6508 U-004-304 .23

REMEDIAL INVESTIGATION REPORT FOR OPERABLE UNIT 2
FINAL - JANUARY 21, 1995 - VOLUME 4 OF 6 -
APPENDICES C & D

01/21/95

DOE-FN EPAS
500
REPORTS

6508

REMEDIAL INVESTIGATION REPORT FOR OPERABLE UNIT 2

FERNALD ENVIRONMENTAL MANAGEMENT PROJECT
FERNALD, OHIO

REMEDIAL INVESTIGATION AND FEASIBILITY STUDY

VOLUME 4 OF 6
APPENDICES C AND D

JANUARY 21, 1995

U.S. DEPARTMENT OF ENERGY
FERNALD FIELD OFFICE

FINAL

000001

REMEDIAL INVESTIGATION AND FEASIBILITY STUDY

FERNALD ENVIRONMENTAL MANAGEMENT PROJECT

REMEDIAL INVESTIGATION REPORT OPERABLE UNIT 2

Volume 4 of 6
Appendices C and D
January 21, 1995

U.S. DEPARTMENT OF ENERGY
FERNALD FIELD OFFICE

Appendix C
Solid Waste Landfill

TABLE OF CONTENTS/LIST OF TABLES AND FIGURES
APPENDIX C - SOLID WASTE LANDFILL

Table	Title	Page
C-1A	Solid Waste Landfill Summary of RI/FS Sample Collection Activities Phase I Field Investigation	C-1-1
C-1B	Solid Waste Landfill Summary of RI/FS Sample Collection Activities Phase II Field Investigation	C-1-7
C-2A	Solid Waste Landfill Concentrations of Detected Analytes Above Background in Surface Soil Phase II Field Investigation	C-2-1
C-2B	Solid Waste Landfill Concentrations of Detected Analytes Above Background in Subsurface Soil Phase I Field Investigation	C-2-8
C-2C	Solid Waste Landfill Concentrations of Detected Analytes Above Background in Subsurface Soil Phase II Field Investigation	C-2-19
C-2D	Solid Waste Landfill Concentrations of Detected Analytes Above Background in Surface Water Phase I Field Investigation	C-2-36
C-2E	Solid Waste Landfill Concentrations of Detected Analytes Above Background in Surface Water Phase II Field Investigation	C-2-38
C-2F	Solid Waste Landfill Concentrations of Detected Analytes Above Background in Sediment Phase I Field Investigation	C-2-40
C-2G	Solid Waste Landfill Concentrations of Detected Analytes Above Background in Sediment Phase II Field Investigation	C-2-41
C-2H	Solid Waste Landfill Concentrations of Detected Analytes Above Background in Groundwater - 1000 Series Phase I Field Investigation	C-2-43
C-2I	Solid Waste Landfill Concentrations of Detected Analytes Above Background in Groundwater - 2000 Series Phase I Field Investigation	C-2-46
C-2J	Solid Waste Landfill Concentrations of Detected Analytes Above Background in Groundwater - 3000 Series Phase I Field Investigation	C-2-50
C-2K	Solid Waste Landfill Concentrations of Detected Analytes Above Background in Groundwater - 1000 Series Phase II Field Investigation	C-2-53
C-2L	Solid Waste Landfill Concentrations of Detected Analytes Above Background in Groundwater - 2000 Series Phase II Field Investigation	C-2-56
C-3A	Solid Waste Landfill RI/FS Surface Soil Results	C-3-1

TABLE OF CONTENTS
(Continued)

Table	Title	Page
C-3B	Solid Waste Landfill Tentatively Identified Compounds Surface Soil	C-3-21
C-4	Solid Waste Landfill CIS Surface Soil Radiological Results	C-4-1
C-5	Solid Waste Landfill Surface Media Environmental Survey	C-5-1
C-6A	Solid Waste Landfill RI/FS Subsurface Soil Results	C-6-1
C-6B	Solid Waste Landfill Tentatively Identified Compounds Subsurface Soil	C-6-119
C-7A	Solid Waste Landfill CIS Subsurface Soil Radiological Results	C-7-1
C-7B	Solid Waste Landfill CIS Subsurface Soil Results, Non-Radiological Data	C-7-3
C-8	Solid Waste Landfill Subsurface Media Analysis Environmental Survey	C-8-1
C-9	Solid Waste Landfill RI/FS Sediment Results	C-9-1
C-10	Solid Waste Landfill CIS Sediment Results	C-10-1
C-11	Solid Waste Landfill RI/FS Surface Water Results	C-11-1
C-12A	Solid Waste Landfill RI/FS Groundwater Results	C-12-1
C-12B	Solid Waste Landfill Tentatively Identified Compounds Water	C-12-113
C-13	Solid Waste Landfill Groundwater Samples - Environmental Survey	C-13-1
C-14	Solid Waste Landfill RI/FS In-Situ Leachate Results	C-14-1
C-15	Solid Waste Landfill RI/FS TCLP	C-15-1
C-16	Solid Waste Landfill CIS RCRA Hazardous Characteristics and EP-Toxicity Results	C-16-1
C-17	Solid Waste Landfill RI/FS Quality Control Results	C-17-1

TABLE OF CONTENTS
(Continued)

Table	Title	Page
C-18	Solid Waste Landfill On-Site Laboratory Screening Results Phase II Field Investigation	C-18-1
C-19A	Solid Waste Landfill FEMP Laboratory Screening Data Results Activity Concentrations of CIS Profile Samples	C-19-1
C-19B	Solid Waste Landfill CIS Surface Soil On-Site Analytical Data	C-19-7
C-19C	Solid Waste Landfill CIS Sediment On-Site Analytical Data	C-19-11
C-19D	Solid Waste Landfill CIS Fidler Surface Readings	C-19-12
C-19E	Solid Waste Landfill CIS Exposure Rate Measurements	C-19-41
C-19F	Solid Waste Landfill CIS Beta Gamma Dose Rate Measurements	C-19-42
C-20A	Solid Waste Landfill Geotechnical Analysis Phase I Field Investigation	C-20-1
C-20B	Solid Waste Landfill Geotechnical Analysis Phase II Field Investigation	C-20-2
C-20C	Solid Waste Landfill Sieve Analysis - ASTM D 422 Phase II Field Investigation	C-20-4
C-20D	Solid Waste Landfill Hydrometer Analysis - ASTM D 422 Phase II Field Investigation	C-20-6
C-20E	Solid Waste Landfill One Dimensional Consolidation - ASTM D 2435 Phase II Field Investigation	C-20-11
C-21A	Solid Waste Landfill CIS Geophysical Analysis Total Magnetic Intensity Readings	C-21-1
C-21B	Solid Waste Landfill CIS Geophysical Analysis EM 31 Readings	C-21-4
C-22	Solid Waste Landfill Boring Logs	C-22-1
C-23	Monitoring Well Installation Records	C-23-1
C-24A	Solid Waste Landfill Groundwater Elevation Data, 1988-1992	C-24-1
C-24B	Solid Waste Landfill Groundwater Elevation Data, 1993	C-24-4

TABLE OF CONTENTS
(Continued)

Figure	Title	Page
C-19A	Solid Waste Landfill CIS Fidler Measurement Contours	C-19-43
C-19B	Solid Waste Landfill CIS Exposure Rate Contours	C-19-44
C-19C	Solid Waste Landfill CIS Beta Gamma Dose Rate Contours	C-19-45
C-20A	Solid Waste Landfill Unconfined Compressive Strength Results - ASTM D 1266 Location 1947	C-20-12
C-20B	Solid Waste Landfill Unconfined Compressive Strength Results - ASTM D 1266 Location 1950	C-20-13
C-20C	Solid Waste Landfill Unconfined Compressive Strength Results - ASTM D 1266 Location 1950	C-20-14
C-20D	Solid Waste Landfill Unconfined Compressive Strength Results - ASTM D 1266 Location 1952	C-20-15
C-21A	Solid Waste Landfill CIS Geophysical Analysis Total Magnetic Intensity Contours	C-21-7
C-21B	Solid Waste Landfill CIS Geophysical Analysis EM 31 Horizontal Dipole Apparent Conductivity Contour Map	C-21-8
C-21C	Solid Waste Landfill CIS Geophysical Analysis EM 31 Vertical Dipole Apparent Conductivity Contour Map	C-21-9
C-21D	Solid Waste Landfill CIS Geophysical Analysis Ground Penetrating Radar Results	C-21-10

KEY TO DATA TABLES

FLTD Filtered Status of the Sample (applies to water samples)

FILT	Filtered sample; filtered status identified on Request for Analysis/Chain of Custody
UNFI	Unfiltered sample; filtered status identified on Request for Analysis/Chain of Custody
*F	Filtered sample; filtered status not identified on Request for Analysis/Chain of Custody; determination based upon other field investigation documentation.
*U	Unfiltered sample; filtered status not identified on Request for Analysis/Chain of Custody; determination based upon other field investigation documentation.
UNKN	Unknown; filtered status could not be determined.

L Analytical Support Level (ASL)

The analytical support level for sample analyses and data validation, defined as follows:

A	*Qualitative Field Analysis* - Analogous to EPA analytical level 1.
B	*Qualitative, Semi-Quantitative, and Quantitative Analyses* - Analogous to EPA analytical level 2.
C	*Quantitative with fully defined QA/QC* - Laboratory analyses generated with full QA/QC checks of types and frequencies specified for ASL D according to FEMP-specified analytical protocols for radiological and nonradiological parameters. The analytical methods are identical to ASL D for QA/QC sample analysis and method performance criteria. However, the data package does not typically contain raw instrument output but does include summaries of QA/QC sample results. Laboratories are required to retain, in the project file, raw instrument data to upgrade ASL C reports to ASL D. Analogous to EPA analytical level 3.
D	*Confirmational with complete QA/QC and reporting* - Provides data generated with a full complement of QA/QC checks of specified types and frequencies according to FEMP-specified analytical protocols for radiological and nonradiological parameters. Analogous to EPA analytical level 4.
E	*Nonstandard* - Analyses by nonstandard protocols that often require method development or validation. Analogous to EPA analytical level 5.
NOTE:	The number 3 is sometimes used to indicate ASL C. Likewise, the numbers 4 and 5 are sometimes used to indicate ASLs D and E, respectively.

VQ Data Validation Qualifier

J	Analyte was analyzed for and positively identified, but the associated numerical value may not be consistent with the amount present in the environmental sample.

KEY TO DATA TABLES
(continued)

VQ Data Validation Qualifier (continued)

N	Analysis indicates that an analyte is present and there are strong indications that the identity is correct.
R	Data are unusable for any purpose. Analyte was analyzed for, but the presence or absence of the analyte was not verified.
U	Analyte was analyzed for and was not present above the level of the associated value. Associated numerical value indicates the approximate concentration necessary to detect the analyte in the sample.
UJ	This is a combination of the U and J qualifiers. Analyte was analyzed for and was not present above the level of the associated value. The associated value may not accurately or precisely represent the concentration necessary to detect the analyte in the sample.
-	No data validation qualifier assigned.

6508

TABLE C-1

TABLE C-1A

SOLID WASTE LANDFILL
SUMMARY OF RI/FS SAMPLE COLLECTION ACTIVITIES
PHASE I FIELD INVESTIGATION
OPERABLE UNIT 2 REMEDIAL INVESTIGATION
FERNALD ENVIRONMENTAL MANAGEMENT PROJECT

Location	Sample No.	Date Collected	Radionuclides	Herbicide Organics	Dioxins/ Furans	Pest/ PCB[a]	VOC[b]	SVOC[c]	General Chem.	Metals	EP Toxicity	TCLP[d]
SURFACE WATER												
ASIT-021	001160	2/21/89	X[e]	-[f]	-	-	-	-	-	-	-	-
	001161		X	-	-	X	X	X	X	X	-	-
GROUNDWATER SAMPLES												
1035	003245	5/25/88	X	-	-	-	-	-	X	X	-	-
	003560	8/11/88	X	-	-	-	-	-	X	X	-	-
	003736	11/15/88	X	-	-	-	-	-	X	X	-	-
	003931	2/5/89	X	-	-	-	-	-	X	X	-	-
	066826	1/6/90	X	-	-	-	-	-	-	-	-	-
1038	003183	5/11/88	X	-	-	-	-	-	X	X	-	-
	003518	8/22/88	X	-	-	-	-	-	X	X	-	-
	003762	11/20/88	X	-	-	-	-	-	X	X	-	-
	003947	2/5/89	X	-	-	-	-	-	X	X	-	-
	066431	6/18/89	X	-	-	-	X	-	X	X	-	-
	066495	8/13/89	X	-	-	-	X	-	X	X	-	-
	066666	11/21/89	X	-	-	-	-	-	-	-	-	-
1719	047006	6/9/92	Total Uranium only	-	-	-	X	-	X	X	-	-
2027	003168	5/9/88	X	-	-	X	X	X	X	X	-	-
	003453	8/10/88	X	-	-	-	-	-	X	X	-	-
	003454 (duplicate of 003453)	8/10/88	X	-	-	-	-	-	X	X	-	-
	003731	12/1/88	X	-	-	-	-	-	X	X	-	-
	003941	3/8/89	X	-	-	-	-	-	X	X	-	-

See footnotes at end of table

FER\CRU2RI\JLG\TABC-1A\January 5, 1995 4:44pm

000008

6508

TABLE C-1A
(Continued)

Location	Sample No.	Date Collected	Radionuclides	Herbicide Organics	Dioxins/ Furans	Pest/ PCB[a]	VOC[b]	SVOC[c]	General Chem.	Metals	EP Toxicity	TCLP[d]
GROUNDWATER SAMPLES (Continued)												
2027 (continued)	066447	6/27/89	X	-	-	-	X	-	X	X	-	-
	066580	9/10/89	X	-	-	-	-	-	X	-	-	-
	066581 (duplicate of 006580)	9/10/89	X	-	-	-	-	-	X	-	-	-
	066599	9/10/89	-	X	-	X	X	X	sulfide only	X	-	-
	066600 (duplicate of 066599)	9/10/89	-	X	-	X	X	X	sulfide only	X	-	-
	066708	11/16/89	X	-	-	-	-	-	-	-	-	-
	066742 (duplicate of 066708)	11/16/89	X	-	-	-	-	-	-	-	-	-
2037	003248	6/1/88	X	-	X	X	X	X	X	X	-	-
	003249 (duplicate of 003248)	6/1/88	X	-	X	X	X	X	X	X	-	-
	003448	8/8/88	X	-	-	-	-	-	X	X	-	-
	003718	11/18/88	X	-	-	-	-	-	X	X	-	-
	003917	2/22/89	X	-	-	-	-	-	X	X	-	-
	066461	6/28/89	X	-	-	-	X	-	X	X	-	-
	066540	8/25/89	X	-	-	-	-	-	X	-	-	-
	066570	8/25/89	-	X	X	X	X	X	sulfide only	X	-	-
	066710	11/19/89	X	-	-	-	-	-	-	-	-	-
2052	003587	9/13/88	X	-	X	X	X	X	X	X	-	-
	003476 (duplicate of 003791)	12/16/88	X	-	-	-	-	-	X	X	-	-
	003791	12/16/88	X	-	-	-	-	-	X	X	-	-
	003892	2/8/89	X	-	-	-	-	-	X	X	-	-
	066847	1/4/90	X	-	-	-	-	-	-	-	-	-
3037	003152	5/5/88	X	-	-	-	-	-	X	X	-	-
	003447	8/8/88	X	-	-	-	-	-	X	X	-	-
	003717	11/18/88	X	-	-	-	-	-	X	X	-	-
	003916	2/22/89	X	-	-	-	-	-	X	X	-	-

See footnotes at end of table

TABLE C-1A
(Continued)

Location	Sample No.	Date Collected	Radionuclides	Herbicide Organics	Dioxins/ Furans	Pest/ PCB[a]	VOC[b]	SVOC[c]	General Chem.	Metals	EP Toxicity	TCLP[d]
GROUNDWATER SAMPLES (Continued)												
3037 (continued)	066462	6/28/89	X	-	-	-	X	-	X	X	-	-
	066541	8/25/89	X	-	-	-	-	-	X	-	-	-
	066571	8/25/89	-	X	X	X	X	X	sulfide only	X	-	-
	066712	11/19/89	X	-	-	-	-	-	-	-	-	-
	066928	8/27/90	-	-	-	-	X	X	-	-	-	-
IN-SITU LEACHATE SAMPLES												
Trench 1	039151	7/7/92	X	X	X	X	X	X	X	X	-	-
Trench 2	039160	7/15/92	X	X	X	X	X	X	X	X	-	-
	039163	7/16/92	X	X	X	X	X	X	X	X	-	-
	039165	7/16/92	-	-	-	X	-	X	-	-	-	-
Trench 3	039155	7/13/92	X	X	X	X	X	X	X	X	-	-

Location	Sample No.	Sample Interval (ft)[g]	Radionuclides	Herbicide Organics	Dioxins/ Furans	Pest/ PCB[a]	VOC[b]	SVOC[c]	General Chem.	Metals	EP Toxicity	TCLP[d]
SEDIMENT SAMPLES												
ASIT-021	009100	0-0.5	Total Uranium, Radium-226, Radium-228, Gross Alpha/ Beta only	-	-	-	-	-	-	-	-	-
SUBSURFACE SAMPLES												
1035	008388	21.0-22.5	X	-	-	-	-	-	-	-	-	-
1718	067266	1.5-3.0	X	-	-	-	-	-	-	-	-	-
	067267	3.0-4.5	-	-	X	-	-	-	-	-	-	-
	067271	7.5-9.0	-	-	X	-	-	-	-	-	-	-

See footnotes at end of table

FER\CRU2RI\ULG\TABC-1A\January 5, 1995 4:44pm

TABLE C-1A
(Continued)

Location	Sample No.	Sample Interval (ft)[g]	Radionuclides	Herbicide Organics	Dioxins/ Furans	Pest/ PCB[a]	VOC[b]	SVOC[c]	General Chem.	Metals	EP Toxicity	TCLP[d]
SUBSURFACE SAMPLES (Continued)												
1718 (continued)	067275	9.0-10.5	X	-	-	-	-	-	-	-	-	-
	067278	13.5-15.0	-	-	X	-	-	-	-	-	-	-
	067279	15.0-16.5	X	-	-	-	-	-	-	-	-	-
1719	067286	1.5-3.0	X	-	-	-	-	-	-	-	-	-
	067287	3.0-4.5	-	-	X	X	X	X	sulfide only	X	-	-
	067292	10.5-12.0	X	-	-	-	-	-	-	-	-	-
	067295	15.0-16.5	-	X	X	X	X	X	-	X	-	-
	067296	16.5-18.0	X	-	-	-	-	-	-	-	-	-
	067300	18.0-19.5	-	-	X	X	X	X	sulfide only	X	-	-
	067301	composite	-	-	-	-	-	-	-	-	-	X
1720	067306	1.5-3.0	X	-	-	-	-	-	-	-	-	-
	067307	3.0-4.5	-	-	X	X	X	X	-	X	-	-
	067309	6.0-7.5	-	-	-	-	-	-	-	-	-	organics only
	067310	7.5-9.0	X	-	-	-	-	-	-	-	-	-
	067311	7.5-9.0	-	X	X	X	X	X	-	X	-	-
	067312	9.0-10.5	-	-	X	X	X	X	-	X	-	-
	067313	9.0-10.5	X	-	-	-	-	-	-	-	-	-
	067318	composite	-	-	-	-	-	-	-	-	-	X
1721	067230	3.0-4.5	X	-	-	-	-	-	-	-	-	-
	067233	7.5-9.0	X	-	-	-	-	-	-	-	-	-

See footnotes at end of table

TABLE C-1A
(Continued)

Location	Sample No.	Sample Interval (ft)[g]	Radionuclides	Herbicide Organics	Dioxins/ Furans	Pest/ PCB[a]	VOC[b]	SVOC[c]	General Chem.	Metals	EP Toxicity	TCLP[d]
SUBSURFACE SAMPLES (Continued)												
1721 (continued)	067234	9.0-10.5	-	X	X	X	X	X	sulfide only	X	-	-
	067236	12.0-13.5	-	-	-	-	-	-	-	-	X	-
	067237	13.5-15.0	-	-	X	X	X	X	-	X	-	-
	067238	15.0-16.5	X	-	-	-	-	-	-	-	-	-
	067245	composite	-	-	-	-	-	-	-	-	-	X
1722	067250	1.5-3.0	-	-	X	X	X	X	-	X	-	-
	067251	3.0-4.5	X	-	-	-	-	-	-	-	-	-
	067253	6.0-7.5	-	-	-	-	-	-	-	-	X	-
	067256	11.0-12.5	-	-	-	-	-	-	-	-	X	-
	067257	11.0-12.5	X	-	-	-	-	-	-	-	-	-
	067258	12.5-14.0	X	-	-	-	-	-	-	-	-	-
	067259	14.0-16.5	-	-	X	X	X	X	-	X	-	-
	067261	composite	-	-	-	-	-	-	-	-	-	X
1808	067393	1.5-3.0	X	-	-	-	-	-	-	-	-	-
	067394	3.0-4.5	-	-	X	X	X	X	-	X	-	-
	067395	4.5-6.0	-	-	-	-	-	-	TOC only	-	-	-
	067396	7.5-9.0	-	X	X	X	X	X	sulfide only	X	-	-
	067397	9.0-10.5	-	-	-	-	-	-	-	-	-	X
	067398	10.5-12.0	X	-	-	-	-	-	-	-	-	-
	067400	13.5-15.0	X	-	-	-	-	-	-	-	-	-
	067401	15.0-16.5	-	-	X	X	X	X	-	X	-	-

See footnotes at end of table

FER\CRU2RI\JLG\TABC-1A\January 5, 1995 4:44pm

TABLE C-1A
(Continued)

Location	Sample No.	Sample Interval (ft)[g]	Radionuclides	Herbicide Organics	Dioxins/ Furans	Pest/ PCB[a]	VOC[b]	SVOC[c]	General Chem.	Metals	EP Toxicity	TCLP[d]
SUBSURFACE SAMPLES (Continued)												
1808 (continued)	067402	0.0-12.75	-	-	-	-	-	-	-	-	-	X
	067405	10.5-12.0	-	-	-	-	-	-	TOC only	-	-	-
	067406	13.5-15.0	-	-	-	-	-	-	TOC only	-	-	-
1888	067714	0.0-1.5	-	-	X	X	X	X	TOC only	X	-	-
	067717	5.0-6.0	-	X	X	X	X	X	-	X	-	-
	067718	6.0-7.5	X	-	-	-	-	-	TOC only	-	-	-
	067719	6.0-7.5	-	-	-	-	-	-	-	-	-	organics only
1889	067740	15.5-17.5	-	-	X	X	X	X	TOC only	X	-	-
3037	007968	22.5-24.0	X	-	-	-	-	-	-	-	-	-
	008107	45.0-46.5	X	-	-	-	-	-	-	-	-	-
	008117	95.0-96.5	X	-	-	-	-	-	-	-	-	-

[a]Pest/PCB = Pesticide/Polychlorinated Biphenyl
[b]VOC = Volatile Organic Compound
[c]SVOC = Semivolatile Organic Compound
[d]TCLP = Toxicity Characteristic Leaching Procedure
[e]X = Sample analyzed for parameters indicated
[f]Sample not analyzed for this parameter
[g]Sample interval is depth, in feet, below the ground surface.

000013

TABLE C-1B

SOLID WASTE LANDFILL
SUMMARY OF RI/FS SAMPLE COLLECTION ACTIVITIES
PHASE II FIELD INVESTIGATION
OPERABLE UNIT 2 REMEDIAL INVESTIGATION
FERNALD ENVIRONMENTAL MANAGEMENT PROJECT

Monitoring Well or Sample Location	Sample Numbers	Target Analyte List 20.03.05	
		Total Uranium Screening A	Full HSL, Gen. GW Qual., Full Rad. B
SURFACE WATER SAMPLES			
SWL-SW-01	111289		X
	111290	X	
SWL-SW-02	111291		X
	111292	X	
1947[b]	111651	X	
GROUNDWATER SAMPLES			
1035	111552		X
	111553[b]		X[d]
	111554	X	
	111555[b]	X	
1038	111548		X
	111549[b]		X[d]
	111550	X	
	111551[b]	X	
1719		X	X
1947	111650	X	
	120488[b]	X	
1950	115480		X
	115481[b]		X[h]
	115485	X	
1952	115468		X
	115469	X	
	115471[b]		X[h]
1985[b]	111439 (4.0 - 8.0)	X	
2027	111543		X
	111544	X	

See footnotes at end of table

TABLE C-1B
(Continued)

Monitoring Well or Sample Location	Sample Numbers	Target Analyte List 20.03.05	
		Total Uranium Screening A	Full HSL, Gen. GW Qual., Full Rad. B
GROUNDWATER SAMPLES (Continued)			
2037	111540		X
	111541	X	
2052	111546		X
	111547	X	
2947	111572[b] (duplicate of 115473)		X
	111573[b] (duplicate of 115474)	X	
	111574[b] (duplicate of 115475)		X[h]
	115473		X
	115474	X	
	115475[b]		X[h]
2949	111490	X	
	111489		X
	115479[b]		X[h]
2951	111536		X
	111538	X	
	115478[b]		X[h]
2953	115488		X
	115490	X	
11037[b]	115374 (21.0 - 22.0)	X	
11039[b]	115388 (8.0 - 10.0)	X	
11040[b]	115398 (25.0 - 30.0)	X	

See footnotes at end of table

TABLE C-1B
(Continued)

Sample Location	Sample Number	Sample Interval (ft.)	Target Analyte List 20.03.05							
			Screening	Chem/Rad	RCRA/Geotechnical					
			A	C	D	E	F	G	H	J
SEDIMENT SAMPLES										
SWL-SD-01	111328	0.0 - 0.5		X						
	111495[b]		X							
	111496[b]		X							
	111497[b]		X							
	111498[b]		X							
SWL-SD-02	111325	0.0 - 0.5		X						X
	111334				TOC					
	111500				SA,HA					
SURFACE SAMPLES										
SWL-SS-01	111293	0.0 - 0.5		X						
SWL-SS-02	111297	0.0 - 0.5		X						X
	111499				SA,HA,W					
SWL-SS-03	111298	0.0 - 0.5		X						
SWL-SS-04	111300	0.0 - 0.5		X						
SWL-SS-05	111301	0.0 - 0.5		X						
SWL-SS-06	111303	0.0 - 0.5		X						
SWL-SS-07	111304	0.0 - 0.5		X						
SWL-SS-08	111492	0.0 - 0.5		X						
SWL-SS-09	111307	0.0 - 0.5		X						
SWL-SS-10	111309	0.0 - 0.5		X						
SWL-SS-11	111310	0.0 - 0.5		X						
SWL-SS-12	111312	0.0 - 0.5		X						
SUBSURFACE SAMPLES										
1947	111639	6.0 - 8.0						UC		X
	111640	8.0 - 10.0			X[g]					
	111648				TOC					
	111649		X							
	111647[b]	19.0 - 20.5	X							
1950	111682	2.0 - 4.0						UC		X
	111683	4.0 - 6.0			X[g]					
	111684				TOC					

See footnotes at end of table

TABLE C-1B
(Continued)

Sample Location	Sample Number	Sample Interval (ft.)	Target Analyte List 20.03.05							
			Screening	Chem/Rad	RCRA/Geotechnical					
			A	C	D	E	F	G	H	J
SUBSURFACE SAMPLES (Continued)										
1950 (continued)	111685	4.0 - 6.0	X							
	115269	8.0 - 10.0						UC		X
	115270	10.0 - 12.0			X[g]					
	115271				TOC					
	115272		X							
1952	111658	4.0 - 6.0						UC		X
	111659	6.0 - 8.0			X[g]					
	111660				TOC					
	111676		X							
		12.0 - 14.0						UC		X
	111670	14.0 - 16.0			X[g]					
	111671				TOC					
	111677		X							
1982	111484[a]	0.0 - 2.5		X						
	111485[a]				X[g]					
	111486[a]				TOC					
		5.0 - 5.5		X						
	111487	7.0 - 7.5		X						
1983	111476	1.5 - 2.5		X						
	111477	2.5 - 5.0		X						
	111478								X[n]	
	111474	5.0 - 7.0					X			X
		10.0 - 12.0		X	X					
	111480[b]	17.5 - 20.0		X						
	111481[b]				X[g]					
	111482[b]				TOC					
1984	111463	0.0 - 2.5			X[g]					
	111464				TOC					
	111466	2.5 - 5.0		X						
	111462	5.0 - 7.0				X				X

See footnotes at end of table

TABLE C-1B
(Continued)

Sample Location	Sample Number	Sample Interval (ft.)	Target Analyte List 20.03.05							
			Screening	Chem/Rad	RCRA/Geotechnical					
			A	C	D	E	F	G	H	J
SUBSURFACE SAMPLES (Continued)										
1984 (continued)	111467[a]	7.5 - 10.0			X[g]					
	111471[a]				TOC					
	111468[a]	12.5 - 15.0		X						
1985	111441[a]	2.0 - 4.0		X						
	111439[b]	4.0 - 8.0	X							
	111448[a]	15.0 - 17.0		X						
1986	111450[b]	2.5 - 5.0	X							
	111452[a]			X[c]						
	111454[a]								X	
	115417	12.5 - 15.0			TOC					
	111458			X						
	111459				X[g]					
	111461	15.0 - 17.0					X			X
1987	115357	5.0 - 7.5		X						
	115358								X	
	115359	12.0 - 15.0		X						
1988	115350[a]	2.5 - 5.0		X						
	115353[a]	15.0 - 17.5			TOC					
	115354				X[g]					
	115351	17.5 - 20.0		X						
	115355[b]	20.0 - 22.0								X
1989	115362	2.5 - 5.0		X						
	115364	7.5 - 10.0			X[g]					
	115365				TOC					
	115368	10.0 - 12.0				X				X
	115363[a]	12.5 - 15.0		X						
1990	115327	1.0 - 3.0			X[g]					
	115328				TOC					
	115324	3.0 - 5.0								X
	115329	6.0 - 9.0		X						
	115330				X[g]					

See footnotes at end of table

TABLE C-1B
(Continued)

Sample Location	Sample Number	Sample Interval (ft.)	Target Analyte List 20.03.05							
			Screening	Chem/Rad	RCRA/Geotechnical					
			A	C	D	E	F	G	H	J
SUBSURFACE SAMPLES (Continued)										
1990	115331	6.0 - 9.0			TOC					
	115332[a]	9.0 - 10.0			X[g]					
	115333[a]				TOC					
	115334	10.0 - 12.0							X	
	115325					X				X
	115335	17.5 - 20.0		X						
	115336				X[g]					
	115337				TOC					
	115326[a]	20.0 - 22.0				X	X			X
1991	115319[a]	7.5 - 10.0		X						
	115320[a]								X	
	115321	12.5 - 15.0		X						
1992	115348	3.0 - 5.0								X
	115343[a]	7.5 - 10.0		X						
	115344[a]				X[g]					
	115345[a]				TOC					
	115346[a]	17.5 - 20.0		X						
1993	115339[b]	2.5 - 5.0		X						
		10.0 - 10.5		X						
	115340	15.0 - 17.5		X						
2947	111384	60.0 - 78.0	X							
2949	111193	4.0 - 6.0	X							
	111194				X[g]					
		6.0 - 8.0						UC		X
		12.0 - 14.0						UC		X
	111206	14.0 - 16.0	X							
	111207				X[g]					
2951	111432[b]	0.0 - 5.0		X[m]					X[n]	
	111433[b]		X							
	111431	60.0 - 78.0	X							

See footnotes at end of table

TABLE C-1B
(Continued)

Sample Location	Sample Number	Sample Interval (ft.)	Target Analyte List 20.03.05							
			Screening	Chem/Rad	RCRA/Geotechnical					
			A	C	D	E	F	G	H	J
SUBSURFACE SAMPLES (Continued)										
2953	115460	60.0 - 75.0	X							
11036[b]	115380	17.0 - 19.0		X						
	115381	2.5 - 5.0		X						
11037[b]	115371	5.0 - 7.5		X						
	115372	17.5 - 20.0		X						
11038[b]	115376	0.0 - 2.5		X						
	115377	12.5 - 15.0		X						
11039[b]	115384	2.5 - 5.0		X						
	115385	12.0 - 14.0		X						
11040[b]	115392	2.5 - 5.0		X						
	115393	12.5 - 15.0		X						
11041[b]	115389	0.0 - 2.5		X						
	115390	12.5 - 15.0		X						

See footnotes at end of table

TABLE C-1B
(Continued)

TARGET ANALYTE LIST DETAILS:

[A] Water/Soil - Total Uranium

[B] Water - Full Hazardous Substance List (HSL), Full Rad., General Groundwater Quality Parameters

[C] Soil/Sediment/Sludge/Waste - Full HSL, Full Rad.

[D] Classification Tests
SG=Specific Gravity
W=Water Content
LL=Liquid Limit
PL=Plastic Limit
Grain Size
SA =Sieve Analysis
HA=Hydrometer Analysis
Other
TOC=Total Organic Carbon

[E] CON=Consolidation Test

[F] HC=Hydraulic Conductivity

[G] Strength Tests
UC=Unconfined Compression
CIU=Consolidated Isotropic Undrained Triaxial

[H] Toxicity Characteristic Leaching Procedure (TCLP)

[J] Dry Unit Weight

NOTE: X = Sample analyzed for parameters indicated, except where shaded.

The shaded areas represent samples or analyses that were specified in the Sampling and Analysis Plan (SAP) but were not collected or performed. These differences may be due to field conditions (e.g., dry well) or laboratory variances (e.g., missed holding time).

[a]Substitute samples for samples specified in the SAP

[b]Additional samples not specified in the SAP

[c]TAL B or C without Rad.

[d]TAL B or C with Full Rad., metals, and cyanide only

[e]TAL B or C with Full Rad. only

[f]TAL B or C without volatile organic compounds (VOCs)

[g]TAL B or D without total organic carbon (TOC)

[h]Unfiltered metals and Full Rad. only

[i]Total uranium, thorium, and radium

[j]VOCs, semivolatile organic coumpounds (SVOCs), polychlorinated biphenyls (PCBs), and pesticides only

[k]SVOCs, PCBs, and pesticides only

[l]Full Rad., VOCs, metals, and cyanide only

[m]VOCs only

[n]Metals only

[o]Total uranium, total thorium, isotopic uranium, and isotopic thorium

[p]PCBs and pesticides only

TABLE C-2

TABLE C-2A

SOLID WASTE LANDFILL
CONCENTRATIONS OF DETECTED ANALYTES
ABOVE BACKGROUND IN SURFACE SOIL
PHASE II FIELD INVESTIGATION
OPERABLE UNIT 2 REMEDIAL INVESTIGATION
FERNALD ENVIRONMENTAL MANAGEMENT PROJECT

SAMPLE LOCATION	SAMPLE ID	SAMPLE INTERVALS	SAMPLE DATE	PARAMETER	RESULTS	VAL QUAL	BACKGROUND	UNITS
METALS								
SWL-SS-01	111293	0 - .5	01-APR-93	Calcium	69100.000	J	5296.781	mg/kg
SWL-SS-01	111293	0 - .5	01-APR-93	Magnesium	22400.000	-	1460	mg/kg
SWL-SS-01	111293	0 - .5	01-APR-93	Silver	4.300	-	0	mg/kg
SWL-SS-01	111293	0 - .5	01-APR-93	Sodium	117.000	-	55.145	mg/kg
SWL-SS-01	111293	0 - .5	01-APR-93	Zinc	83.400	J	58.5	mg/kg
SWL-SS-02	111297	0 - .5	01-APR-93	Calcium	36100.000	J	5296.781	mg/kg
SWL-SS-02	111297	0 - .5	01-APR-93	Magnesium	9660.000	-	1460	mg/kg
SWL-SS-02	111297	0 - .5	01-APR-93	Sodium	91.600	-	55.145	mg/kg
SWL-SS-02	111297	0 - .5	01-APR-93	Silver	5.100	-	0	mg/kg
SWL-SS-02	111297	0 - .5	01-APR-93	Molybdenum	5.300	J	0	mg/kg
SWL-SS-03	111298	0 - .5	01-APR-93	Calcium	112000.000	J	5296.781	mg/kg
SWL-SS-03	111298	0 - .5	01-APR-93	Copper	30.700	-	15.7	mg/kg
SWL-SS-03	111298	0 - .5	01-APR-93	Magnesium	37900.000	-	1460	mg/kg
SWL-SS-03	111298	0 - .5	01-APR-93	Molybdenum	4.400	J	0	mg/kg
SWL-SS-03	111298	0 - .5	01-APR-93	Sodium	206.000	-	55.145	mg/kg
SWL-SS-03	111298	0 - .5	01-APR-93	Silver	4.100	-	0	mg/kg
SWL-SS-04	111300	0 - .5	01-APR-93	Aluminum	13800.000	J	13125.282	mg/kg
SWL-SS-04	111300	0 - .5	01-APR-93	Copper	19.900	-	15.7	mg/kg
SWL-SS-04	111300	0 - .5	01-APR-93	Beryllium	.720	-	.6	mg/kg
SWL-SS-04	111300	0 - .5	01-APR-93	Molybdenum	7.300	J	0	mg/kg
SWL-SS-04	111300	0 - .5	01-APR-93	Vanadium	34.900	-	33.693	mg/kg
SWL-SS-04	111300	0 - .5	01-APR-93	Sodium	149.000	-	55.145	mg/kg
SWL-SS-04	111300	0 - .5	01-APR-93	Silver	7.000	-	0	mg/kg
SWL-SS-04	111300	0 - .5	01-APR-93	Potassium	1700.000	-	1349.53	mg/kg
SWL-SS-04	111300	0 - .5	01-APR-93	Magnesium	18800.000	-	1460	mg/kg
SWL-SS-04	111300	0 - .5	01-APR-93	Calcium	71900.000	J	5296.781	mg/kg
SWL-SS-05	111301	0 - .5	01-APR-93	Barium	95.700	-	88.5	mg/kg
SWL-SS-05	111301	0 - .5	01-APR-93	Calcium	66600.000	J	5296.781	mg/kg
SWL-SS-05	111301	0 - .5	01-APR-93	Sodium	118.000	-	55.145	mg/kg
SWL-SS-05	111301	0 - .5	01-APR-93	Silver	5.500	-	0	mg/kg
SWL-SS-05	111301	0 - .5	01-APR-93	Potassium	1490.000	-	1349.53	mg/kg
SWL-SS-05	111301	0 - .5	01-APR-93	Molybdenum	6.100	J	0	mg/kg
SWL-SS-05	111301	0 - .5	01-APR-93	Magnesium	18200.000	-	1460	mg/kg
SWL-SS-05	111301	0 - .5	01-APR-93	Copper	57.600	-	15.7	mg/kg
SWL-SS-06	111303	0 - .5	01-APR-93	Calcium	64800.000	J	5296.781	mg/kg

TABLE C-2A
(Continued)

SAMPLE LOCATION	SAMPLE ID	SAMPLE INTERVALS	SAMPLE DATE	PARAMETER	RESULTS	VAL QUAL	BACKGROUND	UNITS
METALS (Continued)								
SWL-SS-06	111303	0 - .5	01-APR-93	Sodium	133.000	-	55.145	mg/kg
SWL-SS-06	111303	0 - .5	01-APR-93	Silver	4.700	-	0	mg/kg
SWL-SS-06	111303	0 - .5	01-APR-93	Potassium	1740.000	-	1349.53	mg/kg
SWL-SS-06	111303	0 - .5	01-APR-93	Molybdenum	5.300	J	0	mg/kg
SWL-SS-06	111303	0 - .5	01-APR-93	Magnesium	32800.000	-	1460	mg/kg
SWL-SS-07	111304	0 - .5	02-APR-93	Calcium	77000.000	J	5296.781	mg/kg
SWL-SS-07	111304	0 - .5	02-APR-93	Magnesium	20800.000	-	1460	mg/kg
SWL-SS-07	111304	0 - .5	02-APR-93	Sodium	113.000	-	55.145	mg/kg
SWL-SS-07	111304	0 - .5	02-APR-93	Silver	3.100	-	0	mg/kg
SWL-SS-08	111492	0 - .5	19-APR-93	Barium	98.700	-	88.5	mg/kg
SWL-SS-08	111492	0 - .5	19-APR-93	Magnesium	21100.000	-	1460	mg/kg
SWL-SS-08	111492	0 - .5	19-APR-93	Copper	32.200	-	15.7	mg/kg
SWL-SS-08	111492	0 - .5	19-APR-93	Calcium	79400.000	-	5296.781	mg/kg
SWL-SS-08	111492	0 - .5	19-APR-93	Zinc	80.500	-	58.5	mg/kg
SWL-SS-08	111492	0 - .5	19-APR-93	Sodium	143.000	-	55.145	mg/kg
SWL-SS-08	111492	0 - .5	19-APR-93	Silver	4.300	-	0	mg/kg
SWL-SS-08	111492	0 - .5	19-APR-93	Molybdenum	4.900	-	0	mg/kg
SWL-SS-09	111307	0 - .5	02-APR-93	Aluminum	15900.000	J	13125.282	mg/kg
SWL-SS-09	111307	0 - .5	02-APR-93	Barium	101.000	-	88.5	mg/kg
SWL-SS-09	111307	0 - .5	02-APR-93	Beryllium	.850	-	.6	mg/kg
SWL-SS-09	111307	0 - .5	02-APR-93	Vanadium	42.600	-	33.693	mg/kg
SWL-SS-09	111307	0 - .5	02-APR-93	Sodium	86.300	-	55.145	mg/kg
SWL-SS-09	111307	0 - .5	02-APR-93	Silver	7.100	-	0	mg/kg
SWL-SS-09	111307	0 - .5	02-APR-93	Potassium	1750.000	-	1349.53	mg/kg
SWL-SS-09	111307	0 - .5	02-APR-93	Molybdenum	6.400	J	0	mg/kg
SWL-SS-09	111307	0 - .5	02-APR-93	Magnesium	7120.000	-	1460	mg/kg
SWL-SS-09	111307	0 - .5	02-APR-93	Lead	33.300	-	29.575	mg/kg
SWL-SS-09	111307	0 - .5	02-APR-93	Copper	18.700	-	15.7	mg/kg
SWL-SS-09	111307	0 - .5	02-APR-93	Chromium	18.900	-	17.057	mg/kg
SWL-SS-09	111307	0 - .5	02-APR-93	Calcium	21600.000	J	5296.781	mg/kg
SWL-SS-10	111309	0 - .5	02-APR-93	Aluminum	18400.000	J	13125.282	mg/kg
SWL-SS-10	111309	0 - .5	02-APR-93	Barium	96.700	-	88.5	mg/kg
SWL-SS-10	111309	0 - .5	02-APR-93	Chromium	19.900	-	17.057	mg/kg
SWL-SS-10	111309	0 - .5	02-APR-93	Calcium	6970.000	J	5296.781	mg/kg
SWL-SS-10	111309	0 - .5	02-APR-93	Beryllium	.970	-	.6	mg/kg
SWL-SS-10	111309	0 - .5	02-APR-93	Vanadium	46.000	-	33.693	mg/kg
SWL-SS-10	111309	0 - .5	02-APR-93	Sodium	67.900	-	55.145	mg/kg
SWL-SS-10	111309	0 - .5	02-APR-93	Silver	7.400	-	0	mg/kg
SWL-SS-10	111309	0 - .5	02-APR-93	Potassium	1800.000	-	1349.53	mg/kg
SWL-SS-10	111309	0 - .5	02-APR-93	Molybdenum	6.400	J	0	mg/kg
SWL-SS-10	111309	0 - .5	02-APR-93	Magnesium	4330.000	-	1460	mg/kg
SWL-SS-10	111309	0 - .5	02-APR-93	Copper	18.600	-	15.7	mg/kg
SWL-SS-11	111310	0 - .5	02-APR-93	Calcium	81200.000	J	5296.781	mg/kg

TABLE C-2A
(Continued)

SAMPLE LOCATION	SAMPLE ID	SAMPLE INTERVALS	SAMPLE DATE	PARAMETER	RESULTS	VAL QUAL	BACKGROUND	UNITS
METALS (Continued)								
SWL-SS-11	111310	0 - .5	02-APR-93	Molybdenum	4.600	J	0	mg/kg
SWL-SS-11	111310	0 - .5	02-APR-93	Magnesium	29800.000	-	1460	mg/kg
SWL-SS-11	111310	0 - .5	02-APR-93	Sodium	137.000	-	55.145	mg/kg
SWL-SS-11	111310	0 - .5	02-APR-93	Silver	4.400	-	0	mg/kg
SWL-SS-12	111312	0 - .5	02-APR-93	Beryllium	.630	-	.6	mg/kg
SWL-SS-12	111312	0 - .5	02-APR-93	Molybdenum	5.000	J	0	mg/kg
SWL-SS-12	111312	0 - .5	02-APR-93	Sodium	65.600	-	55.145	mg/kg
SWL-SS-12	111312	0 - .5	02-APR-93	Silver	4.900	-	0	mg/kg
SWL-SS-12	111312	0 - .5	02-APR-93	Magnesium	8280.000	-	1460	mg/kg
SWL-SS-12	111312	0 - .5	02-APR-93	Cadmium	.850	-	.77	mg/kg
SWL-SS-12	111312	0 - .5	02-APR-93	Calcium	25500.000	J	5296.781	mg/kg
RADIONUCLIDES								
SWL-SS-01	111293	0 - .5	01-APR-93	SR-90	.580	J	0	pCi/g
SWL-SS-01	111293	0 - .5	01-APR-93	TH-230	2.210	-	2.112	pCi/g
SWL-SS-01	111293	0 - .5	01-APR-93	U-234	5.940	-	1.319	pCi/g
SWL-SS-01	111293	0 - .5	01-APR-93	U-TOTAL	39.800	-	3.24	mg/kg
SWL-SS-01	111293	0 - .5	01-APR-93	U-238	13.600	-	1.27	pCi/g
SWL-SS-01	111293	0 - .5	01-APR-93	U-235/236	.512	J	.181	pCi/g
SWL-SS-02	111297	0 - .5	01-APR-93	NP-237	.115	N	0	pCi/g
SWL-SS-02	111297	0 - .5	01-APR-93	PU-238	.057	J	0	pCi/g
SWL-SS-02	111297	0 - .5	01-APR-93	PU-239/240	.019	J	0	pCi/g
SWL-SS-02	111297	0 - .5	01-APR-93	U-TOTAL	114.000	-	3.24	mg/kg
SWL-SS-02	111297	0 - .5	01-APR-93	U-238	34.600	-	1.27	pCi/g
SWL-SS-02	111297	0 - .5	01-APR-93	U-235/236	.816	-	.181	pCi/g
SWL-SS-02	111297	0 - .5	01-APR-93	U-234	13.500	-	1.319	pCi/g
SWL-SS-02	111297	0 - .5	01-APR-93	TH-230	3.740	-	2.112	pCi/g
SWL-SS-02	111297	0 - .5	01-APR-93	SR-90	1.230	J	0	pCi/g
SWL-SS-03	111298	0 - .5	01-APR-93	NP-237	.147	N	0	pCi/g
SWL-SS-03	111298	0 - .5	01-APR-93	PU-238	.095	J	0	pCi/g
SWL-SS-03	111298	0 - .5	01-APR-93	U-TOTAL	194.000	-	3.24	mg/kg
SWL-SS-03	111298	0 - .5	01-APR-93	U-238	63.800	-	1.27	pCi/g
SWL-SS-03	111298	0 - .5	01-APR-93	U-235/236	1.920	-	.181	pCi/g
SWL-SS-03	111298	0 - .5	01-APR-93	U-234	33.100	-	1.319	pCi/g
SWL-SS-03	111298	0 - .5	01-APR-93	TH-230	3.240	-	2.112	pCi/g
SWL-SS-03	111298	0 - .5	01-APR-93	RA-228	1.280	-	1.17	pCi/g
SWL-SS-03	111298	0 - .5	01-APR-93	PU-239/240	.085	J	0	pCi/g
SWL-SS-04	111300	0 - .5	01-APR-93	PU-238	.207	J	0	pCi/g
SWL-SS-04	111300	0 - .5	01-APR-93	TH-232	2.500	-	1.469	pCi/g
SWL-SS-04	111300	0 - .5	01-APR-93	U-TOTAL	90.800	-	3.24	mg/kg
SWL-SS-04	111300	0 - .5	01-APR-93	U-238	29.000	-	1.27	pCi/g
SWL-SS-04	111300	0 - .5	01-APR-93	U-235/236	1.260	-	.181	pCi/g
SWL-SS-04	111300	0 - .5	01-APR-93	U-234	22.200	-	1.319	pCi/g
SWL-SS-04	111300	0 - .5	01-APR-93	TH-TOTAL	22.800	-	10.7	mg/kg

TABLE C-2A
(Continued)

SAMPLE LOCATION	SAMPLE ID	SAMPLE INTERVALS	SAMPLE DATE	PARAMETER	RESULTS	VAL QUAL	BACKGROUND	UNITS
RADIONUCLIDES (Continued)								
SWL-SS-04	111300	0 - .5	01-APR-93	TH-230	2.140	-	2.112	pCi/g
SWL-SS-04	111300	0 - .5	01-APR-93	TH-228	2.330	-	1.519	pCi/g
SWL-SS-04	111300	0 - .5	01-APR-93	SR-90	1.090	J	0	pCi/g
SWL-SS-04	111300	0 - .5	01-APR-93	RA-228	2.990	-	1.17	pCi/g
SWL-SS-05	111301	0 - .5	01-APR-93	NP-237	.194	N	0	pCi/g
SWL-SS-05	111301	0 - .5	01-APR-93	U-TOTAL	143.000	-	3.24	mg/kg
SWL-SS-05	111301	0 - .5	01-APR-93	U-238	49.400	-	1.27	pCi/g
SWL-SS-05	111301	0 - .5	01-APR-93	U-235/236	3.330	-	.181	pCi/g
SWL-SS-05	111301	0 - .5	01-APR-93	U-234	48.900	-	1.319	pCi/g
SWL-SS-05	111301	0 - .5	01-APR-93	TH-TOTAL	11.400	-	10.7	mg/kg
SWL-SS-05	111301	0 - .5	01-APR-93	RA-226	1.590	-	1.528	pCi/g
SWL-SS-05	111301	0 - .5	01-APR-93	RA-228	1.300	-	1.17	pCi/g
SWL-SS-05	111301	0 - .5	01-APR-93	PU-239/240	.126	J	0	pCi/g
SWL-SS-05	111301	0 - .5	01-APR-93	TH-230	9.610	-	2.112	pCi/g
SWL-SS-05	111301	0 - .5	01-APR-93	PU-238	.072	J	0	pCi/g
SWL-SS-06	111303	0 - .5	01-APR-93	PU-238	.049	J	0	pCi/g
SWL-SS-06	111303	0 - .5	01-APR-93	U-238	2.430	-	1.27	pCi/g
SWL-SS-06	111303	0 - .5	01-APR-93	U-TOTAL	9.770	J	3.24	mg/kg
SWL-SS-06	111303	0 - .5	01-APR-93	U-234	1.830	-	1.319	pCi/g
SWL-SS-06	111303	0 - .5	01-APR-93	SR-90	.789	J	0	pCi/g
SWL-SS-07	111304	0 - .5	02-APR-93	NP-237	.046	N	0	pCi/g
SWL-SS-07	111304	0 - .5	02-APR-93	U-TOTAL	6.860	J	3.24	mg/kg
SWL-SS-07	111304	0 - .5	02-APR-93	U-238	2.340	-	1.27	pCi/g
SWL-SS-07	111304	0 - .5	02-APR-93	U-234	1.430	-	1.319	pCi/g
SWL-SS-07	111304	0 - .5	02-APR-93	SR-90	1.050	J	0	pCi/g
SWL-SS-07	111304	0 - .5	02-APR-93	PU-238	.023	J	0	pCi/g
SWL-SS-08	111492	0 - .5	19-APR-93	NP-237	.075	N	0	pCi/g
SWL-SS-08	111492	0 - .5	19-APR-93	PU-238	.902	J	0	pCi/g
SWL-SS-08	111492	0 - .5	19-APR-93	U-TOTAL	97.000	-	3.24	mg/kg
SWL-SS-08	111492	0 - .5	19-APR-93	U-238	26.900	-	1.27	pCi/g
SWL-SS-08	111492	0 - .5	19-APR-93	U-235/236	.809	-	.181	pCi/g
SWL-SS-08	111492	0 - .5	19-APR-93	PU-239/240	.113	J	0	pCi/g
SWL-SS-08	111492	0 - .5	19-APR-93	RA-228	1.450	-	1.17	pCi/g
SWL-SS-08	111492	0 - .5	19-APR-93	TH-230	3.130	J	2.112	pCi/g
SWL-SS-08	111492	0 - .5	19-APR-93	U-234	12.400	-	1.319	pCi/g
SWL-SS-09	111307	0 - .5	02-APR-93	NP-237	.064	N	0	pCi/g
SWL-SS-09	111307	0 - .5	02-APR-93	U-TOTAL	27.500	J	3.24	mg/kg
SWL-SS-09	111307	0 - .5	02-APR-93	U-238	8.210	-	1.27	pCi/g
SWL-SS-09	111307	0 - .5	02-APR-93	U-235/236	.398	J	.181	pCi/g
SWL-SS-09	111307	0 - .5	02-APR-93	PU-238	.019	J	0	pCi/g
SWL-SS-09	111307	0 - .5	02-APR-93	RA-226	2.260	-	1.528	pCi/g
SWL-SS-09	111307	0 - .5	02-APR-93	TH-230	3.880	-	2.112	pCi/g
SWL-SS-09	111307	0 - .5	02-APR-93	U-234	6.700	-	1.319	pCi/g
SWL-SS-09	111307	0 - .5	02-APR-93	SR-90	1.440	J	0	pCi/g

6508

TABLE C-2A
(Continued)

SAMPLE LOCATION	SAMPLE ID	SAMPLE INTERVALS	SAMPLE DATE	PARAMETER	RESULTS	VAL QUAL	BACKGROUND	UNITS
RADIONUCLIDES (Continued)								
SWL-SS-09	111307	0 - .5	02-APR-93	PU-239/240	.032	J	0	pCi/g
SWL-SS-10	111309	0 - .5	02-APR-93	NP-237	.046	N	0	pCi/g
SWL-SS-10	111309	0 - .5	02-APR-93	U-TOTAL	10.500	J	3.24	mg/kg
SWL-SS-10	111309	0 - .5	02-APR-93	U-238	2.900	-	1.27	pCi/g
SWL-SS-10	111309	0 - .5	02-APR-93	U-234	2.280	-	1.319	pCi/g
SWL-SS-10	111309	0 - .5	02-APR-93	SR-90	.527	J	0	pCi/g
SWL-SS-10	111309	0 - .5	02-APR-93	RA-228	1.210	-	1.17	pCi/g
SWL-SS-10	111309	0 - .5	02-APR-93	PU-239/240	.026	J	0	pCi/g
SWL-SS-10	111309	0 - .5	02-APR-93	PU-238	.097	J	0	pCi/g
SWL-SS-11	111310	0 - .5	02-APR-93	PU-239/240	.023	J	0	pCi/g
SWL-SS-11	111310	0 - .5	02-APR-93	U-235/236	.288	-	.181	pCi/g
SWL-SS-11	111310	0 - .5	02-APR-93	U-TOTAL	19.500	J	3.24	mg/kg
SWL-SS-11	111310	0 - .5	02-APR-93	U-238	6.680	-	1.27	pCi/g
SWL-SS-11	111310	0 - .5	02-APR-93	U-234	4.970	-	1.319	pCi/g
SWL-SS-12	111312	0 - .5	02-APR-93	NP-237	3.110	N	0	pCi/g
SWL-SS-12	111312	0 - .5	02-APR-93	U-TOTAL	18.700	-	3.24	mg/kg
SWL-SS-12	111312	0 - .5	02-APR-93	U-238	5.580	-	1.27	pCi/g
SWL-SS-12	111312	0 - .5	02-APR-93	U-234	5.460	-	1.319	pCi/g
SWL-SS-12	111312	0 - .5	02-APR-93	SR-90	1.070	J	0	pCi/g
SWL-SS-12	111312	0 - .5	02-APR-93	PU-238	.333	J	0	pCi/g
SWL-SS-12	111312	0 - .5	02-APR-93	U-235/236	.346	J	.181	pCi/g
SWL-SS-12	111312	0 - .5	02-APR-93	RA-228	2.070	-	1.17	pCi/g
VOLATILE ORGANICS								
SWL-SS-01	111293	0 - .5	01-APR-93	2-Butanone	1.000	J	0	ug/kg
SWL-SS-01	111293	0 - .5	01-APR-93	Acetone	1.000	J	0	ug/kg
SWL-SS-02	111297	0 - .5	01-APR-93	Acetone	2.000	J	0	ug/kg
SWL-SS-03	111298	0 - .5	01-APR-93	Bromomethane	2.000	J	0	ug/kg
SWL-SS-03	111298	0 - .5	01-APR-93	Chloromethane	2.000	J	0	ug/kg
SWL-SS-10	111309	0 - .5	02-APR-93	Acetone	3.000	J	0	ug/kg
SWL-SS-11	111310	0 - .5	02-APR-93	Acetone	5.000	J	0	ug/kg
SEMIVOLATILE ORGANICS								
SWL-SS-01	111293	0 - .5	01-APR-93	Acenaphthene	120.000	J	0	ug/kg
SWL-SS-01	111293	0 - .5	01-APR-93	Benzo(a)pyrene	760.000	J	0	ug/kg
SWL-SS-01	111293	0 - .5	01-APR-93	Benzo(b)fluoranthene	710.000	J	0	ug/kg
SWL-SS-01	111293	0 - .5	01-APR-93	Benzo(g,h,i)perylene	500.000	J	0	ug/kg
SWL-SS-01	111293	0 - .5	01-APR-93	Benzo(k)fluoranthene	880.000	J	0	ug/kg
SWL-SS-01	111293	0 - .5	01-APR-93	Pyrene	2100.000	J	0	ug/kg
SWL-SS-01	111293	0 - .5	01-APR-93	Phenanthrene	1500.000	J	0	ug/kg
SWL-SS-01	111293	0 - .5	01-APR-93	Indeno(1,2,3-cd)pyrene	480.000	J	0	ug/kg
SWL-SS-01	111293	0 - .5	01-APR-93	Fluorene	100.000	J	0	ug/kg
SWL-SS-01	111293	0 - .5	01-APR-93	Fluoranthene	1900.000	J	0	ug/kg
SWL-SS-01	111293	0 - .5	01-APR-93	Dibenzofuran	56.000	J	0	ug/kg

TABLE C-2A
(Continued)

SAMPLE LOCATION	SAMPLE ID	SAMPLE INTERVALS	SAMPLE DATE	PARAMETER	RESULTS	VAL QUAL	BACKGROUND	UNITS
SEMIVOLATILE ORGANICS (Continued)								
SWL-SS-01	111293	0 - .5	01-APR-93	Dibenzo(a,h)anthracene	200.000	J	0	ug/kg
SWL-SS-01	111293	0 - .5	01-APR-93	Chrysene	1100.000	J	0	ug/kg
SWL-SS-01	111293	0 - .5	01-APR-93	Carbazole	77.000	J	0	ug/kg
SWL-SS-01	111293	0 - .5	01-APR-93	Anthracene	230.000	J	0	ug/kg
SWL-SS-01	111293	0 - .5	01-APR-93	Benzo(a)anthracene	880.000	J	0	ug/kg
SWL-SS-02	111297	0 - .5	01-APR-93	Chrysene	45.000	J	0	ug/kg
SWL-SS-02	111297	0 - .5	01-APR-93	Pyrene	55.000	J	0	ug/kg
SWL-SS-02	111297	0 - .5	01-APR-93	Fluoranthene	57.000	J	0	ug/kg
SWL-SS-03	111298	0 - .5	01-APR-93	Benzo(a)anthracene	110.000	J	0	ug/kg
SWL-SS-03	111298	0 - .5	01-APR-93	Benzo(g,h,i)perylene	82.000	J	0	ug/kg
SWL-SS-03	111298	0 - .5	01-APR-93	Benzo(k)fluoranthene	150.000	J	0	ug/kg
SWL-SS-03	111298	0 - .5	01-APR-93	Indeno(1,2,3-cd)pyrene	73.000	J	0	ug/kg
SWL-SS-03	111298	0 - .5	01-APR-93	Pyrene	260.000	J	0	ug/kg
SWL-SS-03	111298	0 - .5	01-APR-93	Phenanthrene	150.000	J	0	ug/kg
SWL-SS-03	111298	0 - .5	01-APR-93	Fluoranthene	260.000	J	0	ug/kg
SWL-SS-03	111298	0 - .5	01-APR-93	Chrysene	150.000	J	0	ug/kg
SWL-SS-03	111298	0 - .5	01-APR-93	Benzo(b)fluoranthene	96.000	J	0	ug/kg
SWL-SS-03	111298	0 - .5	01-APR-93	Benzo(a)pyrene	110.000	J	0	ug/kg
SWL-SS-04	111300	0 - .5	01-APR-93	Benzo(a)anthracene	140.000	J	0	ug/kg
SWL-SS-04	111300	0 - .5	01-APR-93	Indeno(1,2,3-cd)pyrene	91.000	J	0	ug/kg
SWL-SS-04	111300	0 - .5	01-APR-93	Fluoranthene	300.000	J	0	ug/kg
SWL-SS-04	111300	0 - .5	01-APR-93	Di-n-butyl phthalate	55.000	J	0	ug/kg
SWL-SS-04	111300	0 - .5	01-APR-93	Chrysene	180.000	J	0	ug/kg
SWL-SS-04	111300	0 - .5	01-APR-93	Benzo(k)fluoranthene	140.000	J	0	ug/kg
SWL-SS-04	111300	0 - .5	01-APR-93	Benzo(g,h,i)perylene	93.000	J	0	ug/kg
SWL-SS-04	111300	0 - .5	01-APR-93	Benzo(b)fluoranthene	140.000	J	0	ug/kg
SWL-SS-04	111300	0 - .5	01-APR-93	Benzo(a)pyrene	140.000	J	0	ug/kg
SWL-SS-04	111300	0 - .5	01-APR-93	Pyrene	300.000	J	0	ug/kg
SWL-SS-04	111300	0 - .5	01-APR-93	Phenanthrene	150.000	J	0	ug/kg
SWL-SS-05	111301	0 - .5	01-APR-93	Benzo(a)anthracene	55.000	J	0	ug/kg
SWL-SS-05	111301	0 - .5	01-APR-93	Chrysene	77.000	J	0	ug/kg
SWL-SS-05	111301	0 - .5	01-APR-93	Benzo(k)fluoranthene	78.000	J	0	ug/kg
SWL-SS-05	111301	0 - .5	01-APR-93	Benzo(a)pyrene	59.000	J	0	ug/kg
SWL-SS-05	111301	0 - .5	01-APR-93	bis(2-Ethylhexyl) phthalate	48.000	J	0	ug/kg
SWL-SS-05	111301	0 - .5	01-APR-93	Pyrene	130.000	J	0	ug/kg
SWL-SS-05	111301	0 - .5	01-APR-93	Phenanthrene	90.000	J	0	ug/kg
SWL-SS-05	111301	0 - .5	01-APR-93	Fluoranthene	130.000	J	0	ug/kg
SWL-SS-06	111303	0 - .5	01-APR-93	Acenaphthene	49.000	J	0	ug/kg
SWL-SS-06	111303	0 - .5	01-APR-93	Anthracene	120.000	J	0	ug/kg
SWL-SS-06	111303	0 - .5	01-APR-93	Benzo(b)fluoranthene.	150.000	J	0	ug/kg
SWL-SS-06	111303	0 - .5	01-APR-93	bis(2-Ethylhexyl) phthalate	43.000	J	0	ug/kg
SWL-SS-06	111303	0 - .5	01-APR-93	Pyrene	660.000	J	0	ug/kg
SWL-SS-06	111303	0 - .5	01-APR-93	Phenanthrene	470.000	J	0	ug/kg
SWL-SS-06	111303	0 - .5	01-APR-93	Indeno(1,2,3-cd)pyrene	100.000	J	0	ug/kg

TABLE C-2A
(Continued)

SAMPLE LOCATION	SAMPLE ID	SAMPLE INTERVALS	SAMPLE DATE	PARAMETER	RESULTS	VAL QUAL	BACKGROUND	UNITS
SEMIVOLATILE ORGANICS (Continued)								
SWL-SS-06	111303	0 - .5	01-APR-93	Fluorene	56.000	J	0	ug/kg
SWL-SS-06	111303	0 - .5	01-APR-93	Fluoranthene	530.000	J	0	ug/kg
SWL-SS-06	111303	0 - .5	01-APR-93	Dibenzo(a,h)anthracene	56.000	J	0	ug/kg
SWL-SS-06	111303	0 - .5	01-APR-93	Chrysene	250.000	J	0	ug/kg
SWL-SS-06	111303	0 - .5	01-APR-93	Benzo(k)fluoranthene	210.000	J	0	ug/kg
SWL-SS-06	111303	0 - .5	01-APR-93	Benzo(g,h,i)perylene	100.000	J	0	ug/kg
SWL-SS-06	111303	0 - .5	01-APR-93	Benzo(a)pyrene	190.000	J	0	ug/kg
SWL-SS-06	111303	0 - .5	01-APR-93	Benzo(a)anthracene	220.000	J	0	ug/kg
SWL-SS-07	111304	0 - .5	02-APR-93	Benzo(k)fluoranthene	42.000	J	0	ug/kg
SWL-SS-07	111304	0 - .5	02-APR-93	Chrysene	49.000	J	0	ug/kg
SWL-SS-07	111304	0 - .5	02-APR-93	bis(2-Ethylhexyl) phthalate	40.000	J	0	ug/kg
SWL-SS-07	111304	0 - .5	02-APR-93	Pyrene	130.000	J	0	ug/kg
SWL-SS-07	111304	0 - .5	02-APR-93	Phenanthrene	59.000	J	0	ug/kg
SWL-SS-07	111304	0 - .5	02-APR-93	Fluoranthene	85.000	J	0	ug/kg
SWL-SS-08	111492	0 - .5	19-APR-93	Benzo(a)anthracene	79.000	J	0	ug/kg
SWL-SS-08	111492	0 - .5	19-APR-93	Benzo(k)fluoranthene	75.000	J	0	ug/kg
SWL-SS-08	111492	0 - .5	19-APR-93	Benzo(b)fluoranthene	64.000	J	0	ug/kg
SWL-SS-08	111492	0 - .5	19-APR-93	Indeno(1,2,3-cd)pyrene	46.000	J	0	ug/kg
SWL-SS-08	111492	0 - .5	19-APR-93	Pyrene	170.000	J	0	ug/kg
SWL-SS-08	111492	0 - .5	19-APR-93	Phenanthrene	120.000	J	0	ug/kg
SWL-SS-08	111492	0 - .5	19-APR-93	Fluoranthene	200.000	J	0	ug/kg
SWL-SS-08	111492	0 - .5	19-APR-93	Chrysene	94.000	J	0	ug/kg
SWL-SS-08	111492	0 - .5	19-APR-93	Benzo(a)pyrene	67.000	J	0	ug/kg
SWL-SS-09	111307	0 - .5	02-APR-93	Pyrene	49.000	J	0	ug/kg
SWL-SS-11	111310	0 - .5	02-APR-93	bis(2-Ethylhexyl) phthalate	43.000	J	0	ug/kg
PESTICIDES/PCBS								
SWL-SS-06	111303	0 - .5	01-APR-93	4,4'-DDE	12.000	J	0	ug/kg

000028

6508

TABLE C-2B

SOLID WASTE LANDFILL
CONCENTRATIONS OF DETECTED ANALYTES
ABOVE BACKGROUND IN SUBSURFACE SOIL
PHASE I FIELD INVESTIGATION
OPERABLE UNIT 2 REMEDIAL INVESTIGATION
FERNALD ENVIRONMENTAL MANAGEMENT PROJECT

SAMPLE LOCATION	SAMPLE ID	SAMPLE INTERVALS	SAMPLE DATE	PARAMETER	RESULTS	VAL QUAL	BACKGROUND	UNITS
METALS								
1719	067287	3 - 4.5	07-AUG-91	Antimony	4.200	-	0	mg/kg
1719	067287	3 - 4.5	07-AUG-91	Molybdenum	2.900	-	.27	mg/kg
1719	067287	3 - 4.5	07-AUG-91	Silver	3.300	-	0	mg/kg
1719	067295	15 - 16.5	08-AUG-91	Antimony	3.800	-	0	mg/kg
1719	067295	15 - 16.5	08-AUG-91	Molybdenum	3.600	-	.27	mg/kg
1719	067295	15 - 16.5	08-AUG-91	Silver	3.400	-	0	mg/kg
1719	067300	18 - 19.5	08-AUG-91	Antimony	27.300	-	0	mg/kg
1719	067300	18 - 19.5	08-AUG-91	Beryllium	.710	J	.62	mg/kg
1719	067300	18 - 19.5	08-AUG-91	Cadmium	4.000	-	.91	mg/kg
1719	067300	18 - 19.5	08-AUG-91	Chromium	26.900	J	20.953	mg/kg
1719	067300	18 - 19.5	08-AUG-91	Molybdenum	14.500	-	.27	mg/kg
1719	067300	18 - 19.5	08-AUG-91	Silver	15.500	-	0	mg/kg
1720	067307	3 - 4.5	10-AUG-91	Beryllium	.990	-	.62	mg/kg
1720	067307	3 - 4.5	10-AUG-91	Cadmium	.920	J	.91	mg/kg
1720	067307	3 - 4.5	10-AUG-91	Chromium	22.400	-	20.953	mg/kg
1720	067307	3 - 4.5	10-AUG-91	Nickel	36.600	-	34.747	mg/kg
1720	067307	3 - 4.5	10-AUG-91	Silver	4.200	-	0	mg/kg
1720	067307	3 - 4.5	10-AUG-91	Molybdenum	16.000	-	.27	mg/kg
1720	067307	3 - 4.5	10-AUG-91	Copper	24.000	-	20.23	mg/kg
1720	067311	7.5 - 9	10-AUG-91	Antimony	16.400	J	0	mg/kg
1720	067311	7.5 - 9	10-AUG-91	Beryllium	.840	-	.62	mg/kg
1720	067311	7.5 - 9	10-AUG-91	Silver	14.900	-	0	mg/kg
1720	067311	7.5 - 9	10-AUG-91	Molybdenum	14.200	-	.27	mg/kg
1720	067311	7.5 - 9	10-AUG-91	Chromium	25.900	-	20.953	mg/kg
1720	067311	7.5 - 9	10-AUG-91	Cadmium	3.800	J	.91	mg/kg
1720	067312	9 - 10.5	10-AUG-91	Antimony	11.900	J	0	mg/kg
1720	067312	9 - 10.5	10-AUG-91	Arsenic	15.400	-	9.704	mg/kg
1720	067312	9 - 10.5	10-AUG-91	Barium	223.000	-	121.064	mg/kg
1720	067312	9 - 10.5	10-AUG-91	Cobalt	25.800	-	15.929	mg/kg
1720	067312	9 - 10.5	10-AUG-91	Iron	36400.000	-	31188.164	mg/kg
1720	067312	9 - 10.5	10-AUG-91	Manganese	1690.000	-	1045.407	mg/kg
1720	067312	9 - 10.5	10-AUG-91	Silver	4.000	-	0	mg/kg
1720	067312	9 - 10.5	10-AUG-91	Selenium	.540	-	0	mg/kg
1720	067312	9 - 10.5	10-AUG-91	Nickel	42.000	-	34.747	mg/kg

000329

6508

TABLE C-2B
(Continued)

SAMPLE LOCATION	SAMPLE ID	SAMPLE INTERVALS	SAMPLE DATE	PARAMETER	RESULTS	VAL QUAL	BACKGROUND	UNITS
METALS (Continued)								
1720	067312	9 - 10.5	10-AUG-91	Molybdenum	18.800	-	.27	mg/kg
1720	067312	9 - 10.5	10-AUG-91	Copper	29.000	-	20.23	mg/kg
1720	067312	9 - 10.5	10-AUG-91	Chromium	23.400	-	20.953	mg/kg
1720	067312	9 - 10.5	10-AUG-91	Beryllium	.950	-	.62	mg/kg
1721	067234	9 - 10.5	26-JUL-91	Beryllium	.920	J	.62	mg/kg
1721	067234	9 - 10.5	26-JUL-91	Cadmium	1.400	-	.91	mg/kg
1721	067234	9 - 10.5	26-JUL-91	Silicon	1140.000	-	1069.496	mg/kg
1721	067234	9 - 10.5	26-JUL-91	Silver	7.500	-	0	mg/kg
1721	067234	9 - 10.5	26-JUL-91	Molybdenum	11.800	-	.27	mg/kg
1721	067237	13.5 - 15	27-JUL-91	Arsenic	13.800	-	9.704	mg/kg
1721	067237	13.5 - 15	27-JUL-91	Barium	126.000	J	121.064	mg/kg
1721	067237	13.5 - 15	27-JUL-91	Zinc	77.800	-	73.158	mg/kg
1721	067237	13.5 - 15	27-JUL-91	Thallium	.600	-	.49	mg/kg
1721	067237	13.5 - 15	27-JUL-91	Nickel	41.000	J	34.747	mg/kg
1721	067237	13.5 - 15	27-JUL-91	Molybdenum	14.900	-	.27	mg/kg
1721	067237	13.5 - 15	27-JUL-91	Lead	16.700	-	15.78	mg/kg
1721	067237	13.5 - 15	27-JUL-91	Iron	33300.000	J	31188.164	mg/kg
1721	067237	13.5 - 15	27-JUL-91	Copper	28.400	-	20.23	mg/kg
1721	067237	13.5 - 15	27-JUL-91	Cobalt	18.800	-	15.929	mg/kg
1721	067237	13.5 - 15	27-JUL-91	Chromium	21.900	J	20.953	mg/kg
1721	067237	13.5 - 15	27-JUL-91	Beryllium	.930	-	.62	mg/kg
1722	067250	1.5 - 3	29-JUL-91	Cadmium	2.700	-	.91	mg/kg
1722	067250	1.5 - 3	29-JUL-91	Chromium	22.500	J	20.953	mg/kg
1722	067250	1.5 - 3	29-JUL-91	Cyanide	.790	-	.17	mg/kg
1722	067250	1.5 - 3	29-JUL-91	Sodium	342.000	-	227.947	mg/kg
1722	067250	1.5 - 3	29-JUL-91	Silver	12.500	J	0	mg/kg
1722	067250	1.5 - 3	29-JUL-91	Molybdenum	10.200	J	.27	mg/kg
1722	067250	1.5 - 3	29-JUL-91	Lead	147.000	-	15.78	mg/kg
1722	067259	14 - 16.5	30-JUL-91	Beryllium	.630	-	.62	mg/kg
1722	067259	14 - 16.5	30-JUL-91	Chromium	23.400	J	20.953	mg/kg
1722	067259	14 - 16.5	30-JUL-91	Cadmium	2.300	-	.91	mg/kg
1722	067259	14 - 16.5	30-JUL-91	Cyanide	.500	-	.17	mg/kg
1722	067259	14 - 16.5	30-JUL-91	Silver	10.200	-	0	mg/kg
1722	067259	14 - 16.5	30-JUL-91	Molybdenum	11.200	-	.27	mg/kg
1722	067259	14 - 16.5	30-JUL-91	Copper	22.200	-	20.23	mg/kg
1808	067394	3 - 4.5	27-AUG-91	Antimony	10.600	J	0	mg/kg
1808	067394	3 - 4.5	27-AUG-91	Beryllium	.710	-	.62	mg/kg
1808	067394	3 - 4.5	27-AUG-91	Cadmium	2.100	-	.91	mg/kg
1808	067394	3 - 4.5	27-AUG-91	Silver	11.000	-	0	mg/kg
1808	067394	3 - 4.5	27-AUG-91	Molybdenum	11.700	-	.27	mg/kg
1808	067394	3 - 4.5	27-AUG-91	Chromium	25.300	-	20.953	mg/kg

000030

TABLE C-2B
(Continued)

SAMPLE LOCATION	SAMPLE ID	SAMPLE INTERVALS	SAMPLE DATE	PARAMETER	RESULTS	VAL QUAL	BACKGROUND	UNITS
METALS (Continued)								
1808	067396	7.5 - 9	27-AUG-91	Antimony	10.400	J	0	mg/kg
1808	067396	7.5 - 9	27-AUG-91	Beryllium	.880	-	.62	mg/kg
1808	067396	7.5 - 9	27-AUG-91	Cadmium	2.400	-	.91	mg/kg
1808	067396	7.5 - 9	27-AUG-91	Silver	12.500	-	0	mg/kg
1808	067396	7.5 - 9	27-AUG-91	Molybdenum	13.700	-	.27	mg/kg
1808	067396	7.5 - 9	27-AUG-91	Copper	21.300	-	20.23	mg/kg
1808	067396	7.5 - 9	27-AUG-91	Chromium	29.800	-	20.953	mg/kg
1808	067401	15 - 16.5	27-AUG-91	Antimony	20.000	J	0	mg/kg
1808	067401	15 - 16.5	27-AUG-91	Cadmium	4.000	-	.91	mg/kg
1808	067401	15 - 16.5	27-AUG-91	Beryllium	.750	-	.62	mg/kg
1808	067401	15 - 16.5	27-AUG-91	Silver	15.600	-	0	mg/kg
1808	067401	15 - 16.5	27-AUG-91	Molybdenum	14.000	-	.27	mg/kg
1808	067401	15 - 16.5	27-AUG-91	Chromium	29.800	-	20.953	mg/kg
1888	067714	0 - 1.5	23-FEB-92	Aluminum	20800.000	-	16277.291	mg/kg
1888	067714	0 - 1.5	23-FEB-92	Barium	160.000	-	121.064	mg/kg
1888	067714	0 - 1.5	23-FEB-92	Arsenic	9.900	-	9.704	mg/kg
1888	067714	0 - 1.5	23-FEB-92	Cobalt	23.500	-	15.929	mg/kg
1888	067714	0 - 1.5	23-FEB-92	Iron	36800.000	-	31188.164	mg/kg
1888	067714	0 - 1.5	23-FEB-92	Manganese	1140.000	J	1045.407	mg/kg
1888	067714	0 - 1.5	23-FEB-92	Zinc	92.700	J	73.158	mg/kg
1888	067714	0 - 1.5	23-FEB-92	Vanadium	57.300	-	38.088	mg/kg
1888	067714	0 - 1.5	23-FEB-92	Sodium	309.000	-	227.947	mg/kg
1888	067714	0 - 1.5	23-FEB-92	Silver	19.700	J	0	mg/kg
1888	067714	0 - 1.5	23-FEB-92	Silicon	1970.000	-	1069.496	mg/kg
1888	067714	0 - 1.5	23-FEB-92	Potassium	2430.000	-	2007.519	mg/kg
1888	067714	0 - 1.5	23-FEB-92	Nickel	47.100	-	34.747	mg/kg
1888	067714	0 - 1.5	23-FEB-92	Molybdenum	26.800	-	.27	mg/kg
1888	067714	0 - 1.5	23-FEB-92	Lead	30.600	-	15.78	mg/kg
1888	067714	0 - 1.5	23-FEB-92	Copper	41.500	-	20.23	mg/kg
1888	067714	0 - 1.5	23-FEB-92	Chromium	51.800	-	20.953	mg/kg
1888	067714	0 - 1.5	23-FEB-92	Cadmium	6.500	-	.91	mg/kg
1888	067714	0 - 1.5	23-FEB-92	Beryllium	1.600	-	.62	mg/kg
1888	067714	0 - 1.5	23-FEB-92	Antimony	22.000	J	0	mg/kg
1888	067717	5 - 6	23-FEB-92	Aluminum	25200.000	-	16277.291	mg/kg
1888	067717	5 - 6	23-FEB-92	Potassium	2090.000	-	2007.519	mg/kg
1888	067717	5 - 6	23-FEB-92	Nickel	39.300	-	34.747	mg/kg
1888	067717	5 - 6	23-FEB-92	Molybdenum	29.300	-	.27	mg/kg
1888	067717	5 - 6	23-FEB-92	Lead	28.300	-	15.78	mg/kg
1888	067717	5 - 6	23-FEB-92	Iron	42600.000	-	31188.164	mg/kg
1888	067717	5 - 6	23-FEB-92	Copper	40.500	-	20.23	mg/kg
1888	067717	5 - 6	23-FEB-92	Cobalt	26.000	-	15.929	mg/kg

000331

TABLE C-2B
(Continued)

SAMPLE LOCATION	SAMPLE ID	SAMPLE INTERVALS	SAMPLE DATE	PARAMETER	RESULTS	VAL QUAL	BACKGROUND	UNITS
METALS (Continued)								
1888	067717	5 - 6	23-FEB-92	Chromium	49.300	-	20.953	mg/kg
1888	067717	5 - 6	23-FEB-92	Zinc	108.000	J	73.158	mg/kg
1888	067717	5 - 6	23-FEB-92	Vanadium	68.800	-	38.088	mg/kg
1888	067717	5 - 6	23-FEB-92	Thallium	.800	J	.49	mg/kg
1888	067717	5 - 6	23-FEB-92	Silver	12.600	J	0	mg/kg
1888	067717	5 - 6	23-FEB-92	Silicon	2620.000	-	1069.496	mg/kg
1888	067717	5 - 6	23-FEB-92	Cadmium	5.600	-	.91	mg/kg
1888	067717	5 - 6	23-FEB-92	Beryllium	1.600	-	.62	mg/kg
1888	067717	5 - 6	23-FEB-92	Barium	178.000	-	121.064	mg/kg
1888	067717	5 - 6	23-FEB-92	Arsenic	12.500	-	9.704	mg/kg
1888	067717	5 - 6	23-FEB-92	Antimony	14.800	J	0	mg/kg
1889	067740	15.5 - 17.5	25-FEB-92	Antimony	22.600	J	0	mg/kg
1889	067740	15.5 - 17.5	25-FEB-92	Beryllium	.730	-	.62	mg/kg
1889	067740	15.5 - 17.5	25-FEB-92	Cadmium	4.800	J	.91	mg/kg
1889	067740	15.5 - 17.5	25-FEB-92	Thallium	12.500	-	.49	mg/kg
1889	067740	15.5 - 17.5	25-FEB-92	Silver	15.000	-	0	mg/kg
1889	067740	15.5 - 17.5	25-FEB-92	Molybdenum	13.200	J	.27	mg/kg
1889	067740	15.5 - 17.5	25-FEB-92	Copper	22.600	-	20.23	mg/kg
1889	067740	15.5 - 17.5	25-FEB-92	Chromium	29.500	-	20.953	mg/kg
RADIONUCLIDES								
1035	008388	21 - 22.5	21-MAR-88	U-234	5.200	-	1.034	pCi/g
1035	008388	21 - 22.5	21-MAR-88	U-238	18.100	-	1.122	pCi/g
1718	067266	1.5 - 3	31-JUL-91	RA-228	3.150	J	1.325	pCi/g
1718	067266	1.5 - 3	31-JUL-91	U-TOTAL	67.200	J	2.54	mg/kg
1718	067266	1.5 - 3	31-JUL-91	U-238	22.100	-	1.122	pCi/g
1718	067266	1.5 - 3	31-JUL-91	U-235/236	1.650	J	.142	pCi/g
1718	067266	1.5 - 3	31-JUL-91	U-234	23.300	J	1.034	pCi/g
1718	067266	1.5 - 3	31-JUL-91	TH-228	3.390	J	1.341	pCi/g
1718	067266	1.5 - 3	31-JUL-91	TH-232	2.220	-	1.269	pCi/g
1718	067266	1.5 - 3	31-JUL-91	TH-TOTAL	20.000	-	9.47	mg/kg
1718	067266	1.5 - 3	31-JUL-91	TH-230	2.300	J	1.897	pCi/g
1718	067275	9 - 10.5	01-AUG-91	TH-228	2.290	J	1.341	pCi/g
1718	067275	9 - 10.5	01-AUG-91	U-234	8.700	J	1.034	pCi/g
1718	067275	9 - 10.5	01-AUG-91	U-238	40.800	-	1.122	pCi/g
1718	067275	9 - 10.5	01-AUG-91	U-TOTAL	124.000	J	2.54	mg/kg
1718	067275	9 - 10.5	01-AUG-91	U-235/236	1.130	J	.142	pCi/g
1718	067275	9 - 10.5	01-AUG-91	TH-TOTAL	11.300	-	9.47	mg/kg
1718	067279	15 - 16.5	01-AUG-91	U-TOTAL	3.050	J	2.54	mg/kg
1719	067286	1.5 - 3	07-AUG-91	SR-90	.860	J	.56	pCi/g
1719	067286	1.5 - 3	07-AUG-91	U-TOTAL	10.600	J	2.54	mg/kg

TABLE C-2B
(Continued)

SAMPLE LOCATION	SAMPLE ID	SAMPLE INTERVALS	SAMPLE DATE	PARAMETER	RESULTS	VAL QUAL	BACKGROUND	UNITS
RADIONUCLIDES (Continued)								
1719	067286	1.5 - 3	07-AUG-91	U-238	8.660	-	1.122	pCi/g
1719	067286	1.5 - 3	07-AUG-91	U-235/236	1.230	-	.142	pCi/g
1719	067286	1.5 - 3	07-AUG-91	U-234	5.530	-	1.034	pCi/g
1719	067292	10.5 - 12	07-AUG-91	SR-90	1.100	J	.56	pCi/g
1719	067292	10.5 - 12	07-AUG-91	U-235/236	4.500	-	.142	pCi/g
1719	067292	10.5 - 12	07-AUG-91	U-TOTAL	393.000	J	2.54	mg/kg
1719	067292	10.5 - 12	07-AUG-91	U-238	141.000	-	1.122	pCi/g
1719	067292	10.5 - 12	07-AUG-91	U-234	20.500	-	1.034	pCi/g
1719	067296	16.5 - 18	08-AUG-91	SR-90	1.160	J	.56	pCi/g
1719	067296	16.5 - 18	08-AUG-91	U-238	1.590	-	1.122	pCi/g
1719	067296	16.5 - 18	08-AUG-91	U-TOTAL	19.700	J	2.54	mg/kg
1720	067306	1.5 - 3	10-AUG-91	RA-228	1.350	J	1.325	pCi/g
1720	067306	1.5 - 3	10-AUG-91	TH-228	2.100	J	1.341	pCi/g
1720	067306	1.5 - 3	10-AUG-91	TH-230	3.460	J	1.897	pCi/g
1720	067306	1.5 - 3	10-AUG-91	U-TOTAL	150.000	J	2.54	mg/kg
1720	067306	1.5 - 3	10-AUG-91	U-238	45.200	-	1.122	pCi/g
1720	067306	1.5 - 3	10-AUG-91	U-235/236	1.270	J	.142	pCi/g
1720	067306	1.5 - 3	10-AUG-91	U-234	18.500	J	1.034	pCi/g
1720	067306	1.5 - 3	10-AUG-91	SR-90	1.580	J	.56	pCi/g
1720	067310	7.5 - 9	10-AUG-91	SR-90	3.090	J	.56	pCi/g
1720	067310	7.5 - 9	10-AUG-91	U-TOTAL	13.000	J	2.54	mg/kg
1720	067310	7.5 - 9	10-AUG-91	U-238	3.540	-	1.122	pCi/g
1720	067310	7.5 - 9	10-AUG-91	U-234	1.350	J	1.034	pCi/g
1720	067310	7.5 - 9	10-AUG-91	TH-230	2.510	J	1.897	pCi/g
1720	067313	9 - 10.5	10-AUG-91	RA-226	1.550	J	1.47	pCi/g
1720	067313	9 - 10.5	10-AUG-91	RA-228	1.480	J	1.325	pCi/g
1720	067313	9 - 10.5	10-AUG-91	U-TOTAL	5.830	J	2.54	mg/kg
1720	067313	9 - 10.5	10-AUG-91	U-238	1.810	-	1.122	pCi/g
1720	067313	9 - 10.5	10-AUG-91	U-234	1.240	J	1.034	pCi/g
1720	067313	9 - 10.5	10-AUG-91	TH-228	2.020	J	1.341	pCi/g
1720	067313	9 - 10.5	10-AUG-91	SR-90	.900	J	.56	pCi/g
1721	067230	3 - 4.5	26-JUL-91	SR-90	.800	J	.56	pCi/g
1721	067230	3 - 4.5	26-JUL-91	U-TOTAL	6.700	-	2.54	mg/kg
1721	067230	3 - 4.5	26-JUL-91	U-238	2.330	-	1.122	pCi/g
1721	067230	3 - 4.5	26-JUL-91	U-234	1.390	J	1.034	pCi/g
1721	067230	3 - 4.5	26-JUL-91	TH-228	1.570	J	1.341	pCi/g
1721	067233	7.5 - 9	26-JUL-91	RA-224	1.240	-	1.019	pCi/g
1721	067233	7.5 - 9	26-JUL-91	U-234	1.640	-	1.034	pCi/g
1721	067233	7.5 - 9	26-JUL-91	U-TOTAL	8.900	J	2.54	mg/kg
1721	067233	7.5 - 9	26-JUL-91	U-238	3.000	-	1.122	pCi/g
1721	067238	15 - 16.5	28-JUL-91	SR-90	.730	J	.56	pCi/g
1721	067238	15 - 16.5	28-JUL-91	U-234	1.760	J	1.034	pCi/g

TABLE C-2B
(Continued)

SAMPLE LOCATION	SAMPLE ID	SAMPLE INTERVALS	SAMPLE DATE	PARAMETER	RESULTS	VAL QUAL	BACKGROUND	UNITS
RADIONUCLIDES (Continued)								
1721	067238	15 - 16.5	28-JUL-91	U-TOTAL	11.200	-	2.54	mg/kg
1721	067238	15 - 16.5	28-JUL-91	U-238	3.610	-	1.122	pCi/g
1721	067238	15 - 16.5	28-JUL-91	TH-228	1.400	J	1.341	pCi/g
1722	067251	3 - 4.5	29-JUL-91	RA-226	1.500	J	1.47	pCi/g
1722	067251	3 - 4.5	29-JUL-91	U-TOTAL	940.000	J	2.54	mg/kg
1722	067251	3 - 4.5	29-JUL-91	U-238	420.000	-	1.122	pCi/g
1722	067251	3 - 4.5	29-JUL-91	U-235/236	22.400	J	.142	pCi/g
1722	067251	3 - 4.5	29-JUL-91	U-234	334.000	J	1.034	pCi/g
1722	067251	3 - 4.5	29-JUL-91	TH-230	12.300	J	1.897	pCi/g
1722	067251	3 - 4.5	29-JUL-91	TH-228	1.610	J	1.341	pCi/g
1722	067257	11 - 12.5	30-JUL-91	RA-224	1.490	-	1.019	pCi/g
1722	067257	11 - 12.5	30-JUL-91	U-TOTAL	17.500	J	2.54	mg/kg
1722	067257	11 - 12.5	30-JUL-91	U-238	6.530	-	1.122	pCi/g
1722	067257	11 - 12.5	30-JUL-91	U-234	4.510	-	1.034	pCi/g
1722	067257	11 - 12.5	30-JUL-91	TH-TOTAL	10.800	J	9.47	mg/kg
1722	067257	11 - 12.5	30-JUL-91	TH-230	2.400	J	1.897	pCi/g
1722	067257	11 - 12.5	30-JUL-91	SR-90	1.420	-	.56	pCi/g
1722	067258	12.5 - 14	30-JUL-91	RA-224	1.110	-	1.019	pCi/g
1722	067258	12.5 - 14	30-JUL-91	U-234	30.600	-	1.034	pCi/g
1722	067258	12.5 - 14	30-JUL-91	U-235/236	2.470	-	.142	pCi/g
1722	067258	12.5 - 14	30-JUL-91	U-TOTAL	146.000	-	2.54	mg/kg
1722	067258	12.5 - 14	30-JUL-91	U-238	47.700	-	1.122	pCi/g
1722	067258	12.5 - 14	30-JUL-91	TH-230	3.810	-	1.897	pCi/g
1808	067393	1.5 - 3	27-AUG-91	TH-228	4.010	J	1.341	pCi/g
1808	067393	1.5 - 3	27-AUG-91	U-238	17.300	-	1.122	pCi/g
1808	067393	1.5 - 3	27-AUG-91	U-235/236	1.170	J	.142	pCi/g
1808	067393	1.5 - 3	27-AUG-91	U-234	17.600	J	1.034	pCi/g
1808	067393	1.5 - 3	27-AUG-91	TH-230	2.760	J	1.897	pCi/g
1808	067393	1.5 - 3	27-AUG-91	TH-232	3.590	-	1.269	pCi/g
1808	067393	1.5 - 3	27-AUG-91	TH-TOTAL	32.400	-	9.47	mg/kg
1808	067398	10.5 - 12	27-AUG-91	TH-230	2.420	J	1.897	pCi/g
1808	067398	10.5 - 12	27-AUG-91	TH-TOTAL	10.100	-	9.47	mg/kg
1808	067398	10.5 - 12	27-AUG-91	U-238	21.000	-	1.122	pCi/g
1808	067398	10.5 - 12	27-AUG-91	U-TOTAL	66.800	J	2.54	mg/kg
1808	067398	10.5 - 12	27-AUG-91	U-235/236	.606	J	.142	pCi/g
1808	067398	10.5 - 12	27-AUG-91	U-234	6.260	J	1.034	pCi/g
1808	067400	13.5 - 15	27-AUG-91	TH-230	1.920	J	1.897	pCi/g
1808	067400	13.5 - 15	27-AUG-91	U-TOTAL	3.210	J	2.54	mg/kg
1888	067718	6 - 7.5	23-FEB-92	PB-210	1.030	J	.857	pCi/g
1888	067718	6 - 7.5	23-FEB-92	TH-230	2.300	-	1.897	pCi/g
1888	067718	6 - 7.5	23-FEB-92	TH-228	1.370	-	1.341	pCi/g

TABLE C-2B
(Continued)

SAMPLE LOCATION	SAMPLE ID	SAMPLE INTERVALS	SAMPLE DATE	PARAMETER	RESULTS	VAL QUAL	BACKGROUND	UNITS
RADIONUCLIDES (Continued)								
1888	067718	6 - 7.5	23-FEB-92	TH-232	1.580	-	1.269	pCi/g
1888	067718	6 - 7.5	23-FEB-92	U-234	4.100	-	1.034	pCi/g
1888	067718	6 - 7.5	23-FEB-92	U-TOTAL	19.000	J	2.54	mg/kg
1888	067718	6 - 7.5	23-FEB-92	U-238	5.300	-	1.122	pCi/g
1888	067718	6 - 7.5	23-FEB-92	TH-TOTAL	14.300	-	9.47	mg/kg
1888	067718	6 - 7.5	23-FEB-92	RA-224	2.140	J	1.019	pCi/g
1888	067718	6 - 7.5	23-FEB-92	SR-90	1.010	-	.56	pCi/g
1888	067718	6 - 7.5	23-FEB-92	RA-228	1.570	J	1.325	pCi/g
VOLATILE ORGANICS								
1719	067287	3 - 4.5	07-AUG-91	1,2-Dichloroethane	6.000	J	0	ug/kg
1719	067287	3 - 4.5	07-AUG-91	Chlorobenzene	2.000	J	0	ug/kg
1719	067287	3 - 4.5	07-AUG-91	Acetone	7.000	J	0	ug/kg
1719	067295	15 - 16.5	08-AUG-91	2-Hexanone	1.000	J	0	ug/kg
1719	067295	15 - 16.5	08-AUG-91	Acetone	10.000	J	0	ug/kg
1719	067295	15 - 16.5	08-AUG-91	Trichlorofluoromethane	840.000	J	0	ug/kg
1719	067295	15 - 16.5	08-AUG-91	Xylenes, Total	100.000	-	0	ug/kg
1719	067295	15 - 16.5	08-AUG-91	Toluene	8.000	-	0	ug/kg
1719	067295	15 - 16.5	08-AUG-91	Ethylbenzene	18.000	-	0	ug/kg
1719	067295	15 - 16.5	08-AUG-91	Chlorobenzene	6.000	J	0	ug/kg
1719	067295	15 - 16.5	08-AUG-91	4-Methyl-2-pentanone	1.000	J	0	ug/kg
1719	067300	18 - 19.5	08-AUG-91	Acetone	10.000	J	0	ug/kg
1720	067311	7.5 - 9	10-AUG-91	1,2-Dichloroethene	12.000	-	0	ug/kg
1720	067311	7.5 - 9	10-AUG-91	Methylene chloride	6.000	-	0	ug/kg
1721	067234	9 - 10.5	26-JUL-91	1,1-Dichloroethane	16.000	-	0	ug/kg
1721	067234	9 - 10.5	26-JUL-91	Acetone	39.000	-	0	ug/kg
1721	067234	9 - 10.5	26-JUL-91	1,4-Dioxane	12900.000	J	0	ug/kg
1721	067234	9 - 10.5	26-JUL-91	Methylene chloride	8.000	-	0	ug/kg
1721	067234	9 - 10.5	26-JUL-91	Dichlorodifluoromethane	576.000	-	0	ug/kg
1721	067234	9 - 10.5	26-JUL-91	Chloromethane	6.000	J	0	ug/kg
1721	067237	13.5 - 15	27-JUL-91	1,2-Dichloroethene	2.000	J	0	ug/kg
1722	067250	1.5 - 3	29-JUL-91	1,1-Dichloroethane	130.000	-	0	ug/kg
1722	067259	14 - 16.5	30-JUL-91	2-Butanone	3.000	J	0	ug/kg
1808	067394	3 - 4.5	27-AUG-91	Tetrachloroethene	30.000	J	0	ug/kg
1808	067396	7.5 - 9	27-AUG-91	1,4-Dioxane	66.000	J	0	ug/kg
1808	067396	7.5 - 9	27-AUG-91	Pyridine	3.000	J	0	ug/kg
1808	067396	7.5 - 9	27-AUG-91	4-Methyl-2-pentanone	1.000	J	0	ug/kg
1808	067401	15 - 16.5	27-AUG-91	Styrene	2.000	J	0	ug/kg
1808	067401	15 - 16.5	27-AUG-91	Toluene	1.000	J	0	ug/kg
1888	067714	0 - 1.5	23-FEB-92	Methylene chloride	6.000	-	0	ug/kg
1888	067714	0 - 1.5	23-FEB-92	Toluene	2.000	J	0	ug/kg

TABLE C-2B
(Continued)

SAMPLE LOCATION	SAMPLE ID	SAMPLE INTERVALS	SAMPLE DATE	PARAMETER	RESULTS	VAL QUAL	BACKGROUND	UNITS
VOLATILE ORGANICS (Continued)								
1888	067717	5 - 6	23-FEB-92	1,2-Dichloroethene	3.000	J	0	ug/kg
1888	067717	5 - 6	23-FEB-92	Acetone	7.000	-	0	ug/kg
1888	067717	5 - 6	23-FEB-92	Methylene chloride	6.000	-	0	ug/kg
1889	067740	15.5 - 17.5	25-FEB-92	Methylene chloride	13.000	-	0	ug/kg
SEMIVOLATILE ORGANICS								
1719	067287	3 - 4.5	07-AUG-91	2-Methylnaphthalene	93.000	J	0	ug/kg
1719	067287	3 - 4.5	07-AUG-91	Benzo(a)anthracene	7500.000	-	0	ug/kg
1719	067287	3 - 4.5	07-AUG-91	Acenaphthene	840.000	-	0	ug/kg
1719	067287	3 - 4.5	07-AUG-91	Benzo(a)pyrene	8200.000	-	0	ug/kg
1719	067287	3 - 4.5	07-AUG-91	Benzo(b)fluoranthene	15000.000	-	0	ug/kg
1719	067287	3 - 4.5	07-AUG-91	Phenanthrene	4800.000	-	0	ug/kg
1719	067287	3 - 4.5	07-AUG-91	Naphthalene	140.000	J	0	ug/kg
1719	067287	3 - 4.5	07-AUG-91	Indeno(1,2,3-cd)pyrene	5500.000	-	0	ug/kg
1719	067287	3 - 4.5	07-AUG-91	Fluorene	640.000	-	0	ug/kg
1719	067287	3 - 4.5	07-AUG-91	Fluoranthene	12000.000	-	0	ug/kg
1719	067287	3 - 4.5	07-AUG-91	Dibenzofuran	340.000	J	0	ug/kg
1719	067287	3 - 4.5	07-AUG-91	Dibenzo(a,h)anthracene	49.000	J	0	ug/kg
1719	067287	3 - 4.5	07-AUG-91	Chrysene	5600.000	-	0	ug/kg
1719	067287	3 - 4.5	07-AUG-91	Pyrene	12000.000	-	0	ug/kg
1719	067287	3 - 4.5	07-AUG-91	Anthracene	1000.000	-	0	ug/kg
1719	067295	15 - 16.5	08-AUG-91	Anthracene	130.000	J	0	ug/kg
1719	067295	15 - 16.5	08-AUG-91	Benzo(a)anthracene	290.000	J	0	ug/kg
1719	067295	15 - 16.5	08-AUG-91	Benzo(b)fluoranthene	260.000	J	0	ug/kg
1719	067295	15 - 16.5	08-AUG-91	Benzo(g,h,i)perylene	300.000	J	0	ug/kg
1719	067295	15 - 16.5	08-AUG-91	Chrysene	370.000	J	0	ug/kg
1719	067295	15 - 16.5	08-AUG-91	Di-n-butyl phthalate	120.000	J	0	ug/kg
1719	067295	15 - 16.5	08-AUG-91	Benzoic acid	110.000	J	0	ug/kg
1719	067295	15 - 16.5	08-AUG-91	bis(2-Ethylhexyl) phthalate	1200.000	-	0	ug/kg
1719	067295	15 - 16.5	08-AUG-91	Pyrene	610.000	J	0	ug/kg
1719	067295	15 - 16.5	08-AUG-91	Phenanthrene	620.000	J	0	ug/kg
1719	067295	15 - 16.5	08-AUG-91	Indeno(1,2,3-cd)pyrene	210.000	J	0	ug/kg
1719	067295	15 - 16.5	08-AUG-91	Fluoranthene	720.000	J	0	ug/kg
1719	067295	15 - 16.5	08-AUG-91	Dibenzo(a,h)anthracene	110.000	J	0	ug/kg
1719	067295	15 - 16.5	08-AUG-91	Benzo(k)fluoranthene	300.000	J	0	ug/kg
1719	067295	15 - 16.5	08-AUG-91	Benzo(a)pyrene	290.000	J	0	ug/kg
1719	067300	18 - 19.5	08-AUG-91	Benzo(a)anthracene	72.000	J	0	ug/kg
1719	067300	18 - 19.5	08-AUG-91	Fluoranthene	150.000	J	0	ug/kg
1719	067300	18 - 19.5	08-AUG-91	Chrysene	74.000	J	0	ug/kg
1719	067300	18 - 19.5	08-AUG-91	Phenanthrene	83.000	J	0	ug/kg
1719	067300	18 - 19.5	08-AUG-91	bis(2-Ethylhexyl) phthalate	40.000	J	0	ug/kg

TABLE C-2B
(Continued)

SAMPLE LOCATION	SAMPLE ID	SAMPLE INTERVALS	SAMPLE DATE	PARAMETER	RESULTS	VAL QUAL	BACKGROUND	UNITS
SEMIVOLATILE ORGANICS (Continued)								
1719	067300	18 - 19.5	08-AUG-91	Pyrene	140.000	J	0	ug/kg
1719	067300	18 - 19.5	08-AUG-91	Benzo(b)fluoranthene	150.000	J	0	ug/kg
1720	067307	3 - 4.5	10-AUG-91	2-Chlorophenol	49.000	J	0	ug/kg
1720	067307	3 - 4.5	10-AUG-91	4-Chloro-3-methylphenol	55.000	J	0	ug/kg
1720	067307	3 - 4.5	10-AUG-91	Pyrene	270.000	J	0	ug/kg
1720	067307	3 - 4.5	10-AUG-91	Phenol	61.000	J	0	ug/kg
1720	067307	3 - 4.5	10-AUG-91	Phenanthrene	160.000	J	0	ug/kg
1720	067307	3 - 4.5	10-AUG-91	Fluoranthene	250.000	J	0	ug/kg
1720	067307	3 - 4.5	10-AUG-91	Chrysene	140.000	J	0	ug/kg
1720	067307	3 - 4.5	10-AUG-91	Benzo(b)fluoranthene	190.000	J	0	ug/kg
1720	067307	3 - 4.5	10-AUG-91	Benzo(a)pyrene	69.000	J	0	ug/kg
1720	067307	3 - 4.5	10-AUG-91	Benzo(a)anthracene	130.000	J	0	ug/kg
1720	067307	3 - 4.5	10-AUG-91	Acenaphthene	53.000	J	0	ug/kg
1720	067311	7.5 - 9	10-AUG-91	Benzo(a)anthracene	43.000	J	0	ug/kg
1720	067311	7.5 - 9	10-AUG-91	Pyrene	73.000	J	0	ug/kg
1720	067311	7.5 - 9	10-AUG-91	Phenanthrene	53.000	J	0	ug/kg
1720	067311	7.5 - 9	10-AUG-91	Fluoranthene	94.000	J	0	ug/kg
1720	067311	7.5 - 9	10-AUG-91	Benzo(b)fluoranthene	54.000	J	0	ug/kg
1720	067311	7.5 - 9	10-AUG-91	Chrysene	47.000	J	0	ug/kg
1720	067312	9 - 10.5	10-AUG-91	Diethyl phthalate	750.000	J	0	ug/kg
1808	067394	3 - 4.5	27-AUG-91	Acenaphthene	250.000	J	0	ug/kg
1808	067394	3 - 4.5	27-AUG-91	Benzo(g,h,i)perylene	490.000	J	0	ug/kg
1808	067394	3 - 4.5	27-AUG-91	Benzo(a)pyrene	700.000	J	0	ug/kg
1808	067394	3 - 4.5	27-AUG-91	Pyrene	1800.000	J	0	ug/kg
1808	067394	3 - 4.5	27-AUG-91	Phenanthrene	1900.000	J	0	ug/kg
1808	067394	3 - 4.5	27-AUG-91	Naphthalene	41.000	J	0	ug/kg
1808	067394	3 - 4.5	27-AUG-91	Indeno(1,2,3-cd)pyrene	440.000	J	0	ug/kg
1808	067394	3 - 4.5	27-AUG-91	Fluorene	250.000	J	0	ug/kg
1808	067394	3 - 4.5	27-AUG-91	Fluoranthene	2200.000	J	0	ug/kg
1808	067394	3 - 4.5	27-AUG-91	Dibenzofuran	160.000	J	0	ug/kg
1808	067394	3 - 4.5	27-AUG-91	Dibenzo(a,h)anthracene	92.000	J	0	ug/kg
1808	067394	3 - 4.5	27-AUG-91	Chrysene	1100.000	J	0	ug/kg
1808	067394	3 - 4.5	27-AUG-91	Benzo(b)fluoranthene	1500.000	J	0	ug/kg
1808	067394	3 - 4.5	27-AUG-91	Anthracene	270.000	J	0	ug/kg
1808	067394	3 - 4.5	27-AUG-91	Benzo(a)anthracene	910.000	J	0	ug/kg
1808	067396	7.5 - 9	27-AUG-91	Acenaphthene	98.000	J	0	ug/kg
1808	067396	7.5 - 9	27-AUG-91	Acenaphthene	240.000	J	0	ug/kg
1808	067396	7.5 - 9	27-AUG-91	Anthracene	260.000	J	0	ug/kg
1808	067396	7.5 - 9	27-AUG-91	Benzo(a)anthracene	1100.000	J	0	ug/kg
1808	067396	7.5 - 9	27-AUG-91	Phenanthrene	1200.000	J	0	ug/kg
1808	067396	7.5 - 9	27-AUG-91	Phenanthrene	2700.000	J	0	ug/kg

TABLE C-2B
(Continued)

SAMPLE LOCATION	SAMPLE ID	SAMPLE INTERVALS	SAMPLE DATE	PARAMETER	RESULTS	VAL QUAL	BACKGROUND	UNITS
SEMIVOLATILE ORGANICS (Continued)								
1808	067396	7.5 - 9	27-AUG-91	Chrysene	810.000	J	0	ug/kg
1808	067396	7.5 - 9	27-AUG-91	Benzo(k)fluoranthene	1800.000	J	0	ug/kg
1808	067396	7.5 - 9	27-AUG-91	Benzo(k)fluoranthene	600.000	J	0	ug/kg
1808	067396	7.5 - 9	27-AUG-91	Benzo(g,h,i)perylene	480.000	J	0	ug/kg
1808	067396	7.5 - 9	27-AUG-91	Benzo(g,h,i)perylene	650.000	J	0	ug/kg
1808	067396	7.5 - 9	27-AUG-91	Benzo(b)fluoranthene	560.000	J	0	ug/kg
1808	067396	7.5 - 9	27-AUG-91	Benzo(a)pyrene	1000.000	J	0	ug/kg
1808	067396	7.5 - 9	27-AUG-91	Benzo(a)pyrene	600.000	J	0	ug/kg
1808	067396	7.5 - 9	27-AUG-91	Indeno(1,2,3-cd)pyrene	430.000	J	0	ug/kg
1808	067396	7.5 - 9	27-AUG-91	Indeno(1,2,3-cd)pyrene	620.000	J	0	ug/kg
1808	067396	7.5 - 9	27-AUG-91	Fluorene	88.000	J	0	ug/kg
1808	067396	7.5 - 9	27-AUG-91	Fluorene	250.000	J	0	ug/kg
1808	067396	7.5 - 9	27-AUG-91	Fluoranthene	1600.000	J	0	ug/kg
1808	067396	7.5 - 9	27-AUG-91	Fluoranthene	3300.000	J	0	ug/kg
1808	067396	7.5 - 9	27-AUG-91	Diethyl phthalate	680.000	J	0	ug/kg
1808	067396	7.5 - 9	27-AUG-91	Dibenzo(a,h)anthracene	180.000	J	0	ug/kg
1808	067396	7.5 - 9	27-AUG-91	Dibenzo(a,h)anthracene	250.000	J	0	ug/kg
1808	067396	7.5 - 9	27-AUG-91	Chrysene	1400.000	J	0	ug/kg
1808	067396	7.5 - 9	27-AUG-91	Benzo(a)anthracene	600.000	J	0	ug/kg
1808	067396	7.5 - 9	27-AUG-91	Anthracene	390.000	J	0	ug/kg
1808	067396	7.5 - 9	27-AUG-91	Pyrene	1400.000	J	0	ug/kg
1808	067396	7.5 - 9	27-AUG-91	Pyrene	2500.000	J	0	ug/kg
1888	067717	5 - 6	23-FEB-92	Chrysene	47.000	J	0	ug/kg
1888	067717	5 - 6	23-FEB-92	bis(2-Ethylhexyl) phthalate	920.000	-	0	ug/kg
1888	067717	5 - 6	23-FEB-92	Diethyl phthalate	45.000	J	0	ug/kg
1888	067717	5 - 6	23-FEB-92	Pyrene	81.000	J	0	ug/kg
1888	067717	5 - 6	23-FEB-92	Phenanthrene	160.000	J	0	ug/kg
PESTICIDES/PCBs								
1721	067234	9 - 10.5	26-JUL-91	Aroclor-1260	610.000	-	0	ug/kg
1808	067394	3 - 4.5	27-AUG-91	Aroclor-1254	150.000	J	0	ug/kg
DIOXIN/FURAN								
1718	067267	3 - 4.5	31-JUL-91	Octachlorodibenzo-p-dioxin	13.700	J	0	ug/kg
1718	067271	7.5 - 9	31-JUL-91	Octachlorodibenzo-p-dioxin	.440	J	0	ug/kg
1718	067278	13.5 - 15	01-AUG-91	1,2,3,7,8-Pentachlorodibenzo-p-dioxin	.067	-	0	ug/kg
1718	067278	13.5 - 15	01-AUG-91	Octachlorodibenzo-p-dioxin	.110	J	0	ug/kg
1719	067287	3 - 4.5	07-AUG-91	1,2,3,4,6,7,8-Heptachlorodibenzo-p-dioxin	.380	-	0	ug/kg
1719	067287	3 - 4.5	07-AUG-91	Heptachlorodibenzo-p-dioxin	.650	-	0	ug/kg
1719	067287	3 - 4.5	07-AUG-91	Octachlorodibenzo-p-dioxin	7.100	J	0	ug/kg
1719	067287	3 - 4.5	07-AUG-91	1,2,3,4,6,7,8-Heptachlorodibenzofuran	.073	-	0	ug/kg

TABLE C-2B
(Continued)

SAMPLE LOCATION	SAMPLE ID	SAMPLE INTERVALS	SAMPLE DATE	PARAMETER	RESULTS	VAL QUAL	BACKGROUND	UNITS
DIOXIN/FURAN (Continued)								
1719	067287	3 - 4.5	07-AUG-91	Heptachlorodibenzofuran	.250	-	0	ug/kg
1719	067295	15 - 16.5	08-AUG-91	Octachlorodibenzo-p-dioxin	.710	J	0	ug/kg
1719	067300	18 - 19.5	08-AUG-91	Octachlorodibenzo-p-dioxin	.063	J	0	ug/kg
1720	067307	3 - 4.5	10-AUG-91	Octachlorodibenzo-p-dioxin	7.800	J	0	ug/kg
1720	067311	7.5 - 9	10-AUG-91	Octachlorodibenzo-p-dioxin	7.200	J	0	ug/kg
1720	067312	9 - 10.5	10-AUG-91	Octachlorodibenzo-p-dioxin	.860	J	0	ug/kg
1721	067234	9 - 10.5	26-JUL-91	Octachlorodibenzo-p-dioxin	.310	J	0	ug/kg
1721	067237	13.5 - 15	27-JUL-91	Octachlorodibenzo-p-dioxin	.050	J	0	ug/kg
1722	067250	1.5 - 3	29-JUL-91	Octachlorodibenzo-p-dioxin	.055	J	0	ug/kg
1722	067259	14 - 16.5	30-JUL-91	Octachlorodibenzo-p-dioxin	.050	J	0	ug/kg
1808	067394	3 - 4.5	27-AUG-91	Octachlorodibenzo-p-dioxin	.310	J	0	ug/kg
1808	067396	7.5 - 9	27-AUG-91	Heptachlorodibenzo-p-dioxin	.900	J	0	ug/kg
1808	067396	7.5 - 9	27-AUG-91	Octachlorodibenzo-p-dioxin	2.700	-	0	ug/kg
1808	067401	15 - 16.5	27-AUG-91	Octachlorodibenzo-p-dioxin	.085	J	0	ug/kg
1888	067714	0 - 1.5	23-FEB-92	Octachlorodibenzo-p-dioxin	1.000	-	0	ug/kg
1888	067717	5 - 6	23-FEB-92	Octachlorodibenzo-p-dioxin	3.800	-	0	ug/kg
GENERAL CHEMISTRY								
1808	067395	4.5 - 6	27-AUG-91	Total Organic Carbon	20463.000	-	0	mg/kg
1808	067405	10.5 - 12	27-AUG-91	Total Organic Carbon	27071.000	-	0	mg/kg
1808	067406	13.5 - 15	27-AUG-91	Total Organic Carbon	10912.000	-	0	mg/kg
1888	067714	0 - 1.5	23-FEB-92	Total Organic Carbon	10692.000	-	0	mg/kg
1888	067718	6 - 7.5	23-FEB-92	Total Organic Carbon	7403.000	-	0	mg/kg
1889	067740	15.5 - 17.5	25-FEB-92	Total Organic Carbon	6020.000	J	0	mg/kg

TABLE C-2C

SOLID WASTE LANDFILL
CONCENTRATIONS OF DETECTED ANALYTES
ABOVE BACKGROUND IN SUBSURFACE SOIL
PHASE II FIELD INVESTIGATION
OPERABLE UNIT 2 REMEDIAL INVESTIGATION
FERNALD ENVIRONMENTAL MANAGEMENT PROJECT

SAMPLE LOCATION	SAMPLE ID	SAMPLE INTERVALS	SAMPLE DATE	PARAMETER	RESULTS	VAL QUAL	BACKGROUND	UNITS
METALS								
11036	115380	17 - 19	17-MAY-93	Magnesium	63400.000	-	43052.339	mg/kg
11036	115380	17 - 19	17-MAY-93	Molybdenum	4.300	J	.27	mg/kg
11036	115380	17 - 19	17-MAY-93	Silver	2.600	J	0	mg/kg
11036	115381	2.5 - 5	17-MAY-93	Barium	251.000	-	121.064	mg/kg
11036	115381	2.5 - 5	17-MAY-93	Lead	17.200	-	15.78	mg/kg
11036	115381	2.5 - 5	17-MAY-93	Silver	4.600	-	0	mg/kg
11036	115381	2.5 - 5	17-MAY-93	Sodium	338.000	-	227.947	mg/kg
11036	115381	2.5 - 5	17-MAY-93	Molybdenum	5.300	-	.27	mg/kg
11037	115371	5 - 7.5	15-MAY-93	Barium	182.000	-	121.064	mg/kg
11037	115371	5 - 7.5	15-MAY-93	Lead	16.300	J	15.78	mg/kg
11037	115371	5 - 7.5	15-MAY-93	Beryllium	.730	-	.62	mg/kg
11037	115371	5 - 7.5	15-MAY-93	Molybdenum	7.400	-	.27	mg/kg
11037	115371	5 - 7.5	15-MAY-93	Vanadium	38.400	-	38.088	mg/kg
11037	115371	5 - 7.5	15-MAY-93	Silver	7.300	-	0	mg/kg
11037	115372	17.5 - 20	15-MAY-93	Molybdenum	5.400	-	.27	mg/kg
11037	115372	17.5 - 20	15-MAY-93	Selenium	.480	-	0	mg/kg
11037	115372	17.5 - 20	15-MAY-93	Silver	4.600	-	0	mg/kg
11038	115376	0 - 2.5	16-MAY-93	Molybdenum	4.800	-	.27	mg/kg
11038	115376	0 - 2.5	16-MAY-93	Silver	4.400	-	0	mg/kg
11038	115377	12.5 - 15	16-MAY-93	Copper	22.800	-	20.23	mg/kg
11038	115377	12.5 - 15	16-MAY-93	Silver	7.500	-	0	mg/kg
11038	115377	12.5 - 15	16-MAY-93	Potassium	2480.000	-	2007.519	mg/kg
11038	115377	12.5 - 15	16-MAY-93	Molybdenum	8.600	-	.27	mg/kg
11039	115384	2.5 - 5	19-MAY-93	Molybdenum	2.600	-	.27	mg/kg
11039	115384	2.5 - 5	19-MAY-93	Sodium	264.000	-	227.947	mg/kg
11039	115385	12 - 14	19-MAY-93	Arsenic	11.500	-	9.704	mg/kg
11039	115385	12 - 14	19-MAY-93	Copper	23.200	-	20.23	mg/kg
11039	115385	12 - 14	19-MAY-93	Silver	7.400	-	0	mg/kg
11039	115385	12 - 14	19-MAY-93	Molybdenum	9.000	-	.27	mg/kg
11040	115392	2.5 - 5	20-MAY-93	Beryllium	.690	-	.62	mg/kg
11040	115392	2.5 - 5	20-MAY-93	Silver	6.300	-	0	mg/kg
11040	115392	2.5 - 5	20-MAY-93	Molybdenum	6.400	-	.27	mg/kg
11040	115393	12.5 - 15	20-MAY-93	Arsenic	10.400	J	9.704	mg/kg
11040	115393	12.5 - 15	20-MAY-93	Molybdenum	8.600	-	.27	mg/kg

TABLE C-2C
(Continued)

SAMPLE LOCATION	SAMPLE ID	SAMPLE INTERVALS	SAMPLE DATE	PARAMETER	RESULTS	VAL QUAL	BACKGROUND	UNITS
METALS (Continued)								
11040	115393	12.5 - 15	20-MAY-93	Beryllium	.650	-	.62	mg/kg
11040	115393	12.5 - 15	20-MAY-93	Copper	21.800	-	20.23	mg/kg
11040	115393	12.5 - 15	20-MAY-93	Silver	7.700	-	0	mg/kg
11041	115389	0 - 2.5	19-MAY-93	Magnesium	45400.000	-	43052.339	mg/kg
11041	115389	0 - 2.5	19-MAY-93	Silver	3.600	J	0	mg/kg
11041	115389	0 - 2.5	19-MAY-93	Molybdenum	4.700	J	.27	mg/kg
11041	115390	12.5 - 15	19-MAY-93	Molybdenum	5.900	J	.27	mg/kg
11041	115390	12.5 - 15	19-MAY-93	Silver	4.300	J	0	mg/kg
1982	111484	0 - 2.5	06-MAY-93	Beryllium	.960	-	.62	mg/kg
1982	111484	0 - 2.5	06-MAY-93	Cadmium	1.300	-	.91	mg/kg
1983	111476	1.5 - 2.5	03-MAY-93	Beryllium	1.700	-	.62	mg/kg
1983	111476	1.5 - 2.5	03-MAY-93	Molybdenum	.860	-	.27	mg/kg
1983	111476	1.5 - 2.5	03-MAY-93	Cadmium	.990	-	.91	mg/kg
1983	111477	2.5 - 5	03-MAY-93	Beryllium	1.800	-	.62	mg/kg
1983	111477	2.5 - 5	03-MAY-93	Cadmium	1.100	-	.91	mg/kg
1983	111477	2.5 - 5	03-MAY-93	Molybdenum	1.700	-	.27	mg/kg
1983	111477	2.5 - 5	03-MAY-93	Copper	20.900	-	20.23	mg/kg
1984	111466	2.5 - 5	01-MAY-93	Beryllium	1.300	-	.62	mg/kg
1984	111466	2.5 - 5	01-MAY-93	Silicon	1690.000	J	1069.496	mg/kg
1984	111466	2.5 - 5	01-MAY-93	Cadmium	1.500	-	.91	mg/kg
1984	111468	12.5 - 15	01-MAY-93	Barium	163.000	J	121.064	mg/kg
1984	111468	12.5 - 15	01-MAY-93	Silicon	1410.000	J	1069.496	mg/kg
1984	111468	12.5 - 15	01-MAY-93	Potassium	2330.000	J	2007.519	mg/kg
1984	111468	12.5 - 15	01-MAY-93	Nickel	36.500	-	34.747	mg/kg
1984	111468	12.5 - 15	01-MAY-93	Manganese	1130.000	J	1045.407	mg/kg
1984	111468	12.5 - 15	01-MAY-93	Beryllium	1.400	-	.62	mg/kg
1984	111468	12.5 - 15	01-MAY-93	Chromium	22.500	-	20.953	mg/kg
1984	111468	12.5 - 15	01-MAY-93	Copper	26.900	-	20.23	mg/kg
1984	111468	12.5 - 15	01-MAY-93	Iron	32500.000	J	31188.164	mg/kg
1984	111468	12.5 - 15	01-MAY-93	Cobalt	20.400	-	15.929	mg/kg
1984	111468	12.5 - 15	01-MAY-93	Cadmium	2.000	-	.91	mg/kg
1985	111441	2 - 4	26-APR-93	Beryllium	1.300	-	.62	mg/kg
1985	111441	2 - 4	26-APR-93	Silver	.430	-	0	mg/kg
1985	111441	2 - 4	26-APR-93	Molybdenum	1.600	-	.27	mg/kg
1985	111448	15 - 17	27-APR-93	Beryllium	1.300	-	.62	mg/kg
1985	111448	15 - 17	27-APR-93	Molybdenum	1.600	-	.27	mg/kg
1986	111452	2.5 - 5	28-APR-93	Beryllium	1.600	-	.62	mg/kg
1986	111452	2.5 - 5	28-APR-93	Molybdenum	1.100	-	.27	mg/kg
1986	111458	12.5 - 15	30-APR-93	Beryllium	1.400	-	.62	mg/kg
1986	111458	12.5 - 15	30-APR-93	Cadmium	1.400	-	.91	mg/kg
1987	115357	5 - 7.5	13-MAY-93	Aluminum	16300.000	-	16277.291	mg/kg
1987	115357	5 - 7.5	13-MAY-93	Zinc	84.700	J	73.158	mg/kg

TABLE C-2C
(Continued)

SAMPLE LOCATION	SAMPLE ID	SAMPLE INTERVALS	SAMPLE DATE	PARAMETER	RESULTS	VAL QUAL	BACKGROUND	UNITS
METALS (Continued)								
1987	115357	5 - 7.5	13-MAY-93	Silicon	1240.000	J	1069.496	mg/kg
1987	115357	5 - 7.5	13-MAY-93	Molybdenum	2.200	-	.27	mg/kg
1987	115357	5 - 7.5	13-MAY-93	Copper	21.600	-	20.23	mg/kg
1987	115357	5 - 7.5	13-MAY-93	Cadmium	1.400	-	.91	mg/kg
1987	115357	5 - 7.5	13-MAY-93	Barium	142.000	J	121.064	mg/kg
1987	115357	5 - 7.5	13-MAY-93	Beryllium	1.300	-	.62	mg/kg
1987	115359	12.5 - 15	13-MAY-93	Beryllium	.860	-	.62	mg/kg
1987	115359	12.5 - 15	13-MAY-93	Molybdenum	2.900	-	.27	mg/kg
1988	115350	2.5 - 5	12-MAY-93	Barium	122.000	J	121.064	mg/kg
1988	115350	2.5 - 5	12-MAY-93	Molybdenum	1.300	-	.27	mg/kg
1988	115350	2.5 - 5	12-MAY-93	Copper	22.700	-	20.23	mg/kg
1988	115350	2.5 - 5	12-MAY-93	Cadmium	1.100	-	.91	mg/kg
1988	115350	2.5 - 5	12-MAY-93	Beryllium	1.500	-	.62	mg/kg
1988	115351	17.5 - 20	12-MAY-93	Barium	124.000	J	121.064	mg/kg
1988	115351	17.5 - 20	12-MAY-93	Molybdenum	2.500	-	.27	mg/kg
1988	115351	17.5 - 20	12-MAY-93	Cadmium	1.100	-	.91	mg/kg
1988	115351	17.5 - 20	12-MAY-93	Beryllium	1.400	-	.62	mg/kg
1988	115351	17.5 - 20	12-MAY-93	Calcium	151000.000	-	150000	mg/kg
1989	115362	2.5 - 5	14-MAY-93	Copper	21.900	J	20.23	mg/kg
1989	115362	2.5 - 5	14-MAY-93	Silver	5.000	-	0	mg/kg
1989	115362	2.5 - 5	14-MAY-93	Molybdenum	5.000	-	.27	mg/kg
1989	115362	2.5 - 5	14-MAY-93	Lead	16.900	J	15.78	mg/kg
1989	115363	12.5 - 15	14-MAY-93	Molybdenum	8.200	-	.27	mg/kg
1989	115363	12.5 - 15	14-MAY-93	Silver	5.900	-	0	mg/kg
1989	115363	12.5 - 15	14-MAY-93	Potassium	2470.000	-	2007.519	mg/kg
1990	115329	6 - 9	10-MAY-93	Beryllium	1.400	-	.62	mg/kg
1990	115329	6 - 9	10-MAY-93	Molybdenum	1.200	-	.27	mg/kg
1990	115335	17.5 - 20	10-MAY-93	Beryllium	1.000	J	.62	mg/kg
1990	115335	17.5 - 20	10-MAY-93	Molybdenum	2.200	-	.27	mg/kg
1991	115319	7.5 - 10	06-MAY-93	Arsenic	13.900	-	9.704	mg/kg
1991	115319	7.5 - 10	06-MAY-93	Lead	17.300	J	15.78	mg/kg
1991	115319	7.5 - 10	06-MAY-93	Copper	25.800	J	20.23	mg/kg
1991	115319	7.5 - 10	06-MAY-93	Cadmium	.940	-	.91	mg/kg
1991	115319	7.5 - 10	06-MAY-93	Beryllium	.690	-	.62	mg/kg
1991	115321	12 - 15	06-MAY-93	Aluminum	16900.000	-	16277.291	mg/kg
1991	115321	12 - 15	06-MAY-93	Copper	24.200	J	20.23	mg/kg
1991	115321	12 - 15	06-MAY-93	Cadmium	1.200	-	.91	mg/kg
1991	115321	12 - 15	06-MAY-93	Beryllium	.840	-	.62	mg/kg
1992	115343	7.5 - 10	11-MAY-93	Barium	123.000	-	121.064	mg/kg
1992	115343	7.5 - 10	11-MAY-93	Potassium	2020.000	-	2007.519	mg/kg
1992	115343	7.5 - 10	11-MAY-93	Molybdenum	.880	-	.27	mg/kg
1992	115343	7.5 - 10	11-MAY-93	Chromium	36.900	-	20.953	mg/kg

TABLE C-2C
(Continued)

SAMPLE LOCATION	SAMPLE ID	SAMPLE INTERVALS	SAMPLE DATE	PARAMETER	RESULTS	VAL QUAL	BACKGROUND	UNITS
METALS (Continued)								
1992	115343	7.5 - 10	11-MAY-93	Cadmium	.930	-	.91	mg/kg
1992	115343	7.5 - 10	11-MAY-93	Beryllium	1.500	-	.62	mg/kg
1992	115346	17.5 - 20	11-MAY-93	Beryllium	1.400	-	.62	mg/kg
1992	115346	17.5 - 20	11-MAY-93	Potassium	2200.000	-	2007.519	mg/kg
1992	115346	17.5 - 20	11-MAY-93	Cadmium	1.300	-	.91	mg/kg
1992	115346	17.5 - 20	11-MAY-93	Cyanide	1.000	J	.17	mg/kg
1992	115346	17.5 - 20	11-MAY-93	Molybdenum	1.800	-	.27	mg/kg
1993	115339	2.5 - 5	11-MAY-93	Beryllium	.720	-	.62	mg/kg
1993	115339	2.5 - 5	11-MAY-93	Cadmium	1.100	-	.91	mg/kg
RADIONUCLIDES								
11036	115380	17 - 19	17-MAY-93	U-235/236	.750	J	.142	pCi/g
11036	115380	17 - 19	17-MAY-93	U-TOTAL	3.100	J	2.54	mg/kg
11036	115381	2.5 - 5	17-MAY-93	CS-137	.522	-	0	pCi/g
11036	115381	2.5 - 5	17-MAY-93	SR-90	1.990	J	.56	pCi/g
11036	115381	2.5 - 5	17-MAY-93	RA-228	6.650	-	1.325	pCi/g
11036	115381	2.5 - 5	17-MAY-93	U-238	577.000	-	1.122	pCi/g
11036	115381	2.5 - 5	17-MAY-93	U-235/236	28.900	-	.142	pCi/g
11036	115381	2.5 - 5	17-MAY-93	U-234	553.000	-	1.034	pCi/g
11036	115381	2.5 - 5	17-MAY-93	TH-TOTAL	75.600	-	9.47	mg/kg
11036	115381	2.5 - 5	17-MAY-93	TH-232	8.220	-	1.269	pCi/g
11036	115381	2.5 - 5	17-MAY-93	TH-230	720.000	-	1.897	pCi/g
11036	115381	2.5 - 5	17-MAY-93	TH-228	9.360	-	1.341	pCi/g
11036	115381	2.5 - 5	17-MAY-93	TC-99	5.130	J	0	pCi/g
11036	115381	2.5 - 5	17-MAY-93	U-TOTAL	1770.000	-	2.54	mg/kg
11036	115381	2.5 - 5	17-MAY-93	NP-237	1.670	N	0	pCi/g
11036	115381	2.5 - 5	17-MAY-93	PU-238	.337	J	0	pCi/g
11036	115381	2.5 - 5	17-MAY-93	PU-239/240	.022	J	0	pCi/g
11036	115381	2.5 - 5	17-MAY-93	RA-226	113.000	-	1.47	pCi/g
11037	115371	5 - 7.5	15-MAY-93	PU-238	.030	J	0	pCi/g
11037	115371	5 - 7.5	15-MAY-93	U-TOTAL	5.010	J	2.54	mg/kg
11037	115371	5 - 7.5	15-MAY-93	U-238	1.190	-	1.122	pCi/g
11037	115372	17.5 - 20	15-MAY-93	U-234	1.470	-	1.034	pCi/g
11037	115372	17.5 - 20	15-MAY-93	U-238	1.560	-	1.122	pCi/g
11037	115372	17.5 - 20	15-MAY-93	U-TOTAL	5.500	J	2.54	mg/kg
11038	115377	12.5 - 15	16-MAY-93	PU-238	.021	J	0	pCi/g
11038	115377	12.5 - 15	16-MAY-93	U-TOTAL	5.320	J	2.54	mg/kg
11039	115384	2.5 - 5	19-MAY-93	CS-137	.380	-	0	pCi/g
11039	115384	2.5 - 5	19-MAY-93	U-TOTAL	375.000	-	2.54	mg/kg
11039	115384	2.5 - 5	19-MAY-93	U-238	119.000	J	1.122	pCi/g
11039	115384	2.5 - 5	19-MAY-93	U-235/236	5.720	J	.142	pCi/g
11039	115384	2.5 - 5	19-MAY-93	U-234	97.000	J	1.034	pCi/g

TABLE C-2C
(Continued)

SAMPLE LOCATION	SAMPLE ID	SAMPLE INTERVALS	SAMPLE DATE	PARAMETER	RESULTS	VAL QUAL	BACKGROUND	UNITS
RADIONUCLIDES (Continued)								
11039	115384	2.5 - 5	19-MAY-93	TH-230	4.300	J	1.897	pCi/g
11039	115384	2.5 - 5	19-MAY-93	TC-99	.840	J	0	pCi/g
11039	115384	2.5 - 5	19-MAY-93	PU-239/240	.080	J	0	pCi/g
11039	115384	2.5 - 5	19-MAY-93	PU-238	.140	J	0	pCi/g
11039	115384	2.5 - 5	19-MAY-93	NP-237	.190	N	0	pCi/g
11039	115385	12 - 14	19-MAY-93	NP-237	.078	N	0	pCi/g
11039	115385	12 - 14	19-MAY-93	TH-232	5.160	-	1.269	pCi/g
11039	115385	12 - 14	19-MAY-93	U-234	1.100	J	1.034	pCi/g
11039	115385	12 - 14	19-MAY-93	TH-TOTAL	47.000	-	9.47	mg/kg
11039	115385	12 - 14	19-MAY-93	U-TOTAL	6.080	J	2.54	mg/kg
11039	115385	12 - 14	19-MAY-93	U-238	1.180	J	1.122	pCi/g
11039	115385	12 - 14	19-MAY-93	TH-230	4.700	-	1.897	pCi/g
11039	115385	12 - 14	19-MAY-93	TH-228	2.980	-	1.341	pCi/g
11039	115385	12 - 14	19-MAY-93	PU-238	.045	J	0	pCi/g
11040	115392	2.5 - 5	20-MAY-93	PU-238	.039	J	0	pCi/g
11040	115392	2.5 - 5	20-MAY-93	U-TOTAL	8.490	J	2.54	mg/kg
11040	115392	2.5 - 5	20-MAY-93	U-238	1.840	J	1.122	pCi/g
11040	115392	2.5 - 5	20-MAY-93	PU-239/240	.029	J	0	pCi/g
11040	115392	2.5 - 5	20-MAY-93	U-234	1.320	J	1.034	pCi/g
11041	115389	0 - 2.5	19-MAY-93	NP-237	.117	N	0	pCi/g
11041	115389	0 - 2.5	19-MAY-93	PU-238	.257	J	0	pCi/g
11041	115389	0 - 2.5	19-MAY-93	U-TOTAL	40.700	J	2.54	mg/kg
11041	115389	0 - 2.5	19-MAY-93	U-238	12.500	J	1.122	pCi/g
11041	115389	0 - 2.5	19-MAY-93	U-235/236	.382	J	.142	pCi/g
11041	115389	0 - 2.5	19-MAY-93	U-234	8.270	J	1.034	pCi/g
11041	115389	0 - 2.5	19-MAY-93	TH-TOTAL	16.000	-	9.47	mg/kg
11041	115389	0 - 2.5	19-MAY-93	TH-232	1.750	-	1.269	pCi/g
11041	115389	0 - 2.5	19-MAY-93	TH-228	2.090	-	1.341	pCi/g
11041	115389	0 - 2.5	19-MAY-93	TC-99	.754	J	0	pCi/g
11041	115389	0 - 2.5	19-MAY-93	RA-228	2.140	-	1.325	pCi/g
11041	115389	0 - 2.5	19-MAY-93	PU-239/240	.089	J	0	pCi/g
11041	115390	12.5 - 15	19-MAY-93	NP-237	.110	N	0	pCi/g
11041	115390	12.5 - 15	19-MAY-93	PU-239/240	.038	J	0	pCi/g
11041	115390	12.5 - 15	19-MAY-93	U-TOTAL	4.710	J	2.54	mg/kg
11041	115390	12.5 - 15	19-MAY-93	PU-238	.040	J	0	pCi/g
1982	111484	0 - 2.5	06-MAY-93	NP-237	.340	N	0	pCi/g
1982	111484	0 - 2.5	06-MAY-93	PU-238	.100	J	0	pCi/g
1982	111484	0 - 2.5	06-MAY-93	PU-239/240	.060	J	0	pCi/g
1982	111484	0 - 2.5	06-MAY-93	U-238	20.300	-	1.122	pCi/g
1982	111484	0 - 2.5	06-MAY-93	U-TOTAL	64.800	-	2.54	mg/kg
1982	111484	0 - 2.5	06-MAY-93	U-234	11.300	-	1.034	pCi/g
1982	111487	7.5 - 10	06-MAY-93	NP-237	.310	N	0	pCi/g

TABLE C-2C
(Continued)

SAMPLE LOCATION	SAMPLE ID	SAMPLE INTERVALS	SAMPLE DATE	PARAMETER	RESULTS	VAL QUAL	BACKGROUND	UNITS
RADIONUCLIDES (Continued)								
1982	111487	7.5 - 10	06-MAY-93	PU-239/240	.970	-	0	pCi/g
1982	111487	7.5 - 10	06-MAY-93	U-TOTAL	4.830	J	2.54	mg/kg
1982	111487	7.5 - 10	06-MAY-93	PU-238	.090	J	0	pCi/g
1983	111476	1.5 - 2.5	03-MAY-93	CS-137	.160	J	0	pCi/g
1983	111476	1.5 - 2.5	03-MAY-93	U-TOTAL	94.300	-	2.54	mg/kg
1983	111476	1.5 - 2.5	03-MAY-93	U-238	30.300	-	1.122	pCi/g
1983	111476	1.5 - 2.5	03-MAY-93	U-235/236	1.660	-	.142	pCi/g
1983	111476	1.5 - 2.5	03-MAY-93	U-234	32.000	-	1.034	pCi/g
1983	111476	1.5 - 2.5	03-MAY-93	TH-TOTAL	18.800	-	9.47	mg/kg
1983	111476	1.5 - 2.5	03-MAY-93	TH-232	2.070	-	1.269	pCi/g
1983	111476	1.5 - 2.5	03-MAY-93	TH-230	3.470	-	1.897	pCi/g
1983	111476	1.5 - 2.5	03-MAY-93	TH-228	2.690	-	1.341	pCi/g
1983	111476	1.5 - 2.5	03-MAY-93	RA-228	2.390	-	1.325	pCi/g
1983	111476	1.5 - 2.5	03-MAY-93	PU-239/240	.068	J	0	pCi/g
1983	111476	1.5 - 2.5	03-MAY-93	PU-238	.433	J	0	pCi/g
1983	111476	1.5 - 2.5	03-MAY-93	NP-237	.237	N	0	pCi/g
1983	111477	2.5 - 5	03-MAY-93	NP-237	.185	N	0	pCi/g
1983	111477	2.5 - 5	03-MAY-93	PU-239/240	.049	J	0	pCi/g
1983	111477	2.5 - 5	03-MAY-93	PU-238	.033	J	0	pCi/g
1983	111477	2.5 - 5	03-MAY-93	U-238	10.900	-	1.122	pCi/g
1983	111477	2.5 - 5	03-MAY-93	U-TOTAL	36.800	-	2.54	mg/kg
1983	111477	2.5 - 5	03-MAY-93	U-235/236	.220	J	.142	pCi/g
1983	111477	2.5 - 5	03-MAY-93	U-234	3.700	-	1.034	pCi/g
1983	111477	2.5 - 5	03-MAY-93	TH-230	4.260	-	1.897	pCi/g
1983	111480	17.5 - 20	05-MAY-93	NP-237	.280	N	0	pCi/g
1983	111480	17.5 - 20	05-MAY-93	PU-239/240	.080	J	0	pCi/g
1983	111480	17.5 - 20	05-MAY-93	U-TOTAL	3.180	J	2.54	mg/kg
1983	111480	17.5 - 20	05-MAY-93	PU-238	.040	J	0	pCi/g
1984	111466	2.5 - 5	01-MAY-93	NP-237	.050	N	0	pCi/g
1984	111466	2.5 - 5	01-MAY-93	PU-238	.027	J	0	pCi/g
1984	111466	2.5 - 5	01-MAY-93	PU-239/240	.110	J	0	pCi/g
1984	111466	2.5 - 5	01-MAY-93	U-234	1.639	J	1.034	pCi/g
1984	111466	2.5 - 5	01-MAY-93	U-238	1.730	J	1.122	pCi/g
1984	111466	2.5 - 5	01-MAY-93	U-TOTAL	13.300	J	2.54	mg/kg
1984	111468	12.5 - 15	01-MAY-93	NP-237	.047	N	0	pCi/g
1984	111468	12.5 - 15	01-MAY-93	PU-238	.040	J	0	pCi/g
1984	111468	12.5 - 15	01-MAY-93	U-234	1.110	J	1.034	pCi/g
1984	111468	12.5 - 15	01-MAY-93	U-TOTAL	12.700	J	2.54	mg/kg
1984	111468	12.5 - 15	01-MAY-93	U-238	1.240	J	1.122	pCi/g
1984	111468	12.5 - 15	01-MAY-93	PU-239/240	.680	-	0	pCi/g
1985	111441	2 - 4	26-APR-93	CS-137	.250	-	0	pCi/g
1985	111441	2 - 4	26-APR-93	U-TOTAL	62.300	-	2.54	mg/kg

000045

6508

TABLE C-2C
(Continued)

SAMPLE LOCATION	SAMPLE ID	SAMPLE INTERVALS	SAMPLE DATE	PARAMETER	RESULTS	VAL QUAL	BACKGROUND	UNITS
RADIONUCLIDES (Continued)								
1985	111441	2 - 4	26-APR-93	U-238	19.770	-	1.122	pCi/g
1985	111441	2 - 4	26-APR-93	U-235/236	.680	-	.142	pCi/g
1985	111441	2 - 4	26-APR-93	U-234	11.570	-	1.034	pCi/g
1985	111441	2 - 4	26-APR-93	TH-230	15.360	-	1.897	pCi/g
1985	111441	2 - 4	26-APR-93	RA-226	1.870	-	1.47	pCi/g
1985	111441	2 - 4	26-APR-93	PU-239/240	.049	J	0	pCi/g
1985	111441	2 - 4	26-APR-93	NP-237	.462	N	0	pCi/g
1985	111448	15 - 17	27-APR-93	NP-237	.099	N	0	pCi/g
1985	111448	15 - 17	27-APR-93	PU-238	.032	J	0	pCi/g
1985	111448	15 - 17	27-APR-93	SR-90	.670	J	.56	pCi/g
1985	111448	15 - 17	27-APR-93	TH-230	3.060	-	1.897	pCi/g
1985	111448	15 - 17	27-APR-93	U-TOTAL	5.910	-	2.54	mg/kg
1985	111448	15 - 17	27-APR-93	U-238	1.520	-	1.122	pCi/g
1985	111448	15 - 17	27-APR-93	U-234	1.210	-	1.034	pCi/g
1986	111458	12.5 - 15	30-APR-93	NP-237	.050	N	0	pCi/g
1986	111458	12.5 - 15	30-APR-93	U-TOTAL	11.400	J	2.54	mg/kg
1986	111458	12.5 - 15	30-APR-93	PU-239/240	1.670	-	0	pCi/g
1986	111458	12.5 - 15	30-APR-93	PU-238	.050	J	0	pCi/g
1987	115357	5 - 7.5	13-MAY-93	NP-237	.116	N	0	pCi/g
1987	115357	5 - 7.5	13-MAY-93	U-TOTAL	28.800	-	2.54	mg/kg
1987	115357	5 - 7.5	13-MAY-93	U-238	9.350	-	1.122	pCi/g
1987	115357	5 - 7.5	13-MAY-93	U-235/236	.301	J	.142	pCi/g
1987	115357	5 - 7.5	13-MAY-93	U-234	3.560	-	1.034	pCi/g
1987	115357	5 - 7.5	13-MAY-93	PU-238	.019	J	0	pCi/g
1987	115357	5 - 7.5	13-MAY-93	TH-TOTAL	9.750	-	9.47	mg/kg
1987	115357	5 - 7.5	13-MAY-93	RA-228	1.370	-	1.325	pCi/g
1987	115359	12.5 - 15	13-MAY-93	U-TOTAL	3.940	J	2.54	mg/kg
1988	115350	2.5 - 5	12-MAY-93	CS-137	.091	J	0	pCi/g
1988	115350	2.5 - 5	12-MAY-93	U-TOTAL	109.000	-	2.54	mg/kg
1988	115350	2.5 - 5	12-MAY-93	U-238	37.800	-	1.122	pCi/g
1988	115350	2.5 - 5	12-MAY-93	U-235/236	1.430	-	.142	pCi/g
1988	115350	2.5 - 5	12-MAY-93	U-234	24.600	-	1.034	pCi/g
1988	115350	2.5 - 5	12-MAY-93	TH-TOTAL	17.800	-	9.47	mg/kg
1988	115350	2.5 - 5	12-MAY-93	TH-232	1.960	-	1.269	pCi/g
1988	115350	2.5 - 5	12-MAY-93	TH-230	2.330	-	1.897	pCi/g
1988	115350	2.5 - 5	12-MAY-93	TH-228	1.920	-	1.341	pCi/g
1988	115350	2.5 - 5	12-MAY-93	RA-228	2.560	-	1.325	pCi/g
1988	115350	2.5 - 5	12-MAY-93	PU-239/240	.056	J	0	pCi/g
1988	115350	2.5 - 5	12-MAY-93	PU-238	.328	J	0	pCi/g
1988	115350	2.5 - 5	12-MAY-93	NP-237	.101	N	0	pCi/g
1988	115351	17.5 - 20	12-MAY-93	PU-238	.015	J	0	pCi/g
1988	115351	17.5 - 20	12-MAY-93	PU-239/240	.015	J	0	pCi/g

000946

TABLE C-2C
(Continued)

SAMPLE LOCATION	SAMPLE ID	SAMPLE INTERVALS	SAMPLE DATE	PARAMETER	RESULTS	VAL QUAL	BACKGROUND	UNITS
RADIONUCLIDES (Continued)								
1988	115351	17.5 - 20	12-MAY-93	U-TOTAL	3.620	J	2.54	mg/kg
1989	115362	2.5 - 5	14-MAY-93	PU-238	.060	J	0	pCi/g
1989	115362	2.5 - 5	14-MAY-93	U-TOTAL	33.500	-	2.54	mg/kg
1989	115362	2.5 - 5	14-MAY-93	U-238	10.600	-	1.122	pCi/g
1989	115362	2.5 - 5	14-MAY-93	U-235/236	.370	J	.142	pCi/g
1989	115362	2.5 - 5	14-MAY-93	U-234	5.660	-	1.034	pCi/g
1989	115363	12.5 - 15	14-MAY-93	SR-90	.710	J	.56	pCi/g
1989	115363	12.5 - 15	14-MAY-93	U-TOTAL	5.150	J	2.54	mg/kg
1990	115329	6 - 9	10-MAY-93	NP-237	.140	N	0	pCi/g
1990	115329	6 - 9	10-MAY-93	PU-239/240	.055	J	0	pCi/g
1990	115329	6 - 9	10-MAY-93	TH-230	3.420	J	1.897	pCi/g
1990	115329	6 - 9	10-MAY-93	TH-TOTAL	12.600	J	9.47	mg/kg
1990	115329	6 - 9	10-MAY-93	U-TOTAL	446.000	-	2.54	mg/kg
1990	115329	6 - 9	10-MAY-93	U-238	170.000	-	1.122	pCi/g
1990	115329	6 - 9	10-MAY-93	U-235/236	8.040	-	.142	pCi/g
1990	115329	6 - 9	10-MAY-93	U-234	71.200	-	1.034	pCi/g
1990	115329	6 - 9	10-MAY-93	TH-232	1.370	J	1.269	pCi/g
1990	115329	6 - 9	10-MAY-93	TH-228	1.400	J	1.341	pCi/g
1990	115329	6 - 9	10-MAY-93	RA-228	1.350	-	1.325	pCi/g
1990	115329	6 - 9	10-MAY-93	PU-238	.232	J	0	pCi/g
1990	115335	17.5 - 20	10-MAY-93	NP-237	.116	N	0	pCi/g
1990	115335	17.5 - 20	10-MAY-93	U-TOTAL	3.060	J	2.54	mg/kg
1990	115335	17.5 - 20	10-MAY-93	PU-239/240	.666	J	0	pCi/g
1990	115335	17.5 - 20	10-MAY-93	PU-238	.043	J	0	pCi/g
1991	115319	7.5 - 10	06-MAY-93	NP-237	.250	N	0	pCi/g
1991	115319	7.5 - 10	06-MAY-93	PU-239/240	.030	J	0	pCi/g
1991	115319	7.5 - 10	06-MAY-93	PU-238	.060	J	0	pCi/g
1991	115319	7.5 - 10	06-MAY-93	U-234	2.610	J	1.034	pCi/g
1991	115319	7.5 - 10	06-MAY-93	U-238	6.270	J	1.122	pCi/g
1991	115319	7.5 - 10	06-MAY-93	U-TOTAL	25.400	J	2.54	mg/kg
1991	115319	7.5 - 10	06-MAY-93	U-235/236	.200	J	.142	pCi/g
1991	115321	12 - 15	06-MAY-93	NP-237	.300	N	0	pCi/g
1991	115321	12 - 15	06-MAY-93	PU-239/240	.070	J	0	pCi/g
1991	115321	12 - 15	06-MAY-93	U-TOTAL	3.240	J	2.54	mg/kg
1991	115321	12 - 15	06-MAY-93	PU-238	.070	J	0	pCi/g
1992	115343	7.5 - 10	11-MAY-93	CS-137	.101	J	0	pCi/g
1992	115343	7.5 - 10	11-MAY-93	NP-237	.117	N	0	pCi/g
1992	115343	7.5 - 10	11-MAY-93	PU-238	.102	J	0	pCi/g
1992	115343	7.5 - 10	11-MAY-93	U-TOTAL	191.000	-	2.54	mg/kg
1992	115343	7.5 - 10	11-MAY-93	U-238	60.400	-	1.122	pCi/g
1992	115343	7.5 - 10	11-MAY-93	U-235/236	1.140	-	.142	pCi/g
1992	115343	7.5 - 10	11-MAY-93	U-234	18.200	-	1.034	pCi/g

TABLE C-2C
(Continued)

SAMPLE LOCATION	SAMPLE ID	SAMPLE INTERVALS	SAMPLE DATE	PARAMETER	RESULTS	VAL QUAL	BACKGROUND	UNITS
RADIONUCLIDES (Continued)								
1992	115343	7.5 - 10	11-MAY-93	TH-TOTAL	12.000	J	9.47	mg/kg
1992	115343	7.5 - 10	11-MAY-93	TH-232	1.320	J	1.269	pCi/g
1992	115343	7.5 - 10	11-MAY-93	TH-230	2.050	J	1.897	pCi/g
1992	115343	7.5 - 10	11-MAY-93	TH-228	1.510	J	1.341	pCi/g
1992	115343	7.5 - 10	11-MAY-93	RA-228	1.390	-	1.325	pCi/g
1992	115343	7.5 - 10	11-MAY-93	PU-239/240	.036	J	0	pCi/g
1992	115346	17.5 - 20	11-MAY-93	NP-237	.351	N	0	pCi/g
1992	115346	17.5 - 20	11-MAY-93	PU-239/240	.112	J	0	pCi/g
1992	115346	17.5 - 20	11-MAY-93	U-TOTAL	3.500	-	2.54	mg/kg
1992	115346	17.5 - 20	11-MAY-93	U-238	1.170	-	1.122	pCi/g
1993	115339	2.5 - 5	11-MAY-93	NP-237	.252	N	0	pCi/g
1993	115339	2.5 - 5	11-MAY-93	PU-238	.023	J	0	pCi/g
1993	115339	2.5 - 5	11-MAY-93	PU-239/240	.023	J	0	pCi/g
1993	115339	2.5 - 5	11-MAY-93	U-234	7.330	-	1.034	pCi/g
1993	115339	2.5 - 5	11-MAY-93	U-238	15.300	-	1.122	pCi/g
1993	115339	2.5 - 5	11-MAY-93	U-TOTAL	38.900	-	2.54	mg/kg
1993	115339	2.5 - 5	11-MAY-93	U-235/236	.382	J	.142	pCi/g
1993	115339	2.5 - 5	11-MAY-93	TH-230	6.720	-	1.897	pCi/g
1993	115340	15 - 17.5	11-MAY-93	NP-237	.087	N	0	pCi/g
1993	115340	15 - 17.5	11-MAY-93	PU-238	.034	J	0	pCi/g
1993	115340	15 - 17.5	11-MAY-93	U-TOTAL	3.020	-	2.54	mg/kg
VOLATILE ORGANICS								
11036	115380	17 - 19	17-MAY-93	1,1-Dichloroethane	1.000	J	0	ug/kg
11036	115380	17 - 19	17-MAY-93	Toluene	13.000	-	0	ug/kg
11036	115381	2.5 - 5	17-MAY-93	1,1-Dichloroethane	55.000	-	0	ug/kg
11036	115381	2.5 - 5	17-MAY-93	Ethylbenzene	15.000	-	0	ug/kg
11036	115381	2.5 - 5	17-MAY-93	2-Butanone	13.000	-	0	ug/kg
11036	115381	2.5 - 5	17-MAY-93	Benzene	4.000	J	0	ug/kg
11036	115381	2.5 - 5	17-MAY-93	Vinyl chloride	2.000	J	0	ug/kg
11036	115381	2.5 - 5	17-MAY-93	Xylenes, Total	54.000	-	0	ug/kg
11036	115381	2.5 - 5	17-MAY-93	Toluene	4.000	J	0	ug/kg
11036	115381	2.5 - 5	17-MAY-93	Tetrachloroethene	2.000	J	0	ug/kg
11036	115381	2.5 - 5	17-MAY-93	Acetone	64.000	-	0	ug/kg
11037	115372	17.5 - 20	15-MAY-93	2-Hexanone	2.000	J	0	ug/kg
11037	115372	17.5 - 20	15-MAY-93	4-Methyl-2-pentanone	20.000	-	0	ug/kg
11037	115372	17.5 - 20	15-MAY-93	Acetone	6.000	J	0	ug/kg
11037	115372	17.5 - 20	15-MAY-93	Xylenes, Total	23.000	-	0	ug/kg
11037	115372	17.5 - 20	15-MAY-93	Toluene	4.000	J	0	ug/kg
11037	115372	17.5 - 20	15-MAY-93	Ethylbenzene	7.000	J	0	ug/kg
11038	115377	12.5 - 15	16-MAY-93	Toluene	5.000	J	0	ug/kg
11039	115384	2.5 - 5	19-MAY-93	2-Butanone	110.000	-	0	ug/kg

TABLE C-2C
(Continued)

SAMPLE LOCATION	SAMPLE ID	SAMPLE INTERVALS	SAMPLE DATE	PARAMETER	RESULTS	VAL QUAL	BACKGROUND	UNITS
VOLATILE ORGANICS (Continued)								
11039	115384	2.5 - 5	19-MAY-93	Ethylbenzene	2.000	J	0	ug/kg
11039	115384	2.5 - 5	19-MAY-93	2-Hexanone	1.000	J	0	ug/kg
11039	115384	2.5 - 5	19-MAY-93	Toluene	1.000	J	0	ug/kg
11039	115384	2.5 - 5	19-MAY-93	Acetone	88.000	-	0	ug/kg
11039	115385	12 - 14	19-MAY-93	Toluene	54.000	-	0	ug/kg
11041	115389	0 - 2.5	19-MAY-93	Toluene	2.000	J	0	ug/kg
11041	115390	12.5 - 15	19-MAY-93	Toluene	2.000	J	0	ug/kg
1982	111484	0 - 2.5	06-MAY-93	Toluene	2.000	J	0	ug/kg
1982	111487	7.5 - 10	06-MAY-93	Toluene	1.000	J	0	ug/kg
1983	111477	2.5 - 5	03-MAY-93	Toluene	2.000	J	0	ug/kg
1983	111480	17.5 - 20	05-MAY-93	Carbon disulfide	2.000	J	0	ug/kg
1984	111466	2.5 - 5	01-MAY-93	Toluene	2.000	J	0	ug/kg
1984	111468	12.5 - 15	01-MAY-93	Toluene	2.000	J	0	ug/kg
1986	111452	2.5 - 5	28-APR-93	Toluene	1.000	J	0	ug/kg
1986	111458	12.5 - 15	30-APR-93	Acetone	9.000	J	0	ug/kg
1988	115350	2.5 - 5	12-MAY-93	1,2-Dichloroethene	2.000	J	0	ug/kg
1988	115350	2.5 - 5	12-MAY-93	Benzene	3.000	J	0	ug/kg
1988	115350	2.5 - 5	12-MAY-93	Xylenes, Total	260.000	-	0	ug/kg
1988	115350	2.5 - 5	12-MAY-93	Ethylbenzene	76.000	-	0	ug/kg
1988	115350	2.5 - 5	12-MAY-93	4-Methyl-2-pentanone	3.000	J	0	ug/kg
1988	115351	17.5 - 20	12-MAY-93	Xylenes, Total	1.000	J	0	ug/kg
1989	115363	12.5 - 15	14-MAY-93	Toluene	3.000	J	0	ug/kg
1990	115335	17.5 - 20	10-MAY-93	Toluene	5.000	J	0	ug/kg
1992	115343	7.5 - 10	11-MAY-93	Tetrachloroethene	1.000	J	0	ug/kg
2951	111432	0 - 5.1	21-APR-93	Acetone	15.000	J	0	ug/kg
SEMIVOLATILE ORGANICS								
11036	115380	17 - 19	17-MAY-93	bis(2-Ethylhexyl) phthalate	1600.000	-	0	ug/kg
11036	115381	2.5 - 5	17-MAY-93	Anthracene	80.000	J	0	ug/kg
11036	115381	2.5 - 5	17-MAY-93	Benzo(a)pyrene	230.000	J	0	ug/kg
11036	115381	2.5 - 5	17-MAY-93	Benzo(g,h,i)perylene	130.000	J	0	ug/kg
11036	115381	2.5 - 5	17-MAY-93	Chrysene	350.000	J	0	ug/kg
11036	115381	2.5 - 5	17-MAY-93	Indeno(1,2,3-cd)pyrene	130.000	J	0	ug/kg
11036	115381	2.5 - 5	17-MAY-93	Pyrene	490.000	J	0	ug/kg
11036	115381	2.5 - 5	17-MAY-93	Phenanthrene	340.000	J	0	ug/kg
11036	115381	2.5 - 5	17-MAY-93	Fluoranthene	630.000	J	0	ug/kg
11036	115381	2.5 - 5	17-MAY-93	Benzo(b)fluoranthene	340.000	J	0	ug/kg
11036	115381	2.5 - 5	17-MAY-93	Benzo(a)anthracene	280.000	J	0	ug/kg
11037	115371	5 - 7.5	15-MAY-93	Benzo(a)anthracene	48.000	J	0	ug/kg
11037	115371	5 - 7.5	15-MAY-93	Benzo(b)fluoranthene	67.000	J	0	ug/kg
11037	115371	5 - 7.5	15-MAY-93	Pyrene	72.000	J	0	ug/kg

TABLE C-2C
(Continued)

SAMPLE LOCATION	SAMPLE ID	SAMPLE INTERVALS	SAMPLE DATE	PARAMETER	RESULTS	VAL QUAL	BACKGROUND	UNITS
SEMIVOLATILE ORGANICS (Continued)								
11037	115371	5 - 7.5	15-MAY-93	Fluoranthene	89.000	J	0	ug/kg
11037	115371	5 - 7.5	15-MAY-93	Chrysene	48.000	J	0	ug/kg
11037	115372	17.5 - 20	15-MAY-93	Di-n-octyl phthalate	55.000	J	0	ug/kg
11038	115376	0 - 2.5	16-MAY-93	Anthracene	73.000	J	0	ug/kg
11038	115376	0 - 2.5	16-MAY-93	Benzo(a)pyrene	300.000	J	0	ug/kg
11038	115376	0 - 2.5	16-MAY-93	Benzo(g,h,i)perylene	200.000	J	0	ug/kg
11038	115376	0 - 2.5	16-MAY-93	Indeno(1,2,3-cd)pyrene	210.000	J	0	ug/kg
11038	115376	0 - 2.5	16-MAY-93	Pyrene	630.000	-	0	ug/kg
11038	115376	0 - 2.5	16-MAY-93	Phenanthrene	400.000	-	0	ug/kg
11038	115376	0 - 2.5	16-MAY-93	Fluoranthene	780.000	-	0	ug/kg
11038	115376	0 - 2.5	16-MAY-93	Dibenzo(a,h)anthracene	96.000	J	0	ug/kg
11038	115376	0 - 2.5	16-MAY-93	Chrysene	400.000	-	0	ug/kg
11038	115376	0 - 2.5	16-MAY-93	Benzo(k)fluoranthene	360.000	J	0	ug/kg
11038	115376	0 - 2.5	16-MAY-93	Benzo(b)fluoranthene	300.000	J	0	ug/kg
11038	115376	0 - 2.5	16-MAY-93	Benzo(a)anthracene	300.000	J	0	ug/kg
11039	115384	2.5 - 5	19-MAY-93	2-Methylnaphthalene	46000.000	-	0	ug/kg
11039	115384	2.5 - 5	19-MAY-93	Fluorene	180000.000	J	0	ug/kg
11039	115384	2.5 - 5	19-MAY-93	Fluoranthene	790000.000	-	0	ug/kg
11039	115384	2.5 - 5	19-MAY-93	Dibenzofuran	120000.000	-	0	ug/kg
11039	115384	2.5 - 5	19-MAY-93	Dibenzo(a,h)anthracene	79000.000	-	0	ug/kg
11039	115384	2.5 - 5	19-MAY-93	Chrysene	310000.000	-	0	ug/kg
11039	115384	2.5 - 5	19-MAY-93	Carbazole	89000.000	-	0	ug/kg
11039	115384	2.5 - 5	19-MAY-93	Benzo(k)fluoranthene	140000.000	-	0	ug/kg
11039	115384	2.5 - 5	19-MAY-93	Benzo(g,h,i)perylene	150000.000	-	0	ug/kg
11039	115384	2.5 - 5	19-MAY-93	Benzo(b)fluoranthene	220000.000	-	0	ug/kg
11039	115384	2.5 - 5	19-MAY-93	Benzo(a)pyrene	260000.000	-	0	ug/kg
11039	115384	2.5 - 5	19-MAY-93	Pyrene	610000.000	-	0	ug/kg
11039	115384	2.5 - 5	19-MAY-93	Phenanthrene	900000.000	-	0	ug/kg
11039	115384	2.5 - 5	19-MAY-93	Naphthalene	96000.000	-	0	ug/kg
11039	115384	2.5 - 5	19-MAY-93	Indeno(1,2,3-cd)pyrene	150000.000	-	0	ug/kg
11039	115384	2.5 - 5	19-MAY-93	Benzo(a)anthracene	310000.000	-	0	ug/kg
11039	115384	2.5 - 5	19-MAY-93	Anthracene	250000.000	-	0	ug/kg
11039	115384	2.5 - 5	19-MAY-93	Acenaphthylene	2500.000	J	0	ug/kg
11039	115384	2.5 - 5	19-MAY-93	Acenaphthene	140000.000	-	0	ug/kg
11039	115385	12 - 14	19-MAY-93	2-Methylnaphthalene	100.000	J	0	ug/kg
11039	115385	12 - 14	19-MAY-93	Anthracene	580.000	-	0	ug/kg
11039	115385	12 - 14	19-MAY-93	Benzo(a)anthracene	1000.000	-	0	ug/kg
11039	115385	12 - 14	19-MAY-93	Acenaphthene	370.000	J	0	ug/kg
11039	115385	12 - 14	19-MAY-93	Naphthalene	320.000	J	0	ug/kg
11039	115385	12 - 14	19-MAY-93	Indeno(1,2,3-cd)pyrene	410.000	J	0	ug/kg
11039	115385	12 - 14	19-MAY-93	Fluorene	430.000	-	0	ug/kg
11039	115385	12 - 14	19-MAY-93	Fluoranthene	2400.000	-	0	ug/kg

TABLE C-2C
(Continued)

SAMPLE LOCATION	SAMPLE ID	SAMPLE INTERVALS	SAMPLE DATE	PARAMETER	RESULTS	VAL QUAL	BACKGROUND	UNITS
SEMIVOLATILE ORGANICS (Continued)								
11039	115385	12 - 14	19-MAY-93	Dibenzofuran	260.000	J	0	ug/kg
11039	115385	12 - 14	19-MAY-93	Dibenzo(a,h)anthracene	180.000	J	0	ug/kg
11039	115385	12 - 14	19-MAY-93	Chrysene	920.000	-	0	ug/kg
11039	115385	12 - 14	19-MAY-93	Carbazole	210.000	J	0	ug/kg
11039	115385	12 - 14	19-MAY-93	Benzo(k)fluoranthene	740.000	-	0	ug/kg
11039	115385	12 - 14	19-MAY-93	Pyrene	1900.000	-	0	ug/kg
11039	115385	12 - 14	19-MAY-93	Phenanthrene	2600.000	-	0	ug/kg
11039	115385	12 - 14	19-MAY-93	Benzo(g,h,i)perylene	380.000	J	0	ug/kg
11039	115385	12 - 14	19-MAY-93	Benzo(b)fluoranthene	1200.000	-	0	ug/kg
11039	115385	12 - 14	19-MAY-93	Benzo(a)pyrene	760.000	-	0	ug/kg
11040	115392	2.5 - 5	20-MAY-93	Anthracene	100.000	J	0	ug/kg
11040	115392	2.5 - 5	20-MAY-93	Benzo(a)pyrene	320.000	J	0	ug/kg
11040	115392	2.5 - 5	20-MAY-93	Benzo(a)anthracene	350.000	J	0	ug/kg
11040	115392	2.5 - 5	20-MAY-93	Benzo(k)fluoranthene	290.000	J	0	ug/kg
11040	115392	2.5 - 5	20-MAY-93	Benzo(b)fluoranthene	290.000	J	0	ug/kg
11040	115392	2.5 - 5	20-MAY-93	bis(2-Ethylhexyl) phthalate	48.000	J	0	ug/kg
11040	115392	2.5 - 5	20-MAY-93	Pyrene	640.000	-	0	ug/kg
11040	115392	2.5 - 5	20-MAY-93	Phenanthrene	440.000	-	0	ug/kg
11040	115392	2.5 - 5	20-MAY-93	Indeno(1,2,3-cd)pyrene	200.000	J	0	ug/kg
11040	115392	2.5 - 5	20-MAY-93	Fluoranthene	770.000	-	0	ug/kg
11040	115392	2.5 - 5	20-MAY-93	Dibenzo(a,h)anthracene	96.000	J	0	ug/kg
11040	115392	2.5 - 5	20-MAY-93	Chrysene	370.000	J	0	ug/kg
11040	115392	2.5 - 5	20-MAY-93	Carbazole	58.000	J	0	ug/kg
11040	115392	2.5 - 5	20-MAY-93	Benzo(g,h,i)perylene	190.000	J	0	ug/kg
11041	115389	0 - 2.5	19-MAY-93	Acenaphthene	5800.000	-	0	ug/kg
11041	115389	0 - 2.5	19-MAY-93	Benzo(a)pyrene	13000.000	-	0	ug/kg
11041	115389	0 - 2.5	19-MAY-93	Dibenzo(a,h)anthracene	3000.000	J	0	ug/kg
11041	115389	0 - 2.5	19-MAY-93	Pyrene	38000.000	-	0	ug/kg
11041	115389	0 - 2.5	19-MAY-93	Phenanthrene	48000.000	-	0	ug/kg
11041	115389	0 - 2.5	19-MAY-93	Naphthalene	1700.000	J	0	ug/kg
11041	115389	0 - 2.5	19-MAY-93	Indeno(1,2,3-cd)pyrene	6500.000	-	0	ug/kg
11041	115389	0 - 2.5	19-MAY-93	Fluorene	6000.000	-	0	ug/kg
11041	115389	0 - 2.5	19-MAY-93	Fluoranthene	48000.000	-	0	ug/kg
11041	115389	0 - 2.5	19-MAY-93	Dibenzofuran	3000.000	J	0	ug/kg
11041	115389	0 - 2.5	19-MAY-93	Benzo(k)fluoranthene	25000.000	-	0	ug/kg
11041	115389	0 - 2.5	19-MAY-93	Chrysene	18000.000	-	0	ug/kg
11041	115389	0 - 2.5	19-MAY-93	Carbazole	4200.000	-	0	ug/kg
11041	115389	0 - 2.5	19-MAY-93	Benzo(g,h,i)perylene	5800.000	-	0	ug/kg
11041	115389	0 - 2.5	19-MAY-93	Anthracene	9700.000	-	0	ug/kg
11041	115389	0 - 2.5	19-MAY-93	Benzo(a)anthracene	18000.000	-	0	ug/kg
1982	111484	0 - 2.5	06-MAY-93	Acenaphthene	55.000	J	0	ug/kg
1982	111484	0 - 2.5	06-MAY-93	Indeno(1,2,3-cd)pyrene	91.000	J	0	ug/kg

TABLE C-2C
(Continued)

SAMPLE LOCATION	SAMPLE ID	SAMPLE INTERVALS	SAMPLE DATE	PARAMETER	RESULTS	VAL QUAL	BACKGROUND	UNITS
SEMIVOLATILE ORGANICS (Continued)								
1982	111484	0 - 2.5	06-MAY-93	Fluorene	46.000	J	0	ug/kg
1982	111484	0 - 2.5	06-MAY-93	Fluoranthene	480.000	-	0	ug/kg
1982	111484	0 - 2.5	06-MAY-93	Dibenzo(a,h)anthracene	40.000	J	0	ug/kg
1982	111484	0 - 2.5	06-MAY-93	Chrysene	200.000	J	0	ug/kg
1982	111484	0 - 2.5	06-MAY-93	Benzo(k)fluoranthene	120.000	J	0	ug/kg
1982	111484	0 - 2.5	06-MAY-93	Benzo(g,h,i)perylene	86.000	J	0	ug/kg
1982	111484	0 - 2.5	06-MAY-93	Benzo(b)fluoranthene	180.000	J	0	ug/kg
1982	111484	0 - 2.5	06-MAY-93	Benzo(a)pyrene	120.000	J	0	ug/kg
1982	111484	0 - 2.5	06-MAY-93	bis(2-Ethylhexyl) phthalate	260.000	J	0	ug/kg
1982	111484	0 - 2.5	06-MAY-93	Pyrene	350.000	J	0	ug/kg
1982	111484	0 - 2.5	06-MAY-93	Phenanthrene	410.000	-	0	ug/kg
1982	111484	0 - 2.5	06-MAY-93	Benzo(a)anthracene	170.000	J	0	ug/kg
1982	111484	0 - 2.5	06-MAY-93	Anthracene	77.000	J	0	ug/kg
1982	111487	7.5 - 10	06-MAY-93	bis(2-Ethylhexyl) phthalate	250.000	J	0	ug/kg
1983	111476	1.5 - 2.5	03-MAY-93	Benzo(a)anthracene	49.000	J	0	ug/kg
1983	111476	1.5 - 2.5	03-MAY-93	Benzo(a)pyrene	47.000	J	0	ug/kg
1983	111476	1.5 - 2.5	03-MAY-93	bis(2-Ethylhexyl) phthalate	3200.000	-	0	ug/kg
1983	111476	1.5 - 2.5	03-MAY-93	Pyrene	120.000	J	0	ug/kg
1983	111476	1.5 - 2.5	03-MAY-93	Phenanthrene	66.000	J	0	ug/kg
1983	111476	1.5 - 2.5	03-MAY-93	Fluoranthene	130.000	J	0	ug/kg
1983	111476	1.5 - 2.5	03-MAY-93	Benzo(k)fluoranthene	56.000	J	0	ug/kg
1983	111476	1.5 - 2.5	03-MAY-93	Benzo(b)fluoranthene	49.000	J	0	ug/kg
1983	111477	2.5 - 5	03-MAY-93	Benzo(a)anthracene	78.000	J	0	ug/kg
1983	111477	2.5 - 5	03-MAY-93	Pyrene	170.000	J	0	ug/kg
1983	111477	2.5 - 5	03-MAY-93	Phenanthrene	120.000	J	0	ug/kg
1983	111477	2.5 - 5	03-MAY-93	Indeno(1,2,3-cd)pyrene	45.000	J	0	ug/kg
1983	111477	2.5 - 5	03-MAY-93	Fluoranthene	190.000	J	0	ug/kg
1983	111477	2.5 - 5	03-MAY-93	Chrysene	99.000	J	0	ug/kg
1983	111477	2.5 - 5	03-MAY-93	Benzo(k)fluoranthene	97.000	J	0	ug/kg
1983	111477	2.5 - 5	03-MAY-93	Benzo(b)fluoranthene	66.000	J	0	ug/kg
1983	111477	2.5 - 5	03-MAY-93	Benzo(a)pyrene	64.000	J	0	ug/kg
1983	111477	2.5 - 5	03-MAY-93	bis(2-Ethylhexyl) phthalate	67.000	J	0	ug/kg
1984	111466	2.5 - 5	01-MAY-93	Fluoranthene	46.000	J	0	ug/kg
1984	111466	2.5 - 5	01-MAY-93	bis(2-Ethylhexyl) phthalate	700.000	-	0	ug/kg
1984	111466	2.5 - 5	01-MAY-93	Pyrene	44.000	J	0	ug/kg
1984	111468	12.5 - 15	01-MAY-93	bis(2-Ethylhexyl) phthalate	1000.000	-	0	ug/kg
1985	111441	2 - 4	26-APR-93	Acenaphthene	93.000	J	0	ug/kg
1985	111441	2 - 4	26-APR-93	Benzo(b)fluoranthene	1100.000	J	0	ug/kg
1985	111441	2 - 4	26-APR-93	Carbazole	67.000	J	0	ug/kg
1985	111441	2 - 4	26-APR-93	Dibenzofuran	38.000	J	0	ug/kg
1985	111441	2 - 4	26-APR-93	Dibenzo(a,h)anthracene	250.000	J	0	ug/kg
1985	111441	2 - 4	26-APR-93	bis(2-Ethylhexyl) phthalate	2500.000	J	0	ug/kg

TABLE C-2C
(Continued)

SAMPLE LOCATION	SAMPLE ID	SAMPLE INTERVALS	SAMPLE DATE	PARAMETER	RESULTS	VAL QUAL	BACKGROUND	UNITS
SEMIVOLATILE ORGANICS (Continued)								
1985	111441	2 - 4	26-APR-93	Pyrene	1500.000	J	0	ug/kg
1985	111441	2 - 4	26-APR-93	Phenanthrene	970.000	J	0	ug/kg
1985	111441	2 - 4	26-APR-93	Indeno(1,2,3-cd)pyrene	520.000	J	0	ug/kg
1985	111441	2 - 4	26-APR-93	Fluorene	83.000	J	0	ug/kg
1985	111441	2 - 4	26-APR-93	Fluoranthene	1700.000	J	0	ug/kg
1985	111441	2 - 4	26-APR-93	Chrysene	940.000	J	0	ug/kg
1985	111441	2 - 4	26-APR-93	Benzo(k)fluoranthene	700.000	J	0	ug/kg
1985	111441	2 - 4	26-APR-93	Benzo(g,h,i)perylene	420.000	J	0	ug/kg
1985	111441	2 - 4	26-APR-93	Benzo(a)anthracene	1100.000	J	0	ug/kg
1985	111441	2 - 4	26-APR-93	Benzo(a)pyrene	790.000	J	0	ug/kg
1985	111441	2 - 4	26-APR-93	Anthracene	180.000	J	0	ug/kg
1985	111448	15 - 17	27-APR-93	bis(2-Ethylhexyl) phthalate	1700.000	J	0	ug/kg
1986	111452	2.5 - 5	28-APR-93	Acenaphthene	83.000	J	0	ug/kg
1986	111452	2.5 - 5	28-APR-93	Pyrene	1100.000	J	0	ug/kg
1986	111452	2.5 - 5	28-APR-93	Phenanthrene	1100.000	J	0	ug/kg
1986	111452	2.5 - 5	28-APR-93	Indeno(1,2,3-cd)pyrene	230.000	J	0	ug/kg
1986	111452	2.5 - 5	28-APR-93	Fluorene	80.000	J	0	ug/kg
1986	111452	2.5 - 5	28-APR-93	Fluoranthene	1300.000	J	0	ug/kg
1986	111452	2.5 - 5	28-APR-93	Dibenzofuran	39.000	J	0	ug/kg
1986	111452	2.5 - 5	28-APR-93	Dibenzo(a,h)anthracene	120.000	J	0	ug/kg
1986	111452	2.5 - 5	28-APR-93	Chrysene	550.000	J	0	ug/kg
1986	111452	2.5 - 5	28-APR-93	Carbazole	68.000	J	0	ug/kg
1986	111452	2.5 - 5	28-APR-93	Benzo(k)fluoranthene	370.000	J	0	ug/kg
1986	111452	2.5 - 5	28-APR-93	Benzo(g,h,i)perylene	90.000	J	0	ug/kg
1986	111452	2.5 - 5	28-APR-93	Benzo(b)fluoranthene	480.000	J	0	ug/kg
1986	111452	2.5 - 5	28-APR-93	Benzo(a)pyrene	320.000	J	0	ug/kg
1986	111452	2.5 - 5	28-APR-93	Benzo(a)anthracene	490.000	J	0	ug/kg
1986	111452	2.5 - 5	28-APR-93	Anthracene	140.000	J	0	ug/kg
1986	111458	12.5 - 15	30-APR-93	bis(2-Ethylhexyl) phthalate	950.000	-	0	ug/kg
1987	115357	5 - 7.5	13-MAY-93	2-Methylnaphthalene	97.000	J	0	ug/kg
1987	115357	5 - 7.5	13-MAY-93	bis(2-Ethylhexyl) phthalate	710.000	-	0	ug/kg
1987	115357	5 - 7.5	13-MAY-93	Pyrene	1300.000	-	0	ug/kg
1987	115357	5 - 7.5	13-MAY-93	Phenanthrene	1700.000	-	0	ug/kg
1987	115357	5 - 7.5	13-MAY-93	Naphthalene	120.000	J	0	ug/kg
1987	115357	5 - 7.5	13-MAY-93	Indeno(1,2,3-cd)pyrene	440.000	-	0	ug/kg
1987	115357	5 - 7.5	13-MAY-93	Fluorene	280.000	J	0	ug/kg
1987	115357	5 - 7.5	13-MAY-93	Fluoranthene	1900.000	-	0	ug/kg
1987	115357	5 - 7.5	13-MAY-93	Dibenzofuran	160.000	J	0	ug/kg
1987	115357	5 - 7.5	13-MAY-93	Dibenzo(a,h)anthracene	110.000	J	0	ug/kg
1987	115357	5 - 7.5	13-MAY-93	Chrysene	740.000	-	0	ug/kg
1987	115357	5 - 7.5	13-MAY-93	Carbazole	240.000	J	0	ug/kg
1987	115357	5 - 7.5	13-MAY-93	Benzo(k)fluoranthene	320.000	J	0	ug/kg

TABLE C-2C
(Continued)

SAMPLE LOCATION	SAMPLE ID	SAMPLE INTERVALS	SAMPLE DATE	PARAMETER	RESULTS	VAL QUAL	BACKGROUND	UNITS
SEMIVOLATILE ORGANICS (Continued)								
1987	115357	5 - 7.5	13-MAY-93	Benzo(b)fluoranthene	910.000	-	0	ug/kg
1987	115357	5 - 7.5	13-MAY-93	Benzo(a)pyrene	700.000	-	0	ug/kg
1987	115357	5 - 7.5	13-MAY-93	Benzo(g,h,i)perylene	170.000	J	0	ug/kg
1987	115357	5 - 7.5	13-MAY-93	Benzo(a)anthracene	730.000	-	0	ug/kg
1987	115357	5 - 7.5	13-MAY-93	Anthracene	450.000	-	0	ug/kg
1987	115359	12.5 - 15	13-MAY-93	bis(2-Ethylhexyl) phthalate	460.000	-	0	ug/kg
1988	115350	2.5 - 5	12-MAY-93	Fluoranthene	160.000	J	0	ug/kg
1988	115350	2.5 - 5	12-MAY-93	Pyrene	100.000	J	0	ug/kg
1988	115350	2.5 - 5	12-MAY-93	Phenanthrene	82.000	J	0	ug/kg
1988	115351	17.5 - 20	12-MAY-93	bis(2-Ethylhexyl) phthalate	410.000	-	0	ug/kg
1989	115362	2.5 - 5	14-MAY-93	4-Methylphenol	140.000	J	0	ug/kg
1989	115362	2.5 - 5	14-MAY-93	Pyrene	270.000	J	0	ug/kg
1989	115362	2.5 - 5	14-MAY-93	Phenanthrene	260.000	J	0	ug/kg
1989	115362	2.5 - 5	14-MAY-93	Indeno(1,2,3-cd)pyrene	67.000	J	0	ug/kg
1989	115362	2.5 - 5	14-MAY-93	Fluoranthene	340.000	J	0	ug/kg
1989	115362	2.5 - 5	14-MAY-93	Di-n-butyl phthalate	170.000	J	0	ug/kg
1989	115362	2.5 - 5	14-MAY-93	Chrysene	140.000	J	0	ug/kg
1989	115362	2.5 - 5	14-MAY-93	Benzo(g,h,i)perylene	64.000	J	0	ug/kg
1989	115362	2.5 - 5	14-MAY-93	Benzo(b)fluoranthene	220.000	J	0	ug/kg
1989	115362	2.5 - 5	14-MAY-93	Benzo(a)pyrene	110.000	J	0	ug/kg
1989	115362	2.5 - 5	14-MAY-93	Benzo(a)anthracene	170.000	J	0	ug/kg
1989	115362	2.5 - 5	14-MAY-93	Acenaphthene	90.000	J	0	ug/kg
1989	115363	12.5 - 15	14-MAY-93	Di-n-butyl phthalate	71.000	J	0	ug/kg
1990	115329	6 - 9	10-MAY-93	Acenaphthene	260.000	J	0	ug/kg
1990	115329	6 - 9	10-MAY-93	Carbazole	180.000	J	0	ug/kg
1990	115329	6 - 9	10-MAY-93	Pyrene	900.000	-	0	ug/kg
1990	115329	6 - 9	10-MAY-93	Phenanthrene	1200.000	-	0	ug/kg
1990	115329	6 - 9	10-MAY-93	Naphthalene	46.000	J	0	ug/kg
1990	115329	6 - 9	10-MAY-93	Indeno(1,2,3-cd)pyrene	280.000	J	0	ug/kg
1990	115329	6 - 9	10-MAY-93	Fluorene	210.000	J	0	ug/kg
1990	115329	6 - 9	10-MAY-93	Fluoranthene	1200.000	-	0	ug/kg
1990	115329	6 - 9	10-MAY-93	Dibenzofuran	170.000	J	0	ug/kg
1990	115329	6 - 9	10-MAY-93	Dibenzo(a,h)anthracene	68.000	J	0	ug/kg
1990	115329	6 - 9	10-MAY-93	bis(2-Ethylhexyl) phthalate	1100.000	-	0	ug/kg
1990	115329	6 - 9	10-MAY-93	Chrysene	460.000	-	0	ug/kg
1990	115329	6 - 9	10-MAY-93	Benzo(k)fluoranthene	210.000	J	0	ug/kg
1990	115329	6 - 9	10-MAY-93	Benzo(g,h,i)perylene	170.000	J	0	ug/kg
1990	115329	6 - 9	10-MAY-93	Benzo(b)fluoranthene	530.000	-	0	ug/kg
1990	115329	6 - 9	10-MAY-93	Benzo(a)pyrene	420.000	-	0	ug/kg
1990	115329	6 - 9	10-MAY-93	Benzo(a)anthracene	460.000	-	0	ug/kg
1990	115329	6 - 9	10-MAY-93	Anthracene	260.000	J	0	ug/kg
1990	115335	17.5 - 20	10-MAY-93	bis(2-Ethylhexyl) phthalate	490.000	-	0	ug/kg

TABLE C-2C
(Continued)

SAMPLE LOCATION	SAMPLE ID	SAMPLE INTERVALS	SAMPLE DATE	PARAMETER	RESULTS	VAL QUAL	BACKGROUND	UNITS
SEMIVOLATILE ORGANICS (Continued)								
1991	115319	7.5 - 10	06-MAY-93	Acenaphthene	180.000	J	0	ug/kg
1991	115319	7.5 - 10	06-MAY-93	bis(2-Ethylhexyl) phthalate	300.000	J	0	ug/kg
1991	115319	7.5 - 10	06-MAY-93	Pyrene	1300.000	-	0	ug/kg
1991	115319	7.5 - 10	06-MAY-93	Phenanthrene	1500.000	-	0	ug/kg
1991	115319	7.5 - 10	06-MAY-93	Naphthalene	84.000	J	0	ug/kg
1991	115319	7.5 - 10	06-MAY-93	Indeno(1,2,3-cd)pyrene	320.000	J	0	ug/kg
1991	115319	7.5 - 10	06-MAY-93	Fluorene	190.000	J	0	ug/kg
1991	115319	7.5 - 10	06-MAY-93	Fluoranthene	1800.000	-	0	ug/kg
1991	115319	7.5 - 10	06-MAY-93	Dibenzofuran	130.000	J	0	ug/kg
1991	115319	7.5 - 10	06-MAY-93	Dibenzo(a,h)anthracene	140.000	J	0	ug/kg
1991	115319	7.5 - 10	06-MAY-93	Chrysene	640.000	-	0	ug/kg
1991	115319	7.5 - 10	06-MAY-93	Carbazole	98.000	J	0	ug/kg
1991	115319	7.5 - 10	06-MAY-93	Benzo(k)fluoranthene	410.000	-	0	ug/kg
1991	115319	7.5 - 10	06-MAY-93	Benzo(g,h,i)perylene	320.000	J	0	ug/kg
1991	115319	7.5 - 10	06-MAY-93	Benzo(b)fluoranthene	540.000	-	0	ug/kg
1991	115319	7.5 - 10	06-MAY-93	Benzo(a)pyrene	470.000	-	0	ug/kg
1991	115319	7.5 - 10	06-MAY-93	Benzo(a)anthracene	560.000	-	0	ug/kg
1991	115319	7.5 - 10	06-MAY-93	Anthracene	300.000	J	0	ug/kg
1991	115321	12 - 15	06-MAY-93	bis(2-Ethylhexyl) phthalate	810.000	-	0	ug/kg
1992	115343	7.5 - 10	11-MAY-93	Acenaphthene	47.000	J	0	ug/kg
1992	115343	7.5 - 10	11-MAY-93	Benzo(a)anthracene	380.000	J	0	ug/kg
1992	115343	7.5 - 10	11-MAY-93	Anthracene	70.000	J	0	ug/kg
1992	115343	7.5 - 10	11-MAY-93	Benzo(a)pyrene	510.000	-	0	ug/kg
1992	115343	7.5 - 10	11-MAY-93	bis(2-Ethylhexyl) phthalate	340.000	J	0	ug/kg
1992	115343	7.5 - 10	11-MAY-93	Pyrene	790.000	J	0	ug/kg
1992	115343	7.5 - 10	11-MAY-93	Phenanthrene	490.000	-	0	ug/kg
1992	115343	7.5 - 10	11-MAY-93	Indeno(1,2,3-cd)pyrene	260.000	J	0	ug/kg
1992	115343	7.5 - 10	11-MAY-93	Fluoranthene	870.000	-	0	ug/kg
1992	115343	7.5 - 10	11-MAY-93	Chrysene	560.000	-	0	ug/kg
1992	115343	7.5 - 10	11-MAY-93	Carbazole	62.000	J	0	ug/kg
1992	115343	7.5 - 10	11-MAY-93	Benzo(g,h,i)perylene	420.000	-	0	ug/kg
1992	115343	7.5 - 10	11-MAY-93	Benzo(b)fluoranthene	1200.000	-	0	ug/kg
1992	115346	17.5 - 20	11-MAY-93	bis(2-Ethylhexyl) phthalate	310.000	J	0	ug/kg
1993	115339	2.5 - 5	11-MAY-93	2-Methylnaphthalene	160.000	J	0	ug/kg
1993	115339	2.5 - 5	11-MAY-93	Acenaphthene	290.000	J	0	ug/kg
1993	115339	2.5 - 5	11-MAY-93	Benzo(a)anthracene	570.000	-	0	ug/kg
1993	115339	2.5 - 5	11-MAY-93	Dibenzofuran	240.000	J	0	ug/kg
1993	115339	2.5 - 5	11-MAY-93	Chrysene	530.000	-	0	ug/kg
1993	115339	2.5 - 5	11-MAY-93	bis(2-Ethylhexyl) phthalate	800.000	-	0	ug/kg
1993	115339	2.5 - 5	11-MAY-93	Pyrene	890.000	-	0	ug/kg
1993	115339	2.5 - 5	11-MAY-93	Phenanthrene	1400.000	-	0	ug/kg
1993	115339	2.5 - 5	11-MAY-93	Naphthalene	290.000	J	0	ug/kg

TABLE C-2C
(Continued)

SAMPLE LOCATION	SAMPLE ID	SAMPLE INTERVALS	SAMPLE DATE	PARAMETER	RESULTS	VAL QUAL	BACKGROUND	UNITS
SEMIVOLATILE ORGANICS (Continued)								
1993	115339	2.5 - 5	11-MAY-93	Indeno(1,2,3-cd)pyrene	320.000	J	0	ug/kg
1993	115339	2.5 - 5	11-MAY-93	Fluorene	370.000	J	0	ug/kg
1993	115339	2.5 - 5	11-MAY-93	Fluoranthene	1200.000	-	0	ug/kg
1993	115339	2.5 - 5	11-MAY-93	Carbazole	200.000	J	0	ug/kg
1993	115339	2.5 - 5	11-MAY-93	Benzo(k)fluoranthene	220.000	J	0	ug/kg
1993	115339	2.5 - 5	11-MAY-93	Benzo(g,h,i)perylene	150.000	J	0	ug/kg
1993	115339	2.5 - 5	11-MAY-93	Benzo(b)fluoranthene	630.000	-	0	ug/kg
1993	115339	2.5 - 5	11-MAY-93	Benzo(a)pyrene	510.000	-	0	ug/kg
1993	115339	2.5 - 5	11-MAY-93	Anthracene	440.000	-	0	ug/kg
1993	115340	15 - 17.5	11-MAY-93	bis(2-Ethylhexyl) phthalate	470.000	-	0	ug/kg
PESTICIDES/PCBs								
11036	115381	2.5 - 5	17-MAY-93	4,4'-DDD	4.500	J	0	ug/kg
11036	115381	2.5 - 5	17-MAY-93	Aroclor-1260	26.000	J	0	ug/kg
11038	115376	0 - 2.5	16-MAY-93	Aroclor-1260	170.000	J	0	ug/kg
11041	115389	0 - 2.5	19-MAY-93	4,4'-DDD	4.300	J	0	ug/kg
11041	115389	0 - 2.5	19-MAY-93	Endrin aldehyde	180.000	J	0	ug/kg
11041	115389	0 - 2.5	19-MAY-93	Dieldrin	13.000	J	0	ug/kg
1982	111484	0 - 2.5	06-MAY-93	Aroclor-1254	48.000	J	0	ug/kg
1985	111441	2 - 4	26-APR-93	4,4'-DDD	5.000	J	0	ug/kg
1985	111441	2 - 4	26-APR-93	Aroclor-1260	77.000	J	0	ug/kg
1985	111441	2 - 4	26-APR-93	Endosulfan sulfate	6.200	-	0	ug/kg
1986	111452	2.5 - 5	28-APR-93	Aroclor-1260	70.000	J	0	ug/kg
1987	115357	5 - 7.5	13-MAY-93	Endosulfan sulfate	10.000	J	0	ug/kg
1987	115357	5 - 7.5	13-MAY-93	Endrin ketone	7.100	J	0	ug/kg
1990	115329	6 - 9	10-MAY-93	Endosulfan sulfate	9.400	J	0	ug/kg
1990	115329	6 - 9	10-MAY-93	Endrin ketone	5.700	J	0	ug/kg
1991	115319	7.5 - 10	06-MAY-93	Endosulfan II	6.200	J	0	ug/kg

000056

6508

TABLE C-2D

SOLID WASTE LANDFILL
CONCENTRATIONS OF DETECTED ANALYTES
ABOVE BACKGROUND[a] IN SURFACE WATER
PHASE I FIELD INVESTIGATION
OPERABLE UNIT 2 REMEDIAL INVESTIGATION
FERNALD ENVIRONMENTAL MANAGEMENT PROJECT

SAMPLE LOCATION	SAMPLE ID	SAMPLE INTERVALS	SAMPLE DATE	PARAMETER	FILTER FLAG	RESULTS	VAL QUAL	BACKGROUND	UNITS
METALS									
ASIT-021	001161	-	21-FEB-89	Aluminum	UNKN	.161	-	0	mg/L
ASIT-021	001161	-	21-FEB-89	Barium	UNKN	.063	-	0	mg/L
ASIT-021	001161	-	21-FEB-89	Cadmium	UNKN	.006		0	mg/L
ASIT-021	001161	-	21-FEB-89	Beryllium	UNKN	.002	-	0	mg/L
ASIT-021	001161	-	21-FEB-89	Calcium	UNKN	47.000	-	0	mg/L
ASIT-021	001161	-	21-FEB-89	Magnesium	UNKN	10.700	-	0	mg/L
ASIT-021	001161	-	21-FEB-89	Molybdenum	UNKN	.023	-	0	mg/L
ASIT-021	001161	-	21-FEB-89	Potassium	UNKN	2.020	-	0	mg/L
ASIT-021	001161	-	21-FEB-89	Vanadium	UNKN	.019	-	0	mg/L
ASIT-021	001161	-	21-FEB-89	Sodium	UNKN	4.960	-	0	mg/L
ASIT-021	001161	-	21-FEB-89	Zinc	UNKN	.033	-	0	mg/L
ASIT-021	001161	-	21-FEB-89	Nickel	UNKN	.016	-	0	mg/L
ASIT-021	001161	-	21-FEB-89	Manganese	UNKN	.065	-	0	mg/L
ASIT-021	001161	-	21-FEB-89	Chromium	UNKN	.018		0	mg/L
ASIT-021	001161	-	21-FEB-89	Copper	UNKN	.016	-	0	mg/L
ASIT-021	001161	-	21-FEB-89	Cobalt	UNKN	.014	-	0	mg/L
ASIT-021	001161	-	21-FEB-89	Iron	UNKN	.087	-	0	mg/L
RADIONUCLIDES									
ASIT-021	001160	-	21-FEB-89	U-234	FLTR	7.300	-	0	pCi/L
ASIT-021	001160	-	21-FEB-89	U-238	FLTR	13.700	-	0	pCi/L
ASIT-021	001160	-	21-FEB-89	U-TOTAL	FLTR	42.000		0	ug/L
ASIT-021	001161	-	21-FEB-89	U-234	UNKN	6.100	J	0	pCi/L
ASIT-021	001161	-	21-FEB-89	U-TOTAL	UNKN	26.000	-	0	ug/L
ASIT-021	001161	-	21-FEB-89	U-238	UNKN	9.700	J	0	pCi/L
SEMIVOLATILE ORGANICS									
ASIT-021	001161	-	21-FEB-89	Di-n-butyl phthalate	UNFL	3.000	J	0	ug/L
ASIT-021	001161	-	21-FEB-89	Diethyl phthalate	UNFL	3.000	J	0	ug/L
GENERAL CHEMISTRY									
ASIT-021	001161	-	21-FEB-89	Chloride	UNFL	12.000		0	mg/L
ASIT-021	001161	-	21-FEB-89	Nitrate	UNFL	1.800	-	0	mg/L

See footnotes at end of table

250000

TABLE C-2D
(Continued)

SAMPLE LOCATION	SAMPLE ID	SAMPLE INTERVALS	SAMPLE DATE	PARAMETER	FILTER FLAG	RESULTS	VAL QUAL	BACKGROUND	UNITS
GENERAL CHEMISTRY (Continued)									
ASIT-021	001161	-	21-FEB-89	Sulfate	UNFL	36.800	J	0	mg/L
ASIT-021	001161	-	21-FEB-89	Total Organic Nitrogen	UNFL	1.030	-	0	mg/L
ASIT-021	001161	-	21-FEB-89	Fluoride	UNFL	.140	J	0	mg/L

[a]Zero background concentration has been used for surface water. Background data for surface water is not available at this time.

FLTR = Filtered sample; filtered status identified on Request for Analysis/Chain of Custody

UNFL = Unfiltered sample; filtered status identified on Request for Analysis/Chain of Custody

UNKN = Unknown; filtered status could not be determined.

TABLE C-2E

SOLID WASTE LANDFILL
CONCENTRATIONS OF DETECTED ANALYTES
ABOVE BACKGROUND[a] IN SURFACE WATER
PHASE II FIELD INVESTIGATION
OPERABLE UNIT 2 REMEDIAL INVESTIGATION
FERNALD ENVIRONMENTAL MANAGEMENT PROJECT

SAMPLE LOCATION	SAMPLE ID	SAMPLE INTERVALS	SAMPLE DATE	PARAMETER	FILTER FLAG	RESULTS	VAL QUAL	BACKGROUND	UNITS
METALS									
SWL-SW-01	111289	-	07-APR-93	Aluminum	UNFL	.140	-	0	mg/L
SWL-SW-01	111289	-	07-APR-93	Barium	UNFL	.039	-	0	mg/L
SWL-SW-01	111289	-	07-APR-93	Magnesium	UNFL	23.500	-	0	mg/L
SWL-SW-01	111289	-	07-APR-93	Potassium	UNFL	.865	-	0	mg/L
SWL-SW-01	111289	-	07-APR-93	Calcium	UNFL	92.500	-	0	mg/L
SWL-SW-01	111289	-	07-APR-93	Cyanide	UNFL	.002	-	0	mg/L
SWL-SW-01	111289	-	07-APR-93	Manganese	UNFL	.177	-	0	mg/L
SWL-SW-01	111289	-	07-APR-93	Silicon	UNFL	1.910	-	0	mg/L
SWL-SW-01	111289	-	07-APR-93	Sodium	UNFL	11.300	-	0	mg/L
SWL-SW-02	111291	-	06-APR-93	Barium	FLTR	.041	-	0	mg/L
SWL-SW-02	111291	-	06-APR-93	Cyanide	UNFL	.002	-	0	mg/L
SWL-SW-02	111291	-	06-APR-93	Manganese	FLTR	.185	-	0	mg/L
SWL-SW-02	111291	-	06-APR-93	Potassium	FLTR	.869	-	0	mg/L
SWL-SW-02	111291	-	06-APR-93	Silicon	FLTR	2.030	-	0	mg/L
SWL-SW-02	111291	-	06-APR-93	Sodium	FLTR	13.000	-	0	mg/L
SWL-SW-02	111291	-	06-APR-93	Magnesium	FLTR	25.700	-	0	mg/L
SWL-SW-02	111291	-	06-APR-93	Calcium	FLTR	105.000	-	0	mg/L
RADIONUCLIDES									
SWL-SW-01	111289	-	07-APR-93	PU-238	UNFL	.196	J	0	pCi/L
SWL-SW-01	111289	-	07-APR-93	U-234	UNFL	17.200	-	0	pCi/L
SWL-SW-01	111289	-	07-APR-93	U-TOTAL	UNFL	46.100	-	0	ug/L
SWL-SW-01	111289	-	07-APR-93	U-238	UNFL	18.700	-	0	pCi/L
SWL-SW-01	111289	-	07-APR-93	U-235/236	UNFL	1.300	-	0	pCi/L
SWL-SW-02	111291	-	06-APR-93	PU-238	UNFL	.035	J	0	pCi/L
SWL-SW-02	111291	-	06-APR-93	U-235/236	UNFL	.846	J	0	pCi/L
SWL-SW-02	111291	-	06-APR-93	U-TOTAL	UNFL	59.300	-	0	ug/L
SWL-SW-02	111291	-	06-APR-93	U-238	UNFL	20.200	-	0	pCi/L
SWL-SW-02	111291	-	06-APR-93	U-234	UNFL	17.100	-	0	pCi/L
SEMIVOLATILE ORGANICS									
SWL-SW-01	111289	-	07-APR-93	bis(2-Ethylhexyl) phthalate	UNFL	1.000	-	0	ug/L

See footnote at end of table

TABLE C-2E
(Continued)

SAMPLE LOCATION	SAMPLE ID	SAMPLE INTERVALS	SAMPLE DATE	PARAMETER	FILTER FLAG	RESULTS	VAL QUAL	BACKGROUND	UNITS
GENERAL CHEMISTRY									
SWL-SW-01	111289	-	07-APR-93	Chloride	UNFL	17.100	-	0	mg/L
SWL-SW-01	111289	-	07-APR-93	Total Organic Carbon	UNFL	2.800	-	0	mg/L
SWL-SW-01	111289	-	07-APR-93	Total Organic Nitrogen	UNFL	.230	-	0	mg/L
SWL-SW-01	111289	-	07-APR-93	Nitrate	UNFL	2.340	J	0	mg/L
SWL-SW-01	111289	-	07-APR-93	Fluoride	UNFL	.190	-	0	mg/L
SWL-SW-02	111291	-	06-APR-93	Chloride	UNFL	24.600	-	0	mg/L
SWL-SW-02	111291	-	06-APR-93	Sulfate	UNFL	61.010	-	0	mg/L
SWL-SW-02	111291	-	06-APR-93	Total Organic Carbon	UNFL	2.700	-	0	mg/L
SWL-SW-02	111291	-	06-APR-93	Total Organic Nitrogen	UNFL	.200	-	0	mg/L
SWL-SW-02	111291	-	06-APR-93	Fluoride	UNFL	.220	-	0	mg/L

[a]Zero background concentration has been used for surface water. Background data for surface water is not available at this time.

FLTR = Filtered sample; filtered status identified on Request for Analysis/Chain of Custody

UNFL = Unfiltered sample; filtered status identified on Request for Analysis/Chain of Custody

TABLE C-2F

SOLID WASTE LANDFILL
CONCENTRATIONS OF DETECTED ANALYTES
ABOVE BACKGROUND IN SEDIMENT
PHASE I FIELD INVESTIGATION
OPERABLE UNIT 2 REMEDIAL INVESTIGATION
FERNALD ENVIRONMENTAL MANAGEMENT PROJECT

SAMPLE LOCATION	SAMPLE ID	SAMPLE INTERVALS	SAMPLE DATE	PARAMETER	RESULTS	VAL QUAL	BACKGROUND	UNITS
RADIONUCLIDES								
ASIT-021	009100	-	11-JUL-88	U-TOTAL	24.000	J	3.24	mg/kg

TABLE C-2G

SOLID WASTE LANDFILL
CONCENTRATIONS OF DETECTED ANALYTES
ABOVE BACKGROUND IN SEDIMENT
PHASE II FIELD INVESTIGATION
OPERABLE UNIT 2 REMEDIAL INVESTIGATION
FERNALD ENVIRONMENTAL MANAGEMENT PROJECT

SAMPLE LOCATION	SAMPLE ID	SAMPLE INTERVALS	SAMPLE DATE	PARAMETER	RESULTS	VAL QUAL	BACKGROUND	UNITS
METALS								
SWL-SD-01	111328	-	08-APR-93	Calcium	161000.000	-	5296.781	mg/kg
SWL-SD-01	111328	-	08-APR-93	Magnesium	26000.000	-	1460	mg/kg
SWL-SD-01	111328	-	08-APR-93	Sodium	346.000	-	55.145	mg/kg
SWL-SD-01	111328	-	08-APR-93	Thallium	.760	J	.58	mg/kg
SWL-SD-01	111328	-	08-APR-93	Zinc	72.600	-	58.5	mg/kg
SWL-SD-02	111325	-	06-APR-93	Calcium	105000.000	-	5296.781	mg/kg
SWL-SD-02	111325	-	06-APR-93	Sodium	158.000	-	55.145	mg/kg
SWL-SD-02	111325	-	06-APR-93	Silver	4.200	-	0	mg/kg
SWL-SD-02	111325	-	06-APR-93	Magnesium	22500.000	-	1460	mg/kg
RADIONUCLIDES								
SWL-SD-01	111328	-	08-APR-93	GROSS ALPHA	27.700	-	0	pCi/g
SWL-SD-01	111328	-	08-APR-93	PU-238	.036	J	0	pCi/g
SWL-SD-01	111328	-	08-APR-93	U-234	3.660	-	1.319	pCi/g
SWL-SD-01	111328	-	08-APR-93	U-238	4.560	-	1.27	pCi/g
SWL-SD-01	111328	-	08-APR-93	U-TOTAL	14.700	-	3.24	mg/kg
SWL-SD-01	111328	-	08-APR-93	U-235/236	.250	J	.181	pCi/g
SWL-SD-01	111328	-	08-APR-93	PU-239/240	.039	J	0	pCi/g
SWL-SD-01	111328	-	08-APR-93	SR-90	.990	J	0	pCi/g
SWL-SD-01	111328	-	08-APR-93	NP-237	.620	N	0	pCi/g
SWL-SD-01	111328	-	08-APR-93	GROSS BETA	26.900	-	0	pCi/g
SWL-SD-02	111325	-	06-APR-93	GROSS ALPHA	15.300	-	0	pCi/g
SWL-SD-02	111325	-	06-APR-93	SR-90	.590	-	0	pCi/g
SWL-SD-02	111325	-	06-APR-93	U-238	6.800	-	1.27	pCi/g
SWL-SD-02	111325	-	06-APR-93	U-TOTAL	22.600	-	3.24	mg/kg
SWL-SD-02	111325	-	06-APR-93	U-234	4.180	J	1.319	pCi/g
SWL-SD-02	111325	-	06-APR-93	GROSS BETA	16.300	-	0	pCi/g
VOLATILE ORGANICS								
SWL-SD-02	111325	-	06-APR-93	Acetone	2.000	J	0	ug/kg

6508

TABLE C-2G
(Continued)

SAMPLE LOCATION	SAMPLE ID	SAMPLE INTERVALS	SAMPLE DATE	PARAMETER	RESULTS	VAL QUAL	BACKGROUND	UNITS
SEMIVOLATILE ORGANICS								
SWL-SD-01	111328	-	08-APR-93	Pyrene	58.000	J	0	ug/kg
SWL-SD-02	111325	-	06-APR-93	Acenaphthene	98.000	J	0	ug/kg
SWL-SD-02	111325	-	06-APR-93	Anthracene	240.000	J	0	ug/kg
SWL-SD-02	111325	-	06-APR-93	Benzo(a)anthracene	500.000	-	0	ug/kg
SWL-SD-02	111325	-	06-APR-93	Benzo(a)pyrene	550.000	-	0	ug/kg
SWL-SD-02	111325	-	06-APR-93	Benzo(b)fluoranthene	730.000	-	0	ug/kg
SWL-SD-02	111325	-	06-APR-93	Benzo(g,h,i)perylene	240.000	J	0	ug/kg
SWL-SD-02	111325	-	06-APR-93	Benzo(k)fluoranthene	270.000	J	0	ug/kg
SWL-SD-02	111325	-	06-APR-93	bis(2-Ethylhexyl) phthalate	53.000	J	0	ug/kg
SWL-SD-02	111325	-	06-APR-93	Pyrene	990.000	-	0	ug/kg
SWL-SD-02	111325	-	06-APR-93	Phenanthrene	1000.000	-	0	ug/kg
SWL-SD-02	111325	-	06-APR-93	Indeno(1,2,3-cd)pyrene	310.000	J	0	ug/kg
SWL-SD-02	111325	-	06-APR-93	Carbazole	120.000	J	0	ug/kg
SWL-SD-02	111325	-	06-APR-93	Chrysene	510.000	-	0	ug/kg
SWL-SD-02	111325	-	06-APR-93	Fluoranthene	1400.000	-	0	ug/kg

TABLE C-2H

SOLID WASTE LANDFILL
CONCENTRATIONS OF DETECTED ANALYTES
ABOVE BACKGROUND[a] IN GROUNDWATER - 1000 SERIES
PHASE I FIELD INVESTIGATION
OPERABLE UNIT 2 REMEDIAL INVESTIGATION
FERNALD ENVIRONMENTAL MANAGEMENT PROJECT

SAMPLE LOCATION	SAMPLE ID	SAMPLE INTERVALS	SAMPLE DATE	PARAMETER	FILTER FLAG	RESULTS	VAL QUAL	BACKGROUND	UNITS
METALS									
1035	003245	-	25-MAY-88	Manganese	FLTR	.379	-	.165	mg/L
1035	003245	-	25-MAY-88	Molybdenum	FLTR	.029	-	.028	mg/L
1035	003560	-	11-AUG-88	Arsenic	*F	.350	-	.122	mg/L
1038	003183	-	11-MAY-88	Cadmium	FLTR	.013	-	.007	mg/L
1038	003183	-	11-MAY-88	Calcium	FLTR	135.000	-	125.574	mg/L
1038	003183	-	11-MAY-88	Magnesium	FLTR	60.900	-	49.627	mg/L
1038	003183	-	11-MAY-88	Manganese	FLTR	.286	-	.165	mg/L
1038	003518	-	22-AUG-88	Calcium	*F	133.000	-	125.574	mg/L
1038	003518	-	22-AUG-88	Manganese	*F	.204	-	.165	mg/L
1038	003518	-	22-AUG-88	Magnesium	*F	60.600	-	49.627	mg/L
1038	003762	-	20-NOV-88	Calcium	FLTR	126.000	-	125.574	mg/L
1038	003762	-	20-NOV-88	Molybdenum	FLTR	.036	-	.028	mg/L
1038	003762	-	20-NOV-88	Manganese	FLTR	.210	-	.165	mg/L
1038	003762	-	20-NOV-88	Magnesium	FLTR	56.000	-	49.627	mg/L
1038	003947	-	05-FEB-89	Cadmium	FLTR	.010	-	.007	mg/L
1038	003947	-	05-FEB-89	Nickel	FLTR	.029	-	.026	mg/L
1038	003947	-	05-FEB-89	Chromium	FLTR	.036	-	.0345	mg/L
1038	003947	-	05-FEB-89	Manganese	FLTR	.217	-	.165	mg/L
1038	003947	-	05-FEB-89	Magnesium	FLTR	66.300	-	49.627	mg/L
1038	003947	-	05-FEB-89	Calcium	FLTR	147.000	-	125.574	mg/L
1038	066431	-	18-JUN-89	Aluminum	UNKN	.168	-	.123	mg/L
1038	066431	-	18-JUN-89	Vanadium	UNKN	.028	-	.0195	mg/L
1038	066431	-	18-JUN-89	Calcium	UNKN	145.000	-	125.574	mg/L
1038	066431	-	18-JUN-89	Magnesium	UNKN	65.400	-	49.627	mg/L
1038	066431	-	18-JUN-89	Chromium	UNKN	.039	-	.0345	mg/L
1038	066495	-	13-AUG-89	Aluminum	UNKN	.149	-	.123	mg/L
1038	066495	-	13-AUG-89	Magnesium	UNKN	66.200	-	49.627	mg/L
1038	066495	-	13-AUG-89	Calcium	UNKN	156.000	-	125.574	mg/L
1038	066495	-	13-AUG-89	Vanadium	UNKN	.026	-	.0195	mg/L
1719	047006	-	09-JUN-92	Magnesium	UNKN	82.400	-	49.627	mg/L
1719	047006	-	09-JUN-92	Molybdenum	UNKN	.038	-	.028	mg/L
1719	047006	-	09-JUN-92	Thallium	UNKN	.337	J	0	mg/L

See footnotes at end of table

TABLE C-2H
(Continued)

SAMPLE LOCATION	SAMPLE ID	SAMPLE INTERVALS	SAMPLE DATE	PARAMETER	FILTER FLAG	RESULTS	VAL QUAL	BACKGROUND	UNITS
METALS (Continued)									
1719	047006	-	09-JUN-92	Silicon	UNKN	7.550	-	0	mg/L
1719	047006	-	09-JUN-92	Nickel	UNKN	.133	-	.026	mg/L
1719	047006	-	09-JUN-92	Manganese	UNKN	.238	-	.165	mg/L
RADIONUCLIDES									
1035	003245	-	25-MAY-88	NP-237	*U	1.000	-	0	pCi/L
1035	003245	-	25-MAY-88	TH-228	*U	4.000	-	1.04	pCi/L
1035	003245	-	25-MAY-88	TH-230	*U	4.600	-	2	pCi/L
1035	003245	-	25-MAY-88	TH-232	*U	2.600	-	0	pCi/L
1035	003245	-	25-MAY-88	U-TOTAL	*U	17.000	-	4	ug/L
1035	003245	-	25-MAY-88	U-238	*U	3.900	-	1.07	pCi/L
1035	003245	-	25-MAY-88	U-234	*U	4.600	-	1.9	pCi/L
1035	003245	-	25-MAY-88	RA-226	*U	2.000	-	1	pCi/L
1035	003736	-	15-NOV-88	U-238	*U	1.200	J	1.07	pCi/L
1035	066826	-	06-JAN-90	TH-228	UNKN	1.940	-	1.04	pCi/L
1035	066826	-	06-JAN-90	TH-230	UNKN	2.030	J	2	pCi/L
1035	066826	-	06-JAN-90	U-238	UNKN	2.880	-	1.07	pCi/L
1035	066826	-	06-JAN-90	U-TOTAL	UNKN	8.190	J	4	ug/L
1038	003183	-	11-MAY-88	U-238	*U	1.400	-	1.07	pCi/L
1038	003183	-	11-MAY-88	U-TOTAL	*U	5.000	J	4	ug/L
1038	003518	-	22-AUG-88	U-238	*U	1.400	J	1.07	pCi/L
1038	003762	-	20-NOV-88	U-234	*U	2.300	J	1.9	pCi/L
1038	003762	-	20-NOV-88	U-TOTAL	*U	4.500	J	4	ug/L
1038	003762	-	20-NOV-88	U-238	*U	1.200	J	1.07	pCi/L
1038	003947	-	05-FEB-89	U-238	*U	1.500	-	1.07	pCi/L
1038	066431	-	18-JUN-89	U-234	UNKN	3.100	-	1.9	pCi/L
1038	066431	-	18-JUN-89	U-TOTAL	UNKN	5.000	-	4	ug/L
1038	066431	-	18-JUN-89	U-238	UNKN	2.000	-	1.07	pCi/L
1038	066495	-	13-AUG-89	U-238	N/A	1.300	J	1.07	pCi/L
GENERAL CHEMISTRY									
1035	003245	-	25-MAY-88	Phosphorus	UNFL	4.900	-	.223	mg/L
1035	003245	-	25-MAY-88	Total Organic Nitrogen	UNFL	4.600	-	0	mg/L
1035	003560	-	11-AUG-88	Phosphorus	UNFL	3.550	J	.223	mg/L
1035	003560	-	11-AUG-88	Total Organic Nitrogen	UNFL	.100	J	0	mg/L
1035	003736	-	15-NOV-88	Total Kjeldahl Nitrogen	UNFL	.420	J	0	mg/L
1035	003736	-	15-NOV-88	Total Organic Nitrogen	UNFL	.420	J	0	mg/L
1035	003931	-	05-FEB-89	Nitrate	UNFL	.580	J	.522	mg/L
1035	003931	-	05-FEB-89	Total Organic Nitrogen	N/A	.160	J	0	mg/L

See footnotes at end of table

TABLE C-2H
(Continued)

SAMPLE LOCATION	SAMPLE ID	SAMPLE INTERVALS	SAMPLE DATE	PARAMETER	FILTER FLAG	RESULTS	VAL QUAL	BACKGROUND	UNITS
GENERAL CHEMISTRY (Continued)									
1035	003931	-	05-FEB-89	Total Kjeldahl Nitrogen	UNFL	.160	J	0	mg/L
1038	003183	-	11-MAY-88	Sulfate	UNFL	200.000	J	141.894	mg/L
1038	003518	-	22-AUG-88	Phosphorus	UNFL	.625	J	.223	mg/L
1038	003518	-	22-AUG-88	Total Organic Nitrogen	UNFL	.100	J	0	mg/L
1038	003762	-	20-NOV-88	Phosphorus	UNFL	2.760	-	.223	mg/L
1038	003947	-	05-FEB-89	Phosphorus	UNFL	.270	J	.223	mg/L
1038	003947	-	05-FEB-89	Total Kjeldahl Nitrogen	UNFL	.223	J	0	mg/L
1038	003947	-	05-FEB-89	Sulfate	UNFL	183.000	-	141.894	mg/L
1038	003947	-	05-FEB-89	Total Organic Nitrogen	UNFL	.223	J	0	mg/L
1038	066431	-	18-JUN-89	Sulfate	UNFL	158.000	-	141.894	mg/L
1038	066431	-	18-JUN-89	Total Organic Halides	UNFL	.011	J	0	mg/L
1038	066495	-	13-AUG-89	Sulfate	UNFL	155.000	J	141.894	mg/L
1038	066495	-	13-AUG-89	Total Organic Halides	UNFL	.011	-	0	mg/L
1719	047006	-	09-JUN-92	Sulfate	UNFL	296.200	J	141.894	mg/L
1719	047006	-	09-JUN-92	Total Organic Carbon	UNFL	7.340	-	0	mg/L
1719	047006	-	09-JUN-92	Total Organic Halides	UNFL	.061	-	0	mg/L

[a]Zero background concentration has been used for surface water. Background data for surface water is not available at this time.

FLTR = Filtered sample; filtered status identified on Request for Analysis/Chain of Custody

UNFL = Unfiltered sample; filtered status identified on Request for Analysis/Chain of Custody

UNKN = Unknown; filtered status could not be determined.

*F = Filtered sample; filtered status not identified on Request for Analysis/Chain of Custody; determination based upon other field investigation documentation.

*U = Unfiltered sample; filtered status not identified on Request for Analysis/Chain of Custody; determination based upon other field investigation documentation.

N/A = Not applicable

TABLE C-2I

SOLID WASTE LANDFILL
CONCENTRATIONS OF DETECTED ANALYTES
ABOVE BACKGROUND[a] IN GROUNDWATER - 2000 SERIES
PHASE I FIELD INVESTIGATION
OPERABLE UNIT 2 REMEDIAL INVESTIGATION
FERNALD ENVIRONMENTAL MANAGEMENT PROJECT

SAMPLE LOCATION	SAMPLE ID	SAMPLE INTERVALS	SAMPLE DATE	PARAMETER	FILTER FLAG	DUPS	RESULTS	VAL QUAL	BACKGROUND	UNITS
METALS										
2027	003168	-	09-MAY-88	Calcium	*F		274.000	-	135.163	mg/L
2027	003168	-	09-MAY-88	Iron	*F		8.060	-	4	mg/L
2027	003168	-	09-MAY-88	Potassium	*F		3.690	-	3.087	mg/L
2027	003168	-	09-MAY-88	Zinc	*F		.228	-	.105	mg/L
2027	003168	-	09-MAY-88	Magnesium	*F		49.800	-	38.07	mg/L
2027	003453	-	10-AUG-88	Calcium	*F		210.000	-	135.163	mg/L
2027	003453	-	10-AUG-88	Magnesium	*F		44.000	-	38.07	mg/L
2027	003453	-	10-AUG-88	Iron	*F		6.100	-	4	mg/L
2027	003454	-	10-AUG-88	Calcium	*F	DUP	210.000	-	135.163	mg/L
2027	003454	-	10-AUG-88	Magnesium	*F	DUP	43.000	-	38.07	mg/L
2027	003454	-	10-AUG-88	Iron	*F	DUP	6.000	-	4	mg/L
2027	003941	-	08-MAR-89	Calcium	FLTR		210.000	J	135.163	mg/L
2027	003941	-	08-MAR-89	Iron	FLTR		4.700	J	4	mg/L
2027	003941	-	08-MAR-89	Potassium	FLTR		6.400	J	3.087	mg/L
2027	003941	-	08-MAR-89	Magnesium	FLTR		44.000	J	38.07	mg/L
2027	066447	-	27-JUN-89	Aluminum	UNKN		.207	J	.184	mg/L
2027	066447	-	27-JUN-89	Calcium	UNKN		333.000	J	135.163	mg/L
2027	066447	-	27-JUN-89	Chromium	UNKN		.053	J	.042	mg/L
2027	066447	-	27-JUN-89	Vanadium	UNKN		.044	J	.027	mg/L
2027	066447	-	27-JUN-89	Magnesium	UNKN		68.200	J	38.07	mg/L
2027	066447	-	27-JUN-89	Iron	UNKN		5.804	J	4	mg/L
2027	066599	-	10-SEP-89	Aluminum	UNKN		.275	-	.184	mg/L
2027	066599	-	10-SEP-89	Calcium	UNKN		449.000	-	135.163	mg/L
2027	066599	-	10-SEP-89	Magnesium	UNKN		72.200	-	38.07	mg/L
2027	066599	-	10-SEP-89	Nickel	UNKN		.037	J	.026	mg/L
2027	066599	-	10-SEP-89	Vanadium	UNKN		.044	J	.027	mg/L
2027	066599	-	10-SEP-89	Potassium	UNKN		4.200	J	3.087	mg/L
2027	066599	-	10-SEP-89	Manganese	UNKN		1.940	-	.8	mg/L
2027	066599	-	10-SEP-89	Cadmium	UNKN		.010	-	.006	mg/L
2027	066599	-	10-SEP-89	Cobalt	UNKN		.013	J	0	mg/L
2027	066599	-	10-SEP-89	Aluminum	UNKN		.275	-	.184	mg/L

See footnotes at end of table

TABLE C-2I
(Continued)

SAMPLE LOCATION	SAMPLE ID	SAMPLE INTERVALS	SAMPLE DATE	PARAMETER	FILTER FLAG	DUPS	RESULTS	VAL QUAL	BACKGROUND	UNITS
METALS (Continued)										
2027	066600	-	10-SEP-89	Aluminum	UNKN	DUP	.287	-	.184	mg/L
2027	066600	-	10-SEP-89	Cadmium	UNKN	DUP	.019	-	.006	mg/L
2027	066600	-	10-SEP-89	Zinc	UNKN	DUP	.108	J	.105	mg/L
2027	066600	-	10-SEP-89	Vanadium	UNKN	DUP	.048	-	.027	mg/L
2027	066600	-	10-SEP-89	Potassium	UNKN	DUP	5.530	-	3.087	mg/L
2027	066600	-	10-SEP-89	Nickel	UNKN	DUP	.037	-	.026	mg/L
2027	066600	-	10-SEP-89	Manganese	UNKN	DUP	1.580	-	.8	mg/L
2027	066600	-	10-SEP-89	Magnesium	UNKN	DUP	81.900	-	38.07	mg/L
2027	066600	-	10-SEP-89	Iron	UNKN	DUP	9.610	J	4	mg/L
2027	066600	-	10-SEP-89	Cobalt	UNKN	DUP	.014	-	0	mg/L
2027	066600	-	10-SEP-89	Calcium	UNKN	DUP	519.000	-	135.163	mg/L
2037	003917	-	22-FEB-89	Calcium	FLTR		140.000	J	135.163	mg/L
2037	066461	-	28-JUN-89	Aluminum	UNKN		.187	-	.184	mg/L
2037	066461	-	28-JUN-89	Calcium	UNKN		145.000	-	135.163	mg/L
2037	066461	-	28-JUN-89	Zinc	UNKN		.185	-	.105	mg/L
2037	066570	-	25-AUG-89	Calcium	UNKN		228.000	-	135.163	mg/L
2037	066570	-	25-AUG-89	Iron	UNKN		5.540	-	4	mg/L
2037	066570	-	25-AUG-89	Magnesium	UNKN		42.200	-	38.07	mg/L
2052	003476	-	16-DEC-88	Calcium	FLTR	DUP	147.000	-	135.163	mg/L
2052	003476	-	16-DEC-88	Iron	FLTR	DUP	4.190	J	4	mg/L
2052	003791	-	16-DEC-88	Calcium	FLTR		146.000	-	135.163	mg/L
2052	003791	-	16-DEC-88	Iron	FLTR		4.210	J	4	mg/L
2052	003892	-	08-FEB-89	Cadmium	FLTR		.007	J	.006	mg/L
2052	003892	-	08-FEB-89	Calcium	FLTR		142.000	J	135.163	mg/L
RADIONUCLIDES										
2027	003168	-	09-MAY-88	RA-226	*U		1.600	-	1.2	pCi/L
2027	003168	-	09-MAY-88	U-238	*U		2.000	-	.9	pCi/L
2027	003168	-	09-MAY-88	U-TOTAL	*U		6.000	-	2.92	ug/L
2027	003453	-	10-AUG-88	U-234	*U		2.500	J	1.9	pCi/L
2027	003453	-	10-AUG-88	U-TOTAL	*U		6.000	-	2.92	ug/L
2027	003453	-	10-AUG-88	U-238	*U		2.300	J	.9	pCi/L
2027	003454	-	10-AUG-88	U-234	*U	DUP	2.200	J	1.9	pCi/L
2027	003454	-	10-AUG-88	U-TOTAL	*U	DUP	6.000	-	2.92	ug/L
2027	003454	-	10-AUG-88	U-238	*U	DUP	3.100	J	.9	pCi/L
2027	003941	-	08-MAR-89	U-234	*U		3.300	J	1.9	pCi/L
2027	003941	-	08-MAR-89	U-238	*U		2.400	J	.9	pCi/L
2027	003941	-	08-MAR-89	U-TOTAL	*U		7.000	-	2.92	ug/L
2027	066447	-	27-JUN-89	U-234	UNKN		18.700	-	1.9	pCi/L
2027	066447	-	27-JUN-89	U-238	UNKN		15.400	-	.9	pCi/L

See footnotes at end of table

TABLE C-2I
(Continued)

SAMPLE LOCATION	SAMPLE ID	SAMPLE INTERVALS	SAMPLE DATE	PARAMETER	FILTER FLAG	DUPS	RESULTS	VAL QUAL	BACKGROUND	UNITS
RADIONUCLIDES (Continued)										
2027	066447	-	27-JUN-89	U-TOTAL	UNKN		46.000	-	2.92	ug/L
2027	066580	-	10-SEP-89	U-234	UNKN		2.400	-	1.9	pCi/L
2027	066580	-	10-SEP-89	U-238	UNKN		4.700	-	.9	pCi/L
2027	066580	-	10-SEP-89	U-TOTAL	UNKN		20.000	-	2.92	ug/L
2027	066581	-	10-SEP-89	U-234	UNKN	DUP	7.900	-	1.9	pCi/L
2027	066581	-	10-SEP-89	U-TOTAL	UNKN	DUP	20.000	-	2.92	ug/L
2027	066581	-	10-SEP-89	U-238	UNKN	DUP	6.300	-	.9	pCi/L
2027	066708	-	16-NOV-89	U-234	UNKN		6.260	J	1.9	pCi/L
2027	066708	-	16-NOV-89	U-TOTAL	UNKN		13.000	-	2.92	ug/L
2027	066708	-	16-NOV-89	U-238	UNKN		5.220	-	.9	pCi/L
2027	066742	-	16-NOV-89	U-234	UNKN	DUP	5.960	J	1.9	pCi/L
2027	066742	-	16-NOV-89	U-TOTAL	UNKN	DUP	12.000	-	2.92	ug/L
2027	066742	-	16-NOV-89	U-238	N/A	DUP	5.160	-	.9	pCi/L
2037	003248	-	01-JUN-88	U-238	*U		2.000	-	.9	pCi/L
2037	003248	-	01-JUN-88	U-TOTAL	*U		4.000	J	2.92	ug/L
2037	003249	-	01-JUN-88	TH-230	*U	DUP	2.800	-	1.79	pCi/L
2037	003249	-	01-JUN-88	U-238	*U	DUP	2.200	-	.9	pCi/L
2037	003249	-	01-JUN-88	U-TOTAL	*U	DUP	4.000	J	2.92	ug/L
2037	003917	-	22-FEB-89	U-TOTAL	*U		3.000	J	2.92	ug/L
2037	066710	-	19-NOV-89	U-234	UNKN		2.000	-	1.9	pCi/L
2037	066710	-	19-NOV-89	U-TOTAL	UNKN		5.000	J	2.92	ug/L
2037	066710	-	19-NOV-89	U-238	UNKN		1.520	-	.9	pCi/L
2052	066847	-	04-JAN-90	U-238	UNKN		3.110	-	.9	pCi/L
2052	066847	-	04-JAN-90	U-TOTAL	UNKN		10.100	J	2.92	ug/L
VOLATILE ORGANICS										
2027	066599	-	10-SEP-89	Carbon disulfide	UNFL		10.000	-	0	ug/L
2027	066600	-	10-SEP-89	Carbon disulfide	UNFL	DUP	1.000	J	0	ug/L
2037	066570	-	25-AUG-89	Carbon disulfide	UNFL		11.000	-	0	ug/L
2052	003587	-	13-SEP-88	Acetone	UNFL		4.000	J	0	ug/L
SEMIVOLATILE ORGANICS										
2027	066599	-	10-SEP-89	N-Nitrosodiphenylamine	UNFL		3.000	J	0	ug/L
2027	066599	-	10-SEP-89	bis(2-Ethylhexyl) phthalate	UNFL		3.000	J	0	ug/L
2037	003248	-	01-JUN-88	bis(2-Ethylhexyl) phthalate	UNFL		7.000	J	0	ug/L
2037	066570	-	25-AUG-89	bis(2-Chloroisopropyl) ether	UNFL		10.000	L	0	ug/L

See footnotes at end of table

TABLE C-2I
(Continued)

SAMPLE LOCATION	SAMPLE ID	SAMPLE INTERVALS	SAMPLE DATE	PARAMETER	FILTER FLAG	DUPS	RESULTS	VAL QUAL	BACKGROUND	UNITS
DIOXIN/FURAN										
2037	066570	-	25-AUG-89	Hexachlorodibenzofuran	UNFL		.00038	-	0	ug/L
2037	066570	-	25-AUG-89	Tetrachlorodibenzofuran	UNFL		.00022	-	0	ug/L
2037	066570	-	25-AUG-89	Pentachlorodibenzofuran	UNFL		.00031	-	0	ug/L
GENERAL CHEMISTRY										
2027	003168	-	09-MAY-88	Sulfate	UNFL		645.000	-	359.847	mg/L
2027	003453	-	10-AUG-88	Fluoride	UNFL		1.800	-	.938	mg/L
2027	003454	-	10-AUG-88	Fluoride	UNFL	DUP	1.800	-	.938	mg/L
2027	003731	-	01-DEC-88	Phosphorus	UNFL		26.400	-	.693	mg/L
2027	003731	-	01-DEC-88	Total Kjeldahl Nitrogen	UNFL		5.000	-	0	mg/L
2027	003731	-	01-DEC-88	Total Organic Nitrogen	UNFL		4.360	-	.652	mg/L
2027	003941	-	08-MAR-89	Total Kjeldahl Nitrogen	UNFL		1.600	J	0	mg/L
2027	003941	-	08-MAR-89	Total Organic Nitrogen	UNFL		1.000	J	.652	mg/L
2027	066447	-	27-JUN-89	Sulfate	UNFL		569.000	J	359.847	mg/L
2027	066580	-	10-SEP-89	Sulfate	UNFL		726.000	J	359.847	mg/L
2027	066580	-	10-SEP-89	Total Organic Halides	UNFL		.028	-	.021	mg/L
2027	066581	-	10-SEP-89	Sulfate	UNFL	DUP	1320.000	J	359.847	mg/L
2037	003249	-	01-JUN-88	Total Kjeldahl Nitrogen	UNFL	DUP	1.000	J	0	mg/L
2037	003249	-	01-JUN-88	Total Organic Nitrogen	UNFL	DUP	1.000	J	.652	mg/L
2037	003718	-	18-NOV-88	Total Kjeldahl Nitrogen	UNFL		.390	-	0	mg/L
2037	003917	-	22-FEB-89	Total Kjeldahl Nitrogen	UNFL		.700	J	0	mg/L
2052	003476	-	16-DEC-88	Phosphorus	UNFL	DUP	1.890	-	.693	mg/L
2052	003476	-	16-DEC-88	Total Organic Nitrogen	UNFL	DUP	1.410	-	.652	mg/L
2052	003476	-	16-DEC-88	Total Kjeldahl Nitrogen	UNFL	DUP	1.940	J	0	mg/L
2052	003791	-	16-DEC-88	Phosphorus	UNFL		6.990	-	.693	mg/L
2052	003791	-	16-DEC-88	Total Organic Nitrogen	UNFL		2.950	-	.652	mg/L
2052	003791	-	16-DEC-88	Total Kjeldahl Nitrogen	UNFL		3.630	J	0	mg/L
2052	003892	-	08-FEB-89	Total Kjeldahl Nitrogen	UNFL		.651	J	0	mg/L

[a]Zero background concentration has been used for surface water. Background data for surface water is not available at this time.
FLTR = Filtered sample; filtered status identified on Request for Analysis/Chain of Custody
UNFL = Unfiltered sample; filtered status identified on Request for Analysis/Chain of Custody
UNKN = Unknown; filtered status could not be determined.
DUP = Duplicate Sample
*F = Filtered sample; filtered status not identified on Request for Analysis/Chain of Custody; determination based upon other field investigation documentation.
*U = Unfiltered sample; filtered status not identified on Request for Analysis/Chain of Custody; determination based upon other field investigation documentation.
N/A = Not applicable

TABLE C-2J

SOLID WASTE LANDFILL
CONCENTRATIONS OF DETECTED ANALYTES
ABOVE BACKGROUND[a] IN GROUNDWATER - 3000 SERIES
PHASE I FIELD INVESTIGATION
OPERABLE UNIT 2 REMEDIAL INVESTIGATION
FERNALD ENVIRONMENTAL MANAGEMENT PROJECT

SAMPLE LOCATION	SAMPLE ID	SAMPLE INTERVALS	SAMPLE DATE	PARAMETER	FILTER FLAG	RESULTS	VAL QUAL	BACKGROUND	UNITS
METALS									
3037	003152	-	05-MAY-88	Calcium	FLTR	254.000	-	135.163	mg/L
3037	003152	-	05-MAY-88	Magnesium	FLTR	61.300	-	38.07	mg/L
3037	003152	-	05-MAY-88	Nickel	FLTR	.040	-	.026	mg/L
3037	003152	-	05-MAY-88	Potassium	FLTR	15.900	-	3.087	mg/L
3037	003152	-	05-MAY-88	Sodium	FLTR	62.700	-	51.918	mg/L
3037	003717	-	18-NOV-88	Calcium	FLTR	291.000	-	135.163	mg/L
3037	003717	-	18-NOV-88	Potassium	FLTR	14.500	-	3.087	mg/L
3037	003717	-	18-NOV-88	Iron	FLTR	16.900	-	4	mg/L
3037	003717	-	18-NOV-88	Magnesium	FLTR	67.200	-	38.07	mg/L
3037	003916	-	22-FEB-89	Cadmium	FLTR	.007	J	.006	mg/L
3037	003916	-	22-FEB-89	Calcium	FLTR	280.000	J	135.163	mg/L
3037	003916	-	22-FEB-89	Chromium	FLTR	.050	J	.042	mg/L
3037	003916	-	22-FEB-89	Magnesium	FLTR	61.000	J	38.07	mg/L
3037	003916	-	22-FEB-89	Sodium	FLTR	55.000	J	51.918	mg/L
3037	003916	-	22-FEB-89	Potassium	FLTR	13.000	J	3.087	mg/L
3037	003916	-	22-FEB-89	Iron	FLTR	14.000	J	4	mg/L
3037	066462	-	28-JUN-89	Aluminum	UNKN	.201	-	.184	mg/L
3037	066462	-	28-JUN-89	Zinc	UNKN	.267	-	.105	mg/L
3037	066462	-	28-JUN-89	Vanadium	UNKN	.038	-	.027	mg/L
3037	066462	-	28-JUN-89	Calcium	UNKN	277.000	-	135.163	mg/L
3037	066462	-	28-JUN-89	Chromium	UNKN	.057	-	.042	mg/L
3037	066462	-	28-JUN-89	Iron	UNKN	13.090	-	4	mg/L
3037	066462	-	28-JUN-89	Nickel	UNKN	.028	-	.026	mg/L
3037	066462	-	28-JUN-89	Magnesium	UNKN	62.900	-	38.07	mg/L
3037	066571	-	25-AUG-89	Aluminum	UNKN	.224	-	.184	mg/L
3037	066571	-	25-AUG-89	Calcium	UNKN	305.000	-	135.163	mg/L
3037	066571	-	25-AUG-89	Iron	UNKN	14.600	-	4	mg/L
3037	066571	-	25-AUG-89	Magnesium	UNKN	65.700	-	38.07	mg/L
3037	066571	-	25-AUG-89	Sodium	UNKN	57.100	-	51.918	mg/L
3037	066571	-	25-AUG-89	Potassium	UNKN	13.000	-	3.087	mg/L

See footnotes at end of table

TABLE C-2J
(Continued)

SAMPLE LOCATION	SAMPLE ID	SAMPLE INTERVALS	SAMPLE DATE	PARAMETER	FILTER FLAG	RESULTS	VAL QUAL	BACKGROUND	UNITS
RADIONUCLIDES									
3037	003152	-	05-MAY-88	U-234	*U	3.700	-	1.9	pCi/L
3037	003152	-	05-MAY-88	U-238	*U	13.000	-	.9	pCi/L
3037	003447	-	08-AUG-88	U-234	*F	2.100	-	1.9	pCi/L
3037	003447	-	08-AUG-88	U-238	*F	5.700	-	.9	pCi/L
3037	003447	-	08-AUG-88	U-TOTAL	*F	15.000	-	2.92	ug/L
3037	003916	-	22-FEB-89	U-238	*U	1.800	-	.9	pCi/L
3037	003916	-	22-FEB-89	U-TOTAL	*U	6.000	-	2.92	ug/L
VOLATILE ORGANICS									
3037	066928	- 77	27-AUG-90	2-Hexanone	UNFL	2.000	J	0	ug/L
3037	066928	- 77	27-AUG-90	Acetone	UNFL	29.000	-	0	ug/L
SEMIVOLATILE ORGANICS									
3037	066571	-	25-AUG-89	Butyl benzyl phthalate	UNFL	3.000	J	0	ug/L
3037	066571	-	25-AUG-89	Diethyl phthalate	UNFL	2.000	J	0	ug/L
3037	066571	-	25-AUG-89	Phenol	UNFL	17.000	-	0	ug/L
3037	066571	-	25-AUG-89	bis(2-Chloroisopropyl) ether	UNFL	10.000	L	0	ug/L
3037	066928	- 77	27-AUG-90	bis(2-Ethylhexyl) phthalate	UNFL	4.000	J	0	ug/L
3037	066571	-	25-AUG-89	Pentachlorodibenzofuran	UNFL	.000	-	0	ug/L
3037	066571	-	25-AUG-89	Tetrachlorodibenzo-p-dioxin	UNFL	.004	-	0	ug/L
3037	066571	-	25-AUG-89	Tetrachlorodibenzofuran	UNFL	.001	-	0	ug/L
GENERAL CHEMISTRY									
3037	003152	-	05-MAY-88	Sulfate	UNFL	475.000	-	359.847	mg/L
3037	003152	-	05-MAY-88	Total Kjeldahl Nitrogen	UNFL	3.390	J	0	mg/L
3037	003152	-	05-MAY-88	Total Organic Nitrogen	UNFL	1.570	J	.652	mg/L
3037	003447	-	08-AUG-88	Ammonia	UNFL	13.000	-	3.24	mg/L
3037	003717	-	18-NOV-88	Ammonia	UNFL	18.800	-	3.24	mg/L
3037	003717	-	18-NOV-88	Sulfate	UNFL	394.000	J	359.847	mg/L
3037	003717	-	18-NOV-88	Total Organic Nitrogen	UNFL	4.000	-	.652	mg/L
3037	003717	-	18-NOV-88	Total Kjeldahl Nitrogen	UNFL	22.800	-	0	mg/L
3037	003717	-	18-NOV-88	Chloride	UNFL	212.000	-	145.065	mg/L
3037	003916	-	22-FEB-89	Ammonia	UNFL	16.000	J	3.24	mg/L
3037	003916	-	22-FEB-89	Chloride	UNFL	200.000	J	145.065	mg/L
3037	003916	-	22-FEB-89	Sulfate	UNFL	390.000	J	359.847	mg/L
3037	003916	-	22-FEB-89	Total Kjeldahl Nitrogen	UNFL	27.000	J	0	mg/L
3037	003916	-	22-FEB-89	Total Organic Halides	UNFL	.027	-	.021	mg/L

See footnotes at end of table

TABLE C-2J
(Continued)

SAMPLE LOCATION	SAMPLE ID	SAMPLE INTERVALS	SAMPLE DATE	PARAMETER	FILTER FLAG	RESULTS	VAL QUAL	BACKGROUND	UNITS
GENERAL CHEMISTRY (Continued)									
3037	003916	-	22-FEB-89	Total Organic Nitrogen	UNFL	12.000	J	.652	mg/L
3037	066462	-	28-JUN-89	Chloride	UNFL	206.000	-	145.065	mg/L
3037	066462	-	28-JUN-89	Sulfate	UNFL	467.000	-	359.847	mg/L
3037	066541	-	25-AUG-89	Chloride	UNFL	250.000	J	145.065	mg/L

[a]Background concentrations established for metals are filtered while all other background parameters are unfiltered

FLTR = Filtered sample; filtered status identified on Request for Analysis/Chain of Custody

UNFL = Unfiltered sample; filtered status identified on Request for Analysis/Chain of Custody

UNKN = Unknown; filtered status could not be determined.

*F = Filtered sample; filtered status not identified on Request for Analysis/Chain of Custody; determination based upon other field investigation documentation.

*U = Unfiltered sample; filtered status not identified on Request for Analysis/Chain of Custody; determination based upon other field investigation documentation.

TABLE C-2K

SOLID WASTE LANDFILL
CONCENTRATIONS OF DETECTED ANALYTES
ABOVE BACKGROUND[a] IN GROUNDWATER - 1000 SERIES
PHASE II FIELD INVESTIGATION
OPERABLE UNIT 2 REMEDIAL INVESTIGATION
FERNALD ENVIRONMENTAL MANAGEMENT PROJECT

SAMPLE LOCATION	SAMPLE ID	SAMPLE INTERVALS	SAMPLE DATE	PARAMETER	FILTER FLAG	RESULTS	VAL QUAL	BACKGROUND	UNITS
METALS									
1035	111552	-	05-MAY-93	Aluminum	UNFL	.224	-	.123	mg/L
1035	111552	-	05-MAY-93	Silicon	UNFL	6.360	-	0	mg/L
1035	111553	-	05-MAY-93	Cobalt	FLTR	.004	-	0	mg/L
1035	111553	-	05-MAY-93	Silicon	FLTR	6.600	-	0	mg/L
1038	111548	-	05-MAY-93	Aluminum	UNFL	.267	-	.123	mg/L
1038	111548	-	05-MAY-93	Magnesium	UNFL	62.800	-	49.627	mg/L
1038	111548	-	05-MAY-93	Silicon	UNFL	9.200	-	0	mg/L
1038	111548	-	05-MAY-93	Calcium	UNFL	145.000	-	125.574	mg/L
1038	111549	-	05-MAY-93	Calcium	FLTR	141.000	-	125.574	mg/L
1038	111549	-	05-MAY-93	Silicon	FLTR	9.400	-	0	mg/L
1038	111549	-	05-MAY-93	Magnesium	FLTR	61.400	-	49.627	mg/L
1950	115480	-	08-JUN-93	Magnesium	UNFL	80.700	-	49.627	mg/L
1950	115480	-	08-JUN-93	Silicon	UNFL	7.670	-	0	mg/L
1950	115480	-	08-JUN-93	Manganese	UNFL	.203	-	.165	mg/L
1950	115481	-	08-JUN-93	Aluminum	UNFL	4.320	-	.123	mg/L
1950	115481	-	08-JUN-93	Cobalt	UNFL	.009	-	0	mg/L
1950	115481	-	08-JUN-93	Silicon	UNFL	15.500	-	0	mg/L
1950	115481	-	08-JUN-93	Manganese	UNFL	.286	-	.165	mg/L
1950	115481	-	08-JUN-93	Magnesium	UNFL	88.800	-	49.627	mg/L
1952	115468	-	15-MAY-93	Aluminum	UNFL	.216	-	.123	mg/L
1952	115468	-	15-MAY-93	Calcium	UNFL	201.000	-	125.574	mg/L
1952	115468	-	15-MAY-93	Silicon	UNFL	7.930	-	0	mg/L
1952	115468	-	15-MAY-93	Nickel	UNFL	.065	-	.026	mg/L
1952	115468	-	15-MAY-93	Manganese	UNFL	.529	-	.165	mg/L
1952	115468	-	15-MAY-93	Magnesium	UNFL	62.700	-	49.627	mg/L
1952	115471	-	15-MAY-93	Aluminum	UNFL	53.200	-	.123	mg/L
1952	115471	-	15-MAY-93	Barium	UNFL	.466	-	.459	mg/L
1952	115471	-	15-MAY-93	Beryllium	UNFL	.002	-	.0018	mg/L
1952	115471	-	15-MAY-93	Cobalt	UNFL	.026	-	0	mg/L
1952	115471	-	15-MAY-93	Iron	UNFL	75.000	-	10.965	mg/L
1952	115471	-	15-MAY-93	Manganese	UNFL	1.900	-	.165	mg/L

See footnotes at end of table

TABLE C-2K
(Continued)

SAMPLE LOCATION	SAMPLE ID	SAMPLE INTERVALS	SAMPLE DATE	PARAMETER	FILTER FLAG	RESULTS	VAL QUAL	BACKGROUND	UNITS
METALS (Continued)									
1952	115471	-	15-MAY-93	Zinc	UNFL	.212	-	.0317	mg/L
1952	115471	-	15-MAY-93	Vanadium	UNFL	.118	-	.0195	mg/L
1952	115471	-	15-MAY-93	Silicon	UNFL	72.100	-	0	mg/L
1952	115471	-	15-MAY-93	Nickel	UNFL	.118	-	.026	mg/L
1952	115471	-	15-MAY-93	Magnesium	UNFL	130.000	-	49.627	mg/L
1952	115471	-	15-MAY-93	Copper	UNFL	.071	-	.03	mg/L
1952	115471	-	15-MAY-93	Chromium	UNFL	.058	-	.0345	mg/L
1952	115471	-	15-MAY-93	Calcium	UNFL	398.000	-	125.574	mg/L
RADIONUCLIDES									
1035	111552	-	05-MAY-93	NP-237	UNFL	.300	N	0	pCi/L
1035	111552	-	05-MAY-93	PU-238	UNFL	.670	J	0	pCi/L
1035	111553	-	05-MAY-93	PU-239/240	FLTR	.380	-	0	pCi/L
1038	111548	-	05-MAY-93	U-234	UNFL	2.340	-	1.9	pCi/L
1038	111548	-	05-MAY-93	U-238	UNFL	1.560	-	1.07	pCi/L
1038	111548	-	05-MAY-93	U-TOTAL	UNFL	4.110	-	4	ug/L
1038	111549	-	05-MAY-93	NP-237	FLTR	.480	N	0	pCi/L
1038	111549	-	05-MAY-93	U-TOTAL	FLTR	4.950	-	4	ug/L
1038	111549	-	05-MAY-93	U-238	FLTR	1.670	-	1.07	pCi/L
1038	111549	-	05-MAY-93	U-235/236	FLTR	.050	J	0	pCi/L
1038	111549	-	05-MAY-93	U-234	FLTR	2.300	-	1.9	pCi/L
1038	111549	-	05-MAY-93	PU-239/240	FLTR	.160	-	0	pCi/L
1950	115480	-	08-JUN-93	U-234	UNFL	3.500	-	1.9	pCi/L
1950	115480	-	08-JUN-93	U-TOTAL	UNFL	7.670	-	4	ug/L
1950	115480	-	08-JUN-93	U-238	UNFL	2.820	-	1.07	pCi/L
1950	115480	-	08-JUN-93	U-235/236	UNFL	.208	-	0	pCi/L
1950	115481	-	08-JUN-93	NP-237	UNFL	1.940	N	0	pCi/L
1950	115481	-	08-JUN-93	TH-TOTAL	UNFL	5.960	-	3	ug/L
1950	115481	-	08-JUN-93	TH-232	UNFL	.654	J	0	pCi/L
1950	115481	-	08-JUN-93	PU-238	UNFL	.144	J	0	pCi/L
1950	115481	-	08-JUN-93	U-TOTAL	UNFL	11.000	-	4	ug/L
1950	115481	-	08-JUN-93	U-238	UNFL	4.830	-	1.07	pCi/L
1950	115481	-	08-JUN-93	U-234	UNFL	5.060	-	1.9	pCi/L
1952	115468	-	15-MAY-93	SR-90	UNFL	.900	J	0	pCi/L
1952	115468	-	15-MAY-93	U-235/236	UNFL	.412	J	0	pCi/L
1952	115468	-	15-MAY-93	U-234	UNFL	4.870	-	1.9	pCi/L
1952	115468	-	15-MAY-93	U-TOTAL	UNFL	15.800	-	4	ug/L
1952	115468	-	15-MAY-93	U-238	UNFL	6.770	-	1.07	pCi/L
1952	115471	-	15-MAY-93	PU-238	UNFL	.169	J	0	pCi/L

See footnotes at end of table

TABLE C-2K
(Continued)

SAMPLE LOCATION	SAMPLE ID	SAMPLE INTERVALS	SAMPLE DATE	PARAMETER	FILTER FLAG	RESULTS	VAL QUAL	BACKGROUND	UNITS
RADIONUCLIDES (Continued)									
1952	115471	-	15-MAY-93	SR-90	UNFL	1.350	J	0	pCi/L
1952	115471	-	15-MAY-93	RA-226	UNFL	5.110	-	1	pCi/L
1952	115471	-	15-MAY-93	TH-230	UNFL	13.800	-	2	pCi/L
1952	115471	-	15-MAY-93	TH-228	UNFL	14.000	-	1.04	pCi/L
1952	115471	-	15-MAY-93	U-TOTAL	UNFL	55.800	-	4	ug/L
1952	115471	-	15-MAY-93	U-238	UNFL	15.200	-	1.07	pCi/L
1952	115471	-	15-MAY-93	U-235/236	UNFL	.432	J	0	pCi/L
1952	115471	-	15-MAY-93	U-234	UNFL	12.000	-	1.9	pCi/L
1952	115471	-	15-MAY-93	TH-TOTAL	UNFL	104.000	-	3	ug/L
1952	115471	-	15-MAY-93	TH-232	UNFL	11.500	-	0	pCi/L
VOLATILE ORGANICS									
1952	115468	-	15-MAY-93	1,2-Dichloroethene	UNFL	16.000	-	0	ug/L
GENERAL CHEMISTRY									
1035	111552	-	05-MAY-93	Nitrate	UNFL	.930	J	.522	mg/L
1035	111552	-	05-MAY-93	Total Organic Nitrogen	UNFL	.210	-	0	mg/L
1035	111552	-	05-MAY-93	Total Kjeldahl Nitrogen	UNFL	.210	-	0	mg/L
1038	111548	-	05-MAY-93	Sulfate	UNFL	154.400	-	141.894	mg/L
1950	115480	-	08-JUN-93	Nitrate	UNFL	.800	J	.522	mg/L
1950	115480	-	08-JUN-93	Total Organic Halides	UNFL	.015	-	0	mg/L
1950	115480	-	08-JUN-93	Total Organic Nitrogen	UNFL	.260	-	0	mg/L
1950	115480	-	08-JUN-93	Sulfate	UNFL	190.700	-	141.894	mg/L
1950	115480	-	08-JUN-93	Total Kjeldahl Nitrogen	UNFL	.380	-	0	mg/L
1950	115480	-	08-JUN-93	Total Organic Carbon	UNFL	2.240	-	0	mg/L
1952	115468	-	15-MAY-93	Phosphorus	UNFL	.910	-	.223	mg/L
1952	115468	-	15-MAY-93	Total Organic Nitrogen	UNFL	.670	-	0	mg/L
1952	115468	-	15-MAY-93	Total Kjeldahl Nitrogen	UNFL	.670	-	0	mg/L
1952	115468	-	15-MAY-93	Total Organic Halides	UNFL	.094	J	0	mg/L
1952	115468	-	15-MAY-93	Total Organic Carbon	UNFL	2.800	-	0	mg/L

[a]Background concentrations established for metals are filtered while all other background parameters are unfiltered

FLTR = Filtered sample; filtered status identified on Request for Analysis/Chain of Custody

UNFL = Unfiltered sample; filtered status identified on Request for Analysis/Chain of Custody

TABLE C-2L

SOLID WASTE LANDFILL
CONCENTRATIONS OF DETECTED ANALYTES
ABOVE BACKGROUND[a] IN GROUNDWATER - 2000 SERIES
PHASE II FIELD INVESTIGATION
OPERABLE UNIT 2 REMEDIAL INVESTIGATION
FERNALD ENVIRONMENTAL MANAGEMENT PROJECT

SAMPLE LOCATION	SAMPLE ID	SAMPLE INTERVALS	SAMPLE DATE	PARAMETER	FILTER FLAG	DUPS	RESULTS	VAL QUAL	BACKGROUND	UNITS
METALS										
2027	111543	-	23-APR-93	Aluminum	FLTR		.303	-	.184	mg/L
2027	111543	-	23-APR-93	Calcium	FLTR		258.000	J	135.163	mg/L
2027	111543	-	23-APR-93	Magnesium	FLTR		61.300	J	38.07	mg/L
2027	111543	-	23-APR-93	Iron	FLTR		5.070	-	4	mg/L
2027	111543	-	23-APR-93	Potassium	FLTR		6.950	-	3.087	mg/L
2037	111540	-	22-APR-93	Calcium	FLTR		141.000	J	135.163	mg/L
2052	111546	-	29-APR-93	Calcium	FLTR		153.000	-	135.163	mg/L
2947	111572	-	19-MAY-93	Calcium	UNFL	DUP	160.000	-	135.163	mg/L
2947	111572	-	19-MAY-93	Iron	UNFL	DUP	4.730	-	4	mg/L
2947	111572	-	19-MAY-93	Potassium	UNFL	DUP	3.210	-	3.087	mg/L
2947	111574	-	19-MAY-93	Calcium	UNFL	DUP	158.000	-	135.163	mg/L
2947	111574	-	19-MAY-93	Iron	UNFL	DUP	4.740	-	4	mg/L
2947	115473	-	19-MAY-93	Calcium	UNFL		159.000	-	135.163	mg/L
2947	115473	-	19-MAY-93	Iron	UNFL		4.660	-	4	mg/L
2947	115473	-	19-MAY-93	Potassium	UNFL		3.190	-	3.087	mg/L
2947	115475	-	19-MAY-93	Calcium	UNFL		163.000	-	135.163	mg/L
2947	115475	-	19-MAY-93	Iron	UNFL		4.970	-	4	mg/L
2947	115475	-	19-MAY-93	Potassium	UNFL		3.260	-	3.087	mg/L
2951	115478	-	25-MAY-93	Aluminum	UNFL		1.230	-	.184	mg/L
2951	115478	-	25-MAY-93	Calcium	UNFL		142.000	-	135.163	mg/L
2951	115478	-	25-MAY-93	Iron	UNFL		7.230	-	4	mg/L
2953	115488	-	23-JUN-93	Aluminum	UNFL		.672	-	.184	mg/L
2953	115488	-	23-JUN-93	Calcium	FLTR		167.000	-	135.163	mg/L
2953	115488	-	23-JUN-93	Calcium	UNFL		161.000	-	135.163	mg/L
2953	115488	-	23-JUN-93	Iron	UNFL		6.710	-	4	mg/L
2953	115488	-	23-JUN-93	Iron	FLTR		5.640	-	4	mg/L
2953	115488	-	23-JUN-93	Aluminum	FLTR		.243	-	.184	mg/L

See footnotes at end of table

TABLE C-2L
(Continued)

SAMPLE LOCATION	SAMPLE ID	SAMPLE INTERVALS	SAMPLE DATE	PARAMETER	FILTER FLAG	DUPS	RESULTS	VAL QUAL	BACKGROUND	UNITS
RADIONUCLIDES										
2027	111543	-	23-APR-93	U-234	UNFL		4.740	-	1.9	pCi/L
2027	111543	-	23-APR-93	U-238	UNFL		3.690	-	.9	pCi/L
2027	111543	-	23-APR-93	U-TOTAL	UNFL		9.150	-	2.92	ug/L
2027	111543	-	23-APR-93	U-235/236	UNFL		.277	J	0	pCi/L
2037	111540	-	22-APR-93	SR-90	UNFL		2.100	J	0	pCi/L
2037	111540	-	22-APR-93	U-TOTAL	UNFL		4.500	-	2.92	ug/L
2037	111540	-	22-APR-93	U-238	UNFL		1.920	J	.9	pCi/L
2037	111540	-	22-APR-93	U-234	UNFL		2.050	J	1.9	pCi/L
2037	111540	-	22-APR-93	U-235/236	UNFL		.120	J	0	pCi/L
2052	111546	-	29-APR-93	PU-238	UNFL		.155	J	0	pCi/L
2052	111546	-	29-APR-93	U-TOTAL	UNFL		3.450	-	2.92	ug/L
2052	111546	-	29-APR-93	U-238	UNFL		1.360	-	.9	pCi/L
2947	111572	-	19-MAY-93	PU-238	UNFL	DUP	.066	J	0	pCi/L
2947	111572	-	19-MAY-93	SR-90	UNFL	DUP	1.210	J	.0	pCi/L
2947	111572	-	19-MAY-93	RA-226	UNFL	DUP	1.210	J	1.2	pCi/L
2947	111574	-	19-MAY-93	SR-90	UNFL	DUP	1.370	J	0	pCi/L
2947	111574	-	19-MAY-93	U-235/236	UNFL	DUP	.051	J	0	pCi/L
2947	115473	-	19-MAY-93	PU-238	FLTR		.890	J	0	pCi/L
2947	115473	-	19-MAY-93	RA-226	FLTR		1.280	J	1.2	pCi/L
2947	115473	-	19-MAY-93	SR-90	FLTR		.870	J	0	pCi/L
2947	115475	-	19-MAY-93	PU-238	UNFL		.052	J	0	pCi/L
2947	115475	-	19-MAY-93	RA-226	UNFL		1.340	J	1.2	pCi/L
2947	115475	-	19-MAY-93	U-235/236	UNFL		.050	J	0	pCi/L
2947	115475	-	19-MAY-93	SR-90	UNFL		1.370	J	0	pCi/L
2949	111489	-	17-APR-93	SR-90	UNKN		.692	J	0	pCi/L
2949	115479	-	26-MAY-93	PU-238	UNFL		.278	J	0	pCi/L
2949	115479	-	26-MAY-93	SR-90	UNFL		.754	J	0	pCi/L
2951	111536	-	01-MAY-93	SR-90	UNFL		2.380	J	0	pCi/L
2951	115478	-	25-MAY-93	NP-237	UNFL		.318	N	0	pCi/L
2951	115478	-	25-MAY-93	SR-90	UNFL		1.740	J	0	pCi/L
2953	115488	-	23-JUN-93	SR-90	UNFL		1.010	J	0	pCi/L
VOLATILE ORGANICS										
2052	111546	-	29-APR-93	Acetone	UNFL		2.000	J	0	ug/L
SEMIVOLATILE ORGANICS										
2949	111489	-	17-APR-93	Butyl benzyl phthalate	UNFL		1.000	J	0	ug/L
2953	115488	-	23-JUN-93	Butyl benzyl phthalate	UNFL		1.000	J	0	ug/L

See footnotes at end of table

TABLE C-2L
(Continued)

SAMPLE LOCATION	SAMPLE ID	SAMPLE INTERVALS	SAMPLE DATE	PARAMETER	FILTER FLAG	DUPS	RESULTS	VAL QUAL	BACKGROUND	UNITS
GENERAL CHEMISTRY										
2027	111543	-	23-APR-93	Total Kjeldahl Nitrogen	UNFL		.580	-	0	mg/L
2037	111540	-	22-APR-93	Total Kjeldahl Nitrogen	UNFL		.160	-	0	mg/L
2052	111546	-	29-APR-93	Total Kjeldahl Nitrogen	UNFL		.290	-	0	mg/L
2947	111572	-	19-MAY-93	Total Organic Halides	UNFL	DUP	.023	-	.021	mg/L
2947	115473	-	19-MAY-93	Total Organic Halides	UNFL		.024	-	.021	mg/L
2949	111489	-	17-APR-93	Total Kjeldahl Nitrogen	UNFL		.350	-	0	mg/L
2951	111536	-	01-MAY-93	Total Kjeldahl Nitrogen	UNFL		.220	-	0	mg/L
2953	115488	-	23-JUN-93	Total Kjeldahl Nitrogen	UNFL		.110	-	0	mg/L

[a]Background concentrations established for metals are filtered while all other background parameters are unfiltered

FLTR = Filtered sample; filtered status identified on Request for Analysis/Chain of Custody

UNFL = Unfiltered sample; filtered status identified on Request for Analysis/Chain of Custody

DUP = Duplicate Sample

TABLE C-3

TABLE C-3A

SOLID WASTE LANDFILL
RI/FS SURFACE SOIL RESULTS
OPERABLE UNIT 2 REMEDIAL INVESTIGATION
FERNALD ENVIRONMENTAL MANAGEMENT PROJECT

PHASE II - RADIOLOGICAL PARAMETERS

BORING NUMBER	SWL-SS-01			SWL-SS-02			SWL-SS-03		
SAMPLE NUMBER	111293			111297			111298		
	0 - 0.5			0 - 0.5			0 - 0.5		
SAMPLING DATE	04/01/93			04/01/93			04/01/93		
RADIOLOGICAL PARAMETERS	RESULTS	UNITS	VQ	RESULTS	UNITS	VQ	RESULTS	UNITS	VQ
CS-137	0.257	pci/g	-	0.103	pci/g	J	0.115	pci/g	UJ
GROSS ALPHA	37.600	pci/g	-	61.900	pci/g	-	85.800	pci/g	-
GROSS BETA	35.700	pci/g	-	77.200	pci/g	-	112.000	pci/g	-
NP-237	0.067	pci/g	R	0.115	pci/g	N	0.147	pci/g	N
PU-238	0.026	pci/g	UJ	0.057	pci/g	J	0.095	pci/g	J
PU-239/240	0.026	pci/g	UJ	0.019	pci/g	J	0.085	pci/g	J
RA-226	0.915	pci/g	-	1.160	pci/g	-	1.040	pci/g	-
RA-228	0.843	pci/g	-	1.010	pci/g	-	1.280	pci/g	-
RU-106	0.944	pci/g	UJ	0.668	pci/g	UJ	0.677	pci/g	UJ
SR-90	0.580	pci/g	J	1.230	pci/g	J	0.477	pci/g	UJ
TC-99	0.335	pci/g	UJ	0.334	pci/g	UJ	0.346	pci/g	UJ
TH-228	0.814	pci/g	-	1.080	pci/g	-	1.140	pci/g	-
TH-230	2.210	pci/g	-	3.740	pci/g	-	3.240	pci/g	-
TH-232	0.787	pci/g	-	0.981	pci/g	-	1.040	pci/g	-
TH-TOTAL	7.170	mg/kg	-	8.940	mg/kg	-	9.460	mg/kg	-
U-234	5.940	pci/g	-	13.500	pci/g	-	33.100	pci/g	-
U-235/236	0.512	pci/g	J	0.816	pci/g	-	1.920	pci/g	-
U-238	13.600	pci/g	-	34.600	pci/g	-	63.800	pci/g	-
U-TOTAL	39.800	mg/kg	-	114.000	mg/kg	-	194.000	mg/kg	-

000080

6508

TABLE C-3A
(Continued)

PHASE II - RADIOLOGICAL PARAMETERS

BORING NUMBER	SWL-SS-04			SWL-SS-05			SWL-SS-06		
SAMPLE NUMBER	111300			111301			111303		
	0 - 0.5			0 - 0.5			0 - 0.5		
SAMPLING DATE	04/01/93			04/01/93			04/01/93		
RADIOLOGICAL PARAMETERS	RESULTS	UNITS	VQ	RESULTS	UNITS	VQ	RESULTS	UNITS	VQ
CS-137	0.103	pci/g	UJ	0.121	pci/g	UJ	0.108	pci/g	J
GROSS ALPHA	76.700	pci/g	-	95.000	pci/g	-	21.000	pci/g	-
GROSS BETA	64.300	pci/g	-	91.600	pci/g	-	25.800	pci/g	-
NP-237	0.047	pci/g	R	0.194	pci/g	N	0.031	pci/g	R
PU-238	0.207	pci/g	J	0.072	pci/g	J	0.049	pci/g	J
PU-239/240	0.059	pci/g	UJ	0.126	pci/g	J	0.031	pci/g	UJ
RA-226	1.120	pci/g	-	1.590	pci/g	-	1.260	pci/g	-
RA-228	2.990	pci/g	-	1.300	pci/g	-	0.918	pci/g	-
RU-106	0.793	pci/g	UJ	0.923	pci/g	UJ	0.073	pci/g	UJ
SR-90	1.090	pci/g	J	0.525	pci/g	UJ	0.789	pci/g	J
TC-99	0.349	pci/g	UJ	0.327	pci/g	UJ	0.358	pci/g	UJ
TH-228	2.330	pci/g	-	1.410	pci/g	-	0.790	pci/g	-
TH-230	2.140	pci/g	-	9.610	pci/g	-	1.190	pci/g	-
TH-232	2.500	pci/g	-	1.250	pci/g	-	0.742	pci/g	-
TH-TOTAL	22.800	mg/kg	-	11.400	mg/kg	-	6.760	mg/kg	-
U-234	22.200	pci/g	-	48.900	pci/g	-	1.830	pci/g	-
U-235/236	1.260	pci/g	-	3.330	pci/g	-	0.120	pci/g	J
U-238	29.400	pci/g	-	49.400	pci/g	-	2.430	pci/g	-
U-TOTAL	90.800	mg/kg	-	143.000	mg/kg	-	9.770	mg/kg	J

TABLE C-3A
(Continued)

PHASE II - RADIOLOGICAL PARAMETERS

BORING NUMBER	SWL-SS-07			SWL-SS-08			SWL-SS-09		
SAMPLE NUMBER	111304			111492			111307		
	0 - 0.5			0 - 0.5			0 - 0.5		
SAMPLING DATE	04/02/93			04/19/93			04/02/93		
RADIOLOGICAL PARAMETERS	RESULTS	UNITS	VQ	RESULTS	UNITS	VQ	RESULTS	UNITS	VQ
CS-137	0.077	pci/g	UJ	0.072	pci/g	-	0.168	pci/g	J
GROSS ALPHA	23.400	pci/g	-	46.200	pci/g	-	31.000	pci/g	-
GROSS BETA	22.100	pci/g	-	54.100	pci/g	-	32.300	pci/g	-
NP-237	0.046	pci/g	N	0.075	pci/g	N	0.064	pci/g	N
PU-238	0.023	pci/g	J	0.902	pci/g	J	0.019	pci/g	J
PU-239/240	0.021	pci/g	UJ	0.113	pci/g	J	0.032	pci/g	J
RA-226	0.975	pci/g	-	1.120	pci/g	-	2.260	pci/g	-
RA-228	0.721	pci/g	-	1.450	pci/g	-	1.160	pci/g	-
RU-106	0.680	pci/g	UJ	0.953	pci/g	UJ	0.945	pci/g	UJ
SR-90	1.050	pci/g	J	0.432	pci/g	UJ	1.440	pci/g	J
TC-99	0.337	pci/g	UJ	0.373	pci/g	UJ	0.334	pci/g	UJ
TH-228	0.482	pci/g	J	1.210	pci/g	J	1.080	pci/g	-
TH-230	0.939	pci/g	-	3.130	pci/g	J	3.880	pci/g	-
TH-232	0.601	pci/g	-	1.040	pci/g	J	1.070	pci/g	-
TH-TOTAL	5.480	mg/kg	-	9.570	mg/kg	J	9.720	mg/kg	-
U-234	1.430	pci/g	-	12.400	pci/g	-	6.700	pci/g	-
U-235/236	0.076	pci/g	J	0.809	pci/g	-	0.398	pci/g	J
U-238	2.340	pci/g	-	26.900	pci/g	-	8.210	pci/g	-
U-TOTAL	6.860	mg/kg	J	97.000	mg/kg	-	27.500	mg/kg	J

TABLE C-3A
(Continued)

PHASE II - RADIOLOGICAL PARAMETERS

BORING NUMBER	SWL-SS-10			SWL-SS-11			SWL-SS-12		
SAMPLE NUMBER	111309			111310			111312		
	0 - 0.5			0 - 0.5			0 - 0.5		
SAMPLING DATE	04/02/93			04/02/93			04/02/93		
RADIOLOGICAL PARAMETERS	RESULTS	UNITS	VQ	RESULTS	UNITS	VQ	RESULTS	UNITS	VQ
CS-137	0.093	pci/g	UJ	0.074	pci/g	UJ	0.115	pci/g	UJ
GROSS ALPHA	31.900	pci/g	-	17.400	pci/g	-	41.500	pci/g	-
GROSS BETA	28.400	pci/g	-	27.800	pci/g	-	31.800	pci/g	-
NP-237	0.046	pci/g	N	0.043	pci/g	R	3.110	pci/g	N
PU-238	0.097	pci/g	J	0.015	pci/g	UJ	0.333	pci/g	J
PU-239/240	0.025	pci/g	J	0.023	pci/g	J	0.044	pci/g	UJ
RA-226	1.010	pci/g	-	0.920	pci/g	-	1.130	pci/g	-
RA-228	1.210	pci/g	-	0.847	pci/g	-	2.070	pci/g	-
RU-106	0.080	pci/g	UJ	0.695	pci/g	UJ	1.846	pci/g	UJ
SR-90	0.527	pci/g	J	0.422	pci/g	UJ	1.070	pci/g	J
TC-99	0.351	pci/g	UJ	0.358	pci/g	UJ	0.354	pci/g	UJ
TH-228	1.120	pci/g	R	0.906	pci/g	R	1.730	pci/g	R
TH-230	1.340	pci/g	R	1.210	pci/g	R	1.680	pci/g	R
TH-232	1.160	pci/g	R	0.677	pci/g	R	1.330	pci/g	R
TH-TOTAL	10.600	mg/kg	R	6.170	mg/kg	R	12.100	mg/kg	R
U-234	2.280	pci/g	-	4.970	pci/g	-	5.460	pci/g	-
U-235/236	0.120	pci/g	J	0.288	pci/g	-	0.346	pci/g	J
U-238	2.900	pci/g	-	6.680	pci/g	-	5.580	pci/g	-
U-TOTAL	10.500	mg/kg	J	19.500	mg/kg	J	18.700	mg/kg	-

000083

TABLE C-3A
(Continued)

PHASE II - CHEMICAL PARAMETERS

BORING NUMBER	SWL-SS-01			SWL-SS-02			SWL-SS-03		
SAMPLE NUMBER	111293			111297			111298		
	0-0.5			0-0.5			0-0.5		
SAMPLING DATE	04/01/93			04/01/93			04/01/93		
CHEMICAL PARAMETERS	RESULTS	UNITS	L VQ	RESULTS	UNITS	L VQ	RESULTS	UNITS	L VQ
Inorganics									
Aluminum	8940.000	mg/kg	C J	10200.000	mg/kg	C J	8060.000	mg/kg	C J
Antimony	1.200	mg/kg	C UJ	0.900	mg/kg	C UJ	0.930	mg/kg	C UJ
Arsenic	6.600	mg/kg	C -	6.700	mg/kg	C -	6.400	mg/kg	C -
Barium	58.700	mg/kg	C -	69.800	mg/kg	C -	72.100	mg/kg	C -
Beryllium	0.530	mg/kg	C -	0.550	mg/kg	C -	0.480	mg/kg	C -
Cadmium	1.200	mg/kg	C U	0.900	mg/kg	C U	0.930	mg/kg	C U
Calcium	69100.000	mg/kg	C J	36100.000	mg/kg	C J	112000.000	mg/kg	C J
Chromium	14.700	mg/kg	C -	12.000	mg/kg	C -	9.900	mg/kg	C -
Cobalt	4.600	mg/kg	C -	7.800	mg/kg	C -	5.100	mg/kg	C -
Copper	14.100	mg/kg	C -	15.500	mg/kg	C -	30.700	mg/kg	C -
Cyanide	0.130	mg/kg	C U	0.120	mg/kg	C U	0.110	mg/kg	C U
Iron	15300.000	mg/kg	C J	17800.000	mg/kg	C J	14700.000	mg/kg	C J
Lead	5.600	mg/kg	C -	13.000	mg/kg	C -	18.400	mg/kg	C -
Magnesium	22400.000	mg/kg	C -	9660.000	mg/kg	C -	37900.000	mg/kg	C -
Manganese	444.000	mg/kg	C J	508.000	mg/kg	C J	493.000	mg/kg	C J
Mercury	0.110	mg/kg	C U	0.110	mg/kg	C U	0.100	mg/kg	C U
Molybdenum	4.900	mg/kg	C UJ	5.300	mg/kg	C J	4.400	mg/kg	C J
Nickel	12.800	mg/kg	C -	12.900	mg/kg	C -	11.900	mg/kg	C -
Potassium	1280.000	mg/kg	C -	1050.000	mg/kg	C -	1180.000	mg/kg	C -
Selenium	0.490	mg/kg	C U	0.490	mg/kg	C U	0.350	mg/kg	C U
Silicon	933.000	mg/kg	C J	756.000	mg/kg	C J	523.000	mg/kg	C J
Silver	4.300	mg/kg	C -	5.100	mg/kg	C -	4.100	mg/kg	C -
Sodium	117.000	mg/kg	C -	91.600	mg/kg	C -	206.000	mg/kg	C -
Thallium	0.490	mg/kg	C U	0.490	mg/kg	C U	0.350	mg/kg	C U
Vanadium	24.200	mg/kg	C -	27.800	mg/kg	C -	19.700	mg/kg	C -
Zinc	83.400	mg/kg	C J	44.000	mg/kg	C J	35.800	mg/kg	C J
Volatile Organics									
1,1,1-Trichloroethane	13.000	ug/kg	C U	12.000	ug/kg	C U	11.000	ug/kg	C U
1,1,2,2-Tetrachloroethane	13.000	ug/kg	C U	12.000	ug/kg	C U	11.000	ug/kg	C U
1,1,2-Trichloroethane	13.000	ug/kg	C U	12.000	ug/kg	C U	11.000	ug/kg	C U
1,1-Dichloroethane	13.000	ug/kg	C U	12.000	ug/kg	C U	11.000	ug/kg	C U
1,1-Dichloroethene	13.000	ug/kg	C U	12.000	ug/kg	C U	11.000	ug/kg	C U
1,2-Dichloroethane	13.000	ug/kg	C U	12.000	ug/kg	C U	11.000	ug/kg	C U
1,2-Dichloroethene	13.000	ug/kg	C U	12.000	ug/kg	C U	11.000	ug/kg	C U
1,2-Dichloropropane	13.000	ug/kg	C U	12.000	ug/kg	C U	11.000	ug/kg	C U
2-Butanone	1.000	ug/kg	C J	12.000	ug/kg	C UJ	11.000	ug/kg	C UJ
2-Hexanone	13.000	ug/kg	C UJ	12.000	ug/kg	C UJ	11.000	ug/kg	C UJ
4-Methyl-2-pentanone	13.000	ug/kg	C UJ	12.000	ug/kg	C UJ	11.000	ug/kg	C UJ
Acetone	1.000	ug/kg	C J	2.000	ug/kg	C J	11.000	ug/kg	C UJ
Benzene	13.000	ug/kg	C U	12.000	ug/kg	C U	11.000	ug/kg	C U

TABLE C-3A
(Continued)

PHASE II - CHEMICAL PARAMETERS

BORING NUMBER	SWL-SS-01			SWL-SS-02			SWL-SS-03		
SAMPLE NUMBER	111293			111297			111298		
	0-0.5			0-0.5			0-0.5		
SAMPLING DATE	04/01/93			04/01/93			04/01/93		
CHEMICAL PARAMETERS	RESULTS	UNITS	L VQ	RESULTS	UNITS	L VQ	RESULTS	UNITS	L VQ
Volatile Organics									
Bromodichloromethane	13.000	ug/kg	C U	12.000	ug/kg	C U	11.000	ug/kg	C U
Bromoform	13.000	ug/kg	C U	12.000	ug/kg	C U	11.000	ug/kg	C U
Bromomethane	13.000	ug/kg	C U	12.000	ug/kg	C U	2.000	ug/kg	C J
Carbon Tetrachloride	13.000	ug/kg	C U	12.000	ug/kg	C U	11.000	ug/kg	C U
Carbon disulfide	13.000	ug/kg	C U	12.000	ug/kg	C U	11.000	ug/kg	C U
Chlorobenzene	13.000	ug/kg	C U	12.000	ug/kg	C U	11.000	ug/kg	C U
Chloroethane	13.000	ug/kg	C U	12.000	ug/kg	C U	11.000	ug/kg	C U
Chloroform	13.000	ug/kg	C U	12.000	ug/kg	C U	11.000	ug/kg	C U
Chloromethane	13.000	ug/kg	C U	12.000	ug/kg	C U	2.000	ug/kg	C J
Dibromochloromethane	13.000	ug/kg	C U	12.000	ug/kg	C U	11.000	ug/kg	C U
Ethylbenzene	13.000	ug/kg	C U	12.000	ug/kg	C U	11.000	ug/kg	C U
Methylene chloride	13.000	ug/kg	C U	12.000	ug/kg	C U	11.000	ug/kg	C U
Styrene	13.000	ug/kg	C U	12.000	ug/kg	C U	11.000	ug/kg	C U
Tetrachloroethene	13.000	ug/kg	C U	12.000	ug/kg	C U	11.000	ug/kg	C U
Toluene	13.000	ug/kg	C U	12.000	ug/kg	C U	11.000	ug/kg	C U
Trichloroethene	13.000	ug/kg	C U	12.000	ug/kg	C U	11.000	ug/kg	C U
Vinyl Acetate	13.000	ug/kg	C U	12.000	ug/kg	C U	11.000	ug/kg	C U
Vinyl chloride	13.000	ug/kg	C UJ	12.000	ug/kg	C UJ	11.000	ug/kg	C UJ
Xylenes, Total	13.000	ug/kg	C U	12.000	ug/kg	C U	11.000	ug/kg	C U
cis-1,3-Dichloropropene	13.000	ug/kg	C U	12.000	ug/kg	C U	11.000	ug/kg	C U
trans-1,3-Dichloropropene	13.000	ug/kg	C U	12.000	ug/kg	C U	11.000	ug/kg	C U
Semivolatile Organics									
1,2,4-Trichlorobenzene	430.000	ug/kg	C UJ	410.000	ug/kg	C UJ	390.000	ug/kg	C UJ
1,2-Dichlorobenzene	430.000	ug/kg	C UJ	410.000	ug/kg	C UJ	390.000	ug/kg	C UJ
1,3-Dichlorobenzene	430.000	ug/kg	C UJ	410.000	ug/kg	C UJ	390.000	ug/kg	C UJ
1,4-Dichlorobenzene	430.000	ug/kg	C UJ	410.000	ug/kg	C UJ	390.000	ug/kg	C UJ
2,4,5-Trichlorophenol	1000.000	ug/kg	C UJ	1000.000	ug/kg	C UJ	940.000	ug/kg	C UJ
2,4,6-Trichlorophenol	430.000	ug/kg	C UJ	410.000	ug/kg	C UJ	390.000	ug/kg	C UJ
2,4-Dichlorophenol	430.000	ug/kg	C UJ	410.000	ug/kg	C UJ	390.000	ug/kg	C UJ
2,4-Dimethylphenol	430.000	ug/kg	C UJ	410.000	ug/kg	C UJ	390.000	ug/kg	C UJ
2,4-Dinitrophenol	1000.000	ug/kg	C UJ	1000.000	ug/kg	C UJ	940.000	ug/kg	C UJ
2,4-Dinitrotoluene	430.000	ug/kg	C UJ	410.000	ug/kg	C UJ	390.000	ug/kg	C UJ
2,6-Dinitrotoluene	430.000	ug/kg	C UJ	410.000	ug/kg	C UJ	390.000	ug/kg	C UJ
2-Chloronaphthalene	430.000	ug/kg	C UJ	410.000	ug/kg	C UJ	390.000	ug/kg	C UJ
2-Chlorophenol	430.000	ug/kg	C UJ	410.000	ug/kg	C UJ	390.000	ug/kg	C UJ
2-Methylnaphthalene	430.000	ug/kg	C UJ	410.000	ug/kg	C UJ	390.000	ug/kg	C UJ
2-Methylphenol	430.000	ug/kg	C UJ	410.000	ug/kg	C UJ	390.000	ug/kg	C UJ
2-Nitroaniline	1000.000	ug/kg	C UJ	1000.000	ug/kg	C UJ	940.000	ug/kg	C UJ
2-Nitrophenol	430.000	ug/kg	C UJ	410.000	ug/kg	C UJ	390.000	ug/kg	C UJ
3,3'-Dichlorobenzidine	430.000	ug/kg	C UJ	410.000	ug/kg	C UJ	390.000	ug/kg	C UJ

000085

TABLE C-3A
(Continued)

PHASE II - CHEMICAL PARAMETERS

BORING NUMBER	SWL-SS-01				SWL-SS-02				SWL-SS-03			
SAMPLE NUMBER	111293				111297				111298			
	0-0.5				0-0.5				0-0.5			
SAMPLING DATE	04/01/93				04/01/93				04/01/93			
CHEMICAL PARAMETERS	RESULTS	UNITS	L	VQ	RESULTS	UNITS	L	VQ	RESULTS	UNITS	L	VQ
Semivolatile Organics												
3-Nitroaniline	1000.000	ug/kg	C	UJ	1000.000	ug/kg	C	UJ	940.000	ug/kg	C	UJ
4,6-Dinitro-2-methylphenol	1000.000	ug/kg	C	UJ	1000.000	ug/kg	C	UJ	940.000	ug/kg	C	UJ
4-Bromophenyl phenyl ether	430.000	ug/kg	C	UJ	410.000	ug/kg	C	UJ	390.000	ug/kg	C	UJ
4-Chloro-3-methylphenol	430.000	ug/kg	C	UJ	410.000	ug/kg	C	UJ	390.000	ug/kg	C	UJ
4-Chlorophenylphenyl ether	430.000	ug/kg	C	UJ	410.000	ug/kg	C	UJ	390.000	ug/kg	C	UJ
4-Methylphenol	430.000	ug/kg	C	UJ	410.000	ug/kg	C	UJ	390.000	ug/kg	C	UJ
4-Nitroaniline	1000.000	ug/kg	C	UJ	1000.000	ug/kg	C	UJ	940.000	ug/kg	C	UJ
4-Nitrophenol	1000.000	ug/kg	C	UJ	1000.000	ug/kg	C	UJ	940.000	ug/kg	C	UJ
Acenaphthene	120.000	ug/kg	C	J	410.000	ug/kg	C	UJ	390.000	ug/kg	C	UJ
Acenaphthylene	430.000	ug/kg	C	UJ	410.000	ug/kg	C	UJ	390.000	ug/kg	C	UJ
Anthracene	230.000	ug/kg	C	J	410.000	ug/kg	C	UJ	390.000	ug/kg	C	UJ
Benzo(a)anthracene	880.000	ug/kg	C	J	410.000	ug/kg	C	UJ	110.000	ug/kg	C	J
Benzo(a)pyrene	760.000	ug/kg	C	J	410.000	ug/kg	C	UJ	110.000	ug/kg	C	J
Benzo(b)fluoranthene	710.000	ug/kg	C	J	410.000	ug/kg	C	UJ	96.000	ug/kg	C	J
Benzo(g,h,i)perylene	500.000	ug/kg	C	J	410.000	ug/kg	C	UJ	82.000	ug/kg	C	J
Benzo(k)fluoranthene	880.000	ug/kg	C	J	410.000	ug/kg	C	UJ	150.000	ug/kg	C	J
Benzoic acid	2100.000	ug/kg	C	UJ	2000.000	ug/kg	C	UJ	1900.000	ug/kg	C	UJ
Benzyl alcohol	430.000	ug/kg	C	UJ	410.000	ug/kg	C	UJ	390.000	ug/kg	C	UJ
Butyl benzyl phthalate	430.000	ug/kg	C	UJ	410.000	ug/kg	C	UJ	390.000	ug/kg	C	UJ
Carbazole	77.000	ug/kg	C	J	410.000	ug/kg	C	UJ	390.000	ug/kg	C	UJ
Chrysene	1100.000	ug/kg	C	J	45.000	ug/kg	C	J	150.000	ug/kg	C	J
Di-n-butyl phthalate	430.000	ug/kg	C	UJ	410.000	ug/kg	C	UJ	390.000	ug/kg	C	UJ
Di-n-octyl phthalate	430.000	ug/kg	C	UJ	410.000	ug/kg	C	UJ	390.000	ug/kg	C	UJ
Dibenzo(a,h)anthracene	200.000	ug/kg	C	J	410.000	ug/kg	C	UJ	390.000	ug/kg	C	UJ
Dibenzofuran	56.000	ug/kg	C	J	410.000	ug/kg	C	UJ	390.000	ug/kg	C	UJ
Diethyl phthalate	430.000	ug/kg	C	UJ	410.000	ug/kg	C	UJ	390.000	ug/kg	C	UJ
Dimethyl phthalate	430.000	ug/kg	C	UJ	410.000	ug/kg	C	UJ	390.000	ug/kg	C	UJ
Fluoranthene	1900.000	ug/kg	C	J	57.000	ug/kg	C	J	260.000	ug/kg	C	J
Fluorene	100.000	ug/kg	C	J	410.000	ug/kg	C	UJ	390.000	ug/kg	C	UJ
Hexachlorobenzene	430.000	ug/kg	C	UJ	410.000	ug/kg	C	UJ	390.000	ug/kg	C	UJ
Hexachlorobutadiene	430.000	ug/kg	C	UJ	410.000	ug/kg	C	UJ	390.000	ug/kg	C	UJ
Hexachlorocyclopentadiene	430.000	ug/kg	C	UJ	410.000	ug/kg	C	UJ	390.000	ug/kg	C	UJ
Hexachloroethane	430.000	ug/kg	C	UJ	410.000	ug/kg	C	UJ	390.000	ug/kg	C	UJ
Indeno(1,2,3-cd)pyrene	480.000	ug/kg	C	J	410.000	ug/kg	C	UJ	73.000	ug/kg	C	J
Isophorone	430.000	ug/kg	C	UJ	410.000	ug/kg	C	UJ	390.000	ug/kg	C	UJ
N-Nitroso-di-n-propylamine	430.000	ug/kg	C	UJ	410.000	ug/kg	C	UJ	390.000	ug/kg	C	UJ
N-Nitrosodiphenylamine	430.000	ug/kg	C	UJ	410.000	ug/kg	C	UJ	390.000	ug/kg	C	UJ
Naphthalene	430.000	ug/kg	C	UJ	410.000	ug/kg	C	UJ	390.000	ug/kg	C	UJ
Nitrobenzene	430.000	ug/kg	C	UJ	410.000	ug/kg	C	UJ	390.000	ug/kg	C	UJ
Pentachlorophenol	1000.000	ug/kg	C	UJ	1000.000	ug/kg	C	UJ	940.000	ug/kg	C	UJ
Phenanthrene	1500.000	ug/kg	C	J	410.000	ug/kg	C	UJ	150.000	ug/kg	C	J
Phenol	430.000	ug/kg	C	UJ	410.000	ug/kg	C	UJ	390.000	ug/kg	C	UJ

TABLE C-3A
(Continued)

PHASE II - CHEMICAL PARAMETERS

BORING NUMBER	SWL-SS-01				SWL-SS-02				SWL-SS-03			
SAMPLE NUMBER	111293				111297				111298			
	0-0.5				0-0.5				0-0.5			
SAMPLING DATE	04/01/93				04/01/93				04/01/93			
CHEMICAL PARAMETERS	RESULTS	UNITS	L	VQ	RESULTS	UNITS	L	VQ	RESULTS	UNITS	L	VQ
Semivolatile Organics												
Pyrene	2100.000	ug/kg	C	J	55.000	ug/kg	C	J	260.000	ug/kg	C	J
bis(2-Chloroethoxy)methane	430.000	ug/kg	C	UJ	410.000	ug/kg	C	UJ	390.000	ug/kg	C	UJ
bis(2-Chloroethyl)ether	430.000	ug/kg	C	UJ	410.000	ug/kg	C	UJ	390.000	ug/kg	C	UJ
bis(2-Chloroisopropyl) ether	430.000	ug/kg	C	UJ	410.000	ug/kg	C	UJ	390.000	ug/kg	C	UJ
bis(2-Ethylhexyl) phthalate	430.000	ug/kg	C	UJ	410.000	ug/kg	C	UJ	390.000	ug/kg	C	UJ
p-Chloroaniline	430.000	ug/kg	C	UJ	410.000	ug/kg	C	UJ	390.000	ug/kg	C	UJ
Pesticide Organics/PCBs												
4,4'-DDD	4.300	ug/kg	C	UJ	4.100	ug/kg	C	UJ	3.800	ug/kg	C	UJ
4,4'-DDE	4.300	ug/kg	C	U	4.100	ug/kg	C	U	3.800	ug/kg	C	U
4,4'-DDT	4.300	ug/kg	C	U	4.100	ug/kg	C	U	3.800	ug/kg	C	U
Aldrin	2.200	ug/kg	C	U	2.100	ug/kg	C	U	2.000	ug/kg	C	U
Aroclor-1016	43.000	ug/kg	C	U	41.000	ug/kg	C	U	38.000	ug/kg	C	U
Aroclor-1221	87.000	ug/kg	C	U	84.000	ug/kg	C	U	78.000	ug/kg	C	U
Aroclor-1232	43.000	ug/kg	C	U	41.000	ug/kg	C	U	38.000	ug/kg	C	U
Aroclor-1242	43.000	ug/kg	C	U	41.000	ug/kg	C	U	38.000	ug/kg	C	U
Aroclor-1248	43.000	ug/kg	C	U	41.000	ug/kg	C	U	38.000	ug/kg	C	U
Aroclor-1254	43.000	ug/kg	C	U	41.000	ug/kg	C	U	38.000	ug/kg	C	U
Aroclor-1260	43.000	ug/kg	C	U	41.000	ug/kg	C	U	38.000	ug/kg	C	U
Dieldrin	4.300	ug/kg	C	U	4.100	ug/kg	C	U	3.800	ug/kg	C	U
Endosulfan II	4.300	ug/kg	C	U	4.100	ug/kg	C	U	3.800	ug/kg	C	U
Endosulfan sulfate	4.300	ug/kg	C	U	4.100	ug/kg	C	U	3.800	ug/kg	C	U
Endosulfan-I	2.200	ug/kg	C	U	2.100	ug/kg	C	U	2.000	ug/kg	C	U
Endrin	4.300	ug/kg	C	U	4.100	ug/kg	C	U	3.800	ug/kg	C	U
Endrin aldehyde	4.300	ug/kg	C	U	4.100	ug/kg	C	U	3.800	ug/kg	C	U
Endrin ketone	4.300	ug/kg	C	U	4.100	ug/kg	C	U	3.800	ug/kg	C	U
Heptachlor	2.200	ug/kg	C	U	2.100	ug/kg	C	U	2.000	ug/kg	C	U
Heptachlor epoxide	2.200	ug/kg	C	U	2.100	ug/kg	C	U	2.000	ug/kg	C	U
Methoxychlor	22.000	ug/kg	C	U	21.000	ug/kg	C	U	20.000	ug/kg	C	U
Toxaphene	220.000	ug/kg	C	U	210.000	ug/kg	C	U	200.000	ug/kg	C	U
alpha-BHC	2.200	ug/kg	C	U	2.100	ug/kg	C	U	2.000	ug/kg	C	U
alpha-Chlordane	2.200	ug/kg	C	U	2.100	ug/kg	C	U	2.000	ug/kg	C	U
beta-BHC	2.200	ug/kg	C	U	2.100	ug/kg	C	U	2.000	ug/kg	C	U
delta-BHC	2.200	ug/kg	C	U	2.100	ug/kg	C	U	2.000	ug/kg	C	U
gamma-BHC (Lindane)	2.200	ug/kg	C	U	2.100	ug/kg	C	U	2.000	ug/kg	C	U
gamma-Chlordane	2.200	ug/kg	C	U	2.100	ug/kg	C	U	2.000	ug/kg	C	U

000087

TABLE C-3A
(Continued)

PHASE II - CHEMICAL PARAMETERS

BORING NUMBER	SWL-SS-04			SWL-SS-05			SWL-SS-06		
SAMPLE NUMBER	111300			111301			111303		
	0-0.5			0-0.5			0-0.5		
SAMPLING DATE	04/01/93			04/01/93			04/01/93		
CHEMICAL PARAMETERS	RESULTS	UNITS	L VQ	RESULTS	UNITS	L VQ	RESULTS	UNITS	L VQ
Inorganics									
Aluminum	13800.000	mg/kg	C J	9730.000	mg/kg	C J	11000.000	mg/kg	D J
Antimony	0.960	mg/kg	C UJ	1.200	mg/kg	C UJ	0.840	mg/kg	D UJ
Arsenic	6.100	mg/kg	C -	8.300	mg/kg	C -	6.000	mg/kg	D -
Barium	88.000	mg/kg	C -	95.700	mg/kg	C -	78.100	mg/kg	D -
Beryllium	0.720	mg/kg	C -	0.580	mg/kg	C -	0.570	mg/kg	D -
Cadmium	0.960	mg/kg	C U	1.200	mg/kg	C U	0.840	mg/kg	D U
Calcium	71900.000	mg/kg	C J	66600.000	mg/kg	C J	64800.000	mg/kg	D J
Chromium	16.300	mg/kg	C -	13.100	mg/kg	C -	12.300	mg/kg	D -
Cobalt	7.700	mg/kg	C -	10.200	mg/kg	C -	4.800	mg/kg	D -
Copper	19.900	mg/kg	C -	57.600	mg/kg	C -	14.100	mg/kg	D -
Cyanide	0.140	mg/kg	C U	0.120	mg/kg	C U	0.120	mg/kg	D U
Iron	24000.000	mg/kg	C J	18700.000	mg/kg	C J	16100.000	mg/kg	D J
Lead	5.300	mg/kg	C -	16.300	mg/kg	C -	12.800	mg/kg	D -
Magnesium	18800.000	mg/kg	C -	18200.000	mg/kg	C -	32800.000	mg/kg	D -
Manganese	555.000	mg/kg	C J	826.000	mg/kg	C J	553.000	mg/kg	D J
Mercury	0.130	mg/kg	C U	0.110	mg/kg	C U	0.100	mg/kg	D U
Molybdenum	7.300	mg/kg	C J	6.100	mg/kg	C J	5.300	mg/kg	D J
Nickel	18.600	mg/kg	C -	23.100	mg/kg	C -	13.100	mg/kg	D -
Potassium	1700.000	mg/kg	C -	1490.000	mg/kg	C -	1740.000	mg/kg	D -
Selenium	0.480	mg/kg	C U	0.370	mg/kg	C U	0.480	mg/kg	D U
Silicon	453.000	mg/kg	C J	583.000	mg/kg	C J	792.000	mg/kg	D J
Silver	7.000	mg/kg	C -	5.500	mg/kg	C -	4.700	mg/kg	D -
Sodium	149.000	mg/kg	C -	118.000	mg/kg	C -	133.000	mg/kg	D -
Thallium	0.480	mg/kg	C U	0.370	mg/kg	C U	0.480	mg/kg	D U
Vanadium	34.900	mg/kg	C -	26.200	mg/kg	C -	27.900	mg/kg	D -
Zinc	55.900	mg/kg	C J	48.700	mg/kg	C J	46.900	mg/kg	D J
Volatile Organics									
1,1,1-Trichloroethane	14.000	ug/kg	C U	12.000	ug/kg	C U	12.000	ug/kg	C U
1,1,2,2-Tetrachloroethane	14.000	ug/kg	C U	12.000	ug/kg	C U	12.000	ug/kg	C U
1,1,2-Trichloroethane	14.000	ug/kg	C U	12.000	ug/kg	C U	12.000	ug/kg	C U
1,1-Dichloroethane	14.000	ug/kg	C U	12.000	ug/kg	C U	12.000	ug/kg	C U
1,1-Dichloroethene	14.000	ug/kg	C U	12.000	ug/kg	C U	12.000	ug/kg	C U
1,2-Dichloroethane	14.000	ug/kg	C U	12.000	ug/kg	C U	12.000	ug/kg	C U
1,2-Dichloroethene	14.000	ug/kg	C U	12.000	ug/kg	C U	12.000	ug/kg	C U
1,2-Dichloropropane	14.000	ug/kg	C U	12.000	ug/kg	C U	12.000	ug/kg	C U
2-Butanone	14.000	ug/kg	C UJ	12.000	ug/kg	C UJ	12.000	ug/kg	C UJ
2-Hexanone	14.000	ug/kg	C UJ	12.000	ug/kg	C UJ	12.000	ug/kg	C UJ
4-Methyl-2-pentanone	14.000	ug/kg	C UJ	12.000	ug/kg	C UJ	12.000	ug/kg	C UJ
Acetone	14.000	ug/kg	C UJ	12.000	ug/kg	C UJ	12.000	ug/kg	C UJ
Benzene	14.000	ug/kg	C U	12.000	ug/kg	C U	12.000	ug/kg	C U

000088

6508

TABLE C-3A
(Continued)

PHASE II - CHEMICAL PARAMETERS

BORING NUMBER	SWL-SS-04				SWL-SS-05				SWL-SS-06			
SAMPLE NUMBER	111300				111301				111303			
	0-0.5				0-0.5				0-0.5			
SAMPLING DATE	04/01/93				04/01/93				04/01/93			
CHEMICAL PARAMETERS	RESULTS	UNITS	L	VQ	RESULTS	UNITS	L	VQ	RESULTS	UNITS	L	VQ
Volatile Organics												
Bromodichloromethane	14.000	ug/kg	C	U	12.000	ug/kg	C	U	12.000	ug/kg	C	U
Bromoform	14.000	ug/kg	C	U	12.000	ug/kg	C	U	12.000	ug/kg	C	U
Bromomethane	14.000	ug/kg	C	U	12.000	ug/kg	C	U	12.000	ug/kg	C	U
Carbon Tetrachloride	14.000	ug/kg	C	U	12.000	ug/kg	C	U	12.000	ug/kg	C	U
Carbon disulfide	14.000	ug/kg	C	U	12.000	ug/kg	C	U	12.000	ug/kg	C	U
Chlorobenzene	14.000	ug/kg	C	U	12.000	ug/kg	C	U	12.000	ug/kg	C	U
Chloroethane	14.000	ug/kg	C	U	12.000	ug/kg	C	U	12.000	ug/kg	C	U
Chloroform	14.000	ug/kg	C	U	12.000	ug/kg	C	U	12.000	ug/kg	C	U
Chloromethane	14.000	ug/kg	C	U	12.000	ug/kg	C	U	12.000	ug/kg	C	U
Dibromochloromethane	14.000	ug/kg	C	U	12.000	ug/kg	C	U	12.000	ug/kg	C	U
Ethylbenzene	14.000	ug/kg	C	U	12.000	ug/kg	C	U	12.000	ug/kg	C	U
Methylene chloride	14.000	ug/kg	C	U	12.000	ug/kg	C	U	12.000	ug/kg	C	U
Styrene	14.000	ug/kg	C	U	12.000	ug/kg	C	U	12.000	ug/kg	C	U
Tetrachloroethene	14.000	ug/kg	C	U	12.000	ug/kg	C	U	12.000	ug/kg	C	U
Toluene	14.000	ug/kg	C	U	12.000	ug/kg	C	U	12.000	ug/kg	C	U
Trichloroethene	14.000	ug/kg	C	U	12.000	ug/kg	C	U	12.000	ug/kg	C	U
Vinyl Acetate	14.000	ug/kg	C	U	12.000	ug/kg	C	U	12.000	ug/kg	C	U
Vinyl chloride	14.000	ug/kg	C	UJ	12.000	ug/kg	C	UJ	12.000	ug/kg	C	UJ
Xylenes, Total	14.000	ug/kg	C	U	12.000	ug/kg	C	U	12.000	ug/kg	C	U
cis-1,3-Dichloropropene	14.000	ug/kg	C	U	12.000	ug/kg	C	U	12.000	ug/kg	C	U
trans-1,3-Dichloropropene	14.000	ug/kg	C	U	12.000	ug/kg	C	U	12.000	ug/kg	C	U
Semivolatile Organics												
1,2,4-Trichlorobenzene	460.000	ug/kg	C	UJ	410.000	ug/kg	C	UJ	410.000	ug/kg	C	UJ
1,2-Dichlorobenzene	460.000	ug/kg	C	UJ	410.000	ug/kg	C	UJ	410.000	ug/kg	C	UJ
1,3-Dichlorobenzene	460.000	ug/kg	C	UJ	410.000	ug/kg	C	UJ	410.000	ug/kg	C	UJ
1,4-Dichlorobenzene	460.000	ug/kg	C	UJ	410.000	ug/kg	C	UJ	410.000	ug/kg	C	UJ
2,4,5-Trichlorophenol	1100.000	ug/kg	C	UJ	1000.000	ug/kg	C	UJ	980.000	ug/kg	C	UJ
2,4,6-Trichlorophenol	460.000	ug/kg	C	UJ	410.000	ug/kg	C	UJ	410.000	ug/kg	C	UJ
2,4-Dichlorophenol	460.000	ug/kg	C	UJ	410.000	ug/kg	C	UJ	410.000	ug/kg	C	UJ
2,4-Dimethylphenol	460.000	ug/kg	C	UJ	410.000	ug/kg	C	UJ	410.000	ug/kg	C	UJ
2,4-Dinitrophenol	1100.000	ug/kg	C	UJ	1000.000	ug/kg	C	UJ	980.000	ug/kg	C	UJ
2,4-Dinitrotoluene	460.000	ug/kg	C	UJ	410.000	ug/kg	C	UJ	410.000	ug/kg	C	UJ
2,6-Dinitrotoluene	460.000	ug/kg	C	UJ	410.000	ug/kg	C	UJ	410.000	ug/kg	C	UJ
2-Chloronaphthalene	460.000	ug/kg	C	UJ	410.000	ug/kg	C	UJ	410.000	ug/kg	C	UJ
2-Chlorophenol	460.000	ug/kg	C	UJ	410.000	ug/kg	C	UJ	410.000	ug/kg	C	UJ
2-Methylnaphthalene	460.000	ug/kg	C	UJ	410.000	ug/kg	C	UJ	410.000	ug/kg	C	UJ
2-Methylphenol	460.000	ug/kg	C	UJ	410.000	ug/kg	C	UJ	410.000	ug/kg	C	UJ
2-Nitroaniline	1100.000	ug/kg	C	UJ	1000.000	ug/kg	C	UJ	980.000	ug/kg	C	UJ
2-Nitrophenol	460.000	ug/kg	C	UJ	410.000	ug/kg	C	UJ	410.000	ug/kg	C	UJ
3,3'-Dichlorobenzidine	460.000	ug/kg	C	UJ	410.000	ug/kg	C	UJ	410.000	ug/kg	C	UJ

000089

TABLE C-3A
(Continued)

PHASE II - CHEMICAL PARAMETERS

BORING NUMBER	SWL-SS-04			SWL-SS-05			SWL-SS-06		
SAMPLE NUMBER	111300			111301			111303		
	0-0.5			0-0.5			0-0.5		
SAMPLING DATE	04/01/93			04/01/93			04/01/93		
CHEMICAL PARAMETERS	RESULTS	UNITS	L VQ	RESULTS	UNITS	L VQ	RESULTS	UNITS	L VQ
Semivolatile Organics									
3-Nitroaniline	1100.000	ug/kg	C UJ	1000.000	ug/kg	C UJ	980.000	ug/kg	C UJ
4,6-Dinitro-2-methylphenol	1100.000	ug/kg	C UJ	1000.000	ug/kg	C UJ	980.000	ug/kg	C UJ
4-Bromophenyl phenyl ether	460.000	ug/kg	C UJ	410.000	ug/kg	C UJ	410.000	ug/kg	C UJ
4-Chloro-3-methylphenol	460.000	ug/kg	C UJ	410.000	ug/kg	C UJ	410.000	ug/kg	C UJ
4-Chlorophenylphenyl ether	460.000	ug/kg	C UJ	410.000	ug/kg	C UJ	410.000	ug/kg	C UJ
4-Methylphenol	460.000	ug/kg	C UJ	410.000	ug/kg	C UJ	410.000	ug/kg	C UJ
4-Nitroaniline	1100.000	ug/kg	C UJ	1000.000	ug/kg	C UJ	980.000	ug/kg	C UJ
4-Nitrophenol	1100.000	ug/kg	C UJ	1000.000	ug/kg	C UJ	980.000	ug/kg	C UJ
Acenaphthene	460.000	ug/kg	C UJ	410.000	ug/kg	C UJ	49.000	ug/kg	C J
Acenaphthylene	460.000	ug/kg	C UJ	410.000	ug/kg	C UJ	410.000	ug/kg	C UJ
Anthracene	460.000	ug/kg	C UJ	410.000	ug/kg	C UJ	120.000	ug/kg	C J
Benzo(a)anthracene	140.000	ug/kg	C J	55.000	ug/kg	C J	220.000	ug/kg	C J
Benzo(a)pyrene	140.000	ug/kg	C J	59.000	ug/kg	C J	190.000	ug/kg	C J
Benzo(b)fluoranthene	140.000	ug/kg	C J	410.000	ug/kg	C UJ	150.000	ug/kg	C J
Benzo(g,h,i)perylene	93.000	ug/kg	C J	410.000	ug/kg	C UJ	100.000	ug/kg	C J
Benzo(k)fluoranthene	140.000	ug/kg	C J	78.000	ug/kg	C J	210.000	ug/kg	C J
Benzoic acid	2200.000	ug/kg	C UJ	2000.000	ug/kg	C UJ	2000.000	ug/kg	C UJ
Benzyl alcohol	460.000	ug/kg	C UJ	410.000	ug/kg	C UJ	410.000	ug/kg	C UJ
Butyl benzyl phthalate	460.000	ug/kg	C UJ	410.000	ug/kg	C UJ	410.000	ug/kg	C UJ
Carbazole	460.000	ug/kg	C UJ	410.000	ug/kg	C UJ	410.000	ug/kg	C UJ
Chrysene	180.000	ug/kg	C J	77.000	ug/kg	C J	250.000	ug/kg	C J
Di-n-butyl phthalate	55.000	ug/kg	C J	410.000	ug/kg	C UJ	410.000	ug/kg	C UJ
Di-n-octyl phthalate	460.000	ug/kg	C UJ	410.000	ug/kg	C UJ	410.000	ug/kg	C UJ
Dibenzo(a,h)anthracene	460.000	ug/kg	C UJ	410.000	ug/kg	C UJ	56.000	ug/kg	C J
Dibenzofuran	460.000	ug/kg	C UJ	410.000	ug/kg	C UJ	410.000	ug/kg	C UJ
Diethyl phthalate	460.000	ug/kg	C UJ	410.000	ug/kg	C UJ	410.000	ug/kg	C UJ
Dimethyl phthalate	460.000	ug/kg	C UJ	410.000	ug/kg	C UJ	410.000	ug/kg	C UJ
Fluoranthene	300.000	ug/kg	C J	130.000	ug/kg	C J	530.000	ug/kg	C J
Fluorene	460.000	ug/kg	C UJ	410.000	ug/kg	C UJ	56.000	ug/kg	C J
Hexachlorobenzene	460.000	ug/kg	C UJ	410.000	ug/kg	C UJ	410.000	ug/kg	C UJ
Hexachlorobutadiene	460.000	ug/kg	C UJ	410.000	ug/kg	C UJ	410.000	ug/kg	C UJ
Hexachlorocyclopentadiene	460.000	ug/kg	C UJ	410.000	ug/kg	C UJ	410.000	ug/kg	C UJ
Hexachloroethane	460.000	ug/kg	C UJ	410.000	ug/kg	C UJ	410.000	ug/kg	C UJ
Indeno(1,2,3-cd)pyrene	91.000	ug/kg	C J	410.000	ug/kg	C UJ	100.000	ug/kg	C J
Isophorone	460.000	ug/kg	C UJ	410.000	ug/kg	C UJ	410.000	ug/kg	C UJ
N-Nitroso-di-n-propylamine	460.000	ug/kg	C UJ	410.000	ug/kg	C UJ	410.000	ug/kg	C UJ
N-Nitrosodiphenylamine	460.000	ug/kg	C UJ	410.000	ug/kg	C UJ	410.000	ug/kg	C UJ
Naphthalene	460.000	ug/kg	C UJ	410.000	ug/kg	C UJ	410.000	ug/kg	C UJ
Nitrobenzene	460.000	ug/kg	C UJ	410.000	ug/kg	C UJ	410.000	ug/kg	C UJ
Pentachlorophenol	1100.000	ug/kg	C UJ	1000.000	ug/kg	C UJ	980.000	ug/kg	C UJ
Phenanthrene	150.000	ug/kg	C J	90.000	ug/kg	C J	470.000	ug/kg	C J
Phenol	460.000	ug/kg	C UJ	410.000	ug/kg	C UJ	410.000	ug/kg	C U

TABLE C-3A
(Continued)

PHASE II - CHEMICAL PARAMETERS

BORING NUMBER	SWL-SS-04				SWL-SS-05				SWL-SS-06			
SAMPLE NUMBER	111300				111301				111303			
	0-0.5				0-0.5				0-0.5			
SAMPLING DATE	04/01/93				04/01/93				04/01/93			
CHEMICAL PARAMETERS	RESULTS	UNITS	L	VQ	RESULTS	UNITS	L	VQ	RESULTS	UNITS	L	VQ
Semivolatile Organics												
Pyrene	300.000	ug/kg	C	J	130.000	ug/kg	C	J	660.000	ug/kg	C	J
bis(2-Chloroethoxy)methane	460.000	ug/kg	C	UJ	410.000	ug/kg	C	UJ	410.000	ug/kg	C	UJ
bis(2-Chloroethyl)ether	460.000	ug/kg	C	UJ	410.000	ug/kg	C	UJ	410.000	ug/kg	C	UJ
bis(2-Chloroisopropyl) ether	460.000	ug/kg	C	UJ	410.000	ug/kg	C	UJ	410.000	ug/kg	C	UJ
bis(2-Ethylhexyl) phthalate	460.000	ug/kg	C	UJ	48.000	ug/kg	C	J	43.000	ug/kg	C	J
p-Chloroaniline	460.000	ug/kg	C	UJ	410.000	ug/kg	C	UJ	410.000	ug/kg	C	UJ
Pesticide Organics/PCBs												
4,4'-DDD	4.700	ug/kg	C	UJ	4.100	ug/kg	C	UJ	4.100	ug/kg	C	UJ
4,4'-DDE	4.700	ug/kg	C	U	4.100	ug/kg	C	U	12.000	ug/kg	C	J
4,4'-DDT	4.700	ug/kg	C	U	4.100	ug/kg	C	U	4.100	ug/kg	C	U
Aldrin	2.400	ug/kg	C	U	2.100	ug/kg	C	U	2.100	ug/kg	C	U
Aroclor-1016	47.000	ug/kg	C	U	41.000	ug/kg	C	U	41.000	ug/kg	C	U
Aroclor-1221	95.000	ug/kg	C	U	83.000	ug/kg	C	U	82.000	ug/kg	C	U
Aroclor-1232	47.000	ug/kg	C	U	41.000	ug/kg	C	U	41.000	ug/kg	C	U
Aroclor-1242	47.000	ug/kg	C	U	41.000	ug/kg	C	U	41.000	ug/kg	C	U
Aroclor-1248	47.000	ug/kg	C	U	41.000	ug/kg	C	U	41.000	ug/kg	C	U
Aroclor-1254	47.000	ug/kg	C	U	41.000	ug/kg	C	U	41.000	ug/kg	C	U
Aroclor-1260	47.000	ug/kg	C	U	41.000	ug/kg	C	U	41.000	ug/kg	C	U
Dieldrin	4.700	ug/kg	C	U	4.100	ug/kg	C	U	4.100	ug/kg	C	U
Endosulfan II	4.700	ug/kg	C	U	4.100	ug/kg	C	U	4.100	ug/kg	C	U
Endosulfan sulfate	4.700	ug/kg	C	U	4.100	ug/kg	C	U	4.100	ug/kg	C	U
Endosulfan-I	2.400	ug/kg	C	U	2.100	ug/kg	C	U	2.100	ug/kg	C	U
Endrin	4.700	ug/kg	C	U	4.100	ug/kg	C	U	4.100	ug/kg	C	U
Endrin aldehyde	4.700	ug/kg	C	U	4.100	ug/kg	C	U	4.100	ug/kg	C	U
Endrin ketone	4.700	ug/kg	C	U	4.100	ug/kg	C	U	4.100	ug/kg	C	U
Heptachlor	2.400	ug/kg	C	U	2.100	ug/kg	C	U	2.100	ug/kg	C	U
Heptachlor epoxide	2.400	ug/kg	C	U	2.100	ug/kg	C	U	2.100	ug/kg	C	U
Methoxychlor	24.000	ug/kg	C	U	21.000	ug/kg	C	U	21.000	ug/kg	C	U
Toxaphene	240.000	ug/kg	C	U	210.000	ug/kg	C	U	210.000	ug/kg	C	U
alpha-BHC	2.400	ug/kg	C	U	2.100	ug/kg	C	U	2.100	ug/kg	C	U
alpha-Chlordane	2.400	ug/kg	C	U	2.100	ug/kg	C	U	2.100	ug/kg	C	U
beta-BHC	2.400	ug/kg	C	U	2.100	ug/kg	C	U	2.100	ug/kg	C	U
delta-BHC	2.400	ug/kg	C	U	2.100	ug/kg	C	U	2.100	ug/kg	C	U
gamma-BHC (Lindane)	2.400	ug/kg	C	U	2.100	ug/kg	C	U	2.100	ug/kg	C	U
gamma-Chlordane	2.400	ug/kg	C	U	2.100	ug/kg	C	U	2.100	ug/kg	C	U

000091

TABLE C-3A
(Continued)

PHASE II - CHEMICAL PARAMETERS

BORING NUMBER	SWL-SS-07			SWL-SS-09			SWL-SS-10		
SAMPLE NUMBER	111304			111307			111309		
	0-0.5			0-0.5			0-0.5		
SAMPLING DATE	04/02/93			04/02/93			04/02/93		
CHEMICAL PARAMETERS	RESULTS	UNITS	L VQ	RESULTS	UNITS	L VQ	RESULTS	UNITS	L VQ
Inorganics									
Aluminum	6610.000	mg/kg	C J	15900.000	mg/kg	C J	18400.000	mg/kg	C J
Antimony	1.100	mg/kg	C UJ	1.200	mg/kg	C UJ	1.100	mg/kg	C UJ
Arsenic	5.400	mg/kg	C -	7.000	mg/kg	C -	5.000	mg/kg	C -
Barium	44.600	mg/kg	C -	101.000	mg/kg	C -	96.700	mg/kg	C -
Beryllium	0.510	mg/kg	C -	0.850	mg/kg	C -	0.970	mg/kg	C -
Cadmium	1.100	mg/kg	C U	1.200	mg/kg	C U	1.100	mg/kg	C U
Calcium	77000.000	mg/kg	C J	21600.000	mg/kg	C J	6970.000	mg/kg	C J
Chromium	8.200	mg/kg	C -	18.900	mg/kg	C -	19.900	mg/kg	C -
Cobalt	2.800	mg/kg	C -	7.400	mg/kg	C -	9.000	mg/kg	C -
Copper	8.600	mg/kg	C -	18.700	mg/kg	C -	18.600	mg/kg	C -
Cyanide	0.110	mg/kg	C U	0.130	mg/kg	C U	0.120	mg/kg	C U
Iron	10600.000	mg/kg	C J	23200.000	mg/kg	C J	23900.000	mg/kg	C J
Lead	5.200	mg/kg	C -	33.300	mg/kg	C -	5.500	mg/kg	C -
Magnesium	20800.000	mg/kg	C -	7120.000	mg/kg	C -	4330.000	mg/kg	C -
Manganese	349.000	mg/kg	C J	644.000	mg/kg	C J	510.000	mg/kg	C J
Mercury	0.110	mg/kg	C U	0.130	mg/kg	C U	0.120	mg/kg	C U
Molybdenum	4.600	mg/kg	C UJ	6.400	mg/kg	C J	6.400	mg/kg	C J
Nickel	7.700	mg/kg	C -	17.400	mg/kg	C -	18.100	mg/kg	C -
Potassium	945.000	mg/kg	C -	1750.000	mg/kg	C -	1800.000	mg/kg	C -
Selenium	0.370	mg/kg	C U	0.530	mg/kg	C U	0.420	mg/kg	C U
Silicon	722.000	mg/kg	C J	961.000	mg/kg	C J	996.000	mg/kg	C J
Silver	3.100	mg/kg	C -	7.100	mg/kg	C -	7.400	mg/kg	C -
Sodium	113.000	mg/kg	C -	86.300	mg/kg	C -	67.900	mg/kg	C -
Thallium	0.370	mg/kg	C U	0.530	mg/kg	C U	0.420	mg/kg	C U
Vanadium	17.700	mg/kg	C -	42.600	mg/kg	C -	46.000	mg/kg	C -
Zinc	28.800	mg/kg	C J	56.800	mg/kg	C J	52.600	mg/kg	C J
Volatile Organics									
1,1,1-Trichloroethane	11.000	ug/kg	C U	14.000	ug/kg	C U	12.000	ug/kg	C U
1,1,2,2-Tetrachloroethane	11.000	ug/kg	C U	14.000	ug/kg	C U	12.000	ug/kg	C U
1,1,2-Trichloroethane	11.000	ug/kg	C U	14.000	ug/kg	C U	12.000	ug/kg	C U
1,1-Dichloroethane	11.000	ug/kg	C U	14.000	ug/kg	C U	12.000	ug/kg	C U
1,1-Dichloroethene	11.000	ug/kg	C U	14.000	ug/kg	C U	12.000	ug/kg	C U
1,2-Dichloroethane	11.000	ug/kg	C U	14.000	ug/kg	C U	12.000	ug/kg	C U
1,2-Dichloroethene	11.000	ug/kg	C U	14.000	ug/kg	C U	12.000	ug/kg	C U
1,2-Dichloropropane	11.000	ug/kg	C U	14.000	ug/kg	C U	12.000	ug/kg	C U
2-Butanone	11.000	ug/kg	C UJ	14.000	ug/kg	C UJ	12.000	ug/kg	C UJ
2-Hexanone	11.000	ug/kg	C UJ	14.000	ug/kg	C UJ	12.000	ug/kg	C UJ
4-Methyl-2-pentanone	11.000	ug/kg	C UJ	14.000	ug/kg	C UJ	12.000	ug/kg	C UJ
Acetone	11.000	ug/kg	C UJ	14.000	ug/kg	C UJ	3.000	ug/kg	C J
Benzene	11.000	ug/kg	C U	14.000	ug/kg	C U	12.000	ug/kg	C U

TABLE C-3A
(Continued)

PHASE II - CHEMICAL PARAMETERS

BORING NUMBER	SWL-SS-07			SWL-SS-09			SWL-SS-10		
SAMPLE NUMBER	111304			111307			111309		
	0-0.5			0-0.5			0-0.5		
SAMPLING DATE	04/02/93			04/02/93			04/02/93		
CHEMICAL PARAMETERS	RESULTS	UNITS	L VQ	RESULTS	UNITS	L VQ	RESULTS	UNITS	L VQ
Volatile Organics									
Bromodichloromethane	11.000	ug/kg	C U	14.000	ug/kg	C U	12.000	ug/kg	C U
Bromoform	11.000	ug/kg	C U	14.000	ug/kg	C U	12.000	ug/kg	C U
Bromomethane	11.000	ug/kg	C U	14.000	ug/kg	C U	12.000	ug/kg	C U
Carbon Tetrachloride	11.000	ug/kg	C U	14.000	ug/kg	C U	12.000	ug/kg	C U
Carbon disulfide	11.000	ug/kg	C U	14.000	ug/kg	C U	12.000	ug/kg	C U
Chlorobenzene	11.000	ug/kg	C U	14.000	ug/kg	C U	12.000	ug/kg	C U
Chloroethane	11.000	ug/kg	C U	14.000	ug/kg	C U	12.000	ug/kg	C U
Chloroform	11.000	ug/kg	C U	14.000	ug/kg	C U	12.000	ug/kg	C U
Chloromethane	11.000	ug/kg	C U	14.000	ug/kg	C U	12.000	ug/kg	C U
Dibromochloromethane	11.000	ug/kg	C U	14.000	ug/kg	C U	12.000	ug/kg	C U
Ethylbenzene	11.000	ug/kg	C U	14.000	ug/kg	C U	12.000	ug/kg	C U
Methylene chloride	11.000	ug/kg	C U	14.000	ug/kg	C U	12.000	ug/kg	C U
Styrene	11.000	ug/kg	C U	14.000	ug/kg	C U	12.000	ug/kg	C U
Tetrachloroethene	11.000	ug/kg	C U	14.000	ug/kg	C U	12.000	ug/kg	C U
Toluene	11.000	ug/kg	C U	14.000	ug/kg	C U	12.000	ug/kg	C U
Trichloroethene	11.000	ug/kg	C U	14.000	ug/kg	C U	12.000	ug/kg	C U
Vinyl Acetate	11.000	ug/kg	C U	14.000	ug/kg	C U	12.000	ug/kg	C U
Vinyl chloride	11.000	ug/kg	C UJ	14.000	ug/kg	C UJ	12.000	ug/kg	C UJ
Xylenes, Total	11.000	ug/kg	C U	14.000	ug/kg	C U	12.000	ug/kg	C U
cis-1,3-Dichloropropene	11.000	ug/kg	C U	14.000	ug/kg	C U	12.000	ug/kg	C U
trans-1,3-Dichloropropene	11.000	ug/kg	C U	14.000	ug/kg	C U	12.000	ug/kg	C U
Semivolatile Organics									
1,2,4-Trichlorobenzene	390.000	ug/kg	C UJ	460.000	ug/kg	C UJ	420.000	ug/kg	C UJ
1,2-Dichlorobenzene	390.000	ug/kg	C UJ	460.000	ug/kg	C UJ	420.000	ug/kg	C UJ
1,3-Dichlorobenzene	390.000	ug/kg	C UJ	460.000	ug/kg	C UJ	420.000	ug/kg	C UJ
1,4-Dichlorobenzene	390.000	ug/kg	C UJ	460.000	ug/kg	C UJ	420.000	ug/kg	C UJ
2,4,5-Trichlorophenol	950.000	ug/kg	C UJ	1100.000	ug/kg	C UJ	1000.000	ug/kg	C UJ
2,4,6-Trichlorophenol	390.000	ug/kg	C UJ	460.000	ug/kg	C UJ	420.000	ug/kg	C UJ
2,4-Dichlorophenol	390.000	ug/kg	C UJ	460.000	ug/kg	C UJ	420.000	ug/kg	C UJ
2,4-Dimethylphenol	390.000	ug/kg	C UJ	460.000	ug/kg	C UJ	420.000	ug/kg	C UJ
2,4-Dinitrophenol	950.000	ug/kg	C UJ	1100.000	ug/kg	C UJ	1000.000	ug/kg	C UJ
2,4-Dinitrotoluene	390.000	ug/kg	C UJ	460.000	ug/kg	C UJ	420.000	ug/kg	C UJ
2,6-Dinitrotoluene	390.000	ug/kg	C UJ	460.000	ug/kg	C UJ	420.000	ug/kg	C UJ
2-Chloronaphthalene	390.000	ug/kg	C UJ	460.000	ug/kg	C UJ	420.000	ug/kg	C UJ
2-Chlorophenol	390.000	ug/kg	C UJ	460.000	ug/kg	C UJ	420.000	ug/kg	C UJ
2-Methylnaphthalene	390.000	ug/kg	C UJ	460.000	ug/kg	C UJ	420.000	ug/kg	C UJ
2-Methylphenol	390.000	ug/kg	C UJ	460.000	ug/kg	C UJ	420.000	ug/kg	C UJ
2-Nitroaniline	950.000	ug/kg	C UJ	1100.000	ug/kg	C UJ	1000.000	ug/kg	C UJ
2-Nitrophenol	390.000	ug/kg	C UJ	460.000	ug/kg	C UJ	420.000	ug/kg	C UJ
3,3'-Dichlorobenzidine	390.000	ug/kg	C UJ	460.000	ug/kg	C UJ	420.000	ug/kg	C UJ

000093

TABLE C-3A
(Continued)

PHASE II - CHEMICAL PARAMETERS

BORING NUMBER	SWL-SS-07			SWL-SS-09			SWL-SS-10		
SAMPLE NUMBER	111304			111307			111309		
	0-0.5			0-0.5			0-0.5		
SAMPLING DATE	04/02/93			04/02/93			04/02/93		
CHEMICAL PARAMETERS	RESULTS	UNITS	L VQ	RESULTS	UNITS	L VQ	RESULTS	UNITS	L VQ
Semivolatile Organics									
3-Nitroaniline	950.000	ug/kg	C UJ	1100.000	ug/kg	C UJ	1000.000	ug/kg	C UJ
4,6-Dinitro-2-methylphenol	950.000	ug/kg	C UJ	1100.000	ug/kg	C UJ	1000.000	ug/kg	C UJ
4-Bromophenyl phenyl ether	390.000	ug/kg	C UJ	460.000	ug/kg	C UJ	420.000	ug/kg	C UJ
4-Chloro-3-methylphenol	390.000	ug/kg	C UJ	460.000	ug/kg	C UJ	420.000	ug/kg	C UJ
4-Chlorophenylphenyl ether	390.000	ug/kg	C UJ	460.000	ug/kg	C UJ	420.000	ug/kg	C UJ
4-Methylphenol	390.000	ug/kg	C UJ	460.000	ug/kg	C UJ	420.000	ug/kg	C UJ
4-Nitroaniline	950.000	ug/kg	C UJ	1100.000	ug/kg	C UJ	1000.000	ug/kg	C UJ
4-Nitrophenol	950.000	ug/kg	C UJ	1100.000	ug/kg	C UJ	1000.000	ug/kg	C UJ
Acenaphthene	390.000	ug/kg	C UJ	460.000	ug/kg	C UJ	420.000	ug/kg	C UJ
Acenaphthylene	390.000	ug/kg	C UJ	460.000	ug/kg	C UJ	420.000	ug/kg	C UJ
Anthracene	390.000	ug/kg	C UJ	460.000	ug/kg	C UJ	420.000	ug/kg	C UJ
Benzo(a)anthracene	390.000	ug/kg	C UJ	460.000	ug/kg	C UJ	420.000	ug/kg	C UJ
Benzo(a)pyrene	390.000	ug/kg	C UJ	460.000	ug/kg	C UJ	420.000	ug/kg	C UJ
Benzo(b)fluoranthene	390.000	ug/kg	C UJ	460.000	ug/kg	C UJ	420.000	ug/kg	C UJ
Benzo(g,h,i)perylene	390.000	ug/kg	C UJ	460.000	ug/kg	C UJ	420.000	ug/kg	C UJ
Benzo(k)fluoranthene	42.000	ug/kg	C J	460.000	ug/kg	C UJ	420.000	ug/kg	C UJ
Benzoic acid	1900.000	ug/kg	C UJ	2200.000	ug/kg	C UJ	2000.000	ug/kg	C UJ
Benzyl alcohol	390.000	ug/kg	C UJ	460.000	ug/kg	C UJ	420.000	ug/kg	C UJ
Butyl benzyl phthalate	390.000	ug/kg	C UJ	460.000	ug/kg	C UJ	420.000	ug/kg	C UJ
Carbazole	390.000	ug/kg	C UJ	460.000	ug/kg	C UJ	420.000	ug/kg	C UJ
Chrysene	49.000	ug/kg	C J	460.000	ug/kg	C UJ	420.000	ug/kg	C UJ
Di-n-butyl phthalate	390.000	ug/kg	C UJ	460.000	ug/kg	C UJ	420.000	ug/kg	C UJ
Di-n-octyl phthalate	390.000	ug/kg	C UJ	460.000	ug/kg	C UJ	420.000	ug/kg	C UJ
Dibenzo(a,h)anthracene	390.000	ug/kg	C UJ	460.000	ug/kg	C UJ	420.000	ug/kg	C UJ
Dibenzofuran	390.000	ug/kg	C UJ	460.000	ug/kg	C UJ	420.000	ug/kg	C UJ
Diethyl phthalate	390.000	ug/kg	C UJ	460.000	ug/kg	C UJ	420.000	ug/kg	C UJ
Dimethyl phthalate	390.000	ug/kg	C UJ	460.000	ug/kg	C UJ	420.000	ug/kg	C UJ
Fluoranthene	85.000	ug/kg	C J	460.000	ug/kg	C UJ	420.000	ug/kg	C UJ
Fluorene	390.000	ug/kg	C UJ	460.000	ug/kg	C UJ	420.000	ug/kg	C UJ
Hexachlorobenzene	390.000	ug/kg	C UJ	460.000	ug/kg	C UJ	420.000	ug/kg	C UJ
Hexachlorobutadiene	390.000	ug/kg	C UJ	460.000	ug/kg	C UJ	420.000	ug/kg	C UJ
Hexachlorocyclopentadiene	390.000	ug/kg	C UJ	460.000	ug/kg	C UJ	420.000	ug/kg	C UJ
Hexachloroethane	390.000	ug/kg	C UJ	460.000	ug/kg	C UJ	420.000	ug/kg	C UJ
Indeno(1,2,3-cd)pyrene	390.000	ug/kg	C UJ	460.000	ug/kg	C UJ	420.000	ug/kg	C UJ
Isophorone	390.000	ug/kg	C UJ	460.000	ug/kg	C UJ	420.000	ug/kg	C UJ
N-Nitroso-di-n-propylamine	390.000	ug/kg	C UJ	460.000	ug/kg	C UJ	420.000	ug/kg	C UJ
N-Nitrosodiphenylamine	390.000	ug/kg	C UJ	460.000	ug/kg	C UJ	420.000	ug/kg	C UJ
Naphthalene	390.000	ug/kg	C UJ	460.000	ug/kg	C UJ	420.000	ug/kg	C UJ
Nitrobenzene	390.000	ug/kg	C UJ	460.000	ug/kg	C UJ	420.000	ug/kg	C UJ
Pentachlorophenol	950.000	ug/kg	C UJ	1100.000	ug/kg	C UJ	1000.000	ug/kg	C UJ
Phenanthrene	59.000	ug/kg	C J	460.000	ug/kg	C UJ	420.000	ug/kg	C UJ
Phenol	390.000	ug/kg	C UJ	460.000	ug/kg	C UJ	420.000	ug/kg	C UJ

TABLE C-3A
(Continued)

PHASE II - CHEMICAL PARAMETERS

BORING NUMBER	SWL-SS-07			SWL-SS-09			SWL-SS-10		
SAMPLE NUMBER	111304			111307			111309		
	0-0.5			0-0.5			0-0.5		
SAMPLING DATE	04/02/93			04/02/93			04/02/93		
CHEMICAL PARAMETERS	RESULTS	UNITS	L VQ	RESULTS	UNITS	L VQ	RESULTS	UNITS	L VQ
Semivolatile Organics									
Pyrene	130.000	ug/kg	C J	49.000	ug/kg	C J	420.000	ug/kg	C UJ
bis(2-Chloroethoxy)methane	390.000	ug/kg	C UJ	460.000	ug/kg	C UJ	420.000	ug/kg	C UJ
bis(2-Chloroethyl)ether	390.000	ug/kg	C UJ	460.000	ug/kg	C UJ	420.000	ug/kg	C UJ
bis(2-Chloroisopropyl) ether	390.000	ug/kg	C UJ	460.000	ug/kg	C UJ	420.000	ug/kg	C UJ
bis(2-Ethylhexyl) phthalate	40.000	ug/kg	C J	460.000	ug/kg	C UJ	420.000	ug/kg	C UJ
p-Chloroaniline	390.000	ug/kg	C UJ	460.000	ug/kg	C UJ	420.000	ug/kg	C UJ
Pesticide Organics/PCBs									
4,4'-DDD	3.900	ug/kg	C UJ	4.500	ug/kg	C UJ	4.300	ug/kg	C UJ
4,4'-DDE	3.900	ug/kg	C U	4.500	ug/kg	C U	4.300	ug/kg	C U
4,4'-DDT	3.900	ug/kg	C U	4.500	ug/kg	C U	4.300	ug/kg	C U
Aldrin	2.000	ug/kg	C U	2.300	ug/kg	C U	2.200	ug/kg	C U
Aroclor-1016	39.000	ug/kg	C U	45.000	ug/kg	C U	43.000	ug/kg	C U
Aroclor-1221	79.000	ug/kg	C U	92.000	ug/kg	C U	86.000	ug/kg	C U
Aroclor-1232	39.000	ug/kg	C U	45.000	ug/kg	C U	43.000	ug/kg	C U
Aroclor-1242	39.000	ug/kg	C U	45.000	ug/kg	C U	43.000	ug/kg	C U
Aroclor-1248	39.000	ug/kg	C U	45.000	ug/kg	C U	43.000	ug/kg	C U
Aroclor-1254	39.000	ug/kg	C U	45.000	ug/kg	C U	43.000	ug/kg	C U
Aroclor-1260	39.000	ug/kg	C U	45.000	ug/kg	C U	43.000	ug/kg	C U
Dieldrin	3.900	ug/kg	C U	4.500	ug/kg	C U	4.300	ug/kg	C U
Endosulfan II	3.900	ug/kg	C U	4.500	ug/kg	C U	4.300	ug/kg	C U
Endosulfan sulfate	3.900	ug/kg	C U	4.500	ug/kg	C U	4.300	ug/kg	C U
Endosulfan-I	2.000	ug/kg	C U	2.300	ug/kg	C U	2.200	ug/kg	C U
Endrin	3.900	ug/kg	C U	4.500	ug/kg	C U	4.300	ug/kg	C U
Endrin aldehyde	3.900	ug/kg	C U	4.500	ug/kg	C U	4.300	ug/kg	C U
Endrin ketone	3.900	ug/kg	C U	4.500	ug/kg	C U	4.300	ug/kg	C U
Heptachlor	2.000	ug/kg	C U	2.300	ug/kg	C U	2.200	ug/kg	C U
Heptachlor epoxide	2.000	ug/kg	C U	2.300	ug/kg	C U	2.200	ug/kg	C U
Methoxychlor	20.000	ug/kg	C U	23.000	ug/kg	C U	22.000	ug/kg	C U
Toxaphene	200.000	ug/kg	C U	230.000	ug/kg	C U	220.000	ug/kg	C U
alpha-BHC	2.000	ug/kg	C U	2.300	ug/kg	C U	2.200	ug/kg	C U
alpha-Chlordane	2.000	ug/kg	C U	2.300	ug/kg	C U	2.200	ug/kg	C U
beta-BHC	2.000	ug/kg	C U	2.300	ug/kg	C U	2.200	ug/kg	C U
delta-BHC	2.000	ug/kg	C U	2.300	ug/kg	C U	2.200	ug/kg	C U
gamma-BHC (Lindane)	2.000	ug/kg	C U	2.300	ug/kg	C U	2.200	ug/kg	C U
gamma-Chlordane	2.000	ug/kg	C U	2.300	ug/kg	C U	2.200	ug/kg	C U

TABLE C-3A
(Continued)

PHASE II - CHEMICAL PARAMETERS

BORING NUMBER	SWL-SS-11			SWL-SS-12			SWL-SS-08		
SAMPLE NUMBER	111310			111312			111492		
	0-0.5			0-0.5			0-0.5		
SAMPLING DATE	04/02/93			04/02/93			04/19/93		
CHEMICAL PARAMETERS	RESULTS	UNITS	L VQ	RESULTS	UNITS	L VQ	RESULTS	UNITS	L VQ
Inorganics									
Aluminum	8030.000	mg/kg	C J	9870.000	mg/kg	C J	10000.000	mg/kg	C -
Antimony	1.000	mg/kg	C UJ	0.850	mg/kg	C UJ	0.890	mg/kg	C UJ
Arsenic	5.500	mg/kg	C -	4.400	mg/kg	C -	6.300	mg/kg	C J
Barium	60.700	mg/kg	C -	80.900	mg/kg	C -	98.700	mg/kg	C -
Beryllium	0.460	mg/kg	C -	0.630	mg/kg	C -	0.460	mg/kg	C -
Cadmium	1.000	mg/kg	C U	0.850	mg/kg	C -	0.890	mg/kg	C U
Calcium	81200.000	mg/kg	C J	25500.000	mg/kg	C J	79400.000	mg/kg	C -
Chromium	10.500	mg/kg	C -	11.400	mg/kg	C -	12.200	mg/kg	C -
Cobalt	4.000	mg/kg	C -	8.500	mg/kg	C -	6.600	mg/kg	C -
Copper	15.400	mg/kg	C -	15.400	mg/kg	C -	32.200	mg/kg	C -
Cyanide	0.120	mg/kg	C U	0.120	mg/kg	C U	0.120	mg/kg	C U
Iron	15400.000	mg/kg	C J	16600.000	mg/kg	C J	16800.000	mg/kg	C -
Lead	3.200	mg/kg	C -	5.100	mg/kg	C -	11.900	mg/kg	C -
Magnesium	29800.000	mg/kg	C -	8280.000	mg/kg	C -	21100.000	mg/kg	C -
Manganese	366.000	mg/kg	C J	705.000	mg/kg	C J	533.000	mg/kg	C -
Mercury	0.110	mg/kg	C U	0.110	mg/kg	C U	0.120	mg/kg	C U
Molybdenum	4.600	mg/kg	C J	5.000	mg/kg	C J	4.900	mg/kg	C -
Nickel	12.200	mg/kg	C -	15.600	mg/kg	C -	15.400	mg/kg	C -
Potassium	924.000	mg/kg	C -	944.000	mg/kg	C -	1100.000	mg/kg	C -
Selenium	0.340	mg/kg	C UJ	0.420	mg/kg	C J	0.470	mg/kg	C U
Silicon	592.000	mg/kg	C J	604.000	mg/kg	C J	573.000	mg/kg	C -
Silver	4.400	mg/kg	C -	4.900	mg/kg	C -	4.300	mg/kg	C -
Sodium	137.000	mg/kg	C -	65.600	mg/kg	C -	143.000	mg/kg	C -
Thallium	0.340	mg/kg	C U	0.400	mg/kg	C U	0.470	mg/kg	C U
Vanadium	21.500	mg/kg	C -	27.500	mg/kg	C -	24.800	mg/kg	C -
Zinc	35.400	mg/kg	C J	40.300	mg/kg	C J	80.500	mg/kg	C -
Volatile Organics									
1,1,1-Trichloroethane	12.000	ug/kg	C U	12.000	ug/kg	C U	12.000	ug/kg	C U
1,1,2,2-Tetrachloroethane	12.000	ug/kg	C U	12.000	ug/kg	C U	12.000	ug/kg	C U
1,1,2-Trichloroethane	12.000	ug/kg	C U	12.000	ug/kg	C U	12.000	ug/kg	C U
1,1-Dichloroethane	12.000	ug/kg	C U	12.000	ug/kg	C U	12.000	ug/kg	C U
1,1-Dichloroethene	12.000	ug/kg	C U	12.000	ug/kg	C U	12.000	ug/kg	C U
1,2-Dichloroethane	12.000	ug/kg	C U	12.000	ug/kg	C U	12.000	ug/kg	C U
1,2-Dichloroethene	12.000	ug/kg	C U	12.000	ug/kg	C U	12.000	ug/kg	C U
1,2-Dichloropropane	12.000	ug/kg	C U	12.000	ug/kg	C U	12.000	ug/kg	C U
2-Butanone	12.000	ug/kg	C UJ	12.000	ug/kg	C UJ	12.000	ug/kg	C UJ
2-Hexanone	12.000	ug/kg	C UJ	12.000	ug/kg	C UJ	12.000	ug/kg	C UJ
4-Methyl-2-pentanone	12.000	ug/kg	C UJ	12.000	ug/kg	C UJ	12.000	ug/kg	C UJ
Acetone	5.000	ug/kg	C J	12.000	ug/kg	C UJ	12.000	ug/kg	C U
Benzene	12.000	ug/kg	C U	12.000	ug/kg	C U	12.000	ug/kg	C U

TABLE C-3A
(Continued)

PHASE II - CHEMICAL PARAMETERS

BORING NUMBER	SWL-SS-11				SWL-SS-12				SWL-SS-08			
SAMPLE NUMBER	111310				111312				111492			
	0-0.5				0-0.5				0-0.5			
SAMPLING DATE	04/02/93				04/02/93				04/19/93			
CHEMICAL PARAMETERS	RESULTS	UNITS	L	VQ	RESULTS	UNITS	L	VQ	RESULTS	UNITS	L	VQ
Volatile Organics												
Bromodichloromethane	12.000	ug/kg	C	U	12.000	ug/kg	C	U	12.000	ug/kg	C	U
Bromoform	12.000	ug/kg	C	U	12.000	ug/kg	C	U	12.000	ug/kg	C	U
Bromomethane	12.000	ug/kg	C	U	12.000	ug/kg	C	U	12.000	ug/kg	C	UJ
Carbon Tetrachloride	12.000	ug/kg	C	U	12.000	ug/kg	C	U	12.000	ug/kg	C	U
Carbon disulfide	12.000	ug/kg	C	U	12.000	ug/kg	C	U	12.000	ug/kg	C	UJ
Chlorobenzene	12.000	ug/kg	C	U	12.000	ug/kg	C	U	12.000	ug/kg	C	U
Chloroethane	12.000	ug/kg	C	U	12.000	ug/kg	C	U	12.000	ug/kg	C	UJ
Chloroform	12.000	ug/kg	C	U	12.000	ug/kg	C	U	12.000	ug/kg	C	U
Chloromethane	12.000	ug/kg	C	U	12.000	ug/kg	C	U	12.000	ug/kg	C	UJ
Dibromochloromethane	12.000	ug/kg	C	U	12.000	ug/kg	C	U	12.000	ug/kg	C	U
Ethylbenzene	12.000	ug/kg	C	U	12.000	ug/kg	C	U	12.000	ug/kg	C	U
Methylene chloride	12.000	ug/kg	C	U	12.000	ug/kg	C	U	12.000	ug/kg	C	U
Styrene	12.000	ug/kg	C	U	12.000	ug/kg	C	U	12.000	ug/kg	C	U
Tetrachloroethene	12.000	ug/kg	C	U	12.000	ug/kg	C	U	12.000	ug/kg	C	U
Toluene	12.000	ug/kg	C	U	12.000	ug/kg	C	U	12.000	ug/kg	C	U
Trichloroethene	12.000	ug/kg	C	U	12.000	ug/kg	C	U	12.000	ug/kg	C	U
Vinyl Acetate	12.000	ug/kg	C	U	12.000	ug/kg	C	U	12.000	ug/kg	C	UJ
Vinyl chloride	12.000	ug/kg	C	UJ	12.000	ug/kg	C	UJ	12.000	ug/kg	C	U
Xylenes, Total	12.000	ug/kg	C	U	12.000	ug/kg	C	U	12.000	ug/kg	C	U
cis-1,3-Dichloropropene	12.000	ug/kg	C	U	12.000	ug/kg	C	U	12.000	ug/kg	C	U
trans-1,3-Dichloropropene	12.000	ug/kg	C	U	12.000	ug/kg	C	U	12.000	ug/kg	C	U
Semivolatile Organics												
1,2,4-Trichlorobenzene	400.000	ug/kg	C	UJ	410.000	ug/kg	C	UJ	400.000	ug/kg	C	U
1,2-Dichlorobenzene	400.000	ug/kg	C	UJ	410.000	ug/kg	C	UJ	400.000	ug/kg	C	U
1,3-Dichlorobenzene	400.000	ug/kg	C	UJ	410.000	ug/kg	C	UJ	400.000	ug/kg	C	U
1,4-Dichlorobenzene	400.000	ug/kg	C	UJ	410.000	ug/kg	C	UJ	400.000	ug/kg	C	U
2,4,5-Trichlorophenol	970.000	ug/kg	C	UJ	1000.000	ug/kg	C	UJ	980.000	ug/kg	C	U
2,4,6-Trichlorophenol	400.000	ug/kg	C	UJ	410.000	ug/kg	C	UJ	400.000	ug/kg	C	U
2,4-Dichlorophenol	400.000	ug/kg	C	UJ	410.000	ug/kg	C	UJ	400.000	ug/kg	C	U
2,4-Dimethylphenol	400.000	ug/kg	C	UJ	410.000	ug/kg	C	UJ	400.000	ug/kg	C	U
2,4-Dinitrophenol	970.000	ug/kg	C	UJ	1000.000	ug/kg	C	UJ	2000.000	ug/kg	C	UJ
2,4-Dinitrotoluene	400.000	ug/kg	C	UJ	410.000	ug/kg	C	UJ	400.000	ug/kg	C	U
2,6-Dinitrotoluene	400.000	ug/kg	C	UJ	410.000	ug/kg	C	UJ	400.000	ug/kg	C	U
2-Chloronaphthalene	400.000	ug/kg	C	UJ	410.000	ug/kg	C	UJ	400.000	ug/kg	C	U
2-Chlorophenol	400.000	ug/kg	C	UJ	410.000	ug/kg	C	UJ	400.000	ug/kg	C	U
2-Methylnaphthalene	400.000	ug/kg	C	UJ	410.000	ug/kg	C	UJ	400.000	ug/kg	C	U
2-Methylphenol	400.000	ug/kg	C	UJ	410.000	ug/kg	C	UJ	400.000	ug/kg	C	U
2-Nitroaniline	970.000	ug/kg	C	UJ	1000.000	ug/kg	C	UJ	980.000	ug/kg	C	U
2-Nitrophenol	400.000	ug/kg	C	UJ	410.000	ug/kg	C	UJ	400.000	ug/kg	C	U
3,3'-Dichlorobenzidine	400.000	ug/kg	C	UJ	410.000	ug/kg	C	UJ	400.000	ug/kg	C	U

000037

TABLE C-3A
(Continued)

PHASE II - CHEMICAL PARAMETERS

BORING NUMBER	SWL-SS-11				SWL-SS-12				SWL-SS-08			
SAMPLE NUMBER	111310				111312				111492			
	0-0.5				0-0.5				0-0.5			
SAMPLING DATE	04/02/93				04/02/93				04/19/93			
CHEMICAL PARAMETERS	RESULTS	UNITS	L	VQ	RESULTS	UNITS	L	VQ	RESULTS	UNITS	L	VQ
Semivolatile Organics												
3-Nitroaniline	970.000	ug/kg	C	UJ	1000.000	ug/kg	C	UJ	980.000	ug/kg	C	U
4,6-Dinitro-2-methylphenol	970.000	ug/kg	C	UJ	1000.000	ug/kg	C	UJ	980.000	ug/kg	C	U
4-Bromophenyl phenyl ether	400.000	ug/kg	C	UJ	410.000	ug/kg	C	UJ	400.000	ug/kg	C	U
4-Chloro-3-methylphenol	400.000	ug/kg	C	UJ	410.000	ug/kg	C	UJ	400.000	ug/kg	C	U
4-Chlorophenylphenyl ether	400.000	ug/kg	C	UJ	410.000	ug/kg	C	UJ	400.000	ug/kg	C	U
4-Methylphenol	400.000	ug/kg	C	UJ	410.000	ug/kg	C	UJ	400.000	ug/kg	C	U
4-Nitroaniline	970.000	ug/kg	C	UJ	1000.000	ug/kg	C	UJ	980.000	ug/kg	C	U
4-Nitrophenol	970.000	ug/kg	C	UJ	1000.000	ug/kg	C	UJ	980.000	ug/kg	C	UJ
Acenaphthene	400.000	ug/kg	C	UJ	410.000	ug/kg	C	UJ	400.000	ug/kg	C	U
Acenaphthylene	400.000	ug/kg	C	UJ	410.000	ug/kg	C	UJ	400.000	ug/kg	C	U
Anthracene	400.000	ug/kg	C	UJ	410.000	ug/kg	C	UJ	400.000	ug/kg	C	U
Benzo(a)anthracene	400.000	ug/kg	C	UJ	410.000	ug/kg	C	UJ	79.000	ug/kg	C	J
Benzo(a)pyrene	400.000	ug/kg	C	UJ	410.000	ug/kg	C	UJ	67.000	ug/kg	C	J
Benzo(b)fluoranthene	400.000	ug/kg	C	UJ	410.000	ug/kg	C	UJ	64.000	ug/kg	C	J
Benzo(g,h,i)perylene	400.000	ug/kg	C	UJ	410.000	ug/kg	C	UJ	400.000	ug/kg	C	U
Benzo(k)fluoranthene	400.000	ug/kg	C	UJ	410.000	ug/kg	C	UJ	75.000	ug/kg	C	J
Benzoic acid	1900.000	ug/kg	C	UJ	2000.000	ug/kg	C	UJ	2000.000	ug/kg	C	UJ
Benzyl alcohol	400.000	ug/kg	C	UJ	410.000	ug/kg	C	UJ	400.000	ug/kg	C	U
Butyl benzyl phthalate	400.000	ug/kg	C	UJ	410.000	ug/kg	C	UJ	400.000	ug/kg	C	U
Carbazole	400.000	ug/kg	C	UJ	410.000	ug/kg	C	UJ	400.000	ug/kg	C	U
Chrysene	400.000	ug/kg	C	UJ	410.000	ug/kg	C	UJ	94.000	ug/kg	C	J
Di-n-butyl phthalate	400.000	ug/kg	C	UJ	410.000	ug/kg	C	UJ	400.000	ug/kg	C	U
Di-n-octyl phthalate	400.000	ug/kg	C	UJ	410.000	ug/kg	C	UJ	400.000	ug/kg	C	UJ
Dibenzo(a,h)anthracene	400.000	ug/kg	C	UJ	410.000	ug/kg	C	UJ	400.000	ug/kg	C	U
Dibenzofuran	400.000	ug/kg	C	UJ	410.000	ug/kg	C	UJ	400.000	ug/kg	C	U
Diethyl phthalate	400.000	ug/kg	C	UJ	410.000	ug/kg	C	UJ	400.000	ug/kg	C	U
Dimethyl phthalate	400.000	ug/kg	C	UJ	410.000	ug/kg	C	UJ	400.000	ug/kg	C	U
Fluoranthene	400.000	ug/kg	C	UJ	410.000	ug/kg	C	UJ	200.000	ug/kg	C	J
Fluorene	400.000	ug/kg	C	UJ	410.000	ug/kg	C	UJ	400.000	ug/kg	C	U
Hexachlorobenzene	400.000	ug/kg	C	UJ	410.000	ug/kg	C	UJ	400.000	ug/kg	C	U
Hexachlorobutadiene	400.000	ug/kg	C	UJ	410.000	ug/kg	C	UJ	400.000	ug/kg	C	U
Hexachlorocyclopentadiene	400.000	ug/kg	C	UJ	410.000	ug/kg	C	UJ	400.000	ug/kg	C	UJ
Hexachloroethane	400.000	ug/kg	C	UJ	410.000	ug/kg	C	UJ	400.000	ug/kg	C	U
Indeno(1,2,3-cd)pyrene	400.000	ug/kg	C	UJ	410.000	ug/kg	C	UJ	46.000	ug/kg	C	J
Isophorone	400.000	ug/kg	C	UJ	410.000	ug/kg	C	UJ	400.000	ug/kg	C	U
N-Nitroso-di-n-propylamine	400.000	ug/kg	C	UJ	410.000	ug/kg	C	UJ	400.000	ug/kg	C	U
N-Nitrosodiphenylamine	400.000	ug/kg	C	UJ	410.000	ug/kg	C	UJ	400.000	ug/kg	C	U
Naphthalene	400.000	ug/kg	C	UJ	410.000	ug/kg	C	UJ	400.000	ug/kg	C	U
Nitrobenzene	400.000	ug/kg	C	UJ	410.000	ug/kg	C	UJ	400.000	ug/kg	C	U
Pentachlorophenol	970.000	ug/kg	C	UJ	1000.000	ug/kg	C	UJ	980.000	ug/kg	C	U
Phenanthrene	400.000	ug/kg	C	UJ	410.000	ug/kg	C	UJ	120.000	ug/kg	C	J
Phenol	400.000	ug/kg	C	UJ	410.000	ug/kg	C	UJ	400.000	ug/kg	C	U

TABLE C-3A
(Continued)

PHASE II - CHEMICAL PARAMETERS

BORING NUMBER	SWL-SS-11				SWL-SS-12				SWL-SS-08			
SAMPLE NUMBER	111310				111312				111492			
	0-0.5				0-0.5				0-0.5			
SAMPLING DATE	04/02/93				04/02/93				04/19/93			
CHEMICAL PARAMETERS	RESULTS	UNITS	L	VQ	RESULTS	UNITS	L	VQ	RESULTS	UNITS	L	VQ
Semivolatile Organics												
Pyrene	400.000	ug/kg	C	UJ	410.000	ug/kg	C	UJ	170.000	ug/kg	C	J
bis(2-Chloroethoxy)methane	400.000	ug/kg	C	UJ	410.000	ug/kg	C	UJ	400.000	ug/kg	C	U
bis(2-Chloroethyl)ether	400.000	ug/kg	C	UJ	410.000	ug/kg	C	UJ	400.000	ug/kg	C	U
bis(2-Chloroisopropyl) ether	400.000	ug/kg	C	UJ	410.000	ug/kg	C	UJ	400.000	ug/kg	C	UJ
bis(2-Ethylhexyl) phthalate	43.000	ug/kg	C	J	410.000	ug/kg	C	UJ	400.000	ug/kg	C	U
p-Chloroaniline	400.000	ug/kg	C	UJ	410.000	ug/kg	C	UJ	400.000	ug/kg	C	U
Pesticide Organics/PCBs												
4,4'-DDD	4.000	ug/kg	C	UJ	4.100	ug/kg	C	UJ	4.100	ug/kg	C	U
4,4'-DDE	4.000	ug/kg	C	U	4.100	ug/kg	C	U	4.100	ug/kg	C	U
4,4'-DDT	4.000	ug/kg	C	U	4.100	ug/kg	C	U	4.100	ug/kg	C	U
Aldrin	2.100	ug/kg	C	U	2.100	ug/kg	C	U	2.100	ug/kg	C	U
Aroclor-1016	40.000	ug/kg	C	U	41.000	ug/kg	C	U	41.000	ug/kg	C	U
Aroclor-1221	82.000	ug/kg	C	U	83.000	ug/kg	C	U	83.000	ug/kg	C	U
Aroclor-1232	40.000	ug/kg	C	U	41.000	ug/kg	C	U	41.000	ug/kg	C	U
Aroclor-1242	40.000	ug/kg	C	U	41.000	ug/kg	C	U	41.000	ug/kg	C	U
Aroclor-1248	40.000	ug/kg	C	U	41.000	ug/kg	C	U	41.000	ug/kg	C	U
Aroclor-1254	40.000	ug/kg	C	U	41.000	ug/kg	C	U	41.000	ug/kg	C	U
Aroclor-1260	40.000	ug/kg	C	U	41.000	ug/kg	C	U	41.000	ug/kg	C	U
Dieldrin	4.000	ug/kg	C	U	4.100	ug/kg	C	U	4.100	ug/kg	C	U
Endosulfan II	4.000	ug/kg	C	U	4.100	ug/kg	C	U	4.100	ug/kg	C	U
Endosulfan sulfate	4.000	ug/kg	C	U	4.100	ug/kg	C	U	4.100	ug/kg	C	U
Endosulfan-I	2.100	ug/kg	C	U	2.100	ug/kg	C	U	2.100	ug/kg	C	U
Endrin	4.000	ug/kg	C	U	4.100	ug/kg	C	U	4.100	ug/kg	C	U
Endrin aldehyde	4.000	ug/kg	C	U	4.100	ug/kg	C	U	4.100	ug/kg	C	U
Endrin ketone	4.000	ug/kg	C	U	4.100	ug/kg	C	U	4.100	ug/kg	C	U
Heptachlor	2.100	ug/kg	C	U	2.100	ug/kg	C	U	2.100	ug/kg	C	U
Heptachlor epoxide	2.100	ug/kg	C	U	2.100	ug/kg	C	U	2.100	ug/kg	C	U
Methoxychlor	21.000	ug/kg	C	U	21.000	ug/kg	C	U	21.000	ug/kg	C	U
Toxaphene	210.000	ug/kg	C	U	210.000	ug/kg	C	U	210.000	ug/kg	C	U
alpha-BHC	2.100	ug/kg	C	U	2.100	ug/kg	C	U	2.100	ug/kg	C	U
alpha-Chlordane	2.100	ug/kg	C	U	2.100	ug/kg	C	U	2.100	ug/kg	C	U
beta-BHC	2.100	ug/kg	C	U	2.100	ug/kg	C	U	2.100	ug/kg	C	U
delta-BHC	2.100	ug/kg	C	U	2.100	ug/kg	C	U	2.100	ug/kg	C	U
gamma-BHC (Lindane)	2.100	ug/kg	C	U	2.100	ug/kg	C	U	2.100	ug/kg	C	U
gamma-Chlordane	2.100	ug/kg	C	U	2.100	ug/kg	C	U	2.100	ug/kg	C	U

TABLE C-3B
SOLID WASTE LANDFILL
TENTATIVELY IDENTIFIED COMPOUNDS
SURFACE SOIL

Sample Number	Sample Location	Parameter	Result	Units
111309	SWL-SS-10	2-propanol	18	ug/kg
111293	SWL-SS-01	2-cyclohexen-1-one	97	ug/kg
111298	SWL-SS-03	2-cyclohexen-1-one	88	ug/kg
111301	SWL-SS-05	limone	170	ug/kg
111309	SWL-SS-10	limone	490	ug/kg
111492	SWL-SS-08	octane, 2-methyl	260	ug/kg
111492	SWL-SS-08	octane,3-methyl	210	ug/kg
111492	SWL-SS-08	2-hexanone, 6-(acetyloxy)	1900	ug/kg
111492	SWL-SS-08	3-hexen-2-one, 5-methyl-	690	ug/kg
111492	SWL-SS-08	2h-pyran-2,3-diol, tetrahydr	2700	ug/kg
111492	SWL-SS-08	1-hepten-1-ol,acetate	200	ug/kg
111492	SWL-SS-08	9,12,15-octadecatrueb-1-ol	130	ug/kg
111492	SWL-SS-08	hexanedioic acid, dioctyl es	9600	ug/kg
111492	SWL-SS-08	octadecane, 9-ethyl-9-heptyl	93	ug/kg

TABLE C-4

TABLE C-4

SOLID WASTE LANDFILL
CIS SURFACE SOIL RADIOLOGICAL RESULTS
OPERABLE UNIT 2 REMEDIAL INVESTIGATION
FERNALD ENVIRONMENTAL MANAGEMENT PROJECT

FEMP ID #		SL46238		
Depth		6-12"		
Date		03/09/87		
	Isotope	Activity (pCi/g)	Uncertainty	Validation Qualifier
	Cesium-137	0.31	NA	U
	Lead-210		NA	
	Neptunium-237	0.34	NA	U
	Plutonium-239/240	0.09	NA	U
	Plutonium-238	0.09	NA	U
	Radium-226			
	Radium-228			
	Ruthenium-106	2.38	NA	U
	Strontium-90	0.30	NA	U
	Technetium-99	0.9	NA	U
	Thorium-228	1.29	±0.29	J
	Thorium-232	1.05	±0.25	J
	Thorium-230	8.91	±0.70	J
	Uranium-238	330	±4.59	
	Uranium-234	183	±3.42	
	Uranium-235	16.7	±1.03	

[a]Laboratory qualifier, data validation could not be performed

[b]Not Applicable

[c] < = Less than

FER\CRU2RI\ILG\TABC-4\January 5, 1995 5:21pm

TABLE C-5

TABLE C-5

SOLID WASTE LANDFILL
SURFACE MEDIA ENVIRONMENTAL SURVEY
OPERABLE UNIT 2 REMEDIAL INVESTIGATION
FERNALD ENVIRONMENTAL MANAGEMENT PROJECT

Analyte (units)	FE0620SS	FE0621SS	FE0622SS	FE0623SS
Asbestos	ND	ND	ND	ND
RADIONUCLIDES (pCi/g)				
Bismuth-214	0.88±0.4	2.2±0.1	0.83±0.09	0.69±0.03
Cesium-137	I	I	I	I
Radium-226	0.87±0.04	2.1±0.1(G)	0.83±0.07(G)	0.6±.03(G)
Thorium-228	1.0±0.1(G)	1.6±0.1(G)	1.3±0.1(G)	0.71±0.05(G)
Thorium-232	1.1±0.1(G)	1.2±0.1(G)	1.1±0.2(G)	0.8±0.7(G)
Uranium-235	0.89±0.01	N	1.2±0.1	0.69±0.04
Uranium-238	64±4	N	48±6	I
Total Uranium (mg/kg)	149.0	66.0	112.0	11.0
TCLP METALS (mg/L)				
Lead	<0.3	<0.3	<0.3	<0.3
Selenium	<0.5	<0.5	<0.5	<0.5
VOLATILE ORGANIC COMPOUNDS (μg/kg)				
1,1-Dichloroethane	<5.0	<5.0	<5.0	NA
1,1,1-Tricloroethane	6.0	5.0	<5.0	NA
1,1,2-Trichloroethane	<5.0	<5.0	<5.0	NA
1,1,2,2-Tetrachloroethane	<5.0	<5.0	<5.0	NA
1,2-Dichloroethane	<5.0	<5.0	<5.0	NA
1,2-Dichloropropane	<5.0	<5.0	<5.0	NA
2-Butanone	<10.0	<10.0	<10.0	NA
2-Chloroethylvinyl Ether	<10.0	<10.0	<10.0	NA
2-Hexanone	<10.0	<10.0	<10.0	NA
4-Methyl-2-pentanone	<10.0	<10.0	<10.0	NA
Acetone	21.0(B)	12.0(B)	27.0(B)	NA
Benzene	<5.0	<5.0	<5.0	NA
Bromodichloromethane	<5.0	<5.0	<5.0	NA
Bromoform	<5.0	<5.0	<5.0	NA
Bromomethane	<10.0	<10.0	<10.0	NA
Carbon tetrachloride	<5.0	<5.0	<5.0	NA
Carbon disulfide	<5.0	<5.0	<5.0	NA
Chlorobenzene	<5.0	<5.0	<5.0	NA
Chloroethane	<10.0	<10.0	<10.0	NA
Chloroform	9.0	13.0	12.0	NA
Chloromethane	<10.0	<10.0	<10.0	NA
Cis-1,3-dichloropropene	<5.0	<5.0	<5.0	NA
Dibromiochloromethane	<5.0	<5.0	<5.0	NA
Ethyl benzene	<5.0	<5.0	<5.0	NA

See notes at end of table

TABLE C-5
(Continued)

Analyte (units)	FE0620SS	FE0621SS	FE0622SS	FE0623SS
	Volatile Organic Compounds (μg/kg) (Continued)			
Methylene chloride	16.0(B)	10.0(B)	8.0(B)	NA
Styrene	<5.0	<5.0	<5.0	NA
Tetrachloroethene	<5.0	<5.0	<5.0	NA
Toluene	3.0(BJ)	4.0(BJ)	4.0(BJ)	NA
Total Xylenes	<5.0	<5.0	<5.0	NA
Trans-1,2-Dichloroethene	<5.0	<5.0	<5.0	NA
Trans-1,3-Dichloropropene	<5.0	<5.0	<5.0	NA
Trichloroethene	<5.0	<5.0	<5.0	NA
Vinyl Chloride	<10.0	<10.0	<10.0	NA
Vinyl Acetate	<10.0	<10.0	<10.0	NA
	PCBs (mg/kg)			
Aroclor-1242	<0.3	<0.3	<0.3	<0.3
Aroclor-1248	<0.4	<0.4	<0.4	<0.4
Aroclor-1254	<0.2	<0.2	<0.2	<0.2
Aroclor-1260	<0.3	<0.3	<0.3	<0.3

NA = Not Analyzed

N = Nuclide not identified by GAMANAL analysis as being present in the sample; no value reported.

I = Nuclide identified by GAMANAL analysis of sample spectrum, but values did not exceed room background at the 95% confidence level; no value reported.

B = Analyte was found in the blank as well as the sample.

J = Estimated value of compound present but less than the specified detection limit.

G = Gamma Spectroscopy Analysis.

TABLE C-6

TABLE C-6A

SOLID WASTE LANDFILL
RI/FS SUBSURFACE SOIL RESULTS
OPERABLE UNIT 2 REMEDIAL INVESTIGATION
FERNALD ENVIRONMENTAL MANAGEMENT PROJECT

PHASE I - RADIOLOGICAL PARAMETERS

BORING NUMBER	1035			1718			1718		
SAMPLE NUMBER	008388			067266			067275		
	21 - 22.5			1.5 - 3			9 - 10.5		
SAMPLING DATE	03/21/88			07/31/91			08/01/91		
RADIOLOGICAL PARAMETERS	RESULTS	UNITS	VQ	RESULTS	UNITS	VQ	RESULTS	UNITS	VQ
CS-137	0.200	pci/g	UJ	0.200	pci/g	UJ	0.200	pci/g	UJ
NP-237	0.600	pci/g	U	0.600	pci/g	UJ	0.600	pci/g	UJ
PU-238	0.600	pci/g	U	0.600	pci/g	UJ	0.600	pci/g	UJ
PU-239/240	0.600	pci/g	U	0.600	pci/g	U	0.600	pci/g	U
RA-226	0.800	pci/g	J	1.410	pci/g	J	1.150	pci/g	J
RA-228	0.600	pci/g	J	3.150	pci/g	J	1.130	pci/g	J
RU-106	1.000	pci/g	UJ	1.000	pci/g	UJ	1.000	pci/g	UJ
SR-90	0.500	pci/g	U	0.720	pci/g	R	0.850	pci/g	R
TC-99	0.900	pci/g	U	0.900	pci/g	U	0.900	pci/g	U
TH-228	0.800	pci/g	J	3.390	pci/g	J	2.290	pci/g	J
TH-230	1.100	pci/g	J	2.300	pci/g	J	1.740	pci/g	J
TH-232	0.700	pci/g	J	2.220	pci/g	-	1.250	pci/g	-
TH-TOTAL	NA			20.000	mg/kg	-	11.300	mg/kg	-
U-234	5.200	pci/g	-	23.300	pci/g	J	8.700	pci/g	J
U-235/236	0.600	pci/g	U	1.650	pci/g	J	1.130	pci/g	J
U-238	18.100	pci/g	-	22.100	pci/g	-	40.800	pci/g	-
U-TOTAL	NA			67.200	mg/kg	J	124.000	mg/kg	J

000104

6508

TABLE C-6A
(Continued)

PHASE I - RADIOLOGICAL PARAMETERS

BORING NUMBER	1718			1719			1719		
SAMPLE NUMBER	067279			067286			067292		
	15 - 16.5			1.5 - 3			10.5 - 12		
SAMPLING DATE	08/01/91			08/07/91			08/07/91		
RADIOLOGICAL PARAMETERS	RESULTS	UNITS	VQ	RESULTS	UNITS	VQ	RESULTS	UNITS	VQ
CS-137	0.200	pci/g	UJ	0.200	pci/g	UJ	0.200	pci/g	UJ
NP-237	0.600	pci/g	UJ	0.600	pci/g	U	1.000	pci/g	UJ
PU-238	0.600	pci/g	UJ	0.600	pci/g	U	1.000	pci/g	U
PU-239/240	0.600	pci/g	U	0.600	pci/g	U	1.000	pci/g	U
RA-226	1.030	pci/g	J	1.240	pci/g	J	1.000	pci/g	J
RA-228	0.780	pci/g	J	1.100	pci/g	J	1.000	pci/g	J
RU-106	1.000	pci/g	UJ	1.000	pci/g	UJ	1.000	pci/g	UJ
SR-90	0.500	pci/g	R	0.860	pci/g	J	1.100	pci/g	J
TC-99	0.900	pci/g	U	0.900	pci/g	U	0.900	pci/g	U
TH-228	0.960	pci/g	J	1.240	pci/g	-	NA		
TH-230	0.690	pci/g	J	1.880	pci/g	-	NA		
TH-232	0.600	pci/g	U	0.640	pci/g	-	NA		
TH-TOTAL	3.960	mg/kg	-	5.790	mg/kg	-	NA		
U-234	0.890	pci/g	J	5.530	pci/g	-	20.500	pci/g	-
U-235/236	0.600	pci/g	UJ	1.230	pci/g	-	4.500	pci/g	-
U-238	1.110	pci/g	-	8.660	pci/g	-	141.000	pci/g	-
U-TOTAL	3.050	mg/kg	J	10.600	mg/kg	J	393.000	mg/kg	J

000405

TABLE C-6A
(Continued)

PHASE I - RADIOLOGICAL PARAMETERS

BORING NUMBER	1719			1720			1720		
SAMPLE NUMBER	067296			067306			067310		
	16.5 - 18			1.5 - 3			7.5 - 9		
SAMPLING DATE	08/08/91			08/10/91			08/10/91		
RADIOLOGICAL PARAMETERS	RESULTS	UNITS	VQ	RESULTS	UNITS	VQ	RESULTS	UNITS	VQ
CS-137	0.200	pci/g	UJ	0.200	pci/g	UJ	0.200	pci/g	UJ
NP-237	0.600	pci/g	U	0.600	pci/g	U	0.600	pci/g	U
PU-238	0.600	pci/g	U	0.600	pci/g	UJ	0.600	pci/g	UJ
PU-239/240	0.600	pci/g	U	0.600	pci/g	UJ	0.600	pci/g	UJ
RA-226	0.380	pci/g	J	1.060	pci/g	J	1.010	pci/g	J
RA-228	0.500	pci/g	UJ	1.350	pci/g	J	1.070	pci/g	J
RU-106	1.000	pci/g	UJ	1.000	pci/g	UJ	1.000	pci/g	UJ
SR-90	1.160	pci/g	J	1.580	pci/g	J	3.090	pci/g	J
TC-99	0.900	pci/g	U	0.900	pci/g	U	0.900	pci/g	U
TH-228	1.120	pci/g	-	2.100	pci/g	J	1.170	pci/g	J
TH-230	1.150	pci/g	-	3.460	pci/g	J	2.510	pci/g	J
TH-232	0.740	pci/g	-	1.400	pci/g	R	0.740	pci/g	R
TH-TOTAL	6.660	mg/kg	-	12.700	mg/kg	R	6.660	mg/kg	R
U-234	0.910	pci/g	-	18.500	pci/g	J	1.350	pci/g	J
U-235/236	0.600	pci/g	U	1.270	pci/g	J	0.600	pci/g	UJ
U-238	1.590	pci/g	-	45.200	pci/g	-	3.540	pci/g	-
U-TOTAL	19.700	mg/kg	J	150.000	mg/kg	J	13.000	mg/kg	J

TABLE C-6A
(Continued)

PHASE I - RADIOLOGICAL PARAMETERS

BORING NUMBER	1720			1721			1721		
SAMPLE NUMBER	067313			067230			067233		
	9 - 10.5			3 - 4.5			7.5 - 9		
SAMPLING DATE	08/10/91			07/26/91			07/26/91		
RADIOLOGICAL PARAMETERS	RESULTS	UNITS	VQ	RESULTS	UNITS	VQ	RESULTS	UNITS	VQ
CS-137	0.200	pci/g	UJ	0.200	pci/g	U	0.200	pci/g	U
GROSS ALPHA	NA			NA			25.200	pci/g	NV
GROSS BETA	NA			NA			24.800	pci/g	NV
NP-237	0.600	pci/g	U	0.600	pci/g	UJ	0.600	pci/g	UJ
PB-210	NA			NA			0.740	pci/g	-
PU-238	0.600	pci/g	UJ	0.600	pci/g	UJ	0.600	pci/g	U
PU-239/240	0.600	pci/g	UJ	0.600	pci/g	U	0.600	pci/g	U
RA-224	NA			NA			1.240	pci/g	-
RA-226	1.550	pci/g	J	0.890	pci/g	J	0.880	pci/g	-
RA-228	1.480	pci/g	J	0.670	pci/g	J	1.040	pci/g	-
RU-106	1.000	pci/g	UJ	1.000	pci/g	U	1.100	pci/g	D
SR-90	0.900	pci/g	J	0.800	pci/g	J	0.900	pci/g	UJ
TC-99	0.900	pci/g	U	0.900	pci/g	U	0.900	pci/g	U
TH-228	2.020	pci/g	J	1.570	pci/g	J	1.020	pci/g	J
TH-230	1.890	pci/g	J	1.370	pci/g	J	0.600	pci/g	UJ
TH-232	1.060	pci/g	R	0.711	pci/g	-	0.940	pci/g	J
TH-TOTAL	9.570	mg/kg	R	6.420	mg/kg	-	8.510	mg/kg	J
U-234	1.240	pci/g	J	1.390	pci/g	J	1.640	pci/g	-
U-235	NA			NA			0.300	pci/g	U
U-235/236	0.600	pci/g	UJ	0.600	pci/g	UJ	0.600	pci/g	U
U-238	1.810	pci/g	-	2.330	pci/g	-	3.000	pci/g	-
U-TOTAL	5.830	mg/kg	J	6.700	mg/kg	-	8.900	mg/kg	J

000287

TABLE C-6A
(Continued)

PHASE I - RADIOLOGICAL PARAMETERS

BORING NUMBER	1721			1722			1722		
SAMPLE NUMBER	067238			067251			067257		
	15 - 16.5			3 - 4.5			11 - 12.5		
SAMPLING DATE	07/28/91			07/29/91			07/30/91		
RADIOLOGICAL PARAMETERS	RESULTS	UNITS	VQ	RESULTS	UNITS	VQ	RESULTS	UNITS	VQ
CS-137	0.200	pci/g	U	0.200	pci/g	UJ	0.200	pci/g	U
GROSS ALPHA	NA			NA			23.100	pci/g	NV
GROSS BETA	NA			NA			29.400	pci/g	NV
NP-237	0.600	pci/g	UJ	NA			0.600	pci/g	UJ
PB-210	NA			NA			0.680	pci/g	-
PU-238	0.600	pci/g	UJ	NA			0.600	pci/g	U
PU-239/240	0.600	pci/g	U	NA			0.600	pci/g	U
RA-224	NA			NA			1.490	pci/g	-
RA-226	0.980	pci/g	J	1.500	pci/g	J	1.010	pci/g	-
RA-228	0.680	pci/g	J	1.030	pci/g	J	1.320	pci/g	-
RU-106	1.000	pci/g	U	1.000	pci/g	UJ	1.000	pci/g	D
SR-90	0.730	pci/g	J	0.500	pci/g	UJ	1.420	pci/g	-
TC-99	0.900	pci/g	U	NA			0.900	pci/g	U
TH-228	1.400	pci/g	J	1.610	pci/g	J	1.090	pci/g	J
TH-230	1.740	pci/g	J	12.300	pci/g	J	2.400	pci/g	J
TH-232	0.931	pci/g	-	1.000	pci/g	U	1.200	pci/g	J
TH-TOTAL	8.400	mg/kg	-	8.990	mg/kg	-	10.800	mg/kg	J
U-234	1.760	pci/g	J	334.000	pci/g	J	4.510	pci/g	-
U-235	NA			NA			0.400	pci/g	U
U-235/236	0.126	pci/g	J	22.400	pci/g	J	0.600	pci/g	U
U-238	3.610	pci/g	-	420.000	pci/g	-	6.530	pci/g	-
U-TOTAL	11.200	mg/kg	-	940.000	mg/kg	J	17.500	mg/kg	J

TABLE C-6A
(Continued)

PHASE I - RADIOLOGICAL PARAMETERS

BORING NUMBER	1722			1808			1808		
SAMPLE NUMBER	067258			067393			067398		
	12.5 - 14			1.5 - 3			10.5 - 12		
SAMPLING DATE	07/30/91			08/27/91			08/27/91		
RADIOLOGICAL PARAMETERS	RESULTS	UNITS	VQ	RESULTS	UNITS	VQ	RESULTS	UNITS	VQ
CS-137	0.200	pci/g	U	0.200	pci/g	R	0.200	pci/g	UJ
GROSS ALPHA	76.600	pci/g	NV	NA			NA		
GROSS BETA	83.800	pci/g	NV	NA			NA		
NP-237	0.600	pci/g	UJ	0.600	pci/g	UJ	0.600	pci/g	UJ
PB-210	0.400	pci/g	U	NA			NA		
PU-238	0.600	pci/g	U	0.600	pci/g	UJ	0.600	pci/g	UJ
PU-239/240	0.600	pci/g	U	0.600	pci/g	U	0.600	pci/g	U
RA-224	1.110	pci/g	-	NA			NA		
RA-226	0.870	pci/g	-	1.030	pci/g	R	1.050	pci/g	J
RA-228	0.980	pci/g	-	3.560	pci/g	R	1.160	pci/g	J
RU-106	1.200	pci/g	D	1.000	pci/g	R	1.000	pci/g	UJ
SR-90	0.900	pci/g	D	0.500	pci/g	UJ	0.500	pci/g	UJ
TC-99	0.900	pci/g	U	0.900	pci/g	U	0.900	pci/g	U
TH-228	0.960	pci/g	-	4.010	pci/g	J	1.170	pci/g	J
TH-230	3.810	pci/g	-	2.760	pci/g	J	2.420	pci/g	J
TH-232	0.850	pci/g	-	3.590	pci/g	-	1.120	pci/g	-
TH-TOTAL	2.650	mg/kg	-	32.400	mg/kg	-	10.100	mg/kg	-
U-234	30.600	pci/g	-	17.600	pci/g	J	6.260	pci/g	J
U-235	1.890	pci/g	J	NA			NA		
U-235/236	2.470	pci/g	-	1.170	pci/g	J	0.606	pci/g	J
U-238	47.700	pci/g	-	17.300	pci/g	-	21.000	pci/g	-
U-TOTAL	146.000	mg/kg	-	49.900	mg/kg	R	66.800	mg/kg	J

000109

TABLE C-6A
(Continued)

PHASE I - RADIOLOGICAL PARAMETERS

BORING NUMBER	1808			1888			3037		
SAMPLE NUMBER	067400			067718			007968		
	13.5 - 15			6 - 7.5			22.5 - 24		
SAMPLING DATE	08/27/91			02/23/92			01/20/88		
RADIOLOGICAL PARAMETERS	RESULTS	UNITS	VQ	RESULTS	UNITS	VQ	RESULTS	UNITS	VQ
CS-137	0.200	pci/g	UJ	0.200	pci/g	UJ	0.200	pci/g	UJ
GROSS ALPHA	NA			31.700	pci/g	NV	NA		
GROSS BETA	NA			27.200	pci/g	NV	NA		
NP-237	0.600	pci/g	UJ	NA			0.600	pci/g	UJ
PB-210	NA			1.030	pci/g	J	NA		
PU-238	0.600	pci/g	UJ	0.600	pci/g	U	0.600	pci/g	U
PU-239/240	0.600	pci/g	U	0.600	pci/g	U	0.600	pci/g	U
RA-224	NA			2.140	pci/g	J	NA		
RA-226	0.680	pci/g	J	1.120	pci/g	J	0.600	pci/g	J
RA-228	0.600	pci/g	J	1.570	pci/g	J	0.600	pci/g	J
RU-106	1.000	pci/g	UJ	1.300	pci/g	D	1.000	pci/g	UJ
SR-90	0.500	pci/g	UJ	1.010	pci/g	-	0.500	pci/g	U
TC-99	0.900	pci/g	U	0.900	pci/g	UJ	2.500	pci/g	R
TH-228	1.170	pci/g	J	1.370	pci/g	-	1.200	pci/g	-
TH-230	1.920	pci/g	J	2.300	pci/g	-	1.300	pci/g	-
TH-232	0.600	pci/g	U	1.580	pci/g	-	0.600	pci/g	U
TH-TOTAL	5.080	mg/kg	-	14.300	mg/kg	-	NA		
U-234	0.924	pci/g	J	4.100	pci/g	-	0.600	pci/g	UJ
U-235	NA			0.270	pci/g	J	NA		
U-235/236	0.600	pci/g	UJ	0.600	pci/g	U	0.600	pci/g	UJ
U-238	1.080	pci/g	-	5.300	pci/g	-	0.900	pci/g	J
U-TOTAL	3.210	mg/kg	J	19.000	mg/kg	J	NA		

TABLE C-6A
(Continued)

PHASE I - RADIOLOGICAL PARAMETERS

BORING NUMBER	3037			3037		
SAMPLE NUMBER	008107			008117		
	45 - 46.5			95 - 96.5		
SAMPLING DATE	01/22/88			01/25/88		
RADIOLOGICAL PARAMETERS	RESULTS	UNITS	VQ	RESULTS	UNITS	VQ
CS-137	0.200	pci/g	UJ	0.200	pci/g	UJ
NP-237	0.600	pci/g	UJ	0.600	pci/g	UJ
PU-238	0.600	pci/g	U	0.600	pci/g	U
PU-239/240	0.600	pci/g	U	0.600	pci/g	U
RA-226	0.300	pci/g	U	0.300	pci/g	UJ
RA-228	0.600	pci/g	UJ	0.600	pci/g	UJ
RU-106	1.000	pci/g	U	1.000	pci/g	UJ
SR-90	0.500	pci/g	U	0.500	pci/g	U
TC-99	2.900	pci/g	R	2.500	pci/g	NV
TH-228	0.700	pci/g	-	0.600	pci/g	UJ
TH-230	0.600	pci/g	U	0.700	pci/g	J
TH-232	0.600	pci/g	U	0.600	pci/g	UJ
U-234	0.600	pci/g	UJ	0.600	pci/g	UJ
U-235/236	0.600	pci/g	UJ	0.600	pci/g	UJ
U-238	0.600	pci/g	UJ	0.600	pci/g	UJ

000111

TABLE C-6A
(Continued)

PHASE I - CHEMICAL PARAMETERS

BORING NUMBER	1718				1718				1718			
SAMPLE NUMBER	067267				067271				067278			
	3-4.5				7.5-9				13.5-15			
SAMPLING DATE	07/31/91				07/31/91				08/01/91			
CHEMICAL PARAMETERS	RESULTS	UNITS	L	VQ	RESULTS	UNITS	L	VQ	RESULTS	UNITS	L	VQ
Dioxin Furan												
1,2,3,4,6,7,8-Heptachlorodibenzo-p-dioxin	0.130	ug/kg	E	U	0.038	ug/kg	E	U	0.022	ug/kg	E	U
1,2,3,4,6,7,8-Heptachlorodibenzofuran	0.019	ug/kg	E	U	0.012	ug/kg	E	U	0.043	ug/kg	E	U
1,2,3,4,7,8,9-Heptachlorodibenzofuran	0.024	ug/kg	E	U	0.015	ug/kg	E	U	0.055	ug/kg	E	U
1,2,3,4,7,8-Hexachlorodibenzo-p-dioxin	0.018	ug/kg	E	U	0.180	ug/kg	E	U	0.300	ug/kg	E	U
1,2,3,4,7,8-Hexachlorodibenzofuran	0.029	ug/kg	E	U	0.023	ug/kg	E	U	0.032	ug/kg	E	U
1,2,3,6,7,8-Hexachlorodibenzo-p-dioxin	0.014	ug/kg	E	U	0.140	ug/kg	E	U	0.240	ug/kg	E	U
1,2,3,6,7,8-Hexachlorodibenzofuran	0.027	ug/kg	E	U	0.022	ug/kg	E	U	0.030	ug/kg	E	U
1,2,3,7,8,9-Hexachlorodibenzo-p-dioxin	0.015	ug/kg	E	U	0.150	ug/kg	E	U	0.250	ug/kg	E	U
1,2,3,7,8,9-Hexachlorodibenzofuran	0.034	ug/kg	E	U	0.027	ug/kg	E	U	0.037	ug/kg	E	U
1,2,3,7,8-Pentachlorodibenzo-p-dioxin	0.170	ug/kg	E	UJ	0.250	ug/kg	E	UJ	0.067	ug/kg	E	-
1,2,3,7,8-Pentachlorodibenzofuran	0.037	ug/kg	E	UJ	0.160	ug/kg	E	UJ	0.031	ug/kg	E	UJ
2,3,4,6,7,8-Hexachlorodibenzofuran	0.034	ug/kg	E	U	0.027	ug/kg	E	U	0.037	ug/kg	E	U
2,3,4,7,8-Pentachlorodibenzofuran	0.036	ug/kg	E	UJ	0.160	ug/kg	E	UJ	0.030	ug/kg	E	UJ
2,3,7,8-TCDD	0.210	ug/kg	E	U	0.190	ug/kg	E	U	0.130	ug/kg	E	U
2,3,7,8-TCDF	0.310	ug/kg	E	U	0.310	ug/kg	E	U	0.120	ug/kg	E	U
Heptachlorodibenzo-p-dioxin	0.130	ug/kg	E	U	0.038	ug/kg	E	U	0.022	ug/kg	E	U
Heptachlorodibenzofuran	0.021	ug/kg	E	U	0.013	ug/kg	E	U	0.048	ug/kg	E	U
Hexachlorodibenzo-p-dioxin	0.016	ug/kg	E	U	0.160	ug/kg	E	U	0.260	ug/kg	E	U
Hexachlorodibenzofuran	0.031	ug/kg	E	U	0.024	ug/kg	E	U	0.034	ug/kg	E	U
Octachlorodibenzo-p-dioxin	13.700	ug/kg	E	J	0.440	ug/kg	E	J	0.110	ug/kg	E	J
Octachlorodibenzofuran	0.100	ug/kg	E	UJ	0.170	ug/kg	E	UJ	0.020	ug/kg	E	UJ
Pentachlorodibenzo-p-dioxin	0.170	ug/kg	E	UJ	0.250	ug/kg	E	UJ	0.067	ug/kg	E	UJ
Pentachlorodibenzofuran	0.037	ug/kg	E	UJ	0.160	ug/kg	E	UJ	0.031	ug/kg	E	UJ
Tetrachlorodibenzo-p-dioxin	0.051	ug/kg	E	U	0.072	ug/kg	E	U	0.040	ug/kg	E	U
Tetrachlorodibenzofuran	0.068	ug/kg	E	U	0.059	ug/kg	E	U	0.025	ug/kg	E	U

TABLE C-6A
(Continued)

PHASE I - CHEMICAL PARAMETERS

BORING NUMBER	1719				1719				1719			
SAMPLE NUMBER	067287				067295				067300			
	3-4.5				15-16.5				18-19.5			
SAMPLING DATE	08/07/91				08/08/91				08/08/91			
CHEMICAL PARAMETERS	RESULTS	UNITS	L	VQ	RESULTS	UNITS	L	VQ	RESULTS	UNITS	L	VQ
Inorganics												
Aluminum	1920.000	mg/kg	D	-	2530.000	mg/kg	D	-	6090.000	mg/kg	D	-
Antimony	4.200	mg/kg	D	-	3.800	mg/kg	D	-	27.300	mg/kg	D	-
Arsenic	4.400	mg/kg	D	J	4.900	mg/kg	D	J	5.300	mg/kg	D	J
Barium	16.700	mg/kg	D	-	18.200	mg/kg	D	-	83.400	mg/kg	D	-
Beryllium	0.190	mg/kg	D	J	0.200	mg/kg	D	J	0.710	mg/kg	D	J
Boron	7.200	mg/kg	D	J	7.400	mg/kg	D	J	32.800	mg/kg	D	J
Cadmium	0.640	mg/kg	D	-	0.480	mg/kg	D	-	4.000	mg/kg	D	-
Calcium	18600.000	mg/kg	D	-	19200.000	mg/kg	D	-	106000.000	mg/kg	D	-
Chromium	6.300	mg/kg	D	J	7.500	mg/kg	D	J	26.900	mg/kg	D	J
Cobalt	2.400	mg/kg	D	-	2.900	mg/kg	D	-	15.300	mg/kg	D	-
Copper	4.200	mg/kg	D	J	4.800	mg/kg	D	J	18.900	mg/kg	D	J
Cyanide	0.110	mg/kg	D	U	0.130	mg/kg	D	U	0.110	mg/kg	D	U
Iron	3350.000	mg/kg	D	J	4490.000	mg/kg	D	J	16700.000	mg/kg	D	J
Lead	14.200	mg/kg	D	J	12.000	mg/kg	D	J	13.500	mg/kg	D	J
Magnesium	4240.000	mg/kg	D	-	3320.000	mg/kg	D	-	29700.000	mg/kg	D	-
Manganese	130.000	mg/kg	D	J	115.000	mg/kg	D	J	527.000	mg/kg	D	J
Mercury	0.100	mg/kg	D	U	0.130	mg/kg	D	U	0.110	mg/kg	D	U
Molybdenum	2.900	mg/kg	D	-	3.600	mg/kg	D	-	14.500	mg/kg	D	-
Nickel	4.400	mg/kg	D	-	4.900	mg/kg	D	-	27.500	mg/kg	D	-
Potassium	891.000	mg/kg	D	-	938.000	mg/kg	D	-	1220.000	mg/kg	D	-
Selenium	0.420	mg/kg	D	UJ	0.490	mg/kg	D	UJ	0.440	mg/kg	D	UJ
Silicon	234.000	mg/kg	D	-	132.000	mg/kg	D	-	512.000	mg/kg	D	-
Silver	3.300	mg/kg	D	-	3.400	mg/kg	D	-	15.500	mg/kg	D	-
Sodium	53.900	mg/kg	D	-	30.000	mg/kg	D	-	160.000	mg/kg	D	-
Thallium	0.420	mg/kg	D	UJ	0.490	mg/kg	D	U	2.200	mg/kg	D	UJ
Tin	NA				50.300	mg/kg	D	U	NA			
Vanadium	6.700	mg/kg	D	-	8.300	mg/kg	D	-	26.100	mg/kg	D	-
Zinc	10.300	mg/kg	D	-	50.700	mg/kg	D	-	43.800	mg/kg	D	-
Volatile Organics												
1,1,1,2-Tetrachloroethane	NA				6.310	ug/kg	D	U	NA			
1,1,1-Trichloroethane	6.000	ug/kg	D	UJ	6.000	ug/kg	D	UJ	5.000	ug/kg	D	UJ
1,1,2,2-Tetrachloroethane	6.000	ug/kg	D	U	6.000	ug/kg	D	U	5.000	ug/kg	D	U
1,1,2-Trichloroethane	6.000	ug/kg	D	U	6.000	ug/kg	D	U	5.000	ug/kg	D	U
1,1-Dichloroethane	6.000	ug/kg	D	U	6.000	ug/kg	D	U	5.000	ug/kg	D	U
1,1-Dichloroethene	6.000	ug/kg	D	U	6.000	ug/kg	D	U	5.000	ug/kg	D	U
1,2,3-Trichloropropane	NA				6.310	ug/kg	D	UJ	NA			
1,2-Dibromo-3-chloropropane	NA				12.600	ug/kg	D	UJ	NA			
1,2-Dibromoethane	NA				6.310	ug/kg	D	U	NA			
1,2-Dichloroethane	6.000	ug/kg	D	J	6.000	ug/kg	D	U	5.000	ug/kg	D	U
1,2-Dichloroethene	6.000	ug/kg	D	U	6.000	ug/kg	D	U	5.000	ug/kg	D	U

TABLE C-6A
(Continued)

PHASE I - CHEMICAL PARAMETERS

BORING NUMBER	1719				1719				1719			
SAMPLE NUMBER	067287				067295				067300			
	3-4.5				15-16.5				18-19.5			
SAMPLING DATE	08/07/91				08/08/91				08/08/91			
CHEMICAL PARAMETERS	RESULTS	UNITS	L	VQ	RESULTS	UNITS	L	VQ	RESULTS	UNITS	L	VQ
Volatile Organics												
1,2-Dichloropropane	6.000	ug/kg	D	U	6.000	ug/kg	D	U	5.000	ug/kg	D	U
1,4-Dioxane	NA				6310.000	ug/kg	D	R	NA			
2-Butanone	12.000	ug/kg	D	UJ	12.000	ug/kg	D	U	11.000	ug/kg	D	U
2-Chloro-1,3-butadiene	NA				6.310	ug/kg	D	U	NA			
2-Hexanone	12.000	ug/kg	D	UJ	1.000	ug/kg	D	J	11.000	ug/kg	D	UJ
3-Chloropropene	NA				6.310	ug/kg	D	U	NA			
4-Methyl-2-pentanone	12.000	ug/kg	D	UJ	1.000	ug/kg	D	J	11.000	ug/kg	D	UJ
Acetone	7.000	ug/kg	D	J	10.000	ug/kg	D	J	10.000	ug/kg	D	J
Acetonitrile	NA				1260.000	ug/kg	D	UJ	NA			
Acrolein	NA				12.600	ug/kg	D	UJ	NA			
Acrylonitrile	NA				12.600	ug/kg	D	UJ	NA			
Benzene	6.000	ug/kg	D	U	6.000	ug/kg	D	U	5.000	ug/kg	D	U
Bromodichloromethane	6.000	ug/kg	D	U	6.000	ug/kg	D	U	5.000	ug/kg	D	U
Bromoform	6.000	ug/kg	D	U	6.000	ug/kg	D	U	5.000	ug/kg	D	U
Bromomethane	12.000	ug/kg	D	U	12.000	ug/kg	D	U	11.000	ug/kg	D	U
Carbon Tetrachloride	6.000	ug/kg	D	U	6.000	ug/kg	D	U	5.000	ug/kg	D	U
Carbon disulfide	6.000	ug/kg	D	U	6.000	ug/kg	D	U	5.000	ug/kg	D	U
Chlorobenzene	2.000	ug/kg	D	J	6.000	ug/kg	D	J	5.000	ug/kg	D	U
Chloroethane	12.000	ug/kg	D	U	12.000	ug/kg	D	U	11.000	ug/kg	D	U
Chloroform	6.000	ug/kg	D	U	6.000	ug/kg	D	U	5.000	ug/kg	D	U
Chloromethane	12.000	ug/kg	D	U	12.000	ug/kg	D	U	11.000	ug/kg	D	U
Dibromochloromethane	6.000	ug/kg	D	U	6.000	ug/kg	D	U	5.000	ug/kg	D	U
Dibromomethane	NA				12.600	ug/kg	D	U	NA			
Dichlorodifluoromethane	NA				253.000	ug/kg	D	R	NA			
Ethyl cyanide	NA				126.000	ug/kg	D	UJ	NA			
Ethyl methacrylate	NA				12.600	ug/kg	D	UJ	NA			
Ethylbenzene	6.000	ug/kg	D	U	18.000	ug/kg	D	-	5.000	ug/kg	D	U
Iodomethane	NA				6.310	ug/kg	D	U	NA			
Isobutyl alcohol	NA				25.300	ug/kg	D	R	NA			
Methacrylonitrile	NA				12.600	ug/kg	D	U	NA			
Methyl methacrylate	NA				12.600	ug/kg	D	UJ	NA			
Methylene chloride	6.000	ug/kg	D	U	7.000	ug/kg	D	U	8.000	ug/kg	D	U
Pyridine	NA				25.300	ug/kg	D	R	NA			
Styrene	6.000	ug/kg	D	U	6.000	ug/kg	D	U	5.000	ug/kg	D	U
Tetrachloroethene	6.000	ug/kg	D	U	6.000	ug/kg	D	U	5.000	ug/kg	D	U
Toluene	6.000	ug/kg	D	U	8.000	ug/kg	D	-	5.000	ug/kg	D	U
Trichloroethene	6.000	ug/kg	D	U	6.000	ug/kg	D	U	5.000	ug/kg	D	U
Trichlorofluoromethane	NA				840.000	ug/kg	D	J	NA			
Vinyl Acetate	12.000	ug/kg	D	UJ	12.000	ug/kg	D	UJ	11.000	ug/kg	D	UJ
Vinyl chloride	12.000	ug/kg	D	U	12.000	ug/kg	D	U	11.000	ug/kg	D	U
Xylenes, Total	6.000	ug/kg	D	U	100.000	ug/kg	D	-	5.000	ug/kg	D	U
cis-1,3-Dichloropropene	6.000	ug/kg	D	U	6.000	ug/kg	D	U	5.000	ug/kg	D	U

000124

6508

TABLE C-6A
(Continued)

PHASE I - CHEMICAL PARAMETERS

BORING NUMBER	1719			1719			1719		
SAMPLE NUMBER	067287			067295			067300		
	3-4.5			15-16.5			18-19.5		
SAMPLING DATE	08/07/91			08/08/91			08/08/91		
CHEMICAL PARAMETERS	RESULTS	UNITS	L VQ	RESULTS	UNITS	L VQ	RESULTS	UNITS	L VQ
Volatile Organics									
trans-1,3-Dichloropropene	6.000	ug/kg	D U	6.000	ug/kg	D U	5.000	ug/kg	D U
trans-1,4-Dichloro-2-butene	NA			126.000	ug/kg	D R	NA		
Semivolatile Organics									
1,2,4,5-Tetrachlorobenzene	NA			840.000	ug/kg	D UJ	NA		
1,2,4-Trichlorobenzene	360.000	ug/kg	D U	840.000	ug/kg	D U	370.000	ug/kg	D U
1,2-Dichlorobenzene	360.000	ug/kg	D U	840.000	ug/kg	D U	370.000	ug/kg	D U
1,3,5-Trinitrobenzene	NA			840.000	ug/kg	D R	NA		
1,3-Dichlorobenzene	360.000	ug/kg	D U	840.000	ug/kg	D U	370.000	ug/kg	D U
1,3-Dinitrobenzene	NA			840.000	ug/kg	D U	NA		
1,4-Dichlorobenzene	360.000	ug/kg	D U	840.000	ug/kg	D U	370.000	ug/kg	D U
1,4-Naphthoquinone	NA			840.000	ug/kg	D UJ	NA		
1-Naphthylamine	NA			10000.000	ug/kg	D UJ	NA		
2,3,4,6-Tetrachlorophenol	NA			840.000	ug/kg	D U	NA		
2,4,5-Trichlorophenol	1700.000	ug/kg	D U	4100.000	ug/kg	D U	1800.000	ug/kg	D U
2,4,6-Trichlorophenol	360.000	ug/kg	D U	840.000	ug/kg	D U	370.000	ug/kg	D U
2,4-Dichlorophenol	360.000	ug/kg	D U	840.000	ug/kg	D U	370.000	ug/kg	D U
2,4-Dimethylphenol	360.000	ug/kg	D U	840.000	ug/kg	D U	370.000	ug/kg	D U
2,4-Dinitrophenol	1700.000	ug/kg	D U	4100.000	ug/kg	D UJ	1800.000	ug/kg	D U
2,4-Dinitrotoluene	360.000	ug/kg	D U	840.000	ug/kg	D U	370.000	ug/kg	D U
2,6-Dichlorophenol	NA			840.000	ug/kg	D UJ	NA		
2,6-Dinitrotoluene	360.000	ug/kg	D U	840.000	ug/kg	D U	370.000	ug/kg	D U
2-Acetylaminofluorene	NA			840.000	ug/kg	D U	NA		
2-Chloronaphthalene	360.000	ug/kg	D U	840.000	ug/kg	D U	370.000	ug/kg	D U
2-Chlorophenol	330.000	ug/kg	D U	840.000	ug/kg	D U	370.000	ug/kg	D U
2-Methylnaphthalene	93.000	ug/kg	D J	840.000	ug/kg	D U	370.000	ug/kg	D U
2-Methylphenol	360.000	ug/kg	D U	840.000	ug/kg	D U	370.000	ug/kg	D U
2-Naphthylamine	NA			15000.000	ug/kg	D UJ	NA		
2-Nitroaniline	1700.000	ug/kg	D U	4100.000	ug/kg	D U	1800.000	ug/kg	D U
2-Nitrophenol	360.000	ug/kg	D U	840.000	ug/kg	D U	370.000	ug/kg	D U
2-Picoline	NA			5900.000	ug/kg	D UJ	NA		
3,3'-Dichlorobenzidine	720.000	ug/kg	D UJ	1700.000	ug/kg	D U	750.000	ug/kg	D UJ
3,3'-Dimethylbenzidine	NA			6900.000	ug/kg	D U	NA		
3-Methylcholanthrene	NA			2500.000	ug/kg	D U	NA		
3-Methylphenol	NA			840.000	ug/kg	D UJ	NA		
3-Nitroaniline	1700.000	ug/kg	D U	4100.000	ug/kg	D U	1800.000	ug/kg	D U
4,6-Dinitro-2-methylphenol	1700.000	ug/kg	D U	4100.000	ug/kg	D U	1800.000	ug/kg	D U
4-Aminobiphenyl	NA			4200.000	ug/kg	D U	NA		
4-Bromophenyl phenyl ether	360.000	ug/kg	D U	840.000	ug/kg	D U	370.000	ug/kg	D U
4-Chloro-3-methylphenol	360.000	ug/kg	D U	840.000	ug/kg	D U	370.000	ug/kg	D U
4-Chlorophenylphenyl ether	360.000	ug/kg	D U	840.000	ug/kg	D U	370.000	ug/kg	D U

TABLE C-6A
(Continued)

PHASE I - CHEMICAL PARAMETERS

BORING NUMBER	1719				1719				1719			
SAMPLE NUMBER	067287				067295				067300			
	3-4.5				15-16.5				18-19.5			
SAMPLING DATE	08/07/91				08/08/91				08/08/91			
CHEMICAL PARAMETERS	RESULTS	UNITS	L	VQ	RESULTS	UNITS	L	VQ	RESULTS	UNITS	L	VQ
Semivolatile Organics												
4-Methylphenol	360.000	ug/kg	D	U	840.000	ug/kg	D	U	370.000	ug/kg	D	U
4-Nitroaniline	1700.000	ug/kg	D	U	4100.000	ug/kg	D	U	1800.000	ug/kg	D	U
4-Nitrophenol	1700.000	ug/kg	D	U	4100.000	ug/kg	D	U	1800.000	ug/kg	D	U
4-Nitroquinoline-1-oxide	NA				840.000	ug/kg	D	UJ	NA			
5-Nitro-o-toluidine	NA				1700.000	ug/kg	D	U	NA			
7,12-Dimethylbenz(a)anthracene	NA				1700.000	ug/kg	D	U	NA			
Acenaphthene	840.000	ug/kg	D	-	840.000	ug/kg	D	U	370.000	ug/kg	D	U
Acenaphthylene	360.000	ug/kg	D	U	840.000	ug/kg	D	U	370.000	ug/kg	D	U
Acetophenone	NA				840.000	ug/kg	D	UJ	NA			
Aniline	NA				4300.000	ug/kg	D	U	NA			
Anthracene	1000.000	ug/kg	D	-	130.000	ug/kg	D	J	370.000	ug/kg	D	U
Aramite	NA				840.000	ug/kg	D	U	NA			
Benzo(a)anthracene	7500.000	ug/kg	D	-	290.000	ug/kg	D	J	72.000	ug/kg	D	J
Benzo(a)pyrene	8200.000	ug/kg	D	-	290.000	ug/kg	D	J	370.000	ug/kg	D	U
Benzo(b)fluoranthene	15000.000	ug/kg	D	-	260.000	ug/kg	D	J	150.000	ug/kg	D	J
Benzo(g,h,i)perylene	360.000	ug/kg	D	U	300.000	ug/kg	D	J	370.000	ug/kg	D	U
Benzo(k)fluoranthene	360.000	ug/kg	D	U	300.000	ug/kg	D	J	370.000	ug/kg	D	U
Benzoic acid	1700.000	ug/kg	D	UJ	110.000	ug/kg	D	J	1800.000	ug/kg	D	UJ
Benzyl alcohol	360.000	ug/kg	D	U	840.000	ug/kg	D	U	370.000	ug/kg	D	U
Butyl benzyl phthalate	360.000	ug/kg	D	U	840.000	ug/kg	D	U	370.000	ug/kg	D	U
Chrysene	5600.000	ug/kg	D	-	370.000	ug/kg	D	J	74.000	ug/kg	D	J
Di-n-butyl phthalate	360.000	ug/kg	D	U	120.000	ug/kg	D	J	370.000	ug/kg	D	U
Di-n-octyl phthalate	360.000	ug/kg	D	U	840.000	ug/kg	D	U	370.000	ug/kg	D	U
Diallate	NA				840.000	ug/kg	D	UJ	NA			
Dibenzo(a,h)anthracene	49.000	ug/kg	D	J	110.000	ug/kg	D	J	370.000	ug/kg	D	U
Dibenzofuran	340.000	ug/kg	D	J	840.000	ug/kg	D	U	370.000	ug/kg	D	U
Diethyl phthalate	360.000	ug/kg	D	U	840.000	ug/kg	D	U	370.000	ug/kg	D	U
Dimethyl phthalate	360.000	ug/kg	D	U	840.000	ug/kg	D	U	370.000	ug/kg	D	U
Diphenylamine	NA				840.000	ug/kg	D	UJ	NA			
Ethyl methanesulfonate	NA				840.000	ug/kg	D	UJ	NA			
Fluoranthene	12000.000	ug/kg	D	-	720.000	ug/kg	D	J	150.000	ug/kg	D	J
Fluorene	640.000	ug/kg	D	-	840.000	ug/kg	D	U	370.000	ug/kg	D	U
Hexachlorobenzene	360.000	ug/kg	D	U	840.000	ug/kg	D	U	370.000	ug/kg	D	U
Hexachlorobutadiene	360.000	ug/kg	D	U	840.000	ug/kg	D	U	370.000	ug/kg	D	U
Hexachlorocyclopentadiene	360.000	ug/kg	D	U	840.000	ug/kg	D	UJ	370.000	ug/kg	D	U
Hexachloroethane	360.000	ug/kg	D	U	840.000	ug/kg	D	U	370.000	ug/kg	D	U
Hexachlorophene	NA				4300.000	ug/kg	D	UJ	NA			
Hexachloropropene	NA				1700.000	ug/kg	D	R	NA			
Indeno(1,2,3-cd)pyrene	5500.000	ug/kg	D	-	210.000	ug/kg	D	J	370.000	ug/kg	D	U
Isophorone	360.000	ug/kg	D	U	840.000	ug/kg	D	U	370.000	ug/kg	D	U
Isosafrole	NA				840.000	ug/kg	D	UJ	NA			
Methapyrilene	NA				3400.000	ug/kg	D	R	NA			

000116

TABLE C-6A
(Continued)

PHASE I - CHEMICAL PARAMETERS

BORING NUMBER	1719			1719			1719		
SAMPLE NUMBER	067287			067295			067300		
	3-4.5			15-16.5			18-19.5		
SAMPLING DATE	08/07/91			08/08/91			08/08/91		
CHEMICAL PARAMETERS	RESULTS	UNITS	L VQ	RESULTS	UNITS	L VQ	RESULTS	UNITS	L VQ
Semivolatile Organics									
Methyl methanesulfonate	NA			840.000	ug/kg	D UJ	NA		
Methyl parathion	100.000	ug/kg	C U	100.000	ug/kg	C U	100.000	ug/kg	C U
N-Nitroso-di-n-propylamine	360.000	ug/kg	D U	840.000	ug/kg	D U	370.000	ug/kg	D U
N-Nitrosodi-n-butylamine	NA			1700.000	ug/kg	D U	NA		
N-Nitrosodiethylamine	NA			840.000	ug/kg	D UJ	NA		
N-Nitrosodimethylamine	NA			840.000	ug/kg	D U	NA		
N-Nitrosodiphenylamine	360.000	ug/kg	D U	840.000	ug/kg	D U	370.000	ug/kg	D U
N-Nitrosomethylethylamine	NA			840.000	ug/kg	D UJ	NA		
N-Nitrosomorpholine	NA			840.000	ug/kg	D U	NA		
N-Nitrosopiperidine	NA			840.000	ug/kg	D UJ	NA		
N-Nitrosopyrrolidine	NA			840.000	ug/kg	D U	NA		
Naphthalene	140.000	ug/kg	D J	840.000	ug/kg	D U	370.000	ug/kg	D U
Nitrobenzene	360.000	ug/kg	D U	840.000	ug/kg	D U	370.000	ug/kg	D U
O,O,O-Triethylphosphorothioate	100.000	ug/kg	D U	100.000	ug/kg	D U	100.000	ug/kg	D U
Parathion	100.000	ug/kg	C U	100.000	ug/kg	C U	100.000	ug/kg	C U
Pentachlorobenzene	NA			1700.000	ug/kg	D U	NA		
Pentachloroethane	NA			1700.000	ug/kg	D UJ	NA		
Pentachloronitrobenzene	NA			1700.000	ug/kg	D U	NA		
Pentachlorophenol	1700.000	ug/kg	D U	4100.000	ug/kg	D U	1800.000	ug/kg	D U
Phenacetin	NA			840.000	ug/kg	D U	NA		
Phenanthrene	4800.000	ug/kg	D -	620.000	ug/kg	D J	83.000	ug/kg	D J
Phenol	360.000	ug/kg	D U	840.000	ug/kg	D U	370.000	ug/kg	D U
Pronamide	NA			2500.000	ug/kg	D U	NA		
Pyrene	12000.000	ug/kg	D -	610.000	ug/kg	D J	140.000	ug/kg	D J
Safrole	NA			840.000	ug/kg	D UJ	NA		
Sulfotep	100.000	ug/kg	C U	100.000	ug/kg	C U	100.000	ug/kg	C U
a,a-Dimethylphenethylamine	NA			840.000	ug/kg	D U	NA		
bis(2-Chloroethoxy)methane	360.000	ug/kg	D U	840.000	ug/kg	D U	370.000	ug/kg	D U
bis(2-Chloroethyl)ether	360.000	ug/kg	D U	840.000	ug/kg	D U	370.000	ug/kg	D U
bis(2-Chloroisopropyl) ether	360.000	ug/kg	D U	840.000	ug/kg	D U	370.000	ug/kg	D U
bis(2-Ethylhexyl) phthalate	360.000	ug/kg	D U	1200.000	ug/kg	D -	40.000	ug/kg	D J
o-Toluidine	NA			840.000	ug/kg	D UJ	NA		
p-Chloroaniline	360.000	ug/kg	D U	840.000	ug/kg	D U	370.000	ug/kg	D U
p-Dimethylaminoazobenzene	NA			2500.000	ug/kg	D U	NA		
p-Phenylenediamine	NA			4200.000	ug/kg	D UJ	NA		
Herbicide Organics									
2,4,5-T	NA			49.000	ug/kg	D U	NA		
2,4,5-TP (Silvex)	NA			45.000	ug/kg	D U	NA		
2,4-D	NA			250.000	ug/kg	D U	NA		
Dinoseb	NA			18.000	ug/kg	D U	NA		

000412

TABLE C-6A
(Continued)

PHASE I - CHEMICAL PARAMETERS

BORING NUMBER	1719				1719				1719			
SAMPLE NUMBER	067287				067295				067300			
	3-4.5				15-16.5				18-19.5			
SAMPLING DATE	08/07/91				08/08/91				08/08/91			
CHEMICAL PARAMETERS	RESULTS	UNITS	L	VQ	RESULTS	UNITS	L	VQ	RESULTS	UNITS	L	VQ
Pesticide Organics/PCBs												
4,4'-DDD	160.000	ug/kg	D	U	310.000	ug/kg	D	U	18.000	ug/kg	D	U
4,4'-DDE	160.000	ug/kg	D	U	310.000	ug/kg	D	U	18.000	ug/kg	D	U
4,4'-DDT	160.000	ug/kg	D	U	310.000	ug/kg	D	U	18.000	ug/kg	D	U
Aldrin	79.000	ug/kg	D	U	150.000	ug/kg	D	U	9.100	ug/kg	D	U
Aroclor-1016	790.000	ug/kg	D	U	1500.000	ug/kg	D	U	91.000	ug/kg	D	U
Aroclor-1221	790.000	ug/kg	D	U	1500.000	ug/kg	D	U	91.000	ug/kg	D	U
Aroclor-1232	790.000	ug/kg	D	U	1500.000	ug/kg	D	U	91.000	ug/kg	D	U
Aroclor-1242	790.000	ug/kg	D	U	1500.000	ug/kg	D	U	91.000	ug/kg	D	U
Aroclor-1248	790.000	ug/kg	D	U	1500.000	ug/kg	D	U	91.000	ug/kg	D	U
Aroclor-1254	1600.000	ug/kg	D	U	3100.000	ug/kg	D	U	180.000	ug/kg	D	U
Aroclor-1260	1600.000	ug/kg	D	U	3100.000	ug/kg	D	U	180.000	ug/kg	D	U
Azinphosmethyl	200.000	ug/kg	C	U	200.000	ug/kg	C	U	200.000	ug/kg	C	U
Chlorobenzilate	NA				310.000	ug/kg	D	U	NA			
Demeton	200.000	ug/kg	C	U	200.000	ug/kg	C	U	200.000	ug/kg	C	U
Diazinon	100.000	ug/kg	C	U	100.000	ug/kg	C	U	100.000	ug/kg	C	U
Dieldrin	160.000	ug/kg	D	U	310.000	ug/kg	D	U	18.000	ug/kg	D	U
Dimethoate	100.000	ug/kg	C	U	100.000	ug/kg	C	U	100.000	ug/kg	C	U
Disulfoton	100.000	ug/kg	C	U	100.000	ug/kg	C	U	100.000	ug/kg	C	U
Endosulfan II	160.000	ug/kg	D	U	310.000	ug/kg	D	U	18.000	ug/kg	D	U
Endosulfan sulfate	160.000	ug/kg	D	U	310.000	ug/kg	D	U	18.000	ug/kg	D	U
Endosulfan-I	79.000	ug/kg	D	U	150.000	ug/kg	D	U	9.100	ug/kg	D	U
Endrin	160.000	ug/kg	D	U	310.000	ug/kg	D	U	18.000	ug/kg	D	U
Endrin ketone	160.000	ug/kg	D	U	310.000	ug/kg	D	U	18.000	ug/kg	D	U
Ethion	100.000	ug/kg	C	U	100.000	ug/kg	C	U	100.000	ug/kg	C	U
Famphur	100.000	ug/kg	C	U	100.000	ug/kg	C	U	100.000	ug/kg	C	U
Heptachlor	79.000	ug/kg	D	U	150.000	ug/kg	D	U	9.100	ug/kg	D	U
Heptachlor epoxide	79.000	ug/kg	D	U	150.000	ug/kg	D	U	9.100	ug/kg	D	U
Isodrin	NA				150.000	ug/kg	D	U	NA			
Kepone	NA				310.000	ug/kg	D	U	NA			
Malathion	100.000	ug/kg	C	U	100.000	ug/kg	C	U	100.000	ug/kg	C	U
Methoxychlor	790.000	ug/kg	D	U	1500.000	ug/kg	D	U	91.000	ug/kg	D	U
Phorate	100.000	ug/kg	C	U	100.000	ug/kg	C	U	100.000	ug/kg	C	U
Tetraethylpyrophosphate	400.000	ug/kg	C	U	400.000	ug/kg	C	U	400.000	ug/kg	C	U
Thionazin	100.000	ug/kg	C	U	100.000	ug/kg	C	U	100.000	ug/kg	C	U
Toxaphene	1600.000	ug/kg	D	U	3100.000	ug/kg	D	U	180.000	ug/kg	D	U
alpha-BHC	79.000	ug/kg	D	U	150.000	ug/kg	D	U	9.100	ug/kg	D	U
alpha-Chlordane	790.000	ug/kg	D	U	1500.000	ug/kg	D	U	91.000	ug/kg	D	U
beta-BHC	79.000	ug/kg	D	U	150.000	ug/kg	D	U	9.100	ug/kg	D	U
delta-BHC	79.000	ug/kg	D	U	150.000	ug/kg	D	U	9.100	ug/kg	D	U
gamma-BHC (Lindane)	79.000	ug/kg	D	U	150.000	ug/kg	D	U	9.100	ug/kg	D	U
gamma-Chlordane	790.000	ug/kg	D	U	1500.000	ug/kg	D	U	91.000	ug/kg	D	U
Dioxin Furan												
1,2,3,4,6,7,8-Heptachlorodibenzo-p-dioxin	0.380	ug/kg	E	-	0.031	ug/kg	E	U	0.020	ug/kg	E	U

TABLE C-6A
(Continued)

PHASE I - CHEMICAL PARAMETERS

BORING NUMBER	1719				1719				1719			
SAMPLE NUMBER	067287				067295				067300			
	3-4.5				15-16.5				18-19.5			
SAMPLING DATE	08/07/91				08/08/91				08/08/91			
CHEMICAL PARAMETERS	RESULTS	UNITS	L	VQ	RESULTS	UNITS	L	VQ	RESULTS	UNITS	L	VQ
Dioxin Furan												
1,2,3,4,6,7,8-Heptachlorodibenzofuran	0.073	ug/kg	E	-	0.017	ug/kg	E	U	0.067	ug/kg	E	U
1,2,3,4,7,8,9-Heptachlorodibenzofuran	0.012	ug/kg	E	U	0.022	ug/kg	E	U	0.085	ug/kg	E	U
1,2,3,4,7,8-Hexachlorodibenzo-p-dioxin	0.052	ug/kg	E	U	0.077	ug/kg	E	U	0.019	ug/kg	E	U
1,2,3,4,7,8-Hexachlorodibenzofuran	0.064	ug/kg	E	U	0.025	ug/kg	E	U	0.026	ug/kg	E	U
1,2,3,6,7,8-Hexachlorodibenzo-p-dioxin	0.041	ug/kg	E	U	0.061	ug/kg	E	U	0.015	ug/kg	E	U
1,2,3,6,7,8-Hexachlorodibenzofuran	0.061	ug/kg	E	U	0.024	ug/kg	E	U	0.025	ug/kg	E	U
1,2,3,7,8,9-Hexachlorodibenzo-p-dioxin	0.043	ug/kg	E	U	0.063	ug/kg	E	U	0.015	ug/kg	E	U
1,2,3,7,8,9-Hexachlorodibenzofuran	0.075	ug/kg	E	U	0.029	ug/kg	E	U	0.030	ug/kg	E	U
1,2,3,7,8-Pentachlorodibenzo-p-dioxin	0.075	ug/kg	E	UJ	0.170	ug/kg	E	UJ	0.076	ug/kg	E	UJ
1,2,3,7,8-Pentachlorodibenzofuran	0.014	ug/kg	E	UJ	0.130	ug/kg	E	UJ	0.018	ug/kg	E	UJ
2,3,4,6,7,8-Hexachlorodibenzofuran	0.075	ug/kg	E	U	0.029	ug/kg	E	U	0.030	ug/kg	E	U
2,3,4,7,8-Pentachlorodibenzofuran	0.013	ug/kg	E	UJ	0.130	ug/kg	E	UJ	0.018	ug/kg	E	UJ
2,3,7,8-TCDD	0.310	ug/kg	E	U	0.350	ug/kg	E	U	0.250	ug/kg	E	U
2,3,7,8-TCDF	0.140	ug/kg	E	U	0.370	ug/kg	E	U	0.130	ug/kg	E	U
Heptachlorodibenzo-p-dioxin	0.650	ug/kg	E	-	0.031	ug/kg	E	U	0.020	ug/kg	E	U
Heptachlorodibenzofuran	0.250	ug/kg	E	-	0.019	ug/kg	E	U	0.075	ug/kg	E	U
Hexachlorodibenzo-p-dioxin	0.045	ug/kg	E	U	0.066	ug/kg	E	U	0.016	ug/kg	E	U
Hexachlorodibenzofuran	0.068	ug/kg	E	UJ	0.026	ug/kg	E	U	0.028	ug/kg	E	U
Octachlorodibenzo-p-dioxin	7.100	ug/kg	E	J	0.710	ug/kg	E	J	0.063	ug/kg	E	J
Octachlorodibenzofuran	0.470	ug/kg	E	UJ	0.140	ug/kg	E	UJ	0.055	ug/kg	E	UJ
Pentachlorodibenzo-p-dioxin	0.075	ug/kg	E	UJ	0.170	ug/kg	E	UJ	0.076	ug/kg	E	UJ
Pentachlorodibenzofuran	0.013	ug/kg	E	UJ	0.130	ug/kg	E	UJ	0.018	ug/kg	E	UJ
Tetrachlorodibenzo-p-dioxin	0.023	ug/kg	E	U	0.024	ug/kg	E	U	0.013	ug/kg	E	U
Tetrachlorodibenzofuran	0.016	ug/kg	E	U	0.059	ug/kg	E	U	0.076	ug/kg	E	U
General Chemistry												
Sulfide	10.200	mg/kg	C	-	NA				10.700	mg/kg	C	-

TABLE C-6A
(Continued)

PHASE I - CHEMICAL PARAMETERS

BORING NUMBER	1720				1720				1720			
SAMPLE NUMBER	067307				067311				067312			
	3-4.5				7.5-9				9-10.5			
SAMPLING DATE	08/10/91				08/10/91				08/10/91			
CHEMICAL PARAMETERS	RESULTS	UNITS	L	VQ	RESULTS	UNITS	L	VQ	RESULTS	UNITS	L	VQ
Inorganics												
Aluminum	14300.000	mg/kg	D	-	9770.000	mg/kg	D	-	14100.000	mg/kg	D	-
Antimony	7.100	mg/kg	D	UJ	16.400	mg/kg	D	J	11.900	mg/kg	D	J
Arsenic	6.800	mg/kg	D	-	5.900	mg/kg	D	-	15.400	mg/kg	D	-
Barium	115.000	mg/kg	D	-	65.700	mg/kg	D	-	223.000	mg/kg	D	-
Beryllium	0.990	mg/kg	D	-	0.840	mg/kg	D	-	0.950	mg/kg	D	-
Boron	21.200	mg/kg	D	-	32.600	mg/kg	D	-	23.200	mg/kg	D	-
Cadmium	0.920	mg/kg	D	J	3.800	mg/kg	D	J	0.710	mg/kg	D	J
Calcium	9110.000	mg/kg	D	-	84700.000	mg/kg	D	-	6730.000	mg/kg	D	-
Chromium	22.400	mg/kg	D	-	25.900	mg/kg	D	-	23.400	mg/kg	D	-
Cobalt	15.100	mg/kg	D	-	10.900	mg/kg	D	-	25.800	mg/kg	D	-
Copper	24.000	mg/kg	D	-	17.800	mg/kg	D	-	29.000	mg/kg	D	-
Cyanide	0.120	mg/kg	D	U	0.120	mg/kg	D	U	0.120	mg/kg	D	U
Iron	25800.000	mg/kg	D	-	15500.000	mg/kg	D	-	36400.000	mg/kg	D	-
Lead	13.800	mg/kg	D	-	13.600	mg/kg	D	-	13.200	mg/kg	D	-
Magnesium	5120.000	mg/kg	D	-	26500.000	mg/kg	D	-	4770.000	mg/kg	D	-
Manganese	340.000	mg/kg	D	-	502.000	mg/kg	D	-	1690.000	mg/kg	D	-
Mercury	0.120	mg/kg	D	U	0.120	mg/kg	D	U	0.120	mg/kg	D	U
Molybdenum	16.000	mg/kg	D	-	14.200	mg/kg	D	-	18.800	mg/kg	D	-
Nickel	36.600	mg/kg	D	-	20.900	mg/kg	D	-	42.000	mg/kg	D	-
Potassium	830.000	mg/kg	D	-	907.000	mg/kg	D	-	867.000	mg/kg	D	-
Selenium	0.480	mg/kg	D	UJ	0.480	mg/kg	D	U	0.540	mg/kg	D	-
Silicon	564.000	mg/kg	D	J	567.000	mg/kg	D	J	494.000	mg/kg	D	J
Silver	4.200	mg/kg	D	-	14.900	mg/kg	D	-	4.000	mg/kg	D	-
Sodium	80.500	mg/kg	D	-	151.000	mg/kg	D	-	81.900	mg/kg	D	-
Thallium	0.480	mg/kg	D	U	0.480	mg/kg	D	U	0.470	mg/kg	D	U
Tin	NA				47.600	mg/kg	D	U	NA			
Vanadium	35.600	mg/kg	D	-	30.400	mg/kg	D	-	37.200	mg/kg	D	-
Zinc	60.500	mg/kg	D	-	41.600	mg/kg	D	-	63.000	mg/kg	D	-
Volatile Organics												
1,1,1,2-Tetrachloroethane	NA				6.000	ug/kg	D	U	NA			
1,1,1-Trichloroethane	6.000	ug/kg	D	U	6.000	ug/kg	D	UJ	6.000	ug/kg	D	U
1,1,2,2-Tetrachloroethane	6.000	ug/kg	D	U	6.000	ug/kg	D	U	6.000	ug/kg	D	U
1,1,2-Trichloroethane	6.000	ug/kg	D	U	6.000	ug/kg	D	U	6.000	ug/kg	D	U
1,1-Dichloroethane	6.000	ug/kg	D	U	6.000	ug/kg	D	U	6.000	ug/kg	D	U
1,1-Dichloroethene	6.000	ug/kg	D	U	6.000	ug/kg	D	U	6.000	ug/kg	D	U
1,2,3-Trichloropropane	NA				6.000	ug/kg	D	UJ	NA			
1,2-Dibromo-3-chloropropane	NA				12.000	ug/kg	D	UJ	NA			
1,2-Dibromoethane	NA				6.000	ug/kg	D	U	NA			
1,2-Dichloroethane	6.000	ug/kg	D	U	6.000	ug/kg	D	U	6.000	ug/kg	D	U
1,2-Dichloroethene	6.000	ug/kg	D	U	12.000	ug/kg	D	-	6.000	ug/kg	D	U

000420

6508

TABLE C-6A
(Continued)

PHASE I - CHEMICAL PARAMETERS

BORING NUMBER	1720				1720				1720			
SAMPLE NUMBER	067307				067311				067312			
	3-4.5				7.5-9				9-10.5			
SAMPLING DATE	08/10/91				08/10/91				08/10/91			
CHEMICAL PARAMETERS	RESULTS	UNITS	L	VQ	RESULTS	UNITS	L	VQ	RESULTS	UNITS	L	VQ
Volatile Organics												
1,2-Dichloropropane	6.000	ug/kg	D	U	6.000	ug/kg	D	U	6.000	ug/kg	D	U
1,4-Dioxane	NA				240.000	ug/kg	D	R	NA			
2-Butanone	12.000	ug/kg	D	U	12.000	ug/kg	D	UJ	12.000	ug/kg	D	U
2-Chloro-1,3-butadiene	NA				6.000	ug/kg	D	U	NA			
2-Hexanone	12.000	ug/kg	D	U	12.000	ug/kg	D	UJ	12.000	ug/kg	D	U
3-Chloropropene	NA				6.000	ug/kg	D	U	NA			
4-Methyl-2-pentanone	12.000	ug/kg	D	U	12.000	ug/kg	D	UJ	12.000	ug/kg	D	U
Acetone	12.000	ug/kg	D	UJ	33.000	ug/kg	D	UJ	16.000	ug/kg	D	UJ
Acetonitrile	NA				1200.000	ug/kg	D	UJ	NA			
Acrolein	NA				12.000	ug/kg	D	UJ	NA			
Acrylonitrile	NA				12.000	ug/kg	D	R	NA			
Benzene	6.000	ug/kg	D	U	6.000	ug/kg	D	U	6.000	ug/kg	D	U
Bromodichloromethane	6.000	ug/kg	D	U	6.000	ug/kg	D	U	6.000	ug/kg	D	U
Bromoform	6.000	ug/kg	D	UJ	6.000	ug/kg	D	U	6.000	ug/kg	D	UJ
Bromomethane	12.000	ug/kg	D	UJ	12.000	ug/kg	D	U	12.000	ug/kg	D	UJ
Carbon Tetrachloride	6.000	ug/kg	D	U	6.000	ug/kg	D	U	6.000	ug/kg	D	U
Carbon disulfide	6.000	ug/kg	D	U	6.000	ug/kg	D	U	6.000	ug/kg	D	U
Chlorobenzene	6.000	ug/kg	D	U	6.000	ug/kg	D	U	6.000	ug/kg	D	U
Chloroethane	12.000	ug/kg	D	UJ	12.000	ug/kg	D	U	12.000	ug/kg	D	UJ
Chloroform	6.000	ug/kg	D	U	6.000	ug/kg	D	U	6.000	ug/kg	D	U
Chloromethane	12.000	ug/kg	D	UJ	12.000	ug/kg	D	U	12.000	ug/kg	D	UJ
Dibromochloromethane	6.000	ug/kg	D	U	6.000	ug/kg	D	U	6.000	ug/kg	D	U
Dibromomethane	NA				12.000	ug/kg	D	U	NA			
Dichlorodifluoromethane	NA				240.000	ug/kg	D	R	NA			
Ethyl cyanide	NA				120.000	ug/kg	D	UJ	NA			
Ethyl methacrylate	NA				12.000	ug/kg	D	U	NA			
Ethylbenzene	6.000	ug/kg	D	U	6.000	ug/kg	D	U	6.000	ug/kg	D	U
Iodomethane	NA				6.000	ug/kg	D	U	NA			
Isobutyl alcohol	NA				24.000	ug/kg	D	R	NA			
Methacrylonitrile	NA				12.000	ug/kg	D	U	NA			
Methyl methacrylate	NA				12.000	ug/kg	D	UJ	NA			
Methylene chloride	6.000	ug/kg	D	U	6.000	ug/kg	D	-	25.000	ug/kg	D	U
Pyridine	NA				24.000	ug/kg	D	R	NA			
Styrene	6.000	ug/kg	D	U	6.000	ug/kg	D	U	6.000	ug/kg	D	U
Tetrachloroethene	6.000	ug/kg	D	U	6.000	ug/kg	D	U	6.000	ug/kg	D	U
Toluene	6.000	ug/kg	D	U	6.000	ug/kg	D	U	6.000	ug/kg	D	U
Trichloroethene	6.000	ug/kg	D	U	6.000	ug/kg	D	U	6.000	ug/kg	D	U
Trichlorofluoromethane	NA				6.000	ug/kg	D	UJ	NA			
Vinyl Acetate	12.000	ug/kg	D	U	12.000	ug/kg	D	UJ	12.000	ug/kg	D	U
Vinyl chloride	12.000	ug/kg	D	U	12.000	ug/kg	D	U	12.000	ug/kg	D	U
Xylenes, Total	6.000	ug/kg	D	U	6.000	ug/kg	D	U	6.000	ug/kg	D	U
cis-1,3-Dichloropropene	6.000	ug/kg	D	U	6.000	ug/kg	D	U	6.000	ug/kg	D	U

000122

TABLE C-6A
(Continued)

PHASE I - CHEMICAL PARAMETERS

BORING NUMBER	1720			1720			1720		
SAMPLE NUMBER	067307			067311			067312		
	3-4.5			7.5-9			9-10.5		
SAMPLING DATE	08/10/91			08/10/91			08/10/91		
CHEMICAL PARAMETERS	RESULTS	UNITS	L VQ	RESULTS	UNITS	L VQ	RESULTS	UNITS	L VQ
Volatile Organics									
trans-1,3-Dichloropropene	6.000	ug/kg	D U	6.000	ug/kg	D U	6.000	ug/kg	D U
trans-1,4-Dichloro-2-butene	NA			120.000	ug/kg	D R	NA		
Semivolatile Organics									
1,2,4,5-Tetrachlorobenzene	NA			410.000	ug/kg	D U	NA		
1,2,4-Trichlorobenzene	400.000	ug/kg	D R	410.000	ug/kg	D U	390.000	ug/kg	D R
1,2-Dichlorobenzene	400.000	ug/kg	D R	410.000	ug/kg	D U	390.000	ug/kg	D R
1,3,5-Trinitrobenzene	NA			410.000	ug/kg	D U	NA		
1,3-Dichlorobenzene	400.000	ug/kg	D R	410.000	ug/kg	D U	390.000	ug/kg	D R
1,3-Dinitrobenzene	NA			410.000	ug/kg	D U	NA		
1,4-Dichlorobenzene	400.000	ug/kg	D R	410.000	ug/kg	D U	390.000	ug/kg	D R
1,4-Naphthoquinone	NA			410.000	ug/kg	D U	NA		
1-Naphthylamine	NA			5000.000	ug/kg	D U	NA		
2,3,4,6-Tetrachlorophenol	NA			410.000	ug/kg	D U	NA		
2,4,5-Trichlorophenol	1900.000	ug/kg	D R	2000.000	ug/kg	D U	1900.000	ug/kg	D R
2,4,6-Trichlorophenol	400.000	ug/kg	D R	410.000	ug/kg	D UJ	390.000	ug/kg	D R
2,4-Dichlorophenol	400.000	ug/kg	D R	410.000	ug/kg	D U	390.000	ug/kg	D R
2,4-Dimethylphenol	400.000	ug/kg	D R	410.000	ug/kg	D U	390.000	ug/kg	D R
2,4-Dinitrophenol	1900.000	ug/kg	D R	2000.000	ug/kg	D U	1900.000	ug/kg	D R
2,4-Dinitrotoluene	400.000	ug/kg	D R	410.000	ug/kg	D U	390.000	ug/kg	D R
2,6-Dichlorophenol	NA			410.000	ug/kg	D U	NA		
2,6-Dinitrotoluene	400.000	ug/kg	D R	410.000	ug/kg	D U	390.000	ug/kg	D R
2-Acetylaminofluorene	NA			410.000	ug/kg	D U	NA		
2-Chloronaphthalene	400.000	ug/kg	D R	410.000	ug/kg	D U	390.000	ug/kg	D R
2-Chlorophenol	49.000	ug/kg	D J	410.000	ug/kg	D U	390.000	ug/kg	D R
2-Methylnaphthalene	400.000	ug/kg	D R	410.000	ug/kg	D U	390.000	ug/kg	D R
2-Methylphenol	400.000	ug/kg	D R	410.000	ug/kg	D U	390.000	ug/kg	D R
2-Naphthylamine	NA			7100.000	ug/kg	D U	NA		
2-Nitroaniline	1900.000	ug/kg	D R	2000.000	ug/kg	D U	1900.000	ug/kg	D R
2-Nitrophenol	400.000	ug/kg	D R	410.000	ug/kg	D U	390.000	ug/kg	D R
2-Picoline	NA			2900.000	ug/kg	D U	NA		
3,3'-Dichlorobenzidine	790.000	ug/kg	D R	820.000	ug/kg	D U	780.000	ug/kg	D R
3,3'-Dimethylbenzidine	NA			3400.000	ug/kg	D U	NA		
3-Methylcholanthrene	NA			1200.000	ug/kg	D U	NA		
3-Methylphenol	NA			410.000	ug/kg	D U	NA		
3-Nitroaniline	1900.000	ug/kg	D R	2000.000	ug/kg	D UJ	1900.000	ug/kg	D R
4,6-Dinitro-2-methylphenol	1900.000	ug/kg	D R	2000.000	ug/kg	D U	1900.000	ug/kg	D R
4-Aminobiphenyl	NA			2100.000	ug/kg	D U	NA		
4-Bromophenyl phenyl ether	400.000	ug/kg	D R	410.000	ug/kg	D U	390.000	ug/kg	D R
4-Chloro-3-methylphenol	55.000	ug/kg	D J	410.000	ug/kg	D U	390.000	ug/kg	D R
4-Chlorophenylphenyl ether	400.000	ug/kg	D R	410.000	ug/kg	D U	390.000	ug/kg	D R

000322

TABLE C-6A
(Continued)

PHASE I - CHEMICAL PARAMETERS

BORING NUMBER	1720			1720			1720		
SAMPLE NUMBER	067307			067311			067312		
	3-4.5			7.5-9			9-10.5		
SAMPLING DATE	08/10/91			08/10/91			08/10/91		
CHEMICAL PARAMETERS	RESULTS	UNITS	L VQ	RESULTS	UNITS	L VQ	RESULTS	UNITS	L VQ
Semivolatile Organics									
4-Methylphenol	400.000	ug/kg	D R	410.000	ug/kg	D U	390.000	ug/kg	D R
4-Nitroaniline	1900.000	ug/kg	D R	2000.000	ug/kg	D U	1900.000	ug/kg	D R
4-Nitrophenol	1900.000	ug/kg	D R	2000.000	ug/kg	D UJ	1900.000	ug/kg	D R
4-Nitroquinoline-1-oxide	NA			410.000	ug/kg	D U	NA		
5-Nitro-o-toluidine	NA			830.000	ug/kg	D U	NA		
7,12-Dimethylbenz(a)anthracene	NA			830.000	ug/kg	D U	NA		
Acenaphthene	53.000	ug/kg	D J	410.000	ug/kg	D U	390.000	ug/kg	D R
Acenaphthylene	400.000	ug/kg	D R	410.000	ug/kg	D U	390.000	ug/kg	D R
Acetophenone	NA			410.000	ug/kg	D U	NA		
Aniline	NA			2100.000	ug/kg	D U	NA		
Anthracene	400.000	ug/kg	D R	410.000	ug/kg	D U	390.000	ug/kg	D R
Aramite	NA			410.000	ug/kg	D U	NA		
Benzo(a)anthracene	130.000	ug/kg	D J	43.000	ug/kg	D J	390.000	ug/kg	D R
Benzo(a)pyrene	69.000	ug/kg	D J	410.000	ug/kg	D U	390.000	ug/kg	D R
Benzo(b)fluoranthene	190.000	ug/kg	D J	54.000	ug/kg	D J	390.000	ug/kg	D R
Benzo(g,h,i)perylene	400.000	ug/kg	D R	410.000	ug/kg	D U	390.000	ug/kg	D R
Benzo(k)fluoranthene	400.000	ug/kg	D R	410.000	ug/kg	D U	390.000	ug/kg	D R
Benzoic acid	1900.000	ug/kg	D R	2000.000	ug/kg	D UJ	1900.000	ug/kg	D R
Benzyl alcohol	400.000	ug/kg	D R	410.000	ug/kg	D U	390.000	ug/kg	D R
Butyl benzyl phthalate	400.000	ug/kg	D R	410.000	ug/kg	D U	390.000	ug/kg	D R
Chrysene	140.000	ug/kg	D J	47.000	ug/kg	D J	390.000	ug/kg	D R
Di-n-butyl phthalate	400.000	ug/kg	D R	410.000	ug/kg	D U	390.000	ug/kg	D R
Di-n-octyl phthalate	400.000	ug/kg	D R	410.000	ug/kg	D U	390.000	ug/kg	D R
Diallate	NA			410.000	ug/kg	D U	NA		
Dibenzo(a,h)anthracene	400.000	ug/kg	D R	410.000	ug/kg	D U	390.000	ug/kg	D R
Dibenzofuran	400.000	ug/kg	D R	410.000	ug/kg	D U	390.000	ug/kg	D R
Diethyl phthalate	400.000	ug/kg	D R	410.000	ug/kg	D U	750.000	ug/kg	D J
Dimethyl phthalate	400.000	ug/kg	D R	410.000	ug/kg	D U	390.000	ug/kg	D R
Diphenylamine	NA			410.000	ug/kg	D U	NA		
Ethyl methanesulfonate	NA			410.000	ug/kg	D U	NA		
Fluoranthene	250.000	ug/kg	D J	94.000	ug/kg	D J	390.000	ug/kg	D R
Fluorene	400.000	ug/kg	D R	410.000	ug/kg	D U	390.000	ug/kg	D R
Hexachlorobenzene	400.000	ug/kg	D R	410.000	ug/kg	D U	390.000	ug/kg	D R
Hexachlorobutadiene	400.000	ug/kg	D R	410.000	ug/kg	D U	390.000	ug/kg	D R
Hexachlorocyclopentadiene	400.000	ug/kg	D R	410.000	ug/kg	D U	390.000	ug/kg	D R
Hexachloroethane	400.000	ug/kg	D R	410.000	ug/kg	D UJ	390.000	ug/kg	D R
Hexachlorophene	NA			2100.000	ug/kg	D U	NA		
Hexachloropropene	NA			830.000	ug/kg	D U	NA		
Indeno(1,2,3-cd)pyrene	400.000	ug/kg	D R	410.000	ug/kg	D U	390.000	ug/kg	D R
Isophorone	400.000	ug/kg	D R	410.000	ug/kg	D U	390.000	ug/kg	D R
Isosafrole	NA			410.000	ug/kg	D U	NA		
Methapyrilene	NA			1700.000	ug/kg	D U	NA		

000123

TABLE C-6A
(Continued)

PHASE I - CHEMICAL PARAMETERS

BORING NUMBER	1720			1720			1720		
SAMPLE NUMBER	067307			067311			067312		
	3-4.5			7.5-9			9-10.5		
SAMPLING DATE	08/10/91			08/10/91			08/10/91		
CHEMICAL PARAMETERS	RESULTS	UNITS	L VQ	RESULTS	UNITS	L VQ	RESULTS	UNITS	L VQ
Semivolatile Organics									
Methyl methanesulfonate	NA			410.000	ug/kg	D U	NA		
Methyl parathion	100.000	ug/kg	C U	100.000	ug/kg	C U	100.000	ug/kg	C U
N-Nitroso-di-n-propylamine	400.000	ug/kg	D R	410.000	ug/kg	D U	390.000	ug/kg	D R
N-Nitrosodi-n-butylamine	NA			830.000	ug/kg	D U	NA		
N-Nitrosodiethylamine	NA			410.000	ug/kg	D U	NA		
N-Nitrosodimethylamine	NA			410.000	ug/kg	D U	NA		
N-Nitrosodiphenylamine	400.000	ug/kg	D R	410.000	ug/kg	D U	390.000	ug/kg	D R
N-Nitrosomethylethylamine	NA			410.000	ug/kg	D U	NA		
N-Nitrosomorpholine	NA			410.000	ug/kg	D U	NA		
N-Nitrosopiperidine	NA			410.000	ug/kg	D U	NA		
N-Nitrosopyrrolidine	NA			410.000	ug/kg	D U	NA		
Naphthalene	400.000	ug/kg	D R	410.000	ug/kg	D UJ	390.000	ug/kg	D R
Nitrobenzene	400.000	ug/kg	D R	410.000	ug/kg	D UJ	390.000	ug/kg	D R
O,O,O-Triethylphosphorothioate	100.000	ug/kg	D U	100.000	ug/kg	D U	100.000	ug/kg	D U
Parathion	100.000	ug/kg	C U	100.000	ug/kg	C U	100.000	ug/kg	C U
Pentachlorobenzene	NA			830.000	ug/kg	D U	NA		
Pentachloroethane	NA			830.000	ug/kg	D U	NA		
Pentachloronitrobenzene	NA			830.000	ug/kg	D U	NA		
Pentachlorophenol	1900.000	ug/kg	D R	2000.000	ug/kg	D U	1900.000	ug/kg	D R
Phenacetin	NA			410.000	ug/kg	D U	NA		
Phenanthrene	160.000	ug/kg	D J	53.000	ug/kg	D J	390.000	ug/kg	D R
Phenol	61.000	ug/kg	D J	410.000	ug/kg	D UJ	390.000	ug/kg	D R
Pronamide	NA			1200.000	ug/kg	D U	NA		
Pyrene	270.000	ug/kg	D J	73.000	ug/kg	D J	390.000	ug/kg	D R
Safrole	NA			410.000	ug/kg	D U	NA		
Sulfotep	100.000	ug/kg	C U	100.000	ug/kg	C U	100.000	ug/kg	C U
a,a-Dimethylphenethylamine	NA			410.000	ug/kg	D U	NA		
bis(2-Chloroethoxy)methane	400.000	ug/kg	D R	410.000	ug/kg	D U	390.000	ug/kg	D R
bis(2-Chloroethyl)ether	400.000	ug/kg	D R	410.000	ug/kg	D U	390.000	ug/kg	D R
bis(2-Chloroisopropyl) ether	400.000	ug/kg	D R	410.000	ug/kg	D U	390.000	ug/kg	D R
bis(2-Ethylhexyl) phthalate	400.000	ug/kg	D R	410.000	ug/kg	D U	390.000	ug/kg	D R
o-Toluidine	NA			410.000	ug/kg	D U	NA		
p-Chloroaniline	400.000	ug/kg	D R	410.000	ug/kg	D U	390.000	ug/kg	D R
p-Dimethylaminoazobenzene	NA			1200.000	ug/kg	D U	NA		
p-Phenylenediamine	NA			2100.000	ug/kg	D U	NA		
Herbicide Organics									
2,4,5-T	NA			48.000	ug/kg	D U	NA		
2,4,5-TP (Silvex)	NA			44.000	ug/kg	D U	NA		
2,4-D	NA			250.000	ug/kg	D U	NA		
Dinoseb	NA			17.000	ug/kg	D U	NA		

TABLE C-6A
(Continued)

PHASE I - CHEMICAL PARAMETERS

BORING NUMBER	1720				1720				1720			
SAMPLE NUMBER	067307				067311				067312			
	3-4.5				7.5-9				9-10.5			
SAMPLING DATE	08/10/91				08/10/91				08/10/91			
CHEMICAL PARAMETERS	RESULTS	UNITS	L	VQ	RESULTS	UNITS	L	VQ	RESULTS	UNITS	L	VQ
Pesticide Organics/PCBs												
4,4'-DDD	19.000	ug/kg	D	U	20.000	ug/kg	D	U	19.000	ug/kg	D	U
4,4'-DDE	19.000	ug/kg	D	U	20.000	ug/kg	D	U	19.000	ug/kg	D	U
4,4'-DDT	19.000	ug/kg	D	U	20.000	ug/kg	D	U	19.000	ug/kg	D	U
Aldrin	9.600	ug/kg	D	U	10.000	ug/kg	D	U	9.300	ug/kg	D	U
Aroclor-1016	96.000	ug/kg	D	U	100.000	ug/kg	D	U	93.000	ug/kg	D	U
Aroclor-1221	96.000	ug/kg	D	U	100.000	ug/kg	D	U	93.000	ug/kg	D	U
Aroclor-1232	96.000	ug/kg	D	U	100.000	ug/kg	D	U	93.000	ug/kg	D	U
Aroclor-1242	96.000	ug/kg	D	U	100.000	ug/kg	D	U	93.000	ug/kg	D	U
Aroclor-1248	96.000	ug/kg	D	U	100.000	ug/kg	D	U	93.000	ug/kg	D	U
Aroclor-1254	190.000	ug/kg	D	U	200.000	ug/kg	D	U	190.000	ug/kg	D	U
Aroclor-1260	190.000	ug/kg	D	U	200.000	ug/kg	D	U	190.000	ug/kg	D	U
Azinphosmethyl	1000.000	ug/kg	C	U	1000.000	ug/kg	C	U	1000.000	ug/kg	C	U
Chlorobenzilate	NA				20.000	ug/kg	D	U	NA			
Demeton	200.000	ug/kg	C	U	200.000	ug/kg	C	U	200.000	ug/kg	C	U
Diazinon	100.000	ug/kg	C	U	100.000	ug/kg	C	U	100.000	ug/kg	C	U
Dieldrin	19.000	ug/kg	D	U	20.000	ug/kg	D	U	19.000	ug/kg	D	U
Dimethoate	100.000	ug/kg	C	U	100.000	ug/kg	C	U	100.000	ug/kg	C	U
Disulfoton	100.000	ug/kg	C	U	100.000	ug/kg	C	U	100.000	ug/kg	C	U
Endosulfan II	19.000	ug/kg	D	U	20.000	ug/kg	D	U	19.000	ug/kg	D	U
Endosulfan sulfate	19.000	ug/kg	D	U	20.000	ug/kg	D	U	19.000	ug/kg	D	U
Endosulfan-I	9.600	ug/kg	D	U	10.000	ug/kg	D	U	9.300	ug/kg	D	U
Endrin	19.000	ug/kg	D	U	20.000	ug/kg	D	U	19.000	ug/kg	D	U
Endrin ketone	19.000	ug/kg	D	U	20.000	ug/kg	D	U	19.000	ug/kg	D	U
Ethion	100.000	ug/kg	C	U	100.000	ug/kg	C	U	100.000	ug/kg	C	U
Famphur	100.000	ug/kg	C	U	100.000	ug/kg	C	U	100.000	ug/kg	C	U
Heptachlor	9.600	ug/kg	D	U	10.000	ug/kg	D	U	9.300	ug/kg	D	U
Heptachlor epoxide	9.600	ug/kg	D	U	10.000	ug/kg	D	U	9.300	ug/kg	D	U
Isodrin	NA				10.000	ug/kg	D	U	NA			
Kepone	NA				20.000	ug/kg	D	U	NA			
Malathion	100.000	ug/kg	C	U	100.000	ug/kg	C	U	100.000	ug/kg	C	U
Methoxychlor	96.000	ug/kg	D	U	100.000	ug/kg	D	U	93.000	ug/kg	D	U
Phorate	100.000	ug/kg	C	U	100.000	ug/kg	C	U	100.000	ug/kg	C	U
Tetraethylpyrophosphate	400.000	ug/kg	C	U	400.000	ug/kg	C	U	400.000	ug/kg	C	U
Thionazin	100.000	ug/kg	C	U	100.000	ug/kg	C	U	100.000	ug/kg	C	U
Toxaphene	190.000	ug/kg	D	U	200.000	ug/kg	D	U	190.000	ug/kg	D	U
alpha-BHC	9.600	ug/kg	D	U	10.000	ug/kg	D	U	9.300	ug/kg	D	U
alpha-Chlordane	96.000	ug/kg	D	U	100.000	ug/kg	D	U	93.000	ug/kg	D	U
beta-BHC	9.600	ug/kg	D	U	10.000	ug/kg	D	U	9.300	ug/kg	D	U
delta-BHC	9.600	ug/kg	D	U	10.000	ug/kg	D	U	9.300	ug/kg	D	U
gamma-BHC (Lindane)	9.600	ug/kg	D	U	10.000	ug/kg	D	U	9.300	ug/kg	D	U
gamma-Chlordane	96.000	ug/kg	D	U	100.000	ug/kg	D	U	93.000	ug/kg	D	U
Dioxin Furan												
1,2,3,4,6,7,8-Heptachlorodibenzo-p-dioxin	0.063	ug/kg	E	U	0.084	ug/kg	E	U	0.020	ug/kg	E	U

000225

TABLE C-6A
(Continued)

PHASE I - CHEMICAL PARAMETERS

BORING NUMBER	1720				1720				1720			
SAMPLE NUMBER	067307				067311				067312			
	3-4.5				7.5-9				9-10.5			
SAMPLING DATE	08/10/91				08/10/91				08/10/91			
CHEMICAL PARAMETERS	RESULTS	UNITS	L	VQ	RESULTS	UNITS	L	VQ	RESULTS	UNITS	L	VQ
Dioxin Furan												
1,2,3,4,6,7,8-Heptachlorodibenzofuran	0.012	ug/kg	E	U	0.029	ug/kg	E	U	0.012	ug/kg	E	U
1,2,3,4,7,8,9-Heptachlorodibenzofuran	0.015	ug/kg	E	U	0.037	ug/kg	E	U	0.015	ug/kg	E	U
1,2,3,4,7,8-Hexachlorodibenzo-p-dioxin	0.023	ug/kg	E	U	0.010	ug/kg	E	U	0.027	ug/kg	E	U
1,2,3,4,7,8-Hexachlorodibenzofuran	0.012	ug/kg	E	U	0.012	ug/kg	E	U	0.019	ug/kg	E	U
1,2,3,6,7,8-Hexachlorodibenzo-p-dioxin	0.018	ug/kg	E	U	0.008	ug/kg	E	U	0.021	ug/kg	E	U
1,2,3,6,7,8-Hexachlorodibenzofuran	0.012	ug/kg	E	U	0.012	ug/kg	E	U	0.018	ug/kg	E	U
1,2,3,7,8,9-Hexachlorodibenzo-p-dioxin	0.019	ug/kg	E	U	0.008	ug/kg	E	U	0.022	ug/kg	E	U
1,2,3,7,8,9-Hexachlorodibenzofuran	0.014	ug/kg	E	U	0.015	ug/kg	E	U	0.022	ug/kg	E	U
1,2,3,7,8-Pentachlorodibenzo-p-dioxin	0.047	ug/kg	E	UJ	0.170	ug/kg	E	U	0.066	ug/kg	E	UJ
1,2,3,7,8-Pentachlorodibenzofuran	0.026	ug/kg	E	UJ	0.034	ug/kg	E	UJ	0.091	ug/kg	E	UJ
2,3,4,6,7,8-Hexachlorodibenzofuran	0.014	ug/kg	E	U	0.015	ug/kg	E	U	0.022	ug/kg	E	U
2,3,4,7,8-Pentachlorodibenzofuran	0.025	ug/kg	E	UJ	0.033	ug/kg	E	UJ	0.088	ug/kg	E	UJ
2,3,7,8-TCDD	0.170	ug/kg	E	U	0.130	ug/kg	E	U	0.150	ug/kg	E	U
2,3,7,8-TCDF	0.120	ug/kg	E	U	0.083	ug/kg	E	U	0.150	ug/kg	E	U
Heptachlorodibenzo-p-dioxin	0.063	ug/kg	E	UJ	0.084	ug/kg	E	U	0.020	ug/kg	E	U
Heptachlorodibenzofuran	0.013	ug/kg	E	U	0.033	ug/kg	E	U	0.013	ug/kg	E	U
Hexachlorodibenzo-p-dioxin	0.020	ug/kg	E	U	0.009	ug/kg	E	U	0.023	ug/kg	E	U
Hexachlorodibenzofuran	0.013	ug/kg	E	U	0.013	ug/kg	E	U	0.020	ug/kg	E	U
Octachlorodibenzo-p-dioxin	7.800	ug/kg	E	J	7.200	ug/kg	E	J	0.860	ug/kg	E	J
Octachlorodibenzofuran	0.028	ug/kg	E	UJ	0.009	ug/kg	E	UJ	0.044	ug/kg	E	UJ
Pentachlorodibenzo-p-dioxin	0.047	ug/kg	E	UJ	0.170	ug/kg	E	U	0.066	ug/kg	E	UJ
Pentachlorodibenzofuran	0.026	ug/kg	E	U	0.034	ug/kg	E	UJ	0.090	ug/kg	E	UJ
Tetrachlorodibenzo-p-dioxin	0.010	ug/kg	E	U	0.030	ug/kg	E	U	0.010	ug/kg	E	U
Tetrachlorodibenzofuran	0.025	ug/kg	E	U	0.019	ug/kg	E	U	0.055	ug/kg	E	U

000126

6508

TABLE C-6A
(Continued)

PHASE I - CHEMICAL PARAMETERS

BORING NUMBER	1721			1721			1722		
SAMPLE NUMBER	067234			067237			067250		
	9-10.5			13.5-15			1.5-3		
SAMPLING DATE	07/26/91			07/27/91			07/29/91		
CHEMICAL PARAMETERS	RESULTS	UNITS	L VQ	RESULTS	UNITS	L VQ	RESULTS	UNITS	L VQ
Inorganics									
Aluminum	10800.000	mg/kg	D -	12500.000	mg/kg	D -	6400.000	mg/kg	D -
Antimony	7.700	mg/kg	D UJ	7.700	mg/kg	D UJ	6.600	mg/kg	D UJ
Arsenic	9.000	mg/kg	D J	13.800	mg/kg	D -	3.300	mg/kg	D -
Barium	71.300	mg/kg	D -	126.000	mg/kg	D J	37.300	mg/kg	D J
Beryllium	0.920	mg/kg	D J	0.930	mg/kg	D -	0.590	mg/kg	D -
Boron	25.600	mg/kg	D UJ	NA			NA		
Cadmium	1.400	mg/kg	D -	0.520	mg/kg	D U	2.700	mg/kg	D -
Calcium	45800.000	mg/kg	D -	6330.000	mg/kg	D J	113000.000	mg/kg	D J
Chromium	20.200	mg/kg	D J	21.900	mg/kg	D J	22.500	mg/kg	D J
Cobalt	9.400	mg/kg	D -	18.800	mg/kg	D -	7.500	mg/kg	D J
Copper	19.200	mg/kg	D J	28.400	mg/kg	D -	18.600	mg/kg	D -
Cyanide	0.140	mg/kg	D -	0.130	mg/kg	D U	0.790	mg/kg	D -
Iron	21300.000	mg/kg	D J	33300.000	mg/kg	D J	16000.000	mg/kg	D J
Lead	14.000	mg/kg	D J	16.700	mg/kg	D -	147.000	mg/kg	D -
Magnesium	15200.000	mg/kg	D -	5300.000	mg/kg	D J	29600.000	mg/kg	D J
Manganese	555.000	mg/kg	D J	923.000	mg/kg	D J	375.000	mg/kg	D J
Mercury	0.120	mg/kg	D U	0.120	mg/kg	D U	0.110	mg/kg	D U
Molybdenum	11.800	mg/kg	D -	14.900	mg/kg	D -	10.200	mg/kg	D J
Nickel	19.900	mg/kg	D -	41.000	mg/kg	D J	22.700	mg/kg	D J
Potassium	1140.000	mg/kg	D -	1170.000	mg/kg	D -	1230.000	mg/kg	D -
Selenium	0.520	mg/kg	D UJ	0.510	mg/kg	D U	0.440	mg/kg	D U
Silicon	1140.000	mg/kg	D -	NA			NA		
Silver	7.500	mg/kg	D -	2.600	mg/kg	D UJ	12.500	mg/kg	D J
Sodium	117.000	mg/kg	D -	83.400	mg/kg	D -	342.000	mg/kg	D -
Thallium	0.520	mg/kg	D U	0.600	mg/kg	D -	0.440	mg/kg	D U
Tin	51.100	mg/kg	D U	NA			NA		
Vanadium	26.600	mg/kg	D -	33.700	mg/kg	D -	22.200	mg/kg	D -
Zinc	47.500	mg/kg	D -	77.800	mg/kg	D -	36.400	mg/kg	D -
Volatile Organics									
1,1,1,2-Tetrachloroethane	6.440	ug/kg	D U	NA			NA		
1,1,1-Trichloroethane	6.000	ug/kg	D U	6.000	ug/kg	D U	5.000	ug/kg	D U
1,1,2,2-Tetrachloroethane	6.000	ug/kg	D U	6.000	ug/kg	D UJ	5.000	ug/kg	D U
1,1,2-Trichloroethane	6.000	ug/kg	D U	6.000	ug/kg	D U	5.000	ug/kg	D U
1,1-Dichloroethane	16.000	ug/kg	D -	6.000	ug/kg	D U	130.000	ug/kg	D -
1,1-Dichloroethene	6.000	ug/kg	D U	6.000	ug/kg	D U	5.000	ug/kg	D U
1,2,3-Trichloropropane	6.440	ug/kg	C U	NA			NA		
1,2-Dibromo-3-chloropropane	12.900	ug/kg	D U	NA			NA		
1,2-Dibromoethane	6.440	ug/kg	D U	NA			NA		
1,2-Dichloroethane	6.000	ug/kg	D U	6.000	ug/kg	D U	5.000	ug/kg	D U
1,2-Dichloroethene	6.000	ug/kg	D U	2.000	ug/kg	D J	5.000	ug/kg	D U

001127

TABLE C-6A
(Continued)

PHASE I - CHEMICAL PARAMETERS

BORING NUMBER	1721			1721			1722		
SAMPLE NUMBER	067234			067237			067250		
	9-10.5			13.5-15			1.5-3		
SAMPLING DATE	07/26/91			07/27/91			07/29/91		
CHEMICAL PARAMETERS	RESULTS	UNITS	L VQ	RESULTS	UNITS	L VQ	RESULTS	UNITS	L VQ
Volatile Organics									
1,2-Dichloropropane	6.000	ug/kg	D U	6.000	ug/kg	D U	5.000	ug/kg	D U
1,4-Dioxane	12900.000	ug/kg	D J	NA			NA		
2-Butanone	13.000	ug/kg	D U	13.000	ug/kg	D R	11.000	ug/kg	D U
2-Chloro-1,3-butadiene	6.440	ug/kg	D U	NA			NA		
2-Hexanone	13.000	ug/kg	D U	13.000	ug/kg	D R	11.000	ug/kg	D U
3-Chloropropene	6.440	ug/kg	D U	NA			NA		
4-Methyl-2-pentanone	13.000	ug/kg	D U	13.000	ug/kg	D R	11.000	ug/kg	D U
Acetone	39.000	ug/kg	D -	93.000	ug/kg	D R	10.000	ug/kg	D U
Acetonitrile	1290.000	ug/kg	D U	NA			NA		
Acrolein	12.900	ug/kg	D U	NA			NA		
Acrylonitrile	12.900	ug/kg	D U	NA			NA		
Benzene	6.000	ug/kg	D U	6.000	ug/kg	D U	5.000	ug/kg	D U
Bromodichloromethane	6.000	ug/kg	D U	6.000	ug/kg	D U	5.000	ug/kg	D U
Bromoform	6.000	ug/kg	D U	6.000	ug/kg	D U	5.000	ug/kg	D U
Bromomethane	13.000	ug/kg	D U	13.000	ug/kg	D U	11.000	ug/kg	D U
Carbon Tetrachloride	6.000	ug/kg	D U	6.000	ug/kg	D U	5.000	ug/kg	D U
Carbon disulfide	6.000	ug/kg	D U	6.000	ug/kg	D U	5.000	ug/kg	D U
Chlorobenzene	6.000	ug/kg	D U	6.000	ug/kg	D U	5.000	ug/kg	D U
Chloroethane	13.000	ug/kg	D U	13.000	ug/kg	D U	11.000	ug/kg	D U
Chloroform	6.000	ug/kg	D U	6.000	ug/kg	D U	5.000	ug/kg	D U
Chloromethane	6.000	ug/kg	D J	13.000	ug/kg	D U	11.000	ug/kg	D U
Dibromochloromethane	6.000	ug/kg	D U	6.000	ug/kg	D U	5.000	ug/kg	D U
Dibromomethane	12.900	ug/kg	D U	NA			NA		
Dichlorodifluoromethane	576.000	ug/kg	D -	NA			NA		
Ethyl cyanide	129.000	ug/kg	D U	NA			NA		
Ethyl methacrylate	12.900	ug/kg	D U	NA			NA		
Ethylbenzene	6.000	ug/kg	D U	6.000	ug/kg	D U	5.000	ug/kg	D U
Iodomethane	6.440	ug/kg	D U	NA			NA		
Isobutyl alcohol	25.800	ug/kg	D U	NA			NA		
Methacrylonitrile	12.900	ug/kg	D U	NA			NA		
Methyl methacrylate	12.900	ug/kg	D U	NA			NA		
Methylene chloride	8.000	ug/kg	D -	17.000	ug/kg	D U	5.000	ug/kg	D U
Pyridine	25.800	ug/kg	D U	NA			NA		
Styrene	6.000	ug/kg	D U	6.000	ug/kg	D U	5.000	ug/kg	D U
Tetrachloroethene	6.000	ug/kg	D U	6.000	ug/kg	D U	5.000	ug/kg	D U
Toluene	6.000	ug/kg	D U	6.000	ug/kg	D U	5.000	ug/kg	D U
Trichloroethene	6.000	ug/kg	D U	6.000	ug/kg	D U	5.000	ug/kg	D U
Trichlorofluoromethane	6.440	ug/kg	D U	NA			NA		
Vinyl Acetate	13.000	ug/kg	D U	13.000	ug/kg	D UJ	11.000	ug/kg	D U
Vinyl chloride	13.000	ug/kg	D U	13.000	ug/kg	D U	11.000	ug/kg	D U
Xylenes, Total	6.000	ug/kg	D U	6.000	ug/kg	D U	5.000	ug/kg	D U
cis-1,3-Dichloropropene	6.000	ug/kg	D U	6.000	ug/kg	D U	5.000	ug/kg	D U

TABLE C-6A
(Continued)

PHASE I - CHEMICAL PARAMETERS

BORING NUMBER	1721			1721			1722		
SAMPLE NUMBER	067234			067237			067250		
	9-10.5			13.5-15			1.5-3		
SAMPLING DATE	07/26/91			07/27/91			07/29/91		
CHEMICAL PARAMETERS	RESULTS	UNITS	L VQ	RESULTS	UNITS	L VQ	RESULTS	UNITS	L VQ
Volatile Organics									
trans-1,3-Dichloropropene	6.000	ug/kg	D U	6.000	ug/kg	D UJ	5.000	ug/kg	D U
trans-1,4-Dichloro-2-butene	129.000	ug/kg	D U	NA			NA		
Semivolatile Organics									
1,2,4,5-Tetrachlorobenzene	440.000	ug/kg	D UJ	NA			NA		
1,2,4-Trichlorobenzene	440.000	ug/kg	D U	430.000	ug/kg	D U	370.000	ug/kg	D U
1,2-Dichlorobenzene	440.000	ug/kg	D U	430.000	ug/kg	D U	370.000	ug/kg	D U
1,3,5-Trinitrobenzene	440.000	ug/kg	D R	NA			NA		
1,3-Dichlorobenzene	440.000	ug/kg	D U	430.000	ug/kg	D U	370.000	ug/kg	D U
1,3-Dinitrobenzene	440.000	ug/kg	D R	NA			NA		
1,4-Dichlorobenzene	440.000	ug/kg	D U	430.000	ug/kg	D U	370.000	ug/kg	D U
1,4-Naphthoquinone	440.000	ug/kg	D UJ	NA			NA		
1-Naphthylamine	5400.000	ug/kg	D UJ	NA			NA		
2,3,4,6-Tetrachlorophenol	440.000	ug/kg	D UJ	NA			NA		
2,4,5-Trichlorophenol	2200.000	ug/kg	D U	2100.000	ug/kg	D U	1800.000	ug/kg	D U
2,4,6-Trichlorophenol	440.000	ug/kg	D U	430.000	ug/kg	D U	370.000	ug/kg	D U
2,4-Dichlorophenol	440.000	ug/kg	D U	430.000	ug/kg	D U	370.000	ug/kg	D U
2,4-Dimethylphenol	440.000	ug/kg	D U	430.000	ug/kg	D U	370.000	ug/kg	D U
2,4-Dinitrophenol	2200.000	ug/kg	D U	2100.000	ug/kg	D U	1800.000	ug/kg	D U
2,4-Dinitrotoluene	440.000	ug/kg	D U	430.000	ug/kg	D U	370.000	ug/kg	D U
2,6-Dichlorophenol	440.000	ug/kg	D UJ	NA			NA		
2,6-Dinitrotoluene	440.000	ug/kg	D U	430.000	ug/kg	D U	370.000	ug/kg	D U
2-Acetylaminofluorene	440.000	ug/kg	D U	NA			NA		
2-Chloronaphthalene	440.000	ug/kg	D U	430.000	ug/kg	D U	370.000	ug/kg	D U
2-Chlorophenol	440.000	ug/kg	D U	430.000	ug/kg	D U	370.000	ug/kg	D U
2-Methylnaphthalene	440.000	ug/kg	D U	430.000	ug/kg	D U	370.000	ug/kg	D U
2-Methylphenol	440.000	ug/kg	D U	430.000	ug/kg	D U	370.000	ug/kg	D U
2-Naphthylamine	7700.000	ug/kg	D UJ	NA			NA		
2-Nitroaniline	2200.000	ug/kg	D U	2100.000	ug/kg	D U	1800.000	ug/kg	D U
2-Nitrophenol	440.000	ug/kg	D U	430.000	ug/kg	D U	370.000	ug/kg	D U
2-Picoline	3100.000	ug/kg	D R	NA			NA		
3,3'-Dichlorobenzidine	890.000	ug/kg	D U	850.000	ug/kg	D UJ	740.000	ug/kg	D UJ
3,3'-Dimethylbenzidine	3600.000	ug/kg	D U	NA			NA		
3-Methylcholanthrene	1300.000	ug/kg	D UJ	NA			NA		
3-Methylphenol	440.000	ug/kg	D R	NA			NA		
3-Nitroaniline	2200.000	ug/kg	D U	2100.000	ug/kg	D UJ	1800.000	ug/kg	D UJ
4,6-Dinitro-2-methylphenol	2200.000	ug/kg	D U	2100.000	ug/kg	D U	1800.000	ug/kg	D U
4-Aminobiphenyl	2200.000	ug/kg	D UJ	NA			NA		
4-Bromophenyl phenyl ether	440.000	ug/kg	D U	430.000	ug/kg	D U	370.000	ug/kg	D U
4-Chloro-3-methylphenol	440.000	ug/kg	D U	430.000	ug/kg	D U	370.000	ug/kg	D U
4-Chlorophenylphenyl ether	440.000	ug/kg	D U	430.000	ug/kg	D U	370.000	ug/kg	D U

000429

TABLE C-6A
(Continued)

PHASE I - CHEMICAL PARAMETERS

BORING NUMBER	1721			1721			1722		
SAMPLE NUMBER	067234			067237			067250		
	9-10.5			13.5-15			1.5-3		
SAMPLING DATE	07/26/91			07/27/91			07/29/91		
CHEMICAL PARAMETERS	RESULTS	UNITS	L VQ	RESULTS	UNITS	L VQ	RESULTS	UNITS	L VQ
Semivolatile Organics									
4-Methylphenol	440.000	ug/kg	D U	430.000	ug/kg	D U	370.000	ug/kg	D U
4-Nitroaniline	2200.000	ug/kg	D U	2100.000	ug/kg	D UJ	1800.000	ug/kg	D UJ
4-Nitrophenol	2200.000	ug/kg	D U	2100.000	ug/kg	D UJ	1800.000	ug/kg	D UJ
4-Nitroquinoline-1-oxide	440.000	ug/kg	D R	NA			NA		
5-Nitro-o-toluidine	900.000	ug/kg	D UJ	NA			NA		
7,12-Dimethylbenz(a)anthracene	900.000	ug/kg	D UJ	NA			NA		
Acenaphthene	440.000	ug/kg	D U	430.000	ug/kg	D U	370.000	ug/kg	D U
Acenaphthylene	440.000	ug/kg	D U	430.000	ug/kg	D U	370.000	ug/kg	D U
Acetophenone	440.000	ug/kg	D UJ	NA			NA		
Aniline	2300.000	ug/kg	D U	NA			NA		
Anthracene	440.000	ug/kg	D U	430.000	ug/kg	D U	370.000	ug/kg	D U
Aramite	440.000	ug/kg	D R	NA			NA		
Benzo(a)anthracene	440.000	ug/kg	D U	430.000	ug/kg	D U	370.000	ug/kg	D U
Benzo(a)pyrene	440.000	ug/kg	D U	430.000	ug/kg	D U	370.000	ug/kg	D U
Benzo(b)fluoranthene	440.000	ug/kg	D U	430.000	ug/kg	D U	370.000	ug/kg	D U
Benzo(g,h,i)perylene	440.000	ug/kg	D U	430.000	ug/kg	D UJ	370.000	ug/kg	D UJ
Benzo(k)fluoranthene	440.000	ug/kg	D U	430.000	ug/kg	D U	370.000	ug/kg	D U
Benzoic acid	2200.000	ug/kg	D U	2100.000	ug/kg	D UJ	1800.000	ug/kg	D UJ
Benzyl alcohol	440.000	ug/kg	D U	430.000	ug/kg	D U	370.000	ug/kg	D U
Butyl benzyl phthalate	440.000	ug/kg	D U	430.000	ug/kg	D U	370.000	ug/kg	D U
Chrysene	440.000	ug/kg	D U	430.000	ug/kg	D U	370.000	ug/kg	D U
Di-n-butyl phthalate	440.000	ug/kg	D U	430.000	ug/kg	D U	370.000	ug/kg	D U
Di-n-octyl phthalate	440.000	ug/kg	D U	430.000	ug/kg	D U	370.000	ug/kg	D U
Diallate	440.000	ug/kg	D UJ	NA			NA		
Dibenzo(a,h)anthracene	440.000	ug/kg	D U	430.000	ug/kg	D U	370.000	ug/kg	D U
Dibenzofuran	440.000	ug/kg	D U	430.000	ug/kg	D U	370.000	ug/kg	D U
Diethyl phthalate	440.000	ug/kg	D U	430.000	ug/kg	D U	370.000	ug/kg	D U
Dimethyl phthalate	440.000	ug/kg	D U	430.000	ug/kg	D U	370.000	ug/kg	D U
Diphenylamine	440.000	ug/kg	D UJ	NA			NA		
Ethyl methanesulfonate	440.000	ug/kg	D R	NA			NA		
Fluoranthene	440.000	ug/kg	D U	430.000	ug/kg	D U	370.000	ug/kg	D U
Fluorene	440.000	ug/kg	D U	430.000	ug/kg	D U	370.000	ug/kg	D U
Hexachlorobenzene	440.000	ug/kg	D U	430.000	ug/kg	D U	370.000	ug/kg	D U
Hexachlorobutadiene	440.000	ug/kg	D U	430.000	ug/kg	D U	370.000	ug/kg	D U
Hexachlorocyclopentadiene	440.000	ug/kg	D U	430.000	ug/kg	D U	370.000	ug/kg	D U
Hexachloroethane	440.000	ug/kg	D U	430.000	ug/kg	D UJ	370.000	ug/kg	D UJ
Hexachlorophene	2300.000	ug/kg	D UJ	NA			NA		
Hexachloropropene	900.000	ug/kg	D R	NA			NA		
Indeno(1,2,3-cd)pyrene	440.000	ug/kg	D U	430.000	ug/kg	D U	370.000	ug/kg	D U
Isophorone	440.000	ug/kg	D U	430.000	ug/kg	D U	370.000	ug/kg	D U
Isosafrole	440.000	ug/kg	D UJ	NA			NA		
Methapyrilene	1800.000	ug/kg	D R	NA			NA		

TABLE C-6A
(Continued)

PHASE I - CHEMICAL PARAMETERS

BORING NUMBER	1721			1721			1722		
SAMPLE NUMBER	067234			067237			067250		
	9-10.5			13.5-15			1.5-3		
SAMPLING DATE	07/26/91			07/27/91			07/29/91		
CHEMICAL PARAMETERS	RESULTS	UNITS	L VQ	RESULTS	UNITS	L VQ	RESULTS	UNITS	L VQ
Semivolatile Organics									
Methyl methanesulfonate	440.000	ug/kg	D UJ	NA			NA		
Methyl parathion	100.000	ug/kg	C U	100.000	ug/kg	C U	100.000	ug/kg	C U
N-Nitroso-di-n-propylamine	440.000	ug/kg	D U	430.000	ug/kg	D U	370.000	ug/kg	D U
N-Nitrosodi-n-butylamine	900.000	ug/kg	D R	NA			NA		
N-Nitrosodiethylamine	440.000	ug/kg	D R	NA			NA		
N-Nitrosodimethylamine	440.000	ug/kg	D R	NA			NA		
N-Nitrosodiphenylamine	440.000	ug/kg	D U	430.000	ug/kg	D U	370.000	ug/kg	D U
N-Nitrosomethylethylamine	440.000	ug/kg	D R	NA			NA		
N-Nitrosomorpholine	440.000	ug/kg	D R	NA			NA		
N-Nitrosopiperidine	440.000	ug/kg	D R	NA			NA		
N-Nitrosopyrrolidine	440.000	ug/kg	D R	NA			NA		
Naphthalene	440.000	ug/kg	D U	430.000	ug/kg	D U	370.000	ug/kg	D U
Nitrobenzene	440.000	ug/kg	D U	430.000	ug/kg	D U	370.000	ug/kg	D U
O,O,O-Triethylphosphorothioate	440.000	ug/kg	D UJ	100.000	ug/kg	D U	100.000	ug/kg	D U
Parathion	100.000	ug/kg	C U	100.000	ug/kg	C U	100.000	ug/kg	C U
Pentachlorobenzene	900.000	ug/kg	D UJ	NA			NA		
Pentachloroethane	900.000	ug/kg	D UJ	NA			NA		
Pentachloronitrobenzene	900.000	ug/kg	D UJ	NA			NA		
Pentachlorophenol	2200.000	ug/kg	D U	2100.000	ug/kg	D U	1800.000	ug/kg	D U
Phenacetin	440.000	ug/kg	D UJ	NA			NA		
Phenanthrene	440.000	ug/kg	D U	430.000	ug/kg	D U	370.000	ug/kg	D U
Phenol	440.000	ug/kg	D U	430.000	ug/kg	D U	370.000	ug/kg	D U
Pronamide	1300.000	ug/kg	D UJ	NA			NA		
Pyrene	440.000	ug/kg	D U	430.000	ug/kg	D U	370.000	ug/kg	D U
Safrole	440.000	ug/kg	D UJ	NA			NA		
Sulfotep	440.000	ug/kg	D R	100.000	ug/kg	C U	100.000	ug/kg	C U
a,a-Dimethylphenethylamine	440.000	ug/kg	D UJ	NA			NA		
bis(2-Chloroethoxy)methane	440.000	ug/kg	D U	430.000	ug/kg	D U	370.000	ug/kg	D U
bis(2-Chloroethyl)ether	440.000	ug/kg	D U	430.000	ug/kg	D U	370.000	ug/kg	D U
bis(2-Chloroisopropyl) ether	440.000	ug/kg	D U	430.000	ug/kg	D UJ	370.000	ug/kg	D UJ
bis(2-Ethylhexyl) phthalate	440.000	ug/kg	D U	430.000	ug/kg	D U	370.000	ug/kg	D U
o-Toluidine	440.000	ug/kg	D UJ	NA			NA		
p-Chloroaniline	440.000	ug/kg	D U	430.000	ug/kg	D UJ	370.000	ug/kg	D UJ
p-Dimethylaminoazobenzene	1300.000	ug/kg	D UJ	NA			NA		
p-Phenylenediamine	2200.000	ug/kg	D R	NA			NA		
Herbicide Organics									
2,4,5-T	50.000	ug/kg	D U	NA			NA		
2,4,5-TP (Silvex)	46.000	ug/kg	D U	NA			NA		
2,4-D	250.000	ug/kg	D U	NA			NA		
Dinoseb	900.000	ug/kg	D R	NA			NA		

000131

TABLE C-6A
(Continued)

PHASE I - CHEMICAL PARAMETERS

BORING NUMBER	1721				1721				1722			
SAMPLE NUMBER	067234				067237				067250			
	9-10.5				13.5-15				1.5-3			
SAMPLING DATE	07/26/91				07/27/91				07/29/91			
CHEMICAL PARAMETERS	RESULTS	UNITS	L	VQ	RESULTS	UNITS	L	VQ	RESULTS	UNITS	L	VQ
Pesticide Organics/PCBs												
4,4'-DDD	21.000	ug/kg	D	U	21.000	ug/kg	D	U	18.000	ug/kg	D	U
4,4'-DDE	21.000	ug/kg	D	U	21.000	ug/kg	D	U	18.000	ug/kg	D	U
4,4'-DDT	21.000	ug/kg	D	UJ	21.000	ug/kg	D	U	18.000	ug/kg	D	U
Aldrin	11.000	ug/kg	D	UJ	10.000	ug/kg	D	U	9.100	ug/kg	D	U
Aroclor-1016	110.000	ug/kg	D	U	100.000	ug/kg	D	U	91.000	ug/kg	D	U
Aroclor-1221	110.000	ug/kg	D	U	100.000	ug/kg	D	U	91.000	ug/kg	D	U
Aroclor-1232	110.000	ug/kg	D	U	100.000	ug/kg	D	U	91.000	ug/kg	D	U
Aroclor-1242	110.000	ug/kg	D	U	100.000	ug/kg	D	U	91.000	ug/kg	D	U
Aroclor-1248	110.000	ug/kg	D	U	100.000	ug/kg	D	U	91.000	ug/kg	D	U
Aroclor-1254	210.000	ug/kg	D	U	210.000	ug/kg	D	U	180.000	ug/kg	D	U
Aroclor-1260	610.000	ug/kg	D	-	210.000	ug/kg	D	U	180.000	ug/kg	D	U
Azinphosmethyl	1000.000	ug/kg	C	U	1000.000	ug/kg	C	U	200.000	ug/kg	C	U
Chlorobenzilate	21.000	ug/kg	D	U	NA				NA			
Demeton	200.000	ug/kg	C	U	200.000	ug/kg	C	U	200.000	ug/kg	C	U
Diazinon	100.000	ug/kg	C	U	100.000	ug/kg	C	U	100.000	ug/kg	C	U
Dieldrin	21.000	ug/kg	D	UJ	21.000	ug/kg	D	U	18.000	ug/kg	D	U
Dimethoate	100.000	ug/kg	C	U	100.000	ug/kg	C	U	100.000	ug/kg	C	U
Disulfoton	100.000	ug/kg	C	U	100.000	ug/kg	C	U	100.000	ug/kg	C	U
Endosulfan II	21.000	ug/kg	D	U	21.000	ug/kg	D	U	18.000	ug/kg	D	U
Endosulfan sulfate	21.000	ug/kg	D	U	21.000	ug/kg	D	U	18.000	ug/kg	D	U
Endosulfan-I	11.000	ug/kg	D	U	10.000	ug/kg	D	U	9.100	ug/kg	D	U
Endrin	21.000	ug/kg	D	U	21.000	ug/kg	D	U	18.000	ug/kg	D	U
Endrin ketone	21.000	ug/kg	D	U	21.000	ug/kg	D	U	18.000	ug/kg	D	U
Ethion	NA				100.000	ug/kg	C	U	100.000	ug/kg	C	U
Famphur	100.000	ug/kg	C	U	100.000	ug/kg	C	U	100.000	ug/kg	C	U
Heptachlor	11.000	ug/kg	D	U	10.000	ug/kg	D	U	9.100	ug/kg	D	U
Heptachlor epoxide	11.000	ug/kg	D	U	10.000	ug/kg	D	U	9.100	ug/kg	D	U
Isodrin	11.000	ug/kg	D	U	NA				NA			
Kepone	21.000	ug/kg	D	U	NA				NA			
Malathion	100.000	ug/kg	C	U	100.000	ug/kg	C	U	100.000	ug/kg	C	U
Methoxychlor	110.000	ug/kg	D	U	100.000	ug/kg	D	U	91.000	ug/kg	D	U
Phorate	100.000	ug/kg	C	U	100.000	ug/kg	C	U	100.000	ug/kg	C	U
Tetraethylpyrophosphate	400.000	ug/kg	C	U	400.000	ug/kg	C	U	400.000	ug/kg	C	U
Thionazin	100.000	ug/kg	C	U	100.000	ug/kg	C	U	100.000	ug/kg	C	U
Toxaphene	210.000	ug/kg	D	U	210.000	ug/kg	D	U	180.000	ug/kg	D	U
alpha-BHC	11.000	ug/kg	D	U	10.000	ug/kg	D	U	9.100	ug/kg	D	U
alpha-Chlordane	110.000	ug/kg	D	U	100.000	ug/kg	D	U	91.000	ug/kg	D	U
beta-BHC	11.000	ug/kg	D	U	10.000	ug/kg	D	U	9.100	ug/kg	D	U
delta-BHC	11.000	ug/kg	D	U	10.000	ug/kg	D	U	9.100	ug/kg	D	U
gamma-BHC (Lindane)	11.000	ug/kg	D	U	10.000	ug/kg	D	U	9.100	ug/kg	D	U
gamma-Chlordane	110.000	ug/kg	D	U	100.000	ug/kg	D	U	91.000	ug/kg	D	U
Dioxin Furan												
1,2,3,4,6,7,8-Heptachlorodibenzo-p-dioxin	0.037	ug/kg	E	U	0.013	ug/kg	E	U	0.018	ug/kg	E	U

000432

6508

TABLE C-6A
(Continued)

PHASE I - CHEMICAL PARAMETERS

BORING NUMBER	1721				1721				1722			
SAMPLE NUMBER	067234				067237				067250			
	9-10.5				13.5-15				1.5-3			
SAMPLING DATE	07/26/91				07/27/91				07/29/91			
CHEMICAL PARAMETERS	RESULTS	UNITS	L	VQ	RESULTS	UNITS	L	VQ	RESULTS	UNITS	L	VQ
Dioxin Furan												
1,2,3,4,6,7,8-Heptachlorodibenzofuran	0.015	ug/kg	E	U	0.021	ug/kg	E	U	0.037	ug/kg	E	U
1,2,3,4,7,8,9-Heptachlorodibenzofuran	0.019	ug/kg	E	U	0.026	ug/kg	E	U	0.047	ug/kg	E	U
1,2,3,4,7,8-Hexachlorodibenzo-p-dioxin	0.076	ug/kg	E	U	0.019	ug/kg	E	U	0.033	ug/kg	E	U
1,2,3,4,7,8-Hexachlorodibenzofuran	0.014	ug/kg	E	U	0.015	ug/kg	E	U	0.010	ug/kg	E	U
1,2,3,6,7,8-Hexachlorodibenzo-p-dioxin	0.060	ug/kg	E	U	0.015	ug/kg	E	U	0.026	ug/kg	E	U
1,2,3,6,7,8-Hexachlorodibenzofuran	0.013	ug/kg	E	U	0.014	ug/kg	E	U	0.010	ug/kg	E	U
1,2,3,7,8,9-Hexachlorodibenzo-p-dioxin	0.063	ug/kg	E	U	0.016	ug/kg	E	U	0.027	ug/kg	E	U
1,2,3,7,8,9-Hexachlorodibenzofuran	0.016	ug/kg	E	U	0.017	ug/kg	E	U	0.012	ug/kg	E	U
1,2,3,7,8-Pentachlorodibenzo-p-dioxin	0.140	ug/kg	E	U	0.056	ug/kg	E	U	0.094	ug/kg	E	U
1,2,3,7,8-Pentachlorodibenzofuran	0.049	ug/kg	E	U	0.011	ug/kg	E	U	0.013	ug/kg	E	U
2,3,4,6,7,8-Hexachlorodibenzofuran	0.016	ug/kg	E	U	0.017	ug/kg	E	U	0.012	ug/kg	E	U
2,3,4,7,8-Pentachlorodibenzofuran	0.047	ug/kg	E	U	0.011	ug/kg	E	U	0.013	ug/kg	E	U
2,3,7,8-TCDD	0.120	ug/kg	E	U	0.065	ug/kg	E	U	0.051	ug/kg	E	U
2,3,7,8-TCDF	0.110	ug/kg	E	U	0.037	ug/kg	E	U	0.039	ug/kg	E	U
Heptachlorodibenzo-p-dioxin	0.037	ug/kg	E	U	0.013	ug/kg	E	U	0.018	ug/kg	E	U
Heptachlorodibenzofuran	0.016	ug/kg	E	U	0.023	ug/kg	E	U	0.042	ug/kg	E	U
Hexachlorodibenzo-p-dioxin	0.066	ug/kg	E	U	0.017	ug/kg	E	U	0.028	ug/kg	E	U
Hexachlorodibenzofuran	0.014	ug/kg	E	U	0.016	ug/kg	E	U	0.011	ug/kg	E	U
Octachlorodibenzo-p-dioxin	0.310	ug/kg	E	J	0.050	ug/kg	E	J	0.055	ug/kg	E	J
Octachlorodibenzofuran	0.120	ug/kg	E	UJ	0.039	ug/kg	E	UJ	0.013	ug/kg	E	UJ
Pentachlorodibenzo-p-dioxin	0.140	ug/kg	E	U	0.056	ug/kg	E	U	0.094	ug/kg	E	U
Pentachlorodibenzofuran	0.048	ug/kg	E	UJ	0.011	ug/kg	E	U	0.013	ug/kg	E	U
Tetrachlorodibenzo-p-dioxin	0.022	ug/kg	E	U	0.032	ug/kg	E	U	0.013	ug/kg	E	U
Tetrachlorodibenzofuran	0.007	ug/kg	E	U	0.019	ug/kg	E	U	0.015	ug/kg	E	U
General Chemistry												
Sulfide	12.700	mg/kg	C	-	NA				NA			

000133

TABLE C-6A
(Continued)

PHASE I - CHEMICAL PARAMETERS

BORING NUMBER	1722			1808			1808		
SAMPLE NUMBER	067259			067394			067395		
	14-16.5			3-4.5			4.5-6		
SAMPLING DATE	07/30/91			08/27/91			08/27/91		
CHEMICAL PARAMETERS	RESULTS	UNITS	L VQ	RESULTS	UNITS	L VQ	RESULTS	UNITS	L VQ
Inorganics									
Aluminum	8420.000	mg/kg	D -	9850.000	mg/kg	D -	NA		
Antimony	7.700	mg/kg	D UJ	10.600	mg/kg	D J	NA		
Arsenic	6.100	mg/kg	D -	5.000	mg/kg	D -	NA		
Barium	90.200	mg/kg	D J	78.600	mg/kg	D -	NA		
Beryllium	0.630	mg/kg	D -	0.710	mg/kg	D -	NA		
Boron	26.600	mg/kg	D J	22.100	mg/kg	D UJ	NA		
Cadmium	2.300	mg/kg	D -	2.100	mg/kg	D -	NA		
Calcium	79500.000	mg/kg	D J	52700.000	mg/kg	D -	NA		
Chromium	23.400	mg/kg	D J	25.300	mg/kg	D -	NA		
Cobalt	12.700	mg/kg	D -	11.800	mg/kg	D -	NA		
Copper	22.200	mg/kg	D -	17.600	mg/kg	D -	NA		
Cyanide	0.500	mg/kg	D -	0.110	mg/kg	D U	NA		
Iron	22200.000	mg/kg	D J	17000.000	mg/kg	D -	NA		
Lead	10.100	mg/kg	D -	13.300	mg/kg	D -	NA		
Magnesium	27900.000	mg/kg	D J	14300.000	mg/kg	D -	NA		
Manganese	826.000	mg/kg	D J	422.000	mg/kg	D J	NA		
Mercury	0.130	mg/kg	D U	0.100	mg/kg	D UJ	NA		
Molybdenum	11.200	mg/kg	D -	11.700	mg/kg	D -	NA		
Nickel	30.200	mg/kg	D J	19.900	mg/kg	D -	NA		
Potassium	960.000	mg/kg	D -	976.000	mg/kg	D -	NA		
Selenium	0.510	mg/kg	D U	0.440	mg/kg	D U	NA		
Silicon	701.000	mg/kg	D J	815.000	mg/kg	D -	NA		
Silver	10.200	mg/kg	D -	11.000	mg/kg	D -	NA		
Sodium	126.000	mg/kg	D -	109.000	mg/kg	D -	NA		
Thallium	0.510	mg/kg	D U	0.440	mg/kg	D UJ	NA		
Tin	NA			44.300	mg/kg	D U	NA		
Vanadium	26.100	mg/kg	D -	28.400	mg/kg	D -	NA		
Zinc	46.900	mg/kg	D -	50.400	mg/kg	D -	NA		
Volatile Organics									
1,1,1-Trichloroethane	6.000	ug/kg	D U	5.000	ug/kg	D UJ	NA		
1,1,2,2-Tetrachloroethane	6.000	ug/kg	D U	5.000	ug/kg	D UJ	NA		
1,1,2-Trichloroethane	6.000	ug/kg	D U	5.000	ug/kg	D UJ	NA		
1,1-Dichloroethane	6.000	ug/kg	D U	5.000	ug/kg	D UJ	NA		
1,1-Dichloroethene	6.000	ug/kg	D U	5.000	ug/kg	D UJ	NA		
1,2-Dichloroethane	6.000	ug/kg	D U	5.000	ug/kg	D UJ	NA		
1,2-Dichloroethene	6.000	ug/kg	D U	5.000	ug/kg	D UJ	NA		
1,2-Dichloropropane	6.000	ug/kg	D U	5.000	ug/kg	D UJ	NA		
2-Butanone	3.000	ug/kg	D J	11.000	ug/kg	D UJ	NA		
2-Hexanone	13.000	ug/kg	D U	11.000	ug/kg	D UJ	NA		
4-Methyl-2-pentanone	13.000	ug/kg	D U	11.000	ug/kg	D UJ	NA		

000134

6508

TABLE C-6A
(Continued)

PHASE I - CHEMICAL PARAMETERS

BORING NUMBER	1722				1808				1808			
SAMPLE NUMBER	067259				067394				067395			
	14-16.5				3-4.5				4.5-6			
SAMPLING DATE	07/30/91				08/27/91				08/27/91			
CHEMICAL PARAMETERS	RESULTS	UNITS	L	VQ	RESULTS	UNITS	L	VQ	RESULTS	UNITS	L	VQ
Volatile Organics												
Acetone	26.000	ug/kg	D	U	11.000	ug/kg	D	UJ	NA			
Benzene	6.000	ug/kg	D	U	5.000	ug/kg	D	UJ	NA			
Bromodichloromethane	6.000	ug/kg	D	U	5.000	ug/kg	D	UJ	NA			
Bromoform	6.000	ug/kg	D	U	5.000	ug/kg	D	UJ	NA			
Bromomethane	13.000	ug/kg	D	U	11.000	ug/kg	D	UJ	NA			
Carbon Tetrachloride	6.000	ug/kg	D	U	5.000	ug/kg	D	UJ	NA			
Carbon disulfide	6.000	ug/kg	D	U	5.000	ug/kg	D	UJ	NA			
Chlorobenzene	6.000	ug/kg	D	U	5.000	ug/kg	D	UJ	NA			
Chloroethane	13.000	ug/kg	D	U	11.000	ug/kg	D	UJ	NA			
Chloroform	6.000	ug/kg	D	U	5.000	ug/kg	D	UJ	NA			
Chloromethane	13.000	ug/kg	D	U	11.000	ug/kg	D	UJ	NA			
Dibromochloromethane	6.000	ug/kg	D	U	5.000	ug/kg	D	UJ	NA			
Ethylbenzene	6.000	ug/kg	D	U	5.000	ug/kg	D	UJ	NA			
Methylene chloride	6.000	ug/kg	D	U	12.000	ug/kg	D	UJ	NA			
Styrene	6.000	ug/kg	D	U	5.000	ug/kg	D	UJ	NA			
Tetrachloroethene	6.000	ug/kg	D	U	30.000	ug/kg	D	J	NA			
Toluene	6.000	ug/kg	D	U	5.000	ug/kg	D	UJ	NA			
Trichloroethene	6.000	ug/kg	D	U	5.000	ug/kg	D	UJ	NA			
Vinyl Acetate	13.000	ug/kg	D	U	11.000	ug/kg	D	UJ	NA			
Vinyl chloride	13.000	ug/kg	D	U	11.000	ug/kg	D	UJ	NA			
Xylenes, Total	6.000	ug/kg	D	U	5.000	ug/kg	D	UJ	NA			
cis-1,3-Dichloropropene	6.000	ug/kg	D	U	5.000	ug/kg	D	UJ	NA			
trans-1,3-Dichloropropene	6.000	ug/kg	D	U	5.000	ug/kg	D	UJ	NA			
Semivolatile Organics												
1,2,4-Trichlorobenzene	430.000	ug/kg	D	U	360.000	ug/kg	D	UJ	NA			
1,2-Dichlorobenzene	430.000	ug/kg	D	U	360.000	ug/kg	D	UJ	NA			
1,3-Dichlorobenzene	430.000	ug/kg	D	U	360.000	ug/kg	D	UJ	NA			
1,4-Dichlorobenzene	430.000	ug/kg	D	U	360.000	ug/kg	D	UJ	NA			
2,4,5-Trichlorophenol	2100.000	ug/kg	D	U	1800.000	ug/kg	D	U	NA			
2,4,6-Trichlorophenol	430.000	ug/kg	D	U	360.000	ug/kg	D	U	NA			
2,4-Dichlorophenol	430.000	ug/kg	D	U	360.000	ug/kg	D	U	NA			
2,4-Dimethylphenol	430.000	ug/kg	D	U	360.000	ug/kg	D	U	NA			
2,4-Dinitrophenol	2100.000	ug/kg	D	U	1800.000	ug/kg	D	UJ	NA			
2,4-Dinitrotoluene	430.000	ug/kg	D	U	360.000	ug/kg	D	UJ	NA			
2,6-Dinitrotoluene	430.000	ug/kg	D	U	360.000	ug/kg	D	UJ	NA			
2-Chloronaphthalene	430.000	ug/kg	D	U	360.000	ug/kg	D	UJ	NA			
2-Chlorophenol	430.000	ug/kg	D	U	360.000	ug/kg	D	U	NA			
2-Methylnaphthalene	430.000	ug/kg	D	U	360.000	ug/kg	D	UJ	NA			
2-Methylphenol	430.000	ug/kg	D	U	360.000	ug/kg	D	U	NA			
2-Nitroaniline	2100.000	ug/kg	D	U	1800.000	ug/kg	D	UJ	NA			

TABLE C-6A
(Continued)

PHASE I - CHEMICAL PARAMETERS

BORING NUMBER	1722				1808				1808			
SAMPLE NUMBER	067259				067394				067395			
	14-16.5				3-4.5				4.5-6			
SAMPLING DATE	07/30/91				08/27/91				08/27/91			
CHEMICAL PARAMETERS	RESULTS	UNITS	L	VQ	RESULTS	UNITS	L	VQ	RESULTS	UNITS	L	VQ
Semivolatile Organics												
2-Nitrophenol	430.000	ug/kg	D	U	360.000	ug/kg	D	U	NA			
3,3'-Dichlorobenzidine	850.000	ug/kg	D	UJ	730.000	ug/kg	D	UJ	NA			
3-Nitroaniline	2100.000	ug/kg	D	UJ	1800.000	ug/kg	D	UJ	NA			
4,6-Dinitro-2-methylphenol	2100.000	ug/kg	D	U	1800.000	ug/kg	D	U	NA			
4-Bromophenyl phenyl ether	430.000	ug/kg	D	U	360.000	ug/kg	D	UJ	NA			
4-Chloro-3-methylphenol	430.000	ug/kg	D	U	360.000	ug/kg	D	U	NA			
4-Chlorophenylphenyl ether	430.000	ug/kg	D	U	360.000	ug/kg	D	UJ	NA			
4-Methylphenol	430.000	ug/kg	D	U	360.000	ug/kg	D	U	NA			
4-Nitroaniline	2100.000	ug/kg	D	UJ	1800.000	ug/kg	D	UJ	NA			
4-Nitrophenol	2100.000	ug/kg	D	UJ	1800.000	ug/kg	D	U	NA			
Acenaphthene	430.000	ug/kg	D	U	250.000	ug/kg	D	J	NA			
Acenaphthylene	430.000	ug/kg	D	U	360.000	ug/kg	D	UJ	NA			
Anthracene	430.000	ug/kg	D	U	270.000	ug/kg	D	J	NA			
Benzo(a)anthracene	430.000	ug/kg	D	U	910.000	ug/kg	D	J	NA			
Benzo(a)pyrene	430.000	ug/kg	D	U	700.000	ug/kg	D	J	NA			
Benzo(b)fluoranthene	430.000	ug/kg	D	U	1500.000	ug/kg	D	J	NA			
Benzo(g,h,i)perylene	430.000	ug/kg	D	U	490.000	ug/kg	D	J	NA			
Benzo(k)fluoranthene	430.000	ug/kg	D	U	360.000	ug/kg	D	UJ	NA			
Benzoic acid	2100.000	ug/kg	D	UJ	1800.000	ug/kg	D	UJ	NA			
Benzyl alcohol	430.000	ug/kg	D	U	360.000	ug/kg	D	UJ	NA			
Butyl benzyl phthalate	430.000	ug/kg	D	U	360.000	ug/kg	D	UJ	NA			
Chrysene	430.000	ug/kg	D	U	1100.000	ug/kg	D	J	NA			
Di-n-butyl phthalate	430.000	ug/kg	D	U	360.000	ug/kg	D	UJ	NA			
Di-n-octyl phthalate	430.000	ug/kg	D	U	360.000	ug/kg	D	UJ	NA			
Dibenzo(a,h)anthracene	430.000	ug/kg	D	U	92.000	ug/kg	D	J	NA			
Dibenzofuran	430.000	ug/kg	D	U	160.000	ug/kg	D	J	NA			
Diethyl phthalate	430.000	ug/kg	D	U	360.000	ug/kg	D	UJ	NA			
Dimethyl phthalate	430.000	ug/kg	D	U	360.000	ug/kg	D	UJ	NA			
Fluoranthene	430.000	ug/kg	D	U	2200.000	ug/kg	D	J	NA			
Fluorene	430.000	ug/kg	D	U	250.000	ug/kg	D	J	NA			
Hexachlorobenzene	430.000	ug/kg	D	U	360.000	ug/kg	D	UJ	NA			
Hexachlorobutadiene	430.000	ug/kg	D	U	360.000	ug/kg	D	UJ	NA			
Hexachlorocyclopentadiene	430.000	ug/kg	D	U	360.000	ug/kg	D	UJ	NA			
Hexachloroethane	430.000	ug/kg	D	UJ	360.000	ug/kg	D	UJ	NA			
Indeno(1,2,3-cd)pyrene	430.000	ug/kg	D	U	440.000	ug/kg	D	J	NA			
Isophorone	430.000	ug/kg	D	U	360.000	ug/kg	D	UJ	NA			
Methyl parathion	100.000	ug/kg	C	U	100.000	ug/kg	C	U	NA			
N-Nitroso-di-n-propylamine	430.000	ug/kg	D	U	360.000	ug/kg	D	UJ	NA			
N-Nitrosodiphenylamine	430.000	ug/kg	D	U	360.000	ug/kg	D	UJ	NA			
Naphthalene	430.000	ug/kg	D	U	41.000	ug/kg	D	J	NA			
Nitrobenzene	430.000	ug/kg	D	U	360.000	ug/kg	D	UJ	NA			
O,O,O-Triethylphosphorothioate	100.000	ug/kg	D	U	100.000	ug/kg	D	U	NA			

TABLE C-6A
(Continued)

PHASE I - CHEMICAL PARAMETERS

BORING NUMBER	1722				1808				1808			
SAMPLE NUMBER	067259				067394				067395			
	14-16.5				3-4.5				4.5-6			
SAMPLING DATE	07/30/91				08/27/91				08/27/91			
CHEMICAL PARAMETERS	RESULTS	UNITS	L	VQ	RESULTS	UNITS	L	VQ	RESULTS	UNITS	L	VQ
Semivolatile Organics												
Parathion	100.000	ug/kg	C	U	100.000	ug/kg	C	U	NA			
Pentachlorophenol	2100.000	ug/kg	D	U	1800.000	ug/kg	D	U	NA			
Phenanthrene	430.000	ug/kg	D	U	1900.000	ug/kg	D	J	NA			
Phenol	430.000	ug/kg	D	U	360.000	ug/kg	D	U	NA			
Pyrene	430.000	ug/kg	D	U	1800.000	ug/kg	D	J	NA			
Sulfotep	100.000	ug/kg	C	U	100.000	ug/kg	C	U	NA			
bis(2-Chloroethoxy)methane	430.000	ug/kg	D	U	360.000	ug/kg	D	UJ	NA			
bis(2-Chloroethyl)ether	430.000	ug/kg	D	U	360.000	ug/kg	D	UJ	NA			
bis(2-Chloroisopropyl) ether	430.000	ug/kg	D	U	360.000	ug/kg	D	UJ	NA			
bis(2-Ethylhexyl) phthalate	430.000	ug/kg	D	U	360.000	ug/kg	D	UJ	NA			
p-Chloroaniline	430.000	ug/kg	D	UJ	360.000	ug/kg	D	UJ	NA			
Pesticide Organics/PCBs												
4,4'-DDD	21.000	ug/kg	D	U	18.000	ug/kg	D	U	NA			
4,4'-DDE	21.000	ug/kg	D	U	18.000	ug/kg	D	U	NA			
4,4'-DDT	21.000	ug/kg	D	U	18.000	ug/kg	D	U	NA			
Aldrin	10.000	ug/kg	D	U	8.900	ug/kg	D	U	NA			
Aroclor-1016	100.000	ug/kg	D	U	89.000	ug/kg	D	U	NA			
Aroclor-1221	100.000	ug/kg	D	U	89.000	ug/kg	D	U	NA			
Aroclor-1232	100.000	ug/kg	D	U	89.000	ug/kg	D	U	NA			
Aroclor-1242	100.000	ug/kg	D	U	89.000	ug/kg	D	U	NA			
Aroclor-1248	100.000	ug/kg	D	U	89.000	ug/kg	D	U	NA			
Aroclor-1254	210.000	ug/kg	D	U	150.000	ug/kg	D	J	NA			
Aroclor-1260	210.000	ug/kg	D	U	180.000	ug/kg	D	U	NA			
Azinphosmethyl	200.000	ug/kg	C	U	100.000	ug/kg	C	U	NA			
Demeton	200.000	ug/kg	C	U	200.000	ug/kg	C	U	NA			
Diazinon	100.000	ug/kg	C	U	100.000	ug/kg	C	U	NA			
Dieldrin	21.000	ug/kg	D	U	18.000	ug/kg	D	U	NA			
Dimethoate	100.000	ug/kg	C	U	100.000	ug/kg	C	U	NA			
Disulfoton	100.000	ug/kg	C	U	100.000	ug/kg	C	U	NA			
Endosulfan II	21.000	ug/kg	D	U	18.000	ug/kg	D	U	NA			
Endosulfan sulfate	21.000	ug/kg	D	U	18.000	ug/kg	D	U	NA			
Endosulfan-I	10.000	ug/kg	D	U	8.900	ug/kg	D	U	NA			
Endrin	21.000	ug/kg	D	U	18.000	ug/kg	D	U	NA			
Endrin ketone	21.000	ug/kg	D	U	18.000	ug/kg	D	U	NA			
Ethion	100.000	ug/kg	C	U	100.000	ug/kg	C	U	NA			
Famphur	100.000	ug/kg	C	U	100.000	ug/kg	C	U	NA			
Heptachlor	10.000	ug/kg	D	U	8.900	ug/kg	D	U	NA			
Heptachlor epoxide	10.000	ug/kg	D	U	8.900	ug/kg	D	U	NA			
Malathion	100.000	ug/kg	C	U	100.000	ug/kg	C	U	NA			
Methoxychlor	100.000	ug/kg	D	U	89.000	ug/kg	D	U	NA			

000137

TABLE C-6A
(Continued)

PHASE I - CHEMICAL PARAMETERS

BORING NUMBER	1722				1808				1808			
SAMPLE NUMBER	067259				067394				067395			
	14-16.5				3-4.5				4.5-6			
SAMPLING DATE	07/30/91				08/27/91				08/27/91			
CHEMICAL PARAMETERS	RESULTS	UNITS	L	VQ	RESULTS	UNITS	L	VQ	RESULTS	UNITS	L	VQ
Pesticide Organics/PCBs												
Phorate	100.000	ug/kg	C	U	100.000	ug/kg	C	U	NA			
Tetraethylpyrophosphate	400.000	ug/kg	C	U	400.000	ug/kg	C	U	NA			
Thionazin	100.000	ug/kg	C	U	100.000	ug/kg	C	U	NA			
Toxaphene	210.000	ug/kg	D	U	180.000	ug/kg	D	U	NA			
alpha-BHC	10.000	ug/kg	D	U	8.900	ug/kg	D	U	NA			
alpha-Chlordane	100.000	ug/kg	D	U	89.000	ug/kg	D	U	NA			
beta-BHC	10.000	ug/kg	D	U	8.900	ug/kg	D	U	NA			
delta-BHC	10.000	ug/kg	D	U	8.900	ug/kg	D	U	NA			
gamma-BHC (Lindane)	10.000	ug/kg	D	U	8.900	ug/kg	D	U	NA			
gamma-Chlordane	100.000	ug/kg	D	U	89.000	ug/kg	D	U	NA			
Dioxin Furan												
1,2,3,4,6,7,8-Heptachlorodibenzo-p-dioxin	0.047	ug/kg	E	U	0.075	ug/kg	E	U	NA			
1,2,3,4,6,7,8-Heptachlorodibenzofuran	0.024	ug/kg	E	U	0.075	ug/kg	E	U	NA			
1,2,3,4,7,8,9-Heptachlorodibenzofuran	0.030	ug/kg	E	U	0.110	ug/kg	E	U	NA			
1,2,3,4,7,8-Hexachlorodibenzo-p-dioxin	0.019	ug/kg	E	U	0.120	ug/kg	E	U	NA			
1,2,3,4,7,8-Hexachlorodibenzofuran	0.014	ug/kg	E	U	0.050	ug/kg	E	U	NA			
1,2,3,6,7,8-Hexachlorodibenzo-p-dioxin	0.015	ug/kg	E	U	0.095	ug/kg	E	U	NA			
1,2,3,6,7,8-Hexachlorodibenzofuran	0.014	ug/kg	E	U	0.045	ug/kg	E	U	NA			
1,2,3,7,8,9-Hexachlorodibenzo-p-dioxin	0.016	ug/kg	E	U	0.100	ug/kg	E	U	NA			
1,2,3,7,8,9-Hexachlorodibenzofuran	0.017	ug/kg	E	U	0.060	ug/kg	E	U	NA			
1,2,3,7,8-Pentachlorodibenzo-p-dioxin	0.025	ug/kg	E	U	0.090	ug/kg	E	UJ	NA			
1,2,3,7,8-Pentachlorodibenzofuran	0.011	ug/kg	E	U	0.042	ug/kg	E	UJ	NA			
2,3,4,6,7,8-Hexachlorodibenzofuran	0.017	ug/kg	E	U	0.055	ug/kg	E	U	NA			
2,3,4,7,8-Pentachlorodibenzofuran	0.010	ug/kg	E	U	0.046	ug/kg	E	UJ	NA			
2,3,7,8-TCDD	0.190	ug/kg	E	U	0.140	ug/kg	E	U	NA			
2,3,7,8-TCDF	0.036	ug/kg	E	U	0.095	ug/kg	E	UJ	NA			
Heptachlorodibenzo-p-dioxin	0.047	ug/kg	E	U	0.075	ug/kg	E	U	NA			
Heptachlorodibenzofuran	0.027	ug/kg	E	U	0.085	ug/kg	E	U	NA			
Hexachlorodibenzo-p-dioxin	0.017	ug/kg	E	U	0.110	ug/kg	E	U	NA			
Hexachlorodibenzofuran	0.015	ug/kg	E	U	0.050	ug/kg	E	U	NA			
Octachlorodibenzo-p-dioxin	0.050	ug/kg	E	J	0.310	ug/kg	E	J	NA			
Octachlorodibenzofuran	0.058	ug/kg	E	UJ	0.075	ug/kg	E	U	NA			
Pentachlorodibenzo-p-dioxin	0.025	ug/kg	E	U	0.090	ug/kg	E	UJ	NA			
Pentachlorodibenzofuran	0.010	ug/kg	E	U	0.044	ug/kg	E	UJ	NA			
Tetrachlorodibenzo-p-dioxin	0.010	ug/kg	E	U	0.031	ug/kg	E	U	NA			
Tetrachlorodibenzofuran	0.011	ug/kg	E	U	0.038	ug/kg	E	UJ	NA			
General Chemistry												
Total Organic Carbon	NA				NA				20463.000	mg/kg	C	-

TABLE C-6A
(Continued)

PHASE I - CHEMICAL PARAMETERS

BORING NUMBER	1808				1808				1808			
SAMPLE NUMBER	067396				067405				067406			
	7.5-9				10.5-12				13.5-15			
SAMPLING DATE	08/27/91				08/27/91				08/27/91			
CHEMICAL PARAMETERS	RESULTS	UNITS	L	VQ	RESULTS	UNITS	L	VQ	RESULTS	UNITS	L	VQ
Inorganics												
Aluminum	11600.000	mg/kg	D	U	NA				NA			
Antimony	10.400	mg/kg	D	J	NA				NA			
Arsenic	5.300	mg/kg	D	-	NA				NA			
Barium	95.100	mg/kg	D	-	NA				NA			
Beryllium	0.880	mg/kg	D	-	NA				NA			
Boron	24.400	mg/kg	D	UJ	NA				NA			
Cadmium	2.400	mg/kg	D	-	NA				NA			
Calcium	60600.000	mg/kg	D	-	NA				NA			
Chromium	29.800	mg/kg	D	-	NA				NA			
Cobalt	13.900	mg/kg	D	-	NA				NA			
Copper	21.300	mg/kg	D	-	NA				NA			
Cyanide	0.120	mg/kg	D	U	NA				NA			
Iron	19100.000	mg/kg	D	-	NA				NA			
Lead	9.300	mg/kg	D	-	NA				NA			
Magnesium	14900.000	mg/kg	D	-	NA				NA			
Manganese	425.000	mg/kg	D	J	NA				NA			
Mercury	0.120	mg/kg	D	UJ	NA				NA			
Molybdenum	13.700	mg/kg	D	-	NA				NA			
Nickel	25.800	mg/kg	D	-	NA				NA			
Potassium	1160.000	mg/kg	D	-	NA				NA			
Selenium	0.500	mg/kg	D	U	NA				NA			
Silicon	806.000	mg/kg	D	-	NA				NA			
Silver	12.500	mg/kg	D	-	NA				NA			
Sodium	121.000	mg/kg	D	-	NA				NA			
Thallium	0.500	mg/kg	D	UJ	NA				NA			
Tin	48.700	mg/kg	D	U	NA				NA			
Vanadium	32.100	mg/kg	D	U	NA				NA			
Zinc	51.400	mg/kg	D	-	NA				NA			
Volatile Organics												
1,1,1,2-Tetrachloroethane	12.000	ug/kg	D	UJ	NA				NA			
1,1,1-Trichloroethane	6.000	ug/kg	D	UJ	NA				NA			
1,1,2,2-Tetrachloroethane	6.000	ug/kg	D	UJ	NA				NA			
1,1,2-Trichloroethane	6.000	ug/kg	D	UJ	NA				NA			
1,1-Dichloroethane	6.000	ug/kg	D	UJ	NA				NA			
1,1-Dichloroethene	6.000	ug/kg	D	UJ	NA				NA			
1,2,3-Trichloropropane	12.000	ug/kg	C	U	NA				NA			
1,2-Dibromo-3-chloropropane	12.000	ug/kg	D	UJ	NA				NA			
1,2-Dibromoethane	12.000	ug/kg	D	UJ	NA				NA			
1,2-Dichloroethane	6.000	ug/kg	D	UJ	NA				NA			
1,2-Dichloroethene	6.000	ug/kg	D	UJ	NA				NA			

000239

TABLE C-6A
(Continued)

PHASE I - CHEMICAL PARAMETERS

BORING NUMBER	1808				1808				1808			
SAMPLE NUMBER	067396				067405				067406			
	7.5-9				10.5-12				13.5-15			
SAMPLING DATE	08/27/91				08/27/91				08/27/91			
CHEMICAL PARAMETERS	RESULTS	UNITS	L	VQ	RESULTS	UNITS	L	VQ	RESULTS	UNITS	L	VQ
Volatile Organics												
1,2-Dichloropropane	6.000	ug/kg	D	UJ	NA				NA			
1,4-Dioxane	66.000	ug/kg	D	J	NA				NA			
2-Butanone	12.000	ug/kg	D	UJ	NA				NA			
2-Chloro-1,3-butadiene	12.000	ug/kg	D	UJ	NA				NA			
2-Hexanone	12.000	ug/kg	D	UJ	NA				NA			
3-Chloropropene	12.000	ug/kg	D	UJ	NA				NA			
4-Methyl-2-pentanone	1.000	ug/kg	D	J	NA				NA			
Acetone	19.000	ug/kg	D	UJ	NA				NA			
Acetonitrile	25.000	ug/kg	D	UJ	NA				NA			
Acrolein	25.000	ug/kg	D	R	NA				NA			
Acrylonitrile	25.000	ug/kg	D	UJ	NA				NA			
Benzene	6.000	ug/kg	D	UJ	NA				NA			
Bromodichloromethane	6.000	ug/kg	D	UJ	NA				NA			
Bromoform	6.000	ug/kg	D	UJ	NA				NA			
Bromomethane	12.000	ug/kg	D	UJ	NA				NA			
Carbon Tetrachloride	6.000	ug/kg	D	UJ	NA				NA			
Carbon disulfide	6.000	ug/kg	D	UJ	NA				NA			
Chlorobenzene	6.000	ug/kg	D	UJ	NA				NA			
Chloroethane	12.000	ug/kg	D	UJ	NA				NA			
Chloroform	6.000	ug/kg	D	UJ	NA				NA			
Chloromethane	12.000	ug/kg	D	UJ	NA				NA			
Dibromochloromethane	6.000	ug/kg	D	UJ	NA				NA			
Dibromomethane	12.000	ug/kg	D	UJ	NA				NA			
Dichlorodifluoromethane	250.000	ug/kg	D	R	NA				NA			
Ethyl cyanide	12.000	ug/kg	D	UJ	NA				NA			
Ethyl methacrylate	12.000	ug/kg	D	UJ	NA				NA			
Ethylbenzene	6.000	ug/kg	D	UJ	NA				NA			
Iodomethane	12.000	ug/kg	D	UJ	NA				NA			
Isobutyl alcohol	250.000	ug/kg	D	R	NA				NA			
Methacrylonitrile	12.000	ug/kg	D	UJ	NA				NA			
Methyl methacrylate	12.000	ug/kg	D	UJ	NA				NA			
Methylene chloride	12.000	ug/kg	D	UJ	NA				NA			
Pyridine	3.000	ug/kg	D	J	NA				NA			
Styrene	6.000	ug/kg	D	UJ	NA				NA			
Tetrachloroethene	6.000	ug/kg	D	UJ	NA				NA			
Toluene	6.000	ug/kg	D	UJ	NA				NA			
Trichloroethene	6.000	ug/kg	D	UJ	NA				NA			
Trichlorofluoromethane	12.000	ug/kg	D	R	NA				NA			
Vinyl Acetate	12.000	ug/kg	D	UJ	NA				NA			
Vinyl chloride	12.000	ug/kg	D	UJ	NA				NA			
Xylenes, Total	6.000	ug/kg	D	UJ	NA				NA			
cis-1,3-Dichloropropene	6.000	ug/kg	D	UJ	NA				NA			

TABLE C-6A
(Continued)

PHASE I - CHEMICAL PARAMETERS

BORING NUMBER	1808				1808				1808			
SAMPLE NUMBER	067396				067405				067406			
	7.5-9				10.5-12				13.5-15			
SAMPLING DATE	08/27/91				08/27/91				08/27/91			
CHEMICAL PARAMETERS	RESULTS	UNITS	L	VQ	RESULTS	UNITS	L	VQ	RESULTS	UNITS	L	VQ
Volatile Organics												
trans-1,3-Dichloropropene	6.000	ug/kg	D	UJ	NA				NA			
trans-1,4-Dichloro-2-butene	12.000	ug/kg	D	UJ	NA				NA			
Semivolatile Organics												
1,2,4,5-Tetrachlorobenzene	840.000	ug/kg	D	R	NA				NA			
1,2,4-Trichlorobenzene	840.000	ug/kg	D	R	NA				NA			
1,2-Dichlorobenzene	840.000	ug/kg	D	R	NA				NA			
1,3,5-Trinitrobenzene	840.000	ug/kg	D	R	NA				NA			
1,3-Dichlorobenzene	840.000	ug/kg	D	R	NA				NA			
1,3-Dinitrobenzene	840.000	ug/kg	D	R	NA				NA			
1,4-Dichlorobenzene	840.000	ug/kg	D	R	NA				NA			
1,4-Naphthoquinone	840.000	ug/kg	D	R	NA				NA			
1-Naphthylamine	10000.000	ug/kg	D	R	NA				NA			
2,3,4,6-Tetrachlorophenol	840.000	ug/kg	D	R	NA				NA			
2,4,5-Trichlorophenol	4000.000	ug/kg	D	R	NA				NA			
2,4,6-Trichlorophenol	840.000	ug/kg	D	R	NA				NA			
2,4-Dichlorophenol	840.000	ug/kg	D	R	NA				NA			
2,4-Dimethylphenol	840.000	ug/kg	D	R	NA				NA			
2,4-Dinitrophenol	4000.000	ug/kg	D	R	NA				NA			
2,4-Dinitrotoluene	840.000	ug/kg	D	R	NA				NA			
2,6-Dichlorophenol	840.000	ug/kg	D	R	NA				NA			
2,6-Dinitrotoluene	840.000	ug/kg	D	R	NA				NA			
2-Acetylaminofluorene	840.000	ug/kg	D	R	NA				NA			
2-Chloronaphthalene	840.000	ug/kg	D	R	NA				NA			
2-Chlorophenol	840.000	ug/kg	D	R	NA				NA			
2-Methylnaphthalene	840.000	ug/kg	D	R	NA				NA			
2-Methylphenol	840.000	ug/kg	D	R	NA				NA			
2-Naphthylamine	14000.000	ug/kg	D	R	NA				NA			
2-Nitroaniline	4000.000	ug/kg	D	R	NA				NA			
2-Nitrophenol	840.000	ug/kg	D	R	NA				NA			
2-Picoline	5800.000	ug/kg	D	R	NA				NA			
3,3'-Dichlorobenzidine	1700.000	ug/kg	D	R	NA				NA			
3,3'-Dimethylbenzidine	6800.000	ug/kg	D	R	NA				NA			
3-Methylcholanthrene	2500.000	ug/kg	D	R	NA				NA			
3-Methylphenol	840.000	ug/kg	D	R	NA				NA			
3-Nitroaniline	4000.000	ug/kg	D	R	NA				NA			
4,6-Dinitro-2-methylphenol	4000.000	ug/kg	D	R	NA				NA			
4-Aminobiphenyl	4200.000	ug/kg	D	R	NA				NA			
4-Bromophenyl phenyl ether	840.000	ug/kg	D	R	NA				NA			
4-Chloro-3-methylphenol	840.000	ug/kg	D	R	NA				NA			
4-Chlorophenylphenyl ether	840.000	ug/kg	D	R	NA				NA			

000244

TABLE C-6A
(Continued)

PHASE I - CHEMICAL PARAMETERS

BORING NUMBER	1808				1808				1808			
SAMPLE NUMBER	067396				067405				067406			
	7.5-9				10.5-12				13.5-15			
SAMPLING DATE	08/27/91				08/27/91				08/27/91			
CHEMICAL PARAMETERS	RESULTS	UNITS	L	VQ	RESULTS	UNITS	L	VQ	RESULTS	UNITS	L	VQ
Semivolatile Organics												
4-Methylphenol	840.000	ug/kg	D	R	NA				NA			
4-Nitroaniline	4000.000	ug/kg	D	R	NA				NA			
4-Nitrophenol	4000.000	ug/kg	D	R	NA				NA			
4-Nitroquinoline-1-oxide	840.000	ug/kg	D	R	NA				NA			
5-Nitro-o-toluidine	1700.000	ug/kg	D	R	NA				NA			
7,12-Dimethylbenz(a)anthracene	1700.000	ug/kg	D	R	NA				NA			
Acenaphthene	98.000	ug/kg	D	J	NA				NA			
Acenaphthylene	840.000	ug/kg	D	R	NA				NA			
Acetophenone	840.000	ug/kg	D	R	NA				NA			
Aniline	4300.000	ug/kg	D	R	NA				NA			
Anthracene	260.000	ug/kg	D	J	NA				NA			
Aramite	840.000	ug/kg	D	R	NA				NA			
Benzo(a)anthracene	600.000	ug/kg	D	J	NA				NA			
Benzo(a)pyrene	600.000	ug/kg	D	J	NA				NA			
Benzo(b)fluoranthene	560.000	ug/kg	D	J	NA				NA			
Benzo(g,h,i)perylene	480.000	ug/kg	D	J	NA				NA			
Benzo(k)fluoranthene	600.000	ug/kg	D	J	NA				NA			
Benzoic acid	4000.000	ug/kg	D	R	NA				NA			
Benzyl alcohol	840.000	ug/kg	D	R	NA				NA			
Butyl benzyl phthalate	840.000	ug/kg	D	R	NA				NA			
Chrysene	810.000	ug/kg	D	J	NA				NA			
Di-n-butyl phthalate	840.000	ug/kg	D	R	NA				NA			
Di-n-octyl phthalate	840.000	ug/kg	D	R	NA				NA			
Diallate	840.000	ug/kg	D	R	NA				NA			
Dibenzo(a,h)anthracene	180.000	ug/kg	D	J	NA				NA			
Dibenzofuran	840.000	ug/kg	D	R	NA				NA			
Diethyl phthalate	680.000	ug/kg	D	J	NA				NA			
Dimethyl phthalate	840.000	ug/kg	D	R	NA				NA			
Diphenylamine	840.000	ug/kg	D	R	NA				NA			
Ethyl methanesulfonate	840.000	ug/kg	D	R	NA				NA			
Fluoranthene	1600.000	ug/kg	D	J	NA				NA			
Fluorene	88.000	ug/kg	D	J	NA				NA			
Hexachlorobenzene	840.000	ug/kg	D	R	NA				NA			
Hexachlorobutadiene	840.000	ug/kg	D	R	NA				NA			
Hexachlorocyclopentadiene	840.000	ug/kg	D	R	NA				NA			
Hexachloroethane	840.000	ug/kg	D	R	NA				NA			
Hexachlorophene	4300.000	ug/kg	D	R	NA				NA			
Hexachloropropene	1700.000	ug/kg	D	R	NA				NA			
Indeno(1,2,3-cd)pyrene	430.000	ug/kg	D	J	NA				NA			
Isophorone	840.000	ug/kg	D	R	NA				NA			
Isosafrole	840.000	ug/kg	D	R	NA				NA			
Methapyrilene	3400.000	ug/kg	D	R	NA				NA			

TABLE C-6A
(Continued)

PHASE I - CHEMICAL PARAMETERS

BORING NUMBER	1808				1808				1808			
SAMPLE NUMBER	067396				067405				067406			
	7.5-9				10.5-12				13.5-15			
SAMPLING DATE	08/27/91				08/27/91				08/27/91			
CHEMICAL PARAMETERS	RESULTS	UNITS	L	VQ	RESULTS	UNITS	L	VQ	RESULTS	UNITS	L	VQ
Semivolatile Organics												
Methyl methanesulfonate	840.000	ug/kg	D	R	NA				NA			
Methyl parathion	100.000	ug/kg	C	U	NA				NA			
N-Nitroso-di-n-propylamine	840.000	ug/kg	D	R	NA				NA			
N-Nitrosodi-n-butylamine	1700.000	ug/kg	D	R	NA				NA			
N-Nitrosodiethylamine	840.000	ug/kg	D	R	NA				NA			
N-Nitrosodimethylamine	840.000	ug/kg	D	R	NA				NA			
N-Nitrosodiphenylamine	840.000	ug/kg	D	R	NA				NA			
N-Nitrosomethylethylamine	840.000	ug/kg	D	R	NA				NA			
N-Nitrosomorpholine	840.000	ug/kg	D	R	NA				NA			
N-Nitrosopiperidine	840.000	ug/kg	D	R	NA				NA			
N-Nitrosopyrrolidine	840.000	ug/kg	D	R	NA				NA			
Naphthalene	840.000	ug/kg	D	R	NA				NA			
Nitrobenzene	840.000	ug/kg	D	R	NA				NA			
O,O,O-Triethylphosphorothioate	840.000	ug/kg	D	R	NA				NA			
Parathion	100.000	ug/kg	C	U	NA				NA			
Pentachlorobenzene	1700.000	ug/kg	D	R	NA				NA			
Pentachloroethane	1700.000	ug/kg	D	R	NA				NA			
Pentachloronitrobenzene	1700.000	ug/kg	D	R	NA				NA			
Pentachlorophenol	4000.000	ug/kg	D	UJ	NA				NA			
Phenacetin	840.000	ug/kg	D	R	NA				NA			
Phenanthrene	1200.000	ug/kg	D	J	NA				NA			
Phenol	840.000	ug/kg	D	R	NA				NA			
Pronamide	2500.000	ug/kg	D	R	NA				NA			
Pyrene	1400.000	ug/kg	D	J	NA				NA			
Safrole	840.000	ug/kg	D	R	NA				NA			
Sulfotep	100.000	ug/kg	C	U	NA				NA			
a,a-Dimethylphenethylamine	840.000	ug/kg	D	R	NA				NA			
bis(2-Chloroethoxy)methane	840.000	ug/kg	D	R	NA				NA			
bis(2-Chloroethyl)ether	840.000	ug/kg	D	R	NA				NA			
bis(2-Chloroisopropyl) ether	840.000	ug/kg	D	R	NA				NA			
bis(2-Ethylhexyl) phthalate	840.000	ug/kg	D	R	NA				NA			
o-Toluidine	840.000	ug/kg	D	R	NA				NA			
p-Chloroaniline	840.000	ug/kg	D	R	NA				NA			
p-Dimethylaminoazobenzene	2500.000	ug/kg	D	R	NA				NA			
p-Phenylenediamine	4200.000	ug/kg	D	R	NA				NA			
Herbicide Organics												
2,4,5-T	48.000	ug/kg	D	U	NA				NA			
2,4,5-TP (Silvex)	45.000	ug/kg	D	U	NA				NA			
2,4-D	250.000	ug/kg	D	U	NA				NA			
Dinoseb	1700.000	ug/kg	D	U	NA				NA			

000433

TABLE C-6A
(Continued)

PHASE I - CHEMICAL PARAMETERS

BORING NUMBER	1808				1808				1808			
SAMPLE NUMBER	067396				067405				067406			
	7.5-9				10.5-12				13.5-15			
SAMPLING DATE	08/27/91				08/27/91				08/27/91			
CHEMICAL PARAMETERS	RESULTS	UNITS	L	VQ	RESULTS	UNITS	L	VQ	RESULTS	UNITS	L	VQ
Pesticide Organics/PCBs												
4,4'-DDD	200.000	ug/kg	D	U	NA				NA			
4,4'-DDE	200.000	ug/kg	D	U	NA				NA			
4,4'-DDT	200.000	ug/kg	D	U	NA				NA			
Aldrin	100.000	ug/kg	D	U	NA				NA			
Aroclor-1016	1000.000	ug/kg	D	U	NA				NA			
Aroclor-1221	1000.000	ug/kg	D	U	NA				NA			
Aroclor-1232	1000.000	ug/kg	D	U	NA				NA			
Aroclor-1242	1000.000	ug/kg	D	U	NA				NA			
Aroclor-1248	1000.000	ug/kg	D	U	NA				NA			
Aroclor-1254	2000.000	ug/kg	D	U	NA				NA			
Aroclor-1260	2000.000	ug/kg	D	U	NA				NA			
Azinphosmethyl	100.000	ug/kg	C	U	NA				NA			
Chlorobenzilate	200.000	ug/kg	D	U	NA				NA			
Demeton	200.000	ug/kg	C	U	NA				NA			
Diazinon	100.000	ug/kg	C	U	NA				NA			
Dieldrin	200.000	ug/kg	D	U	NA				NA			
Dimethoate	100.000	ug/kg	C	U	NA				NA			
Disulfoton	100.000	ug/kg	C	U	NA				NA			
Endosulfan II	200.000	ug/kg	D	U	NA				NA			
Endosulfan sulfate	200.000	ug/kg	D	U	NA				NA			
Endosulfan-I	100.000	ug/kg	D	U	NA				NA			
Endrin	200.000	ug/kg	D	U	NA				NA			
Endrin ketone	200.000	ug/kg	D	U	NA				NA			
Ethion	100.000	ug/kg	C	U	NA				NA			
Famphur	100.000	ug/kg	C	U	NA				NA			
Heptachlor	100.000	ug/kg	D	U	NA				NA			
Heptachlor epoxide	100.000	ug/kg	D	U	NA				NA			
Isodrin	100.000	ug/kg	D	U	NA				NA			
Kepone	200.000	ug/kg	D	U	NA				NA			
Malathion	100.000	ug/kg	C	U	NA				NA			
Methoxychlor	1000.000	ug/kg	D	U	NA				NA			
Phorate	100.000	ug/kg	C	U	NA				NA			
Tetraethylpyrophosphate	400.000	ug/kg	C	U	NA				NA			
Thionazin	100.000	ug/kg	C	U	NA				NA			
Toxaphene	2000.000	ug/kg	D	U	NA				NA			
alpha-BHC	100.000	ug/kg	D	U	NA				NA			
alpha-Chlordane	1000.000	ug/kg	D	U	NA				NA			
beta-BHC	100.000	ug/kg	D	U	NA				NA			
delta-BHC	100.000	ug/kg	D	U	NA				NA			
gamma-BHC (Lindane)	100.000	ug/kg	D	U	NA				NA			
gamma-Chlordane	1000.000	ug/kg	D	U	NA				NA			
Dioxin Furan												
1,2,3,4,6,7,8-Heptachlorodibenzo-p-dioxin	0.160	ug/kg	E	U	NA				NA			

TABLE C-6A
(Continued)

PHASE I - CHEMICAL PARAMETERS

BORING NUMBER	1808				1808				1808			
SAMPLE NUMBER	067396				067405				067406			
	7.5-9				10.5-12				13.5-15			
SAMPLING DATE	08/27/91				08/27/91				08/27/91			
CHEMICAL PARAMETERS	RESULTS	UNITS	L	VQ	RESULTS	UNITS	L	VQ	RESULTS	UNITS	L	VQ
Dioxin Furan												
1,2,3,4,6,7,8-Heptachlorodibenzofuran	0.070	ug/kg	E	U	NA				NA			
1,2,3,4,7,8,9-Heptachlorodibenzofuran	0.100	ug/kg	E	U	NA				NA			
1,2,3,4,7,8-Hexachlorodibenzo-p-dioxin	0.220	ug/kg	E	U	NA				NA			
1,2,3,4,7,8-Hexachlorodibenzofuran	0.080	ug/kg	E	U	NA				NA			
1,2,3,6,7,8-Hexachlorodibenzo-p-dioxin	0.180	ug/kg	E	U	NA				NA			
1,2,3,6,7,8-Hexachlorodibenzofuran	0.070	ug/kg	E	U	NA				NA			
1,2,3,7,8,9-Hexachlorodibenzo-p-dioxin	0.190	ug/kg	E	U	NA				NA			
1,2,3,7,8,9-Hexachlorodibenzofuran	0.090	ug/kg	E	U	NA				NA			
1,2,3,7,8-Pentachlorodibenzo-p-dioxin	0.220	ug/kg	E	UJ	NA				NA			
1,2,3,7,8-Pentachlorodibenzofuran	0.060	ug/kg	E	UJ	NA				NA			
2,3,4,6,7,8-Hexachlorodibenzofuran	0.080	ug/kg	E	U	NA				NA			
2,3,4,7,8-Pentachlorodibenzofuran	0.065	ug/kg	E	UJ	NA				NA			
2,3,7,8-TCDD	0.180	ug/kg	E	UJ	NA				NA			
2,3,7,8-TCDF	2.400	ug/kg	E	U	NA				NA			
Heptachlorodibenzo-p-dioxin	0.900	ug/kg	E	J	NA				NA			
Heptachlorodibenzofuran	0.085	ug/kg	E	U	NA				NA			
Hexachlorodibenzo-p-dioxin	0.190	ug/kg	E	U	NA				NA			
Hexachlorodibenzofuran	0.080	ug/kg	E	U	NA				NA			
Octachlorodibenzo-p-dioxin	2.700	ug/kg	E	-	NA				NA			
Octachlorodibenzofuran	0.100	ug/kg	E	U	NA				NA			
Pentachlorodibenzo-p-dioxin	0.220	ug/kg	E	UJ	NA				NA			
Pentachlorodibenzofuran	0.060	ug/kg	E	UJ	NA				NA			
Tetrachlorodibenzo-p-dioxin	0.027	ug/kg	E	U	NA				NA			
Tetrachlorodibenzofuran	0.045	ug/kg	E	UJ	NA				NA			
General Chemistry												
Sulfide	7.270	mg/kg	C	-	NA				NA			
Total Organic Carbon	NA				27071.000	mg/kg	C	-	10912.000	mg/kg	C	-

000145

TABLE C-6A
(Continued)

PHASE I - CHEMICAL PARAMETERS

BORING NUMBER	1808			1888			1888		
SAMPLE NUMBER	067401			067714			067717		
	15-16.5			0-1.5			5-6		
SAMPLING DATE	08/27/91			02/23/92			02/23/92		
CHEMICAL PARAMETERS	RESULTS	UNITS	L VQ	RESULTS	UNITS	L VQ	RESULTS	UNITS	L VQ
Inorganics									
Aluminum	8670.000	mg/kg	D -	20800.000	mg/kg	D -	25200.000	mg/kg	D -
Antimony	20.000	mg/kg	D J	22.000	mg/kg	D J	14.800	mg/kg	D J
Arsenic	3.800	mg/kg	D -	9.900	mg/kg	D -	12.500	mg/kg	D -
Barium	57.200	mg/kg	D -	160.000	mg/kg	D -	178.000	mg/kg	D -
Beryllium	0.750	mg/kg	D -	1.600	mg/kg	D -	1.600	mg/kg	D -
Boron	31.300	mg/kg	D J	NA			NA		
Cadmium	4.000	mg/kg	D -	6.500	mg/kg	D -	5.600	mg/kg	D -
Calcium	103000.000	mg/kg	D -	141000.000	mg/kg	D J	53100.000	mg/kg	D J
Chromium	29.800	mg/kg	D -	51.800	mg/kg	D -	49.300	mg/kg	D -
Cobalt	12.900	mg/kg	D -	23.500	mg/kg	D -	26.000	mg/kg	D -
Copper	20.200	mg/kg	D -	41.500	mg/kg	D -	40.500	mg/kg	D -
Cyanide	0.110	mg/kg	D U	0.110	mg/kg	D U	0.120	mg/kg	D UJ
Iron	17300.000	mg/kg	D -	36800.000	mg/kg	D -	42600.000	mg/kg	D -
Lead	6.500	mg/kg	D J	30.600	mg/kg	D -	28.300	mg/kg	D -
Magnesium	29400.000	mg/kg	D -	31500.000	mg/kg	D -	20200.000	mg/kg	D -
Manganese	408.000	mg/kg	D J	1140.000	mg/kg	D J	984.000	mg/kg	D J
Mercury	0.110	mg/kg	D UJ	0.110	mg/kg	D U	0.120	mg/kg	D U
Molybdenum	14.000	mg/kg	D -	26.800	mg/kg	D -	29.300	mg/kg	D -
Nickel	27.200	mg/kg	D -	47.100	mg/kg	D -	39.300	mg/kg	D -
Potassium	1670.000	mg/kg	D -	2430.000	mg/kg	D -	2090.000	mg/kg	D -
Selenium	0.460	mg/kg	D U	0.670	mg/kg	D U	0.730	mg/kg	D U
Silicon	773.000	mg/kg	D -	1970.000	mg/kg	D -	2620.000	mg/kg	D -
Silver	15.600	mg/kg	D -	19.700	mg/kg	D J	12.600	mg/kg	D J
Sodium	169.000	mg/kg	D -	309.000	mg/kg	D -	218.000	mg/kg	D -
Thallium	0.460	mg/kg	D U	0.450	mg/kg	D U	0.800	mg/kg	D J
Tin	44.900	mg/kg	D U	NA			47.500	mg/kg	D U
Vanadium	28.400	mg/kg	D -	57.300	mg/kg	D -	68.800	mg/kg	D -
Zinc	44.600	mg/kg	D -	92.700	mg/kg	D J	108.000	mg/kg	D J
Volatile Organics									
1,1,1,2-Tetrachloroethane	NA			11.400	ug/kg	D U	12.100	ug/kg	D U
1,1,1-Trichloroethane	6.000	ug/kg	D UJ	6.000	ug/kg	D U	6.000	ug/kg	D U
1,1,2,2-Tetrachloroethane	6.000	ug/kg	D UJ	6.000	ug/kg	D U	6.000	ug/kg	D U
1,1,2-Trichloroethane	6.000	ug/kg	D UJ	6.000	ug/kg	D U	6.000	ug/kg	D U
1,1-Dichloroethane	6.000	ug/kg	D UJ	6.000	ug/kg	D U	6.000	ug/kg	D U
1,1-Dichloroethene	6.000	ug/kg	D UJ	6.000	ug/kg	D U	6.000	ug/kg	D U
1,2,3-Trichloropropane	NA			11.400	ug/kg	C U	12.100	ug/kg	C U
1,2-Dibromo-3-chloropropane	NA			11.400	ug/kg	D U	12.100	ug/kg	D U
1,2-Dibromoethane	NA			11.400	ug/kg	D U	12.100	ug/kg	D U
1,2-Dichloroethane	6.000	ug/kg	D UJ	6.000	ug/kg	D U	6.000	ug/kg	D U
1,2-Dichloroethene	6.000	ug/kg	D UJ	6.000	ug/kg	D U	3.000	ug/kg	D J

TABLE C-6A
(Continued)

PHASE I - CHEMICAL PARAMETERS

BORING NUMBER	1808			1888			1888		
SAMPLE NUMBER	067401			067714			067717		
	15-16.5			0-1.5			5-6		
SAMPLING DATE	08/27/91			02/23/92			02/23/92		
CHEMICAL PARAMETERS	RESULTS	UNITS	L VQ	RESULTS	UNITS	L VQ	RESULTS	UNITS	L VQ
Volatile Organics									
1,2-Dichloropropane	6.000	ug/kg	D UJ	6.000	ug/kg	D U	6.000	ug/kg	D U
1,4-Dioxane	NA			229.000	ug/kg	D R	242.000	ug/kg	D R
2-Butanone	11.000	ug/kg	D UJ	11.000	ug/kg	D UJ	2.000	ug/kg	D UJ
2-Chloro-1,3-butadiene	NA			11.400	ug/kg	D U	12.100	ug/kg	D U
2-Hexanone	11.000	ug/kg	D UJ	11.000	ug/kg	D UJ	12.000	ug/kg	D UJ
3-Chloropropene	NA			11.400	ug/kg	D U	12.100	ug/kg	D U
4-Methyl-2-pentanone	11.000	ug/kg	D UJ	11.000	ug/kg	D UJ	12.000	ug/kg	D UJ
Acetone	56.000	ug/kg	D UJ	11.000	ug/kg	D UJ	7.000	ug/kg	D -
Acetonitrile	NA			22.900	ug/kg	D U	24.200	ug/kg	D U
Acrolein	NA			22.900	ug/kg	D U	24.200	ug/kg	D U
Acrylonitrile	NA			22.900	ug/kg	D U	24.200	ug/kg	D U
Benzene	6.000	ug/kg	D UJ	6.000	ug/kg	D U	6.000	ug/kg	D U
Bromodichloromethane	6.000	ug/kg	D UJ	6.000	ug/kg	D U	6.000	ug/kg	D U
Bromoform	6.000	ug/kg	D UJ	6.000	ug/kg	D U	6.000	ug/kg	D U
Bromomethane	11.000	ug/kg	D UJ	11.000	ug/kg	D UJ	12.000	ug/kg	D UJ
Carbon Tetrachloride	6.000	ug/kg	D UJ	6.000	ug/kg	D U	6.000	ug/kg	D U
Carbon disulfide	6.000	ug/kg	D UJ	6.000	ug/kg	D U	6.000	ug/kg	D U
Chlorobenzene	6.000	ug/kg	D UJ	6.000	ug/kg	D U	6.000	ug/kg	D U
Chloroethane	11.000	ug/kg	D UJ	11.000	ug/kg	D U	12.000	ug/kg	D U
Chloroform	6.000	ug/kg	D UJ	6.000	ug/kg	D U	6.000	ug/kg	D U
Chloromethane	11.000	ug/kg	D UJ	11.000	ug/kg	D U	12.000	ug/kg	D U
Dibromochloromethane	6.000	ug/kg	D UJ	6.000	ug/kg	D U	6.000	ug/kg	D U
Dibromomethane	NA			11.400	ug/kg	D U	12.100	ug/kg	D U
Dichlorodifluoromethane	NA			229.000	ug/kg	D R	242.000	ug/kg	D R
Ethyl cyanide	NA			11.400	ug/kg	D U	12.100	ug/kg	D U
Ethyl methacrylate	NA			11.400	ug/kg	D U	12.100	ug/kg	D U
Ethylbenzene	6.000	ug/kg	D UJ	6.000	ug/kg	D U	6.000	ug/kg	D U
Iodomethane	NA			11.400	ug/kg	D U	12.100	ug/kg	D U
Isobutyl alcohol	NA			229.000	ug/kg	D U	242.000	ug/kg	D U
Methacrylonitrile	NA			11.400	ug/kg	D U	12.100	ug/kg	D U
Methyl methacrylate	NA			11.400	ug/kg	D U	12.100	ug/kg	D U
Methylene chloride	26.000	ug/kg	D UJ	6.000	ug/kg	D -	6.000	ug/kg	D -
Pyridine	NA			NA			410.000	ug/kg	D U
Styrene	2.000	ug/kg	D J	6.000	ug/kg	D U	6.000	ug/kg	D U
Tetrachloroethene	6.000	ug/kg	D UJ	6.000	ug/kg	D U	6.000	ug/kg	D U
Toluene	1.000	ug/kg	D J	2.000	ug/kg	D J	6.000	ug/kg	D U
Trichloroethene	6.000	ug/kg	D UJ	6.000	ug/kg	D U	6.000	ug/kg	D U
Trichlorofluoromethane	NA			11.400	ug/kg	D U	12.100	ug/kg	D U
Vinyl Acetate	11.000	ug/kg	D UJ	11.000	ug/kg	D U	12.000	ug/kg	D U
Vinyl chloride	11.000	ug/kg	D UJ	11.000	ug/kg	D U	12.000	ug/kg	D U
Xylenes, Total	6.000	ug/kg	D UJ	6.000	ug/kg	D U	6.000	ug/kg	D U
cis-1,3-Dichloropropene	6.000	ug/kg	D UJ	6.000	ug/kg	D UJ	6.000	ug/kg	D UJ

000437

TABLE C-6A
(Continued)

PHASE I - CHEMICAL PARAMETERS

BORING NUMBER	1808			1888			1888		
SAMPLE NUMBER	067401			067714			067717		
	15-16.5			0-1.5			5-6		
SAMPLING DATE	08/27/91			02/23/92			02/23/92		
CHEMICAL PARAMETERS	RESULTS	UNITS	L VQ	RESULTS	UNITS	L VQ	RESULTS	UNITS	L VQ
Volatile Organics									
trans-1,3-Dichloropropene	6.000	ug/kg	D UJ	6.000	ug/kg	D UJ	6.000	ug/kg	D UJ
trans-1,4-Dichloro-2-butene	NA			11.400	ug/kg	D U	12.100	ug/kg	D U
Semivolatile Organics									
1,2,4,5-Tetrachlorobenzene	NA			NA			410.000	ug/kg	D U
1,2,4-Trichlorobenzene	380.000	ug/kg	D UJ	380.000	ug/kg	D U	410.000	ug/kg	D U
1,2-Dichlorobenzene	380.000	ug/kg	D UJ	380.000	ug/kg	D U	410.000	ug/kg	D U
1,3,5-Trinitrobenzene	NA			NA			410.000	ug/kg	D U
1,3-Dichlorobenzene	380.000	ug/kg	D UJ	380.000	ug/kg	D U	410.000	ug/kg	D U
1,3-Dinitrobenzene	NA			NA			410.000	ug/kg	D U
1,4-Dichlorobenzene	380.000	ug/kg	D UJ	380.000	ug/kg	D U	410.000	ug/kg	D U
1,4-Naphthoquinone	NA			NA			410.000	ug/kg	D U
1-Naphthylamine	NA			NA			5000.000	ug/kg	D U
2,3,4,6-Tetrachlorophenol	NA			NA			410.000	ug/kg	D U
2,4,5-Trichlorophenol	1800.000	ug/kg	D UJ	1800.000	ug/kg	D U	2000.000	ug/kg	D U
2,4,6-Trichlorophenol	380.000	ug/kg	D UJ	380.000	ug/kg	D U	410.000	ug/kg	D U
2,4-Dichlorophenol	380.000	ug/kg	D UJ	380.000	ug/kg	D U	410.000	ug/kg	D U
2,4-Dimethylphenol	380.000	ug/kg	D UJ	380.000	ug/kg	D U	410.000	ug/kg	D U
2,4-Dinitrophenol	1800.000	ug/kg	D UJ	1800.000	ug/kg	D U	2000.000	ug/kg	D U
2,4-Dinitrotoluene	380.000	ug/kg	D UJ	380.000	ug/kg	D U	410.000	ug/kg	D U
2,6-Dichlorophenol	NA			NA			410.000	ug/kg	D U
2,6-Dinitrotoluene	380.000	ug/kg	D UJ	380.000	ug/kg	D U	410.000	ug/kg	D U
2-Acetylaminofluorene	NA			NA			410.000	ug/kg	D U
2-Chloronaphthalene	380.000	ug/kg	D UJ	380.000	ug/kg	D U	410.000	ug/kg	D U
2-Chlorophenol	380.000	ug/kg	D UJ	380.000	ug/kg	D U	410.000	ug/kg	D U
2-Methylnaphthalene	380.000	ug/kg	D UJ	380.000	ug/kg	D U	410.000	ug/kg	D U
2-Methylphenol	380.000	ug/kg	D UJ	380.000	ug/kg	D U	410.000	ug/kg	D U
2-Naphthylamine	NA			NA			7200.000	ug/kg	D U
2-Nitroaniline	1800.000	ug/kg	D UJ	1800.000	ug/kg	D U	2000.000	ug/kg	D U
2-Nitrophenol	380.000	ug/kg	D UJ	380.000	ug/kg	D U	410.000	ug/kg	D U
2-Picoline	NA			NA			2900.000	ug/kg	D U
3,3'-Dichlorobenzidine	760.000	ug/kg	D UJ	760.000	ug/kg	D U	830.000	ug/kg	D U
3,3'-Dimethylbenzidine	NA			NA			3400.000	ug/kg	D U
3-Methylcholanthrene	NA			NA			1300.000	ug/kg	D U
3-Methylphenol	NA			NA			410.000	ug/kg	D U
3-Nitroaniline	1800.000	ug/kg	D UJ	1800.000	ug/kg	D U	2000.000	ug/kg	D U
4,6-Dinitro-2-methylphenol	1800.000	ug/kg	D UJ	1800.000	ug/kg	D U	2000.000	ug/kg	D U
4-Aminobiphenyl	NA			NA			2100.000	ug/kg	D U
4-Bromophenyl phenyl ether	380.000	ug/kg	D UJ	380.000	ug/kg	D U	410.000	ug/kg	D U
4-Chloro-3-methylphenol	380.000	ug/kg	D UJ	380.000	ug/kg	D U	410.000	ug/kg	D U
4-Chlorophenylphenyl ether	380.000	ug/kg	D UJ	380.000	ug/kg	D U	410.000	ug/kg	D U

TABLE C-6A
(Continued)

PHASE I - CHEMICAL PARAMETERS

BORING NUMBER	1808			1888			1888		
SAMPLE NUMBER	067401			067714			067717		
	15-16.5			0-1.5			5-6		
SAMPLING DATE	08/27/91			02/23/92			02/23/92		
CHEMICAL PARAMETERS	RESULTS	UNITS	L VQ	RESULTS	UNITS	L VQ	RESULTS	UNITS	L VQ
Semivolatile Organics									
4-Methylphenol	380.000	ug/kg	D UJ	380.000	ug/kg	D U	410.000	ug/kg	D UJ
4-Nitroaniline	1800.000	ug/kg	D UJ	1800.000	ug/kg	D U	2000.000	ug/kg	D U
4-Nitrophenol	1800.000	ug/kg	D UJ	1800.000	ug/kg	D U	2000.000	ug/kg	D U
4-Nitroquinoline-1-oxide	NA			NA			410.000	ug/kg	D R
5-Nitro-o-toluidine	NA			NA			840.000	ug/kg	D U
7,12-Dimethylbenz(a)anthracene	NA			NA			840.000	ug/kg	D U
Acenaphthene	380.000	ug/kg	D UJ	380.000	ug/kg	D U	410.000	ug/kg	D U
Acenaphthylene	380.000	ug/kg	D UJ	380.000	ug/kg	D U	410.000	ug/kg	D U
Acetophenone	NA			NA			410.000	ug/kg	D U
Aniline	NA			NA			2100.000	ug/kg	D U
Anthracene	380.000	ug/kg	D UJ	380.000	ug/kg	D U	410.000	ug/kg	D U
Aramite	NA			NA			410.000	ug/kg	D UJ
Benzo(a)anthracene	380.000	ug/kg	D UJ	380.000	ug/kg	D U	410.000	ug/kg	D U
Benzo(a)pyrene	380.000	ug/kg	D UJ	380.000	ug/kg	D U	410.000	ug/kg	D U
Benzo(b)fluoranthene	380.000	ug/kg	D UJ	380.000	ug/kg	D U	410.000	ug/kg	D U
Benzo(g,h,i)perylene	380.000	ug/kg	D UJ	380.000	ug/kg	D U	410.000	ug/kg	D U
Benzo(k)fluoranthene	380.000	ug/kg	D UJ	380.000	ug/kg	D U	410.000	ug/kg	D U
Benzoic acid	1800.000	ug/kg	D UJ	1800.000	ug/kg	D U	46.000	ug/kg	D U
Benzyl alcohol	380.000	ug/kg	D UJ	380.000	ug/kg	D U	410.000	ug/kg	D U
Butyl benzyl phthalate	380.000	ug/kg	D UJ	380.000	ug/kg	D U	410.000	ug/kg	D U
Chrysene	380.000	ug/kg	D UJ	380.000	ug/kg	D U	47.000	ug/kg	D J
Di-n-butyl phthalate	380.000	ug/kg	D UJ	380.000	ug/kg	D U	410.000	ug/kg	D U
Di-n-octyl phthalate	380.000	ug/kg	D UJ	380.000	ug/kg	D U	410.000	ug/kg	D U
Diallate	NA			NA			410.000	ug/kg	D UJ
Dibenzo(a,h)anthracene	380.000	ug/kg	D UJ	380.000	ug/kg	D U	410.000	ug/kg	D U
Dibenzofuran	380.000	ug/kg	D UJ	380.000	ug/kg	D U	410.000	ug/kg	D U
Diethyl phthalate	380.000	ug/kg	D UJ	380.000	ug/kg	D U	45.000	ug/kg	D J
Dimethyl phthalate	380.000	ug/kg	D UJ	380.000	ug/kg	D U	410.000	ug/kg	D U
Diphenylamine	NA			NA			410.000	ug/kg	D U
Ethyl methanesulfonate	NA			NA			410.000	ug/kg	D U
Fluoranthene	380.000	ug/kg	D UJ	380.000	ug/kg	D U	410.000	ug/kg	D U
Fluorene	380.000	ug/kg	D UJ	380.000	ug/kg	D UJ	410.000	ug/kg	D U
Hexachlorobenzene	380.000	ug/kg	D UJ	380.000	ug/kg	D U	410.000	ug/kg	D U
Hexachlorobutadiene	380.000	ug/kg	D UJ	380.000	ug/kg	D U	410.000	ug/kg	D U
Hexachlorocyclopentadiene	380.000	ug/kg	D UJ	380.000	ug/kg	D U	410.000	ug/kg	D UJ
Hexachloroethane	380.000	ug/kg	D UJ	380.000	ug/kg	D U	410.000	ug/kg	D U
Hexachlorophene	NA			NA			2100.000	ug/kg	D U
Hexachloropropene	NA			NA			840.000	ug/kg	D R
Indeno(1,2,3-cd)pyrene	380.000	ug/kg	D UJ	380.000	ug/kg	D U	410.000	ug/kg	D U
Isophorone	380.000	ug/kg	D UJ	380.000	ug/kg	D U	410.000	ug/kg	D U
Isosafrole	NA			NA			410.000	ug/kg	D U
Methapyrilene	NA			NA			1700.000	ug/kg	D UJ

000149

TABLE C-6A
(Continued)

PHASE I - CHEMICAL PARAMETERS

BORING NUMBER	1808			1888			1888		
SAMPLE NUMBER	067401			067714			067717		
	15-16.5			0-1.5			5-6		
SAMPLING DATE	08/27/91			02/23/92			02/23/92		
CHEMICAL PARAMETERS	RESULTS	UNITS	L VQ	RESULTS	UNITS	L VQ	RESULTS	UNITS	L VQ
Semivolatile Organics									
Methyl methanesulfonate	NA			NA			410.000	ug/kg	D UJ
Methyl parathion	100.000	ug/kg	C U	1.900	ug/kg	D U	2.000	ug/kg	D U
N-Nitroso-di-n-propylamine	380.000	ug/kg	D UJ	380.000	ug/kg	D U	410.000	ug/kg	D U
N-Nitrosodi-n-butylamine	NA			NA			840.000	ug/kg	D UJ
N-Nitrosodiethylamine	NA			NA			410.000	ug/kg	D UJ
N-Nitrosodimethylamine	NA			NA			410.000	ug/kg	D U
N-Nitrosodiphenylamine	380.000	ug/kg	D UJ	380.000	ug/kg	D U	410.000	ug/kg	D U
N-Nitrosomethylethylamine	NA			NA			410.000	ug/kg	D UJ
N-Nitrosomorpholine	NA			NA			410.000	ug/kg	D UJ
N-Nitrosopiperidine	NA			NA			410.000	ug/kg	D U
N-Nitrosopyrrolidine	NA			NA			410.000	ug/kg	D UJ
Naphthalene	380.000	ug/kg	D UJ	380.000	ug/kg	D U	410.000	ug/kg	D U
Nitrobenzene	380.000	ug/kg	D UJ	380.000	ug/kg	D U	410.000	ug/kg	D U
O,O,O-Triethylphosphorothioate	100.000	ug/kg	D U	NA			410.000	ug/kg	D U
Parathion	100.000	ug/kg	C U	1.900	ug/kg	D U	2.000	ug/kg	D U
Pentachlorobenzene	NA			NA			840.000	ug/kg	D U
Pentachloroethane	NA			NA			840.000	ug/kg	D U
Pentachloronitrobenzene	NA			NA			840.000	ug/kg	D U
Pentachlorophenol	1800.000	ug/kg	D UJ	1800.000	ug/kg	D U	2000.000	ug/kg	D U
Phenacetin	NA			NA			410.000	ug/kg	D U
Phenanthrene	380.000	ug/kg	D UJ	380.000	ug/kg	D U	160.000	ug/kg	D J
Phenol	380.000	ug/kg	D UJ	380.000	ug/kg	D U	410.000	ug/kg	D U
Pronamide	NA			NA			1300.000	ug/kg	D U
Pyrene	380.000	ug/kg	D UJ	380.000	ug/kg	D U	81.000	ug/kg	D J
Safrole	NA			NA			410.000	ug/kg	D U
Sulfotep	100.000	ug/kg	C U	NA			410.000	ug/kg	C U
a,a-Dimethylphenethylamine	NA			NA			410.000	ug/kg	D UJ
bis(2-Chloroethoxy)methane	380.000	ug/kg	D UJ	380.000	ug/kg	D U	410.000	ug/kg	D U
bis(2-Chloroethyl)ether	380.000	ug/kg	D UJ	380.000	ug/kg	D U	410.000	ug/kg	D U
bis(2-Chloroisopropyl) ether	380.000	ug/kg	D UJ	380.000	ug/kg	D U	410.000	ug/kg	D UJ
bis(2-Ethylhexyl) phthalate	380.000	ug/kg	D UJ	380.000	ug/kg	D U	920.000	ug/kg	D -
o-Toluidine	NA			NA			410.000	ug/kg	D U
p-Chloroaniline	380.000	ug/kg	D UJ	380.000	ug/kg	D U	410.000	ug/kg	D U
p-Dimethylaminoazobenzene	NA			NA			1300.000	ug/kg	D U
p-Phenylenediamine	NA			NA			2100.000	ug/kg	D R
Herbicide Organics									
2,4,5-T	NA			NA			48.000	ug/kg	D UJ
2,4,5-TP (Silvex)	NA			NA			44.000	ug/kg	D UJ
2,4-D	NA			NA			240.000	ug/kg	D UJ
Dinoseb	NA			NA			17.000	ug/kg	D UJ

TABLE C-6A
(Continued)

PHASE I - CHEMICAL PARAMETERS

BORING NUMBER	1808			1888			1888		
SAMPLE NUMBER	067401			067714			067717		
	15-16.5			0-1.5			5-6		
SAMPLING DATE	08/27/91			02/23/92			02/23/92		
CHEMICAL PARAMETERS	RESULTS	UNITS	L VQ	RESULTS	UNITS	L VQ	RESULTS	UNITS	L VQ
Pesticide Organics/PCBs									
4,4'-DDD	19.000	ug/kg	D U	19.000	ug/kg	D U	20.000	ug/kg	D UJ
4,4'-DDE	19.000	ug/kg	D U	19.000	ug/kg	D U	20.000	ug/kg	D UJ
4,4'-DDT	19.000	ug/kg	D U	19.000	ug/kg	D U	20.000	ug/kg	D UJ
Aldrin	9.300	ug/kg	D U	9.400	ug/kg	D U	9.900	ug/kg	D UJ
Aroclor-1016	93.000	ug/kg	D U	94.000	ug/kg	D U	99.000	ug/kg	D UJ
Aroclor-1221	93.000	ug/kg	D U	94.000	ug/kg	D U	99.000	ug/kg	D UJ
Aroclor-1232	93.000	ug/kg	D U	94.000	ug/kg	D U	99.000	ug/kg	D UJ
Aroclor-1242	93.000	ug/kg	D U	94.000	ug/kg	D U	99.000	ug/kg	D UJ
Aroclor-1248	93.000	ug/kg	D U	94.000	ug/kg	D U	99.000	ug/kg	D UJ
Aroclor-1254	190.000	ug/kg	D U	190.000	ug/kg	D U	200.000	ug/kg	D UJ
Aroclor-1260	190.000	ug/kg	D U	190.000	ug/kg	D U	200.000	ug/kg	D UJ
Azinphosmethyl	100.000	ug/kg	C U	7.700	ug/kg	D U	8.200	ug/kg	D U
Chlorobenzilate	NA			NA			20.000	ug/kg	D UJ
Demeton	200.000	ug/kg	C U	3.800	ug/kg	D U	4.100	ug/kg	D U
Diazinon	100.000	ug/kg	C U	1.900	ug/kg	D U	2.000	ug/kg	D U
Dieldrin	19.000	ug/kg	D U	19.000	ug/kg	D U	20.000	ug/kg	D UJ
Dimethoate	100.000	ug/kg	C U	NA			NA		
Disulfoton	100.000	ug/kg	C U	1.900	ug/kg	D U	200.000	ug/kg	D U
Endosulfan II	19.000	ug/kg	D U	19.000	ug/kg	D U	20.000	ug/kg	D UJ
Endosulfan sulfate	19.000	ug/kg	D U	19.000	ug/kg	D U	20.000	ug/kg	D UJ
Endosulfan-I	9.300	ug/kg	D U	9.400	ug/kg	D U	9.900	ug/kg	D UJ
Endrin	19.000	ug/kg	D U	19.000	ug/kg	D U	20.000	ug/kg	D UJ
Endrin ketone	19.000	ug/kg	D U	19.000	ug/kg	D U	20.000	ug/kg	D UJ
Ethion	100.000	ug/kg	C U	1.900	ug/kg	D U	2.000	ug/kg	D U
Famphur	100.000	ug/kg	C U	NA			NA		
Heptachlor	9.300	ug/kg	D U	9.400	ug/kg	D U	9.900	ug/kg	D UJ
Heptachlor epoxide	9.300	ug/kg	D U	9.400	ug/kg	D U	9.900	ug/kg	D UJ
Isodrin	NA			NA			9.900	ug/kg	D UJ
Kepone	NA			NA			20.000	ug/kg	D UJ
Malathion	100.000	ug/kg	C U	1.900	ug/kg	D U	2.000	ug/kg	D U
Methoxychlor	93.000	ug/kg	D U	94.000	ug/kg	D U	99.000	ug/kg	D UJ
Phorate	100.000	ug/kg	C U	NA			NA		
Tetraethylpyrophosphate	400.000	ug/kg	C U	1.900	ug/kg	D U	2.000	ug/kg	D U
Thionazin	100.000	ug/kg	C U	NA			NA		
Toxaphene	190.000	ug/kg	D U	190.000	ug/kg	D U	200.000	ug/kg	D UJ
alpha-BHC	9.300	ug/kg	D U	9.400	ug/kg	D U	9.900	ug/kg	D UJ
alpha-Chlordane	93.000	ug/kg	D U	94.000	ug/kg	D U	99.000	ug/kg	D UJ
beta-BHC	9.300	ug/kg	D U	9.400	ug/kg	D U	9.900	ug/kg	D UJ
delta-BHC	9.300	ug/kg	D U	9.400	ug/kg	D U	9.900	ug/kg	D UJ
gamma-BHC (Lindane)	9.300	ug/kg	D U	9.400	ug/kg	D U	9.900	ug/kg	D UJ
gamma-Chlordane	93.000	ug/kg	D U	94.000	ug/kg	D U	99.000	ug/kg	D UJ
Dioxin Furan									
1,2,3,4,6,7,8-Heptachlorodibenzo-p-dioxin	0.042	ug/kg	E U	0.046	ug/kg	E U	0.130	ug/kg	E U

TABLE C-6A
(Continued)

PHASE I - CHEMICAL PARAMETERS

BORING NUMBER	1808				1888				1888			
SAMPLE NUMBER	067401				067714				067717			
	15-16.5				0-1.5				5-6			
SAMPLING DATE	08/27/91				02/23/92				02/23/92			
CHEMICAL PARAMETERS	RESULTS	UNITS	L	VQ	RESULTS	UNITS	L	VQ	RESULTS	UNITS	L	VQ
Dioxin Furan												
1,2,3,4,6,7,8-Heptachlorodibenzofuran	0.026	ug/kg	E	U	0.048	ug/kg	E	U	0.170	ug/kg	E	U
1,2,3,4,7,8,9-Heptachlorodibenzofuran	0.036	ug/kg	E	U	0.068	ug/kg	E	U	0.310	ug/kg	E	U
1,2,3,4,7,8-Hexachlorodibenzo-p-dioxin	0.050	ug/kg	E	U	0.070	ug/kg	E	U	0.097	ug/kg	E	U
1,2,3,4,7,8-Hexachlorodibenzofuran	0.050	ug/kg	E	U	0.066	ug/kg	E	U	0.093	ug/kg	E	U
1,2,3,6,7,8-Hexachlorodibenzo-p-dioxin	0.040	ug/kg	E	U	0.056	ug/kg	E	U	0.097	ug/kg	E	U
1,2,3,6,7,8-Hexachlorodibenzofuran	0.045	ug/kg	E	U	0.058	ug/kg	E	U	0.082	ug/kg	E	U
1,2,3,7,8,9-Hexachlorodibenzo-p-dioxin	0.042	ug/kg	E	U	0.058	ug/kg	E	U	0.081	ug/kg	E	U
1,2,3,7,8,9-Hexachlorodibenzofuran	0.060	ug/kg	E	U	0.076	ug/kg	E	U	0.110	ug/kg	E	U
1,2,3,7,8-Pentachlorodibenzo-p-dioxin	0.050	ug/kg	E	UJ	0.047	ug/kg	E	UJ	0.260	ug/kg	E	UJ
1,2,3,7,8-Pentachlorodibenzofuran	0.040	ug/kg	E	UJ	0.060	ug/kg	E	UJ	0.140	ug/kg	E	UJ
2,3,4,6,7,8-Hexachlorodibenzofuran	0.050	ug/kg	E	U	0.069	ug/kg	E	U	0.150	ug/kg	E	U
2,3,4,7,8-Pentachlorodibenzofuran	0.043	ug/kg	E	UJ	0.065	ug/kg	E	UJ	0.150	ug/kg	E	UJ
2,3,7,8-TCDD	0.170	ug/kg	E	U	0.031	ug/kg	E	U	0.014	ug/kg	E	U
2,3,7,8-TCDF	0.110	ug/kg	E	UJ	0.012	ug/kg	E	U	0.027	ug/kg	E	U
Heptachlorodibenzo-p-dioxin	0.042	ug/kg	E	U	0.046	ug/kg	E	U	0.130	ug/kg	E	U
Heptachlorodibenzofuran	0.030	ug/kg	E	U	0.056	ug/kg	E	U	0.600	ug/kg	E	U
Hexachlorodibenzo-p-dioxin	0.044	ug/kg	E	U	0.061	ug/kg	E	U	0.084	ug/kg	E	U
Hexachlorodibenzofuran	0.050	ug/kg	E	U	0.066	ug/kg	E	U	0.150	ug/kg	E	U
Octachlorodibenzo-p-dioxin	0.085	ug/kg	E	J	1.000	ug/kg	E	-	3.800	ug/kg	E	-
Octachlorodibenzofuran	0.045	ug/kg	E	U	0.110	ug/kg	E	U	0.780	ug/kg	E	U
Pentachlorodibenzo-p-dioxin	0.050	ug/kg	E	UJ	0.047	ug/kg	E	UJ	0.210	ug/kg	E	UJ
Pentachlorodibenzofuran	0.041	ug/kg	E	UJ	0.063	ug/kg	E	UJ	0.270	ug/kg	E	UJ
Tetrachlorodibenzo-p-dioxin	0.200	ug/kg	E	U	0.026	ug/kg	E	U	0.059	ug/kg	E	U
Tetrachlorodibenzofuran	0.033	ug/kg	E	UJ	0.035	ug/kg	E	U	0.065	ug/kg	E	U
General Chemistry												
Total Organic Carbon	NA				10692.000	mg/kg	C	-	NA			

TABLE C-6A
(Continued)

PHASE I - CHEMICAL PARAMETERS

BORING NUMBER	1888			1889		
SAMPLE NUMBER	067718			067740		
	6-7.5			15.5-17.5		
SAMPLING DATE	02/23/92			02/25/92		
CHEMICAL PARAMETERS	RESULTS	UNITS	L VQ	RESULTS	UNITS	L VQ
Inorganics						
Aluminum	NA			748.000	mg/kg	D -
Antimony	NA			22.600	mg/kg	D J
Arsenic	NA			2.200	mg/kg	D -
Barium	NA			47.700	mg/kg	D -
Beryllium	NA			0.730	mg/kg	D -
Cadmium	NA			4.800	mg/kg	D J
Calcium	NA			91600.000	mg/kg	D J
Chromium	NA			29.500	mg/kg	D -
Cobalt	NA			10.700	mg/kg	D J
Copper	NA			22.600	mg/kg	D -
Cyanide	NA			0.110	mg/kg	D U
Iron	NA			16700.000	mg/kg	D J
Lead	NA			7.800	mg/kg	D -
Magnesium	NA			26800.000	mg/kg	D J
Manganese	NA			346.000	mg/kg	D J
Mercury	NA			0.110	mg/kg	D U
Molybdenum	NA			13.200	mg/kg	D J
Nickel	NA			26.600	mg/kg	D -
Potassium	NA			1220.000	mg/kg	D -
Selenium	NA			0.660	mg/kg	D UJ
Silicon	NA			818.000	mg/kg	D -
Silver	NA			15.000	mg/kg	D -
Sodium	NA			156.000	mg/kg	D -
Thallium	NA			12.500	mg/kg	D -
Vanadium	NA			25.400	mg/kg	D -
Zinc	NA			39.300	mg/kg	D J
Volatile Organics						
1,1,1-Trichloroethane	NA			6.000	ug/kg	D U
1,1,2,2-Tetrachloroethane	NA			6.000	ug/kg	D U
1,1,2-Trichloroethane	NA			6.000	ug/kg	D U
1,1-Dichloroethane	NA			6.000	ug/kg	D U
1,1-Dichloroethene	NA			6.000	ug/kg	D U
1,2-Dichloroethane	NA			6.000	ug/kg	D U
1,2-Dichloroethene	NA			6.000	ug/kg	D U
1,2-Dichloropropane	NA			6.000	ug/kg	D U
2-Butanone	NA			11.000	ug/kg	D U
2-Hexanone	NA			11.000	ug/kg	D UJ
4-Methyl-2-pentanone	NA			11.000	ug/kg	D UJ
Acetone	NA			11.000	ug/kg	D UJ
Benzene	NA			6.000	ug/kg	D U

000453

TABLE C-6A
(Continued)

PHASE I - CHEMICAL PARAMETERS

BORING NUMBER	1888			1889		
SAMPLE NUMBER	067718			067740		
	6-7.5			15.5-17.5		
SAMPLING DATE	02/23/92			02/25/92		
CHEMICAL PARAMETERS	RESULTS	UNITS	L VQ	RESULTS	UNITS	L VQ
Volatile Organics						
Bromodichloromethane	NA			6.000	ug/kg	D U
Bromoform	NA			6.000	ug/kg	D U
Bromomethane	NA			11.000	ug/kg	D UJ
Carbon Tetrachloride	NA			6.000	ug/kg	D U
Carbon disulfide	NA			6.000	ug/kg	D U
Chlorobenzene	NA			6.000	ug/kg	D U
Chloroethane	NA			11.000	ug/kg	D U
Chloroform	NA			6.000	ug/kg	D U
Chloromethane	NA			11.000	ug/kg	D UJ
Dibromochloromethane	NA			6.000	ug/kg	D U
Ethylbenzene	NA			6.000	ug/kg	D U
Methylene chloride	NA			13.000	ug/kg	D -
Styrene	NA			6.000	ug/kg	D U
Tetrachloroethene	NA			6.000	ug/kg	D U
Toluene	NA			6.000	ug/kg	D U
Trichloroethene	NA			6.000	ug/kg	D U
Vinyl Acetate	NA			11.000	ug/kg	D U
Vinyl chloride	NA			11.000	ug/kg	D U
Xylenes, Total	NA			6.000	ug/kg	D U
cis-1,3-Dichloropropene	NA			6.000	ug/kg	D U
trans-1,3-Dichloropropene	NA			6.000	ug/kg	D U
Semivolatile Organics						
1,2,4-Trichlorobenzene	NA			370.000	ug/kg	D U
1,2-Dichlorobenzene	NA			370.000	ug/kg	D U
1,3-Dichlorobenzene	NA			370.000	ug/kg	D U
1,4-Dichlorobenzene	NA			370.000	ug/kg	D U
2,4,5-Trichlorophenol	NA			1800.000	ug/kg	D U
2,4,6-Trichlorophenol	NA			370.000	ug/kg	D U
2,4-Dichlorophenol	NA			370.000	ug/kg	D U
2,4-Dimethylphenol	NA			370.000	ug/kg	D U
2,4-Dinitrophenol	NA			1800.000	ug/kg	D UJ
2,4-Dinitrotoluene	NA			370.000	ug/kg	D U
2,6-Dinitrotoluene	NA			370.000	ug/kg	D U
2-Chloronaphthalene	NA			370.000	ug/kg	D U
2-Chlorophenol	NA			370.000	ug/kg	D U
2-Methylnaphthalene	NA			370.000	ug/kg	D U
2-Methylphenol	NA			370.000	ug/kg	D U
2-Nitroaniline	NA			1800.000	ug/kg	D UJ
2-Nitrophenol	NA			370.000	ug/kg	D U
3,3'-Dichlorobenzidine	NA			740.000	ug/kg	D U

TABLE C-6A
(Continued)

PHASE I - CHEMICAL PARAMETERS

BORING NUMBER	1888			1889		
SAMPLE NUMBER	067718			067740		
	6-7.5			15.5-17.5		
SAMPLING DATE	02/23/92			02/25/92		
CHEMICAL PARAMETERS	RESULTS	UNITS	L VQ	RESULTS	UNITS	L VQ
Semivolatile Organics						
3-Nitroaniline	NA			1800.000	ug/kg	D U
4,6-Dinitro-2-methylphenol	NA			1800.000	ug/kg	D UJ
4-Bromophenyl phenyl ether	NA			370.000	ug/kg	D U
4-Chloro-3-methylphenol	NA			370.000	ug/kg	D U
4-Chlorophenylphenyl ether	NA			370.000	ug/kg	D U
4-Methylphenol	NA			370.000	ug/kg	D U
4-Nitroaniline	NA			1800.000	ug/kg	D U
4-Nitrophenol	NA			1800.000	ug/kg	D UJ
Acenaphthene	NA			370.000	ug/kg	D U
Acenaphthylene	NA			370.000	ug/kg	D U
Anthracene	NA			370.000	ug/kg	D U
Benzo(a)anthracene	NA			370.000	ug/kg	D U
Benzo(a)pyrene	NA			370.000	ug/kg	D U
Benzo(b)fluoranthene	NA			370.000	ug/kg	D U
Benzo(g,h,i)perylene	NA			370.000	ug/kg	D U
Benzo(k)fluoranthene	NA			370.000	ug/kg	D U
Benzoic acid	NA			1800.000	ug/kg	D R
Benzyl alcohol	NA			370.000	ug/kg	D UJ
Butyl benzyl phthalate	NA			370.000	ug/kg	D U
Chrysene	NA			370.000	ug/kg	D U
Di-n-butyl phthalate	NA			370.000	ug/kg	D U
Di-n-octyl phthalate	NA			370.000	ug/kg	D U
Dibenzo(a,h)anthracene	NA			370.000	ug/kg	D U
Dibenzofuran	NA			370.000	ug/kg	D U
Diethyl phthalate	NA			370.000	ug/kg	D U
Dimethyl phthalate	NA			370.000	ug/kg	D U
Fluoranthene	NA			370.000	ug/kg	D U
Fluorene	NA			370.000	ug/kg	D U
Hexachlorobenzene	NA			370.000	ug/kg	D U
Hexachlorobutadiene	NA			370.000	ug/kg	D U
Hexachlorocyclopentadiene	NA			370.000	ug/kg	D U
Hexachloroethane	NA			370.000	ug/kg	D U
Indeno(1,2,3-cd)pyrene	NA			370.000	ug/kg	D U
Isophorone	NA			370.000	ug/kg	D UJ
Methyl parathion	NA			1.900	ug/kg	D U
N-Nitroso-di-n-propylamine	NA			370.000	ug/kg	D UJ
N-Nitrosodiphenylamine	NA			370.000	ug/kg	D U
Naphthalene	NA			370.000	ug/kg	D U
Nitrobenzene	NA			370.000	ug/kg	D U
Parathion	NA			1.900	ug/kg	D U
Pentachlorophenol	NA			1800.000	ug/kg	D U
Phenanthrene	NA			370.000	ug/kg	D U

000155

TABLE C-6A
(Continued)

PHASE I - CHEMICAL PARAMETERS

BORING NUMBER	1888			1889		
SAMPLE NUMBER	067718			067740		
	6-7.5			15.5-17.5		
SAMPLING DATE	02/23/92			02/25/92		
CHEMICAL PARAMETERS	RESULTS	UNITS	L VQ	RESULTS	UNITS	L VQ
Semivolatile Organics						
Phenol	NA			370.000	ug/kg	D U
Pyrene	NA			370.000	ug/kg	D U
bis(2-Chloroethoxy)methane	NA			370.000	ug/kg	D UJ
bis(2-Chloroethyl)ether	NA			370.000	ug/kg	D U
bis(2-Chloroisopropyl) ether	NA			370.000	ug/kg	D UJ
bis(2-Ethylhexyl) phthalate	NA			370.000	ug/kg	D U
p-Chloroaniline	NA			370.000	ug/kg	D U
Pesticide Organics/PCBs						
4,4'-DDD	NA			18.000	ug/kg	D U
4,4'-DDE	NA			18.000	ug/kg	D U
4,4'-DDT	NA			18.000	ug/kg	D U
Aldrin	NA			9.200	ug/kg	D U
Aroclor-1016	NA			92.000	ug/kg	D U
Aroclor-1221	NA			92.000	ug/kg	D U
Aroclor-1232	NA			92.000	ug/kg	D U
Aroclor-1242	NA			92.000	ug/kg	D U
Aroclor-1248	NA			92.000	ug/kg	D U
Aroclor-1254	NA			180.000	ug/kg	D U
Aroclor-1260	NA			180.000	ug/kg	D U
Azinphosmethyl	NA			7.700	ug/kg	D U
Demeton	NA			3.800	ug/kg	D U
Diazinon	NA			1.900	ug/kg	D U
Dieldrin	NA			18.000	ug/kg	D U
Disulfoton	NA			1.900	ug/kg	D U
Endosulfan II	NA			18.000	ug/kg	D U
Endosulfan sulfate	NA			18.000	ug/kg	D U
Endosulfan-I	NA			9.200	ug/kg	D U
Endrin	NA			18.000	ug/kg	D U
Endrin ketone	NA			18.000	ug/kg	D U
Ethion	NA			1.900	ug/kg	D U
Heptachlor	NA			9.200	ug/kg	D U
Heptachlor epoxide	NA			9.200	ug/kg	D U
Malathion	NA			1.900	ug/kg	D U
Methoxychlor	NA			92.000	ug/kg	D U
Tetraethylpyrophosphate	NA			1.900	ug/kg	D U
Toxaphene	NA			180.000	ug/kg	D U
alpha-BHC	NA			9.200	ug/kg	D U
alpha-Chlordane	NA			92.000	ug/kg	D U
beta-BHC	NA			9.200	ug/kg	D U
delta-BHC	NA			9.200	ug/kg	D U

TABLE C-6A
(Continued)

PHASE I - CHEMICAL PARAMETERS

BORING NUMBER	1888			1889		
SAMPLE NUMBER	067718			067740		
	6-7.5			15.5-17.5		
SAMPLING DATE	02/23/92			02/25/92		
CHEMICAL PARAMETERS	RESULTS	UNITS	L VQ	RESULTS	UNITS	L VQ
Pesticide Organics/PCBs						
gamma-BHC (Lindane)	NA			9.200	ug/kg	D U
gamma-Chlordane	NA			92.000	ug/kg	D U
Dioxin Furan						
1,2,3,4,6,7,8-Heptachlorodibenzo-p-dioxin	NA			0.056	ug/kg	E U
1,2,3,4,6,7,8-Heptachlorodibenzofuran	NA			0.090	ug/kg	E U
1,2,3,4,7,8,9-Heptachlorodibenzofuran	NA			0.130	ug/kg	E U
1,2,3,4,7,8-Hexachlorodibenzo-p-dioxin	NA			0.079	ug/kg	E U
1,2,3,4,7,8-Hexachlorodibenzofuran	NA			0.059	ug/kg	E U
1,2,3,6,7,8-Hexachlorodibenzo-p-dioxin	NA			0.063	ug/kg	E U
1,2,3,6,7,8-Hexachlorodibenzofuran	NA			0.052	ug/kg	E U
1,2,3,7,8,9-Hexachlorodibenzo-p-dioxin	NA			0.066	ug/kg	E U
1,2,3,7,8,9-Hexachlorodibenzofuran	NA			0.140	ug/kg	E U
1,2,3,7,8-Pentachlorodibenzo-p-dioxin	NA			0.180	ug/kg	E UJ
1,2,3,7,8-Pentachlorodibenzofuran	NA			0.095	ug/kg	E U
2,3,4,6,7,8-Hexachlorodibenzofuran	NA			0.057	ug/kg	E U
2,3,4,7,8-Pentachlorodibenzofuran	NA			0.071	ug/kg	E U
2,3,7,8-TCDD	NA			0.024	ug/kg	E U
2,3,7,8-TCDF	NA			0.034	ug/kg	E U
Heptachlorodibenzo-p-dioxin	NA			0.056	ug/kg	E U
Heptachlorodibenzofuran	NA			0.110	ug/kg	E U
Hexachlorodibenzo-p-dioxin	NA			0.069	ug/kg	E U
Hexachlorodibenzofuran	NA			0.120	ug/kg	E U
Octachlorodibenzo-p-dioxin	NA			0.160	ug/kg	E U
Octachlorodibenzofuran	NA			0.110	ug/kg	E U
Pentachlorodibenzo-p-dioxin	NA			0.180	ug/kg	E UJ
Pentachlorodibenzofuran	NA			0.210	ug/kg	E U
Tetrachlorodibenzo-p-dioxin	NA			0.044	ug/kg	E U
Tetrachlorodibenzofuran	NA			0.056	ug/kg	E U
General Chemistry						
Total Organic Carbon	7403.000	mg/kg	C -	6020.000	mg/kg	C J

000457

TABLE C-6A
(Continued)

PHASE II - RADIOLOGICAL PARAMETERS

BORING NUMBER	11036			11036			11037		
SAMPLE NUMBER	115380			115381			115371		
	17 - 19			2.5 - 5			5 - 7.5		
SAMPLING DATE	05/17/93			05/17/93			05/15/93		
RADIOLOGICAL PARAMETERS	RESULTS	UNITS	VQ	RESULTS	UNITS	VQ	RESULTS	UNITS	VQ
CS-137	0.099	pci/g	UJ	0.522	pci/g	-	0.080	pci/g	UJ
GROSS ALPHA	10.500	pci/g	J	2532.000	pci/g	J	15.600	pci/g	-
GROSS BETA	23.900	pci/g	J	1220.000	pci/g	J	27.100	pci/g	-
NP-237	0.046	pci/g	R	1.670	pci/g	N	0.020	pci/g	R
PU-238	0.022	pci/g	UJ	0.337	pci/g	J	0.030	pci/g	J
PU-239/240	0.022	pci/g	UJ	0.022	pci/g	J	0.020	pci/g	UJ
RA-226	1.050	pci/g	-	113.000	pci/g	-	1.180	pci/g	-
RA-228	0.860	pci/g	-	6.650	pci/g	-	1.160	pci/g	-
RU-106	0.870	pci/g	UJ	2.400	pci/g	UJ	0.630	pci/g	UJ
SR-90	0.230	pci/g	UJ	1.990	pci/g	J	0.210	pci/g	UJ
TC-99	0.360	pci/g	UJ	5.130	pci/g	J	0.380	pci/g	UJ
TH-228	0.940	pci/g	-	9.360	pci/g	-	0.920	pci/g	J
TH-230	1.440	pci/g	-	720.000	pci/g	-	1.500	pci/g	J
TH-232	0.710	pci/g	-	8.220	pci/g	-	1.000	pci/g	J
TH-TOTAL	6.500	mg/kg	-	75.600	mg/kg	-	9.120	mg/kg	J
U-234	1.000	pci/g	-	553.000	pci/g	-	0.950	pci/g	-
U-235/236	0.750	pci/g	J	28.900	pci/g	-	0.060	pci/g	J
U-238	1.080	pci/g	-	577.000	pci/g	-	1.190	pci/g	-
U-TOTAL	3.100	mg/kg	J	1770.000	mg/kg	-	5.010	mg/kg	J

TABLE C-6A
(Continued)

PHASE II - RADIOLOGICAL PARAMETERS

BORING NUMBER	11037			11038			11038		
SAMPLE NUMBER	115372			115376			115377		
	17.5 - 20			0 - 2.5			12.5 - 15		
SAMPLING DATE	05/15/93			05/16/93			05/16/93		
RADIOLOGICAL PARAMETERS	RESULTS	UNITS	VQ	RESULTS	UNITS	VQ	RESULTS	UNITS	VQ
CS-137	0.070	pci/g	UJ	NA			0.072	pci/g	UJ
GROSS ALPHA	11.500	pci/g	-	NA			15.000	pci/g	J
GROSS BETA	23.700	pci/g	-	NA			19.700	pci/g	J
NP-237	0.030	pci/g	R	NA			0.055	pci/g	R
PU-238	0.010	pci/g	UJ	NA			0.021	pci/g	J
PU-239/240	0.010	pci/g	UJ	NA			0.019	pci/g	UJ
RA-226	0.900	pci/g	-	0.970	pci/g	*	0.940	pci/g	-
RA-228	0.810	pci/g	-	1.430	pci/g	*	0.880	pci/g	-
RU-106	0.650	pci/g	UJ	NA			0.570	pci/g	UJ
SR-90	0.190	pci/g	UJ	NA			0.170	pci/g	UJ
TC-99	0.390	pci/g	UJ	NA			0.380	pci/g	UJ
TH-228	0.710	pci/g	J	0.940	pci/g	*	0.790	pci/g	-
TH-230	1.100	pci/g	J	4.120	pci/g	*	1.000	pci/g	-
TH-232	0.790	pci/g	J	0.940	pci/g	*	0.750	pci/g	-
TH-TOTAL	7.190	mg/kg	J	NA			6.850	mg/kg	-
U-234	1.470	pci/g	-	23.900	pci/g	*	0.820	pci/g	-
U-235/236	0.090	pci/g	J	1.580	pci/g	*	0.025	pci/g	J
U-238	1.560	pci/g	-	78.400	pci/g	*	0.820	pci/g	-
U-TOTAL	5.500	mg/kg	J	227.000	mg/kg	*	5.320	mg/kg	J

000159

TABLE C-6A
(Continued)

PHASE II - RADIOLOGICAL PARAMETERS

BORING NUMBER	11039			11039			11040		
SAMPLE NUMBER	115384			115385			115392		
	2.5 - 5			12 - 14			2.5 - 5		
SAMPLING DATE	05/19/93			05/19/93			05/20/93		
RADIOLOGICAL PARAMETERS	RESULTS	UNITS	VQ	RESULTS	UNITS	VQ	RESULTS	UNITS	VQ
CS-137	0.380	pci/g	-	0.107	pci/g	UJ	0.120	pci/g	UJ
GROSS ALPHA	169.000	pci/g	J	20.200	pci/g	J	11.100	pci/g	J
GROSS BETA	219.000	pci/g	J	27.700	pci/g	J	19.500	pci/g	J
NP-237	0.190	pci/g	N	0.078	pci/g	N	0.076	pci/g	R
PU-238	0.140	pci/g	J	0.045	pci/g	J	0.039	pci/g	J
PU-239/240	0.080	pci/g	J	0.031	pci/g	UJ	0.029	pci/g	J
RA-226	0.820	pci/g	J	0.824	pci/g	-	1.220	pci/g	-
RA-228	1.060	pci/g	-	0.759	pci/g	J	1.130	pci/g	-
RU-106	1.000	pci/g	UJ	0.897	pci/g	UJ	0.830	pci/g	UJ
SR-90	0.170	pci/g	UJ	0.206	pci/g	UJ	NA		
TC-99	0.840	pci/g	J	0.387	pci/g	UJ	NA		
TH-228	1.020	pci/g	J	2.980	pci/g	-	1.020	pci/g	R
TH-230	4.300	pci/g	J	4.700	pci/g	-	1.300	pci/g	R
TH-232	0.760	pci/g	J	5.160	pci/g	-	0.790	pci/g	R
TH-TOTAL	6.900	mg/kg	J	47.000	mg/kg	-	7.190	mg/kg	R
U-234	97.000	pci/g	J	1.100	pci/g	J	1.320	pci/g	J
U-235/236	5.720	pci/g	J	0.063	pci/g	J	0.100	pci/g	J
U-238	119.000	pci/g	J	1.180	pci/g	J	1.840	pci/g	J
U-TOTAL	375.000	mg/kg	-	6.080	mg/kg	J	8.490	mg/kg	J

TABLE C-6A
(Continued)

PHASE II - RADIOLOGICAL PARAMETERS

BORING NUMBER	11040			11041			11041		
SAMPLE NUMBER	115393			115389			115390		
	12.5 - 15			0 - 2.5			12.5 - 15		
SAMPLING DATE	05/20/93			05/19/93			05/19/93		
RADIOLOGICAL PARAMETERS	RESULTS	UNITS	VQ	RESULTS	UNITS	VQ	RESULTS	UNITS	VQ
CS-137	0.085	pci/g	UJ	0.123	pci/g	UJ	0.117	pci/g	UJ
GROSS ALPHA	19.300	pci/g	J	75.400	pci/g	J	14.600	pci/g	J
GROSS BETA	28.300	pci/g	J	50.500	pci/g	J	28.300	pci/g	J
NP-237	0.080	pci/g	R	0.117	pci/g	N	0.110	pci/g	N
PU-238	0.038	pci/g	UJ	0.257	pci/g	J	0.040	pci/g	J
PU-239/240	0.038	pci/g	UJ	0.089	pci/g	J	0.038	pci/g	J
RA-226	0.920	pci/g	-	1.160	pci/g	-	1.150	pci/g	-
RA-228	0.900	pci/g	-	2.140	pci/g	-	0.777	pci/g	J
RU-106	0.720	pci/g	UJ	0.915	pci/g	UJ	0.806	pci/g	UJ
SR-90	NA			0.195	pci/g	J	0.185	pci/g	UJ
TC-99	NA			0.754	pci/g	J	0.342	pci/g	UJ
TH-228	1.410	pci/g	R	2.090	pci/g	-	2.370	pci/g	*
TH-230	1.010	pci/g	R	1.740	pci/g	-	4.420	pci/g	*
TH-232	0.950	pci/g	R	1.750	pci/g	-	4.710	pci/g	*
TH-TOTAL	8.640	pci/g	R	16.000	mg/kg	-	42.900	mg/kg	*
U-234	0.770	pci/g	J	8.270	pci/g	J	0.671	pci/g	J
U-235/236	0.055	pci/g	J	0.382	pci/g	J	0.015	pci/g	J
U-238	0.900	pci/g	J	12.500	pci/g	J	0.783	pci/g	J
U-TOTAL	2.490	mg/kg	J	40.700	mg/kg	J	4.710	mg/kg	J

000161

TABLE C-6A
(Continued)

PHASE II - RADIOLOGICAL PARAMETERS

BORING NUMBER	1982			1982			1983		
SAMPLE NUMBER	111484			111487			111476		
	0 - 2.5			7.5 - 10			1.5 - 2.5		
SAMPLING DATE	05/06/93			05/06/93			05/03/93		
RADIOLOGICAL PARAMETERS	RESULTS	UNITS	VQ	RESULTS	UNITS	VQ	RESULTS	UNITS	VQ
CS-137	0.080	pci/g	UJ	0.090	pci/g	UJ	0.160	pci/g	J
GROSS ALPHA	28.200	pci/g	J	9.360	pci/g	J	86.270	pci/g	-
GROSS BETA	50.800	pci/g	J	29.900	pci/g	J	73.540	pci/g	-
NP-237	0.340	pci/g	N	0.310	pci/g	N	0.237	pci/g	N
PU-238	0.100	pci/g	J	0.090	pci/g	J	0.433	pci/g	J
PU-239/240	0.060	pci/g	J	0.970	pci/g	-	0.068	pci/g	J
RA-226	1.300	pci/g	-	0.930	pci/g	J	1.350	pci/g	-
RA-228	1.190	pci/g	-	0.850	pci/g	-	2.390	pci/g	-
RU-106	0.700	pci/g	UJ	0.790	pci/g	UJ	0.830	pci/g	UJ
SR-90	0.430	pci/g	UJ	0.280	pci/g	UJ	0.550	pci/g	J
TC-99	0.360	pci/g	UJ	0.370	pci/g	UJ	0.350	pci/g	UJ
TH-228	1.190	pci/g	-	0.660	pci/g	-	2.690	pci/g	-
TH-230	1.760	pci/g	-	0.940	pci/g	-	3.470	pci/g	-
TH-232	1.020	pci/g	-	0.600	pci/g	-	2.070	pci/g	-
TH-TOTAL	9.310	mg/kg	-	5.480	mg/kg	-	18.800	mg/kg	-
U-234	11.300	pci/g	-	0.750	pci/g	-	32.000	pci/g	-
U-235/236	0.600	pci/g	UJ	0.040	pci/g	J	1.660	pci/g	-
U-238	20.300	pci/g	-	0.790	pci/g	-	30.300	pci/g	-
U-TOTAL	64.800	mg/kg	-	4.830	mg/kg	J	94.300	mg/kg	-

TABLE C-6A
(Continued)

PHASE II - RADIOLOGICAL PARAMETERS

BORING NUMBER	1983			1983			1984		
SAMPLE NUMBER	111477			111480			111466		
	2.5 - 5			17.5 - 20			2.5 - 5		
SAMPLING DATE	05/03/93			05/05/93			05/01/93		
RADIOLOGICAL PARAMETERS	RESULTS	UNITS	VQ	RESULTS	UNITS	VQ	RESULTS	UNITS	VQ
CS-137	0.086	pci/g	UJ	0.080	pci/g	UJ	0.078	pci/g	UJ
GROSS ALPHA	34.770	pci/g	-	10.700	pci/g	J	17.400	pci/g	J
GROSS BETA	39.700	pci/g	-	19.600	pci/g	J	20.800	pci/g	J
NP-237	0.185	pci/g	N	0.280	pci/g	N	0.050	pci/g	N
PU-238	0.033	pci/g	J	0.040	pci/g	J	0.027	pci/g	J
PU-239/240	0.049	pci/g	J	0.080	pci/g	J	0.110	pci/g	J
RA-226	1.170	pci/g	-	0.940	pci/g	J	1.110	pci/g	J
RA-228	1.020	pci/g	-	0.780	pci/g	-	1.060	pci/g	-
RU-106	0.660	pci/g	UJ	0.750	pci/g	UJ	0.580	pci/g	UJ
SR-90	0.470	pci/g	UJ	0.540	pci/g	UJ	0.484	pci/g	UJ
TC-99	0.400	pci/g	UJ	0.370	pci/g	UJ	0.366	pci/g	UJ
TH-228	1.110	pci/g	-	0.710	pci/g	-	0.930	pci/g	-
TH-230	4.260	pci/g	-	1.040	pci/g	-	1.510	pci/g	-
TH-232	0.870	pci/g	-	0.600	pci/g	-	0.780	pci/g	-
TH-TOTAL	7.930	mg/kg	-	5.470	mg/kg	-	7.120	mg/kg	-
U-234	3.700	pci/g	-	0.660	pci/g	-	1.639	pci/g	J
U-235/236	0.220	pci/g	J	0.030	pci/g	UJ	0.093	pci/g	J
U-238	10.900	pci/g	-	0.740	pci/g	-	1.730	pci/g	J
U-TOTAL	36.800	mg/kg	-	3.180	mg/kg	J	13.300	mg/kg	J

000163

TABLE C-6A
(Continued)

PHASE II - RADIOLOGICAL PARAMETERS

BORING NUMBER	1984			1985			1985		
SAMPLE NUMBER	111468			111441			111448		
	12.5 - 15			2 - 4			15 - 17		
SAMPLING DATE	05/01/93			04/26/93			04/27/93		
RADIOLOGICAL PARAMETERS	RESULTS	UNITS	VQ	RESULTS	UNITS	VQ	RESULTS	UNITS	VQ
CS-137	0.100	pci/g	UJ	0.250	pci/g	-	0.093	pci/g	UJ
GROSS ALPHA	9.960	pci/g	J	60.910	pci/g	-	16.680	pci/g	-
GROSS BETA	20.000	pci/g	J	51.390	pci/g	-	26.460	pci/g	-
NP-237	0.047	pci/g	N	0.462	pci/g	N	0.099	pci/g	N
PU-238	0.040	pci/g	J	0.042	pci/g	UJ	0.032	pci/g	J
PU-239/240	0.680	pci/g	-	0.049	pci/g	J	0.017	pci/g	UJ
RA-226	0.790	pci/g	J	1.870	pci/g	-	1.230	pci/g	-
RA-228	0.990	pci/g	-	1.190	pci/g	-	0.980	pci/g	-
RU-106	0.830	pci/g	UJ	0.710	pci/g	UJ	0.810	pci/g	UJ
SR-90	0.403	pci/g	UJ	0.390	pci/g	UJ	0.670	pci/g	J
TC-99	0.368	pci/g	UJ	0.360	pci/g	UJ	0.380	pci/g	UJ
TH-228	0.920	pci/g	-	0.830	pci/g	-	0.870	pci/g	-
TH-230	1.300	pci/g	-	15.360	pci/g	-	3.060	pci/g	-
TH-232	0.780	pci/g	-	0.660	pci/g	-	0.930	pci/g	-
TH-TOTAL	7.100	mg/kg	-	6.030	mg/kg	-	8.520	mg/kg	-
U-234	1.110	pci/g	J	11.570	pci/g	-	1.210	pci/g	-
U-235/236	0.046	pci/g	J	0.680	pci/g	-	0.054	pci/g	J
U-238	1.240	pci/g	J	19.770	pci/g	-	1.520	pci/g	-
U-TOTAL	12.700	mg/kg	J	62.300	mg/kg	-	5.910	mg/kg	-

TABLE C-6A
(Continued)

PHASE II - RADIOLOGICAL PARAMETERS

BORING NUMBER	1986			1987			1987		
SAMPLE NUMBER	111458			115357			115359		
	12.5 - 15			5 - 7.5			12.5 - 15		
SAMPLING DATE	04/30/93			05/13/93			05/13/93		
RADIOLOGICAL PARAMETERS	RESULTS	UNITS	VQ	RESULTS	UNITS	VQ	RESULTS	UNITS	VQ
CS-137	0.110	pci/g	UJ	0.101	pci/g	UJ	0.086	pci/g	UJ
GROSS ALPHA	9.250	pci/g	J	25.300	pci/g	-	12.300	pci/g	-
GROSS BETA	16.900	pci/g	J	44.000	pci/g	-	21.700	pci/g	-
NP-237	0.050	pci/g	N	0.116	pci/g	N	0.025	pci/g	R
PU-238	0.050	pci/g	J	0.019	pci/g	J	0.012	pci/g	UJ
PU-239/240	1.670	pci/g	-	0.037	pci/g	UJ	0.025	pci/g	UJ
RA-226	0.840	pci/g	J	1.210	pci/g	-	0.885	pci/g	-
RA-228	0.920	pci/g	-	1.370	pci/g	-	0.618	pci/g	-
RU-106	1.000	pci/g	UJ	0.725	pci/g	UJ	0.783	pci/g	UJ
SR-90	0.484	pci/g	UJ	0.163	pci/g	UJ	0.159	pci/g	UJ
TC-99	0.347	pci/g	UJ	0.307	pci/g	UJ	0.284	pci/g	UJ
TH-228	0.760	pci/g	-	0.978	pci/g	-	0.631	pci/g	-
TH-230	0.940	pci/g	-	1.690	pci/g	-	0.967	pci/g	-
TH-232	0.810	pci/g	-	1.070	pci/g	-	0.607	pci/g	-
TH-TOTAL	7.350	mg/kg	-	9.750	mg/kg	-	5.530	mg/kg	-
U-234	0.820	pci/g	J	3.560	pci/g	-	0.651	pci/g	-
U-235/236	0.035	pci/g	J	0.301	pci/g	J	0.040	pci/g	J
U-238	0.830	pci/g	J	9.350	pci/g	-	0.731	pci/g	-
U-TOTAL	11.400	mg/kg	J	28.800	mg/kg	-	3.940	mg/kg	J

000165

TABLE C-6A
(Continued)

PHASE II - RADIOLOGICAL PARAMETERS

BORING NUMBER	1988			1988			1989		
SAMPLE NUMBER	115350			115351			115362		
	2.5 - 5			17.5 - 20			2.5 - 5		
SAMPLING DATE	05/12/93			05/12/93			05/14/93		
RADIOLOGICAL PARAMETERS	RESULTS	UNITS	VQ	RESULTS	UNITS	VQ	RESULTS	UNITS	VQ
CS-137	0.091	pci/g	J	0.083	pci/g	UJ	0.070	pci/g	UJ
GROSS ALPHA	40.500	pci/g	-	15.400	pci/g	-	25.400	pci/g	-
GROSS BETA	56.800	pci/g	-	26.800	pci/g	-	35.800	pci/g	-
NP-237	0.101	pci/g	N	0.034	pci/g	R	0.030	pci/g	R
PU-238	0.328	pci/g	J	0.015	pci/g	J	0.060	pci/g	J
PU-239/240	0.056	pci/g	J	0.015	pci/g	J	0.030	pci/g	UJ
RA-226	1.150	pci/g	-	0.980	pci/g	-	0.970	pci/g	J
RA-228	2.560	pci/g	-	1.000	pci/g	-	1.220	pci/g	-
RU-106	0.731	pci/g	UJ	0.793	pci/g	UJ	0.670	pci/g	UJ
SR-90	0.149	pci/g	UJ	0.178	pci/g	UJ	0.190	pci/g	UJ
TC-99	0.342	pci/g	UJ	0.326	pci/g	UJ	0.350	pci/g	UJ
TH-228	1.920	pci/g	-	0.725	pci/g	-	0.810	pci/g	R
TH-230	2.330	pci/g	-	0.856	pci/g	-	1.480	pci/g	R
TH-232	1.960	pci/g	-	0.832	pci/g	-	0.720	pci/g	R
TH-TOTAL	17.800	mg/kg	-	7.580	mg/kg	-	6.600	mg/kg	R
U-234	24.600	pci/g	-	0.991	pci/g	-	5.660	pci/g	-
U-235/236	1.430	pci/g	-	0.077	pci/g	-	0.370	pci/g	J
U-238	37.800	pci/g	-	0.961	pci/g	-	10.600	pci/g	-
U-TOTAL	109.000	mg/kg	-	3.620	mg/kg	J	33.500	mg/kg	-

TABLE C-6A
(Continued)

PHASE II - RADIOLOGICAL PARAMETERS

BORING NUMBER	1989			1990			1990		
SAMPLE NUMBER	115363			115329			115335		
	12.5 - 15			6 - 9			17.5 - 20		
SAMPLING DATE	05/14/93			05/10/93			05/10/93		
RADIOLOGICAL PARAMETERS	RESULTS	UNITS	VQ	RESULTS	UNITS	VQ	RESULTS	UNITS	VQ
CS-137	0.100	pci/g	UJ	0.131	pci/g	UJ	0.073	pci/g	UJ
GROSS ALPHA	9.810	pci/g	UJ	178.000	pci/g	-	7.630	pci/g	J
GROSS BETA	20.000	pci/g	-	225.000	pci/g	-	16.100	pci/g	J
NP-237	0.110	pci/g	R	0.140	pci/g	N	0.116	pci/g	N
PU-238	0.030	pci/g	UJ	0.232	pci/g	J	0.043	pci/g	J
PU-239/240	0.030	pci/g	UJ	0.055	pci/g	J	0.666	pci/g	J
RA-226	1.030	pci/g	-	0.879	pci/g	-	0.883	pci/g	-
RA-228	1.070	pci/g	-	1.350	pci/g	-	0.677	pci/g	-
RU-106	0.950	pci/g	UJ	0.964	pci/g	UJ	0.739	pci/g	UJ
SR-90	0.710	pci/g	J	0.143	pci/g	UJ	0.210	pci/g	UJ
TC-99	0.360	pci/g	UJ	0.430	pci/g	UJ	0.543	pci/g	UJ
TH-228	0.980	pci/g	R	1.400	pci/g	J	0.584	pci/g	J
TH-230	1.020	pci/g	R	3.420	pci/g	J	0.792	pci/g	J
TH-232	0.600	pci/g	R	1.370	pci/g	J	0.489	pci/g	J
TH-TOTAL	5.400	mg/kg	R	12.600	mg/kg	J	4.500	mg/kg	J
U-234	0.910	pci/g	-	71.200	pci/g	-	0.785	pci/g	-
U-235/236	0.050	pci/g	J	8.040	pci/g	-	0.038	pci/g	J
U-238	0.800	pci/g	-	170.000	pci/g	-	0.745	pci/g	-
U-TOTAL	5.150	mg/kg	J	446.000	mg/kg	-	3.060	mg/kg	J

000357

TABLE C-6A
(Continued)

PHASE II - RADIOLOGICAL PARAMETERS

BORING NUMBER	1991			1991			1992		
SAMPLE NUMBER	115319			115321			115343		
	7.5 - 10			12 - 15			7.5 - 10		
SAMPLING DATE	05/06/93			05/06/93			05/11/93		
RADIOLOGICAL PARAMETERS	RESULTS	UNITS	VQ	RESULTS	UNITS	VQ	RESULTS	UNITS	VQ
CS-137	0.100	pci/g	UJ	0.100	pci/g	UJ	0.101	pci/g	J
GROSS ALPHA	20.500	pci/g	J	13.300	pci/g	J	69.300	pci/g	J
GROSS BETA	36.900	pci/g	J	25.300	pci/g	J	88.800	pci/g	J
NP-237	0.250	pci/g	N	0.300	pci/g	N	0.117	pci/g	N
PU-238	0.060	pci/g	J	0.070	pci/g	J	0.102	pci/g	J
PU-239/240	0.030	pci/g	J	0.070	pci/g	J	0.036	pci/g	J
RA-226	1.140	pci/g	-	1.040	pci/g	-	1.190	pci/g	-
RA-228	1.050	pci/g	-	0.860	pci/g	-	1.390	pci/g	-
RU-106	0.800	pci/g	UJ	0.710	pci/g	UJ	0.907	pci/g	UJ
SR-90	0.480	pci/g	UJ	0.280	pci/g	UJ	0.206	pci/g	UJ
TC-99	0.330	pci/g	UJ	0.340	pci/g	UJ	0.561	pci/g	UJ
TH-228	0.830	pci/g	J	0.790	pci/g	J	1.510	pci/g	J
TH-230	1.160	pci/g	J	1.170	pci/g	J	2.050	pci/g	J
TH-232	0.960	pci/g	J	0.660	pci/g	J	1.320	pci/g	J
TH-TOTAL	8.830	mg/kg	J	5.980	mg/kg	J	12.000	mg/kg	J
U-234	2.610	pci/g	J	0.830	pci/g	J	18.200	pci/g	-
U-235/236	0.200	pci/g	J	0.040	pci/g	J	1.140	pci/g	-
U-238	6.270	pci/g	J	0.950	pci/g	J	60.400	pci/g	-
U-TOTAL	25.400	mg/kg	J	3.240	mg/kg	J	191.000	mg/kg	-

TABLE C-6A
(Continued)

PHASE II - RADIOLOGICAL PARAMETERS

BORING NUMBER	1992			1993			1993		
SAMPLE NUMBER	115346			115339			115340		
	17.5 - 20			2.5 - 5			15 - 17.5		
SAMPLING DATE	05/11/93			05/11/93			05/11/93		
RADIOLOGICAL PARAMETERS	RESULTS	UNITS	VQ	RESULTS	UNITS	VQ	RESULTS	UNITS	VQ
CS-137	0.063	pci/g	UJ	0.095	pci/g	UJ	0.075	pci/g	UJ
GROSS ALPHA	12.100	pci/g	J	39.400	pci/g	J	15.700	pci/g	J
GROSS BETA	24.900	pci/g	J	44.700	pci/g	J	24.700	pci/g	J
NP-237	0.351	pci/g	N	0.252	pci/g	N	0.087	pci/g	N
PU-238	0.053	pci/g	UJ	0.023	pci/g	J	0.034	pci/g	J
PU-239/240	0.112	pci/g	J	0.023	pci/g	J	0.015	pci/g	UJ
RA-226	0.899	pci/g	-	1.165	pci/g	-	0.944	pci/g	-
RA-228	1.010	pci/g	-	1.210	pci/g	-	0.884	pci/g	-
RU-106	0.579	pci/g	UJ	0.589	pci/g	UJ	0.726	pci/g	UJ
SR-90	0.212	pci/g	UJ	0.224	pci/g	UJ	0.207	pci/g	UJ
TC-99	0.530	pci/g	UJ	0.522	pci/g	UJ	0.500	pci/g	UJ
TH-228	0.733	pci/g	J	0.904	pci/g	-	0.828	pci/g	-
TH-230	1.000	pci/g	J	6.720	pci/g	-	1.110	pci/g	-
TH-232	0.877	pci/g	J	0.880	pci/g	-	0.789	pci/g	-
TH-TOTAL	8.070	mg/kg	J	8.100	mg/kg	-	7.260	mg/kg	-
U-234	0.901	pci/g	-	7.330	pci/g	-	0.906	pci/g	-
U-235/236	0.058	pci/g	J	0.382	pci/g	J	0.038	pci/g	J
U-238	1.170	pci/g	-	15.300	pci/g	-	0.973	pci/g	-
U-TOTAL	3.500	mg/kg	-	38.900	mg/kg	-	3.020	mg/kg	-

000169

TABLE C-6A
(Continued)

PHASE II - CHEMICAL PARAMETERS

BORING NUMBER	11038			11036			11039		
SAMPLE NUMBER	115376			115381			115384		
	0-2.5			2.5-5			2.5-5		
SAMPLING DATE	05/16/93			05/17/93			05/19/93		
CHEMICAL PARAMETERS	RESULTS	UNITS	L VQ	RESULTS	UNITS	L VQ	RESULTS	UNITS	L VQ
Inorganics									
Aluminum	8500.000	mg/kg	C -	8690.000	mg/kg	C -	2750.000	mg/kg	C -
Antimony	0.890	mg/kg	C UJ	0.870	mg/kg	C UJ	1.000	mg/kg	C UJ
Arsenic	8.100	mg/kg	C -	5.500	mg/kg	C J	3.500	mg/kg	C -
Barium	61.200	mg/kg	C -	251.000	mg/kg	C -	26.800	mg/kg	C -
Beryllium	0.360	mg/kg	C U	0.430	mg/kg	C -	0.410	mg/kg	C U
Cadmium	0.890	mg/kg	C U	0.870	mg/kg	C U	1.000	mg/kg	C U
Calcium	83600.000	mg/kg	C -	72700.000	mg/kg	C -	92100.000	mg/kg	C -
Chromium	9.200	mg/kg	C -	20.500	mg/kg	C -	4.000	mg/kg	C -
Cobalt	5.800	mg/kg	C -	5.700	mg/kg	C -	2.100	mg/kg	C U
Copper	14.500	mg/kg	C -	14.700	mg/kg	C -	4.800	mg/kg	C -
Cyanide	0.110	mg/kg	C U	0.120	mg/kg	C U	0.160	mg/kg	C J
Iron	16100.000	mg/kg	C -	15800.000	mg/kg	C -	5630.000	mg/kg	C -
Lead	13.700	mg/kg	C -	17.200	mg/kg	C -	13.200	mg/kg	C -
Magnesium	33800.000	mg/kg	C -	27700.000	mg/kg	C -	27700.000	mg/kg	C -
Manganese	381.000	mg/kg	C -	453.000	mg/kg	C -	446.000	mg/kg	C -
Mercury	0.110	mg/kg	C U	0.110	mg/kg	C U	0.110	mg/kg	C U
Molybdenum	4.800	mg/kg	C -	5.300	mg/kg	C -	2.600	mg/kg	C -
Nickel	14.000	mg/kg	C -	15.600	mg/kg	C -	4.100	mg/kg	C U
Potassium	906.000	mg/kg	C -	1170.000	mg/kg	C -	550.000	mg/kg	C -
Selenium	0.410	mg/kg	C U	0.340	mg/kg	C U	0.400	mg/kg	C UJ
Silicon	467.000	mg/kg	C -	569.000	mg/kg	C -	787.000	mg/kg	C -
Silver	4.400	mg/kg	C -	4.600	mg/kg	C -	2.100	mg/kg	C U
Sodium	203.000	mg/kg	C -	338.000	mg/kg	C -	264.000	mg/kg	C -
Thallium	0.410	mg/kg	C U	1.700	mg/kg	C U	0.400	mg/kg	C U
Vanadium	23.100	mg/kg	C -	22.000	mg/kg	C -	8.400	mg/kg	C -
Zinc	41.000	mg/kg	C -	44.700	mg/kg	C -	22.800	mg/kg	C -
Volatile Organics									
1,1,1-Trichloroethane	11.000	ug/kg	C U	11.000	ug/kg	C U	11.000	ug/kg	C U
1,1,2,2-Tetrachloroethane	11.000	ug/kg	C U	11.000	ug/kg	C U	11.000	ug/kg	C U
1,1,2-Trichloroethane	11.000	ug/kg	C U	11.000	ug/kg	C U	11.000	ug/kg	C U
1,1-Dichloroethane	11.000	ug/kg	C U	55.000	ug/kg	C -	11.000	ug/kg	C U
1,1-Dichloroethene	11.000	ug/kg	C U	11.000	ug/kg	C U	11.000	ug/kg	C U
1,2-Dichloroethane	11.000	ug/kg	C U	11.000	ug/kg	C U	11.000	ug/kg	C U
1,2-Dichloroethene	11.000	ug/kg	C U	11.000	ug/kg	C U	11.000	ug/kg	C U
1,2-Dichloropropane	11.000	ug/kg	C U	11.000	ug/kg	C U	11.000	ug/kg	C U
2-Butanone	11.000	ug/kg	C U	13.000	ug/kg	C -	110.000	ug/kg	C -
2-Hexanone	11.000	ug/kg	C U	11.000	ug/kg	C U	1.000	ug/kg	C J
4-Methyl-2-pentanone	11.000	ug/kg	C U	11.000	ug/kg	C U	11.000	ug/kg	C U
Acetone	11.000	ug/kg	C U	64.000	ug/kg	C -	88.000	ug/kg	C -
Benzene	11.000	ug/kg	C U	4.000	ug/kg	C J	11.000	ug/kg	C U

TABLE C-6A
(Continued)

PHASE II - CHEMICAL PARAMETERS

BORING NUMBER	11038				11036				11039			
SAMPLE NUMBER	115376				115381				115384			
	0-2.5				2.5-5				2.5-5			
SAMPLING DATE	05/16/93				05/17/93				05/19/93			
CHEMICAL PARAMETERS	RESULTS	UNITS	L	VQ	RESULTS	UNITS	L	VQ	RESULTS	UNITS	L	VQ
Volatile Organics												
Bromodichloromethane	11.000	ug/kg	C	U	11.000	ug/kg	C	U	11.000	ug/kg	C	U
Bromoform	11.000	ug/kg	C	U	11.000	ug/kg	C	U	11.000	ug/kg	C	U
Bromomethane	11.000	ug/kg	C	U	11.000	ug/kg	C	U	11.000	ug/kg	C	UJ
Carbon Tetrachloride	11.000	ug/kg	C	U	11.000	ug/kg	C	U	11.000	ug/kg	C	U
Carbon disulfide	11.000	ug/kg	C	U	11.000	ug/kg	C	U	11.000	ug/kg	C	U
Chlorobenzene	11.000	ug/kg	C	U	11.000	ug/kg	C	U	11.000	ug/kg	C	U
Chloroethane	11.000	ug/kg	C	U	11.000	ug/kg	C	U	11.000	ug/kg	C	U
Chloroform	11.000	ug/kg	C	U	11.000	ug/kg	C	U	11.000	ug/kg	C	U
Chloromethane	11.000	ug/kg	C	UJ	11.000	ug/kg	C	UJ	11.000	ug/kg	C	U
Dibromochloromethane	11.000	ug/kg	C	U	11.000	ug/kg	C	U	11.000	ug/kg	C	U
Ethylbenzene	11.000	ug/kg	C	U	15.000	ug/kg	C	-	2.000	ug/kg	C	J
Methylene chloride	15.000	ug/kg	C	U	21.000	ug/kg	C	U	11.000	ug/kg	C	U
Styrene	11.000	ug/kg	C	U	11.000	ug/kg	C	U	11.000	ug/kg	C	U
Tetrachloroethene	11.000	ug/kg	C	U	2.000	ug/kg	C	J	11.000	ug/kg	C	U
Toluene	11.000	ug/kg	C	U	4.000	ug/kg	C	J	1.000	ug/kg	C	J
Trichloroethene	11.000	ug/kg	C	U	11.000	ug/kg	C	U	11.000	ug/kg	C	U
Vinyl Acetate	11.000	ug/kg	C	U	11.000	ug/kg	C	U	11.000	ug/kg	C	U
Vinyl chloride	11.000	ug/kg	C	U	2.000	ug/kg	C	J	11.000	ug/kg	C	U
Xylenes, Total	11.000	ug/kg	C	U	54.000	ug/kg	C	-	11.000	ug/kg	C	U
cis-1,3-Dichloropropene	11.000	ug/kg	C	U	11.000	ug/kg	C	U	11.000	ug/kg	C	U
trans-1,3-Dichloropropene	11.000	ug/kg	C	U	11.000	ug/kg	C	U	11.000	ug/kg	C	U
Semivolatile Organics												
1,2,4-Trichlorobenzene	380.000	ug/kg	C	U	760.000	ug/kg	C	UJ	19000.000	ug/kg	C	U
1,2-Dichlorobenzene	380.000	ug/kg	C	U	760.000	ug/kg	C	UJ	19000.000	ug/kg	C	U
1,3-Dichlorobenzene	380.000	ug/kg	C	U	760.000	ug/kg	C	UJ	19000.000	ug/kg	C	U
1,4-Dichlorobenzene	380.000	ug/kg	C	U	760.000	ug/kg	C	UJ	19000.000	ug/kg	C	U
2,4,5-Trichlorophenol	930.000	ug/kg	C	U	1800.000	ug/kg	C	UJ	46000.000	ug/kg	C	U
2,4,6-Trichlorophenol	380.000	ug/kg	C	U	760.000	ug/kg	C	UJ	19000.000	ug/kg	C	U
2,4-Dichlorophenol	380.000	ug/kg	C	U	760.000	ug/kg	C	UJ	19000.000	ug/kg	C	U
2,4-Dimethylphenol	380.000	ug/kg	C	U	760.000	ug/kg	C	UJ	19000.000	ug/kg	C	U
2,4-Dinitrophenol	930.000	ug/kg	C	UJ	1800.000	ug/kg	C	UJ	46000.000	ug/kg	C	UJ
2,4-Dinitrotoluene	380.000	ug/kg	C	U	760.000	ug/kg	C	UJ	19000.000	ug/kg	C	U
2,6-Dinitrotoluene	380.000	ug/kg	C	U	760.000	ug/kg	C	UJ	19000.000	ug/kg	C	U
2-Chloronaphthalene	380.000	ug/kg	C	U	760.000	ug/kg	C	UJ	19000.000	ug/kg	C	U
2-Chlorophenol	380.000	ug/kg	C	U	760.000	ug/kg	C	UJ	19000.000	ug/kg	C	U
2-Methylnaphthalene	380.000	ug/kg	C	U	760.000	ug/kg	C	UJ	46000.000	ug/kg	C	-
2-Methylphenol	380.000	ug/kg	C	U	760.000	ug/kg	C	UJ	19000.000	ug/kg	C	U
2-Nitroaniline	930.000	ug/kg	C	U	1800.000	ug/kg	C	UJ	46000.000	ug/kg	C	U
2-Nitrophenol	380.000	ug/kg	C	U	760.000	ug/kg	C	UJ	19000.000	ug/kg	C	U
3,3'-Dichlorobenzidine	380.000	ug/kg	C	U	760.000	ug/kg	C	UJ	19000.000	ug/kg	C	U

000174

TABLE C-6A
(Continued)

PHASE II - CHEMICAL PARAMETERS

BORING NUMBER	11038				11036				11039			
SAMPLE NUMBER	115376				115381				115384			
	0-2.5				2.5-5				2.5-5			
SAMPLING DATE	05/16/93				05/17/93				05/19/93			
CHEMICAL PARAMETERS	RESULTS	UNITS	L	VQ	RESULTS	UNITS	L	VQ	RESULTS	UNITS	L	VQ
Semivolatile Organics												
3-Nitroaniline	930.000	ug/kg	C	U	1800.000	ug/kg	C	R	46000.000	ug/kg	C	U
4,6-Dinitro-2-methylphenol	930.000	ug/kg	C	U	1800.000	ug/kg	C	UJ	46000.000	ug/kg	C	U
4-Bromophenyl phenyl ether	380.000	ug/kg	C	U	760.000	ug/kg	C	UJ	19000.000	ug/kg	C	U
4-Chloro-3-methylphenol	380.000	ug/kg	C	U	760.000	ug/kg	C	UJ	19000.000	ug/kg	C	U
4-Chlorophenylphenyl ether	380.000	ug/kg	C	U	760.000	ug/kg	C	UJ	19000.000	ug/kg	C	U
4-Methylphenol	380.000	ug/kg	C	U	760.000	ug/kg	C	UJ	19000.000	ug/kg	C	U
4-Nitroaniline	930.000	ug/kg	C	U	1800.000	ug/kg	C	UJ	46000.000	ug/kg	C	U
4-Nitrophenol	930.000	ug/kg	C	U	1800.000	ug/kg	C	UJ	46000.000	ug/kg	C	U
Acenaphthene	380.000	ug/kg	C	U	760.000	ug/kg	C	UJ	140000.000	ug/kg	C	-
Acenaphthylene	380.000	ug/kg	C	U	760.000	ug/kg	C	UJ	2500.000	ug/kg	C	J
Anthracene	73.000	ug/kg	C	J	80.000	ug/kg	C	J	250000.000	ug/kg	C	-
Benzo(a)anthracene	300.000	ug/kg	C	J	280.000	ug/kg	C	J	310000.000	ug/kg	C	-
Benzo(a)pyrene	300.000	ug/kg	C	J	230.000	ug/kg	C	J	260000.000	ug/kg	C	-
Benzo(b)fluoranthene	300.000	ug/kg	C	J	340.000	ug/kg	C	J	220000.000	ug/kg	C	-
Benzo(g,h,i)perylene	200.000	ug/kg	C	J	130.000	ug/kg	C	J	150000.000	ug/kg	C	-
Benzo(k)fluoranthene	360.000	ug/kg	C	J	760.000	ug/kg	C	UJ	140000.000	ug/kg	C	-
Butyl benzyl phthalate	380.000	ug/kg	C	U	760.000	ug/kg	C	UJ	19000.000	ug/kg	C	U
Carbazole	380.000	ug/kg	C	U	760.000	ug/kg	C	UJ	89000.000	ug/kg	C	-
Chrysene	400.000	ug/kg	C	-	350.000	ug/kg	C	J	310000.000	ug/kg	C	-
Di-n-butyl phthalate	380.000	ug/kg	C	U	760.000	ug/kg	C	UJ	19000.000	ug/kg	C	U
Di-n-octyl phthalate	380.000	ug/kg	C	U	760.000	ug/kg	C	UJ	19000.000	ug/kg	C	U
Dibenzo(a,h)anthracene	96.000	ug/kg	C	J	760.000	ug/kg	C	UJ	79000.000	ug/kg	C	-
Dibenzofuran	380.000	ug/kg	C	U	760.000	ug/kg	C	UJ	120000.000	ug/kg	C	-
Diethyl phthalate	380.000	ug/kg	C	U	760.000	ug/kg	C	UJ	19000.000	ug/kg	C	U
Dimethyl phthalate	380.000	ug/kg	C	U	760.000	ug/kg	C	UJ	19000.000	ug/kg	C	U
Fluoranthene	780.000	ug/kg	C	-	630.000	ug/kg	C	J	790000.000	ug/kg	C	-
Fluorene	380.000	ug/kg	C	U	760.000	ug/kg	C	UJ	180000.000	ug/kg	C	J
Hexachlorobenzene	380.000	ug/kg	C	U	760.000	ug/kg	C	UJ	19000.000	ug/kg	C	U
Hexachlorobutadiene	380.000	ug/kg	C	U	760.000	ug/kg	C	UJ	19000.000	ug/kg	C	U
Hexachlorocyclopentadiene	380.000	ug/kg	C	UJ	760.000	ug/kg	C	UJ	19000.000	ug/kg	C	UJ
Hexachloroethane	380.000	ug/kg	C	U	760.000	ug/kg	C	UJ	19000.000	ug/kg	C	U
Indeno(1,2,3-cd)pyrene	210.000	ug/kg	C	J	130.000	ug/kg	C	J	150000.000	ug/kg	C	-
Isophorone	380.000	ug/kg	C	U	760.000	ug/kg	C	UJ	19000.000	ug/kg	C	U
N-Nitroso-di-n-propylamine	380.000	ug/kg	C	U	760.000	ug/kg	C	UJ	19000.000	ug/kg	C	U
N-Nitrosodiphenylamine	380.000	ug/kg	C	U	760.000	ug/kg	C	UJ	19000.000	ug/kg	C	U
Naphthalene	380.000	ug/kg	C	U	760.000	ug/kg	C	UJ	96000.000	ug/kg	C	-
Nitrobenzene	380.000	ug/kg	C	U	760.000	ug/kg	C	UJ	19000.000	ug/kg	C	U
Pentachlorophenol	930.000	ug/kg	C	U	1800.000	ug/kg	C	UJ	46000.000	ug/kg	C	U
Phenanthrene	400.000	ug/kg	C	-	340.000	ug/kg	C	J	900000.000	ug/kg	C	-
Phenol	380.000	ug/kg	C	U	760.000	ug/kg	C	UJ	19000.000	ug/kg	C	U
Pyrene	630.000	ug/kg	C	-	490.000	ug/kg	C	J	610000.000	ug/kg	C	-
bis(2-Chloroethoxy)methane	380.000	ug/kg	C	U	760.000	ug/kg	C	UJ	19000.000	ug/kg	C	U

TABLE C-6A
(Continued)

PHASE II - CHEMICAL PARAMETERS

BORING NUMBER	11038			11036			11039		
SAMPLE NUMBER	115376			115381			115384		
	0-2.5			2.5-5			2.5-5		
SAMPLING DATE	05/16/93			05/17/93			05/19/93		
CHEMICAL PARAMETERS	RESULTS	UNITS	L VQ	RESULTS	UNITS	L VQ	RESULTS	UNITS	L VQ
Semivolatile Organics									
bis(2-Chloroethyl)ether	380.000	ug/kg	C U	760.000	ug/kg	C UJ	19000.000	ug/kg	C U
bis(2-Chloroisopropyl) ether	380.000	ug/kg	C U	760.000	ug/kg	C UJ	19000.000	ug/kg	C U
bis(2-Ethylhexyl) phthalate	380.000	ug/kg	C U	760.000	ug/kg	C UJ	19000.000	ug/kg	C U
p-Chloroaniline	380.000	ug/kg	C U	760.000	ug/kg	C UJ	19000.000	ug/kg	C U
Pesticide Organics/PCBs									
4,4'-DDD	3.800	ug/kg	C U	4.500	ug/kg	C J	15.000	ug/kg	C R
4,4'-DDE	3.800	ug/kg	C UJ	3.900	ug/kg	C UJ	3.800	ug/kg	C U
4,4'-DDT	3.800	ug/kg	C U	3.900	ug/kg	C UJ	3.800	ug/kg	C U
Aldrin	2.000	ug/kg	C U	2.000	ug/kg	C UJ	19.000	ug/kg	C R
Aroclor-1016	38.000	ug/kg	C U	39.000	ug/kg	C U	38.000	ug/kg	C UJ
Aroclor-1221	77.000	ug/kg	C U	79.000	ug/kg	C U	77.000	ug/kg	C UJ
Aroclor-1232	38.000	ug/kg	C U	39.000	ug/kg	C U	38.000	ug/kg	C UJ
Aroclor-1242	38.000	ug/kg	C U	39.000	ug/kg	C U	38.000	ug/kg	C UJ
Aroclor-1248	38.000	ug/kg	C U	39.000	ug/kg	C U	38.000	ug/kg	C UJ
Aroclor-1254	38.000	ug/kg	C U	39.000	ug/kg	C U	38.000	ug/kg	C UJ
Aroclor-1260	170.000	ug/kg	C J	26.000	ug/kg	C J	38.000	ug/kg	C UJ
Dieldrin	3.800	ug/kg	C U	3.900	ug/kg	C UJ	50.000	ug/kg	C R
Endosulfan II	3.800	ug/kg	C U	3.900	ug/kg	C UJ	3.800	ug/kg	C U
Endosulfan sulfate	3.800	ug/kg	C U	3.900	ug/kg	C UJ	3.800	ug/kg	C U
Endosulfan-I	2.000	ug/kg	C U	2.000	ug/kg	C UJ	2.000	ug/kg	C U
Endrin	3.800	ug/kg	C U	3.900	ug/kg	C UJ	3.800	ug/kg	C U
Endrin aldehyde	3.800	ug/kg	C U	3.900	ug/kg	C UJ	3.800	ug/kg	C U
Endrin ketone	3.800	ug/kg	C U	3.900	ug/kg	C UJ	3.800	ug/kg	C U
Heptachlor	2.000	ug/kg	C U	2.000	ug/kg	C UJ	2.000	ug/kg	C U
Heptachlor epoxide	2.000	ug/kg	C U	2.000	ug/kg	C UJ	2.000	ug/kg	C U
Methoxychlor	20.000	ug/kg	C U	20.000	ug/kg	C UJ	20.000	ug/kg	C U
Toxaphene	200.000	ug/kg	C U	200.000	ug/kg	C U	200.000	ug/kg	C UJ
alpha-BHC	2.000	ug/kg	C U	2.000	ug/kg	C UJ	2.000	ug/kg	C U
alpha-Chlordane	2.000	ug/kg	C U	2.000	ug/kg	C UJ	6.400	ug/kg	C R
beta-BHC	2.000	ug/kg	C U	2.000	ug/kg	C UJ	2.000	ug/kg	C U
delta-BHC	2.000	ug/kg	C UJ	2.000	ug/kg	C UJ	2.000	ug/kg	C U
gamma-BHC (Lindane)	2.000	ug/kg	C U	2.000	ug/kg	C UJ	5.400	ug/kg	C R
gamma-Chlordane	2.000	ug/kg	C U	2.000	ug/kg	C UJ	2.000	ug/kg	C U

001473

TABLE C-6A
(Continued)

PHASE II - CHEMICAL PARAMETERS

BORING NUMBER	11037			11039			11038		
SAMPLE NUMBER	115371			115385			115377		
	5-7.5			12-14			12.5-15		
SAMPLING DATE	05/15/93			05/19/93			05/16/93		
CHEMICAL PARAMETERS	RESULTS	UNITS L	VQ	RESULTS	UNITS L	VQ	RESULTS	UNITS L	VQ
Inorganics									
Aluminum	15400.000	mg/kg C	J	11500.000	mg/kg C	-	14000.000	mg/kg C	-
Antimony	1.100	mg/kg C	UJ	1.100	mg/kg C	UJ	0.930	mg/kg C	UJ
Arsenic	4.900	mg/kg C	-	11.500	mg/kg C	-	8.100	mg/kg C	-
Barium	182.000	mg/kg C	-	73.100	mg/kg C	-	80.500	mg/kg C	-
Beryllium	0.730	mg/kg C	-	0.490	mg/kg C	-	0.540	mg/kg C	-
Cadmium	1.100	mg/kg C	U	1.100	mg/kg C	U	0.930	mg/kg C	U
Calcium	4500.000	mg/kg C	J	93500.000	mg/kg C	-	84400.000	mg/kg C	-
Chromium	16.300	mg/kg C	J	12.500	mg/kg C	-	17.000	mg/kg C	-
Cobalt	9.500	mg/kg C	-	8.400	mg/kg C	-	8.200	mg/kg C	-
Copper	16.900	mg/kg C	J	23.200	mg/kg C	-	22.800	mg/kg C	-
Cyanide	0.120	mg/kg C	U	0.130	mg/kg C	U	0.120	mg/kg C	U
Iron	24400.000	mg/kg C	J	27300.000	mg/kg C	-	27200.000	mg/kg C	-
Lead	16.300	mg/kg C	J	11.800	mg/kg C	-	9.000	mg/kg C	-
Magnesium	3520.000	mg/kg C	J	21900.000	mg/kg C	-	22500.000	mg/kg C	-
Manganese	555.000	mg/kg C	-	514.000	mg/kg C	-	378.000	mg/kg C	-
Mercury	0.110	mg/kg C	U	0.120	mg/kg C	U	0.100	mg/kg C	U
Molybdenum	7.400	mg/kg C	-	9.000	mg/kg C	-	8.600	mg/kg C	-
Nickel	17.900	mg/kg C	J	21.700	mg/kg C	-	24.500	mg/kg C	-
Potassium	1100.000	mg/kg C	-	1530.000	mg/kg C	-	2480.000	mg/kg C	-
Selenium	0.480	mg/kg C	U	0.370	mg/kg C	UJ	0.470	mg/kg C	U
Silicon	511.000	mg/kg C	J	573.000	mg/kg C	-	966.000	mg/kg C	-
Silver	7.300	mg/kg C	-	7.400	mg/kg C	-	7.500	mg/kg C	-
Sodium	70.300	mg/kg C	-	207.000	mg/kg C	-	130.000	mg/kg C	-
Thallium	0.480	mg/kg C	U	0.370	mg/kg C	U	0.470	mg/kg C	U
Vanadium	38.400	mg/kg C	-	33.000	mg/kg C	-	37.100	mg/kg C	-
Zinc	67.900	mg/kg C	J	56.400	mg/kg C	-	60.300	mg/kg C	-
Volatile Organics									
1,1,1-Trichloroethane	12.000	ug/kg C	U	13.000	ug/kg C	U	12.000	ug/kg C	U
1,1,2,2-Tetrachloroethane	12.000	ug/kg C	U	13.000	ug/kg C	U	12.000	ug/kg C	U
1,1,2-Trichloroethane	12.000	ug/kg C	U	13.000	ug/kg C	U	12.000	ug/kg C	U
1,1-Dichloroethane	12.000	ug/kg C	U	13.000	ug/kg C	UJ	12.000	ug/kg C	U
1,1-Dichloroethene	12.000	ug/kg C	U	13.000	ug/kg C	U	12.000	ug/kg C	U
1,2-Dichloroethane	12.000	ug/kg C	U	13.000	ug/kg C	U	12.000	ug/kg C	U
1,2-Dichloroethene	12.000	ug/kg C	U	13.000	ug/kg C	U	12.000	ug/kg C	U
1,2-Dichloropropane	12.000	ug/kg C	U	13.000	ug/kg C	U	12.000	ug/kg C	U
2-Butanone	12.000	ug/kg C	U	13.000	ug/kg C	UJ	12.000	ug/kg C	U
2-Hexanone	12.000	ug/kg C	U	13.000	ug/kg C	U	12.000	ug/kg C	U
4-Methyl-2-pentanone	12.000	ug/kg C	U	13.000	ug/kg C	U	12.000	ug/kg C	U
Acetone	12.000	ug/kg C	U	20.000	ug/kg C	U	12.000	ug/kg C	U
Benzene	12.000	ug/kg C	U	13.000	ug/kg C	U	12.000	ug/kg C	U

TABLE C-6A
(Continued)

PHASE II - CHEMICAL PARAMETERS

BORING NUMBER	11037			11039			11038		
SAMPLE NUMBER	115371			115385			115377		
	5-7.5			12-14			12.5-15		
SAMPLING DATE	05/15/93			05/19/93			05/16/93		
CHEMICAL PARAMETERS	RESULTS	UNITS L	VQ	RESULTS	UNITS L	VQ	RESULTS	UNITS L	VQ
Volatile Organics									
Bromodichloromethane	12.000	ug/kg C	U	13.000	ug/kg C	U	12.000	ug/kg C	U
Bromoform	12.000	ug/kg C	U	13.000	ug/kg C	U	12.000	ug/kg C	U
Bromomethane	12.000	ug/kg C	UJ	13.000	ug/kg C	U	12.000	ug/kg C	U
Carbon Tetrachloride	12.000	ug/kg C	U	13.000	ug/kg C	U	12.000	ug/kg C	U
Carbon disulfide	12.000	ug/kg C	U	13.000	ug/kg C	U	12.000	ug/kg C	U
Chlorobenzene	12.000	ug/kg C	U	13.000	ug/kg C	U	12.000	ug/kg C	U
Chloroethane	12.000	ug/kg C	U	13.000	ug/kg C	UJ	12.000	ug/kg C	U
Chloroform	12.000	ug/kg C	U	13.000	ug/kg C	U	12.000	ug/kg C	U
Chloromethane	12.000	ug/kg C	U	13.000	ug/kg C	UJ	12.000	ug/kg C	UJ
Dibromochloromethane	12.000	ug/kg C	U	13.000	ug/kg C	U	12.000	ug/kg C	U
Ethylbenzene	12.000	ug/kg C	U	13.000	ug/kg C	U	12.000	ug/kg C	U
Methylene chloride	14.000	ug/kg C	U	17.000	ug/kg C	U	12.000	ug/kg C	U
Styrene	12.000	ug/kg C	U	13.000	ug/kg C	U	12.000	ug/kg C	U
Tetrachloroethene	12.000	ug/kg C	U	13.000	ug/kg C	U	12.000	ug/kg C	U
Toluene	12.000	ug/kg C	U	54.000	ug/kg C	-	5.000	ug/kg C	J
Trichloroethene	12.000	ug/kg C	U	13.000	ug/kg C	U	12.000	ug/kg C	U
Vinyl Acetate	12.000	ug/kg C	U	13.000	ug/kg C	U	12.000	ug/kg C	U
Vinyl chloride	12.000	ug/kg C	U	13.000	ug/kg C	U	12.000	ug/kg C	U
Xylenes, Total	12.000	ug/kg C	U	13.000	ug/kg C	U	12.000	ug/kg C	U
cis-1,3-Dichloropropene	12.000	ug/kg C	U	13.000	ug/kg C	U	12.000	ug/kg C	U
trans-1,3-Dichloropropene	12.000	ug/kg C	U	13.000	ug/kg C	U	12.000	ug/kg C	U
Semivolatile Organics									
1,2,4-Trichlorobenzene	410.000	ug/kg C	U	430.000	ug/kg C	U	410.000	ug/kg C	U
1,2-Dichlorobenzene	410.000	ug/kg C	U	430.000	ug/kg C	U	410.000	ug/kg C	U
1,3-Dichlorobenzene	410.000	ug/kg C	U	430.000	ug/kg C	U	410.000	ug/kg C	U
1,4-Dichlorobenzene	410.000	ug/kg C	U	430.000	ug/kg C	U	410.000	ug/kg C	U
2,4,5-Trichlorophenol	990.000	ug/kg C	U	1000.000	ug/kg C	U	1000.000	ug/kg C	U
2,4,6-Trichlorophenol	410.000	ug/kg C	U	430.000	ug/kg C	U	410.000	ug/kg C	U
2,4-Dichlorophenol	410.000	ug/kg C	U	430.000	ug/kg C	U	410.000	ug/kg C	U
2,4-Dimethylphenol	410.000	ug/kg C	U	430.000	ug/kg C	U	410.000	ug/kg C	U
2,4-Dinitrophenol	990.000	ug/kg C	U	1000.000	ug/kg C	U	1000.000	ug/kg C	UJ
2,4-Dinitrotoluene	410.000	ug/kg C	U	430.000	ug/kg C	U	410.000	ug/kg C	U
2,6-Dinitrotoluene	410.000	ug/kg C	U	430.000	ug/kg C	U	410.000	ug/kg C	U
2-Chloronaphthalene	410.000	ug/kg C	U	430.000	ug/kg C	U	410.000	ug/kg C	U
2-Chlorophenol	410.000	ug/kg C	U	430.000	ug/kg C	U	410.000	ug/kg C	U
2-Methylnaphthalene	410.000	ug/kg C	U	100.000	ug/kg C	J	410.000	ug/kg C	U
2-Methylphenol	410.000	ug/kg C	U	430.000	ug/kg C	U	410.000	ug/kg C	U
2-Nitroaniline	990.000	ug/kg C	U	1000.000	ug/kg C	U	1000.000	ug/kg C	U
2-Nitrophenol	410.000	ug/kg C	U	430.000	ug/kg C	U	410.000	ug/kg C	U
3,3'-Dichlorobenzidine	410.000	ug/kg C	UJ	430.000	ug/kg C	R	410.000	ug/kg C	U

001275

TABLE C-6A
(Continued)

PHASE II - CHEMICAL PARAMETERS

BORING NUMBER	11037			11039			11038		
SAMPLE NUMBER	115371			115385			115377		
	5-7.5			12-14			12.5-15		
SAMPLING DATE	05/15/93			05/19/93			05/16/93		
CHEMICAL PARAMETERS	RESULTS	UNITS L	VQ	RESULTS	UNITS L	VQ	RESULTS	UNITS L	VQ
Semivolatile Organics									
3-Nitroaniline	990.000	ug/kg C	UJ	1000.000	ug/kg C	UJ	1000.000	ug/kg C	U
4,6-Dinitro-2-methylphenol	990.000	ug/kg C	U	1000.000	ug/kg C	U	1000.000	ug/kg C	U
4-Bromophenyl phenyl ether	410.000	ug/kg C	U	430.000	ug/kg C	U	410.000	ug/kg C	U
4-Chloro-3-methylphenol	410.000	ug/kg C	U	430.000	ug/kg C	U	410.000	ug/kg C	U
4-Chlorophenylphenyl ether	410.000	ug/kg C	U	430.000	ug/kg C	U	410.000	ug/kg C	U
4-Methylphenol	410.000	ug/kg C	U	430.000	ug/kg C	U	410.000	ug/kg C	U
4-Nitroaniline	990.000	ug/kg C	U	1000.000	ug/kg C	U	1000.000	ug/kg C	U
4-Nitrophenol	990.000	ug/kg C	U	1000.000	ug/kg C	U	1000.000	ug/kg C	U
Acenaphthene	410.000	ug/kg C	U	370.000	ug/kg C	J	410.000	ug/kg C	U
Acenaphthylene	410.000	ug/kg C	U	430.000	ug/kg C	U	410.000	ug/kg C	U
Anthracene	410.000	ug/kg C	U	580.000	ug/kg C	-	410.000	ug/kg C	U
Benzo(a)anthracene	48.000	ug/kg C	J	1000.000	ug/kg C	-	410.000	ug/kg C	U
Benzo(a)pyrene	410.000	ug/kg C	U	760.000	ug/kg C	-	410.000	ug/kg C	U
Benzo(b)fluoranthene	67.000	ug/kg C	J	1200.000	ug/kg C	-	410.000	ug/kg C	U
Benzo(g,h,i)perylene	410.000	ug/kg C	U	380.000	ug/kg C	J	410.000	ug/kg C	U
Benzo(k)fluoranthene	410.000	ug/kg C	U	740.000	ug/kg C	-	410.000	ug/kg C	U
Butyl benzyl phthalate	410.000	ug/kg C	U	430.000	ug/kg C	U	410.000	ug/kg C	U
Carbazole	410.000	ug/kg C	U	210.000	ug/kg C	J	410.000	ug/kg C	U
Chrysene	48.000	ug/kg C	J	920.000	ug/kg C	-	410.000	ug/kg C	U
Di-n-butyl phthalate	410.000	ug/kg C	U	430.000	ug/kg C	U	410.000	ug/kg C	U
Di-n-octyl phthalate	410.000	ug/kg C	U	430.000	ug/kg C	U	410.000	ug/kg C	U
Dibenzo(a,h)anthracene	410.000	ug/kg C	U	180.000	ug/kg C	J	410.000	ug/kg C	U
Dibenzofuran	410.000	ug/kg C	U	260.000	ug/kg C	J	410.000	ug/kg C	U
Diethyl phthalate	410.000	ug/kg C	U	430.000	ug/kg C	U	410.000	ug/kg C	U
Dimethyl phthalate	410.000	ug/kg C	U	430.000	ug/kg C	U	410.000	ug/kg C	U
Fluoranthene	89.000	ug/kg C	J	2400.000	ug/kg C	-	410.000	ug/kg C	U
Fluorene	410.000	ug/kg C	U	430.000	ug/kg C	-	410.000	ug/kg C	U
Hexachlorobenzene	410.000	ug/kg C	U	430.000	ug/kg C	U	410.000	ug/kg C	U
Hexachlorobutadiene	410.000	ug/kg C	U	430.000	ug/kg C	U	410.000	ug/kg C	U
Hexachlorocyclopentadiene	410.000	ug/kg C	U	430.000	ug/kg C	U	410.000	ug/kg C	UJ
Hexachloroethane	410.000	ug/kg C	U	430.000	ug/kg C	U	410.000	ug/kg C	U
Indeno(1,2,3-cd)pyrene	410.000	ug/kg C	U	410.000	ug/kg C	J	410.000	ug/kg C	U
Isophorone	410.000	ug/kg C	U	430.000	ug/kg C	U	410.000	ug/kg C	U
N-Nitroso-di-n-propylamine	410.000	ug/kg C	U	430.000	ug/kg C	U	410.000	ug/kg C	U
N-Nitrosodiphenylamine	410.000	ug/kg C	U	430.000	ug/kg C	U	410.000	ug/kg C	U
Naphthalene	410.000	ug/kg C	U	320.000	ug/kg C	J	410.000	ug/kg C	U
Nitrobenzene	410.000	ug/kg C	U	430.000	ug/kg C	U	410.000	ug/kg C	U
Pentachlorophenol	990.000	ug/kg C	U	1000.000	ug/kg C	U	1000.000	ug/kg C	U
Phenanthrene	410.000	ug/kg C	U	2600.000	ug/kg C	-	410.000	ug/kg C	U
Phenol	410.000	ug/kg C	U	430.000	ug/kg C	U	410.000	ug/kg C	U
Pyrene	72.000	ug/kg C	J	1900.000	ug/kg C	-	410.000	ug/kg C	U
bis(2-Chloroethoxy)methane	410.000	ug/kg C	U	430.000	ug/kg C	U	410.000	ug/kg C	U

TABLE C-6A
(Continued)

PHASE II - CHEMICAL PARAMETERS

BORING NUMBER	11037			11039			11038		
SAMPLE NUMBER	115371			115385			115377		
	5-7.5			12-14			12.5-15		
SAMPLING DATE	05/15/93			05/19/93			05/16/93		
CHEMICAL PARAMETERS	RESULTS	UNITS L	VQ	RESULTS	UNITS L	VQ	RESULTS	UNITS L	VQ
Semivolatile Organics									
bis(2-Chloroethyl)ether	410.000	ug/kg C	U	430.000	ug/kg C	U	410.000	ug/kg C	U
bis(2-Chloroisopropyl) ether	410.000	ug/kg C	U	430.000	ug/kg C	U	410.000	ug/kg C	U
bis(2-Ethylhexyl) phthalate	410.000	ug/kg C	U	430.000	ug/kg C	U	410.000	ug/kg C	U
p-Chloroaniline	410.000	ug/kg C	UJ	430.000	ug/kg C	R	410.000	ug/kg C	U
Pesticide Organics/PCBs									
4,4'-DDD	4.100	ug/kg C	UJ	4.300	ug/kg C	UJ	4.100	ug/kg C	U
4,4'-DDE	4.100	ug/kg C	U	4.300	ug/kg C	UJ	4.100	ug/kg C	UJ
4,4'-DDT	4.100	ug/kg C	U	4.300	ug/kg C	UJ	4.100	ug/kg C	U
Aldrin	2.100	ug/kg C	U	2.200	ug/kg C	UJ	2.100	ug/kg C	U
Aroclor-1016	41.000	ug/kg C	U	43.000	ug/kg C	U	41.000	ug/kg C	U
Aroclor-1221	84.000	ug/kg C	U	88.000	ug/kg C	U	83.000	ug/kg C	U
Aroclor-1232	41.000	ug/kg C	U	43.000	ug/kg C	U	41.000	ug/kg C	U
Aroclor-1242	41.000	ug/kg C	U	43.000	ug/kg C	U	41.000	ug/kg C	U
Aroclor-1248	41.000	ug/kg C	U	43.000	ug/kg C	U	41.000	ug/kg C	U
Aroclor-1254	41.000	ug/kg C	U	43.000	ug/kg C	U	41.000	ug/kg C	U
Aroclor-1260	41.000	ug/kg C	U	43.000	ug/kg C	U	41.000	ug/kg C	U
Dieldrin	4.100	ug/kg C	U	4.300	ug/kg C	UJ	4.100	ug/kg C	U
Endosulfan II	4.100	ug/kg C	U	4.300	ug/kg C	UJ	4.100	ug/kg C	U
Endosulfan sulfate	4.100	ug/kg C	U	4.300	ug/kg C	UJ	4.100	ug/kg C	U
Endosulfan-I	2.100	ug/kg C	U	2.200	ug/kg C	UJ	2.100	ug/kg C	U
Endrin	4.100	ug/kg C	U	4.300	ug/kg C	UJ	4.100	ug/kg C	U
Endrin aldehyde	4.100	ug/kg C	UJ	4.300	ug/kg C	UJ	4.100	ug/kg C	U
Endrin ketone	4.100	ug/kg C	U	4.300	ug/kg C	UJ	4.100	ug/kg C	U
Heptachlor	2.100	ug/kg C	U	2.200	ug/kg C	UJ	2.100	ug/kg C	U
Heptachlor epoxide	2.100	ug/kg C	U	2.200	ug/kg C	UJ	2.100	ug/kg C	U
Methoxychlor	21.000	ug/kg C	U	22.000	ug/kg C	UJ	21.000	ug/kg C	U
Toxaphene	210.000	ug/kg C	U	220.000	ug/kg C	U	210.000	ug/kg C	U
alpha-BHC	2.100	ug/kg C	U	2.200	ug/kg C	UJ	2.100	ug/kg C	U
alpha-Chlordane	2.100	ug/kg C	U	2.200	ug/kg C	UJ	2.100	ug/kg C	U
beta-BHC	2.100	ug/kg C	U	2.200	ug/kg C	UJ	2.100	ug/kg C	U
delta-BHC	2.100	ug/kg C	U	2.200	ug/kg C	UJ	2.100	ug/kg C	UJ
gamma-BHC (Lindane)	2.100	ug/kg C	U	2.200	ug/kg C	UJ	2.100	ug/kg C	U
gamma-Chlordane	2.100	ug/kg C	U	2.200	ug/kg C	UJ	2.100	ug/kg C	U

000477

TABLE C-6A
(Continued)

PHASE II - CHEMICAL PARAMETERS

BORING NUMBER	11036				11037				11041			
SAMPLE NUMBER	115380				115372				115389			
	17-19				17.5-20				0-2.5			
SAMPLING DATE	05/17/93				05/15/93				05/19/93			
CHEMICAL PARAMETERS	RESULTS	UNITS	L	VQ	RESULTS	UNITS	L	VQ	RESULTS	UNITS	L	VQ
Inorganics												
Aluminum	5020.000	mg/kg	C	-	9500.000	mg/kg	C	J	8550.000	mg/kg	C	-
Antimony	0.980	mg/kg	C	UJ	0.870	mg/kg	C	UJ	0.800	mg/kg	C	UJ
Arsenic	4.800	mg/kg	C	-	5.900	mg/kg	C	-	4.600	mg/kg	C	-
Barium	82.200	mg/kg	C	J	67.100	mg/kg	C	-	67.500	mg/kg	C	J
Beryllium	0.390	mg/kg	C	U	0.350	mg/kg	C	U	0.370	mg/kg	C	-
Cadmium	0.980	mg/kg	C	U	0.870	mg/kg	C	U	0.800	mg/kg	C	U
Calcium	131000.000	mg/kg	C	-	112000.000	mg/kg	C	J	105000.000	mg/kg	C	-
Chromium	6.800	mg/kg	C	J	10.100	mg/kg	C	J	9.700	mg/kg	C	J
Cobalt	3.800	mg/kg	C	J	6.600	mg/kg	C	-	5.500	mg/kg	C	J
Copper	11.800	mg/kg	C	-	15.800	mg/kg	C	J	18.500	mg/kg	C	-
Cyanide	0.110	mg/kg	C	U	0.120	mg/kg	C	U	0.120	mg/kg	C	U
Iron	12800.000	mg/kg	C	-	17300.000	mg/kg	C	J	15200.000	mg/kg	C	-
Lead	8.800	mg/kg	C	-	9.800	mg/kg	C	J	3.100	mg/kg	C	-
Magnesium	63400.000	mg/kg	C	-	25800.000	mg/kg	C	J	45400.000	mg/kg	C	-
Manganese	327.000	mg/kg	C	J	406.000	mg/kg	C	-	373.000	mg/kg	C	J
Mercury	0.100	mg/kg	C	U	0.110	mg/kg	C	U	0.100	mg/kg	C	U
Molybdenum	4.300	mg/kg	C	J	5.400	mg/kg	C	-	4.700	mg/kg	C	J
Nickel	11.200	mg/kg	C	-	16.100	mg/kg	C	J	16.600	mg/kg	C	-
Potassium	1290.000	mg/kg	C	-	1800.000	mg/kg	C	-	1510.000	mg/kg	C	-
Selenium	0.370	mg/kg	C	U	0.480	mg/kg	C	-	0.390	mg/kg	C	U
Silicon	684.000	mg/kg	C	-	687.000	mg/kg	C	J	462.000	mg/kg	C	-
Silver	2.600	mg/kg	C	J	4.600	mg/kg	C	-	3.600	mg/kg	C	J
Sodium	156.000	mg/kg	C	-	191.000	mg/kg	C	-	181.000	mg/kg	C	-
Thallium	0.370	mg/kg	C	U	0.410	mg/kg	C	U	0.390	mg/kg	C	U
Vanadium	18.600	mg/kg	C	J	20.000	mg/kg	C	-	22.900	mg/kg	C	J
Zinc	31.900	mg/kg	C	J	45.000	mg/kg	C	J	46.200	mg/kg	C	J
Volatile Organics												
1,1,1-Trichloroethane	11.000	ug/kg	C	U	12.000	ug/kg	C	U	12.000	ug/kg	C	U
1,1,2,2-Tetrachloroethane	11.000	ug/kg	C	U	12.000	ug/kg	C	U	12.000	ug/kg	C	U
1,1,2-Trichloroethane	11.000	ug/kg	C	U	12.000	ug/kg	C	U	12.000	ug/kg	C	U
1,1-Dichloroethane	1.000	ug/kg	C	J	12.000	ug/kg	C	U	12.000	ug/kg	C	UJ
1,1-Dichloroethene	11.000	ug/kg	C	U	12.000	ug/kg	C	U	12.000	ug/kg	C	U
1,2-Dichloroethane	11.000	ug/kg	C	U	12.000	ug/kg	C	U	12.000	ug/kg	C	U
1,2-Dichloroethene	11.000	ug/kg	C	U	12.000	ug/kg	C	U	12.000	ug/kg	C	U
1,2-Dichloropropane	11.000	ug/kg	C	U	12.000	ug/kg	C	UJ	12.000	ug/kg	C	U
2-Butanone	11.000	ug/kg	C	U	12.000	ug/kg	C	U	12.000	ug/kg	C	UJ
2-Hexanone	11.000	ug/kg	C	U	2.000	ug/kg	C	J	12.000	ug/kg	C	U
4-Methyl-2-pentanone	11.000	ug/kg	C	U	20.000	ug/kg	C	-	12.000	ug/kg	C	U
Acetone	11.000	ug/kg	C	U	6.000	ug/kg	C	J	12.000	ug/kg	C	U
Benzene	11.000	ug/kg	C	U	12.000	ug/kg	C	U	12.000	ug/kg	C	U

000178

6508

TABLE C-6A
(Continued)

PHASE II - CHEMICAL PARAMETERS

BORING NUMBER	11036				11037				11041			
SAMPLE NUMBER	115380				115372				115389			
	17-19				17.5-20				0-2.5			
SAMPLING DATE	05/17/93				05/15/93				05/19/93			
CHEMICAL PARAMETERS	RESULTS	UNITS	L	VQ	RESULTS	UNITS	L	VQ	RESULTS	UNITS	L	VQ
Volatile Organics												
Bromodichloromethane	11.000	ug/kg	C	U	12.000	ug/kg	C	U	12.000	ug/kg	C	U
Bromoform	11.000	ug/kg	C	U	12.000	ug/kg	C	U	12.000	ug/kg	C	U
Bromomethane	11.000	ug/kg	C	U	12.000	ug/kg	C	UJ	12.000	ug/kg	C	U
Carbon Tetrachloride	11.000	ug/kg	C	U	12.000	ug/kg	C	U	12.000	ug/kg	C	U
Carbon disulfide	11.000	ug/kg	C	U	12.000	ug/kg	C	U	12.000	ug/kg	C	U
Chlorobenzene	11.000	ug/kg	C	U	12.000	ug/kg	C	U	12.000	ug/kg	C	U
Chloroethane	11.000	ug/kg	C	U	12.000	ug/kg	C	U	12.000	ug/kg	C	UJ
Chloroform	11.000	ug/kg	C	U	12.000	ug/kg	C	U	12.000	ug/kg	C	U
Chloromethane	11.000	ug/kg	C	UJ	12.000	ug/kg	C	UJ	12.000	ug/kg	C	UJ
Dibromochloromethane	11.000	ug/kg	C	U	12.000	ug/kg	C	U	12.000	ug/kg	C	U
Ethylbenzene	11.000	ug/kg	C	U	7.000	ug/kg	C	J	12.000	ug/kg	C	U
Methylene chloride	17.000	ug/kg	C	U	15.000	ug/kg	C	U	12.000	ug/kg	C	U
Styrene	11.000	ug/kg	C	U	12.000	ug/kg	C	U	12.000	ug/kg	C	U
Tetrachloroethene	11.000	ug/kg	C	U	12.000	ug/kg	C	U	12.000	ug/kg	C	U
Toluene	13.000	ug/kg	C	-	4.000	ug/kg	C	J	2.000	ug/kg	C	J
Trichloroethene	11.000	ug/kg	C	U	12.000	ug/kg	C	U	12.000	ug/kg	C	U
Vinyl Acetate	11.000	ug/kg	C	U	12.000	ug/kg	C	U	12.000	ug/kg	C	U
Vinyl chloride	11.000	ug/kg	C	U	12.000	ug/kg	C	U	12.000	ug/kg	C	U
Xylenes, Total	11.000	ug/kg	C	U	23.000	ug/kg	C	-	12.000	ug/kg	C	U
cis-1,3-Dichloropropene	11.000	ug/kg	C	U	12.000	ug/kg	C	U	12.000	ug/kg	C	U
trans-1,3-Dichloropropene	11.000	ug/kg	C	U	12.000	ug/kg	C	U	12.000	ug/kg	C	U
Semivolatile Organics												
1,2,4-Trichlorobenzene	370.000	ug/kg	C	U	390.000	ug/kg	C	U	3900.000	ug/kg	C	U
1,2-Dichlorobenzene	370.000	ug/kg	C	U	390.000	ug/kg	C	U	3900.000	ug/kg	C	U
1,3-Dichlorobenzene	370.000	ug/kg	C	U	390.000	ug/kg	C	U	3900.000	ug/kg	C	U
1,4-Dichlorobenzene	370.000	ug/kg	C	U	390.000	ug/kg	C	U	3900.000	ug/kg	C	U
2,4,5-Trichlorophenol	910.000	ug/kg	C	U	940.000	ug/kg	C	U	9400.000	ug/kg	C	U
2,4,6-Trichlorophenol	370.000	ug/kg	C	U	390.000	ug/kg	C	U	3900.000	ug/kg	C	U
2,4-Dichlorophenol	370.000	ug/kg	C	U	390.000	ug/kg	C	U	3900.000	ug/kg	C	U
2,4-Dimethylphenol	370.000	ug/kg	C	U	390.000	ug/kg	C	U	3900.000	ug/kg	C	U
2,4-Dinitrophenol	910.000	ug/kg	C	UJ	940.000	ug/kg	C	U	9400.000	ug/kg	C	U
2,4-Dinitrotoluene	370.000	ug/kg	C	U	390.000	ug/kg	C	U	3900.000	ug/kg	C	U
2,6-Dinitrotoluene	370.000	ug/kg	C	U	390.000	ug/kg	C	U	3900.000	ug/kg	C	U
2-Chloronaphthalene	370.000	ug/kg	C	U	390.000	ug/kg	C	U	3900.000	ug/kg	C	U
2-Chlorophenol	370.000	ug/kg	C	U	390.000	ug/kg	C	U	3900.000	ug/kg	C	U
2-Methylnaphthalene	370.000	ug/kg	C	U	390.000	ug/kg	C	U	3900.000	ug/kg	C	U
2-Methylphenol	370.000	ug/kg	C	U	390.000	ug/kg	C	U	3900.000	ug/kg	C	U
2-Nitroaniline	910.000	ug/kg	C	U	940.000	ug/kg	C	U	9400.000	ug/kg	C	U
2-Nitrophenol	370.000	ug/kg	C	U	390.000	ug/kg	C	U	3900.000	ug/kg	C	U
3,3'-Dichlorobenzidine	370.000	ug/kg	C	U	390.000	ug/kg	C	UJ	3900.000	ug/kg	C	R

TABLE C-6A
(Continued)

PHASE II - CHEMICAL PARAMETERS

BORING NUMBER	11036				11037				11041			
SAMPLE NUMBER	115380				115372				115389			
	17-19				17.5-20				0-2.5			
SAMPLING DATE	05/17/93				05/15/93				05/19/93			
CHEMICAL PARAMETERS	RESULTS	UNITS	L	VQ	RESULTS	UNITS	L	VQ	RESULTS	UNITS	L	VQ
Semivolatile Organics												
3-Nitroaniline	910.000	ug/kg	C	U	940.000	ug/kg	C	UJ	9400.000	ug/kg	C	UJ
4,6-Dinitro-2-methylphenol	910.000	ug/kg	C	U	940.000	ug/kg	C	U	9400.000	ug/kg	C	U
4-Bromophenyl phenyl ether	370.000	ug/kg	C	U	390.000	ug/kg	C	U	3900.000	ug/kg	C	U
4-Chloro-3-methylphenol	370.000	ug/kg	C	U	390.000	ug/kg	C	U	3900.000	ug/kg	C	U
4-Chlorophenylphenyl ether	370.000	ug/kg	C	U	390.000	ug/kg	C	U	3900.000	ug/kg	C	U
4-Methylphenol	370.000	ug/kg	C	U	390.000	ug/kg	C	U	3900.000	ug/kg	C	U
4-Nitroaniline	910.000	ug/kg	C	U	940.000	ug/kg	C	U	9400.000	ug/kg	C	U
4-Nitrophenol	910.000	ug/kg	C	U	940.000	ug/kg	C	U	9400.000	ug/kg	C	U
Acenaphthene	370.000	ug/kg	C	U	390.000	ug/kg	C	U	5800.000	ug/kg	C	-
Acenaphthylene	370.000	ug/kg	C	U	390.000	ug/kg	C	U	3900.000	ug/kg	C	U
Anthracene	370.000	ug/kg	C	U	390.000	ug/kg	C	U	9700.000	ug/kg	C	-
Benzo(a)anthracene	370.000	ug/kg	C	U	390.000	ug/kg	C	U	18000.000	ug/kg	C	-
Benzo(a)pyrene	370.000	ug/kg	C	U	390.000	ug/kg	C	U	13000.000	ug/kg	C	-
Benzo(b)fluoranthene	370.000	ug/kg	C	U	390.000	ug/kg	C	U	3900.000	ug/kg	C	U
Benzo(g,h,i)perylene	370.000	ug/kg	C	U	390.000	ug/kg	C	U	5800.000	ug/kg	C	-
Benzo(k)fluoranthene	370.000	ug/kg	C	U	390.000	ug/kg	C	U	25000.000	ug/kg	C	-
Butyl benzyl phthalate	370.000	ug/kg	C	U	390.000	ug/kg	C	U	3900.000	ug/kg	C	U
Carbazole	370.000	ug/kg	C	U	390.000	ug/kg	C	U	4200.000	ug/kg	C	-
Chrysene	370.000	ug/kg	C	U	390.000	ug/kg	C	U	18000.000	ug/kg	C	-
Di-n-butyl phthalate	52.000	ug/kg	C	U	390.000	ug/kg	C	U	3900.000	ug/kg	C	U
Di-n-octyl phthalate	370.000	ug/kg	C	U	55.000	ug/kg	C	J	3900.000	ug/kg	C	U
Dibenzo(a,h)anthracene	370.000	ug/kg	C	U	390.000	ug/kg	C	U	3000.000	ug/kg	C	J
Dibenzofuran	370.000	ug/kg	C	U	390.000	ug/kg	C	U	3000.000	ug/kg	C	J
Diethyl phthalate	370.000	ug/kg	C	U	390.000	ug/kg	C	U	3900.000	ug/kg	C	U
Dimethyl phthalate	370.000	ug/kg	C	U	390.000	ug/kg	C	U	3900.000	ug/kg	C	U
Fluoranthene	370.000	ug/kg	C	U	390.000	ug/kg	C	U	48000.000	ug/kg	C	-
Fluorene	370.000	ug/kg	C	U	390.000	ug/kg	C	U	6000.000	ug/kg	C	-
Hexachlorobenzene	370.000	ug/kg	C	U	390.000	ug/kg	C	U	3900.000	ug/kg	C	U
Hexachlorobutadiene	370.000	ug/kg	C	U	390.000	ug/kg	C	U	3900.000	ug/kg	C	U
Hexachlorocyclopentadiene	370.000	ug/kg	C	UJ	390.000	ug/kg	C	U	3900.000	ug/kg	C	U
Hexachloroethane	370.000	ug/kg	C	U	390.000	ug/kg	C	U	3900.000	ug/kg	C	U
Indeno(1,2,3-cd)pyrene	370.000	ug/kg	C	U	390.000	ug/kg	C	U	6500.000	ug/kg	C	-
Isophorone	370.000	ug/kg	C	U	390.000	ug/kg	C	U	3900.000	ug/kg	C	U
N-Nitroso-di-n-propylamine	370.000	ug/kg	C	U	390.000	ug/kg	C	U	3900.000	ug/kg	C	U
N-Nitrosodiphenylamine	370.000	ug/kg	C	U	390.000	ug/kg	C	U	3900.000	ug/kg	C	U
Naphthalene	370.000	ug/kg	C	U	390.000	ug/kg	C	U	1700.000	ug/kg	C	J
Nitrobenzene	370.000	ug/kg	C	U	390.000	ug/kg	C	U	3900.000	ug/kg	C	U
Pentachlorophenol	910.000	ug/kg	C	U	940.000	ug/kg	C	U	9400.000	ug/kg	C	U
Phenanthrene	370.000	ug/kg	C	U	390.000	ug/kg	C	U	48000.000	ug/kg	C	-
Phenol	370.000	ug/kg	C	U	390.000	ug/kg	C	U	3900.000	ug/kg	C	U
Pyrene	370.000	ug/kg	C	U	390.000	ug/kg	C	U	38000.000	ug/kg	C	-
bis(2-Chloroethoxy)methane	370.000	ug/kg	C	U	390.000	ug/kg	C	U	3900.000	ug/kg	C	U

TABLE C-6A
(Continued)

PHASE II - CHEMICAL PARAMETERS

BORING NUMBER	11036				11037				11041			
SAMPLE NUMBER	115380				115372				115389			
	17-19				17.5-20				0-2.5			
SAMPLING DATE	05/17/93				05/15/93				05/19/93			
CHEMICAL PARAMETERS	RESULTS	UNITS	L	VQ	RESULTS	UNITS	L	VQ	RESULTS	UNITS	L	VQ
Semivolatile Organics												
bis(2-Chloroethyl)ether	370.000	ug/kg	C	U	390.000	ug/kg	C	U	3900.000	ug/kg	C	U
bis(2-Chloroisopropyl) ether	370.000	ug/kg	C	U	390.000	ug/kg	C	U	3900.000	ug/kg	C	U
bis(2-Ethylhexyl) phthalate	1600.000	ug/kg	C	-	390.000	ug/kg	C	U	3900.000	ug/kg	C	U
p-Chloroaniline	370.000	ug/kg	C	U	390.000	ug/kg	C	UJ	3900.000	ug/kg	C	R
Pesticide Organics/PCBs												
4,4'-DDD	3.800	ug/kg	C	U	3.900	ug/kg	C	UJ	4.300	ug/kg	C	J
4,4'-DDE	3.800	ug/kg	C	UJ	3.900	ug/kg	C	U	3.900	ug/kg	C	UJ
4,4'-DDT	3.800	ug/kg	C	U	3.900	ug/kg	C	U	3.900	ug/kg	C	UJ
Aldrin	2.000	ug/kg	C	U	2.000	ug/kg	C	U	2.000	ug/kg	C	UJ
Aroclor-1016	38.000	ug/kg	C	U	39.000	ug/kg	C	U	39.000	ug/kg	C	U
Aroclor-1221	77.000	ug/kg	C	U	79.000	ug/kg	C	U	79.000	ug/kg	C	U
Aroclor-1232	38.000	ug/kg	C	U	39.000	ug/kg	C	U	39.000	ug/kg	C	U
Aroclor-1242	38.000	ug/kg	C	U	39.000	ug/kg	C	U	39.000	ug/kg	C	U
Aroclor-1248	38.000	ug/kg	C	U	39.000	ug/kg	C	U	39.000	ug/kg	C	U
Aroclor-1254	38.000	ug/kg	C	U	39.000	ug/kg	C	U	39.000	ug/kg	C	U
Aroclor-1260	38.000	ug/kg	C	U	39.000	ug/kg	C	U	39.000	ug/kg	C	U
Dieldrin	3.800	ug/kg	C	U	3.900	ug/kg	C	U	13.000	ug/kg	C	J
Endosulfan II	3.800	ug/kg	C	U	3.900	ug/kg	C	U	3.900	ug/kg	C	UJ
Endosulfan sulfate	3.800	ug/kg	C	U	3.900	ug/kg	C	U	3.900	ug/kg	C	UJ
Endosulfan-I	2.000	ug/kg	C	U	2.000	ug/kg	C	U	2.000	ug/kg	C	UJ
Endrin	3.800	ug/kg	C	U	3.900	ug/kg	C	U	3.900	ug/kg	C	UJ
Endrin aldehyde	3.800	ug/kg	C	U	3.900	ug/kg	C	UJ	180.000	ug/kg	C	J
Endrin ketone	3.800	ug/kg	C	U	3.900	ug/kg	C	U	3.900	ug/kg	C	UJ
Heptachlor	2.000	ug/kg	C	U	2.000	ug/kg	C	U	2.000	ug/kg	C	UJ
Heptachlor epoxide	2.000	ug/kg	C	U	2.000	ug/kg	C	U	2.000	ug/kg	C	UJ
Methoxychlor	20.000	ug/kg	C	U	20.000	ug/kg	C	U	20.000	ug/kg	C	UJ
Toxaphene	200.000	ug/kg	C	U	200.000	ug/kg	C	U	200.000	ug/kg	C	U
alpha-BHC	2.000	ug/kg	C	U	2.000	ug/kg	C	U	2.000	ug/kg	C	UJ
alpha-Chlordane	2.000	ug/kg	C	U	2.000	ug/kg	C	U	2.000	ug/kg	C	UJ
beta-BHC	2.000	ug/kg	C	U	2.000	ug/kg	C	U	2.000	ug/kg	C	UJ
delta-BHC	2.000	ug/kg	C	UJ	2.000	ug/kg	C	U	2.000	ug/kg	C	UJ
gamma-BHC (Lindane)	2.000	ug/kg	C	U	2.000	ug/kg	C	U	2.000	ug/kg	C	UJ
gamma-Chlordane	2.000	ug/kg	C	U	2.000	ug/kg	C	U	2.000	ug/kg	C	UJ

000181

TABLE C-6A
(Continued)

PHASE II - CHEMICAL PARAMETERS

BORING NUMBER	11040			11041			11040		
SAMPLE NUMBER	115392			115390			115393		
	2.5-5			12.5-15			12.5-15		
SAMPLING DATE	05/20/93			05/19/93			05/20/93		
CHEMICAL PARAMETERS	RESULTS	UNITS	L VQ	RESULTS	UNITS	L VQ	RESULTS	UNITS	L VQ
Inorganics									
Aluminum	14100.000	mg/kg	C -	8630.000	mg/kg	C -	13700.000	mg/kg	C -
Antimony	1.100	mg/kg	C UJ	1.200	mg/kg	C UJ	1.200	mg/kg	C UJ
Arsenic	5.900	mg/kg	C -	4.100	mg/kg	C -	10.400	mg/kg	C J
Barium	102.000	mg/kg	C -	56.100	mg/kg	C J	104.000	mg/kg	C -
Beryllium	0.690	mg/kg	C -	0.460	mg/kg	C U	0.650	mg/kg	C -
Cadmium	1.100	mg/kg	C U	1.200	mg/kg	C U	1.200	mg/kg	C U
Calcium	60400.000	mg/kg	C -	112000.000	mg/kg	C -	46100.000	mg/kg	C -
Chromium	15.100	mg/kg	C -	10.000	mg/kg	C J	16.700	mg/kg	C -
Cobalt	7.400	mg/kg	C -	6.300	mg/kg	C J	8.700	mg/kg	C -
Copper	18.200	mg/kg	C -	14.000	mg/kg	C -	21.800	mg/kg	C -
Cyanide	0.120	mg/kg	C UJ	0.120	mg/kg	C U	0.130	mg/kg	C UJ
Iron	22700.000	mg/kg	C -	16800.000	mg/kg	C -	26400.000	mg/kg	C -
Lead	12.600	mg/kg	C -	7.000	mg/kg	C -	13.400	mg/kg	C -
Magnesium	13800.000	mg/kg	C -	31000.000	mg/kg	C -	20500.000	mg/kg	C -
Manganese	632.000	mg/kg	C -	455.000	mg/kg	C J	497.000	mg/kg	C -
Mercury	0.100	mg/kg	C U	0.100	mg/kg	C U	0.130	mg/kg	C U
Molybdenum	6.400	mg/kg	C -	5.900	mg/kg	C J	8.600	mg/kg	C -
Nickel	19.600	mg/kg	C -	17.500	mg/kg	C -	26.700	mg/kg	C -
Potassium	1680.000	mg/kg	C -	1860.000	mg/kg	C -	1690.000	mg/kg	C -
Selenium	0.330	mg/kg	C U	0.410	mg/kg	C UJ	0.500	mg/kg	C U
Silicon	981.000	mg/kg	C -	472.000	mg/kg	C -	712.000	mg/kg	C -
Silver	6.300	mg/kg	C -	4.300	mg/kg	C J	7.700	mg/kg	C -
Sodium	162.000	mg/kg	C -	158.000	mg/kg	C -	133.000	mg/kg	C -
Thallium	0.330	mg/kg	C U	0.410	mg/kg	C U	0.500	mg/kg	C U
Vanadium	35.800	mg/kg	C -	23.600	mg/kg	C J	37.500	mg/kg	C -
Zinc	63.000	mg/kg	C -	43.200	mg/kg	C J	65.200	mg/kg	C -
Volatile Organics									
1,1,1-Trichloroethane	12.000	ug/kg	C U	11.000	ug/kg	C U	13.000	ug/kg	C U
1,1,2,2-Tetrachloroethane	12.000	ug/kg	C U	11.000	ug/kg	C U	13.000	ug/kg	C U
1,1,2-Trichloroethane	12.000	ug/kg	C U	11.000	ug/kg	C U	13.000	ug/kg	C U
1,1-Dichloroethane	12.000	ug/kg	C U	11.000	ug/kg	C UJ	13.000	ug/kg	C U
1,1-Dichloroethene	12.000	ug/kg	C U	11.000	ug/kg	C U	13.000	ug/kg	C U
1,2-Dichloroethane	12.000	ug/kg	C U	11.000	ug/kg	C U	13.000	ug/kg	C U
1,2-Dichloroethene	12.000	ug/kg	C U	11.000	ug/kg	C U	13.000	ug/kg	C U
1,2-Dichloropropane	12.000	ug/kg	C U	11.000	ug/kg	C U	13.000	ug/kg	C U
2-Butanone	12.000	ug/kg	C U	11.000	ug/kg	C UJ	13.000	ug/kg	C U
2-Hexanone	12.000	ug/kg	C U	11.000	ug/kg	C U	13.000	ug/kg	C U
4-Methyl-2-pentanone	12.000	ug/kg	C U	11.000	ug/kg	C U	13.000	ug/kg	C U
Acetone	12.000	ug/kg	C U	11.000	ug/kg	C U	13.000	ug/kg	C U
Benzene	12.000	ug/kg	C U	11.000	ug/kg	C U	13.000	ug/kg	C U

TABLE C-6A
(Continued)

PHASE II - CHEMICAL PARAMETERS

BORING NUMBER	11040				11041				11040			
SAMPLE NUMBER	115392				115390				115393			
	2.5-5				12.5-15				12.5-15			
SAMPLING DATE	05/20/93				05/19/93				05/20/93			
CHEMICAL PARAMETERS	RESULTS	UNITS	L	VQ	RESULTS	UNITS	L	VQ	RESULTS	UNITS	L	VQ
Volatile Organics												
Bromodichloromethane	12.000	ug/kg	C	U	11.000	ug/kg	C	U	13.000	ug/kg	C	U
Bromoform	12.000	ug/kg	C	U	11.000	ug/kg	C	U	13.000	ug/kg	C	U
Bromomethane	12.000	ug/kg	C	U	11.000	ug/kg	C	U	13.000	ug/kg	C	U
Carbon Tetrachloride	12.000	ug/kg	C	U	11.000	ug/kg	C	U	13.000	ug/kg	C	U
Carbon disulfide	12.000	ug/kg	C	U	11.000	ug/kg	C	U	13.000	ug/kg	C	U
Chlorobenzene	12.000	ug/kg	C	U	11.000	ug/kg	C	U	13.000	ug/kg	C	U
Chloroethane	12.000	ug/kg	C	U	11.000	ug/kg	C	UJ	13.000	ug/kg	C	U
Chloroform	12.000	ug/kg	C	U	11.000	ug/kg	C	U	13.000	ug/kg	C	U
Chloromethane	12.000	ug/kg	C	U	11.000	ug/kg	C	UJ	13.000	ug/kg	C	U
Dibromochloromethane	12.000	ug/kg	C	U	11.000	ug/kg	C	U	13.000	ug/kg	C	U
Ethylbenzene	12.000	ug/kg	C	U	11.000	ug/kg	C	U	13.000	ug/kg	C	U
Methylene chloride	12.000	ug/kg	C	U	11.000	ug/kg	C	U	13.000	ug/kg	C	U
Styrene	12.000	ug/kg	C	U	11.000	ug/kg	C	U	13.000	ug/kg	C	U
Tetrachloroethene	12.000	ug/kg	C	U	11.000	ug/kg	C	U	13.000	ug/kg	C	U
Toluene	12.000	ug/kg	C	U	2.000	ug/kg	C	J	13.000	ug/kg	C	U
Trichloroethene	12.000	ug/kg	C	U	11.000	ug/kg	C	U	13.000	ug/kg	C	U
Vinyl Acetate	12.000	ug/kg	C	U	11.000	ug/kg	C	U	13.000	ug/kg	C	U
Vinyl chloride	12.000	ug/kg	C	U	11.000	ug/kg	C	U	13.000	ug/kg	C	U
Xylenes, Total	12.000	ug/kg	C	U	11.000	ug/kg	C	U	13.000	ug/kg	C	U
cis-1,3-Dichloropropene	12.000	ug/kg	C	U	11.000	ug/kg	C	U	13.000	ug/kg	C	U
trans-1,3-Dichloropropene	12.000	ug/kg	C	U	11.000	ug/kg	C	U	13.000	ug/kg	C	U
Semivolatile Organics												
1,2,4-Trichlorobenzene	390.000	ug/kg	C	U	390.000	ug/kg	C	U	430.000	ug/kg	C	U
1,2-Dichlorobenzene	390.000	ug/kg	C	U	390.000	ug/kg	C	U	430.000	ug/kg	C	U
1,3-Dichlorobenzene	390.000	ug/kg	C	U	390.000	ug/kg	C	U	430.000	ug/kg	C	U
1,4-Dichlorobenzene	390.000	ug/kg	C	U	390.000	ug/kg	C	U	430.000	ug/kg	C	U
2,4,5-Trichlorophenol	950.000	ug/kg	C	U	940.000	ug/kg	C	U	1000.000	ug/kg	C	U
2,4,6-Trichlorophenol	390.000	ug/kg	C	U	390.000	ug/kg	C	U	430.000	ug/kg	C	U
2,4-Dichlorophenol	390.000	ug/kg	C	U	390.000	ug/kg	C	U	430.000	ug/kg	C	U
2,4-Dimethylphenol	390.000	ug/kg	C	U	390.000	ug/kg	C	U	430.000	ug/kg	C	U
2,4-Dinitrophenol	950.000	ug/kg	C	UJ	940.000	ug/kg	C	U	1000.000	ug/kg	C	UJ
2,4-Dinitrotoluene	390.000	ug/kg	C	U	390.000	ug/kg	C	U	430.000	ug/kg	C	U
2,6-Dinitrotoluene	390.000	ug/kg	C	U	390.000	ug/kg	C	U	430.000	ug/kg	C	U
2-Benzyl-4-chlorophenol	390.000	ug/kg	C	UJ	NA				430.000	ug/kg	C	UJ
2-Chloronaphthalene	390.000	ug/kg	C	U	390.000	ug/kg	C	U	430.000	ug/kg	C	U
2-Chlorophenol	390.000	ug/kg	C	U	390.000	ug/kg	C	U	430.000	ug/kg	C	U
2-Methylnaphthalene	390.000	ug/kg	C	U	390.000	ug/kg	C	U	430.000	ug/kg	C	U
2-Methylphenol	390.000	ug/kg	C	U	390.000	ug/kg	C	U	430.000	ug/kg	C	U
2-Nitroaniline	950.000	ug/kg	C	U	940.000	ug/kg	C	U	1000.000	ug/kg	C	U
2-Nitrophenol	390.000	ug/kg	C	U	390.000	ug/kg	C	U	430.000	ug/kg	C	U

TABLE C-6A
(Continued)

PHASE II - CHEMICAL PARAMETERS

BORING NUMBER	11040				11041				11040			
SAMPLE NUMBER	115392				115390				115393			
	2.5-5				12.5-15				12.5-15			
SAMPLING DATE	05/20/93				05/19/93				05/20/93			
CHEMICAL PARAMETERS	RESULTS	UNITS	L	VQ	RESULTS	UNITS	L	VQ	RESULTS	UNITS	L	VQ
Semivolatile Organics												
3,3'-Dichlorobenzidine	390.000	ug/kg	C	U	390.000	ug/kg	C	R	430.000	ug/kg	C	U
3-Nitroaniline	950.000	ug/kg	C	U	940.000	ug/kg	C	UJ	1000.000	ug/kg	C	U
4,6-Dinitro-2-methylphenol	950.000	ug/kg	C	U	940.000	ug/kg	C	U	1000.000	ug/kg	C	U
4-Bromophenyl phenyl ether	390.000	ug/kg	C	U	390.000	ug/kg	C	U	430.000	ug/kg	C	U
4-Chloro-3-methylphenol	390.000	ug/kg	C	U	390.000	ug/kg	C	U	430.000	ug/kg	C	U
4-Chlorophenylphenyl ether	390.000	ug/kg	C	U	390.000	ug/kg	C	U	430.000	ug/kg	C	U
4-Methylphenol	390.000	ug/kg	C	U	390.000	ug/kg	C	U	430.000	ug/kg	C	U
4-Nitroaniline	950.000	ug/kg	C	U	940.000	ug/kg	C	U	1000.000	ug/kg	C	U
4-Nitrophenol	950.000	ug/kg	C	U	940.000	ug/kg	C	U	1000.000	ug/kg	C	U
Acenaphthene	390.000	ug/kg	C	U	390.000	ug/kg	C	U	430.000	ug/kg	C	U
Acenaphthylene	390.000	ug/kg	C	U	390.000	ug/kg	C	U	430.000	ug/kg	C	U
Anthracene	100.000	ug/kg	C	J	390.000	ug/kg	C	U	430.000	ug/kg	C	U
Benzo(a)anthracene	350.000	ug/kg	C	J	390.000	ug/kg	C	U	430.000	ug/kg	C	U
Benzo(a)pyrene	320.000	ug/kg	C	J	390.000	ug/kg	C	U	430.000	ug/kg	C	U
Benzo(b)fluoranthene	290.000	ug/kg	C	J	390.000	ug/kg	C	U	430.000	ug/kg	C	U
Benzo(g,h,i)perylene	190.000	ug/kg	C	J	390.000	ug/kg	C	U	430.000	ug/kg	C	U
Benzo(k)fluoranthene	290.000	ug/kg	C	J	390.000	ug/kg	C	U	430.000	ug/kg	C	U
Benzoic acid	1900.000	ug/kg	C	UJ	NA				2100.000	ug/kg	C	UJ
Benzyl alcohol	390.000	ug/kg	C	R	NA				430.000	ug/kg	C	R
Butyl benzyl phthalate	390.000	ug/kg	C	U	390.000	ug/kg	C	U	430.000	ug/kg	C	U
Carbazole	58.000	ug/kg	C	J	390.000	ug/kg	C	U	430.000	ug/kg	C	U
Chrysene	370.000	ug/kg	C	J	390.000	ug/kg	C	U	430.000	ug/kg	C	U
Di-n-butyl phthalate	390.000	ug/kg	C	U	390.000	ug/kg	C	U	430.000	ug/kg	C	U
Di-n-octyl phthalate	390.000	ug/kg	C	U	390.000	ug/kg	C	U	430.000	ug/kg	C	U
Dibenzo(a,h)anthracene	96.000	ug/kg	C	J	390.000	ug/kg	C	U	430.000	ug/kg	C	U
Dibenzofuran	390.000	ug/kg	C	U	390.000	ug/kg	C	U	430.000	ug/kg	C	U
Diethyl phthalate	390.000	ug/kg	C	U	390.000	ug/kg	C	U	430.000	ug/kg	C	U
Dimethyl phthalate	390.000	ug/kg	C	U	390.000	ug/kg	C	U	430.000	ug/kg	C	U
Fluoranthene	770.000	ug/kg	C	-	390.000	ug/kg	C	U	430.000	ug/kg	C	U
Fluorene	390.000	ug/kg	C	U	390.000	ug/kg	C	U	430.000	ug/kg	C	U
Hexachlorobenzene	390.000	ug/kg	C	U	390.000	ug/kg	C	U	430.000	ug/kg	C	U
Hexachlorobutadiene	390.000	ug/kg	C	U	390.000	ug/kg	C	U	430.000	ug/kg	C	U
Hexachlorocyclopentadiene	390.000	ug/kg	C	U	390.000	ug/kg	C	U	430.000	ug/kg	C	U
Hexachloroethane	390.000	ug/kg	C	U	390.000	ug/kg	C	U	430.000	ug/kg	C	U
Indeno(1,2,3-cd)pyrene	200.000	ug/kg	C	J	390.000	ug/kg	C	U	430.000	ug/kg	C	U
Isophorone	390.000	ug/kg	C	U	390.000	ug/kg	C	U	430.000	ug/kg	C	U
N-Nitroso-di-n-propylamine	390.000	ug/kg	C	U	390.000	ug/kg	C	U	430.000	ug/kg	C	U
N-Nitrosodimethylamine	390.000	ug/kg	C	U	NA				430.000	ug/kg	C	U
N-Nitrosodiphenylamine	390.000	ug/kg	C	U	390.000	ug/kg	C	U	430.000	ug/kg	C	U
Naphthalene	390.000	ug/kg	C	U	390.000	ug/kg	C	U	430.000	ug/kg	C	U
Nitrobenzene	390.000	ug/kg	C	U	390.000	ug/kg	C	U	430.000	ug/kg	C	U
Pentachlorophenol	950.000	ug/kg	C	U	940.000	ug/kg	C	U	1000.000	ug/kg	C	U

TABLE C-6A
(Continued)

PHASE II - CHEMICAL PARAMETERS

BORING NUMBER	11040				11041				11040			
SAMPLE NUMBER	115392				115390				115393			
	2.5-5				12.5-15				12.5-15			
SAMPLING DATE	05/20/93				05/19/93				05/20/93			
CHEMICAL PARAMETERS	RESULTS	UNITS	L	VQ	RESULTS	UNITS	L	VQ	RESULTS	UNITS	L	VQ
Semivolatile Organics												
Phenanthrene	440.000	ug/kg	C	-	390.000	ug/kg	C	U	430.000	ug/kg	C	U
Phenol	390.000	ug/kg	C	U	390.000	ug/kg	C	U	430.000	ug/kg	C	U
Pyrene	640.000	ug/kg	C	-	390.000	ug/kg	C	U	430.000	ug/kg	C	U
Tributyl phosphate	390.000	ug/kg	C	U	NA				430.000	ug/kg	C	U
bis(2-Chloroethoxy)methane	390.000	ug/kg	C	U	390.000	ug/kg	C	U	430.000	ug/kg	C	U
bis(2-Chloroethyl)ether	390.000	ug/kg	C	U	390.000	ug/kg	C	U	430.000	ug/kg	C	U
bis(2-Chloroisopropyl) ether	390.000	ug/kg	C	U	390.000	ug/kg	C	U	430.000	ug/kg	C	U
bis(2-Ethylhexyl) phthalate	48.000	ug/kg	C	J	390.000	ug/kg	C	U	430.000	ug/kg	C	U
p-Chloroaniline	390.000	ug/kg	C	U	390.000	ug/kg	C	R	430.000	ug/kg	C	U
Pesticide Organics/PCBs												
4,4'-DDD	4.000	ug/kg	C	UJ	3.800	ug/kg	C	UJ	4.300	ug/kg	C	UJ
4,4'-DDE	4.000	ug/kg	C	U	3.800	ug/kg	C	UJ	4.300	ug/kg	C	U
4,4'-DDT	4.000	ug/kg	C	U	3.800	ug/kg	C	UJ	4.300	ug/kg	C	U
Aldrin	2.000	ug/kg	C	U	2.000	ug/kg	C	UJ	2.200	ug/kg	C	U
Aroclor-1016	40.000	ug/kg	C	U	38.000	ug/kg	C	U	43.000	ug/kg	C	U
Aroclor-1221	81.000	ug/kg	C	U	78.000	ug/kg	C	U	88.000	ug/kg	C	U
Aroclor-1232	40.000	ug/kg	C	U	38.000	ug/kg	C	U	43.000	ug/kg	C	U
Aroclor-1242	40.000	ug/kg	C	U	38.000	ug/kg	C	U	43.000	ug/kg	C	U
Aroclor-1248	40.000	ug/kg	C	U	38.000	ug/kg	C	U	43.000	ug/kg	C	U
Aroclor-1254	40.000	ug/kg	C	U	38.000	ug/kg	C	U	43.000	ug/kg	C	U
Aroclor-1260	40.000	ug/kg	C	U	38.000	ug/kg	C	U	43.000	ug/kg	C	U
Dieldrin	4.000	ug/kg	C	U	3.800	ug/kg	C	UJ	4.300	ug/kg	C	U
Endosulfan II	4.000	ug/kg	C	U	3.800	ug/kg	C	UJ	4.300	ug/kg	C	U
Endosulfan sulfate	4.000	ug/kg	C	U	3.800	ug/kg	C	UJ	4.300	ug/kg	C	U
Endosulfan-I	2.000	ug/kg	C	U	2.000	ug/kg	C	UJ	2.200	ug/kg	C	U
Endrin	4.000	ug/kg	C	U	3.800	ug/kg	C	UJ	4.300	ug/kg	C	U
Endrin aldehyde	4.000	ug/kg	C	UJ	3.800	ug/kg	C	UJ	4.300	ug/kg	C	UJ
Endrin ketone	4.000	ug/kg	C	U	3.800	ug/kg	C	UJ	4.300	ug/kg	C	U
Heptachlor	2.000	ug/kg	C	U	2.000	ug/kg	C	UJ	2.200	ug/kg	C	U
Heptachlor epoxide	2.000	ug/kg	C	U	2.000	ug/kg	C	UJ	2.200	ug/kg	C	U
Methoxychlor	20.000	ug/kg	C	U	20.000	ug/kg	C	UJ	22.000	ug/kg	C	U
Toxaphene	200.000	ug/kg	C	U	200.000	ug/kg	C	U	220.000	ug/kg	C	U
alpha-BHC	2.000	ug/kg	C	U	2.000	ug/kg	C	UJ	2.200	ug/kg	C	U
alpha-Chlordane	2.000	ug/kg	C	U	2.000	ug/kg	C	UJ	2.200	ug/kg	C	U
beta-BHC	2.000	ug/kg	C	U	2.000	ug/kg	C	UJ	2.200	ug/kg	C	U
delta-BHC	2.000	ug/kg	C	U	2.000	ug/kg	C	UJ	2.200	ug/kg	C	U
gamma-BHC (Lindane)	2.000	ug/kg	C	U	2.000	ug/kg	C	UJ	2.200	ug/kg	C	U
gamma-Chlordane	2.000	ug/kg	C	U	2.000	ug/kg	C	UJ	2.200	ug/kg	C	U

TABLE C-6A
(Continued)

PHASE II - CHEMICAL PARAMETERS

BORING NUMBER	1982			1982			1983		
SAMPLE NUMBER	111484			111487			111476		
	0-2.5			7.5-10			1.5-2.5		
SAMPLING DATE	05/06/93			05/06/93			05/03/93		
CHEMICAL PARAMETERS	RESULTS	UNITS	L VQ	RESULTS	UNITS	L VQ	RESULTS	UNITS	L VQ
Inorganics									
Aluminum	15200.000	mg/kg	C -	6490.000	mg/kg	C -	12300.000	mg/kg	C -
Antimony	0.220	mg/kg	C UJ	0.220	mg/kg	C UJ	0.310	mg/kg	C R
Arsenic	7.500	mg/kg	C -	5.500	mg/kg	C -	5.900	mg/kg	C J
Barium	104.000	mg/kg	C J	65.100	mg/kg	C J	87.400	mg/kg	C -
Beryllium	0.960	mg/kg	C -	0.390	mg/kg	C -	1.700	mg/kg	C -
Cadmium	1.300	mg/kg	C -	0.700	mg/kg	C -	0.990	mg/kg	C -
Calcium	33600.000	mg/kg	C J	111000.000	mg/kg	C J	70900.000	mg/kg	C -
Chromium	18.100	mg/kg	C -	9.900	mg/kg	C -	15.100	mg/kg	C -
Cobalt	9.900	mg/kg	C -	11.100	mg/kg	C -	9.200	mg/kg	C -
Copper	19.400	mg/kg	C J	13.600	mg/kg	C J	19.400	mg/kg	C -
Cyanide	0.110	mg/kg	C R	0.450	mg/kg	C R	0.120	mg/kg	C U
Iron	24000.000	mg/kg	C J	15100.000	mg/kg	C J	20100.000	mg/kg	C -
Lead	12.000	mg/kg	C J	8.200	mg/kg	C J	14.400	mg/kg	C J
Magnesium	7520.000	mg/kg	C J	32400.000	mg/kg	C J	16400.000	mg/kg	C J
Manganese	516.000	mg/kg	C J	460.000	mg/kg	C J	642.000	mg/kg	C -
Mercury	0.090	mg/kg	C UJ	0.090	mg/kg	C UJ	0.110	mg/kg	C U
Molybdenum	1.900	mg/kg	C U	2.500	mg/kg	C U	0.860	mg/kg	C -
Nickel	23.000	mg/kg	C -	17.300	mg/kg	C -	19.500	mg/kg	C -
Potassium	1470.000	mg/kg	C J	1370.000	mg/kg	C J	1720.000	mg/kg	C J
Selenium	0.220	mg/kg	C UJ	0.220	mg/kg	C UJ	0.240	mg/kg	C UJ
Silicon	607.000	mg/kg	C -	690.000	mg/kg	C -	808.000	mg/kg	C -
Silver	0.440	mg/kg	C U	0.450	mg/kg	C U	0.480	mg/kg	C U
Sodium	90.800	mg/kg	C -	179.000	mg/kg	C -	173.000	mg/kg	C J
Thallium	0.220	mg/kg	C U	0.220	mg/kg	C U	0.240	mg/kg	C U
Vanadium	28.200	mg/kg	C J	17.300	mg/kg	C J	26.600	mg/kg	C J
Zinc	59.000	mg/kg	C J	40.500	mg/kg	C J	56.300	mg/kg	C -
Volatile Organics									
1,1,1-Trichloroethane	12.000	ug/kg	C U	11.000	ug/kg	C U	12.000	ug/kg	C U
1,1,2,2-Tetrachloroethane	12.000	ug/kg	C U	11.000	ug/kg	C U	12.000	ug/kg	C U
1,1,2-Trichloroethane	12.000	ug/kg	C U	11.000	ug/kg	C U	12.000	ug/kg	C U
1,1-Dichloroethane	12.000	ug/kg	C U	11.000	ug/kg	C U	12.000	ug/kg	C U
1,1-Dichloroethene	12.000	ug/kg	C U	11.000	ug/kg	C U	12.000	ug/kg	C U
1,2-Dichloroethane	12.000	ug/kg	C U	11.000	ug/kg	C U	12.000	ug/kg	C U
1,2-Dichloroethene	12.000	ug/kg	C U	11.000	ug/kg	C U	12.000	ug/kg	C U
1,2-Dichloropropane	12.000	ug/kg	C U	11.000	ug/kg	C U	12.000	ug/kg	C U
2-Butanone	12.000	ug/kg	C U	11.000	ug/kg	C U	12.000	ug/kg	C U
2-Hexanone	12.000	ug/kg	C U	11.000	ug/kg	C U	12.000	ug/kg	C U
4-Methyl-2-pentanone	12.000	ug/kg	C U	11.000	ug/kg	C U	12.000	ug/kg	C U
Acetone	12.000	ug/kg	C UJ	11.000	ug/kg	C U	12.000	ug/kg	C U
Benzene	12.000	ug/kg	C U	11.000	ug/kg	C U	12.000	ug/kg	C U

TABLE C-6A
(Continued)

PHASE II - CHEMICAL PARAMETERS

BORING NUMBER	1982				1982				1983			
SAMPLE NUMBER	111484				111487				111476			
	0-2.5				7.5-10				1.5-2.5			
SAMPLING DATE	05/06/93				05/06/93				05/03/93			
CHEMICAL PARAMETERS	RESULTS	UNITS	L	VQ	RESULTS	UNITS	L	VQ	RESULTS	UNITS	L	VQ
Volatile Organics												
Bromodichloromethane	12.000	ug/kg	C	U	11.000	ug/kg	C	U	12.000	ug/kg	C	U
Bromoform	12.000	ug/kg	C	U	11.000	ug/kg	C	U	12.000	ug/kg	C	U
Bromomethane	12.000	ug/kg	C	U	11.000	ug/kg	C	U	12.000	ug/kg	C	U
Carbon Tetrachloride	12.000	ug/kg	C	U	11.000	ug/kg	C	U	12.000	ug/kg	C	U
Carbon disulfide	12.000	ug/kg	C	U	11.000	ug/kg	C	U	12.000	ug/kg	C	U
Chlorobenzene	12.000	ug/kg	C	U	11.000	ug/kg	C	U	12.000	ug/kg	C	U
Chloroethane	12.000	ug/kg	C	U	11.000	ug/kg	C	U	12.000	ug/kg	C	U
Chloroform	12.000	ug/kg	C	U	11.000	ug/kg	C	U	12.000	ug/kg	C	U
Chloromethane	12.000	ug/kg	C	UJ	11.000	ug/kg	C	UJ	12.000	ug/kg	C	U
Dibromochloromethane	12.000	ug/kg	C	U	11.000	ug/kg	C	U	12.000	ug/kg	C	U
Ethylbenzene	12.000	ug/kg	C	U	11.000	ug/kg	C	U	12.000	ug/kg	C	U
Methylene chloride	22.000	ug/kg	C	U	11.000	ug/kg	C	U	12.000	ug/kg	C	U
Styrene	12.000	ug/kg	C	U	11.000	ug/kg	C	U	12.000	ug/kg	C	U
Tetrachloroethene	12.000	ug/kg	C	U	11.000	ug/kg	C	U	12.000	ug/kg	C	U
Toluene	2.000	ug/kg	C	J	1.000	ug/kg	C	J	12.000	ug/kg	C	U
Trichloroethene	12.000	ug/kg	C	U	11.000	ug/kg	C	U	12.000	ug/kg	C	U
Vinyl Acetate	12.000	ug/kg	C	U	11.000	ug/kg	C	U	12.000	ug/kg	C	U
Vinyl chloride	12.000	ug/kg	C	U	11.000	ug/kg	C	U	12.000	ug/kg	C	U
Xylenes, Total	12.000	ug/kg	C	U	11.000	ug/kg	C	U	12.000	ug/kg	C	U
cis-1,3-Dichloropropene	12.000	ug/kg	C	U	11.000	ug/kg	C	U	12.000	ug/kg	C	U
trans-1,3-Dichloropropene	12.000	ug/kg	C	U	11.000	ug/kg	C	U	12.000	ug/kg	C	UJ
Semivolatile Organics												
1,2,4-Trichlorobenzene	390.000	ug/kg	C	U	370.000	ug/kg	C	U	400.000	ug/kg	C	U
1,2-Dichlorobenzene	390.000	ug/kg	C	U	370.000	ug/kg	C	U	400.000	ug/kg	C	U
1,3-Dichlorobenzene	390.000	ug/kg	C	U	370.000	ug/kg	C	U	400.000	ug/kg	C	U
1,4-Dichlorobenzene	390.000	ug/kg	C	U	370.000	ug/kg	C	U	400.000	ug/kg	C	U
2,4,5-Trichlorophenol	940.000	ug/kg	C	U	900.000	ug/kg	C	U	980.000	ug/kg	C	U
2,4,6-Trichlorophenol	390.000	ug/kg	C	U	370.000	ug/kg	C	U	400.000	ug/kg	C	U
2,4-Dichlorophenol	390.000	ug/kg	C	U	370.000	ug/kg	C	U	400.000	ug/kg	C	U
2,4-Dimethylphenol	390.000	ug/kg	C	U	370.000	ug/kg	C	U	400.000	ug/kg	C	U
2,4-Dinitrophenol	940.000	ug/kg	C	UJ	900.000	ug/kg	C	UJ	980.000	ug/kg	C	U
2,4-Dinitrotoluene	390.000	ug/kg	C	U	370.000	ug/kg	C	U	400.000	ug/kg	C	U
2,6-Dinitrotoluene	390.000	ug/kg	C	U	370.000	ug/kg	C	U	400.000	ug/kg	C	U
2-Chloronaphthalene	390.000	ug/kg	C	U	370.000	ug/kg	C	U	400.000	ug/kg	C	U
2-Chlorophenol	390.000	ug/kg	C	U	370.000	ug/kg	C	U	400.000	ug/kg	C	U
2-Methylnaphthalene	390.000	ug/kg	C	U	370.000	ug/kg	C	U	400.000	ug/kg	C	U
2-Methylphenol	390.000	ug/kg	C	U	370.000	ug/kg	C	U	400.000	ug/kg	C	U
2-Nitroaniline	940.000	ug/kg	C	U	900.000	ug/kg	C	U	980.000	ug/kg	C	U
2-Nitrophenol	390.000	ug/kg	C	U	370.000	ug/kg	C	U	400.000	ug/kg	C	U
3,3'-Dichlorobenzidine	390.000	ug/kg	C	UJ	370.000	ug/kg	C	UJ	400.000	ug/kg	C	U

000482

TABLE C-6A
(Continued)

PHASE II - CHEMICAL PARAMETERS

BORING NUMBER	1982				1982				1983			
SAMPLE NUMBER	111484				111487				111476			
	0-2.5				7.5-10				1.5-2.5			
SAMPLING DATE	05/06/93				05/06/93				05/03/93			
CHEMICAL PARAMETERS	RESULTS	UNITS	L	VQ	RESULTS	UNITS	L	VQ	RESULTS	UNITS	L	VQ
Semivolatile Organics												
3-Nitroaniline	940.000	ug/kg	C	UJ	900.000	ug/kg	C	UJ	980.000	ug/kg	C	U
4,6-Dinitro-2-methylphenol	940.000	ug/kg	C	U	900.000	ug/kg	C	U	980.000	ug/kg	C	U
4-Bromophenyl phenyl ether	390.000	ug/kg	C	U	370.000	ug/kg	C	U	400.000	ug/kg	C	U
4-Chloro-3-methylphenol	390.000	ug/kg	C	U	370.000	ug/kg	C	U	400.000	ug/kg	C	U
4-Chlorophenylphenyl ether	390.000	ug/kg	C	U	370.000	ug/kg	C	U	400.000	ug/kg	C	U
4-Methylphenol	390.000	ug/kg	C	U	370.000	ug/kg	C	U	400.000	ug/kg	C	U
4-Nitroaniline	940.000	ug/kg	C	UJ	900.000	ug/kg	C	UJ	980.000	ug/kg	C	U
4-Nitrophenol	940.000	ug/kg	C	U	900.000	ug/kg	C	U	980.000	ug/kg	C	U
Acenaphthene	55.000	ug/kg	C	J	370.000	ug/kg	C	U	400.000	ug/kg	C	U
Acenaphthylene	390.000	ug/kg	C	U	370.000	ug/kg	C	U	400.000	ug/kg	C	U
Anthracene	77.000	ug/kg	C	J	370.000	ug/kg	C	U	400.000	ug/kg	C	U
Benzo(a)anthracene	170.000	ug/kg	C	J	370.000	ug/kg	C	U	49.000	ug/kg	C	J
Benzo(a)pyrene	120.000	ug/kg	C	J	370.000	ug/kg	C	U	47.000	ug/kg	C	J
Benzo(b)fluoranthene	180.000	ug/kg	C	J	370.000	ug/kg	C	U	49.000	ug/kg	C	J
Benzo(g,h,i)perylene	86.000	ug/kg	C	J	370.000	ug/kg	C	U	400.000	ug/kg	C	U
Benzo(k)fluoranthene	120.000	ug/kg	C	J	370.000	ug/kg	C	U	56.000	ug/kg	C	J
Benzoic acid	NA				NA				2000.000	ug/kg	C	U
Benzyl alcohol	NA				NA				400.000	ug/kg	C	U
Butyl benzyl phthalate	390.000	ug/kg	C	U	370.000	ug/kg	C	U	400.000	ug/kg	C	U
Carbazole	390.000	ug/kg	C	U	370.000	ug/kg	C	U	400.000	ug/kg	C	U
Chrysene	200.000	ug/kg	C	J	370.000	ug/kg	C	U	400.000	ug/kg	C	U
Di-n-butyl phthalate	390.000	ug/kg	C	U	370.000	ug/kg	C	U	400.000	ug/kg	C	U
Di-n-octyl phthalate	390.000	ug/kg	C	U	370.000	ug/kg	C	U	400.000	ug/kg	C	U
Dibenzo(a,h)anthracene	40.000	ug/kg	C	J	370.000	ug/kg	C	U	400.000	ug/kg	C	U
Dibenzofuran	390.000	ug/kg	C	U	370.000	ug/kg	C	U	400.000	ug/kg	C	U
Diethyl phthalate	390.000	ug/kg	C	U	370.000	ug/kg	C	U	400.000	ug/kg	C	U
Dimethyl phthalate	390.000	ug/kg	C	U	370.000	ug/kg	C	U	400.000	ug/kg	C	U
Fluoranthene	480.000	ug/kg	C	-	370.000	ug/kg	C	U	130.000	ug/kg	C	J
Fluorene	46.000	ug/kg	C	J	370.000	ug/kg	C	U	400.000	ug/kg	C	U
Hexachlorobenzene	390.000	ug/kg	C	U	370.000	ug/kg	C	U	400.000	ug/kg	C	U
Hexachlorobutadiene	390.000	ug/kg	C	U	370.000	ug/kg	C	U	400.000	ug/kg	C	U
Hexachlorocyclopentadiene	390.000	ug/kg	C	U	370.000	ug/kg	C	U	400.000	ug/kg	C	U
Hexachloroethane	390.000	ug/kg	C	U	370.000	ug/kg	C	U	400.000	ug/kg	C	U
Indeno(1,2,3-cd)pyrene	91.000	ug/kg	C	J	370.000	ug/kg	C	U	400.000	ug/kg	C	U
Isophorone	390.000	ug/kg	C	U	370.000	ug/kg	C	U	400.000	ug/kg	C	U
N-Nitroso-di-n-propylamine	390.000	ug/kg	C	U	370.000	ug/kg	C	U	400.000	ug/kg	C	U
N-Nitrosodiphenylamine	390.000	ug/kg	C	U	370.000	ug/kg	C	U	400.000	ug/kg	C	U
Naphthalene	390.000	ug/kg	C	U	370.000	ug/kg	C	U	400.000	ug/kg	C	U
Nitrobenzene	390.000	ug/kg	C	U	370.000	ug/kg	C	U	400.000	ug/kg	C	U
Pentachlorophenol	940.000	ug/kg	C	U	900.000	ug/kg	C	U	980.000	ug/kg	C	U
Phenanthrene	410.000	ug/kg	C	-	370.000	ug/kg	C	U	66.000	ug/kg	C	J
Phenol	390.000	ug/kg	C	U	370.000	ug/kg	C	U	400.000	ug/kg	C	U

TABLE C-6A
(Continued)

PHASE II - CHEMICAL PARAMETERS

BORING NUMBER	1982			1982			1983		
SAMPLE NUMBER	111484			111487			111476		
	0-2.5			7.5-10			1.5-2.5		
SAMPLING DATE	05/06/93			05/06/93			05/03/93		
CHEMICAL PARAMETERS	RESULTS	UNITS L	VQ	RESULTS	UNITS L	VQ	RESULTS	UNITS L	VQ
Semivolatile Organics									
Pyrene	350.000	ug/kg C	J	370.000	ug/kg C	U	120.000	ug/kg C	J
bis(2-Chloroethoxy)methane	390.000	ug/kg C	U	370.000	ug/kg C	U	400.000	ug/kg C	U
bis(2-Chloroethyl)ether	390.000	ug/kg C	U	370.000	ug/kg C	U	400.000	ug/kg C	U
bis(2-Chloroisopropyl) ether	390.000	ug/kg C	U	370.000	ug/kg C	U	400.000	ug/kg C	U
bis(2-Ethylhexyl) phthalate	260.000	ug/kg C	J	250.000	ug/kg C	J	3200.000	ug/kg C	-
p-Chloroaniline	390.000	ug/kg C	U	370.000	ug/kg C	U	400.000	ug/kg C	U
Pesticide Organics/PCBs									
4,4'-DDD	3.900	ug/kg C	U	3.700	ug/kg C	U	4.000	ug/kg C	U
4,4'-DDE	3.900	ug/kg C	UJ	3.700	ug/kg C	UJ	4.000	ug/kg C	U
4,4'-DDT	3.900	ug/kg C	U	3.700	ug/kg C	U	4.000	ug/kg C	U
Aldrin	2.000	ug/kg C	U	1.900	ug/kg C	U	2.100	ug/kg C	U
Aroclor-1016	39.000	ug/kg C	UJ	37.000	ug/kg C	UJ	40.000	ug/kg C	UJ
Aroclor-1221	78.000	ug/kg C	UJ	76.000	ug/kg C	UJ	82.000	ug/kg C	UJ
Aroclor-1232	39.000	ug/kg C	UJ	37.000	ug/kg C	UJ	40.000	ug/kg C	UJ
Aroclor-1242	39.000	ug/kg C	UJ	37.000	ug/kg C	UJ	40.000	ug/kg C	UJ
Aroclor-1248	39.000	ug/kg C	UJ	37.000	ug/kg C	UJ	40.000	ug/kg C	UJ
Aroclor-1254	48.000	ug/kg C	J	37.000	ug/kg C	UJ	40.000	ug/kg C	UJ
Aroclor-1260	39.000	ug/kg C	UJ	37.000	ug/kg C	UJ	40.000	ug/kg C	UJ
Dieldrin	3.900	ug/kg C	U	3.700	ug/kg C	U	4.000	ug/kg C	U
Endosulfan II	3.900	ug/kg C	U	3.700	ug/kg C	U	4.000	ug/kg C	U
Endosulfan sulfate	3.900	ug/kg C	U	3.700	ug/kg C	U	4.000	ug/kg C	U
Endosulfan-I	2.000	ug/kg C	U	1.900	ug/kg C	U	2.100	ug/kg C	U
Endrin	3.900	ug/kg C	U	3.700	ug/kg C	U	4.000	ug/kg C	U
Endrin aldehyde	3.900	ug/kg C	U	3.700	ug/kg C	U	4.000	ug/kg C	U
Endrin ketone	3.900	ug/kg C	U	3.700	ug/kg C	U	4.000	ug/kg C	U
Heptachlor	2.000	ug/kg C	U	1.900	ug/kg C	U	2.100	ug/kg C	U
Heptachlor epoxide	2.000	ug/kg C	U	1.900	ug/kg C	U	2.100	ug/kg C	U
Methoxychlor	20.000	ug/kg C	U	19.000	ug/kg C	U	21.000	ug/kg C	U
Toxaphene	200.000	ug/kg C	UJ	190.000	ug/kg C	UJ	210.000	ug/kg C	UJ
alpha-BHC	2.000	ug/kg C	U	1.900	ug/kg C	U	2.100	ug/kg C	U
alpha-Chlordane	2.000	ug/kg C	U	1.900	ug/kg C	U	2.100	ug/kg C	U
beta-BHC	2.000	ug/kg C	U	1.900	ug/kg C	U	2.100	ug/kg C	U
delta-BHC	2.000	ug/kg C	UJ	1.900	ug/kg C	UJ	2.100	ug/kg C	U
gamma-BHC (Lindane)	2.000	ug/kg C	U	1.900	ug/kg C	U	2.100	ug/kg C	U
gamma-Chlordane	2.000	ug/kg C	U	1.900	ug/kg C	U	2.100	ug/kg C	U

000189

TABLE C-6A
(Continued)

PHASE II - CHEMICAL PARAMETERS

BORING NUMBER	1983				1983				1984			
SAMPLE NUMBER	111477				111480				111466			
	2.5-5				17.5-20				2.5-5			
SAMPLING DATE	05/03/93				05/05/93				05/01/93			
CHEMICAL PARAMETERS	RESULTS	UNITS	L	VQ	RESULTS	UNITS	L	VQ	RESULTS	UNITS	L	VQ
Inorganics												
Aluminum	13900.000	mg/kg	C	-	6060.000	mg/kg	D	-	9050.000	mg/kg	C	-
Antimony	0.620	mg/kg	C	R	0.220	mg/kg	D	UJ	0.530	mg/kg	C	UJ
Arsenic	5.400	mg/kg	C	J	9.000	mg/kg	D	-	5.100	mg/kg	C	J
Barium	90.800	mg/kg	C	-	82.700	mg/kg	D	J	64.900	mg/kg	C	J
Beryllium	1.800	mg/kg	C	-	0.380	mg/kg	D	-	1.300	mg/kg	C	-
Cadmium	1.100	mg/kg	C	-	0.730	mg/kg	D	-	1.500	mg/kg	C	-
Calcium	58900.000	mg/kg	C	-	110000.000	mg/kg	D	J	62400.000	mg/kg	C	J
Chromium	18.000	mg/kg	C	-	8.500	mg/kg	D	-	12.800	mg/kg	C	-
Cobalt	10.800	mg/kg	C	-	6.300	mg/kg	D	-	6.600	mg/kg	C	-
Copper	20.900	mg/kg	C	-	15.300	mg/kg	D	J	18.500	mg/kg	C	-
Cyanide	0.120	mg/kg	C	U	0.110	mg/kg	D	R	0.110	mg/kg	C	UJ
Iron	23800.000	mg/kg	C	-	14600.000	mg/kg	D	J	22300.000	mg/kg	C	J
Lead	13.100	mg/kg	C	J	7.300	mg/kg	D	J	9.800	mg/kg	C	J
Magnesium	15300.000	mg/kg	C	J	32600.000	mg/kg	D	J	17500.000	mg/kg	C	-
Manganese	569.000	mg/kg	C	-	489.000	mg/kg	D	J	352.000	mg/kg	C	J
Mercury	0.120	mg/kg	C	U	0.090	mg/kg	D	UJ	0.110	mg/kg	C	U
Molybdenum	1.700	mg/kg	C	-	2.800	mg/kg	D	U	1.700	mg/kg	C	U
Nickel	22.600	mg/kg	C	-	13.600	mg/kg	D	-	15.100	mg/kg	C	-
Potassium	1690.000	mg/kg	C	J	1420.000	mg/kg	D	J	1050.000	mg/kg	C	J
Selenium	0.240	mg/kg	C	UJ	0.220	mg/kg	D	UJ	0.230	mg/kg	C	UJ
Silicon	706.000	mg/kg	C	-	557.000	mg/kg	D	J	1690.000	mg/kg	C	J
Silver	0.480	mg/kg	C	U	0.440	mg/kg	D	U	0.460	mg/kg	C	U
Sodium	150.000	mg/kg	C	J	178.000	mg/kg	D	-	159.000	mg/kg	C	-
Thallium	0.290	mg/kg	C	-	0.220	mg/kg	D	U	0.230	mg/kg	C	U
Vanadium	31.100	mg/kg	C	J	16.100	mg/kg	D	J	22.900	mg/kg	C	J
Zinc	58.600	mg/kg	C	-	33.600	mg/kg	D	J	42.400	mg/kg	C	J
Volatile Organics												
1,1,1-Trichloroethane	12.000	ug/kg	C	U	11.000	ug/kg	D	U	11.000	ug/kg	C	U
1,1,2,2-Tetrachloroethane	12.000	ug/kg	C	U	11.000	ug/kg	D	U	11.000	ug/kg	C	U
1,1,2-Trichloroethane	12.000	ug/kg	C	U	11.000	ug/kg	D	U	11.000	ug/kg	C	U
1,1-Dichloroethane	12.000	ug/kg	C	U	11.000	ug/kg	D	U	11.000	ug/kg	C	U
1,1-Dichloroethene	12.000	ug/kg	C	U	11.000	ug/kg	D	U	11.000	ug/kg	C	U
1,2-Dichloroethane	12.000	ug/kg	C	U	11.000	ug/kg	D	U	11.000	ug/kg	C	U
1,2-Dichloroethene	12.000	ug/kg	C	U	11.000	ug/kg	D	U	11.000	ug/kg	C	U
1,2-Dichloropropane	12.000	ug/kg	C	U	11.000	ug/kg	D	U	11.000	ug/kg	C	U
2-Butanone	12.000	ug/kg	C	U	11.000	ug/kg	D	U	11.000	ug/kg	C	U
2-Hexanone	12.000	ug/kg	C	U	11.000	ug/kg	D	U	11.000	ug/kg	C	U
4-Methyl-2-pentanone	12.000	ug/kg	C	U	11.000	ug/kg	D	U	11.000	ug/kg	C	U
Acetone	12.000	ug/kg	C	U	11.000	ug/kg	D	UJ	11.000	ug/kg	C	U
Benzene	12.000	ug/kg	C	U	11.000	ug/kg	D	U	11.000	ug/kg	C	U

000190

6508

TABLE C-6A
(Continued)

PHASE II - CHEMICAL PARAMETERS

BORING NUMBER	1983				1983				1984			
SAMPLE NUMBER	111477				111480				111466			
	2.5-5				17.5-20				2.5-5			
SAMPLING DATE	05/03/93				05/05/93				05/01/93			
CHEMICAL PARAMETERS	RESULTS	UNITS	L	VQ	RESULTS	UNITS	L	VQ	RESULTS	UNITS	L	VQ
Volatile Organics												
Bromodichloromethane	12.000	ug/kg	C	U	11.000	ug/kg	D	U	11.000	ug/kg	C	U
Bromoform	12.000	ug/kg	C	U	11.000	ug/kg	D	U	11.000	ug/kg	C	U
Bromomethane	12.000	ug/kg	C	U	11.000	ug/kg	D	U	11.000	ug/kg	C	UJ
Carbon Tetrachloride	12.000	ug/kg	C	U	11.000	ug/kg	D	U	11.000	ug/kg	C	U
Carbon disulfide	12.000	ug/kg	C	U	2.000	ug/kg	D	J	11.000	ug/kg	C	U
Chlorobenzene	12.000	ug/kg	C	U	11.000	ug/kg	D	U	11.000	ug/kg	C	U
Chloroethane	12.000	ug/kg	C	UJ	11.000	ug/kg	D	U	11.000	ug/kg	C	UJ
Chloroform	12.000	ug/kg	C	U	11.000	ug/kg	D	U	11.000	ug/kg	C	U
Chloromethane	12.000	ug/kg	C	UJ	11.000	ug/kg	D	UJ	11.000	ug/kg	C	U
Dibromochloromethane	12.000	ug/kg	C	U	11.000	ug/kg	D	U	11.000	ug/kg	C	U
Ethylbenzene	12.000	ug/kg	C	U	11.000	ug/kg	D	U	11.000	ug/kg	C	U
Methylene chloride	12.000	ug/kg	C	U	15.000	ug/kg	D	U	11.000	ug/kg	C	U
Styrene	12.000	ug/kg	C	U	11.000	ug/kg	D	U	11.000	ug/kg	C	U
Tetrachloroethene	12.000	ug/kg	C	U	11.000	ug/kg	D	U	11.000	ug/kg	C	U
Toluene	2.000	ug/kg	C	J	11.000	ug/kg	D	U	2.000	ug/kg	C	J
Trichloroethene	12.000	ug/kg	C	U	11.000	ug/kg	D	U	11.000	ug/kg	C	U
Vinyl Acetate	NA				11.000	ug/kg	D	U	NA			
Vinyl chloride	12.000	ug/kg	C	UJ	11.000	ug/kg	D	U	11.000	ug/kg	C	U
Xylenes, Total	12.000	ug/kg	C	U	11.000	ug/kg	D	U	11.000	ug/kg	C	U
cis-1,3-Dichloropropene	12.000	ug/kg	C	U	11.000	ug/kg	D	U	11.000	ug/kg	C	U
trans-1,3-Dichloropropene	12.000	ug/kg	C	U	11.000	ug/kg	D	U	11.000	ug/kg	C	U
Semivolatile Organics												
1,2,4-Trichlorobenzene	390.000	ug/kg	C	U	360.000	ug/kg	D	U	360.000	ug/kg	C	UJ
1,2-Dichlorobenzene	390.000	ug/kg	C	U	360.000	ug/kg	D	U	360.000	ug/kg	C	U
1,3-Dichlorobenzene	390.000	ug/kg	C	U	360.000	ug/kg	D	U	360.000	ug/kg	C	U
1,4-Dichlorobenzene	390.000	ug/kg	C	U	360.000	ug/kg	D	U	360.000	ug/kg	C	U
2,4,5-Trichlorophenol	940.000	ug/kg	C	U	880.000	ug/kg	D	U	880.000	ug/kg	C	U
2,4,6-Trichlorophenol	390.000	ug/kg	C	U	360.000	ug/kg	D	U	360.000	ug/kg	C	U
2,4-Dichlorophenol	390.000	ug/kg	C	U	360.000	ug/kg	D	U	360.000	ug/kg	C	U
2,4-Dimethylphenol	390.000	ug/kg	C	U	360.000	ug/kg	D	U	360.000	ug/kg	C	U
2,4-Dinitrophenol	940.000	ug/kg	C	U	880.000	ug/kg	D	UJ	880.000	ug/kg	C	UJ
2,4-Dinitrotoluene	390.000	ug/kg	C	U	360.000	ug/kg	D	U	360.000	ug/kg	C	U
2,6-Dinitrotoluene	390.000	ug/kg	C	U	360.000	ug/kg	D	U	360.000	ug/kg	C	U
2-Chloronaphthalene	390.000	ug/kg	C	U	360.000	ug/kg	D	U	360.000	ug/kg	C	U
2-Chlorophenol	390.000	ug/kg	C	U	360.000	ug/kg	D	U	360.000	ug/kg	C	U
2-Methylnaphthalene	390.000	ug/kg	C	U	360.000	ug/kg	D	U	360.000	ug/kg	C	U
2-Methylphenol	390.000	ug/kg	C	U	360.000	ug/kg	D	U	360.000	ug/kg	C	UJ
2-Nitroaniline	940.000	ug/kg	C	U	880.000	ug/kg	D	U	880.000	ug/kg	C	U
2-Nitrophenol	390.000	ug/kg	C	U	360.000	ug/kg	D	U	360.000	ug/kg	C	U
3,3'-Dichlorobenzidine	390.000	ug/kg	C	U	360.000	ug/kg	D	UJ	360.000	ug/kg	C	U

000431

TABLE C-6A
(Continued)

PHASE II - CHEMICAL PARAMETERS

BORING NUMBER	1983				1983				1984			
SAMPLE NUMBER	111477				111480				111466			
	2.5-5				17.5-20				2.5-5			
SAMPLING DATE	05/03/93				05/05/93				05/01/93			
CHEMICAL PARAMETERS	RESULTS	UNITS	L	VQ	RESULTS	UNITS	L	VQ	RESULTS	UNITS	L	VQ
Semivolatile Organics												
3-Nitroaniline	940.000	ug/kg	C	U	880.000	ug/kg	D	UJ	880.000	ug/kg	C	UJ
4,6-Dinitro-2-methylphenol	940.000	ug/kg	C	U	880.000	ug/kg	D	U	880.000	ug/kg	C	U
4-Bromophenyl phenyl ether	390.000	ug/kg	C	U	360.000	ug/kg	D	U	360.000	ug/kg	C	U
4-Chloro-3-methylphenol	390.000	ug/kg	C	U	360.000	ug/kg	D	U	360.000	ug/kg	C	U
4-Chlorophenylphenyl ether	390.000	ug/kg	C	U	360.000	ug/kg	D	U	360.000	ug/kg	C	U
4-Methylphenol	390.000	ug/kg	C	U	360.000	ug/kg	D	U	360.000	ug/kg	C	UJ
4-Nitroaniline	940.000	ug/kg	C	U	880.000	ug/kg	D	UJ	880.000	ug/kg	C	R
4-Nitrophenol	940.000	ug/kg	C	U	880.000	ug/kg	D	U	880.000	ug/kg	C	U
Acenaphthene	390.000	ug/kg	C	U	360.000	ug/kg	D	U	360.000	ug/kg	C	U
Acenaphthylene	390.000	ug/kg	C	U	360.000	ug/kg	D	U	360.000	ug/kg	C	U
Anthracene	390.000	ug/kg	C	U	360.000	ug/kg	D	U	360.000	ug/kg	C	U
Benzo(a)anthracene	78.000	ug/kg	C	J	360.000	ug/kg	D	U	360.000	ug/kg	C	U
Benzo(a)pyrene	64.000	ug/kg	C	J	360.000	ug/kg	D	U	360.000	ug/kg	C	U
Benzo(b)fluoranthene	66.000	ug/kg	C	J	360.000	ug/kg	D	U	360.000	ug/kg	C	U
Benzo(g,h,i)perylene	390.000	ug/kg	C	U	360.000	ug/kg	D	U	360.000	ug/kg	C	U
Benzo(k)fluoranthene	97.000	ug/kg	C	J	360.000	ug/kg	D	U	360.000	ug/kg	C	UJ
Benzoic acid	1900.000	ug/kg	C	U	NA				1800.000	ug/kg	C	U
Benzyl alcohol	390.000	ug/kg	C	U	NA				360.000	ug/kg	C	U
Butyl benzyl phthalate	390.000	ug/kg	C	U	360.000	ug/kg	D	U	360.000	ug/kg	C	U
Carbazole	390.000	ug/kg	C	U	360.000	ug/kg	D	U	360.000	ug/kg	C	U
Chrysene	99.000	ug/kg	C	J	360.000	ug/kg	D	U	360.000	ug/kg	C	U
Di-n-butyl phthalate	390.000	ug/kg	C	U	360.000	ug/kg	D	U	360.000	ug/kg	C	U
Di-n-octyl phthalate	390.000	ug/kg	C	U	360.000	ug/kg	D	U	360.000	ug/kg	C	U
Dibenzo(a,h)anthracene	390.000	ug/kg	C	U	360.000	ug/kg	D	U	360.000	ug/kg	C	U
Dibenzofuran	390.000	ug/kg	C	U	360.000	ug/kg	D	U	360.000	ug/kg	C	U
Diethyl phthalate	390.000	ug/kg	C	U	360.000	ug/kg	D	U	360.000	ug/kg	C	UJ
Dimethyl phthalate	390.000	ug/kg	C	U	360.000	ug/kg	D	U	360.000	ug/kg	C	U
Fluoranthene	190.000	ug/kg	C	J	360.000	ug/kg	D	U	46.000	ug/kg	C	J
Fluorene	390.000	ug/kg	C	U	360.000	ug/kg	D	U	360.000	ug/kg	C	U
Hexachlorobenzene	390.000	ug/kg	C	U	360.000	ug/kg	D	U	360.000	ug/kg	C	U
Hexachlorobutadiene	390.000	ug/kg	C	U	360.000	ug/kg	D	U	360.000	ug/kg	C	R
Hexachlorocyclopentadiene	390.000	ug/kg	C	U	360.000	ug/kg	D	U	360.000	ug/kg	C	U
Hexachloroethane	390.000	ug/kg	C	U	360.000	ug/kg	D	U	360.000	ug/kg	C	U
Indeno(1,2,3-cd)pyrene	45.000	ug/kg	C	J	360.000	ug/kg	D	U	360.000	ug/kg	C	U
Isophorone	390.000	ug/kg	C	U	360.000	ug/kg	D	U	360.000	ug/kg	C	U
N-Nitroso-di-n-propylamine	390.000	ug/kg	C	U	360.000	ug/kg	D	U	360.000	ug/kg	C	U
N-Nitrosodiphenylamine	390.000	ug/kg	C	U	360.000	ug/kg	D	U	360.000	ug/kg	C	U
Naphthalene	390.000	ug/kg	C	U	360.000	ug/kg	D	U	360.000	ug/kg	C	U
Nitrobenzene	390.000	ug/kg	C	U	360.000	ug/kg	D	U	360.000	ug/kg	C	U
Pentachlorophenol	940.000	ug/kg	C	U	880.000	ug/kg	D	U	880.000	ug/kg	C	U
Phenanthrene	120.000	ug/kg	C	J	360.000	ug/kg	D	U	360.000	ug/kg	C	U
Phenol	390.000	ug/kg	C	U	360.000	ug/kg	D	U	360.000	ug/kg	C	U

000192

6508

TABLE C-6A
(Continued)

PHASE II - CHEMICAL PARAMETERS

BORING NUMBER	1983				1983				1984			
SAMPLE NUMBER	111477				111480				111466			
	2.5-5				17.5-20				2.5-5			
SAMPLING DATE	05/03/93				05/05/93				05/01/93			
CHEMICAL PARAMETERS	RESULTS	UNITS	L	VQ	RESULTS	UNITS	L	VQ	RESULTS	UNITS	L	VQ
Semivolatile Organics												
Pyrene	170.000	ug/kg	C	J	360.000	ug/kg	D	U	44.000	ug/kg	C	J
bis(2-Chloroethoxy)methane	390.000	ug/kg	C	U	360.000	ug/kg	D	U	360.000	ug/kg	C	U
bis(2-Chloroethyl)ether	390.000	ug/kg	C	U	360.000	ug/kg	D	U	360.000	ug/kg	C	U
bis(2-Chloroisopropyl) ether	390.000	ug/kg	C	U	360.000	ug/kg	D	U	360.000	ug/kg	C	UJ
bis(2-Ethylhexyl) phthalate	67.000	ug/kg	C	J	360.000	ug/kg	D	U	700.000	ug/kg	C	-
p-Chloroaniline	390.000	ug/kg	C	U	360.000	ug/kg	D	U	360.000	ug/kg	C	U
Pesticide Organics/PCBs												
4,4'-DDD	3.900	ug/kg	C	U	3.600	ug/kg	D	U	3.700	ug/kg	C	U
4,4'-DDE	3.900	ug/kg	C	U	3.600	ug/kg	D	UJ	3.700	ug/kg	C	U
4,4'-DDT	3.900	ug/kg	C	U	3.600	ug/kg	D	U	3.700	ug/kg	C	U
Aldrin	2.000	ug/kg	C	U	1.900	ug/kg	D	U	1.900	ug/kg	C	U
Aroclor-1016	39.000	ug/kg	C	UJ	36.000	ug/kg	D	UJ	37.000	ug/kg	C	U
Aroclor-1221	79.000	ug/kg	C	UJ	73.000	ug/kg	D	UJ	74.000	ug/kg	C	U
Aroclor-1232	39.000	ug/kg	C	UJ	36.000	ug/kg	D	UJ	37.000	ug/kg	C	U
Aroclor-1242	39.000	ug/kg	C	UJ	36.000	ug/kg	D	UJ	37.000	ug/kg	C	U
Aroclor-1248	39.000	ug/kg	C	UJ	36.000	ug/kg	D	UJ	37.000	ug/kg	C	U
Aroclor-1254	39.000	ug/kg	C	UJ	36.000	ug/kg	D	UJ	37.000	ug/kg	C	U
Aroclor-1260	39.000	ug/kg	C	UJ	36.000	ug/kg	D	UJ	37.000	ug/kg	C	U
Dieldrin	3.900	ug/kg	C	U	3.600	ug/kg	D	U	3.700	ug/kg	C	U
Endosulfan II	3.900	ug/kg	C	U	3.600	ug/kg	D	U	3.700	ug/kg	C	U
Endosulfan sulfate	3.900	ug/kg	C	U	3.600	ug/kg	D	U	3.700	ug/kg	C	U
Endosulfan-I	2.000	ug/kg	C	U	1.900	ug/kg	D	U	1.900	ug/kg	C	U
Endrin	3.900	ug/kg	C	U	3.600	ug/kg	D	U	3.700	ug/kg	C	U
Endrin aldehyde	3.900	ug/kg	C	U	3.600	ug/kg	D	U	3.700	ug/kg	C	U
Endrin ketone	3.900	ug/kg	C	U	3.600	ug/kg	D	U	3.700	ug/kg	C	U
Heptachlor	2.000	ug/kg	C	U	1.900	ug/kg	D	U	1.900	ug/kg	C	U
Heptachlor epoxide	2.000	ug/kg	C	U	1.900	ug/kg	D	U	1.900	ug/kg	C	U
Methoxychlor	20.000	ug/kg	C	U	19.000	ug/kg	D	U	19.000	ug/kg	C	UJ
Toxaphene	200.000	ug/kg	C	UJ	190.000	ug/kg	D	UJ	190.000	ug/kg	C	U
alpha-BHC	2.000	ug/kg	C	U	1.900	ug/kg	D	U	1.900	ug/kg	C	U
alpha-Chlordane	2.000	ug/kg	C	U	1.900	ug/kg	D	U	1.900	ug/kg	C	U
beta-BHC	2.000	ug/kg	C	U	1.900	ug/kg	D	U	1.900	ug/kg	C	U
delta-BHC	2.000	ug/kg	C	U	1.900	ug/kg	D	UJ	1.900	ug/kg	C	U
gamma-BHC (Lindane)	2.000	ug/kg	C	U	1.900	ug/kg	D	U	1.900	ug/kg	C	U
gamma-Chlordane	2.000	ug/kg	C	U	1.900	ug/kg	D	U	1.900	ug/kg	C	U

000433

TABLE C-6A
(Continued)

PHASE II - CHEMICAL PARAMETERS

BORING NUMBER	1984			1985			1985		
SAMPLE NUMBER	111468			111441			111448		
	12.5-15			2-4			15-17		
SAMPLING DATE	05/01/93			04/26/93			04/27/93		
CHEMICAL PARAMETERS	RESULTS	UNITS	L VQ	RESULTS	UNITS	L VQ	RESULTS	UNITS	L VQ
Inorganics									
Aluminum	16000.000	mg/kg	C -	5230.000	mg/kg	D -	7680.000	mg/kg	C -
Antimony	0.530	mg/kg	C UJ	0.930	mg/kg	D R	0.230	mg/kg	C R
Arsenic	8.400	mg/kg	C J	5.900	mg/kg	D J	4.400	mg/kg	C J
Barium	163.000	mg/kg	C J	53.600	mg/kg	D -	38.900	mg/kg	C -
Beryllium	1.400	mg/kg	C -	1.300	mg/kg	D -	1.300	mg/kg	C -
Cadmium	2.000	mg/kg	C -	0.770	mg/kg	D -	0.470	mg/kg	C U
Calcium	43300.000	mg/kg	C J	119000.000	mg/kg	D J	110000.000	mg/kg	C -
Chromium	22.500	mg/kg	C -	12.000	mg/kg	D -	11.300	mg/kg	C -
Cobalt	20.400	mg/kg	C -	4.600	mg/kg	D -	5.300	mg/kg	C -
Copper	26.900	mg/kg	C -	16.200	mg/kg	D -	19.100	mg/kg	C -
Cyanide	0.120	mg/kg	C UJ	0.110	mg/kg	D UJ	0.120	mg/kg	C U
Iron	32500.000	mg/kg	C J	13800.000	mg/kg	D -	14600.000	mg/kg	C -
Lead	11.500	mg/kg	C J	15.400	mg/kg	D J	8.800	mg/kg	C J
Magnesium	21200.000	mg/kg	C -	33800.000	mg/kg	D J	33600.000	mg/kg	C J
Manganese	1130.000	mg/kg	C J	461.000	mg/kg	D -	431.000	mg/kg	C -
Mercury	0.120	mg/kg	C U	0.110	mg/kg	D U	0.120	mg/kg	C U
Molybdenum	2.700	mg/kg	C U	1.600	mg/kg	D -	1.600	mg/kg	C -
Nickel	36.500	mg/kg	C -	10.100	mg/kg	D -	15.300	mg/kg	C -
Potassium	2330.000	mg/kg	C J	832.000	mg/kg	D J	1690.000	mg/kg	C J
Selenium	0.240	mg/kg	C UJ	0.220	mg/kg	D UJ	0.230	mg/kg	C UJ
Silicon	1410.000	mg/kg	C J	544.000	mg/kg	D -	519.000	mg/kg	C -
Silver	0.480	mg/kg	C U	0.430	mg/kg	D -	0.470	mg/kg	C U
Sodium	166.000	mg/kg	C -	192.000	mg/kg	D J	193.000	mg/kg	C J
Thallium	0.240	mg/kg	C U	0.220	mg/kg	D U	0.230	mg/kg	C U
Vanadium	33.600	mg/kg	C J	21.400	mg/kg	D J	19.800	mg/kg	C J
Zinc	73.000	mg/kg	C J	35.300	mg/kg	D -	38.500	mg/kg	C -
Volatile Organics									
1,1,1-Trichloroethane	12.000	ug/kg	C U	11.000	ug/kg	D U	12.000	ug/kg	C U
1,1,2,2-Tetrachloroethane	12.000	ug/kg	C U	11.000	ug/kg	D U	12.000	ug/kg	C U
1,1,2-Trichloroethane	12.000	ug/kg	C U	11.000	ug/kg	D U	12.000	ug/kg	C U
1,1-Dichloroethane	12.000	ug/kg	C U	11.000	ug/kg	D U	12.000	ug/kg	C U
1,1-Dichloroethene	12.000	ug/kg	C U	11.000	ug/kg	D U	12.000	ug/kg	C U
1,2-Dichloroethane	12.000	ug/kg	C U	11.000	ug/kg	D U	12.000	ug/kg	C U
1,2-Dichloroethene	12.000	ug/kg	C U	11.000	ug/kg	D U	12.000	ug/kg	C U
1,2-Dichloropropane	12.000	ug/kg	C U	11.000	ug/kg	D U	12.000	ug/kg	C U
2-Butanone	12.000	ug/kg	C U	11.000	ug/kg	D U	12.000	ug/kg	C U
2-Hexanone	12.000	ug/kg	C U	11.000	ug/kg	D U	12.000	ug/kg	C U
4-Methyl-2-pentanone	12.000	ug/kg	C U	11.000	ug/kg	D U	12.000	ug/kg	C U
Acetone	12.000	ug/kg	C U	11.000	ug/kg	D U	12.000	ug/kg	C U
Benzene	12.000	ug/kg	C U	11.000	ug/kg	D U	12.000	ug/kg	C U

TABLE C-6A
(Continued)

PHASE II - CHEMICAL PARAMETERS

BORING NUMBER	1984				1985				1985			
SAMPLE NUMBER	111468				111441				111448			
	12.5-15				2-4				15-17			
SAMPLING DATE	05/01/93				04/26/93				04/27/93			
CHEMICAL PARAMETERS	RESULTS	UNITS	L	VQ	RESULTS	UNITS	L	VQ	RESULTS	UNITS	L	VQ
Volatile Organics												
Bromodichloromethane	12.000	ug/kg	C	U	11.000	ug/kg	D	U	12.000	ug/kg	C	U
Bromoform	12.000	ug/kg	C	U	11.000	ug/kg	D	U	12.000	ug/kg	C	U
Bromomethane	12.000	ug/kg	C	UJ	11.000	ug/kg	D	U	12.000	ug/kg	C	U
Carbon Tetrachloride	12.000	ug/kg	C	U	11.000	ug/kg	D	U	12.000	ug/kg	C	U
Carbon disulfide	12.000	ug/kg	C	U	11.000	ug/kg	D	U	12.000	ug/kg	C	U
Chlorobenzene	12.000	ug/kg	C	U	11.000	ug/kg	D	U	12.000	ug/kg	C	U
Chloroethane	12.000	ug/kg	C	UJ	11.000	ug/kg	D	U	12.000	ug/kg	C	U
Chloroform	12.000	ug/kg	C	U	11.000	ug/kg	D	U	12.000	ug/kg	C	U
Chloromethane	12.000	ug/kg	C	U	11.000	ug/kg	D	U	12.000	ug/kg	C	U
Dibromochloromethane	12.000	ug/kg	C	U	11.000	ug/kg	D	U	12.000	ug/kg	C	U
Ethylbenzene	12.000	ug/kg	C	U	11.000	ug/kg	D	U	12.000	ug/kg	C	U
Methylene chloride	12.000	ug/kg	C	U	11.000	ug/kg	D	U	12.000	ug/kg	C	U
Styrene	12.000	ug/kg	C	U	11.000	ug/kg	D	U	12.000	ug/kg	C	U
Tetrachloroethene	12.000	ug/kg	C	U	11.000	ug/kg	D	U	12.000	ug/kg	C	U
Toluene	2.000	ug/kg	C	J	11.000	ug/kg	D	U	12.000	ug/kg	C	U
Trichloroethene	12.000	ug/kg	C	U	11.000	ug/kg	D	U	12.000	ug/kg	C	U
Vinyl Acetate	NA				11.000	ug/kg	D	U	12.000	ug/kg	C	U
Vinyl chloride	12.000	ug/kg	C	U	11.000	ug/kg	D	U	12.000	ug/kg	C	U
Xylenes, Total	12.000	ug/kg	C	U	11.000	ug/kg	D	U	12.000	ug/kg	C	U
cis-1,3-Dichloropropene	12.000	ug/kg	C	U	11.000	ug/kg	D	U	12.000	ug/kg	C	U
trans-1,3-Dichloropropene	12.000	ug/kg	C	U	11.000	ug/kg	D	UJ	12.000	ug/kg	C	UJ
Semivolatile Organics												
1,2,4-Trichlorobenzene	410.000	ug/kg	C	UJ	370.000	ug/kg	D	UJ	380.000	ug/kg	C	UJ
1,2-Dichlorobenzene	410.000	ug/kg	C	U	370.000	ug/kg	D	UJ	380.000	ug/kg	C	UJ
1,3-Dichlorobenzene	410.000	ug/kg	C	U	370.000	ug/kg	D	UJ	380.000	ug/kg	C	UJ
1,4-Dichlorobenzene	410.000	ug/kg	C	U	370.000	ug/kg	D	UJ	380.000	ug/kg	C	UJ
2,4,5-Trichlorophenol	1000.000	ug/kg	C	U	900.000	ug/kg	D	UJ	930.000	ug/kg	C	UJ
2,4,6-Trichlorophenol	410.000	ug/kg	C	U	370.000	ug/kg	D	UJ	380.000	ug/kg	C	UJ
2,4-Dichlorophenol	410.000	ug/kg	C	U	370.000	ug/kg	D	UJ	380.000	ug/kg	C	UJ
2,4-Dimethylphenol	410.000	ug/kg	C	U	370.000	ug/kg	D	UJ	380.000	ug/kg	C	UJ
2,4-Dinitrophenol	1000.000	ug/kg	C	UJ	900.000	ug/kg	D	UJ	930.000	ug/kg	C	UJ
2,4-Dinitrotoluene	410.000	ug/kg	C	U	370.000	ug/kg	D	UJ	380.000	ug/kg	C	UJ
2,6-Dinitrotoluene	410.000	ug/kg	C	U	370.000	ug/kg	D	UJ	380.000	ug/kg	C	UJ
2-Chloronaphthalene	410.000	ug/kg	C	U	370.000	ug/kg	D	UJ	380.000	ug/kg	C	UJ
2-Chlorophenol	410.000	ug/kg	C	U	370.000	ug/kg	D	UJ	380.000	ug/kg	C	UJ
2-Methylnaphthalene	410.000	ug/kg	C	U	370.000	ug/kg	D	UJ	380.000	ug/kg	C	UJ
2-Methylphenol	410.000	ug/kg	C	UJ	370.000	ug/kg	D	UJ	380.000	ug/kg	C	UJ
2-Nitroaniline	1000.000	ug/kg	C	U	900.000	ug/kg	D	UJ	930.000	ug/kg	C	UJ
2-Nitrophenol	410.000	ug/kg	C	U	370.000	ug/kg	D	UJ	380.000	ug/kg	C	UJ
3,3'-Dichlorobenzidine	410.000	ug/kg	C	U	370.000	ug/kg	D	UJ	380.000	ug/kg	C	UJ

000195

TABLE C-6A
(Continued)

PHASE II - CHEMICAL PARAMETERS

BORING NUMBER	1984				1985				1985			
SAMPLE NUMBER	111468				111441				111448			
	12.5-15				2-4				15-17			
SAMPLING DATE	05/01/93				04/26/93				04/27/93			
CHEMICAL PARAMETERS	RESULTS	UNITS	L	VQ	RESULTS	UNITS	L	VQ	RESULTS	UNITS	L	VQ
Semivolatile Organics												
3-Nitroaniline	1000.000	ug/kg	C	UJ	900.000	ug/kg	D	UJ	930.000	ug/kg	C	UJ
4,6-Dinitro-2-methylphenol	1000.000	ug/kg	C	U	900.000	ug/kg	D	UJ	930.000	ug/kg	C	UJ
4-Bromophenyl phenyl ether	410.000	ug/kg	C	U	370.000	ug/kg	D	UJ	380.000	ug/kg	C	UJ
4-Chloro-3-methylphenol	410.000	ug/kg	C	U	370.000	ug/kg	D	UJ	380.000	ug/kg	C	UJ
4-Chlorophenylphenyl ether	410.000	ug/kg	C	U	370.000	ug/kg	D	UJ	380.000	ug/kg	C	UJ
4-Methylphenol	410.000	ug/kg	C	UJ	370.000	ug/kg	D	UJ	380.000	ug/kg	C	UJ
4-Nitroaniline	1000.000	ug/kg	C	R	900.000	ug/kg	D	UJ	930.000	ug/kg	C	UJ
4-Nitrophenol	1000.000	ug/kg	C	U	900.000	ug/kg	D	UJ	930.000	ug/kg	C	UJ
Acenaphthene	410.000	ug/kg	C	U	93.000	ug/kg	D	J	380.000	ug/kg	C	UJ
Acenaphthylene	410.000	ug/kg	C	U	370.000	ug/kg	D	UJ	380.000	ug/kg	C	UJ
Anthracene	410.000	ug/kg	C	U	180.000	ug/kg	D	J	380.000	ug/kg	C	UJ
Benzo(a)anthracene	410.000	ug/kg	C	U	1100.000	ug/kg	D	J	380.000	ug/kg	C	UJ
Benzo(a)pyrene	410.000	ug/kg	C	U	790.000	ug/kg	D	J	380.000	ug/kg	C	UJ
Benzo(b)fluoranthene	410.000	ug/kg	C	U	1100.000	ug/kg	D	J	380.000	ug/kg	C	UJ
Benzo(g,h,i)perylene	410.000	ug/kg	C	U	420.000	ug/kg	D	J	380.000	ug/kg	C	UJ
Benzo(k)fluoranthene	410.000	ug/kg	C	UJ	700.000	ug/kg	D	J	380.000	ug/kg	C	UJ
Benzoic acid	2000.000	ug/kg	C	U	1800.000	ug/kg	D	UJ	1900.000	ug/kg	C	UJ
Benzyl alcohol	410.000	ug/kg	C	U	370.000	ug/kg	D	UJ	380.000	ug/kg	C	UJ
Butyl benzyl phthalate	410.000	ug/kg	C	U	370.000	ug/kg	D	UJ	380.000	ug/kg	C	UJ
Carbazole	410.000	ug/kg	C	U	67.000	ug/kg	D	J	380.000	ug/kg	C	UJ
Chrysene	410.000	ug/kg	C	U	940.000	ug/kg	D	J	380.000	ug/kg	C	UJ
Di-n-butyl phthalate	410.000	ug/kg	C	U	370.000	ug/kg	D	UJ	380.000	ug/kg	C	UJ
Di-n-octyl phthalate	410.000	ug/kg	C	U	370.000	ug/kg	D	UJ	380.000	ug/kg	C	UJ
Dibenzo(a,h)anthracene	410.000	ug/kg	C	U	250.000	ug/kg	D	J	380.000	ug/kg	C	UJ
Dibenzofuran	410.000	ug/kg	C	U	38.000	ug/kg	D	J	380.000	ug/kg	C	UJ
Diethyl phthalate	410.000	ug/kg	C	UJ	370.000	ug/kg	D	UJ	380.000	ug/kg	C	UJ
Dimethyl phthalate	410.000	ug/kg	C	U	370.000	ug/kg	D	UJ	380.000	ug/kg	C	UJ
Fluoranthene	410.000	ug/kg	C	U	1700.000	ug/kg	D	J	380.000	ug/kg	C	UJ
Fluorene	410.000	ug/kg	C	U	83.000	ug/kg	D	J	380.000	ug/kg	C	UJ
Hexachlorobenzene	410.000	ug/kg	C	U	370.000	ug/kg	D	UJ	380.000	ug/kg	C	UJ
Hexachlorobutadiene	410.000	ug/kg	C	R	370.000	ug/kg	D	UJ	380.000	ug/kg	C	UJ
Hexachlorocyclopentadiene	410.000	ug/kg	C	U	370.000	ug/kg	D	UJ	380.000	ug/kg	C	UJ
Hexachloroethane	410.000	ug/kg	C	U	370.000	ug/kg	D	UJ	380.000	ug/kg	C	UJ
Indeno(1,2,3-cd)pyrene	410.000	ug/kg	C	U	520.000	ug/kg	D	J	380.000	ug/kg	C	UJ
Isophorone	410.000	ug/kg	C	U	370.000	ug/kg	D	UJ	380.000	ug/kg	C	UJ
N-Nitroso-di-n-propylamine	410.000	ug/kg	C	U	370.000	ug/kg	D	UJ	380.000	ug/kg	C	UJ
N-Nitrosodiphenylamine	410.000	ug/kg	C	U	370.000	ug/kg	D	UJ	380.000	ug/kg	C	UJ
Naphthalene	410.000	ug/kg	C	U	370.000	ug/kg	D	UJ	380.000	ug/kg	C	UJ
Nitrobenzene	410.000	ug/kg	C	U	370.000	ug/kg	D	UJ	380.000	ug/kg	C	UJ
Pentachlorophenol	1000.000	ug/kg	C	U	900.000	ug/kg	D	UJ	930.000	ug/kg	C	UJ
Phenanthrene	410.000	ug/kg	C	U	970.000	ug/kg	D	J	380.000	ug/kg	C	UJ
Phenol	410.000	ug/kg	C	U	370.000	ug/kg	D	UJ	380.000	ug/kg	C	UJ

TABLE C-6A
(Continued)

PHASE II - CHEMICAL PARAMETERS

BORING NUMBER	1984			1985			1985		
SAMPLE NUMBER	111468			111441			111448		
	12.5-15			2-4			15-17		
SAMPLING DATE	05/01/93			04/26/93			04/27/93		
CHEMICAL PARAMETERS	RESULTS	UNITS L	VQ	RESULTS	UNITS L	VQ	RESULTS	UNITS L	VQ
Semivolatile Organics									
Pyrene	410.000	ug/kg C	U	1500.000	ug/kg D	J	380.000	ug/kg C	UJ
bis(2-Chloroethoxy)methane	410.000	ug/kg C	U	370.000	ug/kg D	UJ	380.000	ug/kg C	UJ
bis(2-Chloroethyl)ether	410.000	ug/kg C	U	370.000	ug/kg D	UJ	380.000	ug/kg C	UJ
bis(2-Chloroisopropyl) ether	410.000	ug/kg C	UJ	370.000	ug/kg D	UJ	380.000	ug/kg C	UJ
bis(2-Ethylhexyl) phthalate	1000.000	ug/kg C	-	2500.000	ug/kg D	J	1700.000	ug/kg C	J
p-Chloroaniline	410.000	ug/kg C	U	370.000	ug/kg D	UJ	380.000	ug/kg C	UJ
Pesticide Organics/PCBs									
4,4'-DDD	4.200	ug/kg C	U	5.000	ug/kg D	J	3.800	ug/kg C	U
4,4'-DDE	4.200	ug/kg C	U	3.700	ug/kg D	U	3.800	ug/kg C	U
4,4'-DDT	4.200	ug/kg C	U	3.700	ug/kg D	U	3.800	ug/kg C	U
Aldrin	2.100	ug/kg C	U	1.900	ug/kg D	U	2.000	ug/kg C	U
Aroclor-1016	42.000	ug/kg C	U	37.000	ug/kg D	U	38.000	ug/kg C	U
Aroclor-1221	85.000	ug/kg C	U	76.000	ug/kg D	U	77.000	ug/kg C	U
Aroclor-1232	42.000	ug/kg C	U	37.000	ug/kg D	U	38.000	ug/kg C	U
Aroclor-1242	42.000	ug/kg C	U	37.000	ug/kg D	U	38.000	ug/kg C	U
Aroclor-1248	42.000	ug/kg C	U	37.000	ug/kg D	U	38.000	ug/kg C	U
Aroclor-1254	42.000	ug/kg C	U	37.000	ug/kg D	U	38.000	ug/kg C	U
Aroclor-1260	42.000	ug/kg C	U	77.000	ug/kg D	J	38.000	ug/kg C	U
Dieldrin	4.200	ug/kg C	U	3.700	ug/kg D	U	3.800	ug/kg C	U
Endosulfan II	4.200	ug/kg C	U	3.700	ug/kg D	U	3.800	ug/kg C	U
Endosulfan sulfate	4.200	ug/kg C	U	6.200	ug/kg D	-	3.800	ug/kg C	U
Endosulfan-I	2.100	ug/kg C	U	1.900	ug/kg D	U	2.000	ug/kg C	U
Endrin	4.200	ug/kg C	U	3.700	ug/kg D	U	3.800	ug/kg C	U
Endrin aldehyde	4.200	ug/kg C	U	3.700	ug/kg D	U	3.800	ug/kg C	U
Endrin ketone	4.200	ug/kg C	U	3.700	ug/kg D	U	3.800	ug/kg C	U
Heptachlor	2.100	ug/kg C	U	1.900	ug/kg D	U	2.000	ug/kg C	U
Heptachlor epoxide	2.100	ug/kg C	U	1.900	ug/kg D	U	2.000	ug/kg C	U
Methoxychlor	21.000	ug/kg C	UJ	19.000	ug/kg D	U	20.000	ug/kg C	U
Toxaphene	210.000	ug/kg C	U	190.000	ug/kg D	U	200.000	ug/kg C	U
alpha-BHC	2.100	ug/kg C	U	1.900	ug/kg D	U	2.000	ug/kg C	U
alpha-Chlordane	2.100	ug/kg C	U	1.900	ug/kg D	U	2.000	ug/kg C	U
beta-BHC	2.100	ug/kg C	U	1.900	ug/kg D	U	2.000	ug/kg C	U
delta-BHC	2.100	ug/kg C	U	1.900	ug/kg D	U	2.000	ug/kg C	U
gamma-BHC (Lindane)	2.100	ug/kg C	U	1.900	ug/kg D	U	2.000	ug/kg C	U
gamma-Chlordane	2.100	ug/kg C	U	1.900	ug/kg D	U	2.000	ug/kg C	U

001437

TABLE C-6A
(Continued)

PHASE II - CHEMICAL PARAMETERS

BORING NUMBER	1986				1986				1987			
SAMPLE NUMBER	111452				111458				115357			
	2.5-5				12.5-15				5-7.5			
SAMPLING DATE	04/28/93				04/30/93				05/13/93			
CHEMICAL PARAMETERS	RESULTS	UNITS	L	VQ	RESULTS	UNITS	L	VQ	RESULTS	UNITS	L	VQ
Inorganics												
Aluminum	9490.000	mg/kg	C	-	9550.000	mg/kg	C	-	16300.000	mg/kg	C	-
Antimony	0.220	mg/kg	C	R	0.560	mg/kg	C	UJ	1.900	mg/kg	C	UJ
Arsenic	7.400	mg/kg	C	J	5.700	mg/kg	C	J	8.000	mg/kg	C	-
Barium	79.600	mg/kg	C	-	79.000	mg/kg	C	J	142.000	mg/kg	C	J
Beryllium	1.600	mg/kg	C	-	1.400	mg/kg	C	-	1.300	mg/kg	C	-
Cadmium	0.800	mg/kg	C	-	1.400	mg/kg	C	-	1.400	mg/kg	C	-
Calcium	112000.000	mg/kg	C	-	65100.000	mg/kg	C	J	37200.000	mg/kg	C	-
Chromium	18.000	mg/kg	C	-	14.700	mg/kg	C	-	20.200	mg/kg	C	-
Cobalt	8.000	mg/kg	C	-	6.000	mg/kg	C	-	11.900	mg/kg	C	-
Copper	17.500	mg/kg	C	-	19.400	mg/kg	C	-	21.600	mg/kg	C	-
Cyanide	0.110	mg/kg	C	U	0.120	mg/kg	C	UJ	0.120	mg/kg	C	R
Iron	16600.000	mg/kg	C	-	16600.000	mg/kg	C	J	26700.000	mg/kg	C	J
Lead	14.000	mg/kg	C	J	15.600	mg/kg	C	J	11.700	mg/kg	C	-
Magnesium	18500.000	mg/kg	C	J	25800.000	mg/kg	C	-	16800.000	mg/kg	C	-
Manganese	600.000	mg/kg	C	-	517.000	mg/kg	C	J	786.000	mg/kg	C	J
Mercury	0.110	mg/kg	C	U	0.110	mg/kg	C	U	0.120	mg/kg	C	U
Molybdenum	1.100	mg/kg	C	-	1.300	mg/kg	C	U	2.200	mg/kg	C	-
Nickel	15.600	mg/kg	C	-	18.200	mg/kg	C	-	24.300	mg/kg	C	-
Potassium	1220.000	mg/kg	C	J	1070.000	mg/kg	C	J	1890.000	mg/kg	C	J
Selenium	0.220	mg/kg	C	UJ	0.240	mg/kg	C	UJ	0.240	mg/kg	C	UJ
Silicon	930.000	mg/kg	C	-	853.000	mg/kg	C	J	1240.000	mg/kg	C	J
Silver	0.450	mg/kg	C	U	0.490	mg/kg	C	U	0.460	mg/kg	C	U
Sodium	216.000	mg/kg	C	J	178.000	mg/kg	C	-	163.000	mg/kg	C	J
Thallium	0.220	mg/kg	C	U	0.240	mg/kg	C	U	0.280	mg/kg	C	-
Vanadium	24.500	mg/kg	C	J	26.700	mg/kg	C	J	33.900	mg/kg	C	J
Zinc	46.400	mg/kg	C	-	48.700	mg/kg	C	J	84.700	mg/kg	C	J
Volatile Organics												
1,1,1-Trichloroethane	11.000	ug/kg	C	UJ	12.000	ug/kg	C	U	12.000	ug/kg	C	U
1,1,2,2-Tetrachloroethane	11.000	ug/kg	C	UJ	12.000	ug/kg	C	U	12.000	ug/kg	C	U
1,1,2-Trichloroethane	11.000	ug/kg	C	UJ	12.000	ug/kg	C	U	12.000	ug/kg	C	U
1,1-Dichloroethane	11.000	ug/kg	C	UJ	12.000	ug/kg	C	U	12.000	ug/kg	C	U
1,1-Dichloroethene	11.000	ug/kg	C	UJ	12.000	ug/kg	C	U	12.000	ug/kg	C	UJ
1,2-Dichloroethane	11.000	ug/kg	C	UJ	12.000	ug/kg	C	U	12.000	ug/kg	C	U
1,2-Dichloroethene	11.000	ug/kg	C	UJ	12.000	ug/kg	C	U	12.000	ug/kg	C	U
1,2-Dichloropropane	11.000	ug/kg	C	UJ	12.000	ug/kg	C	U	12.000	ug/kg	C	U
2-Butanone	11.000	ug/kg	C	UJ	12.000	ug/kg	C	U	12.000	ug/kg	C	R
2-Hexanone	11.000	ug/kg	C	UJ	12.000	ug/kg	C	U	12.000	ug/kg	C	UJ
4-Methyl-2-pentanone	11.000	ug/kg	C	UJ	12.000	ug/kg	C	U	12.000	ug/kg	C	UJ
Acetone	11.000	ug/kg	C	UJ	9.000	ug/kg	C	J	25.000	ug/kg	C	R
Benzene	11.000	ug/kg	C	UJ	12.000	ug/kg	C	U	12.000	ug/kg	C	U

TABLE C-6A
(Continued)

PHASE II - CHEMICAL PARAMETERS

BORING NUMBER	1986			1986			1987		
SAMPLE NUMBER	111452			111458			115357		
	2.5-5			12.5-15			5-7.5		
SAMPLING DATE	04/28/93			04/30/93			05/13/93		
CHEMICAL PARAMETERS	RESULTS	UNITS	L VQ	RESULTS	UNITS	L VQ	RESULTS	UNITS	L VQ
Volatile Organics									
Bromodichloromethane	11.000	ug/kg	C UJ	12.000	ug/kg	C U	12.000	ug/kg	C U
Bromoform	11.000	ug/kg	C UJ	12.000	ug/kg	C U	12.000	ug/kg	C U
Bromomethane	11.000	ug/kg	C UJ	12.000	ug/kg	C UJ	12.000	ug/kg	C U
Carbon Tetrachloride	11.000	ug/kg	C UJ	12.000	ug/kg	C U	12.000	ug/kg	C U
Carbon disulfide	11.000	ug/kg	C UJ	12.000	ug/kg	C U	12.000	ug/kg	C U
Chlorobenzene	11.000	ug/kg	C UJ	12.000	ug/kg	C U	12.000	ug/kg	C U
Chloroethane	11.000	ug/kg	C UJ	12.000	ug/kg	C UJ	12.000	ug/kg	C U
Chloroform	11.000	ug/kg	C UJ	12.000	ug/kg	C U	12.000	ug/kg	C U
Chloromethane	11.000	ug/kg	C UJ	12.000	ug/kg	C U	12.000	ug/kg	C UJ
Dibromochloromethane	11.000	ug/kg	C UJ	12.000	ug/kg	C U	12.000	ug/kg	C U
Ethylbenzene	11.000	ug/kg	C UJ	12.000	ug/kg	C U	12.000	ug/kg	C U
Methylene chloride	11.000	ug/kg	C UJ	12.000	ug/kg	C U	12.000	ug/kg	C UJ
Styrene	11.000	ug/kg	C UJ	12.000	ug/kg	C U	12.000	ug/kg	C U
Tetrachloroethene	11.000	ug/kg	C UJ	12.000	ug/kg	C U	12.000	ug/kg	C U
Toluene	1.000	ug/kg	C J	12.000	ug/kg	C U	12.000	ug/kg	C U
Trichloroethene	11.000	ug/kg	C UJ	12.000	ug/kg	C U	12.000	ug/kg	C U
Vinyl chloride	11.000	ug/kg	C UJ	12.000	ug/kg	C U	12.000	ug/kg	C U
Xylenes, Total	11.000	ug/kg	C UJ	12.000	ug/kg	C U	12.000	ug/kg	C U
cis-1,3-Dichloropropene	11.000	ug/kg	C UJ	12.000	ug/kg	C U	12.000	ug/kg	C U
trans-1,3-Dichloropropene	11.000	ug/kg	C UJ	12.000	ug/kg	C U	12.000	ug/kg	C U
Semivolatile Organics									
1,2,4-Trichlorobenzene	370.000	ug/kg	C UJ	410.000	ug/kg	C UJ	400.000	ug/kg	C U
1,2-Dichlorobenzene	370.000	ug/kg	C UJ	410.000	ug/kg	C U	400.000	ug/kg	C U
1,3-Dichlorobenzene	370.000	ug/kg	C UJ	410.000	ug/kg	C U	400.000	ug/kg	C U
1,4-Dichlorobenzene	370.000	ug/kg	C UJ	410.000	ug/kg	C U	400.000	ug/kg	C U
2,4,5-Trichlorophenol	890.000	ug/kg	C UJ	990.000	ug/kg	C U	970.000	ug/kg	C U
2,4,6-Trichlorophenol	370.000	ug/kg	C UJ	410.000	ug/kg	C U	400.000	ug/kg	C U
2,4-Dichlorophenol	370.000	ug/kg	C UJ	410.000	ug/kg	C U	400.000	ug/kg	C U
2,4-Dimethylphenol	370.000	ug/kg	C UJ	410.000	ug/kg	C U	400.000	ug/kg	C U
2,4-Dinitrophenol	890.000	ug/kg	C UJ	990.000	ug/kg	C UJ	470.000	ug/kg	C U
2,4-Dinitrotoluene	370.000	ug/kg	C UJ	410.000	ug/kg	C U	400.000	ug/kg	C U
2,6-Dinitrotoluene	370.000	ug/kg	C UJ	410.000	ug/kg	C U	400.000	ug/kg	C U
2-Chloronaphthalene	370.000	ug/kg	C UJ	410.000	ug/kg	C U	400.000	ug/kg	C U
2-Chlorophenol	370.000	ug/kg	C UJ	410.000	ug/kg	C U	400.000	ug/kg	C U
2-Methylnaphthalene	370.000	ug/kg	C UJ	410.000	ug/kg	C U	97.000	ug/kg	C J
2-Methylphenol	370.000	ug/kg	C UJ	410.000	ug/kg	C UJ	400.000	ug/kg	C U
2-Nitroaniline	890.000	ug/kg	C UJ	990.000	ug/kg	C U	970.000	ug/kg	C U
2-Nitrophenol	370.000	ug/kg	C UJ	410.000	ug/kg	C U	400.000	ug/kg	C U
3,3'-Dichlorobenzidine	370.000	ug/kg	C UJ	410.000	ug/kg	C U	400.000	ug/kg	C UJ
3-Nitroaniline	890.000	ug/kg	C UJ	990.000	ug/kg	C UJ	970.000	ug/kg	C U

000139

TABLE C-6A
(Continued)

PHASE II - CHEMICAL PARAMETERS

BORING NUMBER	1986				1986				1987			
SAMPLE NUMBER	111452				111458				115357			
	2.5-5				12.5-15				5-7.5			
SAMPLING DATE	04/28/93				04/30/93				05/13/93			
CHEMICAL PARAMETERS	RESULTS	UNITS	L	VQ	RESULTS	UNITS	L	VQ	RESULTS	UNITS	L	VQ
Semivolatile Organics												
4,6-Dinitro-2-methylphenol	890.000	ug/kg	C	UJ	990.000	ug/kg	C	U	970.000	ug/kg	C	U
4-Bromophenyl phenyl ether	370.000	ug/kg	C	UJ	410.000	ug/kg	C	U	400.000	ug/kg	C	U
4-Chloro-3-methylphenol	370.000	ug/kg	C	UJ	410.000	ug/kg	C	U	400.000	ug/kg	C	U
4-Chlorophenylphenyl ether	370.000	ug/kg	C	UJ	410.000	ug/kg	C	U	400.000	ug/kg	C	U
4-Methylphenol	370.000	ug/kg	C	UJ	410.000	ug/kg	C	UJ	400.000	ug/kg	C	U
4-Nitroaniline	890.000	ug/kg	C	UJ	990.000	ug/kg	C	R	970.000	ug/kg	C	U
4-Nitrophenol	890.000	ug/kg	C	UJ	990.000	ug/kg	C	U	970.000	ug/kg	C	U
Acenaphthene	83.000	ug/kg	C	J	410.000	ug/kg	C	U	250.000	ug/kg	C	U
Acenaphthylene	370.000	ug/kg	C	UJ	410.000	ug/kg	C	U	400.000	ug/kg	C	U
Anthracene	140.000	ug/kg	C	J	410.000	ug/kg	C	U	450.000	ug/kg	C	-
Benzo(a)anthracene	490.000	ug/kg	C	J	410.000	ug/kg	C	U	730.000	ug/kg	C	-
Benzo(a)pyrene	320.000	ug/kg	C	J	410.000	ug/kg	C	U	700.000	ug/kg	C	-
Benzo(b)fluoranthene	480.000	ug/kg	C	J	410.000	ug/kg	C	U	910.000	ug/kg	C	-
Benzo(g,h,i)perylene	90.000	ug/kg	C	J	410.000	ug/kg	C	U	170.000	ug/kg	C	J
Benzo(k)fluoranthene	370.000	ug/kg	C	J	410.000	ug/kg	C	UJ	320.000	ug/kg	C	J
Benzoic acid	1800.000	ug/kg	C	UJ	2000.000	ug/kg	C	U	1900.000	ug/kg	C	U
Benzyl alcohol	370.000	ug/kg	C	UJ	410.000	ug/kg	C	U	400.000	ug/kg	C	U
Butyl benzyl phthalate	370.000	ug/kg	C	UJ	410.000	ug/kg	C	U	400.000	ug/kg	C	U
Carbazole	68.000	ug/kg	C	J	410.000	ug/kg	C	U	240.000	ug/kg	C	J
Chrysene	550.000	ug/kg	C	J	410.000	ug/kg	C	U	740.000	ug/kg	C	-
Di-n-butyl phthalate	370.000	ug/kg	C	UJ	410.000	ug/kg	C	U	400.000	ug/kg	C	U
Di-n-octyl phthalate	370.000	ug/kg	C	UJ	410.000	ug/kg	C	U	400.000	ug/kg	C	U
Dibenzo(a,h)anthracene	120.000	ug/kg	C	J	410.000	ug/kg	C	U	110.000	ug/kg	C	J
Dibenzofuran	39.000	ug/kg	C	J	410.000	ug/kg	C	U	160.000	ug/kg	C	J
Diethyl phthalate	370.000	ug/kg	C	UJ	410.000	ug/kg	C	UJ	400.000	ug/kg	C	U
Dimethyl phthalate	370.000	ug/kg	C	UJ	410.000	ug/kg	C	U	400.000	ug/kg	C	U
Fluoranthene	1300.000	ug/kg	C	J	410.000	ug/kg	C	U	1900.000	ug/kg	C	-
Fluorene	80.000	ug/kg	C	J	410.000	ug/kg	C	U	280.000	ug/kg	C	J
Hexachlorobenzene	370.000	ug/kg	C	UJ	410.000	ug/kg	C	U	400.000	ug/kg	C	U
Hexachlorobutadiene	370.000	ug/kg	C	UJ	410.000	ug/kg	C	R	400.000	ug/kg	C	U
Hexachlorocyclopentadiene	370.000	ug/kg	C	UJ	410.000	ug/kg	C	U	400.000	ug/kg	C	U
Hexachloroethane	370.000	ug/kg	C	UJ	410.000	ug/kg	C	U	400.000	ug/kg	C	U
Indeno(1,2,3-cd)pyrene	230.000	ug/kg	C	J	410.000	ug/kg	C	U	440.000	ug/kg	C	-
Isophorone	370.000	ug/kg	C	UJ	410.000	ug/kg	C	U	400.000	ug/kg	C	U
N-Nitroso-di-n-propylamine	370.000	ug/kg	C	UJ	410.000	ug/kg	C	U	400.000	ug/kg	C	U
N-Nitrosodiphenylamine	370.000	ug/kg	C	UJ	410.000	ug/kg	C	U	400.000	ug/kg	C	U
Naphthalene	370.000	ug/kg	C	UJ	410.000	ug/kg	C	U	120.000	ug/kg	C	J
Nitrobenzene	370.000	ug/kg	C	UJ	410.000	ug/kg	C	U	400.000	ug/kg	C	U
Pentachlorophenol	890.000	ug/kg	C	UJ	990.000	ug/kg	C	U	970.000	ug/kg	C	U
Phenanthrene	1100.000	ug/kg	C	J	410.000	ug/kg	C	U	1700.000	ug/kg	C	-
Phenol	370.000	ug/kg	C	UJ	410.000	ug/kg	C	U	400.000	ug/kg	C	U
Pyrene	1100.000	ug/kg	C	J	410.000	ug/kg	C	U	1300.000	ug/kg	C	-

TABLE C-6A
(Continued)

PHASE II - CHEMICAL PARAMETERS

BORING NUMBER	1986				1986				1987			
SAMPLE NUMBER	111452				111458				115357			
	2.5-5				12.5-15				5-7.5			
SAMPLING DATE	04/28/93				04/30/93				05/13/93			
CHEMICAL PARAMETERS	RESULTS	UNITS	L	VQ	RESULTS	UNITS	L	VQ	RESULTS	UNITS	L	VQ
Semivolatile Organics												
bis(2-Chloroethoxy)methane	370.000	ug/kg	C	UJ	410.000	ug/kg	C	U	400.000	ug/kg	C	U
bis(2-Chloroethyl)ether	370.000	ug/kg	C	UJ	410.000	ug/kg	C	U	400.000	ug/kg	C	U
bis(2-Chloroisopropyl) ether	370.000	ug/kg	C	UJ	410.000	ug/kg	C	UJ	400.000	ug/kg	C	U
bis(2-Ethylhexyl) phthalate	370.000	ug/kg	C	UJ	950.000	ug/kg	C	-	710.000	ug/kg	C	-
p-Chloroaniline	370.000	ug/kg	C	UJ	410.000	ug/kg	C	U	400.000	ug/kg	C	U
Pesticide Organics/PCBs												
4,4'-DDD	3.700	ug/kg	C	U	4.100	ug/kg	C	U	4.000	ug/kg	C	U
4,4'-DDE	3.700	ug/kg	C	U	4.100	ug/kg	C	U	4.000	ug/kg	C	U
4,4'-DDT	3.700	ug/kg	C	U	4.100	ug/kg	C	U	4.000	ug/kg	C	U
Aldrin	1.900	ug/kg	C	U	2.100	ug/kg	C	U	2.100	ug/kg	C	U
Aroclor-1016	37.000	ug/kg	C	UJ	41.000	ug/kg	C	U	40.000	ug/kg	C	U
Aroclor-1221	75.000	ug/kg	C	UJ	83.000	ug/kg	C	U	81.000	ug/kg	C	U
Aroclor-1232	37.000	ug/kg	C	UJ	41.000	ug/kg	C	U	40.000	ug/kg	C	U
Aroclor-1242	37.000	ug/kg	C	UJ	41.000	ug/kg	C	U	40.000	ug/kg	C	U
Aroclor-1248	37.000	ug/kg	C	UJ	41.000	ug/kg	C	U	40.000	ug/kg	C	U
Aroclor-1254	37.000	ug/kg	C	UJ	41.000	ug/kg	C	U	40.000	ug/kg	C	U
Aroclor-1260	70.000	ug/kg	C	J	41.000	ug/kg	C	U	40.000	ug/kg	C	U
Dieldrin	3.700	ug/kg	C	U	4.100	ug/kg	C	U	4.000	ug/kg	C	U
Endosulfan II	3.700	ug/kg	C	U	4.100	ug/kg	C	U	4.000	ug/kg	C	U
Endosulfan sulfate	3.700	ug/kg	C	U	4.100	ug/kg	C	U	10.000	ug/kg	C	J
Endosulfan-I	1.900	ug/kg	C	U	2.100	ug/kg	C	U	2.100	ug/kg	C	U
Endrin	3.700	ug/kg	C	U	4.100	ug/kg	C	U	4.000	ug/kg	C	U
Endrin aldehyde	3.700	ug/kg	C	U	4.100	ug/kg	C	U	4.000	ug/kg	C	U
Endrin ketone	3.700	ug/kg	C	U	4.100	ug/kg	C	U	7.100	ug/kg	C	J
Heptachlor	1.900	ug/kg	C	U	2.100	ug/kg	C	U	2.100	ug/kg	C	U
Heptachlor epoxide	1.900	ug/kg	C	U	2.100	ug/kg	C	U	2.100	ug/kg	C	U
Methoxychlor	19.000	ug/kg	C	U	21.000	ug/kg	C	UJ	21.000	ug/kg	C	U
Toxaphene	190.000	ug/kg	C	UJ	210.000	ug/kg	C	U	210.000	ug/kg	C	U
alpha-BHC	1.900	ug/kg	C	U	2.100	ug/kg	C	U	2.100	ug/kg	C	U
alpha-Chlordane	1.900	ug/kg	C	U	2.100	ug/kg	C	U	2.100	ug/kg	C	U
beta-BHC	1.900	ug/kg	C	U	2.100	ug/kg	C	U	2.100	ug/kg	C	U
delta-BHC	1.900	ug/kg	C	U	2.100	ug/kg	C	U	2.100	ug/kg	C	U
gamma-BHC (Lindane)	1.900	ug/kg	C	U	2.100	ug/kg	C	U	2.100	ug/kg	C	U
gamma-Chlordane	1.900	ug/kg	C	U	2.100	ug/kg	C	U	2.100	ug/kg	C	U

000204

TABLE C-6A
(Continued)

PHASE II - CHEMICAL PARAMETERS

BORING NUMBER	1987				1988				1988			
SAMPLE NUMBER	115359				115350				115351			
	12.5-15				2.5-5				17.5-20			
SAMPLING DATE	05/13/93				05/12/93				05/12/93			
CHEMICAL PARAMETERS	RESULTS	UNITS	L	VQ	RESULTS	UNITS	L	VQ	RESULTS	UNITS	L	VQ
Inorganics												
Aluminum	6340.000	mg/kg	C	-	14500.000	mg/kg	D	-	7290.000	mg/kg	C	-
Antimony	0.860	mg/kg	C	UJ	1.400	mg/kg	D	UJ	0.790	mg/kg	C	UJ
Arsenic	4.900	mg/kg	C	-	6.100	mg/kg	D	-	8.400	mg/kg	C	-
Barium	47.500	mg/kg	C	J	122.000	mg/kg	D	J	124.000	mg/kg	C	J
Beryllium	0.860	mg/kg	C	-	1.500	mg/kg	D	-	1.400	mg/kg	C	-
Cadmium	0.710	mg/kg	C	-	1.100	mg/kg	D	-	1.100	mg/kg	C	-
Calcium	101000.000	mg/kg	C	-	41300.000	mg/kg	D	-	151000.000	mg/kg	C	-
Chromium	9.500	mg/kg	C	-	18.500	mg/kg	D	-	9.900	mg/kg	C	-
Cobalt	5.200	mg/kg	C	-	11.000	mg/kg	D	-	14.300	mg/kg	C	-
Copper	15.500	mg/kg	C	-	22.700	mg/kg	D	-	14.100	mg/kg	C	-
Cyanide	0.110	mg/kg	C	R	0.120	mg/kg	D	R	0.110	mg/kg	C	R
Iron	15300.000	mg/kg	C	J	22800.000	mg/kg	D	J	17800.000	mg/kg	C	J
Lead	6.300	mg/kg	C	-	14.700	mg/kg	D	-	13.600	mg/kg	C	-
Magnesium	33900.000	mg/kg	C	-	17600.000	mg/kg	D	-	28100.000	mg/kg	C	-
Manganese	296.000	mg/kg	C	J	513.000	mg/kg	D	J	926.000	mg/kg	C	J
Mercury	0.100	mg/kg	C	U	0.120	mg/kg	D	U	0.110	mg/kg	C	U
Molybdenum	2.900	mg/kg	C	-	1.300	mg/kg	D	-	2.500	mg/kg	C	-
Nickel	14.300	mg/kg	C	-	20.300	mg/kg	D	-	19.600	mg/kg	C	-
Potassium	1510.000	mg/kg	C	J	1420.000	mg/kg	D	J	1530.000	mg/kg	C	J
Selenium	0.300	mg/kg	C	UJ	0.250	mg/kg	D	UJ	0.500	mg/kg	C	UJ
Silicon	972.000	mg/kg	C	J	974.000	mg/kg	D	J	664.000	mg/kg	C	J
Silver	0.430	mg/kg	C	U	0.490	mg/kg	D	U	0.450	mg/kg	C	U
Sodium	173.000	mg/kg	C	J	206.000	mg/kg	D	J	181.000	mg/kg	C	J
Thallium	0.240	mg/kg	C	-	0.320	mg/kg	D	-	0.240	mg/kg	C	-
Vanadium	19.500	mg/kg	C	J	31.100	mg/kg	D	J	18.400	mg/kg	C	J
Zinc	41.700	mg/kg	C	J	62.500	mg/kg	D	J	38.000	mg/kg	C	J
Volatile Organics												
1,1,1-Trichloroethane	11.000	ug/kg	C	U	14.000	ug/kg	D	U	11.000	ug/kg	C	U
1,1,2,2-Tetrachloroethane	11.000	ug/kg	C	U	14.000	ug/kg	D	U	11.000	ug/kg	C	U
1,1,2-Trichloroethane	11.000	ug/kg	C	U	14.000	ug/kg	D	U	11.000	ug/kg	C	U
1,1-Dichloroethane	11.000	ug/kg	C	U	14.000	ug/kg	D	U	11.000	ug/kg	C	U
1,1-Dichloroethene	11.000	ug/kg	C	UJ	14.000	ug/kg	D	UJ	11.000	ug/kg	C	UJ
1,2-Dichloroethane	11.000	ug/kg	C	U	14.000	ug/kg	D	U	11.000	ug/kg	C	U
1,2-Dichloroethene	11.000	ug/kg	C	U	2.000	ug/kg	D	J	11.000	ug/kg	C	U
1,2-Dichloropropane	11.000	ug/kg	C	U	14.000	ug/kg	D	U	11.000	ug/kg	C	U
2-Butanone	11.000	ug/kg	C	R	14.000	ug/kg	D	R	11.000	ug/kg	C	R
2-Hexanone	11.000	ug/kg	C	UJ	14.000	ug/kg	D	UJ	11.000	ug/kg	C	UJ
4-Methyl-2-pentanone	11.000	ug/kg	C	UJ	3.000	ug/kg	D	J	11.000	ug/kg	C	UJ
Acetone	30.000	ug/kg	C	R	78.000	ug/kg	D	R	31.000	ug/kg	C	R
Benzene	11.000	ug/kg	C	U	3.000	ug/kg	D	J	11.000	ug/kg	C	U

TABLE C-6A
(Continued)

PHASE II - CHEMICAL PARAMETERS

BORING NUMBER	1987				1988				1988			
SAMPLE NUMBER	115359				115350				115351			
	12.5-15				2.5-5				17.5-20			
SAMPLING DATE	05/13/93				05/12/93				05/12/93			
CHEMICAL PARAMETERS	RESULTS	UNITS	L	VQ	RESULTS	UNITS	L	VQ	RESULTS	UNITS	L	VQ
Volatile Organics												
Bromodichloromethane	11.000	ug/kg	C	U	14.000	ug/kg	D	U	11.000	ug/kg	C	U
Bromoform	11.000	ug/kg	C	U	14.000	ug/kg	D	U	11.000	ug/kg	C	U
Bromomethane	11.000	ug/kg	C	U	14.000	ug/kg	D	U	11.000	ug/kg	C	U
Carbon Tetrachloride	11.000	ug/kg	C	U	14.000	ug/kg	D	U	11.000	ug/kg	C	U
Carbon disulfide	11.000	ug/kg	C	U	14.000	ug/kg	D	U	11.000	ug/kg	C	U
Chlorobenzene	11.000	ug/kg	C	U	14.000	ug/kg	D	U	11.000	ug/kg	C	U
Chloroethane	11.000	ug/kg	C	U	14.000	ug/kg	D	U	11.000	ug/kg	C	U
Chloroform	11.000	ug/kg	C	U	14.000	ug/kg	D	U	11.000	ug/kg	C	U
Chloromethane	11.000	ug/kg	C	UJ	14.000	ug/kg	D	UJ	11.000	ug/kg	C	UJ
Dibromochloromethane	11.000	ug/kg	C	U	14.000	ug/kg	D	U	11.000	ug/kg	C	U
Ethylbenzene	11.000	ug/kg	C	U	76.000	ug/kg	D	-	11.000	ug/kg	C	U
Methylene chloride	11.000	ug/kg	C	UJ	14.000	ug/kg	D	UJ	11.000	ug/kg	C	UJ
Styrene	11.000	ug/kg	C	U	14.000	ug/kg	D	U	11.000	ug/kg	C	U
Tetrachloroethene	11.000	ug/kg	C	U	14.000	ug/kg	D	UJ	11.000	ug/kg	C	U
Toluene	10.000	ug/kg	C	U	10.000	ug/kg	D	U	11.000	ug/kg	C	U
Trichloroethene	11.000	ug/kg	C	U	14.000	ug/kg	D	U	11.000	ug/kg	C	U
Vinyl chloride	11.000	ug/kg	C	U	14.000	ug/kg	D	U	11.000	ug/kg	C	U
Xylenes, Total	11.000	ug/kg	C	U	260.000	ug/kg	D	-	1.000	ug/kg	C	J
cis-1,3-Dichloropropene	11.000	ug/kg	C	U	14.000	ug/kg	D	U	11.000	ug/kg	C	U
trans-1,3-Dichloropropene	11.000	ug/kg	C	U	14.000	ug/kg	D	U	11.000	ug/kg	C	U
Semivolatile Organics												
1,2,4-Trichlorobenzene	370.000	ug/kg	C	U	440.000	ug/kg	D	U	370.000	ug/kg	C	U
1,2-Dichlorobenzene	370.000	ug/kg	C	U	440.000	ug/kg	D	U	370.000	ug/kg	C	U
1,3-Dichlorobenzene	370.000	ug/kg	C	U	440.000	ug/kg	D	U	370.000	ug/kg	C	U
1,4-Dichlorobenzene	370.000	ug/kg	C	U	440.000	ug/kg	D	U	370.000	ug/kg	C	U
2,4,5-Trichlorophenol	910.000	ug/kg	C	U	1100.000	ug/kg	D	U	890.000	ug/kg	C	U
2,4,6-Trichlorophenol	370.000	ug/kg	C	U	440.000	ug/kg	D	U	370.000	ug/kg	C	U
2,4-Dichlorophenol	370.000	ug/kg	C	U	440.000	ug/kg	D	U	370.000	ug/kg	C	U
2,4-Dimethylphenol	370.000	ug/kg	C	U	440.000	ug/kg	D	U	370.000	ug/kg	C	U
2,4-Dinitrophenol	910.000	ug/kg	C	U	1100.000	ug/kg	D	U	890.000	ug/kg	C	U
2,4-Dinitrotoluene	370.000	ug/kg	C	U	440.000	ug/kg	D	U	370.000	ug/kg	C	U
2,6-Dinitrotoluene	370.000	ug/kg	C	U	440.000	ug/kg	D	U	370.000	ug/kg	C	U
2-Chloronaphthalene	370.000	ug/kg	C	U	440.000	ug/kg	D	U	370.000	ug/kg	C	U
2-Chlorophenol	370.000	ug/kg	C	U	440.000	ug/kg	D	U	370.000	ug/kg	C	U
2-Methylnaphthalene	370.000	ug/kg	C	U	440.000	ug/kg	D	U	370.000	ug/kg	C	U
2-Methylphenol	370.000	ug/kg	C	U	440.000	ug/kg	D	U	370.000	ug/kg	C	U
2-Nitroaniline	910.000	ug/kg	C	U	1100.000	ug/kg	D	U	890.000	ug/kg	C	U
2-Nitrophenol	370.000	ug/kg	C	U	440.000	ug/kg	D	U	370.000	ug/kg	C	U
3,3'-Dichlorobenzidine	370.000	ug/kg	C	UJ	440.000	ug/kg	D	UJ	370.000	ug/kg	C	UJ
3-Nitroaniline	910.000	ug/kg	C	U	1100.000	ug/kg	D	U	890.000	ug/kg	C	U

002203

TABLE C-6A
(Continued)

PHASE II - CHEMICAL PARAMETERS

BORING NUMBER	1987			1988			1988		
SAMPLE NUMBER	115359			115350			115351		
	12.5-15			2.5-5			17.5-20		
SAMPLING DATE	05/13/93			05/12/93			05/12/93		
CHEMICAL PARAMETERS	RESULTS	UNITS	L VQ	RESULTS	UNITS	L VQ	RESULTS	UNITS	L VQ
Semivolatile Organics									
4,6-Dinitro-2-methylphenol	910.000	ug/kg	C U	1100.000	ug/kg	D U	890.000	ug/kg	C U
4-Bromophenyl phenyl ether	370.000	ug/kg	C U	440.000	ug/kg	D U	370.000	ug/kg	C U
4-Chloro-3-methylphenol	370.000	ug/kg	C U	440.000	ug/kg	D U	370.000	ug/kg	C U
4-Chlorophenylphenyl ether	370.000	ug/kg	C U	440.000	ug/kg	D U	370.000	ug/kg	C U
4-Methylphenol	370.000	ug/kg	C U	440.000	ug/kg	D U	370.000	ug/kg	C U
4-Nitroaniline	910.000	ug/kg	C U	1100.000	ug/kg	D U	890.000	ug/kg	C U
4-Nitrophenol	910.000	ug/kg	C U	1100.000	ug/kg	D U	890.000	ug/kg	C U
Acenaphthene	370.000	ug/kg	C U	440.000	ug/kg	D U	370.000	ug/kg	C U
Acenaphthylene	370.000	ug/kg	C U	440.000	ug/kg	D U	370.000	ug/kg	C U
Anthracene	370.000	ug/kg	C U	440.000	ug/kg	D U	370.000	ug/kg	C U
Benzo(a)anthracene	370.000	ug/kg	C U	440.000	ug/kg	D U	370.000	ug/kg	C U
Benzo(a)pyrene	370.000	ug/kg	C U	440.000	ug/kg	D U	370.000	ug/kg	C U
Benzo(b)fluoranthene	370.000	ug/kg	C U	440.000	ug/kg	D U	370.000	ug/kg	C U
Benzo(g,h,i)perylene	370.000	ug/kg	C U	440.000	ug/kg	D U	370.000	ug/kg	C U
Benzo(k)fluoranthene	370.000	ug/kg	C U	440.000	ug/kg	D U	370.000	ug/kg	C U
Benzoic acid	1800.000	ug/kg	C U	2100.000	ug/kg	D U	1800.000	ug/kg	C U
Benzyl alcohol	370.000	ug/kg	C U	440.000	ug/kg	D U	370.000	ug/kg	C U
Butyl benzyl phthalate	370.000	ug/kg	C U	440.000	ug/kg	D U	370.000	ug/kg	C U
Carbazole	370.000	ug/kg	C U	440.000	ug/kg	D U	370.000	ug/kg	C U
Chrysene	370.000	ug/kg	C U	440.000	ug/kg	D U	370.000	ug/kg	C U
Di-n-butyl phthalate	370.000	ug/kg	C U	440.000	ug/kg	D U	370.000	ug/kg	C U
Di-n-octyl phthalate	370.000	ug/kg	C U	440.000	ug/kg	D U	370.000	ug/kg	C U
Dibenzo(a,h)anthracene	370.000	ug/kg	C U	440.000	ug/kg	D U	370.000	ug/kg	C U
Dibenzofuran	370.000	ug/kg	C U	440.000	ug/kg	D U	370.000	ug/kg	C U
Diethyl phthalate	370.000	ug/kg	C U	440.000	ug/kg	D U	370.000	ug/kg	C U
Dimethyl phthalate	370.000	ug/kg	C U	440.000	ug/kg	D U	370.000	ug/kg	C U
Fluoranthene	370.000	ug/kg	C U	160.000	ug/kg	D J	370.000	ug/kg	C U
Fluorene	370.000	ug/kg	C U	440.000	ug/kg	D U	370.000	ug/kg	C U
Hexachlorobenzene	370.000	ug/kg	C U	440.000	ug/kg	D U	370.000	ug/kg	C U
Hexachlorobutadiene	370.000	ug/kg	C U	440.000	ug/kg	D U	370.000	ug/kg	C U
Hexachlorocyclopentadiene	370.000	ug/kg	C U	440.000	ug/kg	D U	370.000	ug/kg	C U
Hexachloroethane	370.000	ug/kg	C U	440.000	ug/kg	D U	370.000	ug/kg	C U
Indeno(1,2,3-cd)pyrene	370.000	ug/kg	C U	440.000	ug/kg	D U	370.000	ug/kg	C U
Isophorone	370.000	ug/kg	C U	440.000	ug/kg	D U	370.000	ug/kg	C U
N-Nitroso-di-n-propylamine	370.000	ug/kg	C U	440.000	ug/kg	D U	370.000	ug/kg	C U
N-Nitrosodiphenylamine	370.000	ug/kg	C U	440.000	ug/kg	D U	370.000	ug/kg	C U
Naphthalene	370.000	ug/kg	C U	440.000	ug/kg	D U	370.000	ug/kg	C U
Nitrobenzene	370.000	ug/kg	C U	440.000	ug/kg	D U	370.000	ug/kg	C U
Pentachlorophenol	910.000	ug/kg	C U	1100.000	ug/kg	D U	890.000	ug/kg	C U
Phenanthrene	370.000	ug/kg	C U	82.000	ug/kg	D J	370.000	ug/kg	C U
Phenol	370.000	ug/kg	C U	440.000	ug/kg	D U	370.000	ug/kg	C U
Pyrene	370.000	ug/kg	C U	100.000	ug/kg	D J	370.000	ug/kg	C U

TABLE C-6A
(Continued)

PHASE II - CHEMICAL PARAMETERS

BORING NUMBER	1987			1988			1988		
SAMPLE NUMBER	115359			115350			115351		
	12.5-15			2.5-5			17.5-20		
SAMPLING DATE	05/13/93			05/12/93			05/12/93		
CHEMICAL PARAMETERS	RESULTS	UNITS L	VQ	RESULTS	UNITS L	VQ	RESULTS	UNITS L	VQ
Semivolatile Organics									
bis(2-Chloroethoxy)methane	370.000	ug/kg C	U	440.000	ug/kg D	U	370.000	ug/kg C	U
bis(2-Chloroethyl)ether	370.000	ug/kg C	U	440.000	ug/kg D	U	370.000	ug/kg C	U
bis(2-Chloroisopropyl) ether	370.000	ug/kg C	U	440.000	ug/kg D	U	370.000	ug/kg C	U
bis(2-Ethylhexyl) phthalate	460.000	ug/kg C	-	440.000	ug/kg D	U	410.000	ug/kg C	-
p-Chloroaniline	370.000	ug/kg C	U	440.000	ug/kg D	U	370.000	ug/kg C	U
Pesticide Organics/PCBs									
4,4'-DDD	3.700	ug/kg C	U	4.400	ug/kg D	U	3.700	ug/kg C	U
4,4'-DDE	3.700	ug/kg C	U	4.400	ug/kg D	U	3.700	ug/kg C	U
4,4'-DDT	3.700	ug/kg C	U	4.400	ug/kg D	U	3.700	ug/kg C	U
Aldrin	1.900	ug/kg C	U	2.300	ug/kg D	U	1.900	ug/kg C	U
Aroclor-1016	37.000	ug/kg C	U	44.000	ug/kg D	U	37.000	ug/kg C	U
Aroclor-1221	76.000	ug/kg C	U	90.000	ug/kg D	U	75.000	ug/kg C	U
Aroclor-1232	37.000	ug/kg C	U	44.000	ug/kg D	U	37.000	ug/kg C	U
Aroclor-1242	37.000	ug/kg C	U	44.000	ug/kg D	U	37.000	ug/kg C	U
Aroclor-1248	37.000	ug/kg C	U	44.000	ug/kg D	U	37.000	ug/kg C	U
Aroclor-1254	37.000	ug/kg C	U	44.000	ug/kg D	U	37.000	ug/kg C	U
Aroclor-1260	37.000	ug/kg C	U	44.000	ug/kg D	U	37.000	ug/kg C	U
Dieldrin	3.700	ug/kg C	U	4.400	ug/kg D	U	3.700	ug/kg C	U
Endosulfan II	3.700	ug/kg C	U	4.400	ug/kg D	U	3.700	ug/kg C	U
Endosulfan sulfate	3.700	ug/kg C	U	4.400	ug/kg D	U	3.700	ug/kg C	U
Endosulfan-I	1.900	ug/kg C	U	2.300	ug/kg D	U	1.900	ug/kg C	U
Endrin	3.700	ug/kg C	U	4.400	ug/kg D	U	3.700	ug/kg C	U
Endrin aldehyde	3.700	ug/kg C	U	4.400	ug/kg D	U	3.700	ug/kg C	U
Endrin ketone	3.700	ug/kg C	U	4.400	ug/kg D	U	3.700	ug/kg C	U
Heptachlor	1.900	ug/kg C	U	2.300	ug/kg D	U	1.900	ug/kg C	U
Heptachlor epoxide	1.900	ug/kg C	U	2.300	ug/kg D	U	1.900	ug/kg C	U
Methoxychlor	19.000	ug/kg C	U	23.000	ug/kg D	U	19.000	ug/kg C	U
Toxaphene	190.000	ug/kg C	U	230.000	ug/kg D	U	190.000	ug/kg C	U
alpha-BHC	1.900	ug/kg C	U	2.300	ug/kg D	U	1.900	ug/kg C	U
alpha-Chlordane	1.900	ug/kg C	U	2.300	ug/kg D	U	1.900	ug/kg C	U
beta-BHC	1.900	ug/kg C	U	2.300	ug/kg D	U	1.900	ug/kg C	U
delta-BHC	1.900	ug/kg C	U	2.300	ug/kg D	U	1.900	ug/kg C	U
gamma-BHC (Lindane)	1.900	ug/kg C	U	2.300	ug/kg D	U	1.900	ug/kg C	U
gamma-Chlordane	1.900	ug/kg C	U	2.300	ug/kg D	U	1.900	ug/kg C	U

000205

TABLE C-6A
(Continued)

PHASE II - CHEMICAL PARAMETERS

BORING NUMBER	1989				1989				1990			
SAMPLE NUMBER	115362				115363				115329			
	2.5-5				12.5-15				6-9			
SAMPLING DATE	05/14/93				05/14/93				05/10/93			
CHEMICAL PARAMETERS	RESULTS	UNITS	L	VQ	RESULTS	UNITS	L	VQ	RESULTS	UNITS	L	VQ
Inorganics												
Aluminum	11400.000	mg/kg	C	J	11100.000	mg/kg	C	J	8900.000	mg/kg	C	-
Antimony	0.850	mg/kg	C	UJ	1.100	mg/kg	C	UJ	0.960	mg/kg	C	UJ
Arsenic	5.400	mg/kg	C	-	3.900	mg/kg	C	-	6.700	mg/kg	C	-
Barium	75.800	mg/kg	C	-	108.000	mg/kg	C	-	86.400	mg/kg	C	J
Beryllium	0.400	mg/kg	C	-	0.500	mg/kg	C	-	1.400	mg/kg	C	-
Cadmium	0.850	mg/kg	C	U	1.100	mg/kg	C	U	0.470	mg/kg	C	U
Calcium	55000.000	mg/kg	C	J	104000.000	mg/kg	C	J	58400.000	mg/kg	C	-
Chromium	12.000	mg/kg	C	J	12.000	mg/kg	C	J	10.100	mg/kg	C	-
Cobalt	6.400	mg/kg	C	-	6.700	mg/kg	C	-	10.300	mg/kg	C	-
Copper	21.900	mg/kg	C	J	19.700	mg/kg	C	J	17.700	mg/kg	C	-
Cyanide	0.120	mg/kg	C	U	0.120	mg/kg	C	U	0.120	mg/kg	C	R
Iron	17900.000	mg/kg	C	J	21800.000	mg/kg	C	J	18100.000	mg/kg	C	J
Lead	16.900	mg/kg	C	J	7.500	mg/kg	C	J	13.400	mg/kg	C	-
Magnesium	15600.000	mg/kg	C	J	24600.000	mg/kg	C	J	18400.000	mg/kg	C	-
Manganese	336.000	mg/kg	C	-	457.000	mg/kg	C	-	618.000	mg/kg	C	J
Mercury	0.110	mg/kg	C	U	0.100	mg/kg	C	U	0.120	mg/kg	C	U
Molybdenum	5.000	mg/kg	C	-	8.200	mg/kg	C	-	1.200	mg/kg	C	-
Nickel	16.700	mg/kg	C	J	20.900	mg/kg	C	J	19.400	mg/kg	C	-
Potassium	1190.000	mg/kg	C	-	2470.000	mg/kg	C	-	949.000	mg/kg	C	J
Selenium	0.450	mg/kg	C	U	0.460	mg/kg	C	U	0.290	mg/kg	C	UJ
Silicon	392.000	mg/kg	C	J	1010.000	mg/kg	C	J	816.000	mg/kg	C	J
Silver	5.000	mg/kg	C	-	5.900	mg/kg	C	-	0.470	mg/kg	C	U
Sodium	142.000	mg/kg	C	-	197.000	mg/kg	C	-	207.000	mg/kg	C	J
Thallium	0.450	mg/kg	C	U	0.460	mg/kg	C	U	0.250	mg/kg	C	-
Vanadium	26.000	mg/kg	C	-	24.700	mg/kg	C	-	23.700	mg/kg	C	J
Zinc	50.800	mg/kg	C	J	56.800	mg/kg	C	J	49.800	mg/kg	C	J
Volatile Organics												
1,1,1-Trichloroethane	12.000	ug/kg	C	U	12.000	ug/kg	C	U	12.000	ug/kg	C	U
1,1,2,2-Tetrachloroethane	12.000	ug/kg	C	U	12.000	ug/kg	C	U	12.000	ug/kg	C	R
1,1,2-Trichloroethane	12.000	ug/kg	C	U	12.000	ug/kg	C	U	12.000	ug/kg	C	U
1,1-Dichloroethane	12.000	ug/kg	C	U	12.000	ug/kg	C	U	12.000	ug/kg	C	UJ
1,1-Dichloroethene	12.000	ug/kg	C	U	12.000	ug/kg	C	U	12.000	ug/kg	C	U
1,2-Dichloroethane	12.000	ug/kg	C	U	12.000	ug/kg	C	U	12.000	ug/kg	C	U
1,2-Dichloroethene	12.000	ug/kg	C	U	12.000	ug/kg	C	U	12.000	ug/kg	C	U
1,2-Dichloropropane	12.000	ug/kg	C	UJ	12.000	ug/kg	C	UJ	12.000	ug/kg	C	U
2-Butanone	12.000	ug/kg	C	U	12.000	ug/kg	C	U	12.000	ug/kg	C	UJ
2-Hexanone	12.000	ug/kg	C	U	12.000	ug/kg	C	U	12.000	ug/kg	C	U
4-Methyl-2-pentanone	12.000	ug/kg	C	U	12.000	ug/kg	C	U	12.000	ug/kg	C	U
Acetone	12.000	ug/kg	C	U	12.000	ug/kg	C	U	12.000	ug/kg	C	R
Benzene	12.000	ug/kg	C	U	12.000	ug/kg	C	U	12.000	ug/kg	C	U

TABLE C-6A
(Continued)

PHASE II - CHEMICAL PARAMETERS

BORING NUMBER	1989				1989				1990			
SAMPLE NUMBER	115362				115363				115329			
	2.5-5				12.5-15				6-9			
SAMPLING DATE	05/14/93				05/14/93				05/10/93			
CHEMICAL PARAMETERS	RESULTS	UNITS	L	VQ	RESULTS	UNITS	L	VQ	RESULTS	UNITS	L	VQ
Volatile Organics												
Bromodichloromethane	12.000	ug/kg	C	U	12.000	ug/kg	C	U	12.000	ug/kg	C	U
Bromoform	12.000	ug/kg	C	U	12.000	ug/kg	C	U	12.000	ug/kg	C	U
Bromomethane	12.000	ug/kg	C	UJ	12.000	ug/kg	C	UJ	12.000	ug/kg	C	U
Carbon Tetrachloride	12.000	ug/kg	C	U	12.000	ug/kg	C	U	12.000	ug/kg	C	U
Carbon disulfide	12.000	ug/kg	C	U	12.000	ug/kg	C	U	12.000	ug/kg	C	U
Chlorobenzene	12.000	ug/kg	C	U	12.000	ug/kg	C	U	12.000	ug/kg	C	U
Chloroethane	12.000	ug/kg	C	U	12.000	ug/kg	C	U	12.000	ug/kg	C	U
Chloroform	12.000	ug/kg	C	U	12.000	ug/kg	C	U	12.000	ug/kg	C	U
Chloromethane	12.000	ug/kg	C	UJ	12.000	ug/kg	C	UJ	12.000	ug/kg	C	UJ
Dibromochloromethane	12.000	ug/kg	C	U	12.000	ug/kg	C	U	12.000	ug/kg	C	U
Ethylbenzene	12.000	ug/kg	C	U	12.000	ug/kg	C	U	12.000	ug/kg	C	U
Methylene chloride	13.000	ug/kg	C	U	14.000	ug/kg	C	U	12.000	ug/kg	C	UJ
Styrene	12.000	ug/kg	C	U	12.000	ug/kg	C	U	12.000	ug/kg	C	U
Tetrachloroethene	12.000	ug/kg	C	U	12.000	ug/kg	C	U	12.000	ug/kg	C	UJ
Toluene	12.000	ug/kg	C	U	3.000	ug/kg	C	J	12.000	ug/kg	C	U
Trichloroethene	12.000	ug/kg	C	U	12.000	ug/kg	C	U	12.000	ug/kg	C	U
Vinyl Acetate	12.000	ug/kg	C	U	12.000	ug/kg	C	U	NA			
Vinyl chloride	12.000	ug/kg	C	U	12.000	ug/kg	C	U	12.000	ug/kg	C	U
Xylenes, Total	12.000	ug/kg	C	U	12.000	ug/kg	C	U	12.000	ug/kg	C	U
cis-1,3-Dichloropropene	12.000	ug/kg	C	U	12.000	ug/kg	C	U	12.000	ug/kg	C	U
trans-1,3-Dichloropropene	12.000	ug/kg	C	U	12.000	ug/kg	C	U	12.000	ug/kg	C	U
Semivolatile Organics												
1,2,4-Trichlorobenzene	400.000	ug/kg	C	U	390.000	ug/kg	C	U	400.000	ug/kg	C	U
1,2-Dichlorobenzene	400.000	ug/kg	C	U	390.000	ug/kg	C	U	400.000	ug/kg	C	U
1,3-Dichlorobenzene	400.000	ug/kg	C	U	390.000	ug/kg	C	U	400.000	ug/kg	C	U
1,4-Dichlorobenzene	400.000	ug/kg	C	U	390.000	ug/kg	C	U	400.000	ug/kg	C	U
2,4,5-Trichlorophenol	960.000	ug/kg	C	U	940.000	ug/kg	C	U	960.000	ug/kg	C	U
2,4,6-Trichlorophenol	400.000	ug/kg	C	U	390.000	ug/kg	C	U	400.000	ug/kg	C	U
2,4-Dichlorophenol	400.000	ug/kg	C	U	390.000	ug/kg	C	U	400.000	ug/kg	C	U
2,4-Dimethylphenol	400.000	ug/kg	C	U	390.000	ug/kg	C	U	400.000	ug/kg	C	U
2,4-Dinitrophenol	960.000	ug/kg	C	U	940.000	ug/kg	C	U	960.000	ug/kg	C	U
2,4-Dinitrotoluene	400.000	ug/kg	C	U	390.000	ug/kg	C	U	400.000	ug/kg	C	U
2,6-Dinitrotoluene	400.000	ug/kg	C	U	390.000	ug/kg	C	U	400.000	ug/kg	C	U
2-Chloronaphthalene	400.000	ug/kg	C	U	390.000	ug/kg	C	U	400.000	ug/kg	C	U
2-Chlorophenol	400.000	ug/kg	C	U	390.000	ug/kg	C	U	400.000	ug/kg	C	U
2-Methylnaphthalene	400.000	ug/kg	C	U	390.000	ug/kg	C	U	400.000	ug/kg	C	U
2-Methylphenol	400.000	ug/kg	C	U	390.000	ug/kg	C	U	400.000	ug/kg	C	U
2-Nitroaniline	960.000	ug/kg	C	U	940.000	ug/kg	C	U	960.000	ug/kg	C	U
2-Nitrophenol	400.000	ug/kg	C	U	390.000	ug/kg	C	U	400.000	ug/kg	C	U
3,3'-Dichlorobenzidine	400.000	ug/kg	C	UJ	390.000	ug/kg	C	UJ	400.000	ug/kg	C	U

TABLE C-6A
(Continued)

PHASE II - CHEMICAL PARAMETERS

BORING NUMBER	1989			1989			1990		
SAMPLE NUMBER	115362			115363			115329		
	2.5-5			12.5-15			6-9		
SAMPLING DATE	05/14/93			05/14/93			05/10/93		
CHEMICAL PARAMETERS	RESULTS	UNITS L	VQ	RESULTS	UNITS L	VQ	RESULTS	UNITS L	VQ
Semivolatile Organics									
3-Nitroaniline	960.000	ug/kg C	UJ	940.000	ug/kg C	UJ	960.000	ug/kg C	U
4,6-Dinitro-2-methylphenol	960.000	ug/kg C	U	940.000	ug/kg C	U	960.000	ug/kg C	U
4-Bromophenyl phenyl ether	400.000	ug/kg C	U	390.000	ug/kg C	U	400.000	ug/kg C	U
4-Chloro-3-methylphenol	400.000	ug/kg C	U	390.000	ug/kg C	U	400.000	ug/kg C	U
4-Chlorophenylphenyl ether	400.000	ug/kg C	U	390.000	ug/kg C	U	400.000	ug/kg C	U
4-Methylphenol	140.000	ug/kg C	J	390.000	ug/kg C	U	400.000	ug/kg C	U
4-Nitroaniline	960.000	ug/kg C	U	940.000	ug/kg C	U	960.000	ug/kg C	U
4-Nitrophenol	960.000	ug/kg C	U	940.000	ug/kg C	U	960.000	ug/kg C	U
Acenaphthene	90.000	ug/kg C	J	390.000	ug/kg C	U	260.000	ug/kg C	J
Acenaphthylene	400.000	ug/kg C	U	390.000	ug/kg C	U	400.000	ug/kg C	U
Anthracene	400.000	ug/kg C	U	390.000	ug/kg C	U	260.000	ug/kg C	J
Benzo(a)anthracene	170.000	ug/kg C	J	390.000	ug/kg C	U	460.000	ug/kg C	-
Benzo(a)pyrene	110.000	ug/kg C	J	390.000	ug/kg C	U	420.000	ug/kg C	-
Benzo(b)fluoranthene	220.000	ug/kg C	J	390.000	ug/kg C	U	530.000	ug/kg C	-
Benzo(g,h,i)perylene	64.000	ug/kg C	J	390.000	ug/kg C	U	170.000	ug/kg C	J
Benzo(k)fluoranthene	400.000	ug/kg C	U	390.000	ug/kg C	U	210.000	ug/kg C	J
Benzoic acid	NA			NA			1900.000	ug/kg C	UJ
Benzyl alcohol	NA			NA			400.000	ug/kg C	U
Butyl benzyl phthalate	400.000	ug/kg C	U	390.000	ug/kg C	U	400.000	ug/kg C	U
Carbazole	400.000	ug/kg C	U	390.000	ug/kg C	U	180.000	ug/kg C	J
Chrysene	140.000	ug/kg C	J	390.000	ug/kg C	U	460.000	ug/kg C	-
Di-n-butyl phthalate	170.000	ug/kg C	J	71.000	ug/kg C	J	400.000	ug/kg C	U
Di-n-octyl phthalate	400.000	ug/kg C	U	390.000	ug/kg C	U	400.000	ug/kg C	U
Dibenzo(a,h)anthracene	400.000	ug/kg C	U	390.000	ug/kg C	U	68.000	ug/kg C	J
Dibenzofuran	400.000	ug/kg C	U	390.000	ug/kg C	U	170.000	ug/kg C	J
Diethyl phthalate	400.000	ug/kg C	U	390.000	ug/kg C	U	400.000	ug/kg C	U
Dimethyl phthalate	400.000	ug/kg C	U	390.000	ug/kg C	U	400.000	ug/kg C	U
Fluoranthene	340.000	ug/kg C	J	390.000	ug/kg C	U	1200.000	ug/kg C	-
Fluorene	400.000	ug/kg C	U	390.000	ug/kg C	U	210.000	ug/kg C	J
Hexachlorobenzene	400.000	ug/kg C	U	390.000	ug/kg C	U	400.000	ug/kg C	U
Hexachlorobutadiene	400.000	ug/kg C	U	390.000	ug/kg C	U	400.000	ug/kg C	U
Hexachlorocyclopentadiene	400.000	ug/kg C	U	390.000	ug/kg C	U	400.000	ug/kg C	U
Hexachloroethane	400.000	ug/kg C	U	390.000	ug/kg C	U	400.000	ug/kg C	U
Indeno(1,2,3-cd)pyrene	67.000	ug/kg C	J	390.000	ug/kg C	U	280.000	ug/kg C	J
Isophorone	400.000	ug/kg C	U	390.000	ug/kg C	U	400.000	ug/kg C	U
N-Nitroso-di-n-propylamine	400.000	ug/kg C	U	390.000	ug/kg C	U	400.000	ug/kg C	UJ
N-Nitrosodiphenylamine	400.000	ug/kg C	U	390.000	ug/kg C	U	400.000	ug/kg C	U
Naphthalene	400.000	ug/kg C	U	390.000	ug/kg C	U	46.000	ug/kg C	J
Nitrobenzene	400.000	ug/kg C	U	390.000	ug/kg C	U	400.000	ug/kg C	U
Pentachlorophenol	960.000	ug/kg C	U	940.000	ug/kg C	U	960.000	ug/kg C	U
Phenanthrene	260.000	ug/kg C	J	390.000	ug/kg C	U	1200.000	ug/kg C	-
Phenol	400.000	ug/kg C	U	390.000	ug/kg C	U	400.000	ug/kg C	U

TABLE C-6A
(Continued)

PHASE II - CHEMICAL PARAMETERS

BORING NUMBER	1989			1989			1990		
SAMPLE NUMBER	115362			115363			115329		
	2.5-5			12.5-15			6-9		
SAMPLING DATE	05/14/93			05/14/93			05/10/93		
CHEMICAL PARAMETERS	RESULTS	UNITS L	VQ	RESULTS	UNITS L	VQ	RESULTS	UNITS L	VQ
Semivolatile Organics									
Pyrene	270.000	ug/kg C	J	390.000	ug/kg C	U	900.000	ug/kg C	-
bis(2-Chloroethoxy)methane	400.000	ug/kg C	U	390.000	ug/kg C	U	400.000	ug/kg C	U
bis(2-Chloroethyl)ether	400.000	ug/kg C	U	390.000	ug/kg C	U	400.000	ug/kg C	U
bis(2-Chloroisopropyl) ether	400.000	ug/kg C	U	390.000	ug/kg C	U	400.000	ug/kg C	UJ
bis(2-Ethylhexyl) phthalate	450.000	ug/kg C	U	390.000	ug/kg C	U	1100.000	ug/kg C	-
p-Chloroaniline	400.000	ug/kg C	UJ	390.000	ug/kg C	UJ	400.000	ug/kg C	U
Pesticide Organics/PCBs									
4,4'-DDD	3.900	ug/kg C	UJ	3.800	ug/kg C	UJ	4.000	ug/kg C	U
4,4'-DDE	3.900	ug/kg C	U	3.800	ug/kg C	U	4.000	ug/kg C	U
4,4'-DDT	3.900	ug/kg C	U	3.800	ug/kg C	U	4.000	ug/kg C	U
Aldrin	2.000	ug/kg C	U	2.000	ug/kg C	U	2.100	ug/kg C	U
Aroclor-1016	39.000	ug/kg C	UJ	38.000	ug/kg C	U	40.000	ug/kg C	U
Aroclor-1221	80.000	ug/kg C	UJ	78.000	ug/kg C	U	81.000	ug/kg C	U
Aroclor-1232	39.000	ug/kg C	UJ	38.000	ug/kg C	U	40.000	ug/kg C	U
Aroclor-1242	39.000	ug/kg C	UJ	38.000	ug/kg C	U	40.000	ug/kg C	U
Aroclor-1248	39.000	ug/kg C	UJ	38.000	ug/kg C	U	40.000	ug/kg C	U
Aroclor-1254	39.000	ug/kg C	UJ	38.000	ug/kg C	U	40.000	ug/kg C	U
Aroclor-1260	150.000	ug/kg C	UJ	38.000	ug/kg C	U	40.000	ug/kg C	U
Dieldrin	3.900	ug/kg C	U	3.800	ug/kg C	U	4.000	ug/kg C	U
Endosulfan II	3.900	ug/kg C	U	3.800	ug/kg C	U	4.000	ug/kg C	U
Endosulfan sulfate	3.900	ug/kg C	U	3.800	ug/kg C	U	9.400	ug/kg C	J
Endosulfan-I	2.000	ug/kg C	U	2.000	ug/kg C	U	2.100	ug/kg C	U
Endrin	3.900	ug/kg C	U	3.800	ug/kg C	U	4.000	ug/kg C	U
Endrin aldehyde	3.900	ug/kg C	UJ	3.800	ug/kg C	UJ	4.000	ug/kg C	U
Endrin ketone	3.900	ug/kg C	U	3.800	ug/kg C	U	5.700	ug/kg C	J
Heptachlor	2.000	ug/kg C	U	2.000	ug/kg C	U	2.100	ug/kg C	U
Heptachlor epoxide	2.000	ug/kg C	U	2.000	ug/kg C	U	2.100	ug/kg C	U
Methoxychlor	20.000	ug/kg C	U	20.000	ug/kg C	U	21.000	ug/kg C	U
Toxaphene	200.000	ug/kg C	UJ	200.000	ug/kg C	U	210.000	ug/kg C	U
alpha-BHC	2.000	ug/kg C	U	2.000	ug/kg C	U	2.100	ug/kg C	U
alpha-Chlordane	2.000	ug/kg C	U	2.000	ug/kg C	U	2.100	ug/kg C	U
beta-BHC	2.000	ug/kg C	U	2.000	ug/kg C	U	2.100	ug/kg C	U
delta-BHC	2.000	ug/kg C	U	2.000	ug/kg C	U	2.100	ug/kg C	U
gamma-BHC (Lindane)	2.000	ug/kg C	U	2.000	ug/kg C	U	2.100	ug/kg C	U
gamma-Chlordane	2.000	ug/kg C	U	2.000	ug/kg C	U	2.100	ug/kg C	U

000209

TABLE C-6A
(Continued)

PHASE II - CHEMICAL PARAMETERS

BORING NUMBER	1990			1991			1991		
SAMPLE NUMBER	115335			115319			115321		
	17.5-20			7.5-10			12-15		
SAMPLING DATE	05/10/93			05/06/93			05/06/93		
CHEMICAL PARAMETERS	RESULTS	UNITS L	VQ	RESULTS	UNITS L	VQ	RESULTS	UNITS L	VQ
Inorganics									
Aluminum	7370.000	mg/kg C	-	10500.000	mg/kg C	-	16900.000	mg/kg C	-
Antimony	0.860	mg/kg C	UJ	0.450	mg/kg C	UJ	0.230	mg/kg C	UJ
Arsenic	4.400	mg/kg C	-	13.900	mg/kg C	-	8.300	mg/kg C	-
Barium	93.000	mg/kg C	J	81.900	mg/kg C	J	119.000	mg/kg C	J
Beryllium	1.000	mg/kg C	J	0.690	mg/kg C	-	0.840	mg/kg C	-
Cadmium	0.440	mg/kg C	U	0.940	mg/kg C	-	1.200	mg/kg C	-
Calcium	119000.000	mg/kg C	-	61000.000	mg/kg C	J	46100.000	mg/kg C	J
Chromium	11.400	mg/kg C	-	13.900	mg/kg C	-	18.800	mg/kg C	-
Cobalt	6.800	mg/kg C	-	9.100	mg/kg C	-	10.400	mg/kg C	-
Copper	15.000	mg/kg C	J	25.800	mg/kg C	J	24.200	mg/kg C	J
Cyanide	0.110	mg/kg C	R	0.120	mg/kg C	U	0.120	mg/kg C	U
Iron	15600.000	mg/kg C	-	17300.000	mg/kg C	J	25200.000	mg/kg C	J
Lead	8.600	mg/kg C	-	17.300	mg/kg C	J	13.600	mg/kg C	J
Magnesium	30000.000	mg/kg C	-	19000.000	mg/kg C	J	20500.000	mg/kg C	J
Manganese	349.000	mg/kg C	J	622.000	mg/kg C	J	480.000	mg/kg C	J
Mercury	0.110	mg/kg C	U	0.120	mg/kg C	U	0.240	mg/kg C	-
Molybdenum	2.200	mg/kg C	-	1.300	mg/kg C	U	2.200	mg/kg C	U
Nickel	18.000	mg/kg C	-	17.700	mg/kg C	-	22.200	mg/kg C	-
Potassium	1750.000	mg/kg C	J	1360.000	mg/kg C	J	1880.000	mg/kg C	J
Selenium	0.220	mg/kg C	UJ	0.240	mg/kg C	UJ	0.230	mg/kg C	UJ
Silicon	617.000	mg/kg C	J	815.000	mg/kg C	-	819.000	mg/kg C	-
Silver	0.440	mg/kg C	U	0.480	mg/kg C	U	0.470	mg/kg C	U
Sodium	189.000	mg/kg C	J	203.000	mg/kg C	-	156.000	mg/kg C	-
Thallium	0.260	mg/kg C	-	0.240	mg/kg C	U	0.230	mg/kg C	U
Vanadium	19.300	mg/kg C	J	24.700	mg/kg C	J	29.600	mg/kg C	J
Zinc	37.700	mg/kg C	J	56.600	mg/kg C	J	63.300	mg/kg C	J
Volatile Organics									
1,1,1-Trichloroethane	11.000	ug/kg C	U	12.000	ug/kg C	U	11.000	ug/kg C	U
1,1,2,2-Tetrachloroethane	11.000	ug/kg C	R	12.000	ug/kg C	U	11.000	ug/kg C	U
1,1,2-Trichloroethane	11.000	ug/kg C	U	12.000	ug/kg C	U	11.000	ug/kg C	U
1,1-Dichloroethane	11.000	ug/kg C	U	12.000	ug/kg C	U	11.000	ug/kg C	U
1,1-Dichloroethene	11.000	ug/kg C	U	12.000	ug/kg C	U	11.000	ug/kg C	U
1,2-Dichloroethane	11.000	ug/kg C	U	12.000	ug/kg C	U	11.000	ug/kg C	U
1,2-Dichloroethene	11.000	ug/kg C	U	12.000	ug/kg C	U	11.000	ug/kg C	U
1,2-Dichloropropane	11.000	ug/kg C	U	12.000	ug/kg C	U	11.000	ug/kg C	U
2-Butanone	11.000	ug/kg C	U	12.000	ug/kg C	U	11.000	ug/kg C	U
2-Hexanone	11.000	ug/kg C	U	12.000	ug/kg C	U	11.000	ug/kg C	U
4-Methyl-2-pentanone	11.000	ug/kg C	U	12.000	ug/kg C	U	11.000	ug/kg C	U
Acetone	32.000	ug/kg C	R	12.000	ug/kg C	UJ	11.000	ug/kg C	UJ
Benzene	11.000	ug/kg C	U	12.000	ug/kg C	U	11.000	ug/kg C	U

TABLE C-6A
(Continued)

PHASE II - CHEMICAL PARAMETERS

BORING NUMBER	1990				1991				1991			
SAMPLE NUMBER	115335				115319				115321			
	17.5-20				7.5-10				12-15			
SAMPLING DATE	05/10/93				05/06/93				05/06/93			
CHEMICAL PARAMETERS	RESULTS	UNITS	L	VQ	RESULTS	UNITS	L	VQ	RESULTS	UNITS	L	VQ
Volatile Organics												
Bromodichloromethane	11.000	ug/kg	C	U	12.000	ug/kg	C	U	11.000	ug/kg	C	U
Bromoform	11.000	ug/kg	C	U	12.000	ug/kg	C	U	11.000	ug/kg	C	U
Bromomethane	11.000	ug/kg	C	U	12.000	ug/kg	C	U	11.000	ug/kg	C	U
Carbon Tetrachloride	11.000	ug/kg	C	U	12.000	ug/kg	C	U	11.000	ug/kg	C	U
Carbon disulfide	11.000	ug/kg	C	U	12.000	ug/kg	C	U	11.000	ug/kg	C	U
Chlorobenzene	11.000	ug/kg	C	U	12.000	ug/kg	C	U	11.000	ug/kg	C	U
Chloroethane	11.000	ug/kg	C	U	12.000	ug/kg	C	U	11.000	ug/kg	C	U
Chloroform	11.000	ug/kg	C	U	12.000	ug/kg	C	U	11.000	ug/kg	C	U
Chloromethane	11.000	ug/kg	C	U	12.000	ug/kg	C	UJ	11.000	ug/kg	C	UJ
Dibromochloromethane	11.000	ug/kg	C	U	12.000	ug/kg	C	U	11.000	ug/kg	C	U
Ethylbenzene	11.000	ug/kg	C	U	12.000	ug/kg	C	U	11.000	ug/kg	C	U
Methylene chloride	13.000	ug/kg	C	UJ	12.000	ug/kg	C	U	11.000	ug/kg	C	U
Styrene	11.000	ug/kg	C	U	12.000	ug/kg	C	U	11.000	ug/kg	C	U
Tetrachloroethene	11.000	ug/kg	C	U	12.000	ug/kg	C	U	11.000	ug/kg	C	U
Toluene	5.000	ug/kg	C	J	2.000	ug/kg	C	U	11.000	ug/kg	C	U
Trichloroethene	11.000	ug/kg	C	U	12.000	ug/kg	C	U	11.000	ug/kg	C	U
Vinyl Acetate	NA				12.000	ug/kg	C	U	11.000	ug/kg	C	U
Vinyl chloride	11.000	ug/kg	C	U	12.000	ug/kg	C	U	11.000	ug/kg	C	U
Xylenes, Total	11.000	ug/kg	C	U	12.000	ug/kg	C	U	11.000	ug/kg	C	U
cis-1,3-Dichloropropene	11.000	ug/kg	C	U	12.000	ug/kg	C	U	11.000	ug/kg	C	U
trans-1,3-Dichloropropene	11.000	ug/kg	C	U	12.000	ug/kg	C	UJ	11.000	ug/kg	C	UJ
Semivolatile Organics												
1,2,4-Trichlorobenzene	370.000	ug/kg	C	U	400.000	ug/kg	C	U	370.000	ug/kg	C	U
1,2-Dichlorobenzene	370.000	ug/kg	C	U	400.000	ug/kg	C	U	370.000	ug/kg	C	U
1,3-Dichlorobenzene	370.000	ug/kg	C	U	400.000	ug/kg	C	U	370.000	ug/kg	C	U
1,4-Dichlorobenzene	370.000	ug/kg	C	U	400.000	ug/kg	C	U	370.000	ug/kg	C	U
2,4,5-Trichlorophenol	890.000	ug/kg	C	U	980.000	ug/kg	C	U	910.000	ug/kg	C	U
2,4,6-Trichlorophenol	370.000	ug/kg	C	U	400.000	ug/kg	C	U	370.000	ug/kg	C	U
2,4-Dichlorophenol	370.000	ug/kg	C	U	400.000	ug/kg	C	U	370.000	ug/kg	C	U
2,4-Dimethylphenol	370.000	ug/kg	C	U	400.000	ug/kg	C	U	370.000	ug/kg	C	U
2,4-Dinitrophenol	890.000	ug/kg	C	UJ	980.000	ug/kg	C	UJ	910.000	ug/kg	C	UJ
2,4-Dinitrotoluene	370.000	ug/kg	C	U	400.000	ug/kg	C	U	370.000	ug/kg	C	U
2,6-Dinitrotoluene	370.000	ug/kg	C	U	400.000	ug/kg	C	U	370.000	ug/kg	C	U
2-Chloronaphthalene	370.000	ug/kg	C	U	400.000	ug/kg	C	U	370.000	ug/kg	C	U
2-Chlorophenol	370.000	ug/kg	C	U	400.000	ug/kg	C	U	370.000	ug/kg	C	U
2-Methylnaphthalene	370.000	ug/kg	C	U	400.000	ug/kg	C	U	370.000	ug/kg	C	U
2-Methylphenol	370.000	ug/kg	C	U	400.000	ug/kg	C	U	370.000	ug/kg	C	U
2-Nitroaniline	890.000	ug/kg	C	UJ	980.000	ug/kg	C	U	910.000	ug/kg	C	U
2-Nitrophenol	370.000	ug/kg	C	U	400.000	ug/kg	C	U	370.000	ug/kg	C	U
3,3'-Dichlorobenzidine	370.000	ug/kg	C	UJ	400.000	ug/kg	C	UJ	370.000	ug/kg	C	UJ

000242

TABLE C-6A
(Continued)

PHASE II - CHEMICAL PARAMETERS

BORING NUMBER	1990			1991			1991		
SAMPLE NUMBER	115335			115319			115321		
	17.5-20			7.5-10			12-15		
SAMPLING DATE	05/10/93			05/06/93			05/06/93		
CHEMICAL PARAMETERS	RESULTS	UNITS L	VQ	RESULTS	UNITS L	VQ	RESULTS	UNITS L	VQ
Semivolatile Organics									
3-Nitroaniline	890.000	ug/kg C	UJ	980.000	ug/kg C	UJ	910.000	ug/kg C	UJ
4,6-Dinitro-2-methylphenol	890.000	ug/kg C	UJ	980.000	ug/kg C	U	910.000	ug/kg C	U
4-Bromophenyl phenyl ether	370.000	ug/kg C	U	400.000	ug/kg C	U	370.000	ug/kg C	U
4-Chloro-3-methylphenol	370.000	ug/kg C	UJ	400.000	ug/kg C	U	370.000	ug/kg C	U
4-Chlorophenylphenyl ether	370.000	ug/kg C	U	400.000	ug/kg C	U	370.000	ug/kg C	U
4-Methylphenol	370.000	ug/kg C	U	400.000	ug/kg C	U	370.000	ug/kg C	U
4-Nitroaniline	890.000	ug/kg C	UJ	980.000	ug/kg C	UJ	910.000	ug/kg C	UJ
4-Nitrophenol	890.000	ug/kg C	UJ	980.000	ug/kg C	U	910.000	ug/kg C	U
Acenaphthene	370.000	ug/kg C	U	180.000	ug/kg C	J	370.000	ug/kg C	U
Acenaphthylene	370.000	ug/kg C	U	400.000	ug/kg C	U	370.000	ug/kg C	U
Anthracene	370.000	ug/kg C	U	300.000	ug/kg C	J	370.000	ug/kg C	U
Benzo(a)anthracene	370.000	ug/kg C	U	560.000	ug/kg C	-	370.000	ug/kg C	U
Benzo(a)pyrene	370.000	ug/kg C	U	470.000	ug/kg C	-	370.000	ug/kg C	U
Benzo(b)fluoranthene	370.000	ug/kg C	U	540.000	ug/kg C	-	370.000	ug/kg C	U
Benzo(g,h,i)perylene	370.000	ug/kg C	U	320.000	ug/kg C	J	370.000	ug/kg C	U
Benzo(k)fluoranthene	370.000	ug/kg C	U	410.000	ug/kg C	-	370.000	ug/kg C	U
Benzoic acid	890.000	ug/kg C	UJ	NA			NA		
Benzyl alcohol	370.000	ug/kg C	U	NA			NA		
Butyl benzyl phthalate	370.000	ug/kg C	U	400.000	ug/kg C	U	370.000	ug/kg C	U
Carbazole	370.000	ug/kg C	U	98.000	ug/kg C	J	370.000	ug/kg C	U
Chrysene	370.000	ug/kg C	U	640.000	ug/kg C	-	370.000	ug/kg C	U
Di-n-butyl phthalate	370.000	ug/kg C	U	400.000	ug/kg C	U	370.000	ug/kg C	U
Di-n-octyl phthalate	370.000	ug/kg C	U	400.000	ug/kg C	U	370.000	ug/kg C	U
Dibenzo(a,h)anthracene	370.000	ug/kg C	U	140.000	ug/kg C	J	370.000	ug/kg C	U
Dibenzofuran	370.000	ug/kg C	U	130.000	ug/kg C	J	370.000	ug/kg C	U
Diethyl phthalate	370.000	ug/kg C	U	400.000	ug/kg C	U	370.000	ug/kg C	U
Dimethyl phthalate	370.000	ug/kg C	U	400.000	ug/kg C	U	370.000	ug/kg C	U
Fluoranthene	370.000	ug/kg C	U	1800.000	ug/kg C	-	370.000	ug/kg C	U
Fluorene	370.000	ug/kg C	U	190.000	ug/kg C	J	370.000	ug/kg C	U
Hexachlorobenzene	370.000	ug/kg C	U	400.000	ug/kg C	U	370.000	ug/kg C	U
Hexachlorobutadiene	370.000	ug/kg C	U	400.000	ug/kg C	U	370.000	ug/kg C	U
Hexachlorocyclopentadiene	370.000	ug/kg C	U	400.000	ug/kg C	U	370.000	ug/kg C	U
Hexachloroethane	370.000	ug/kg C	U	400.000	ug/kg C	U	370.000	ug/kg C	U
Indeno(1,2,3-cd)pyrene	370.000	ug/kg C	U	320.000	ug/kg C	J	370.000	ug/kg C	U
Isophorone	370.000	ug/kg C	U	400.000	ug/kg C	U	370.000	ug/kg C	U
N-Nitroso-di-n-propylamine	370.000	ug/kg C	U	400.000	ug/kg C	U	370.000	ug/kg C	U
N-Nitrosodiphenylamine	370.000	ug/kg C	UJ	400.000	ug/kg C	U	370.000	ug/kg C	U
Naphthalene	370.000	ug/kg C	U	84.000	ug/kg C	J	370.000	ug/kg C	U
Nitrobenzene	370.000	ug/kg C	U	400.000	ug/kg C	U	370.000	ug/kg C	U
Pentachlorophenol	890.000	ug/kg C	U	980.000	ug/kg C	U	910.000	ug/kg C	U
Phenanthrene	370.000	ug/kg C	U	1500.000	ug/kg C	-	370.000	ug/kg C	U
Phenol	370.000	ug/kg C	U	400.000	ug/kg C	U	370.000	ug/kg C	U

TABLE C-6A
(Continued)

PHASE II - CHEMICAL PARAMETERS

BORING NUMBER	1990			1991			1991		
SAMPLE NUMBER	115335			115319			115321		
	17.5-20			7.5-10			12-15		
SAMPLING DATE	05/10/93			05/06/93			05/06/93		
CHEMICAL PARAMETERS	RESULTS	UNITS L	VQ	RESULTS	UNITS L	VQ	RESULTS	UNITS L	VQ
Semivolatile Organics									
Pyrene	370.000	ug/kg C	UJ	1300.000	ug/kg C	-	370.000	ug/kg C	U
bis(2-Chloroethoxy)methane	370.000	ug/kg C	U	400.000	ug/kg C	U	370.000	ug/kg C	U
bis(2-Chloroethyl)ether	370.000	ug/kg C	U	400.000	ug/kg C	U	370.000	ug/kg C	U
bis(2-Chloroisopropyl) ether	370.000	ug/kg C	U	400.000	ug/kg C	U	370.000	ug/kg C	U
bis(2-Ethylhexyl) phthalate	490.000	ug/kg C	-	300.000	ug/kg C	J	810.000	ug/kg C	-
p-Chloroaniline	370.000	ug/kg C	UJ	400.000	ug/kg C	U	370.000	ug/kg C	U
Pesticide Organics/PCBs									
4,4'-DDD	3.600	ug/kg C	UJ	4.000	ug/kg C	UJ	3.700	ug/kg C	UJ
4,4'-DDE	3.600	ug/kg C	UJ	4.000	ug/kg C	UJ	3.700	ug/kg C	UJ
4,4'-DDT	3.600	ug/kg C	UJ	4.000	ug/kg C	UJ	3.700	ug/kg C	UJ
Aldrin	1.900	ug/kg C	UJ	2.100	ug/kg C	UJ	1.900	ug/kg C	UJ
Aroclor-1016	36.000	ug/kg C	U	40.000	ug/kg C	UJ	37.000	ug/kg C	UJ
Aroclor-1221	74.000	ug/kg C	U	81.000	ug/kg C	UJ	76.000	ug/kg C	UJ
Aroclor-1232	36.000	ug/kg C	U	40.000	ug/kg C	UJ	37.000	ug/kg C	UJ
Aroclor-1242	36.000	ug/kg C	U	40.000	ug/kg C	UJ	37.000	ug/kg C	UJ
Aroclor-1248	36.000	ug/kg C	U	40.000	ug/kg C	UJ	37.000	ug/kg C	UJ
Aroclor-1254	36.000	ug/kg C	U	40.000	ug/kg C	UJ	37.000	ug/kg C	UJ
Aroclor-1260	36.000	ug/kg C	U	40.000	ug/kg C	UJ	37.000	ug/kg C	UJ
Dieldrin	3.600	ug/kg C	UJ	4.000	ug/kg C	UJ	3.700	ug/kg C	UJ
Endosulfan II	3.600	ug/kg C	UJ	6.200	ug/kg C	J	3.700	ug/kg C	UJ
Endosulfan sulfate	3.600	ug/kg C	UJ	4.000	ug/kg C	UJ	3.700	ug/kg C	UJ
Endosulfan-I	1.900	ug/kg C	UJ	3.000	ug/kg C	R	1.900	ug/kg C	UJ
Endrin	3.600	ug/kg C	UJ	4.000	ug/kg C	UJ	3.700	ug/kg C	UJ
Endrin aldehyde	3.600	ug/kg C	UJ	4.000	ug/kg C	UJ	3.700	ug/kg C	UJ
Endrin ketone	3.600	ug/kg C	UJ	4.000	ug/kg C	UJ	3.700	ug/kg C	UJ
Heptachlor	1.900	ug/kg C	UJ	2.100	ug/kg C	UJ	1.900	ug/kg C	UJ
Heptachlor epoxide	1.900	ug/kg C	UJ	2.100	ug/kg C	UJ	1.900	ug/kg C	UJ
Methoxychlor	19.000	ug/kg C	UJ	21.000	ug/kg C	UJ	19.000	ug/kg C	UJ
Toxaphene	190.000	ug/kg C	U	210.000	ug/kg C	UJ	190.000	ug/kg C	UJ
alpha-BHC	1.900	ug/kg C	UJ	2.100	ug/kg C	UJ	1.900	ug/kg C	UJ
alpha-Chlordane	1.900	ug/kg C	UJ	2.100	ug/kg C	UJ	1.900	ug/kg C	UJ
beta-BHC	1.900	ug/kg C	UJ	2.100	ug/kg C	UJ	1.900	ug/kg C	UJ
delta-BHC	1.900	ug/kg C	UJ	2.100	ug/kg C	UJ	1.900	ug/kg C	UJ
gamma-BHC (Lindane)	1.900	ug/kg C	UJ	2.100	ug/kg C	UJ	1.900	ug/kg C	UJ
gamma-Chlordane	1.900	ug/kg C	UJ	2.100	ug/kg C	UJ	1.900	ug/kg C	UJ

000243

TABLE C-6A
(Continued)

PHASE II - CHEMICAL PARAMETERS

BORING NUMBER	1992				1992				1993			
SAMPLE NUMBER	115343				115346				115339			
	7.5-10				17.5-20				2.5-5			
SAMPLING DATE	05/11/93				05/11/93				05/11/93			
CHEMICAL PARAMETERS	RESULTS	UNITS	L	VQ	RESULTS	UNITS	L	VQ	RESULTS	UNITS	L	VQ
Inorganics												
Aluminum	14200.000	mg/kg	C	-	9420.000	mg/kg	C	-	8260.000	mg/kg	C	-
Antimony	1.300	mg/kg	C	UJ	0.540	mg/kg	C	UJ	0.630	mg/kg	C	UJ
Arsenic	8.900	mg/kg	C	-	5.200	mg/kg	C	-	8.000	mg/kg	C	-
Barium	123.000	mg/kg	C	-	108.000	mg/kg	C	-	81.800	mg/kg	C	J
Beryllium	1.500	mg/kg	C	-	1.400	mg/kg	C	-	0.720	mg/kg	C	-
Cadmium	0.930	mg/kg	C	-	1.300	mg/kg	C	-	1.100	mg/kg	C	-
Calcium	56100.000	mg/kg	C	-	98400.000	mg/kg	C	-	83000.000	mg/kg	C	-
Chromium	36.900	mg/kg	C	-	13.200	mg/kg	C	-	10.300	mg/kg	C	-
Cobalt	11.200	mg/kg	C	-	11.800	mg/kg	C	-	7.600	mg/kg	C	-
Copper	16.700	mg/kg	C	-	16.300	mg/kg	C	-	14.600	mg/kg	C	J
Cyanide	0.120	mg/kg	C	R	1.000	mg/kg	C	J	0.120	mg/kg	C	U
Iron	21400.000	mg/kg	C	-	19600.000	mg/kg	C	-	17200.000	mg/kg	C	J
Lead	13.800	mg/kg	C	-	8.200	mg/kg	C	-	12.300	mg/kg	C	-
Magnesium	18000.000	mg/kg	C	-	28000.000	mg/kg	C	-	20900.000	mg/kg	C	-
Manganese	515.000	mg/kg	C	-	532.000	mg/kg	C	-	735.000	mg/kg	C	J
Mercury	0.120	mg/kg	C	U	0.100	mg/kg	C	U	0.110	mg/kg	C	U
Molybdenum	0.880	mg/kg	C	-	1.800	mg/kg	C	-	1.500	mg/kg	C	U
Nickel	22.600	mg/kg	C	-	21.400	mg/kg	C	-	16.200	mg/kg	C	-
Potassium	2020.000	mg/kg	C	-	2200.000	mg/kg	C	-	1120.000	mg/kg	C	J
Selenium	0.240	mg/kg	C	UJ	0.230	mg/kg	C	UJ	0.230	mg/kg	C	UJ
Silicon	734.000	mg/kg	C	J	868.000	mg/kg	C	J	1060.000	mg/kg	C	J
Silver	0.490	mg/kg	C	U	0.450	mg/kg	C	U	0.450	mg/kg	C	U
Sodium	168.000	mg/kg	C	-	187.000	mg/kg	C	-	146.000	mg/kg	C	J
Thallium	0.240	mg/kg	C	U	0.230	mg/kg	C	-	0.230	mg/kg	C	U
Vanadium	31.500	mg/kg	C	-	21.900	mg/kg	C	-	19.700	mg/kg	C	J
Zinc	53.100	mg/kg	C	-	47.800	mg/kg	C	-	40.700	mg/kg	C	J
Volatile Organics												
1,1,1-Trichloroethane	12.000	ug/kg	C	U	11.000	ug/kg	C	U	12.000	ug/kg	C	UJ
1,1,2,2-Tetrachloroethane	12.000	ug/kg	C	U	11.000	ug/kg	C	U	12.000	ug/kg	C	UJ
1,1,2-Trichloroethane	12.000	ug/kg	C	U	11.000	ug/kg	C	U	12.000	ug/kg	C	UJ
1,1-Dichloroethane	12.000	ug/kg	C	U	11.000	ug/kg	C	U	12.000	ug/kg	C	UJ
1,1-Dichloroethene	12.000	ug/kg	C	U	11.000	ug/kg	C	U	12.000	ug/kg	C	UJ
1,2-Dichloroethane	12.000	ug/kg	C	U	11.000	ug/kg	C	U	12.000	ug/kg	C	UJ
1,2-Dichloroethene	12.000	ug/kg	C	U	11.000	ug/kg	C	U	12.000	ug/kg	C	UJ
1,2-Dichloropropane	12.000	ug/kg	C	U	11.000	ug/kg	C	U	12.000	ug/kg	C	UJ
2-Butanone	12.000	ug/kg	C	R	11.000	ug/kg	C	UJ	12.000	ug/kg	C	UJ
2-Hexanone	12.000	ug/kg	C	UJ	11.000	ug/kg	C	U	12.000	ug/kg	C	UJ
4-Methyl-2-pentanone	12.000	ug/kg	C	U	11.000	ug/kg	C	U	12.000	ug/kg	C	UJ
Acetone	18.000	ug/kg	C	R	9.000	ug/kg	C	R	12.000	ug/kg	C	UJ
Benzene	12.000	ug/kg	C	U	11.000	ug/kg	C	U	12.000	ug/kg	C	UJ

TABLE C-6A
(Continued)

PHASE II - CHEMICAL PARAMETERS

BORING NUMBER	1992				1992				1993			
SAMPLE NUMBER	115343				115346				115339			
	7.5-10				17.5-20				2.5-5			
SAMPLING DATE	05/11/93				05/11/93				05/11/93			
CHEMICAL PARAMETERS	RESULTS	UNITS	L	VQ	RESULTS	UNITS	L	VQ	RESULTS	UNITS	L	VQ
Volatile Organics												
Bromodichloromethane	12.000	ug/kg	C	U	11.000	ug/kg	C	U	12.000	ug/kg	C	UJ
Bromoform	12.000	ug/kg	C	U	11.000	ug/kg	C	U	12.000	ug/kg	C	UJ
Bromomethane	12.000	ug/kg	C	U	11.000	ug/kg	C	U	12.000	ug/kg	C	UJ
Carbon Tetrachloride	12.000	ug/kg	C	U	11.000	ug/kg	C	U	12.000	ug/kg	C	UJ
Carbon disulfide	12.000	ug/kg	C	U	11.000	ug/kg	C	U	12.000	ug/kg	C	UJ
Chlorobenzene	12.000	ug/kg	C	U	11.000	ug/kg	C	U	12.000	ug/kg	C	UJ
Chloroethane	12.000	ug/kg	C	U	11.000	ug/kg	C	U	12.000	ug/kg	C	UJ
Chloroform	12.000	ug/kg	C	U	11.000	ug/kg	C	U	12.000	ug/kg	C	UJ
Chloromethane	12.000	ug/kg	C	UJ	11.000	ug/kg	C	UJ	12.000	ug/kg	C	UJ
Dibromochloromethane	12.000	ug/kg	C	U	11.000	ug/kg	C	U	12.000	ug/kg	C	UJ
Ethylbenzene	12.000	ug/kg	C	U	11.000	ug/kg	C	U	12.000	ug/kg	C	UJ
Methylene chloride	12.000	ug/kg	C	UJ	11.000	ug/kg	C	UJ	12.000	ug/kg	C	UJ
Styrene	12.000	ug/kg	C	U	11.000	ug/kg	C	U	12.000	ug/kg	C	UJ
Tetrachloroethene	1.000	ug/kg	C	J	11.000	ug/kg	C	U	12.000	ug/kg	C	UJ
Toluene	12.000	ug/kg	C	U	11.000	ug/kg	C	U	12.000	ug/kg	C	UJ
Trichloroethene	12.000	ug/kg	C	U	11.000	ug/kg	C	U	12.000	ug/kg	C	UJ
Vinyl Acetate	NA				NA				12.000	ug/kg	C	UJ
Vinyl chloride	12.000	ug/kg	C	U	11.000	ug/kg	C	U	12.000	ug/kg	C	UJ
Xylenes, Total	12.000	ug/kg	C	U	11.000	ug/kg	C	U	12.000	ug/kg	C	UJ
cis-1,3-Dichloropropene	12.000	ug/kg	C	U	11.000	ug/kg	C	U	12.000	ug/kg	C	UJ
trans-1,3-Dichloropropene	12.000	ug/kg	C	U	11.000	ug/kg	C	U	12.000	ug/kg	C	UJ
Semivolatile Organics												
1,2,4-Trichlorobenzene	410.000	ug/kg	C	U	370.000	ug/kg	C	U	390.000	ug/kg	C	U
1,2-Dichlorobenzene	410.000	ug/kg	C	U	370.000	ug/kg	C	U	390.000	ug/kg	C	U
1,3-Dichlorobenzene	410.000	ug/kg	C	U	370.000	ug/kg	C	U	390.000	ug/kg	C	U
1,4-Dichlorobenzene	410.000	ug/kg	C	U	370.000	ug/kg	C	U	390.000	ug/kg	C	U
2,4,5-Trichlorophenol	990.000	ug/kg	C	R	910.000	ug/kg	C	U	950.000	ug/kg	C	U
2,4,6-Trichlorophenol	410.000	ug/kg	C	R	370.000	ug/kg	C	U	390.000	ug/kg	C	U
2,4-Dichlorophenol	410.000	ug/kg	C	U	370.000	ug/kg	C	U	390.000	ug/kg	C	U
2,4-Dimethylphenol	410.000	ug/kg	C	U	370.000	ug/kg	C	U	390.000	ug/kg	C	U
2,4-Dinitrophenol	990.000	ug/kg	C	UJ	910.000	ug/kg	C	UJ	950.000	ug/kg	C	U
2,4-Dinitrotoluene	410.000	ug/kg	C	U	370.000	ug/kg	C	U	390.000	ug/kg	C	U
2,6-Dinitrotoluene	410.000	ug/kg	C	U	370.000	ug/kg	C	U	390.000	ug/kg	C	U
2-Chloronaphthalene	410.000	ug/kg	C	U	370.000	ug/kg	C	U	390.000	ug/kg	C	U
2-Chlorophenol	410.000	ug/kg	C	U	370.000	ug/kg	C	U	390.000	ug/kg	C	U
2-Methylnaphthalene	410.000	ug/kg	C	U	370.000	ug/kg	C	U	160.000	ug/kg	C	J
2-Methylphenol	410.000	ug/kg	C	U	370.000	ug/kg	C	U	390.000	ug/kg	C	U
2-Nitroaniline	990.000	ug/kg	C	UJ	910.000	ug/kg	C	UJ	950.000	ug/kg	C	U
2-Nitrophenol	410.000	ug/kg	C	U	370.000	ug/kg	C	U	390.000	ug/kg	C	U
3,3'-Dichlorobenzidine	410.000	ug/kg	C	UJ	370.000	ug/kg	C	UJ	390.000	ug/kg	C	U

000245

TABLE C-6A
(Continued)

PHASE II - CHEMICAL PARAMETERS

BORING NUMBER	1992				1992				1993			
SAMPLE NUMBER	115343				115346				115339			
	7.5-10				17.5-20				2.5-5			
SAMPLING DATE	05/11/93				05/11/93				05/11/93			
CHEMICAL PARAMETERS	RESULTS	UNITS	L	VQ	RESULTS	UNITS	L	VQ	RESULTS	UNITS	L	VQ
Semivolatile Organics												
3-Nitroaniline	990.000	ug/kg	C	UJ	910.000	ug/kg	C	UJ	950.000	ug/kg	C	U
4,6-Dinitro-2-methylphenol	990.000	ug/kg	C	UJ	910.000	ug/kg	C	UJ	950.000	ug/kg	C	U
4-Bromophenyl phenyl ether	410.000	ug/kg	C	U	370.000	ug/kg	C	U	390.000	ug/kg	C	U
4-Chloro-3-methylphenol	410.000	ug/kg	C	UJ	370.000	ug/kg	C	UJ	390.000	ug/kg	C	U
4-Chlorophenylphenyl ether	410.000	ug/kg	C	U	370.000	ug/kg	C	U	390.000	ug/kg	C	U
4-Methylphenol	410.000	ug/kg	C	U	370.000	ug/kg	C	U	390.000	ug/kg	C	U
4-Nitroaniline	990.000	ug/kg	C	UJ	910.000	ug/kg	C	UJ	950.000	ug/kg	C	U
4-Nitrophenol	990.000	ug/kg	C	UJ	910.000	ug/kg	C	UJ	950.000	ug/kg	C	U
Acenaphthene	47.000	ug/kg	C	J	370.000	ug/kg	C	U	290.000	ug/kg	C	J
Acenaphthylene	410.000	ug/kg	C	U	370.000	ug/kg	C	U	390.000	ug/kg	C	U
Anthracene	70.000	ug/kg	C	J	370.000	ug/kg	C	U	440.000	ug/kg	C	-
Benzo(a)anthracene	380.000	ug/kg	C	J	370.000	ug/kg	C	U	570.000	ug/kg	C	-
Benzo(a)pyrene	510.000	ug/kg	C	-	370.000	ug/kg	C	U	510.000	ug/kg	C	-
Benzo(b)fluoranthene	1200.000	ug/kg	C	-	370.000	ug/kg	C	U	630.000	ug/kg	C	-
Benzo(g,h,i)perylene	420.000	ug/kg	C	-	370.000	ug/kg	C	U	150.000	ug/kg	C	J
Benzo(k)fluoranthene	410.000	ug/kg	C	U	370.000	ug/kg	C	U	220.000	ug/kg	C	J
Benzoic acid	990.000	ug/kg	C	UJ	910.000	ug/kg	C	UJ	1900.000	ug/kg	C	U
Benzyl alcohol	410.000	ug/kg	C	U	370.000	ug/kg	C	U	390.000	ug/kg	C	U
Butyl benzyl phthalate	410.000	ug/kg	C	U	370.000	ug/kg	C	U	390.000	ug/kg	C	U
Carbazole	62.000	ug/kg	C	J	370.000	ug/kg	C	U	200.000	ug/kg	C	J
Chrysene	560.000	ug/kg	C	-	370.000	ug/kg	C	U	530.000	ug/kg	C	-
Di-n-butyl phthalate	410.000	ug/kg	C	U	370.000	ug/kg	C	U	390.000	ug/kg	C	U
Di-n-octyl phthalate	410.000	ug/kg	C	U	370.000	ug/kg	C	U	390.000	ug/kg	C	U
Dibenzo(a,h)anthracene	410.000	ug/kg	C	U	370.000	ug/kg	C	U	390.000	ug/kg	C	U
Dibenzofuran	410.000	ug/kg	C	U	370.000	ug/kg	C	U	240.000	ug/kg	C	J
Diethyl phthalate	410.000	ug/kg	C	U	370.000	ug/kg	C	U	390.000	ug/kg	C	U
Dimethyl phthalate	410.000	ug/kg	C	U	370.000	ug/kg	C	U	390.000	ug/kg	C	U
Fluoranthene	870.000	ug/kg	C	-	370.000	ug/kg	C	U	1200.000	ug/kg	C	-
Fluorene	410.000	ug/kg	C	U	370.000	ug/kg	C	U	370.000	ug/kg	C	J
Hexachlorobenzene	410.000	ug/kg	C	U	370.000	ug/kg	C	U	390.000	ug/kg	C	U
Hexachlorobutadiene	410.000	ug/kg	C	U	370.000	ug/kg	C	U	390.000	ug/kg	C	U
Hexachlorocyclopentadiene	410.000	ug/kg	C	U	370.000	ug/kg	C	U	390.000	ug/kg	C	U
Hexachloroethane	410.000	ug/kg	C	U	370.000	ug/kg	C	U	390.000	ug/kg	C	U
Indeno(1,2,3-cd)pyrene	260.000	ug/kg	C	J	370.000	ug/kg	C	U	320.000	ug/kg	C	J
Isophorone	410.000	ug/kg	C	U	370.000	ug/kg	C	U	390.000	ug/kg	C	U
N-Nitroso-di-n-propylamine	410.000	ug/kg	C	U	370.000	ug/kg	C	UJ	390.000	ug/kg	C	U
N-Nitrosodiphenylamine	410.000	ug/kg	C	UJ	370.000	ug/kg	C	UJ	390.000	ug/kg	C	U
Naphthalene	410.000	ug/kg	C	U	370.000	ug/kg	C	U	290.000	ug/kg	C	J
Nitrobenzene	410.000	ug/kg	C	U	370.000	ug/kg	C	U	390.000	ug/kg	C	U
Pentachlorophenol	990.000	ug/kg	C	R	910.000	ug/kg	C	UJ	950.000	ug/kg	C	U
Phenanthrene	490.000	ug/kg	C	-	370.000	ug/kg	C	U	1400.000	ug/kg	C	-
Phenol	410.000	ug/kg	C	U	370.000	ug/kg	C	U	390.000	ug/kg	C	U

TABLE C-6A
(Continued)

PHASE II - CHEMICAL PARAMETERS

BORING NUMBER	1992			1992			1993		
SAMPLE NUMBER	115343			115346			115339		
	7.5-10			17.5-20			2.5-5		
SAMPLING DATE	05/11/93			05/11/93			05/11/93		
CHEMICAL PARAMETERS	RESULTS	UNITS	L VQ	RESULTS	UNITS	L VQ	RESULTS	UNITS	L VQ
Semivolatile Organics									
Pyrene	790.000	ug/kg	C J	370.000	ug/kg	C UJ	890.000	ug/kg	C -
bis(2-Chloroethoxy)methane	410.000	ug/kg	C U	370.000	ug/kg	C U	390.000	ug/kg	C U
bis(2-Chloroethyl)ether	410.000	ug/kg	C U	370.000	ug/kg	C U	390.000	ug/kg	C U
bis(2-Chloroisopropyl) ether	410.000	ug/kg	C U	370.000	ug/kg	C U	390.000	ug/kg	C U
bis(2-Ethylhexyl) phthalate	340.000	ug/kg	C J	310.000	ug/kg	C J	800.000	ug/kg	C -
p-Chloroaniline	410.000	ug/kg	C UJ	370.000	ug/kg	C UJ	390.000	ug/kg	C U
Pesticide Organics/PCBs									
4,4'-DDD	4.200	ug/kg	C U	3.800	ug/kg	C U	3.900	ug/kg	C U
4,4'-DDE	4.200	ug/kg	C U	3.800	ug/kg	C U	3.900	ug/kg	C U
4,4'-DDT	4.200	ug/kg	C U	3.800	ug/kg	C U	3.900	ug/kg	C U
Aldrin	2.200	ug/kg	C U	2.000	ug/kg	C U	2.000	ug/kg	C U
Aroclor-1016	42.000	ug/kg	C U	38.000	ug/kg	C U	39.000	ug/kg	C U
Aroclor-1221	86.000	ug/kg	C U	77.000	ug/kg	C U	80.000	ug/kg	C U
Aroclor-1232	42.000	ug/kg	C U	38.000	ug/kg	C U	39.000	ug/kg	C U
Aroclor-1242	42.000	ug/kg	C U	38.000	ug/kg	C U	39.000	ug/kg	C U
Aroclor-1248	42.000	ug/kg	C U	38.000	ug/kg	C U	39.000	ug/kg	C U
Aroclor-1254	42.000	ug/kg	C U	38.000	ug/kg	C U	39.000	ug/kg	C U
Aroclor-1260	42.000	ug/kg	C U	38.000	ug/kg	C U	39.000	ug/kg	C U
Dieldrin	4.200	ug/kg	C U	3.800	ug/kg	C U	3.900	ug/kg	C U
Endosulfan II	4.200	ug/kg	C U	3.800	ug/kg	C U	3.900	ug/kg	C U
Endosulfan sulfate	4.200	ug/kg	C U	3.800	ug/kg	C U	3.900	ug/kg	C U
Endosulfan-I	2.200	ug/kg	C U	2.000	ug/kg	C U	2.000	ug/kg	C U
Endrin	4.200	ug/kg	C U	3.800	ug/kg	C U	3.900	ug/kg	C U
Endrin aldehyde	4.200	ug/kg	C U	3.800	ug/kg	C U	3.900	ug/kg	C U
Endrin ketone	4.200	ug/kg	C U	3.800	ug/kg	C U	3.900	ug/kg	C U
Heptachlor	2.200	ug/kg	C U	2.000	ug/kg	C U	2.000	ug/kg	C U
Heptachlor epoxide	2.200	ug/kg	C U	2.000	ug/kg	C U	2.000	ug/kg	C U
Methoxychlor	22.000	ug/kg	C U	20.000	ug/kg	C U	20.000	ug/kg	C U
Toxaphene	220.000	ug/kg	C U	200.000	ug/kg	C U	200.000	ug/kg	C U
alpha-BHC	2.200	ug/kg	C U	2.000	ug/kg	C U	2.000	ug/kg	C U
alpha-Chlordane	2.200	ug/kg	C U	2.000	ug/kg	C U	2.000	ug/kg	C U
beta-BHC	2.200	ug/kg	C U	2.000	ug/kg	C U	2.000	ug/kg	C U
delta-BHC	2.200	ug/kg	C U	2.000	ug/kg	C U	2.000	ug/kg	C U
gamma-BHC (Lindane)	2.200	ug/kg	C U	2.000	ug/kg	C U	2.000	ug/kg	C U
gamma-Chlordane	2.200	ug/kg	C U	2.000	ug/kg	C U	2.000	ug/kg	C U

000227

TABLE C-6A
(Continued)

PHASE II - CHEMICAL PARAMETERS

BORING NUMBER	1993				2951			
SAMPLE NUMBER	115340				111432			
	15-17.5				0-5.1			
SAMPLING DATE	05/11/93				04/21/93			
CHEMICAL PARAMETERS	RESULTS	UNITS	L	VQ	RESULTS	UNITS	L	VQ
Inorganics								
Aluminum	7450.000	mg/kg	C	-	NA			
Antimony	1.300	mg/kg	C	UJ	NA			
Arsenic	5.700	mg/kg	C	-	0.030	mg/L	C	UJ
Barium	53.200	mg/kg	C	-	1.140	mg/L	C	-
Beryllium	0.430	mg/kg	C	-	NA			
Cadmium	0.850	mg/kg	C	-	0.002	mg/L	C	U
Calcium	104000.000	mg/kg	C	-	NA			
Chromium	11.400	mg/kg	C	-	0.003	mg/L	C	U
Cobalt	8.100	mg/kg	C	-	NA			
Copper	16.200	mg/kg	C	J	NA			
Cyanide	0.110	mg/kg	C	U	NA			
Iron	16100.000	mg/kg	C	J	NA			
Lead	9.200	mg/kg	C	-	0.015	mg/L	C	UJ
Magnesium	26300.000	mg/kg	C	-	NA			
Manganese	395.000	mg/kg	C	J	NA			
Mercury	0.110	mg/kg	C	U	0.000	mg/L	C	UJ
Molybdenum	1.800	mg/kg	C	U	NA			
Nickel	17.100	mg/kg	C	-	NA			
Potassium	1370.000	mg/kg	C	J	NA			
Selenium	0.220	mg/kg	C	UJ	0.030	mg/L	C	UJ
Silicon	926.000	mg/kg	C	J	NA			
Silver	0.440	mg/kg	C	U	0.002	mg/L	C	UJ
Sodium	158.000	mg/kg	C	J	NA			
Thallium	0.290	mg/kg	C	-	NA			
Vanadium	17.700	mg/kg	C	J	NA			
Zinc	42.900	mg/kg	C	J	NA			
Volatile Organics								
1,1,1-Trichloroethane	12.000	ug/kg	C	UJ	15.000	ug/kg	C	U
1,1,2,2-Tetrachloroethane	12.000	ug/kg	C	UJ	15.000	ug/kg	C	U
1,1,2-Trichloroethane	12.000	ug/kg	C	UJ	15.000	ug/kg	C	U
1,1-Dichloroethane	12.000	ug/kg	C	UJ	15.000	ug/kg	C	U
1,1-Dichloroethene	12.000	ug/kg	C	UJ	15.000	ug/kg	C	U
1,2-Dichloroethane	12.000	ug/kg	C	UJ	15.000	ug/kg	C	U
1,2-Dichloroethene	12.000	ug/kg	C	R	15.000	ug/kg	C	U
1,2-Dichloropropane	12.000	ug/kg	C	UJ	15.000	ug/kg	C	U
2-Butanone	12.000	ug/kg	C	UJ	15.000	ug/kg	C	U
2-Hexanone	12.000	ug/kg	C	UJ	15.000	ug/kg	C	U
4-Methyl-2-pentanone	12.000	ug/kg	C	UJ	15.000	ug/kg	C	U
Acetone	12.000	ug/kg	C	UJ	15.000	ug/kg	C	J
Benzene	12.000	ug/kg	C	UJ	15.000	ug/kg	C	U

TABLE C-6A
(Continued)

PHASE II - CHEMICAL PARAMETERS

BORING NUMBER	1993				2951			
SAMPLE NUMBER	115340				111432			
	15-17.5				0-5.1			
SAMPLING DATE	05/11/93				04/21/93			
CHEMICAL PARAMETERS	RESULTS	UNITS	L	VQ	RESULTS	UNITS	L	VQ
Volatile Organics								
Bromodichloromethane	12.000	ug/kg	C	UJ	15.000	ug/kg	C	U
Bromoform	12.000	ug/kg	C	UJ	15.000	ug/kg	C	U
Bromomethane	12.000	ug/kg	C	UJ	15.000	ug/kg	C	U
Carbon Tetrachloride	12.000	ug/kg	C	UJ	15.000	ug/kg	C	U
Carbon disulfide	12.000	ug/kg	C	UJ	15.000	ug/kg	C	U
Chlorobenzene	12.000	ug/kg	C	UJ	15.000	ug/kg	C	U
Chloroethane	12.000	ug/kg	C	UJ	15.000	ug/kg	C	U
Chloroform	12.000	ug/kg	C	UJ	15.000	ug/kg	C	U
Chloromethane	12.000	ug/kg	C	UJ	15.000	ug/kg	C	U
Dibromochloromethane	12.000	ug/kg	C	UJ	15.000	ug/kg	C	U
Ethylbenzene	12.000	ug/kg	C	UJ	15.000	ug/kg	C	U
Methylene chloride	12.000	ug/kg	C	UJ	50.000	ug/kg	C	U
Styrene	12.000	ug/kg	C	UJ	15.000	ug/kg	C	U
Tetrachloroethene	12.000	ug/kg	C	UJ	15.000	ug/kg	C	U
Toluene	12.000	ug/kg	C	UJ	15.000	ug/kg	C	U
Trichloroethene	12.000	ug/kg	C	UJ	15.000	ug/kg	C	U
Vinyl Acetate	12.000	ug/kg	C	UJ	15.000	ug/kg	C	U
Vinyl chloride	12.000	ug/kg	C	UJ	15.000	ug/kg	C	U
Xylenes, Total	12.000	ug/kg	C	UJ	15.000	ug/kg	C	U
cis-1,3-Dichloropropene	12.000	ug/kg	C	UJ	15.000	ug/kg	C	U
trans-1,3-Dichloropropene	12.000	ug/kg	C	UJ	15.000	ug/kg	C	UJ
Semivolatile Organics								
1,2,4-Trichlorobenzene	370.000	ug/kg	C	U	NA			
1,2-Dichlorobenzene	370.000	ug/kg	C	U	NA			
1,3-Dichlorobenzene	370.000	ug/kg	C	U	NA			
1,4-Dichlorobenzene	370.000	ug/kg	C	U	NA			
2,4,5-Trichlorophenol	910.000	ug/kg	C	U	NA			
2,4,6-Trichlorophenol	370.000	ug/kg	C	U	NA			
2,4-Dichlorophenol	370.000	ug/kg	C	U	NA			
2,4-Dimethylphenol	370.000	ug/kg	C	U	NA			
2,4-Dinitrophenol	910.000	ug/kg	C	U	NA			
2,4-Dinitrotoluene	370.000	ug/kg	C	U	NA			
2,6-Dinitrotoluene	370.000	ug/kg	C	U	NA			
2-Chloronaphthalene	370.000	ug/kg	C	U	NA			
2-Chlorophenol	370.000	ug/kg	C	U	NA			
2-Methylnaphthalene	370.000	ug/kg	C	U	NA			
2-Methylphenol	370.000	ug/kg	C	U	NA			
2-Nitroaniline	910.000	ug/kg	C	U	NA			
2-Nitrophenol	370.000	ug/kg	C	U	NA			
3,3'-Dichlorobenzidine	370.000	ug/kg	C	U	NA			

TABLE C-6A
(Continued)

PHASE II - CHEMICAL PARAMETERS

BORING NUMBER	1993				2951			
SAMPLE NUMBER	115340				111432			
	15-17.5				0-5.1			
SAMPLING DATE	05/11/93				04/21/93			
CHEMICAL PARAMETERS	RESULTS	UNITS	L	VQ	RESULTS	UNITS	L	VQ
Semivolatile Organics								
3-Nitroaniline	910.000	ug/kg	C	U	NA			
4,6-Dinitro-2-methylphenol	910.000	ug/kg	C	U	NA			
4-Bromophenyl phenyl ether	370.000	ug/kg	C	U	NA			
4-Chloro-3-methylphenol	370.000	ug/kg	C	U	NA			
4-Chlorophenylphenyl ether	370.000	ug/kg	C	U	NA			
4-Methylphenol	370.000	ug/kg	C	U	NA			
4-Nitroaniline	910.000	ug/kg	C	U	NA			
4-Nitrophenol	910.000	ug/kg	C	U	NA			
Acenaphthene	370.000	ug/kg	C	U	NA			
Acenaphthylene	370.000	ug/kg	C	U	NA			
Anthracene	370.000	ug/kg	C	U	NA			
Benzo(a)anthracene	370.000	ug/kg	C	U	NA			
Benzo(a)pyrene	370.000	ug/kg	C	U	NA			
Benzo(b)fluoranthene	370.000	ug/kg	C	U	NA			
Benzo(g,h,i)perylene	370.000	ug/kg	C	U	NA			
Benzo(k)fluoranthene	370.000	ug/kg	C	U	NA			
Benzoic acid	1800.000	ug/kg	C	U	NA			
Benzyl alcohol	370.000	ug/kg	C	U	NA			
Butyl benzyl phthalate	370.000	ug/kg	C	U	NA			
Carbazole	370.000	ug/kg	C	U	NA			
Chrysene	370.000	ug/kg	C	U	NA			
Di-n-butyl phthalate	370.000	ug/kg	C	U	NA			
Di-n-octyl phthalate	370.000	ug/kg	C	U	NA			
Dibenzo(a,h)anthracene	370.000	ug/kg	C	U	NA			
Dibenzofuran	370.000	ug/kg	C	U	NA			
Diethyl phthalate	370.000	ug/kg	C	U	NA			
Dimethyl phthalate	370.000	ug/kg	C	U	NA			
Fluoranthene	370.000	ug/kg	C	U	NA			
Fluorene	370.000	ug/kg	C	U	NA			
Hexachlorobenzene	370.000	ug/kg	C	U	NA			
Hexachlorobutadiene	370.000	ug/kg	C	U	NA			
Hexachlorocyclopentadiene	370.000	ug/kg	C	U	NA			
Hexachloroethane	370.000	ug/kg	C	U	NA			
Indeno(1,2,3-cd)pyrene	370.000	ug/kg	C	U	NA			
Isophorone	370.000	ug/kg	C	U	NA			
N-Nitroso-di-n-propylamine	370.000	ug/kg	C	U	NA			
N-Nitrosodiphenylamine	370.000	ug/kg	C	U	NA			
Naphthalene	370.000	ug/kg	C	U	NA			
Nitrobenzene	370.000	ug/kg	C	U	NA			
Pentachlorophenol	910.000	ug/kg	C	U	NA			
Phenanthrene	370.000	ug/kg	C	U	NA			
Phenol	370.000	ug/kg	C	U	NA			

TABLE C-6A
(Continued)

PHASE II - CHEMICAL PARAMETERS

BORING NUMBER	1993				2951			
SAMPLE NUMBER	115340				111432			
	15-17.5				0-5.1			
SAMPLING DATE	05/11/93				04/21/93			
CHEMICAL PARAMETERS	RESULTS	UNITS	L	VQ	RESULTS	UNITS	L	VQ
Semivolatile Organics								
Pyrene	370.000	ug/kg	C	U	NA			
bis(2-Chloroethoxy)methane	370.000	ug/kg	C	U	NA			
bis(2-Chloroethyl)ether	370.000	ug/kg	C	U	NA			
bis(2-Chloroisopropyl) ether	370.000	ug/kg	C	U	NA			
bis(2-Ethylhexyl) phthalate	470.000	ug/kg	C	-	NA			
p-Chloroaniline	370.000	ug/kg	C	U	NA			
Pesticide Organics/PCBs								
4,4'-DDD	3.700	ug/kg	C	U	NA			
4,4'-DDE	3.700	ug/kg	C	U	NA			
4,4'-DDT	3.700	ug/kg	C	U	NA			
Aldrin	1.900	ug/kg	C	U	NA			
Aroclor-1016	37.000	ug/kg	C	U	NA			
Aroclor-1221	75.000	ug/kg	C	U	NA			
Aroclor-1232	37.000	ug/kg	C	U	NA			
Aroclor-1242	37.000	ug/kg	C	U	NA			
Aroclor-1248	37.000	ug/kg	C	U	NA			
Aroclor-1254	37.000	ug/kg	C	U	NA			
Aroclor-1260	37.000	ug/kg	C	U	NA			
Dieldrin	3.700	ug/kg	C	U	NA			
Endosulfan II	3.700	ug/kg	C	U	NA			
Endosulfan sulfate	3.700	ug/kg	C	U	NA			
Endosulfan-I	1.900	ug/kg	C	U	NA			
Endrin	3.700	ug/kg	C	U	NA			
Endrin aldehyde	3.700	ug/kg	C	U	NA			
Endrin ketone	3.700	ug/kg	C	U	NA			
Heptachlor	1.900	ug/kg	C	U	NA			
Heptachlor epoxide	1.900	ug/kg	C	U	NA			
Methoxychlor	19.000	ug/kg	C	U	NA			
Toxaphene	190.000	ug/kg	C	U	NA			
alpha-BHC	1.900	ug/kg	C	U	NA			
alpha-Chlordane	1.900	ug/kg	C	U	NA			
beta-BHC	1.900	ug/kg	C	U	NA			
delta-BHC	1.900	ug/kg	C	U	NA			
gamma-BHC (Lindane)	1.900	ug/kg	C	U	NA			
gamma-Chlordane	1.900	ug/kg	C	U	NA			

6508

TABLE C-6B
SOLID WASTE LANDFILL
TENTATIVELY IDENTIFIED COMPOUNDS
SUBSURFACE SOIL

Sample Number	Sample Location	Parameter	Result	Units
112507	1973	methane, chlorodifluoro-	140	ug/kg
115319	1991	3-penten-2-one	110	ug/kg
115319	1991	cyclopropane, 1,1,2,2,-tetram	140	ug/kg
115319	1991	1-heptanol, 2,4-dimethyl-,	97	ug/kg
115319	1991	hexane, 2-bromo	310	ug/kg
115319	1991	6h-cyclobuta[jk]phenanthrene	210	ug/kg
115319	1991	11h-benzo[A]fluorene	180	ug/kg
115319	1991	11h-benzo[A]fluorene	130	ug/kg
115319	1991	benzo[ghi]fluoranthene	110	ug/kg
115319	1991	benzo[c]phenanthrene	210	ug/kg
115319	1991	benzo[j]fluoranthene	100	ug/kg
115319	1991	benzo[j]fluoranthene	410	ug/kg
115321	1991	ethanone,1-cyclopropyl-	110	ug/kg
115321	1991	cyclopropane, 1,1,2,2-tetram	110	ug/kg
115321	1991	propanoic acid, 2-methyl-,1	110	ug/kg
111480	1983	pentacosane	330	ug/kg
111480	1983	pentacosane	620	ug/kg
111480	1983	pentacosane	810	ug/kg
111480	1983	pentacosane	690	ug/kg
111480	1983	pentacosane	480	ug/kg
111480	1983	pentacosane	280	ug/kg
111480	1983	octacosane	270	ug/kg
111484	1982	3-penten-2-one	170	ug/kg
111484	1982	3-pentatone, 2,4-dimethyl	17	ug/kg
111484	1982	cyclopentasiloxane, decameth	17	ug/kg
111484	1982	benzo[j]fluoranthene	130	ug/kg
111487	1982	cyclopropane, 1,1,2,2-tetram	83	ug/kg
111487	1982	propanoic acid, 2-methyl-, 1	79	ug/kg
115335	1990	glycene, n-methyl-n-(1-oxodo	130	ug/kg
115335	1990	decane, 2,3,7-trimetyl-	120	ug/kg
115335	1990	nonane, 3-methyl-5-propyl-	120	ug/kg
115335	1990	octane, 2,4,6-trimethyl-	130	ug/kg
115335	1990	octane, 2,4,6-trimethyl-	190	ug/kg
115335	1990	undecane, 3,8-dimethyl	240	ug/kg
115335	1990	decane, 6-ethyl-2-methyl	250	ug/kg
115335	1990	octane, 2,4,6-trimethyl-	410	ug/kg
115343	1992	anthracene, 2-methyl-	150	ug/kg
115343	1992	11h-benzo[a]fluorene	110	ug/kg
115343	1992	11h-benzo[a]fluorene	67	ug/kg
115343	1992	1-pentanol, 3-methyl-2-propy	61	ug/kg
115343	1992	1-pentanol, 3-methyl-2-propy	73	ug/kg
115343	1992	benzo[j]fluoranthene	190	ug/kg
115346	1992	heptane, 2-methyl-	360	ug/kg
115346	1992	undecane, 4,6-dimethyl	110	ug/kg
115346	1992	decane, 2,3,5-trimethyl-	360	ug/kg
115346	1992	decane, 2,3,7-trimethyl-	140	ug/kg
115346	1992	decane, 2,3,7-trimethyl-	160	ug/kg
115346	1992	undecane, 3,8-dimethyl-	160	ug/kg
115346	1992	decane, 2,3,5-trimethyl-	130	ug/kg
115346	1992	undecane, 5,7-dimethyl-	170	ug/kg
115346	1992	decane, 3,8-dimethyl-	200	ug/kg
115362	1989	octamethyl-	49	ug/kg
115362	1989	2,3-butanedione, monooxime	6400	ug/kg
115362	1989	pentacosane	3800	ug/kg
115362	1989	tetracosane	5100	ug/kg

TABLE C-6B
SOLID WASTE LANDFILL
TENTATIVELY IDENTIFIED COMPOUNDS
SUBSURFACE SOIL

Sample Number	Sample Location	Parameter	Result	Units
115362	1989	pentacosane	6600	ug/kg
115362	1989	pentacosane	5800	ug/kg
115362	1989	pentacosane	6300	ug/kg
115362	1989	pentacosane	5700	ug/kg
115362	1989	pentacosane	4300	ug/kg
115363	1989	pentacosane	130	ug/kg
115363	1989	tridecane, 2-methyl-	190	ug/kg
115363	1989	hexanedioic acid, mono(2-eth	330	ug/kg
115371	11037	dodecanamide, n,n-bis(2-hydr	150	ug/kg
115371	11037	pentacosane	280	ug/kg
115371	11037	pentacosane	340	ug/kg
115371	11037	pentacosane	300	ug/kg
115371	11037	phosphoric acid, tris(3-meth	330	ug/kg
115372	11037	pentacosane	170	ug/kg
115372	11037	heptadecane, 2,6-dimethyl-	170	ug/kg
115372	11037	octadecane	140	ug/kg
115372	11037	pentacosane	130	ug/kg
115372	11037	pentacosane	330	ug/kg
115372	11037	pentacosane	370	ug/kg
115372	11037	pentacosane	390	ug/kg
115372	11037	pentacosane	320	ug/kg
115380	11036	pentacosane	170	ug/kg
115380	11036	heptadecane, 2,6-dimethyl-	160	ug/kg
115380	11036	1,2-benzenedicarboxylic acid	460	ug/kg
115380	11036	heptadecane, 2,6-dimethyl-	170	ug/kg
115380	11036	pentacosane	270	ug/kg
115380	11036	pentacosane	220	ug/kg
115377	11038	2-cyclohexen-1-one, 3,5-dime	190	ug/kg
115377	11038	2-pentanone, 4-hydroxy-4-met	15000	ug/kg
115377	11038	2(5h)-furanone, 5,5-dimethyl	160	ug/kg
115377	11038	hexanoic acid	170	ug/kg
115377	11038	dodecanamide, n,n-bis(2-hydr	130	ug/kg
115377	11038	1,2-benzenedicarboxylic acid	360	ug/kg
115377	11038	pentadecane	210	ug/kg
115377	11038	pentadecane	420	ug/kg
115377	11038	pentadecane	480	ug/kg
115377	11038	pentadecane	230	ug/kg
115377	11038	pentadecane	210	ug/kg
115377	11038	heptadecane, 2,6-dimethyl-	100	ug/kg
115376	11038	2-cyclohexen-1-one, 3,5-dime	200	ug/kg
115376	11038	ethanone, 1-oxiranyl-	370	ug/kg
115376	11038	1,2-benzenedicarboxylic acid	190	ug/kg
115376	11038	11h-benzo[a]fluorene	93	ug/kg
115376	11038	benzo[j]fluoranthene	260	ug/kg
115381	11036	3-pentanone, 2,4-dimethyl-	14	ug/kg
115381	11036	phosphoric acid tributyl est	6800	ug/kg
115381	11036	1,2-benzenedicarboxylic acid	370	ug/kg
115381	11036	benzo[e]pyrene	190	ug/kg
115384	11039	benzene, 1-ethenyl-2-methyl-	11	ug/kg
115384	11039	dibenzothiophene	49000	ug/kg
115384	11039	benzo[q]quinoline	34000	ug/kg
115384	11039	phenanthrene, 3-methyl-	61000	ug/kg
115384	11039	anthracene, 2-methyl-	82000	ug/kg
115384	11039	phenanthrene, 3-methyl-	36000	ug/kg
115384	11039	6h-cyclobuta[jk]phenanthrene	130000	ug/kg
115384	11039	naphthalene, 2-phenyl-	52000	ug/kg
115384	11039	benzo[b]naphtho[2,3-d]furan	41000	ug/kg

6508

TABLE C-6B
SOLID WASTE LANDFILL
TENTATIVELY IDENTIFIED COMPOUNDS
SUBSURFACE SOIL

Sample Number	Sample Location	Parameter	Result	Units
115384	11039	indeno(1,2,3-ij)isoqinoline	42000	ug/kg
115384	11039	11h-benzo[a]fluorene	130000	ug/kg
115384	11039	11h-benzo[a]fluorene	94000	ug/kg
115384	11039	benzo[b]naphtho[1,2-d]thioph	43000	ug/kg
115384	11039	benzo[c]phenanthrene	110000	ug/kg
115384	11039	triphenylene, 2-methyl-	48000	ug/kg
115384	11039	benzo[j]fluoranthene	200000	ug/kg
115384	11039	benzo[j]fluoranthene	70000	ug/kg
115385	11039	anthracene, 1-methyl-	160	ug/kg
115385	11039	11h-benzo[a]fluorene	300	ug/kg
115385	11039	11h-benzo[a]fluorene	260	ug/kg
115385	11039	benzo[c]phenanthrene	200	ug/kg
115385	11039	benzo[e]pyrene	180	ug/kg
115385	11039	benzo[j]fluoranthene	510	ug/kg
115389	11041	dibenzothiophene	1900	ug/kg
115389	11041	anthracene, 1-methyl-	2000	ug/kg
115389	11041	benzo[b]naphtho[2,3-d]furan	2300	ug/kg
115389	11041	11h-benzo[a]fluorene	6100	ug/kg
115389	11041	11h-benzo[b]fluorene	5200	ug/kg
115389	11041	pyrene, 4-methyl-	2300	ug/kg
115389	11041	benzo[b]naphtho[2,1-d]thioph	3700	ug/kg
115389	11041	benzo[ghi]fluoranthene	3300	ug/kg
115389	11041	benzo[c]phenanthrene	5300	ug/kg
115389	11041	triphenylene, 2-methyl-	2000	ug/kg
115389	11041	benzo[j]fluoranthene	2700	ug/kg
115389	11041	benzo[j]fluoranthene	9900	ug/kg
115390	11041	pentacosane	140	ug/kg
115392	11040	ethanone, 1-oxiranyl-	250	ug/kg
115392	11040	cyclohexane, 1-(1,5-dimethyl	120	ug/kg
115392	11040	dotriacontane	210	ug/kg
115392	11040	dotriacontane	370	ug/kg
115392	11040	dotriacontane	360	ug/kg
115392	11040	dotriacontane	190	ug/kg
115392	11040	tritetracontane	290	ug/kg

TABLE C-7

TABLE C-7A

SOLID WASTE LANDFILL
CIS SUBSURFACE SOIL RADIOLOGICAL RESULTS
OPERABLE UNIT 2 REMEDIAL INVESTIGATION
FERNALD ENVIRONMENTAL MANAGEMENT PROJECT

FEMP ID #		PS49004			PS49020			PS49034		
Boring		49-01			49-02			49-03		
Depth		0-18'			0-12'			0-16'		
Date		04/29/87			04/29/87			04/30/87		
	Isotope	Activity (pCi/g)	Uncertainty	Validation Qualifier	Activity (pCi/g)	Uncertainity	Validation Qualifier	Activity (pCi/g)	Uncertainty	Validation Qualifier
	Cesium-137	0.25	NA[a]	U	0.33	NA	U	0.19	NA	U
	Neptunium-237	0.21	±0.06		0.14	±0.05		0.04	NA	U
	Plutonium-238	0.03	NA	U	0.04	NA	U	0.05	±0.02	J
	Plutonium-239/240	0.02	NA	U	0.03	NA	U	0.02	NA	U
	Ruthenium-106	2.00	NA	U	2.54	NA	U	1.60	NA	U
	Strontium-90	0.46	NA	U	0.39	NA	U	0.40	NA	U
	Technetium-99	248	±28.2		967	±113		1.30	NA	U
	Thorium-228	0.17	±0.08		0.21	±0.08	J	0.20	±0.11	J
	Thorium-230	0.10	±0.05	U	0.13	±0.10	U	0.10	±0.06	U
	Thorium-232	0.02	NA	U	0.05	NA	U	0.03	NA	U
	Uranium-234	9.33	±0.49	U	8.49	±0.44	U	27.9	±0.83	J
	Uranium-235	0.48	±0.11	U	0.41	±0.10	U	1.37	±0.19	J
	Uranium-238	16.5	±0.65	U	12.6	±0.53	U	34.8	±0.93	J

See footnote at end of table

FER\CRU2RI\TLC\APP-C\TABC-7A\January 5, 1995 6:04pm

000225

6508

TABLE C-7A
(Continued)

FEMP ID #	PS49048			PS49057			PS49073		
Boring	49-04			49-05			49-06		
Depth	0-8'			0-14'			0-18'		
Date	04/30/87			05/01/87			05/04/87		
Isotope	Activity (pCi/g)	Uncertainty	Validation Qualifier	Activity (pCi/g)	Uncertainity	Validation Qualifier	Activity (pCi/g)	Uncertainty	Validation Qualifier
Cesium-137	0.20	NA	U	0.31	NA	U	0.29	NA	U
Neptunium-237	0.10	NA	U	0.10	NA	U	0.11	±0.04	
Plutonium-238	0.03	NA	U	0.06	NA	U	0.07	NA	U
Plutonium-239/240	0.02	NA	U	0.02	NA	U	0.04	NA	U
Ruthenium-106	1.54	NA	U	2.46	NA	U	2.48	NA	U
Strontium-90	0.36	NA	U	0.35	NA	U	0.39	NA	U
Technetium-99	1.30	NA	U	1.40	NA	U	3.76	±0.58	
Thorium-228	0.23	±0.09	J	0.37	±0.14	J	0.26	±0.08	J
Thorium-230	0.06	NA	U	0.13	±0.07	U	0.17	±0.07	U
Thorium-232	0.08	NA	U	0.04	±0.03	J	0.06	NA	U
Uranium-234	4.94	±0.37	U	6.39	±0.41	U	8.42	±0.47	U
Uranium-235	0.36	±0.11	U	0.36	±0.10	U	0.61	±0.13	U
Uranium-238	11.9	±0.57	U	12.6	±0.57	U	30.2	±0.89	J

[a]Not applicable

TABLE C-7B

SOLID WASTE LANDFILL
CIS SUBSURFACE SOIL RESULTS
NON-RADIOLOGICAL DATA
OPERABLE UNIT 2 REMEDIAL INVESTIGATION
FERNALD ENVIRONMENTAL MANAGEMENT PROJECT

Analyte	Result	Validation Qualifier	Result	Validation Qualifier	Result	Validation Qualifier
	FEMP ID# PS-49-001 Boring 49-01		FEMP ID# PS-49-002 (Dup. of PS-49-001) Boring 49-01		FEMP ID# PS-49-018 Boring 49-02	
INORGANICS (mg/kg)						
Aluminum	17200	J	10300	J	10200	J
Antimony	0.3	UJ	0.3	UJ	0.3	J
Arsenic	0.9	J	0.4	UJ	3.3	J
Barium	124		37	U	115	-
Beryllium	[0.4]	U	0.4	U	0.4	J
Cadmium	2.5		1.9	-	2.9	J
Calcium	15700	J	88700	J	23200	J
Chromium	21	J	25	J	14	-
Cobalt	2.5		4.3	-	9.8	U
Copper	20	U	17	U	16	U
Cyanide	0.6	UJ	0.6	UJ	0.6	UJ
Iron	16500	J	17100	J	18100	J
Lead	19	UJ	9.3	UJ	13	UJ
Magnesium	7370	J	26500	J	8200	J
Manganese	248		427	J	436	J

FER\CRU2RI\BJS\TABC-7B\January 6, 1995 7:57am

0002227

6508

TABLE C-7B
(Continued)

Analyte	Result	Validation Qualifier	Result	Validation Qualifier	Result	Validation Qualifier
	FEMP ID# PS-49-001 Boring 49-01		FEMP ID# PS-49-002 (Dup. of PS-49-001) Boring 49-01		FEMP ID# PS-49-018 Boring 49-02	
INORGANICS (mg/kg) (Continued)						
Mercury	0.2		3.4	-	0.1	-
Nickel	13		14	-	22	U
Potassium	625		1220	-	492	J
Selenium	0.4	UJ	0.4	UJ	0.4	J
Silver	1.6	UJ	1.2	UJ	1.5	UJ
Sodium	72	U	356	-	69	U
Thallium	0.2	UJ	0.2	UJ	0.2	J
Vanadium	27	UJ	20	UJ	20	J
Zinc	64	J	52	J	61	UJ
	FEMP ID# PS-49-001 Boring 49-01		FEMP ID# PS-49-002 (Dup. of PS-49-001) Boring 49-01		FEMP ID# PS-49-018 Boring 49-02	
PCBs/PESTICIDES (μg/kg)						
4,4-Dde	39	U	18	U	20	U
Aldrin	19	U	9.1	U	10	U
Alpha-bhc	19	U	9.1	U	10	U
Aroclor-1016	190	U	91	U	100	U
Aroclor-1221	190	U	91	U	100	U

TABLE C-7B
(Continued)

Analyte	Result	Validation Qualifier	Result	Validation Qualifier	Result	Validation Qualifier
	FEMP ID# PS-49-001 Boring 49-01		FEMP ID# PS-49-002 (Dup. of PS-49-001) Boring 49-01		FEMP ID# PS-49-018 Boring 49-02	
PCBs/PESTICIDES (μg/kg) (Continued)						
Aroclor-1232	190	U	91	U	100	U
Aroclor-1242	190	U	91	U	260	U
Aroclor-1248	190	U	110	U	100	U
Aroclor-1254	390	U	180	U	200	U
Aroclor-1260	390	U	180	U	200	U
Beta-bhc	19	U	9.1	U	10	U
Chlordane	190	U	91	U	100	U
Delta-bhc	19	U	9.1	U	10	U
Dieldrin	39	U	18	U	20	U
Endosulfan I	19	U	9.1	U	10	U
Endosulfan II	39	U	18	U	20	U
Endosulfan sulfate	39	U	18	U	20	U
Endrin	39	U	18	U	20	U
Endrin ketone	39	U	18	U	20	U
Heptachlor	19	U	9.1	U	10	U

TABLE C-7B
(Continued)

Analyte	Result	Validation Qualifier	Result	Validation Qualifier	Result	Validation Qualifier
	FEMP ID# PS-49-001 Boring 49-01		FEMP ID# PS-49-002 (Dup. of PS-49-001) Boring 49-01		FEMP ID# PS-49-018 Boring 49-02	
PCBs/PESTICIDES (μg/kg) (Continued)						
Heptachlor epoxide	19	U	9.1	U	10	U
Methoxychlor	190	U	91	U	100	U
Toxaphene	390	U	180	U	200	U
	FEMP ID# PS-49-001 Boring 49-01		FEMP ID# PS-49-002 (Dup. of PS-49-001) Boring 49-01		FEMP ID# PS-49-018 Boring 49-02	
VOLATILE ORGANICS (μg/kg)						
1,1,1-Trichloroethane	200	U			210	U
1,1,2,2-Tetrachloroethane	200	U			210	U
1,1,2-Trichloroethane	200	U			210	U
1,1-Dichloroethane	200	U			210	U
1,1-Dichloroethene	200	U			210	U
1,2-Dichloroethane	200	U			210	U
1,2-Dichloropropane	200	U			210	U
1,2-Dichloropropene					ND	NV
1,3-Dichloropropene	200	U			210	U
2-Butanone	400	R			420	R
2-Chloroethyl vinyl ether	400	UJ			420	R

FER\CRU2RI\BJS\TABC-7B\January 6, 1995 7:57am

TABLE C-7B
(Continued)

Analyte	Result	Validation Qualifier	Result	Validation Qualifier	Result	Validation Qualifier
	FEMP ID# PS-49-001 Boring 49-01		FEMP ID# PS-49-002 (Dup. of PS-49-001) Boring 49-01		FEMP ID# PS-49-018 Boring 49-02	
VOLATILE ORGANICS (μg/kg) (Continued)						
2-Hexanone	400	UJ			420	UJ
4-Methyl-2-pentanone	400	U			420	U
Acetone	400	U			210	U
Acrolein	ND	R			ND	NV
Benzene	200	U			ND	NV
Bromodichloromethane	200	U			210	U
Bromoform	200	U			210	U
Bromomethane	400	UJ			210	U
Carbon disulfide	200	U			420	U
Carbon tetrachloride	200	U			210	U
Chlorobenzene	200	U			210	U
Chloroethane	400	UJ			210	U
Chloroform	200	U			420	UJ
Chloromethane	400	U			210	U
Dibromochloromethane	200	U			420	UJ
Ethylbenzene	200	U			210	U
Methylene chloride	320	U			160	U
Dichlorodifluoromethane					ND	NV

FER\CRU2RI\BJS\TABC-7B\January 6, 1995 7:57am

000234

TABLE C-7B
(Continued)

Analyte	Result	Validation Qualifier	Result	Validation Qualifier	Result	Validation Qualifier
	FEMP ID# PS-49-001 Boring 49-01		FEMP ID# PS-49-002 (Dup. of PS-49-001) Boring 49-01		FEMP ID# PS-49-018 Boring 49-02	
VOLATILE ORGANICS (μg/kg) (Continued)						
Ethylbenzene					210	U
Styrene	200	U			210	U
Tetrachloroethene	200	U			210	U
Toluene	200	U			210	U
Total xylene	200	U			210	U
Trans-1,2-dichloroethene	200	U			210	U
Trichloroethene	200	U			210	U
Vinyl acetate	400	U				
Vinyl chloride	400	U				
	FEMP ID# PS-49-001 Boring 49-01		FEMP ID# PS-49-002 (Dup. of PS-49-001) Boring 49-01		FEMP ID# PS-49-018 Boring 49-02	
SEMI-VOLATILE ORGANICS (μg/kg)						
1,2,4-Trichlorobenzene	450	U	420	U	460	U
1,2-Dichlorobenzene	450	U	420	U	460	U
1,3-Dichlorobenzene	450	U	420	U	460	U
1,4-Dichlorobenzene	450	U	420	U	460	U
2,4,5-Trichlorophenol	2300	U	2100	U	2300	U

TABLE C-7B
(Continued)

Analyte	Result	Validation Qualifier	Result	Validation Qualifier	Result	Validation Qualifier
	FEMP ID# PS-49-001 Boring 49-01		FEMP ID# PS-49-002 (Dup. of PS-49-001) Boring 49-01		FEMP ID# PS-49-018 Boring 49-02	
SEMI-VOLATILE ORGANICS (μg/kg) (Continued)						
2,4,6-Trichlorophenol	450	U	420	U	460	U
2,4-Dichlorophenol	450	U	420	U	460	U
2,4-Dimethylphenol	450	U	420	U	460	U
2,4-Dinitrophenol	2300	R	2100	R	2300	UJ
2,4-Dinitrotoluene	450	U	420	U	460	U
2,6-Dinitrotoluene			420	U	460	U
2-Chloronaphthalene	450	U	420	U	460	U
2-Chlorophenol	450	U	420	U	460	U
2-Methylnaphthalene	66	J	420	U	460	U
2-Methylphenol	450	U	420	U	460	U
2-Nitroaniline	2300	U	2100	U	2300	U
2-Nitrophenol	450	U	420	U	460	U
3,3-Dichlorobenzidine	900	U	840	U	920	U
3-Nitroaniline	2300	U	2100	U	2300	U
4,6-Dinitro-2-methylphenol	2300	UJ	2100	UJ	2300	UJ
4-Bromophenyl phenyl ether	450	U	420	U	460	U
4-Chloroaniline	450	U	420	U	460	U
4-Chloro-3-methylphenol	450	U	420	U	460	U

FER\CRU2RI\BJS\TABC-7B\January 6, 1995 7:57am

TABLE C-7B
(Continued)

Analyte	Result	Validation Qualifier	Result	Validation Qualifier	Result	Validation Qualifier
	FEMP ID# PS-49-001 Boring 49-01		FEMP ID# PS-49-002 (Dup. of PS-49-001) Boring 49-01		FEMP ID# PS-49-018 Boring 49-02	
SEMI-VOLATILE ORGANICS (μg/kg) (Continued)						
4-Methylphenol	450	U	420	U	460	U
4-Nitroaniline	2300	U	2100	U	2300	U
4-Nitrophenol	2300	U	2100	U	2300	U
Acenaphthene	1300	U	420	U	460	U
Acenaphthylene	450	U	420	U	460	U
Anthracene	2700	-	420	U	460	U
Benzoic acid	2300	UJ	2100	UJ		R
Benzo(a)anthracene	16000		420	U	130	J
Benzo(a)pyrene	7000	-	420	U	100	J
Benzo(b)fluoranthene	6700	-	420	U	98	J
Benzo(g,h,i)perylene	6000	-	420	U	460	U
Benzo(k)fluoranthene	4000	-	420	U	84	J
Benzyl alcohol	450	U	420	U	460	U
Bis(2-chloroethoxy)methane	450	U	420	U	460	U
Bis(2-chloroethyl)ether	450	U	420	U	460	U
Bis(2-chloroisopropyl)ether	450	U	420	U	460	U
Bis(2-ethylhexyl)phthalate	550	J	120	J	460	UJ
Bis(chloromethyl)ether					ND	NV

TABLE C-7B
(Continued)

Analyte	Result	Validation Qualifier	Result	Validation Qualifier	Result	Validation Qualifier
	FEMP ID# PS-49-001 Boring 49-01		FEMP ID# PS-49-002 (Dup. of PS-49-001) Boring 49-01		FEMP ID# PS-49-018 Boring 49-02	
SEMI-VOLATILE ORGANICS (μg/kg) (Continued)						
Butyl benzyl phthalate	450	UJ	420	UJ	460	UJ
Chrysene	18000		420	U	460	U
Dibenzofuran	620	-	420	U	460	U
Dibenzo(a,h)anthracene	2100	J	420	UJ	460	U
Diethyl phthalate	450	U	420	U	460	U
Dimethyl phthalate	450	U	420	U	460	U
Di-n-butylphthalate	55	U	420	U	460	U
Di-n-octylphthalate	350	J	92	J	460	U
Fluoranthene	32000	-	59	J	330	J
Fluorene	1400		420	U	460	U
Hexachlorobenzene	450	U	420	U	460	U
Hexachlorobutadiene	450	U	420	U	460	U
Hexachlorocyclopentadiene	450	UJ	420	UJ	460	UJ
Hexachloroethane	450	U	420	U	460	U
Indeno(1,2,3-cd)pyrene	5700	-	420	U	460	U
Isophorone	450	U	420	U	460	U
Naphthalene	450	U	420	U	460	U
Nitrobenzene	450	U	420	U	460	U

TABLE C-7B
(Continued)

Analyte	Result	Validation Qualifier	Result	Validation Qualifier	Result	Validation Qualifier
	FEMP ID# PS-49-001 Boring 49-01		FEMP ID# PS-49-002 (Dup. of PS-49-001) Boring 49-01		FEMP ID# PS-49-018 Boring 49-02	
SEMI-VOLATILE ORGANICS (μg/kg) (Continued)						
N-nitrosodiphenylamine	450	U	420	U	460	U
N-nitroso-di-n-propylamine	450	U	420	U	460	U
Pentachlorophenol	2300	U	2100	U	2300	U
Phenanthrene	38000	-	420	U	320	J
Phenol	450	U	420	U	460	U
Pyrene	31000	J	43	J	240	J
	FEMP ID# PS-49-032 Boring 49-03		FEMP ID# PS-49-046 Boring 49-04		FEMP ID# PS-49-055 Boring 49-05	
INORGANICS (mg/kg)						
Aluminum	9670	J	6370	J	10100	J
Antimony	2.1	J	0.6	J	0.3	J
Arsenic	5.8	J	6.7	J	4.8	J
Barium	82	-	31	J	68	-
Beryllium	0.4	J	0.2	U	0.4	J
Cadmium	2.9	J	0.4	UJ	3.0	J
Calcium	67600	J	78400	J	67600	J
Chromium	21	-	9.2	-	14	
Cobalt	9.2	U	5.4	U	8.3	U

FEP\GRU2RI\BJS\TABC-7B\January 6, 1995 7:57am

000235

TABLE C-7B
(Continued)

Analyte	Result	Validation Qualifier	Result	Validation Qualifier	Result	Validation Qualifier
	FEMP ID# PS-49-032 Boring 49-03		FEMP ID# PS-49-046 Boring 49-04		FEMP ID# PS-49-055 Boring 49-05	
INORGANICS (mg/kg) (Continued)						
Copper	13	U	11	U	30	U
Cyanide	0.6	UJ	0.6	UJ	0.6	J
Iron	15600	J	13500	J	17300	J
Lead	16	UJ	14	UJ	13	UJ
Magnesium	22000	J	25700	J	19800	J
Manganese	716	J	338	J	559	J
Mercury	0.2	-	0.1	U	0.1	U
Nickel	42	-	13	U	19	U
Potassium	811	J	654	J	725	J
Selenium	0.3	U	0.4	U	0.4	U
Silver	1.5	UJ	1.3	UJ	1.4	UJ
Sodium	180	J	77	J	64	J
Thallium	0.2	J	0.6	UJ	0.5	J
Vanadium	13	J	12	J	18	J
Zinc	167	U	40	UJ	56	UJ

TABLE C-7B
(Continued)

Analyte	Result	Validation Qualifier	Result	Validation Qualifier	Result	Validation Qualifier
	FEMP ID# PS-49-032 Boring 49-03		FEMP ID# PS-49-046 Boring 49-04		FEMP ID# PS-49-055 Boring 49-05	
PCBs/PESTICIDES (µg/kg)						
4,4-Dde	380	U	19	U	20	U
Aldrin	190	U	10	U	10	U
Alpha-bhc	190	U	10	U	10	U
Aroclor 1016	1900	U	95	U	98	U
Aroclor 1221	1900	U	95	U	98	U
Aroclor 1232	1900	U	95	U	98	U
Aroclor 1242	1600	J	110	U	130	-
Aroclor 1248	1900	U	95	U	98	U
Aroclor 1254	3800	U	190	U	200	U
Aroclor 1260	3800	U	190	U	200	U
Beta-bhc	190	U	10	U	10	U
Chlordane	1900	U	95	U	98	U
Delta-bhc	190	U	10	U	10	U
Dieldrin	380	U	19	U	20	U
Endosulfan I	190	U	10	U	10	U
Endosulfan II	380	U	19	U	20	U
Endosulfan sulfate	380	U	19	U	20	U
Endrin	380	U	19	U	20	U
Endrin ketone	380	U	19	U	20	U

TABLE C-7B
(Continued)

Analyte	Result	Validation Qualifier	Result	Validation Qualifier	Result	Validation Qualifier
	FEMP ID# PS-49-032 Boring 49-03		FEMP ID# PS-49-046 Boring 49-04		FEMP ID# PS-49-055 Boring 49-05	
PCBs/PESTICIDES (μg/kg) (Continued)						
Heptachlor	190	U	10	U	10	U
Heptachlor epoxide	190	U	10	U	10	U
Methoxychlor	1900	U	95	U	98	U
Toxaphene	3800	U	190	U	200	U
	FEMP ID# PS-49-032 Boring 49-03		FEMP ID# PS-49-046 Boring 49-04		FEMP ID# PS-49-055 Boring 49-05	
VOLATILE ORGANICS (μg/kg)						
1,1,1-Trichloroethane	200	U	200	U	200	U
1,1,2,2-Tetrachloroethane	200	U	200	U	200	U
1,1,2-Trichloroethane	200	U	200	U	200	U
1,1-Dichloroethane	200	U	200	U	200	U
1,1-Dichloroethene	200	U	200	U	200	U
1,2-Dichloroethane	200	U	200	U	200	U
1,2-Dichloropropane	200	U	200	U	200	U
1,3-Dichloropropene	200	U	200	U	200	U
2-Butanone	390	R	390	R	400	R
2-Chloroethyl vinyl ether	390	R	390	R	400	R
2-Hexanone	390	UJ	390	UJ	400	UJ

TABLE C-7B
(Continued)

Analyte	Result	Validation Qualifier	Result	Validation Qualifier	Result	Validation Qualifier
	FEMP ID# PS-49-032 Boring 49-03		FEMP ID# PS-49-046 Boring 49-04		FEMP ID# PS-49-055 Boring 49-5	
VOLATILE ORGANICS (μg/kg) (Continued)						
4-Methyl-2-pentanone	390	U	390	U	400	U
Acetone	390	U	390	U	400	U
Acrolein	ND	R	ND	R	ND	R
Acrylonitrile	ND	NV	ND	R	ND	R
Benzene	200	U	200	U	200	U
Bromodichloromethane	200	U	200	U	200	U
Bromoform	200	U	200	U	200	U
Bromomethane	390	U	390	U	400	U
Carbon disulfide	200	U	200	U	200	U
Carbon tetrachloride	200	U	200	U	200	U
Chlorobenzene	200	U	200	U	200	U
Chloroethane	390	UJ	390	U	400	U
Chloroform	200	U	200	U	200	U
Chloromethane	390	UJ	390	UJ	400	UJ
Dibromochloromethane	200	U	200	U	200	U
Dichlorodifluoromethane	ND	NV	ND	R	ND	R
Ethylbenzene	91	J	200	U	200	U
Methylene chloride	200	U	200	U	200	U

TABLE C-7B
(Continued)

Analyte	Result	Validation Qualifier	Result	Validation Qualifier	Result	Validation Qualifier
	FEMP ID# PS-49-032 Boring 49-03		FEMP ID# PS-49-046 Boring 49-04		FEMP ID# PS-49-055 Boring 49-05	
VOLATILE ORGANICS (μg/kg) (Continued)						
Styrene	200	U	200	U	200	U
Tetrachloroethene	97	J	200	U	200	U
Toluene	180	J	200	U	200	U
Total xylene	320	-	200	U	200	U
Trans-1,2-dichloroethene	200	U	200	U	200	U
Trichloroethene	200	U	200	U	200	U
Trichlorofluoromethane	17	R				
Vinyl acetate	390	U	390	U	400	U
Vinyl chloride	390	U	390	U	400	U
	FEMP ID# PS-49-032 Boring 49-03		FEMP ID# PS-49-046 Boring 49-04		FEMP ID# PS-49-055 Boring 49-05	
SEMI-VOLATILE ORGANICS (μg/kg)						
1,2,4-Trichlorobenzene	4300	U	440	U	450	U
1,2-Dichlorobenzene	4300	U	440	U	450	U
1,3-Dichlorobenzene	4300	U	440	U	450	U
1,4-Dichlorobenzene	4300	U	440	U	450	U
2,4,5-Trichlorophenol	22000	U	2200	U	2300	U
2,4,6-Trichlorophenol	4300	U	440	U	450	U

TABLE C-7B
(Continued)

Analyte	Result	Validation Qualifier	Result	Validation Qualifier	Result	Validation Qualifier
	FEMP ID# PS-49-032 Boring 49-03		FEMP ID# PS-49-046 Boring 49-04		FEMP ID# PS-49-055 Boring 49-05	
SEMI-VOLATILE ORGANICS (μg/kg) (Continued)						
2,4-Dichlorophenol	4300	U	440	U	450	U
2,4-Dimethylphenol	4300	U	440	U	450	U
2,4-Dinitrophenol	22000	U	2200	R	2300	U
2,4-Dinitrotoluene	4300	UJ	440	U	450	U
2,6-Dinitrotoluene	4300	UJ	440	U	450	U
2-Chloronaphthalene	4300	U	440	U	450	U
2-Chlorophenol	4300	U	440	U	450	U
2-Methylnaphthalene	11000	-	440	U	450	U
2-Methylphenol	4300	U	440	U	450	U
2-Nitroaniline	22000	U	2200	U	2300	U
2-Nitrophenol	4300	U	440	U	450	U
3,3-Dichlorobenzidine	8600	U	880	U	900	U
3-Nitroaniline	22000	U	2200	U	2300	U
4,6-Dinitro-2-methylphenol	1700	J	2200	UJ	2300	U
4-Bromophenyl phenyl ether	4300	U	440	U	450	U
4-Chloroaniline	4300	U	440	U	450	U
4-Chloro-3-methylphenol	4300	U	440	U	450	U
4-Methylphenol	4300	U	440	U	450	U

TABLE C-7B
(Continued)

Analyte	Result	Validation Qualifier	Result	Validation Qualifier	Result	Validation Qualifier
	FEMP ID# PS-49-032 Boring 49-03		FEMP ID# PS-49-046 Boring 49-04		FEMP ID# PS-49-055 Boring 49-05	
SEMI-VOLATILE ORGANICS (μg/kg) (Continued)						
4-Nitroaniline	22000	U	2200	U	2300	U
4-Nitrophenol	22000	U	2200	UJ	2300	U
Acenaphthene	4300	U	440	U	450	U
Acenaphthylene	4300	U	440	U	450	U
Anthracene	28000	-	440	U	85	J
Benzoic acid	22000	R	2200	UJ	2300	R
Benzo(a)anthracene	51000	J	440	U	150	J
Benzo(a)pyrene	48000	-	440	U	120	J
Benzo(b)fluoranthene	4300	U	440	U	120	J
Benzo(g,h,i)perylene	43000	-	440	U	110	J
Benzo(k)fluoranthene	49000	J	440	U	110	J
Benzyl alcohol	4300	U	440	U	450	U
Bis(2-chloroethoxy)methane	4300	UJ	440	U	450	U
Bis(2-chloroethyl)ether	4300	UJ	440	U	450	U
Bis(2-chloroisopropyl)ether	4300	UJ	440	U	450	U
Bis(2-ethylhexyl)phthalate	4300	UJ	440	U	150	J
Bis(chloromethyl)ether	ND	NV	ND	R	ND	R
Butyl benzyl phthalate	4300	UJ	440	UJ	450	U

FER\CRU2RI\BJS\TABC-7B\January 6, 1995 7:57am

TABLE C-7B
(Continued)

Analyte	Result	Validation Qualifier	Result	Validation Qualifier	Result	Validation Qualifier
	FEMP ID# PS-49-032 Boring 49-03		FEMP ID# PS-49-046 Boring 49-04		FEMP ID# PS-49-055 Boring 49-05	
Chrysene	46000	-	440	U	170	J
Dibenzofuran	22000	U	440	U	450	U
Dibenzo(a,h)anthracene	11000	-	440	UJ	450	U
Diethyl phthalate	4300	UJ	440	U	450	U
Dimethyl phthalate	4300	U	440	U	450	U
Di-n-butylphthalate	4300	U	440	U	450	U
Di-n-octylphthalate	4300	U	440	U	300	J
Fluoranthene	260000	-	440	U	450	J
Fluorene	25000	-	440	U	450	U
Hexachlorobenzene	4300	U	440	U	450	U
Hexachlorobutadiene	4300	J	440	U	450	U
Hexachlorocyclopentadiene	4300	U	440	UJ	450	U
Hexachloroethane	4300	U	440	U	450	U
Indeno(1,2,3-cd)pyrene	31000	-	440	U	81	J
Isophorone	4300	U	440	U	450	U
Naphthalene	19000	-	440	U	450	U
Nitrobenzene	4300	UJ	440	U	450	U
N-nitrosodiphenylamine	4300	U	440	U	450	U

000344

TABLE C-7B
(Continued)

Analyte	Result	Validation Qualifier	Result	Validation Qualifier	Result	Validation Qualifier
	FEMP ID# PS-49-032 Boring 49-03		FEMP ID# PS-49-046 Boring 49-04		FEMP ID# PS-49-055 Boring 49-05	
SEMI-VOLATILE ORGANICS (μg/kg) (Continued)						
N-nitroso-di-n-propylamine	4300	U	440	U	67	J
Pentachlorophenol	22000	U	2200	U	2300	U
Phenanthrene	260000	-	440	U	330	J
Phenol	4300	U	440	U	450	U
Pyrene	63000	J	440	UJ	300	J
	FEMP ID# PS-49-061 (Dup. of PS-49-055) Boring 49-05		FEMP ID# PS-49-071 Boring 49-06			
INORGANICS (mg/kg)						
Aluminum			9490			
Antimony			0.3	R		
Arsenic			5.3	J		
Barium			69			
Beryllium			0.2	J		
Cadmium			5.3			
Calcium			130000			
Chromium			19			
Cobalt			8.3	J		

TABLE C-7B
(Continued)

Analyte	Result	Validation Qualifier	Result	Validation Qualifier	Result	Validation Qualifier
	FEMP ID# PS-49-061 (Dup. of PS-49-055) Boring 49-05		FEMP ID# PS-49-071 Boring 49-06			
INORGANICS (mg/kg) (Continued)						
Copper			12			
Cyanide			0.6	J		
Iron			21800			
Lead			10			
Magnesium			30100			
Manganese			668			
Mercury			0.1	U		
Nickel			18			
Potassium			1970			
Selenium			0.3	U		
Silver			1.6	J		
Sodium			162	J		
Thallium			0.2	J		
Vanadium			20			
Zinc			50	J		

TABLE C-7B
(Continued)

Analyte	Result	Validation Qualifier	Result	Validation Qualifier	Result	Validation Qualifier
	FEMP ID# PS-49-061 (Dup. of PS-49-055) Boring 49-05		FEMP ID# PS-49-071 Boring 49-06			
PCBs/PESTICIDES (μg/kg)						
4,4-Dde	98	U	20	U		
Aldrin	49	U	9.8	U		
Alpha-bhc	49	U	9.8	U		
Aroclor 1016	490	U	98	U		
Aroclor 1221	490	U	98	U		
Aroclor 1232	490	U	98	U		
Aroclor 1242	490	U	78	U		
Aroclor 1248	565		98	U		
Aroclor 1254	719	J	200	U		
Aroclor 1260	980	U	200	U		
Beta-bhc	49	U	9.8	U		
Chlordane	490	U	98	U		
Delta-bhc	49	U	9.8	U		
Dieldrin	98	U	20	U		
Endosulfan i	49	U	9.8	U		
Endosulfan ii	98	U	20	U		
Endosulfan sulfate	98	U	20	U		
Endrin	98	U	20	U		
Endrin ketone	98	U	20	U		

FER\CRU2RI\BJS\TABC-7B\January 6, 1995 7:57am

000237

TABLE C-7B
(Continued)

Analyte	Result	Validation Qualifier	Result	Validation Qualifier	Result	Validation Qualifier
	FEMP ID# PS-49-061 (Dup. of PS-49-055) Boring 49-05		FEMP ID# PS-49-071 Boring 49-06			
PCBs/PESTICIDES (μg/kg) (Continued)						
Heptachlor	49	U	9.8	U		
Heptachlor epoxide	49	U	9.8	U		
Methoxychlor	490	U	98	U		
Toxaphene	980	U	200	U		
	FEMP ID# PS-49-061 (Dup. of PS-49-055) Boring 49-05		FEMP ID# PS-49-071 Boring 49-06			
VOLATILE ORGANICS (μg/kg)						
1,1,1-Trichloroethane			200	J		
1,1,2,2-Tetrachloroethane			200	U		
1,1,2-Trichloroethane			200	U		
1,1-Dichloroethane			200	U		
1,1-Dichloroethene			200	U		
1,2-Dichloroethane			200	U		
1,2-Dichloropropane			200	U		
1,3-Dichloropropene			200	U		
2-Chloroethyl vinyl ether			400	U		
2-Hexanone			400	U		

6508

TABLE C-7B
(Continued)

Analyte	Result	Validation Qualifier	Result	Validation Qualifier	Result	Validation Qualifier
	FEMP ID# PS-49-061 (Dup. of PS-49-055) Boring 49-05		FEMP ID# PS-49-071 Boring 49-06			
VOLATILE ORGANICS (μg/kg) (Continued)						
4-Methyl-2-pentanone			400	U		
Acetone			400	U		
Acrolein			ND	R		
Acrylonitrile			ND	R		
Benzene			200	U		
Bromodichloromethane			200	U		
Bromoform			200	J		
Bromomethane			400	UJ		
Carbon disulfide			200	U		
Carbon tetrachloride			200	J		
Chlorobenzene			200	U		
Chloroethane			400	UJ		
Chloroform			200	U		
Chloromethane			400	U		
Dibromochloromethane			200	U		
Dichlorodifluoromethane			ND	R		
Ethylbenzene			200	U		
Methylene chloride			200	UJ		

FER\CRU2RI\BJS\TABC-7B\January 6, 1995 7:57am

000249

TABLE C-7B
(Continued)

Analyte	Result	Validation Qualifier	Result	Validation Qualifier	Result	Validation Qualifier
	FEMP ID# PS-49-061 (Dup. of PS-49-055) Boring 49-05		FEMP ID# PS-49-071 Boring 49-06			
VOLATILE ORGANICS (μg/kg) (Continued)						
Styrene			200	U		
Tetrachloroethene			200	U		
Toluene			200	U		
Total xylene			200	U		
Trans-1,2-dichloroethene			200	U		
Trichloroethene			200	U		
Vinyl acetate			400	U		
Vinyl chloride			400	U		
	FEMP ID# PS-49-061 (Dup. of PS-49-055) Boring 49-05		FEMP ID# PS-49-071 Boring 49-06			
SEMI-VOLATILE ORGANICS (μg/kg)						
1,2,4-Trichlorobenzene	450	UJ	460	UJ		
1,2-Dichlorobenzene	450	UJ	460	UJ		
1,3-Dichlorobenzene	450	UJ	460	UJ		
1,4-Dichlorobenzene	450	UJ	460	UJ		
2,4,5-Trichlorophenol	2300	UJ	2300	UJ		
2,4,6-Trichlorophenol	450	UJ	460	UJ		

TABLE C-7B
(Continued)

Analyte	Result	Validation Qualifier	Result	Validation Qualifier	Result	Validation Qualifier
	FEMP ID# PS-49-061 (Dup. of PS-49-055) Boring 49-05		FEMP ID# PS-49-071 Boring 49-06			
SEMI-VOLATILE ORGANICS (μg/kg) (Continued)						
2,4-Dichlorophenol	450	UJ	460	UJ		
2,4-Dimethylphenol	240	J	460	UJ		
2,4-Dinitrophenol	2300	UJ	2300	UJ		
2,4-Dinitrotoluene	450	UJ	460	UJ		
2,6-Dinitrotoluene	450	UJ	460	UJ		
2-Butanone			120	J		
2-Chloronaphthalene	450	UJ	460	UJ		
2-Chlorophenol	450	UJ	460	UJ		
2-Methylnaphthalene	1100	J	460	UJ		
2-Methylphenol	96	J	460	UJ		
2-Nitroaniline	2300	UJ	2300	UJ		
2-Nitrophenol	450	UJ	460	UJ		
3,3-Dichlorobenzidine	900	UJ	920	UJ		
3-Nitroaniline	2300	UJ	2300	UJ		
4,6-Dinitro-2-methylphenol	2300	UJ	2300	UJ		
4-Bromophenyl phenyl ether	450	UJ	460	UJ		
4-Chloroaniline	450	UJ	460	UJ		
4-Chloro-3-methylphenol	450	UJ	460	UJ		

TABLE C-7B
(Continued)

Analyte	Result	Validation Qualifier	Result	Validation Qualifier	Result	Validation Qualifier
	FEMP ID# PS-49-061 (Dup. of PS-49-055) Boring 49-05		FEMP ID# PS-49-071 Boring 49-06			
SEMIVOLATILE ORGANICS (μg/kg) (Continued)						
4-Methylphenol	360	J	460	UJ		
4-Nitroaniline	2300	UJ	2300	UJ		
4-Nitrophenol	2300	UJ	2300	UJ		
Acenaphthene	450	J	460	UJ		
Acenaphthylene	1900	J	460	UJ		
Anthracene	3300	J	460	UJ		
Benzoic acid	2300	R	2300	R		
Benzo(a)anthracene	4100	J	460	UJ		
Benzo(a)pyrene	4800	J	460	UJ		
Benzo(b)fluoranthene	5800	J	460	UJ		
Benzo(g,h,i)perylene	1300	J	460	UJ		
Benzo(k)fluoranthene	3700	J	460	UJ		
Benzyl alcohol	450	UJ	460	UJ		
Bis(2-chloroethoxy)methane	450	UJ	460	UJ		
Bis(2-chloroethyl)ether	450	UJ	460	UJ		
Bis(2-chloroisopropyl)ether	450	UJ	460	UJ		
Bis(2-ethylhexyl)phthalate	450	UJ	49	J		
Bis(chloromethyl)ether			ND	R		

TABLE C-7B
(Continued)

Analyte	Result	Validation Qualifier	Result	Validation Qualifier	Result	Validation Qualifier
	FEMP ID# PS-49-061 (Dup. of PS-49-055) Boring 49-05		FEMP ID# PS-49-071 Boring 49-06			
SEMI-VOLATILE ORGANICS (μg/kg) (Continued)						
Butyl benzyl phthalate	450	UJ	460	UJ		
Chrysene	4100	J	460	UJ		
Dibenzofuran	1700	J	460	UJ		
Dibenzo(a,h)anthracene	560	J	460	UJ		
Diethyl phthalate	450	UJ	460	UJ		
Dimethyl phthalate	450	UJ	460	UJ		
Di-n-butylphthalate	330	J	50	J		
Di-n-octylphthalate	450	UJ	460	UJ		
Fluoranthene	18000	J	460	UJ		
Fluorene	3400	J	460	UJ		
Hexachlorobenzene	450	UJ	460	UJ		
Hexachlorobutadiene	450	UJ	460	UJ		
Hexachlorocyclopentadiene	450	UJ	460	UJ		
Hexachloroethane	450	UJ	460	UJ		
Indeno(1,2,3-cd)pyrene	1400	J	460	UJ		
Isophorone	450	UJ	460	UJ		
Naphthalene	2700	J	460	UJ		
Nitrobenzene	450	UJ	460	UJ		

FER\CRU2RI\BJS\TABC-7B\January 6, 1995 7:57am

000253

6508

TABLE C-7B
(Continued)

Analyte	Result	Validation Qualifier	Result	Validation Qualifier	Result	Validation Qualifier
	FEMP ID# PS-49-061 (Dup. of PS-49-055) Boring 49-05		FEMP ID# PS-49-071 Boring 49-06			
SEMI-VOLATILE ORGANICS (μg/kg) (Continued)						
N-nitrosodiphenylamine	450	UJ	460	UJ		
N-nitroso-di-n-propylamine	450	UJ	460	UJ		
Pentachlorophenol	2300	UJ	2300	UJ		
Phenanthrene	16000	J	460	UJ		
Phenol	310	J	460	UJ		
Pyrene	4100	J	460	UJ		

000254

TABLE C-8

TABLE C-8

SOLID WASTE LANDFILL
SUBSURFACE MEDIA ANALYSIS ENVIRONMENTAL SURVEY
OPERABLE UNIT 2 REMEDIAL INVESTIGATION
FERNALD ENVIRONMENTAL MANAGEMENT PROJECT

Analyte	1015IS1B Depth 3.5 ft.	1015IS2B Depth 6.5 ft.
RADIONUCLIDES		
Bismuth-214	0.78±0.05	0.93±0.06
Cesium-137	0.14±0.02	I
Radium-226	0.79±0.04	0.9±0.04
Thorium-228	0.97±0.07	0.97±0.06
Thorium-232	0.72±0.09	0.94±0.08
Uranium-235	0.72±0.01	0.41±0.01
Uranium-238	99±5	64±4
Total Uranium (mg/kg)	228.0	250.0
TCLP METALS (mg/L)		
Arsenic	<0.5	<0.5
Barium	0.54(B)	0.86(B)
Cadmium	<0.02	<0.02
Chromium	<0.03	<0.03
Lead	<0.3	<0.3
Mercury	<0.001	<0.001
Selenium	<0.5	<0.5
Silver	<0.1	<0.1

I = Nuclide identified by GAMANAL analysis of sample spectrum, but values did not exceed room background at the 95% confidence level; no value reported.

TABLE C-9

TABLE C-9

SOLID WASTE LANDFILL
RI/FS SEDIMENT RESULTS
OPERABLE UNIT 2 REMEDIAL INVESTIGATION
FERNALD ENVIRONMENTAL MANAGEMENT PROJECT

PHASE I - RADIOLOGICAL PARAMETERS

BORING NUMBER	ASIT-021		
SAMPLE NUMBER	009100		
SAMPLING DATE	07/11/88		
RADIOLOGICAL PARAMETERS	RESULTS	UNITS	VQ
GROSS ALPHA	15.000	pci/g	NV
GROSS BETA	78.000	pci/g	NV
RA-226	0.800	pci/g	J
RA-228	1.000	pci/g	J
U-TOTAL	24.000	mg/kg	J

000256

6508

TABLE C-9
(Continued)

PHASE II - RADIOLOGICAL PARAMETERS

BORING NUMBER	SWL-SD-01			SWL-SD-02		
SAMPLE NUMBER	111328			111325		
SAMPLING DATE	04/08/93			04/06/93		
RADIOLOGICAL PARAMETERS	RESULTS	UNITS	VQ	RESULTS	UNITS	VQ
CS-137	0.100	pci/g	UJ	0.100	pci/g	UJ
GROSS ALPHA	27.700	pci/g	-	15.300	pci/g	-
GROSS BETA	26.900	pci/g	-	16.300	pci/g	-
NP-237	0.620	pci/g	N	0.040	pci/g	UJ
PU-238	0.036	pci/g	J	0.050	pci/g	UJ
PU-239/240	0.039	pci/g	J	0.040	pci/g	UJ
RA-226	0.970	pci/g	-	0.900	pci/g	-
RA-228	0.750	pci/g	J	1.070	pci/g	-
RU-106	0.720	pci/g	UJ	0.730	pci/g	UJ
SR-90	0.990	pci/g	J	0.590	pci/g	-
TC-99	0.410	pci/g	UJ	0.370	pci/g	UJ
TH-228	0.730	pci/g	-	0.920	pci/g	R
TH-230	1.050	pci/g	-	1.170	pci/g	R
TH-232	0.570	pci/g	J	1.000	pci/g	R
TH-TOTAL	5.200	ug/g	-	9.140	ug/g	R
U-234	3.660	pci/g	-	4.180	pci/g	J
U-235/236	0.250	pci/g	J	0.030	pci/g	UJ
U-238	4.560	pci/g	-	6.800	pci/g	-
U-TOTAL	14.700	mg/kg	-	22.600	mg/kg	-

000257

TABLE C-9
(Continued)

PHASE II - CHEMICAL PARAMETERS

BORING NUMBER	SWL-SD-02				SWL-SD-01			
SAMPLE NUMBER	111325				111328			
SAMPLING DATE	04/06/93				04/08/93			
CHEMICAL PARAMETERS	RESULTS	UNITS	L	VQ	RESULTS	UNITS	L	VQ
Inorganics								
Aluminum	8380.000	mg/kg	D	-	7010.000	mg/kg	C	-
Antimony	1.500	mg/kg	D	UJ	1.100	mg/kg	C	UJ
Arsenic	5.300	mg/kg	D	J	4.500	mg/kg	C	J
Barium	55.900	mg/kg	D	-	62.500	mg/kg	C	-
Beryllium	0.590	mg/kg	D	U	2.300	mg/kg	C	U
Cadmium	1.500	mg/kg	D	U	5.600	mg/kg	C	U
Calcium	105000.000	mg/kg	D	-	161000.000	mg/kg	C	-
Chromium	11.500	mg/kg	D	-	11.300	mg/kg	C	U
Cobalt	6.400	mg/kg	D	-	11.300	mg/kg	C	U
Copper	15.300	mg/kg	D	-	11.900	mg/kg	C	-
Cyanide	0.150	mg/kg	D	U	0.130	mg/kg	C	U
Iron	15400.000	mg/kg	D	-	13400.000	mg/kg	C	-
Lead	14.100	mg/kg	D	J	11.400	mg/kg	C	J
Magnesium	22500.000	mg/kg	D	-	26000.000	mg/kg	C	-
Manganese	424.000	mg/kg	D	J	1640.000	mg/kg	C	J
Mercury	0.080	mg/kg	D	U	0.100	mg/kg	C	U
Molybdenum	5.900	mg/kg	D	U	22.600	mg/kg	C	U
Nickel	16.400	mg/kg	D	-	22.600	mg/kg	C	U
Potassium	1100.000	mg/kg	D	-	1030.000	mg/kg	C	-
Selenium	0.590	mg/kg	D	U	0.520	mg/kg	C	U
Silicon	1280.000	mg/kg	D	J	1330.000	mg/kg	C	J
Silver	4.200	mg/kg	D	-	11.300	mg/kg	C	U
Sodium	158.000	mg/kg	D	-	346.000	mg/kg	C	-
Thallium	0.590	mg/kg	D	U	0.760	mg/kg	C	J
Vanadium	23.800	mg/kg	D	-	19.000	mg/kg	C	-
Zinc	45.700	mg/kg	D	-	72.600	mg/kg	C	-
Volatile Organics								
1,1,1-Trichloroethane	15.000	ug/kg	D	U	13.000	ug/kg	C	U
1,1,2,2-Tetrachloroethane	15.000	ug/kg	D	U	13.000	ug/kg	C	U
1,1,2-Trichloroethane	15.000	ug/kg	D	U	13.000	ug/kg	C	U
1,1-Dichloroethane	15.000	ug/kg	D	U	13.000	ug/kg	C	U
1,1-Dichloroethene	15.000	ug/kg	D	U	13.000	ug/kg	C	U
1,2-Dichloroethane	15.000	ug/kg	D	U	13.000	ug/kg	C	U
1,2-Dichloroethene	15.000	ug/kg	D	U	13.000	ug/kg	C	U
1,2-Dichloropropane	15.000	ug/kg	D	U	13.000	ug/kg	C	U
2-Butanone	15.000	ug/kg	D	UJ	13.000	ug/kg	C	U
2-Hexanone	15.000	ug/kg	D	UJ	13.000	ug/kg	C	U
4-Methyl-2-pentanone	15.000	ug/kg	D	UJ	13.000	ug/kg	C	U
Acetone	2.000	ug/kg	D	J	13.000	ug/kg	C	U
Benzene	15.000	ug/kg	D	U	13.000	ug/kg	C	U

000258

TABLE C-9
(Continued)

PHASE II - CHEMICAL PARAMETERS

BORING NUMBER	SWL-SD-02				SWL-SD-01			
SAMPLE NUMBER	111325				111328			
SAMPLING DATE	04/06/93				04/08/93			
CHEMICAL PARAMETERS	RESULTS	UNITS	L	VQ	RESULTS	UNITS	L	VQ
Volatile Organics								
Bromodichloromethane	15.000	ug/kg	D	U	13.000	ug/kg	C	U
Bromoform	15.000	ug/kg	D	U	13.000	ug/kg	C	U
Bromomethane	15.000	ug/kg	D	UJ	13.000	ug/kg	C	U
Carbon Tetrachloride	15.000	ug/kg	D	U	13.000	ug/kg	C	U
Carbon disulfide	15.000	ug/kg	D	U	13.000	ug/kg	C	U
Chlorobenzene	15.000	ug/kg	D	U	13.000	ug/kg	C	U
Chloroethane	15.000	ug/kg	D	U	13.000	ug/kg	C	U
Chloroform	15.000	ug/kg	D	U	13.000	ug/kg	C	U
Chloromethane	15.000	ug/kg	D	U	13.000	ug/kg	C	U
Dibromochloromethane	15.000	ug/kg	D	U	13.000	ug/kg	C	U
Ethylbenzene	15.000	ug/kg	D	U	13.000	ug/kg	C	U
Methylene chloride	15.000	ug/kg	D	U	13.000	ug/kg	C	U
Styrene	15.000	ug/kg	D	U	13.000	ug/kg	C	U
Tetrachloroethene	15.000	ug/kg	D	U	13.000	ug/kg	C	U
Toluene	15.000	ug/kg	D	U	13.000	ug/kg	C	U
Trichloroethene	15.000	ug/kg	D	U	13.000	ug/kg	C	U
Vinyl Acetate	15.000	ug/kg	D	U	13.000	ug/kg	C	U
Vinyl chloride	15.000	ug/kg	D	UJ	13.000	ug/kg	C	U
Xylenes, Total	15.000	ug/kg	D	U	13.000	ug/kg	C	U
cis-1,3-Dichloropropene	15.000	ug/kg	D	U	13.000	ug/kg	C	U
trans-1,3-Dichloropropene	15.000	ug/kg	D	U	13.000	ug/kg	C	U
Semivolatile Organics								
1,2,4-Trichlorobenzene	500.000	ug/kg	D	U	450.000	ug/kg	C	U
1,2-Dichlorobenzene	500.000	ug/kg	D	U	450.000	ug/kg	C	U
1,3-Dichlorobenzene	500.000	ug/kg	D	U	450.000	ug/kg	C	U
1,4-Dichlorobenzene	500.000	ug/kg	D	U	450.000	ug/kg	C	U
2,4,5-Trichlorophenol	1200.000	ug/kg	D	U	1100.000	ug/kg	C	U
2,4,6-Trichlorophenol	500.000	ug/kg	D	U	450.000	ug/kg	C	U
2,4-Dichlorophenol	500.000	ug/kg	D	U	450.000	ug/kg	C	U
2,4-Dimethylphenol	500.000	ug/kg	D	U	450.000	ug/kg	C	U
2,4-Dinitrophenol	1200.000	ug/kg	D	U	1100.000	ug/kg	C	U
2,4-Dinitrotoluene	500.000	ug/kg	D	U	450.000	ug/kg	C	U
2,6-Dinitrotoluene	500.000	ug/kg	D	U	450.000	ug/kg	C	U
2-Chloronaphthalene	500.000	ug/kg	D	U	450.000	ug/kg	C	U
2-Chlorophenol	500.000	ug/kg	D	U	450.000	ug/kg	C	U
2-Methylnaphthalene	500.000	ug/kg	D	U	450.000	ug/kg	C	U
2-Methylphenol	500.000	ug/kg	D	U	450.000	ug/kg	C	U
2-Nitroaniline	1200.000	ug/kg	D	U	1100.000	ug/kg	C	U
2-Nitrophenol	500.000	ug/kg	D	U	450.000	ug/kg	C	U
3,3'-Dichlorobenzidine	500.000	ug/kg	D	U	450.000	ug/kg	C	U

TABLE C-10

TABLE C-10

SOLID WASTE LANDFILL
CIS SEDIMENT RESULTS
OPERABLE UNIT 2 REMEDIAL INVESTIGATION
FERNALD ENVIRONMENTAL MANAGEMENT PROJECT

SAMPLE ID: FMP-SD-21-009
EAST COORDINATE (FEET): 1379613.08
NORTH COORDINATE (FEET): 482250.46
SAMPLE DEPTH: 0.0 to 0.80 FEET

Radionuclide[a]	Qualifier[b]	Activity Concentration	Uncertainty
Cesium-137	<	0.20	
Neptunium-237	<	0.10	
Lead-210			
Plutonium-238		0.30	.10
Plutonium-239/240	<	0.10	
Radium-226		1.31	0.49
Radium-228			
Ruthenium-106	<	2.00	
Strontium-90	<	0.30	
Technetium-99	<	0.30	
Thorium-228		1.20	.30
Thorium-230		5.00	.70
Thorium-232		1.00	.40
Uranium-234		12.00	1.00
Urnium-235		0.50	.20
Uranium-238		23.00	1.00

[a]RA-226 when reported, were measured by gamma spectrometry and reported on a dry weight basis.

[b]Qualifiers are from the laboratory. No validation qualifiers were available. < = less than.

TABLE C-11

TABLE C-11

SOLID WASTE LANDFILL
RI/FS SURFACE WATER RESULTS
OPERABLE UNIT 2 REMEDIAL INVESTIGATION
FERNALD ENVIRONMENTAL MANAGEMENT PROJECT

PHASE I - RADIOLOGICAL PARAMETERS

BORING NUMBER		ASIT-021				ASIT-021		
SAMPLE NUMBER		001160				001161		
SAMPLING DATE		02/21/89				02/21/89		
RADIOLOGICAL PARAMETERS	FLTD	RESULTS	UNITS	VQ	FLTD	RESULTS	UNITS	VQ
CS-137	FILT	20.000	pci/L	R		NA		
NP-237	FILT	1.000	pci/L	U		NA		
NP-237		NA			UNKN	1.000	pci/L	U
PU-238	FILT	1.000	pci/L	U		NA		
PU-238		NA			UNKN	1.000	pci/L	UJ
PU-239/240	FILT	1.000	pci/L	U		NA		
PU-239/240		NA			UNKN	1.000	pci/L	UJ
RA-226	FILT	1.000	pci/L	U		NA		
RA-226		NA			UNKN	1.000	pci/L	U
RA-228	FILT	3.000	pci/L	UJ		NA		
RA-228		NA			UNKN	3.000	pci/L	UJ
RU-106	FILT	150.000	pci/L	R		NA		
SR-90	FILT	5.000	pci/L	U		NA		
SR-90		NA			UNKN	5.000	pci/L	U
TC-99	FILT	30.000	pci/L	UJ		NA		
TC-99		NA			UNKN	30.000	pci/L	UJ
TH-228	FILT	1.000	pci/L	U		NA		
TH-228		NA			UNKN	1.000	pci/L	U
TH-230	FILT	1.000	pci/L	U		NA		
TH-230		NA			UNKN	1.000	pci/L	U
TH-232	FILT	1.000	pci/L	U		NA		
TH-232		NA			UNKN	1.000	pci/L	U
U-234	FILT	7.300	pci/L	-		NA		
U-234		NA			UNKN	6.100	pci/L	J
U-235/236	FILT	1.000	pci/L	U		NA		
U-235/236		NA			UNKN	1.000	pci/L	UJ
U-238	FILT	13.700	pci/L	-		NA		
U-238		NA			UNKN	9.700	pci/L	J
U-TOTAL	FILT	42.000	ug/L	-		NA		
U-TOTAL		NA			UNKN	26.000	ug/L	-

TABLE C-11
(Continued)

PHASE I - CHEMICAL PARAMETERS

BORING NUMBER		ASIT-021			
SAMPLE NUMBER		001161			
SAMPLING DATE		02/21/89			
CHEMICAL PARAMETERS	FLTD	RESULTS	UNITS	L	VQ
Inorganics					
Aluminum	UNKN	0.161	mg/L	C	-
Antimony	UNKN	0.002	mg/L	C	U
Arsenic	UNKN	0.002	mg/L	C	U
Barium	UNKN	0.063	mg/L	C	-
Beryllium	UNKN	0.002	mg/L	C	-
Cadmium	UNKN	0.006	mg/L	C	-
Calcium	UNKN	47.000	mg/L	C	-
Chromium	UNKN	0.018	mg/L	C	-
Cobalt	UNKN	0.014	mg/L	C	-
Copper	UNKN	0.016	mg/L	C	-
Cyanide	UNKN	0.010	mg/L	C	U
Iron	UNKN	0.087	mg/L	C	-
Lead	UNKN	0.002	mg/L	C	U
Magnesium	UNKN	10.700	mg/L	C	-
Manganese	UNKN	0.065	mg/L	C	-
Mercury	UNKN	0.000	mg/L	C	U
Molybdenum	UNKN	0.023	mg/L	C	-
Nickel	UNKN	0.016	mg/L	C	-
Potassium	UNKN	2.020	mg/L	C	-
Selenium	UNKN	0.002	mg/L	C	U
Silver	UNKN	0.001	mg/L	C	U
Sodium	UNKN	4.960	mg/L	C	-
Thallium	UNKN	0.004	mg/L	C	U
Vanadium	UNKN	0.019	mg/L	C	-
Zinc	UNKN	0.032	mg/L	C	-
Volatile Organics					
1,1,1-Trichloroethane	UNFI	5.000	ug/L	C	UJ
1,1,2,2-Tetrachloroethane	UNFI	5.000	ug/L	C	UJ
1,1,2-Trichloroethane	UNFI	5.000	ug/L	C	UJ
1,1-Dichloroethane	UNFI	5.000	ug/L	C	U
1,1-Dichloroethene	UNFI	5.000	ug/L	C	U
1,2-Dichloroethane	UNFI	5.000	ug/L	C	U
1,2-Dichloroethene	UNFI	5.000	ug/L	C	U
1,2-Dichloropropane	UNFI	5.000	ug/L	C	UJ
2-Butanone	UNFI	10.000	ug/L	C	R
2-Hexanone	UNFI	10.000	ug/L	C	UJ
4-Methyl-2-pentanone	UNFI	10.000	ug/L	C	UJ
Acetone	UNFI	2.000	ug/L	C	U
Benzene	UNFI	5.000	ug/L	C	R
Bromodichloromethane	UNFI	5.000	ug/L	C	UJ

TABLE C-11
(Continued)

PHASE I - CHEMICAL PARAMETERS

BORING NUMBER		ASIT-021			
SAMPLE NUMBER		001161			
SAMPLING DATE		02/21/89			
CHEMICAL PARAMETERS	FLTD	RESULTS	UNITS	L	VQ
Volatile Organics					
Bromoform	UNFI	5.000	ug/L	C	UJ
Bromomethane	UNFI	10.000	ug/L	C	U
Carbon Tetrachloride	UNFI	5.000	ug/L	C	UJ
Carbon disulfide	UNFI	5.000	ug/L	C	U
Chlorobenzene	UNFI	5.000	ug/L	C	R
Chloroethane	UNFI	10.000	ug/L	C	U
Chloroform	UNFI	5.000	ug/L	C	U
Chloromethane	UNFI	10.000	ug/L	C	U
Dibromochloromethane	UNFI	5.000	ug/L	C	UJ
Ethylbenzene	UNFI	5.000	ug/L	C	R
Methylene chloride	UNFI	5.000	ug/L	C	U
Styrene	UNFI	5.000	ug/L	C	R
Tetrachloroethene	UNFI	5.000	ug/L	C	UJ
Toluene	UNFI	5.000	ug/L	C	R
Trichloroethene	UNFI	5.000	ug/L	C	UJ
Vinyl Acetate	UNFI	10.000	ug/L	C	UJ
Vinyl chloride	UNFI	10.000	ug/L	C	U
Xylenes, Total	UNFI	5.000	ug/L	C	R
cis-1,3-Dichloropropene	UNFI	5.000	ug/L	C	UJ
trans-1,3-Dichloropropene	UNFI	5.000	ug/L	C	UJ
Semivolatile Organics					
1,2,4-Trichlorobenzene	UNFI	10.000	ug/L	C	U
1,2-Dichlorobenzene	UNFI	10.000	ug/L	C	U
1,3-Dichlorobenzene	UNFI	10.000	ug/L	C	U
1,4-Dichlorobenzene	UNFI	10.000	ug/L	C	U
2,4,5-Trichlorophenol	UNFI	50.000	ug/L	C	U
2,4,6-Trichlorophenol	UNFI	10.000	ug/L	C	U
2,4-Dichlorophenol	UNFI	10.000	ug/L	C	U
2,4-Dimethylphenol	UNFI	10.000	ug/L	C	U
2,4-Dinitrophenol	UNFI	50.000	ug/L	C	UJ
2,4-Dinitrotoluene	UNFI	10.000	ug/L	C	U
2,6-Dinitrotoluene	UNFI	10.000	ug/L	C	U
2-Chloronaphthalene	UNFI	10.000	ug/L	C	U
2-Chlorophenol	UNFI	10.000	ug/L	C	U
2-Methylnaphthalene	UNFI	10.000	ug/L	C	U
2-Methylphenol	UNFI	10.000	ug/L	C	U
2-Nitroaniline	UNFI	50.000	ug/L	C	UJ
2-Nitrophenol	UNFI	10.000	ug/L	C	U
3,3'-Dichlorobenzidine	UNFI	20.000	ug/L	C	UJ
3-Nitroaniline	UNFI	50.000	ug/L	C	R

TABLE C-11
(Continued)

PHASE I - CHEMICAL PARAMETERS

BORING NUMBER		ASIT-021			
SAMPLE NUMBER		001161			
SAMPLING DATE		02/21/89			
CHEMICAL PARAMETERS	FLTD	RESULTS	UNITS	L	VQ
Semivolatile Organics					
4,6-Dinitro-2-methylphenol	UNFI	50.000	ug/L	C	U
4-Bromophenyl phenyl ether	UNFI	10.000	ug/L	C	U
4-Chloro-3-methylphenol	UNFI	10.000	ug/L	C	U
4-Chlorophenylphenyl ether	UNFI	10.000	ug/L	C	UJ
4-Methylphenol	UNFI	10.000	ug/L	C	U
4-Nitroaniline	UNFI	50.000	ug/L	C	U
4-Nitrophenol	UNFI	50.000	ug/L	C	UJ
Acenaphthene	UNFI	10.000	ug/L	C	U
Acenaphthylene	UNFI	10.000	ug/L	C	U
Anthracene	UNFI	10.000	ug/L	C	U
Benzo(a)anthracene	UNFI	10.000	ug/L	C	U
Benzo(a)pyrene	UNFI	10.000	ug/L	C	U
Benzo(b)fluoranthene	UNFI	10.000	ug/L	C	U
Benzo(g,h,i)perylene	UNFI	10.000	ug/L	C	U
Benzo(k)fluoranthene	UNFI	10.000	ug/L	C	U
Benzoic acid	UNFI	50.000	ug/L	C	UJ
Benzyl alcohol	UNFI	10.000	ug/L	C	UJ
Butyl benzyl phthalate	UNFI	10.000	ug/L	C	U
Chrysene	UNFI	10.000	ug/L	C	U
Di-n-butyl phthalate	UNFI	3.000	ug/L	C	J
Di-n-octyl phthalate	UNFI	10.000	ug/L	C	U
Dibenzo(a,h)anthracene	UNFI	10.000	ug/L	C	U
Dibenzofuran	UNFI	10.000	ug/L	C	U
Diethyl phthalate	UNFI	3.000	ug/L	C	J
Dimethyl phthalate	UNFI	10.000	ug/L	C	U
Fluoranthene	UNFI	10.000	ug/L	C	U
Fluorene	UNFI	10.000	ug/L	C	U
Hexachlorobenzene	UNFI	10.000	ug/L	C	U
Hexachlorobutadiene	UNFI	10.000	ug/L	C	U
Hexachlorocyclopentadiene	UNFI	10.000	ug/L	C	U
Hexachloroethane	UNFI	10.000	ug/L	C	U
Indeno(1,2,3-cd)pyrene	UNFI	10.000	ug/L	C	U
Isophorone	UNFI	10.000	ug/L	C	U
Methyl parathion	UNKN	250.000	ug/L	C	UJ
N-Nitroso-di-n-propylamine	UNFI	10.000	ug/L	C	U
N-Nitrosodiphenylamine	UNFI	10.000	ug/L	C	U
Naphthalene	UNFI	10.000	ug/L	C	U
Nitrobenzene	UNFI	10.000	ug/L	C	U
Parathion	UNKN	250.000	ug/L	C	UJ
Pentachlorophenol	UNFI	50.000	ug/L	C	U
Phenanthrene	UNFI	10.000	ug/L	C	U
Phenol	UNFI	10.000	ug/L	C	U

6508

TABLE C-11
(Continued)

PHASE I - CHEMICAL PARAMETERS

BORING NUMBER		ASIT-021			
SAMPLE NUMBER		001161			
SAMPLING DATE		02/21/89			
CHEMICAL PARAMETERS	FLTD	RESULTS	UNITS	L	VQ
Semivolatile Organics					
Pyrene	UNFI	10.000	ug/L	C	U
bis(2-Chloroethoxy)methane	UNFI	10.000	ug/L	C	U
bis(2-Chloroethyl)ether	UNFI	10.000	ug/L	C	U
bis(2-Chloroisopropyl) ether	UNFI	10.000	ug/L	C	UJ
bis(2-Ethylhexyl) phthalate	UNFI	4.000	ug/L	C	JB
p-Chloroaniline	UNFI	10.000	ug/L	C	R
Pesticide Organics/PCBs					
4,4'-DDD	UNFI	0.100	ug/L	C	U
4,4'-DDE	UNFI	0.100	ug/L	C	U
4,4'-DDT	UNFI	0.100	ug/L	C	U
Aldrin	UNFI	0.050	ug/L	C	U
Aroclor-1016	UNFI	0.500	ug/L	C	U
Aroclor-1221	UNFI	0.500	ug/L	C	U
Aroclor-1232	UNFI	0.500	ug/L	C	U
Aroclor-1242	UNFI	0.500	ug/L	C	U
Aroclor-1248	UNFI	0.500	ug/L	C	U
Aroclor-1254	UNFI	1.000	ug/L	C	U
Aroclor-1260	UNFI	1.000	ug/L	C	U
Azinphosmethyl	UNKN	500.000	ug/L	C	UJ
Demeton	UNKN	250.000	ug/L	C	UJ
Diazinon	UNKN	250.000	ug/L	C	UJ
Dieldrin	UNFI	0.100	ug/L	C	UJ
Disulfoton	UNKN	250.000	ug/L	C	UJ
Endosulfan II	UNFI	0.100	ug/L	C	U
Endosulfan sulfate	UNFI	0.100	ug/L	C	U
Endosulfan-I	UNFI	0.050	ug/L	C	U
Endrin	UNFI	0.100	ug/L	C	U
Endrin ketone	UNFI	0.100	ug/L	C	U
Ethion	UNKN	250.000	ug/L	C	UJ
Heptachlor	UNFI	0.050	ug/L	C	U
Heptachlor epoxide	UNFI	0.050	ug/L	C	U
Malathion	UNKN	250.000	ug/L	C	UJ
Methoxychlor	UNFI	0.500	ug/L	C	U
Toxaphene	UNFI	1.000	ug/L	C	U
alpha-BHC	UNFI	0.050	ug/L	C	U
alpha-Chlordane	UNFI	0.500	ug/L	C	U
beta-BHC	UNFI	0.050	ug/L	C	U
delta-BHC	UNFI	0.050	ug/L	C	U
gamma-BHC (Lindane)	UNFI	0.050	ug/L	C	UJ
gamma-Chlordane	UNFI	0.500	ug/L	C	U

TABLE C-11
(Continued)

PHASE I - CHEMICAL PARAMETERS

BORING NUMBER		ASIT-021			
SAMPLE NUMBER		001161			
SAMPLING DATE		02/21/89			
CHEMICAL PARAMETERS	FLTD	RESULTS	UNITS	L	VQ
General Chemistry					
Ammonia	UNFI	0.100	mg/L	C	U
Chloride	UNFI	12.000	mg/L	C	-
Fluoride	UNFI	0.140	mg/L	C	J
Nitrate	UNFI	1.800	mg/L	C	-
Phenols	UNFI	0.010	mg/L	C	U
Phosphorus	UNFI	0.270	mg/L	C	-
Sulfate	UNFI	36.800	mg/L	C	J
Total Kjeldahl Nitrogen	UNFI	1.028	mg/L	C	-
Total Organic Halides	UNFI	0.019	mg/L	C	J
Total Organic Nitrogen	UNFI	1.030	mg/L	C	-

000268

TABLE C-11
(Continued)

PHASE II - RADIOLOGICAL PARAMETERS

BORING NUMBER		SWL-SW-01				SWL-SW-02		
SAMPLE NUMBER		111289				111291		
SAMPLING DATE		04/07/93				04/06/93		
RADIOLOGICAL PARAMETERS	FLTD	RESULTS	UNITS	VQ	FLTD	RESULTS	UNITS	VQ
CS-137	UNFI	15.300	pci/L	UJ	UNFI	15.800	pci/L	UJ
GROSS ALPHA	UNFI	24.700	pci/L	-	UNFI	32.900	pci/L	-
GROSS BETA	UNFI	11.800	pci/L	J	UNFI	11.500	pci/L	J
NP-237	UNFI	0.493	pci/L	U	UNFI	0.288	pci/L	U
PU-238	UNFI	0.196	pci/L	J	UNFI	0.035	pci/L	J
PU-239/240	UNFI	0.150	pci/L	UJ	UNFI	0.031	pci/L	UJ
RA-226	UNFI	0.141	pci/L	UJ	UNFI	0.139	pci/L	UJ
RA-228	UNFI	1.440	pci/L	UJ	UNFI	1.210	pci/L	UJ
RU-106	UNFI	107.000	pci/L	UJ	UNFI	111.000	pci/L	UJ
SR-90	UNFI	0.580	pci/L	UJ	UNFI	0.744	pci/L	UJ
TC-99	UNFI	12.600	pci/L	UJ	UNFI	12.900	pci/L	UJ
TH-228	UNFI	0.362	pci/L	R	UNFI	0.100	pci/L	UJ
TH-230	UNFI	0.127	pci/L	R	UNFI	0.121	pci/L	UJ
TH-232	UNFI	0.114	pci/L	R	UNFI	0.151	pci/L	UJ
TH-TOTAL	UNFI	1.050	ug/L	R	UNFI	1.390	ug/L	UJ
U-234	UNFI	17.200	pci/L	-	UNFI	17.100	pci/L	-
U-235/236	UNFI	1.300	pci/L	-	UNFI	0.846	pci/L	J
U-238	UNFI	18.700	pci/L	-	UNFI	20.200	pci/L	-
U-TOTAL	UNFI	46.100	ug/L	-	UNFI	59.300	ug/L	-

TABLE C-11
(Continued)

PHASE II - CHEMICAL PARAMETERS

BORING NUMBER		SWL-SW-01						SWL-SW-02				
SAMPLE NUMBER		111289						111291				
SAMPLING DATE		04/07/93						04/06/93				
CHEMICAL PARAMETERS	FLTD	RESULTS	UNITS	L	VQ		FLTD	RESULTS	UNITS	L	VQ	
Inorganics												
Aluminum		NA					FILT	0.197	mg/L	D	U	
Aluminum	UNFI	0.140	mg/L	C	-			NA				
Antimony		NA					FILT	0.005	mg/L	D	UJ	
Antimony	UNFI	0.005	mg/L	C	UJ			NA				
Arsenic		NA					FILT	0.002	mg/L	D	U	
Arsenic	UNFI	0.002	mg/L	C	U			NA				
Barium		NA					FILT	0.041	mg/L	D	-	
Barium	UNFI	0.038	mg/L	C	-			NA				
Beryllium		NA					FILT	0.002	mg/L	D	U	
Beryllium	UNFI	0.002	mg/L	C	U			NA				
Cadmium		NA					FILT	0.005	mg/L	D	U	
Cadmium	UNFI	0.005	mg/L	C	U			NA				
Calcium		NA					FILT	105.000	mg/L	D	-	
Calcium	UNFI	92.500	mg/L	C	-			NA				
Chromium		NA					FILT	0.010	mg/L	D	U	
Chromium	UNFI	0.010	mg/L	C	U			NA				
Cobalt		NA					FILT	0.010	mg/L	D	U	
Cobalt	UNFI	0.010	mg/L	C	U			NA				
Copper		NA					FILT	0.010	mg/L	D	U	
Copper	UNFI	0.010	mg/L	C	U			NA				
Cyanide	UNFI	0.002	mg/L	C	-		UNFI	0.002	mg/L	D	-	
Iron		NA					FILT	0.020	mg/L	D	U	
Iron	UNFI	0.020	mg/L	C	U			NA				
Lead		NA					FILT	0.002	mg/L	D	U	
Lead	UNFI	0.002	mg/L	C	U			NA				
Magnesium		NA					FILT	25.700	mg/L	D	-	
Magnesium	UNFI	23.500	mg/L	C	-			NA				
Manganese		NA					FILT	0.185	mg/L	D	-	
Manganese	UNFI	0.177	mg/L	C	-			NA				
Mercury		NA					FILT	0.000	mg/L	D	U	
Mercury	UNFI	0.000	mg/L	C	U			NA				
Molybdenum		NA					FILT	0.020	mg/L	D	U	
Molybdenum	UNFI	0.020	mg/L	C	U			NA				
Nickel		NA					FILT	0.020	mg/L	D	U	
Nickel	UNFI	0.020	mg/L	C	U			NA				
Potassium		NA					FILT	0.869	mg/L	D	-	
Potassium	UNFI	0.865	mg/L	C	-			NA				
Selenium		NA					FILT	0.002	mg/L	D	U	
Selenium	UNFI	0.002	mg/L	C	U			NA				
Silicon		NA					FILT	2.030	mg/L	D	-	
Silicon	UNFI	1.910	mg/L	C	-			NA				
Silver		NA					FILT	0.010	mg/L	D	U	

TABLE C-11
(Continued)

PHASE II - CHEMICAL PARAMETERS

BORING NUMBER		SWL-SW-01					SWL-SW-02			
SAMPLE NUMBER		111289					111291			
SAMPLING DATE		04/07/93					04/06/93			
CHEMICAL PARAMETERS	FLTD	RESULTS	UNITS	L	VQ	FLTD	RESULTS	UNITS	L	VQ
Inorganics										
Silver	UNFI	0.010	mg/L	C	U		NA			
Sodium		NA				FILT	13.000	mg/L	D	-
Sodium	UNFI	11.300	mg/L	C	-		NA			
Thallium		NA				FILT	0.002	mg/L	D	U
Thallium	UNFI	0.002	mg/L	C	U		NA			
Vanadium		NA				FILT	0.010	mg/L	D	U
Vanadium	UNFI	0.010	mg/L	C	U		NA			
Zinc		NA				FILT	0.005	mg/L	D	U
Zinc	UNFI	0.005	mg/L	C	U		NA			
Volatile Organics										
1,1,1-Trichloroethane	UNFI	10.000	ug/L	C	U	UNFI	10.000	ug/L	D	U
1,1,2,2-Tetrachloroethane	UNFI	10.000	ug/L	C	U	UNFI	10.000	ug/L	D	U
1,1,2-Trichloroethane	UNFI	10.000	ug/L	C	U	UNFI	10.000	ug/L	D	U
1,1-Dichloroethane	UNFI	10.000	ug/L	C	U	UNFI	10.000	ug/L	D	U
1,1-Dichloroethene	UNFI	10.000	ug/L	C	U	UNFI	10.000	ug/L	D	U
1,2-Dichloroethane	UNFI	10.000	ug/L	C	U	UNFI	10.000	ug/L	D	U
1,2-Dichloroethene	UNFI	10.000	ug/L	C	U	UNFI	10.000	ug/L	D	U
1,2-Dichloropropane	UNFI	10.000	ug/L	C	U	UNFI	10.000	ug/L	D	U
2-Butanone	UNFI	10.000	ug/L	C	U	UNFI	10.000	ug/L	D	U
2-Hexanone	UNFI	10.000	ug/L	C	U	UNFI	10.000	ug/L	D	U
4-Methyl-2-pentanone	UNFI	10.000	ug/L	C	U	UNFI	10.000	ug/L	D	U
Acetone	UNFI	10.000	ug/L	C	U	UNFI	10.000	ug/L	D	U
Benzene	UNFI	10.000	ug/L	C	U	UNFI	10.000	ug/L	D	U
Bromodichloromethane	UNFI	10.000	ug/L	C	U	UNFI	10.000	ug/L	D	U
Bromoform	UNFI	10.000	ug/L	C	U	UNFI	10.000	ug/L	D	U
Bromomethane	UNFI	10.000	ug/L	C	UJ	UNFI	10.000	ug/L	D	UJ
Carbon Tetrachloride	UNFI	10.000	ug/L	C	UJ	UNFI	10.000	ug/L	D	UJ
Carbon disulfide	UNFI	10.000	ug/L	C	U	UNFI	10.000	ug/L	D	U
Chlorobenzene	UNFI	10.000	ug/L	C	U	UNFI	10.000	ug/L	D	U
Chloroethane	UNFI	10.000	ug/L	C	U	UNFI	10.000	ug/L	D	U
Chloroform	UNFI	10.000	ug/L	C	U	UNFI	10.000	ug/L	D	U
Chloromethane	UNFI	10.000	ug/L	C	U	UNFI	10.000	ug/L	D	UJ
Dibromochloromethane	UNFI	10.000	ug/L	C	U	UNFI	10.000	ug/L	D	U
Ethylbenzene	UNFI	10.000	ug/L	C	U	UNFI	10.000	ug/L	D	U
Methylene chloride	UNFI	10.000	ug/L	C	U	UNFI	10.000	ug/L	D	U
Styrene	UNFI	10.000	ug/L	C	U	UNFI	10.000	ug/L	D	U
Tetrachloroethene	UNFI	10.000	ug/L	C	U	UNFI	10.000	ug/L	D	U
Toluene	UNFI	10.000	ug/L	C	U	UNFI	10.000	ug/L	D	U
Trichloroethene	UNFI	10.000	ug/L	C	U	UNFI	10.000	ug/L	D	U
Vinyl Acetate	UNFI	10.000	ug/L	C	U	UNFI	10.000	ug/L	D	U

000271

6508

TABLE C-11
(Continued)

PHASE II - CHEMICAL PARAMETERS

BORING NUMBER		SWL-SW-01					SWL-SW-02				
SAMPLE NUMBER		111289					111291				
SAMPLING DATE		04/07/93					04/06/93				
CHEMICAL PARAMETERS	FLTD	RESULTS	UNITS	L	VQ		FLTD	RESULTS	UNITS	L	VQ
Volatile Organics											
Vinyl chloride	UNFI	10.000	ug/L	C	U		UNFI	10.000	ug/L	D	U
Xylenes, Total	UNFI	10.000	ug/L	C	U		UNFI	10.000	ug/L	D	U
cis-1,3-Dichloropropene	UNFI	10.000	ug/L	C	U		UNFI	10.000	ug/L	D	U
trans-1,3-Dichloropropene	UNFI	10.000	ug/L	C	U		UNFI	10.000	ug/L	D	U
Semivolatile Organics											
1,2,4-Trichlorobenzene	UNFI	10.000	ug/L	C	UJ		UNFI	10.000	ug/L	D	UJ
1,2-Dichlorobenzene	UNFI	10.000	ug/L	C	U		UNFI	10.000	ug/L	D	U
1,3-Dichlorobenzene	UNFI	10.000	ug/L	C	U		UNFI	10.000	ug/L	D	U
1,4-Dichlorobenzene	UNFI	10.000	ug/L	C	U		UNFI	10.000	ug/L	D	U
2,4,5-Trichlorophenol	UNFI	25.000	ug/L	C	U		UNFI	25.000	ug/L	D	U
2,4,6-Trichlorophenol	UNFI	10.000	ug/L	C	U		UNFI	10.000	ug/L	D	U
2,4-Dichlorophenol	UNFI	10.000	ug/L	C	U		UNFI	10.000	ug/L	D	U
2,4-Dimethylphenol	UNFI	10.000	ug/L	C	U		UNFI	10.000	ug/L	D	U
2,4-Dinitrophenol	UNFI	25.000	ug/L	C	U		UNFI	25.000	ug/L	D	U
2,4-Dinitrotoluene	UNFI	10.000	ug/L	C	U		UNFI	10.000	ug/L	D	U
2,6-Dinitrotoluene	UNFI	10.000	ug/L	C	U		UNFI	10.000	ug/L	D	U
2-Chloronaphthalene	UNFI	10.000	ug/L	C	U		UNFI	10.000	ug/L	D	U
2-Chlorophenol	UNFI	10.000	ug/L	C	U		UNFI	10.000	ug/L	D	U
2-Methylnaphthalene	UNFI	10.000	ug/L	C	U		UNFI	10.000	ug/L	D	U
2-Methylphenol	UNFI	10.000	ug/L	C	U		UNFI	10.000	ug/L	D	U
2-Nitroaniline	UNFI	25.000	ug/L	C	UJ		UNFI	25.000	ug/L	D	UJ
2-Nitrophenol	UNFI	10.000	ug/L	C	U		UNFI	10.000	ug/L	D	U
3,3'-Dichlorobenzidine	UNFI	10.000	ug/L	C	UJ		UNFI	10.000	ug/L	D	UJ
3-Nitroaniline	UNFI	25.000	ug/L	C	UJ		UNFI	25.000	ug/L	D	UJ
4,6-Dinitro-2-methylphenol	UNFI	25.000	ug/L	C	U		UNFI	25.000	ug/L	D	U
4-Bromophenyl phenyl ether	UNFI	10.000	ug/L	C	U		UNFI	10.000	ug/L	D	U
4-Chloro-3-methylphenol	UNFI	10.000	ug/L	C	U		UNFI	10.000	ug/L	D	U
4-Chlorophenylphenyl ether	UNFI	10.000	ug/L	C	U		UNFI	10.000	ug/L	D	U
4-Methylphenol	UNFI	10.000	ug/L	C	UJ		UNFI	10.000	ug/L	D	UJ
4-Nitroaniline	UNFI	25.000	ug/L	C	UJ		UNFI	25.000	ug/L	D	UJ
4-Nitrophenol	UNFI	25.000	ug/L	C	UJ		UNFI	25.000	ug/L	D	UJ
Acenaphthene	UNFI	10.000	ug/L	C	U		UNFI	10.000	ug/L	D	U
Acenaphthylene	UNFI	10.000	ug/L	C	U		UNFI	10.000	ug/L	D	U
Anthracene	UNFI	10.000	ug/L	C	U		UNFI	10.000	ug/L	D	U
Benzo(a)anthracene	UNFI	10.000	ug/L	C	U		UNFI	10.000	ug/L	D	U
Benzo(a)pyrene	UNFI	10.000	ug/L	C	U		UNFI	10.000	ug/L	D	U
Benzo(b)fluoranthene	UNFI	10.000	ug/L	C	U		UNFI	10.000	ug/L	D	U
Benzo(g,h,i)perylene	UNFI	10.000	ug/L	C	U		UNFI	10.000	ug/L	D	U
Benzo(k)fluoranthene	UNFI	10.000	ug/L	C	UJ		UNFI	10.000	ug/L	D	UJ
Benzoic acid	UNFI	50.000	ug/L	C	U		UNFI	50.000	ug/L	D	U

000272

TABLE C-11
(Continued)

PHASE II - CHEMICAL PARAMETERS

BORING NUMBER		SWL-SW-01					SWL-SW-02				
SAMPLE NUMBER		111289					111291				
SAMPLING DATE		04/07/93					04/06/93				
CHEMICAL PARAMETERS	FLTD	RESULTS	UNITS	L	VQ		FLTD	RESULTS	UNITS	L	VQ
Semivolatile Organics											
Benzyl alcohol	UNFI	10.000	ug/L	C	U		UNFI	10.000	ug/L	D	U
Butyl benzyl phthalate	UNFI	10.000	ug/L	C	U		UNFI	10.000	ug/L	D	U
Carbazole	UNFI	10.000	ug/L	C	U		UNFI	10.000	ug/L	D	U
Chrysene	UNFI	10.000	ug/L	C	U		UNFI	10.000	ug/L	D	U
Di-n-butyl phthalate	UNFI	10.000	ug/L	C	U		UNFI	10.000	ug/L	D	U
Di-n-octyl phthalate	UNFI	10.000	ug/L	C	U		UNFI	10.000	ug/L	D	U
Dibenzo(a,h)anthracene	UNFI	10.000	ug/L	C	U		UNFI	10.000	ug/L	D	U
Dibenzofuran	UNFI	10.000	ug/L	C	U		UNFI	10.000	ug/L	D	U
Diethyl phthalate	UNFI	10.000	ug/L	C	U		UNFI	10.000	ug/L	D	U
Dimethyl phthalate	UNFI	10.000	ug/L	C	U		UNFI	10.000	ug/L	D	U
Fluoranthene	UNFI	10.000	ug/L	C	U		UNFI	10.000	ug/L	D	U
Fluorene	UNFI	10.000	ug/L	C	U		UNFI	10.000	ug/L	D	U
Hexachlorobenzene	UNFI	10.000	ug/L	C	U		UNFI	10.000	ug/L	D	U
Hexachlorobutadiene	UNFI	10.000	ug/L	C	R		UNFI	10.000	ug/L	D	R
Hexachlorocyclopentadiene	UNFI	10.000	ug/L	C	U		UNFI	10.000	ug/L	D	U
Hexachloroethane	UNFI	10.000	ug/L	C	U		UNFI	10.000	ug/L	D	U
Indeno(1,2,3-cd)pyrene	UNFI	10.000	ug/L	C	U		UNFI	10.000	ug/L	D	U
Isophorone	UNFI	10.000	ug/L	C	U		UNFI	10.000	ug/L	D	U
N-Nitroso-di-n-propylamine	UNFI	10.000	ug/L	C	U		UNFI	10.000	ug/L	D	U
N-Nitrosodiphenylamine	UNFI	10.000	ug/L	C	U		UNFI	10.000	ug/L	D	U
Naphthalene	UNFI	10.000	ug/L	C	U		UNFI	10.000	ug/L	D	U
Nitrobenzene	UNFI	10.000	ug/L	C	U		UNFI	10.000	ug/L	D	U
Pentachlorophenol	UNFI	25.000	ug/L	C	U		UNFI	25.000	ug/L	D	U
Phenanthrene	UNFI	10.000	ug/L	C	U		UNFI	10.000	ug/L	D	U
Phenol	UNFI	10.000	ug/L	C	U		UNFI	10.000	ug/L	D	U
Pyrene	UNFI	10.000	ug/L	C	U		UNFI	10.000	ug/L	D	U
bis(2-Chloroethoxy)methane	UNFI	10.000	ug/L	C	U		UNFI	10.000	ug/L	D	U
bis(2-Chloroethyl)ether	UNFI	10.000	ug/L	C	U		UNFI	10.000	ug/L	D	U
bis(2-Chloroisopropyl) ether	UNFI	10.000	ug/L	C	UJ		UNFI	10.000	ug/L	D	UJ
bis(2-Ethylhexyl) phthalate	UNFI	1.000	ug/L	C	-		UNFI	10.000	ug/L	D	U
p-Chloroaniline	UNFI	10.000	ug/L	C	UJ		UNFI	10.000	ug/L	D	UJ
Pesticide Organics/PCBs											
4,4'-DDD	UNFI	0.100	ug/L	C	UJ		UNFI	0.100	ug/L	D	UJ
4,4'-DDE	UNFI	0.100	ug/L	C	U		UNFI	0.100	ug/L	D	U
4,4'-DDT	UNFI	0.100	ug/L	C	U		UNFI	0.100	ug/L	D	U
Aldrin	UNFI	0.050	ug/L	C	U		UNFI	0.050	ug/L	D	U
Aroclor-1016	UNFI	1.000	ug/L	C	U		UNFI	1.000	ug/L	D	U
Aroclor-1221	UNFI	2.000	ug/L	C	U		UNFI	2.000	ug/L	D	U
Aroclor-1232	UNFI	1.000	ug/L	C	U		UNFI	1.000	ug/L	D	U
Aroclor-1242	UNFI	1.000	ug/L	C	U		UNFI	1.000	ug/L	D	U

FEMP-OU02-6 FINAL
January 21, 1995

TABLE C-11
(Continued)

PHASE II - CHEMICAL PARAMETERS

BORING NUMBER		SWL-SW-01					SWL-SW-02			
SAMPLE NUMBER		111289					111291			
SAMPLING DATE		04/07/93					04/06/93			
CHEMICAL PARAMETERS	FLTD	RESULTS	UNITS	L	VQ	FLTD	RESULTS	UNITS	L	VQ
Pesticide Organics/PCBs										
Aroclor-1248	UNFI	1.000	ug/L	C	U	UNFI	1.000	ug/L	D	U
Aroclor-1254	UNFI	1.000	ug/L	C	U	UNFI	1.000	ug/L	D	U
Aroclor-1260	UNFI	1.000	ug/L	C	U	UNFI	1.000	ug/L	D	U
Dieldrin	UNFI	0.100	ug/L	C	U	UNFI	0.100	ug/L	D	U
Endosulfan II	UNFI	0.100	ug/L	C	U	UNFI	0.100	ug/L	D	U
Endosulfan sulfate	UNFI	0.100	ug/L	C	U	UNFI	0.100	ug/L	D	U
Endosulfan-I	UNFI	0.050	ug/L	C	U	UNFI	0.050	ug/L	D	U
Endrin	UNFI	0.100	ug/L	C	U	UNFI	0.100	ug/L	D	U
Endrin aldehyde	UNFI	0.100	ug/L	C	U	UNFI	0.100	ug/L	D	U
Endrin ketone	UNFI	0.100	ug/L	C	U	UNFI	0.100	ug/L	D	U
Heptachlor	UNFI	0.050	ug/L	C	U	UNFI	0.050	ug/L	D	U
Heptachlor epoxide	UNFI	0.050	ug/L	C	U	UNFI	0.050	ug/L	D	U
Methoxychlor	UNFI	0.500	ug/L	C	U	UNFI	0.500	ug/L	D	U
Toxaphene	UNFI	5.000	ug/L	C	U	UNFI	5.000	ug/L	D	U
alpha-BHC	UNFI	0.050	ug/L	C	U	UNFI	0.050	ug/L	D	U
alpha-Chlordane	UNFI	0.050	ug/L	C	U	UNFI	0.050	ug/L	D	U
beta-BHC	UNFI	0.050	ug/L	C	U	UNFI	0.050	ug/L	D	U
delta-BHC	UNFI	0.050	ug/L	C	U	UNFI	0.050	ug/L	D	U
gamma-BHC (Lindane)	UNFI	0.050	ug/L	C	U	UNFI	0.050	ug/L	D	U
gamma-Chlordane	UNFI	0.050	ug/L	C	U	UNFI	0.050	ug/L	D	U
General Chemistry										
Alkalinity	UNFI	276.500	mg/L	B	-	UNFI	276.000	mg/L	B	-
Ammonia	UNFI	0.100	mg/L	B	U	UNFI	0.100	mg/L	B	U
Chloride	UNFI	17.100	mg/L	B	-	UNFI	24.600	mg/L	B	-
Fluoride	UNFI	0.190	mg/L	B	-	UNFI	0.220	mg/L	B	-
Nitrate	UNFI	2.340	mg/L	B	J	UNFI	21.800	mg/L	B	UJ
Phenols	UNFI	0.010	mg/L	B	U	UNFI	0.010	mg/L	B	U
Sulfate	UNFI	2.000	mg/L	B	U	UNFI	61.010	mg/L	B	-
Sulfide	UNFI	1.010	mg/L	B	-	UNFI	0.500	mg/L	B	U
Total Kjeldahl Nitrogen	UNFI	0.230	mg/L	B	-	UNFI	0.200	mg/L	B	-
Total Organic Carbon	UNFI	2.800	mg/L	B	-	UNFI	2.700	mg/L	B	-
Total Organic Halides	UNFI	0.010	mg/L	B	U	UNFI	0.010	mg/L	B	U
Total Organic Nitrogen	UNFI	0.230	mg/L	B	-	UNFI	0.200	mg/L	B	-
Total Phosphorous	UNFI	0.040	mg/L	B	-	UNFI	0.030	mg/L	B	-

TABLE C-12

TABLE C-12A

SOLID WASTE LANDFILL
RI/FS GROUNDWATER RESULTS
OPERABLE UNIT 2 REMEDIAL INVESTIGATION
FERNALD ENVIRONMENTAL MANAGEMENT PROJECT

PHASE I - RADIOLOGICAL PARAMETERS

BORING NUMBER		1035				1035				1035		
SAMPLE NUMBER		066826				003931				003245		
SAMPLING DATE		01/06/90				02/05/89				05/25/88		
RADIOLOGICAL PARAMETERS	FLTD	RESULTS	UNITS	VQ	FLTD	RESULTS	UNITS	VQ	FLTD	RESULTS	UNITS	VQ
CS-137		NA			*U	20.000	pci/L	R	*U	20.000	pci/L	R
NP-237		NA			*U	1.000	pci/L	U	*U	1.000	pci/L	-
PU-238		NA			*U	1.000	pci/L	UJ	*U	1.000	pci/L	U
PU-239/240		NA			*U	1.000	pci/L	UJ	*U	1.000	pci/L	U
RA-226		NA			*U	1.000	pci/L	U	*U	2.000	pci/L	-
RA-228		NA			*U	3.000	pci/L	UJ	*U	5.000	pci/L	-
RU-106		NA			*U	150.000	pci/L	R	*U	150.000	pci/L	R
SR-90		NA			*U	5.000	pci/L	U	*U	5.000	pci/L	U
TC-99		NA			*U	30.000	pci/L	UJ	*U	30.000	pci/L	U
TC-99	UNKN	30.000	pci/L	U		NA				NA		
TH-228		NA			*U	1.000	pci/L	U	*U	4.000	pci/L	-
TH-228	UNKN	1.940	pci/L	-		NA				NA		
TH-230		NA			*U	1.000	pci/L	U	*U	4.600	pci/L	-
TH-230	UNKN	2.030	pci/L	J		NA				NA		
TH-232		NA			*U	1.000	pci/L	U	*U	2.600	pci/L	-
TH-TOTAL		NA			*U	3.000	ug/L	U		NA		
U-234		NA			*U	1.000	pci/L	U	*U	4.600	pci/L	-
U-234	UNKN	1.640	pci/L	R		NA				NA		
U-235	UNKN	1.000	pci/L	U		NA				NA		
U-235/236		NA			*U	1.000	pci/L	U	*U	1.000	pci/L	U
U-238		NA			*U	1.000	pci/L	U	*U	3.900	pci/L	-
U-238	UNKN	2.880	pci/L	-		NA				NA		
U-TOTAL		NA			*U	3.000	ug/L	-	*U	17.000	ug/L	-
U-TOTAL	UNKN	8.190	ug/L	J		NA				NA		

000275

6508

TABLE C-12A
(Continued)

PHASE I - RADIOLOGICAL PARAMETERS

BORING NUMBER		1035				1035				1038		
SAMPLE NUMBER		003560				003736				003947		
SAMPLING DATE		08/11/88				11/15/88				02/05/89		
RADIOLOGICAL PARAMETERS	FLTD	RESULTS	UNITS	VQ	FLTD	RESULTS	UNITS	VQ	FLTD	RESULTS	UNITS	VQ
CS-137	*U	20.000	pci/L	R	*U	20.000	pci/L	R	*U	20.000	pci/L	R
NP-237	*U	1.000	pci/L	UJ	*U	1.000	pci/L	UJ	*U	1.000	pci/L	U
PU-238	*U	1.000	pci/L	U	*U	1.000	pci/L	UJ	*U	1.000	pci/L	UJ
PU-239/240	*U	1.000	pci/L	U	*U	1.000	pci/L	UJ	*U	1.000	pci/L	UJ
RA-226	*U	1.000	pci/L	U	*U	1.000	pci/L	U	*U	1.000	pci/L	U
RA-228	*U	3.000	pci/L	U	*U	3.000	pci/L	U	*U	3.000	pci/L	UJ
RU-106	*U	150.000	pci/L	R	*U	150.000	pci/L	R	*U	150.000	pci/L	R
SR-90	*U	5.000	pci/L	R	*U	5.000	pci/L	U	*U	5.000	pci/L	U
TC-99	*U	30.000	pci/L	U	*U	30.300	pci/L	UJ	*U	30.000	pci/L	UJ
TH-228	*U	1.000	pci/L	UJ	*U	1.000	pci/L	UJ	*U	1.000	pci/L	U
TH-230	*U	1.000	pci/L	UJ	*U	1.000	pci/L	UJ	*U	1.000	pci/L	U
TH-232	*U	1.000	pci/L	UJ	*U	1.000	pci/L	UJ	*U	1.000	pci/L	U
TH-TOTAL	*U	3.000	ug/L	UJ	*U	4.000	ug/L	UJ	*U	3.000	ug/L	U
U-234	*U	1.000	pci/L	U	*U	1.200	pci/L	J	*U	1.500	pci/L	-
U-235/236	*U	1.000	pci/L	U	*U	1.000	pci/L	UJ	*U	1.000	pci/L	U
U-238	*U	1.000	pci/L	-	*U	1.200	pci/L	J	*U	1.500	pci/L	-
U-TOTAL	*U	2.000	ug/L	-	*U	3.000	ug/L	-	*U	4.000	ug/L	-

000278

TABLE C-12A
(Continued)

PHASE I - RADIOLOGICAL PARAMETERS

BORING NUMBER	1038				1038				1038			
SAMPLE NUMBER	003183				066431				066495			
SAMPLING DATE	05/11/88				06/18/89				08/13/89			
RADIOLOGICAL PARAMETERS	FLTD	RESULTS	UNITS	VQ	FLTD	RESULTS	UNITS	VQ	FLTD	RESULTS	UNITS	VQ
CS-137	*U	20.000	pci/L	R		NA				NA		
NP-237	*U	1.000	pci/L	U		NA				NA		
PU-238	*U	1.000	pci/L	U		NA				NA		
PU-239/240	*U	1.000	pci/L	U		NA				NA		
RA-226	*U	1.000	pci/L	U		NA				NA		
RA-228	*U	3.000	pci/L	U		NA				NA		
RU-106	*U	150.000	pci/L	R		NA				NA		
SR-90	*U	5.000	pci/L	U		NA				NA		
TC-99	*U	30.000	pci/L	U		NA				NA		
TC-99		NA			UNKN	30.000	pci/L	U	UNKN	30.000	pci/L	U
TH-228	*U	1.000	pci/L	U		NA				NA		
TH-228		NA			UNKN	1.000	pci/L	U	UNKN	1.000	pci/L	U
TH-230	*U	1.000	pci/L	U		NA				NA		
TH-230		NA			UNKN	1.000	pci/L	U	UNKN	1.000	pci/L	U
TH-232	*U	1.000	pci/L	U		NA				NA		
U-234	*U	1.700	pci/L	-		NA				NA		
U-234		NA			UNKN	3.100	pci/L	-	UNKN	1.700	pci/L	J
U-235		NA				NA			UNKN	1.000	pci/L	U
U-235/236	*U	1.000	pci/L	U		NA				NA		
U-235/236		NA			UNKN	1.000	pci/L	U		NA		
U-238	*U	1.400	pci/L	-		NA				NA		
U-238		NA			UNKN	2.000	pci/L	-	UNKN	1.300	pci/L	J
U-TOTAL	*U	5.000	ug/L	J		NA				NA		
U-TOTAL		NA			UNKN	5.000	ug/L	-	UNKN	4.000	ug/L	-

TABLE C-12A
(Continued)

PHASE I - RADIOLOGICAL PARAMETERS

BORING NUMBER	1038				1038				1038			
SAMPLE NUMBER	003518				003762				066666			
SAMPLING DATE	08/22/88				11/20/88				11/21/89			
RADIOLOGICAL PARAMETERS	FLTD	RESULTS	UNITS	VQ	FLTD	RESULTS	UNITS	VQ	FLTD	RESULTS	UNITS	VQ
CS-137	*U	20.000	pci/L	R	*U	6.000	pci/L	R		NA		
NP-237	*U	1.000	pci/L	UJ	*U	0.200	pci/L	UJ		NA		
PU-238	*U	1.000	pci/L	U	*U	0.100	pci/L	UJ		NA		
PU-239/240	*U	1.000	pci/L	U	*U	0.100	pci/L	UJ		NA		
RA-226	*U	1.000	pci/L	UJ	*U	0.200	pci/L	UJ		NA		
RA-228	*U	3.000	pci/L	U	*U	2.300	pci/L	UJ		NA		
RU-106	*U	150.000	pci/L	R	*U	74.000	pci/L	UJ		NA		
SR-90	*U	5.000	pci/L	U	*U	1.200	pci/L	UJ		NA		
TC-99	*U	30.000	pci/L	U	*U	26.000	pci/L	UJ		NA		
TC-99		NA				NA			UNKN	30.000	pci/L	R
TH-228	*U	1.000	pci/L	UJ	*U	0.500	pci/L	UJ		NA		
TH-228		NA				NA			UNKN	4.400	pci/L	R
TH-230	*U	1.000	pci/L	UJ	*U	0.500	pci/L	UJ		NA		
TH-230		NA				NA			UNKN	1.800	pci/L	R
TH-232	*U	1.000	pci/L	UJ	*U	0.500	pci/L	UJ		NA		
TH-232		NA				NA			UNKN	3.800	pci/L	R
TH-TOTAL	*U	5.000	ug/L	UJ	*U	5.000	ug/L	UJ		NA		
U-234	*U	1.900	pci/L	J	*U	2.300	pci/L	J		NA		
U-234		NA				NA			UNKN	6.900	pci/L	R
U-235/236	*U	1.000	pci/L	UJ	*U	0.500	pci/L	UJ		NA		
U-235/236		NA				NA			UNKN	1.000	pci/L	R
U-238	*U	1.400	pci/L	J	*U	1.200	pci/L	J		NA		
U-238		NA				NA			UNKN	5.900	pci/L	R
U-TOTAL	*U	4.000	ug/L	-	*U	4.500	ug/L	J		NA		
U-TOTAL		NA				NA			UNKN	11.000	ug/L	R

000278

TABLE C-12A
(Continued)

PHASE I - RADIOLOGICAL PARAMETERS

BORING NUMBER		1719				2027				2027		
SAMPLE NUMBER		047006				003941				003168		
SAMPLING DATE		06/09/92				03/08/89				05/09/88		
RADIOLOGICAL PARAMETERS	FLTD	RESULTS	UNITS	VQ	FLTD	RESULTS	UNITS	VQ	FLTD	RESULTS	UNITS	VQ
CS-137		NA			*U	20.000	pci/L	R	*U	20.000	pci/L	R
NP-237		NA			*U	1.000	pci/L	U	*U	1.000	pci/L	U
PU-238		NA			*U	1.000	pci/L	U	*U	1.000	pci/L	U
PU-239/240		NA			*U	1.000	pci/L	U	*U	1.000	pci/L	U
RA-226		NA			*U	1.000	pci/L	U	*U	1.600	pci/L	-
RA-228		NA			*U	3.000	pci/L	UJ	*U	3.000	pci/L	R
RU-106		NA			*U	150.000	pci/L	R	*U	150.000	pci/L	R
SR-90		NA			*U	5.000	pci/L	U	*U	5.000	pci/L	U
TC-99		NA			*U	30.000	pci/L	UJ	*U	30.000	pci/L	U
TH-228		NA			*U	1.000	pci/L	U	*U	1.000	pci/L	U
TH-230		NA			*U	1.000	pci/L	U	*U	1.000	pci/L	U
TH-232		NA			*U	1.000	pci/L	U	*U	1.000	pci/L	U
TH-TOTAL		NA			*U	4.000	ug/L	U		NA		
U-234		NA			*U	3.300	pci/L	J	*U	1.600	pci/L	-
U-235/236		NA			*U	1.000	pci/L	UJ	*U	1.000	pci/L	U
U-238		NA			*U	2.400	pci/L	J	*U	2.000	pci/L	-
U-TOTAL		NA			*U	7.000	ug/L	-	*U	6.000	ug/L	-
U-TOTAL	UNKN	2390.000	ug/L	NV		NA				NA		

TABLE C-12A
(Continued)

PHASE I - RADIOLOGICAL PARAMETERS

BORING NUMBER	2027				2027				2027			
SAMPLE NUMBER	066447				003453				003454 DUPLICATE			
SAMPLING DATE	06/27/89				08/10/88				08/10/88			
RADIOLOGICAL PARAMETERS	FLTD	RESULTS	UNITS	VQ	FLTD	RESULTS	UNITS	VQ	FLTD	RESULTS	UNITS	VQ
CS-137		NA			*U	20.000	pci/L	R	*U	20.000	pci/L	R
NP-237		NA			*U	1.000	pci/L	UJ	*U	1.000	pci/L	UJ
PU-238		NA			*U	1.000	pci/L	UJ	*U	1.000	pci/L	UJ
PU-239/240		NA			*U	1.000	pci/L	UJ	*U	1.000	pci/L	UJ
RA-226		NA			*U	1.200	pci/L	-	*U	1.000	pci/L	U
RA-228		NA			*U	3.000	pci/L	U	*U	3.000	pci/L	U
RU-106		NA			*U	150.000	pci/L	R	*U	150.000	pci/L	R
SR-90		NA			*U	5.000	pci/L	U	*U	5.000	pci/L	U
TC-99		NA			*U	30.000	pci/L	U	*U	30.000	pci/L	U
TC-99	UNKN	30.000	pci/L	U		NA				NA		
TH-228		NA			*U	1.000	pci/L	UJ	*U	1.000	pci/L	UJ
TH-228	UNKN	1.000	pci/L	U		NA				NA		
TH-230		NA			*U	1.000	pci/L	UJ	*U	1.000	pci/L	UJ
TH-230	UNKN	1.000	pci/L	U		NA				NA		
TH-232		NA			*U	1.000	pci/L	UJ	*U	1.000	pci/L	UJ
TH-TOTAL		NA			*U	4.000	ug/L	UJ	*U	5.000	ug/L	UJ
U-234		NA			*U	2.500	pci/L	J	*U	2.200	pci/L	J
U-234	UNKN	18.700	pci/L	-		NA				NA		
U-235/236		NA			*U	1.000	pci/L	UJ	*U	1.000	pci/L	UJ
U-235/236	UNKN	1.000	pci/L	U		NA				NA		
U-238		NA			*U	2.300	pci/L	J	*U	3.100	pci/L	J
U-238	UNKN	15.400	pci/L	-		NA				NA		
U-TOTAL		NA			*U	6.000	ug/L	-	*U	6.000	ug/L	-
U-TOTAL	UNKN	46.000	ug/L	-		NA				NA		

000280

TABLE C-12A
(Continued)

PHASE I - RADIOLOGICAL PARAMETERS

BORING NUMBER	2027				2027				2027			
SAMPLE NUMBER	066580				066581 DUPLICATE				066708			
SAMPLING DATE	09/10/89				09/10/89				11/16/89			
RADIOLOGICAL PARAMETERS	FLTD	RESULTS	UNITS	VQ	FLTD	RESULTS	UNITS	VQ	FLTD	RESULTS	UNITS	VQ
TC-99	UNKN	30.000	pci/L	U	UNKN	30.000	pci/L	U	UNKN	30.000	pci/L	UJ
TH-228	UNKN	1.000	pci/L	U	UNKN	1.000	pci/L	U	UNKN	1.000	pci/L	U
TH-230	UNKN	1.000	pci/L	U	UNKN	1.000	pci/L	U	UNKN	1.000	pci/L	U
U-234	UNKN	2.400	pci/L	-	UNKN	7.900	pci/L	-	UNKN	6.260	pci/L	J
U-235/236	UNKN	1.000	pci/L	U	UNKN	1.000	pci/L	U	UNKN	1.000	pci/L	U
U-238	UNKN	4.700	pci/L	-	UNKN	6.300	pci/L	-	UNKN	5.220	pci/L	-
U-TOTAL	UNKN	20.000	ug/L	-	UNKN	20.000	ug/L	-	UNKN	13.000	ug/L	-

TABLE C-12A
(Continued)

PHASE I - RADIOLOGICAL PARAMETERS

BORING NUMBER		2027				2027				2037		
SAMPLE NUMBER		066742 DUPLICATE				003731				003917		
SAMPLING DATE		11/16/89				12/01/88				02/22/89		
RADIOLOGICAL PARAMETERS	FLTD	RESULTS	UNITS	VQ	FLTD	RESULTS	UNITS	VQ	FLTD	RESULTS	UNITS	VQ
CS-137		NA			*U	20.000	pci/L	R	*U	20.000	pci/L	R
NP-237		NA			*U	1.000	pci/L	UJ	*U	1.000	pci/L	U
PU-238		NA			*U	1.000	pci/L	UJ	*U	1.000	pci/L	U
PU-239/240		NA			*U	1.000	pci/L	UJ	*U	1.000	pci/L	U
RA-226		NA			*U	1.000	pci/L	U	*U	1.000	pci/L	UJ
RA-228		NA			*U	3.000	pci/L	U	*U	3.000	pci/L	UJ
RU-106		NA			*U	150.000	pci/L	R	*U	150.000	pci/L	R
SR-90		NA			*U	5.000	pci/L	U	*U	5.000	pci/L	U
TC-99		NA			*U	30.000	pci/L	U	*U	30.000	pci/L	UJ
TC-99	UNKN	30.000	pci/L	UJ		NA				NA		
TH-228		NA			*U	1.000	pci/L	UJ	*U	1.000	pci/L	U
TH-228	UNKN	1.000	pci/L	U		NA				NA		
TH-230		NA			*U	1.000	pci/L	UJ	*U	1.000	pci/L	U
TH-230	UNKN	1.000	pci/L	U		NA				NA		
TH-232		NA			*U	1.000	pci/L	UJ	*U	1.000	pci/L	U
TH-TOTAL		NA			*U	11.000	ug/L	D	*U	3.000	ug/L	U
U-234		NA			*U	2.900	pci/L	R	*U	1.000	pci/L	U
U-234	UNKN	5.960	pci/L	J		NA				NA		
U-235/236		NA			*U	1.000	pci/L	UJ	*U	1.000	pci/L	U
U-235/236	UNKN	1.000	pci/L	U		NA				NA		
U-238		NA			*U	2.600	pci/L	R	*U	1.000	pci/L	U
U-238	UNKN	5.160	pci/L	-		NA				NA		
U-TOTAL		NA			*U	6.000	ug/L	U	*U	3.000	ug/L	J
U-TOTAL	UNKN	12.000	ug/L	-		NA				NA		

000282

TABLE C-12A
(Continued)

PHASE I - RADIOLOGICAL PARAMETERS

BORING NUMBER	2037				2037				2037			
SAMPLE NUMBER	003248				003249 DUPLICATE				066461			
SAMPLING DATE	06/01/88				06/01/88				06/28/89			
RADIOLOGICAL PARAMETERS	FLTD	RESULTS	UNITS	VQ	FLTD	RESULTS	UNITS	VQ	FLTD	RESULTS	UNITS	VQ
CS-137	*U	20.000	pci/L	R	*U	20.000	pci/L	R		NA		
NP-237	*U	1.000	pci/L	U	*U	1.000	pci/L	U		NA		
PU-238	*U	1.000	pci/L	U	*U	1.000	pci/L	U		NA		
PU-239/240	*U	1.000	pci/L	U	*U	1.000	pci/L	U		NA		
RA-226	*U	1.000	pci/L	U	*U	1.000	pci/L	U		NA		
RA-228	*U	3.000	pci/L	U	*U	3.000	pci/L	U		NA		
RU-106	*U	150.000	pci/L	R	*U	150.000	pci/L	R		NA		
SR-90	*U	5.000	pci/L	U	*U	5.000	pci/L	U		NA		
TC-99	*U	30.000	pci/L	U	*U	30.000	pci/L	U		NA		
TC-99		NA				NA			UNKN	30.000	pci/L	UJ
TH-228	*U	1.000	pci/L	U	*U	1.300	pci/L	-		NA		
TH-228		NA				NA			UNKN	1.000	pci/L	UJ
TH-230	*U	1.000	pci/L	U	*U	2.800	pci/L	-		NA		
TH-230		NA				NA			UNKN	1.000	pci/L	UJ
TH-232	*U	1.000	pci/L	U	*U	1.000	pci/L	U		NA		
U-234	*U	1.700	pci/L	-	*U	1.400	pci/L	-		NA		
U-234		NA				NA			UNKN	1.000	pci/L	UJ
U-235/236	*U	1.000	pci/L	U	*U	1.000	pci/L	U		NA		
U-235/236		NA				NA			UNKN	1.000	pci/L	UJ
U-238	*U	2.000	pci/L	-	*U	2.200	pci/L	-		NA		
U-238		NA				NA			UNKN	1.000	pci/L	UJ
U-TOTAL	*U	4.000	ug/L	J	*U	4.000	ug/L	J		NA		
U-TOTAL		NA				NA			UNKN	1.000	ug/L	U

TABLE C-12A
(Continued)

PHASE I - RADIOLOGICAL PARAMETERS

BORING NUMBER		2037				2037				2037		
SAMPLE NUMBER		003448				066540				003718		
SAMPLING DATE		08/08/88				08/25/89				11/18/88		
RADIOLOGICAL PARAMETERS	FLTD	RESULTS	UNITS	VQ	FLTD	RESULTS	UNITS	VQ	FLTD	RESULTS	UNITS	VQ
CS-137	*U	20.000	pci/L	R		NA			*U	20.000	pci/L	R
NP-237	*U	1.000	pci/L	UJ		NA			*U	1.000	pci/L	U
PU-238	*U	1.000	pci/L	U		NA			*U	1.000	pci/L	U
PU-239/240	*U	1.000	pci/L	U		NA			*U	1.000	pci/L	U
RA-226	*U	1.000	pci/L	R		NA			*U	1.000	pci/L	U
RA-228	*U	3.000	pci/L	U		NA			*U	3.000	pci/L	U
RU-106	*U	150.000	pci/L	R		NA			*U	150.000	pci/L	R
SR-90	*U	5.000	pci/L	U		NA			*U	5.000	pci/L	U
TC-99	*U	30.000	pci/L	UJ		NA			*U	30.000	pci/L	U
TC-99		NA			UNKN	30.000	pci/L	U		NA		
TH-228	*U	1.000	pci/L	U		NA			*U	1.000	pci/L	U
TH-228		NA			UNKN	1.000	pci/L	U		NA		
TH-230	*U	1.000	pci/L	U		NA			*U	1.000	pci/L	U
TH-230		NA			UNKN	1.000	pci/L	U		NA		
TH-232	*U	1.000	pci/L	U		NA			*U	1.000	pci/L	U
TH-TOTAL	*U	2.000	ug/L	U		NA			*U	4.000	ug/L	U
U-234	*U	1.000	pci/L	U		NA			*U	1.000	pci/L	U
U-234		NA			UNKN	1.000	pci/L	U		NA		
U-235/236	*U	1.000	pci/L	U		NA			*U	1.000	pci/L	U
U-235/236		NA			UNKN	1.000	pci/L	U		NA		
U-238	*U	1.000	pci/L	U		NA			*U	1.000	pci/L	U
U-238		NA			UNKN	1.000	pci/L	U		NA		
U-TOTAL	*U	2.000	ug/L	-		NA			*U	1.000	ug/L	U
U-TOTAL		NA			UNKN	2.000	ug/L	-		NA		

000284

TABLE C-12A
(Continued)

PHASE I - RADIOLOGICAL PARAMETERS

BORING NUMBER		2037				2052				2052		
SAMPLE NUMBER		066710				066847				003892		
SAMPLING DATE		11/19/89				01/04/90				02/08/89		
RADIOLOGICAL PARAMETERS	FLTD	RESULTS	UNITS	VQ	FLTD	RESULTS	UNITS	VQ	FLTD	RESULTS	UNITS	VQ
CS-137		NA				NA			*U	20.000	pci/L	R
NP-237		NA				NA			*U	1.000	pci/L	U
PU-238		NA				NA			*U	1.000	pci/L	U
PU-239/240		NA				NA			*U	1.000	pci/L	U
RA-226		NA				NA			*U	1.000	pci/L	U
RA-228		NA				NA			*U	3.000	pci/L	UJ
RU-106		NA				NA			*U	150.000	pci/L	R
SR-90		NA				NA			*U	5.000	pci/L	U
TC-99		NA				NA			*U	30.000	pci/L	U
TC-99	UNKN	30.000	pci/L	UJ	UNKN	30.000	pci/L	U		NA		
TH-228		NA				NA			*U	1.000	pci/L	U
TH-228	UNKN	1.000	pci/L	U	UNKN	1.000	pci/L	U		NA		
TH-230		NA				NA			*U	1.000	pci/L	U
TH-230	UNKN	1.000	pci/L	UJ	UNKN	1.000	pci/L	U		NA		
TH-232		NA				NA			*U	1.000	pci/L	U
TH-TOTAL		NA				NA			*U	2.000	ug/L	U
U-234		NA				NA			*U	1.000	pci/L	U
U-234	UNKN	2.000	pci/L	-	UNKN	2.940	pci/L	R		NA		
U-235	UNKN	1.000	pci/L	U	UNKN	1.000	pci/L	U		NA		
U-235/236		NA				NA			*U	1.000	pci/L	U
U-238		NA				NA			*U	1.000	pci/L	U
U-238	UNKN	1.520	pci/L	-	UNKN	3.110	pci/L	-		NA		
U-TOTAL		NA				NA			*U	1.000	ug/L	U
U-TOTAL	UNKN	5.000	ug/L	J	UNKN	10.100	ug/L	J		NA		

000285

6508

TABLE C-12A
(Continued)

PHASE I - RADIOLOGICAL PARAMETERS

BORING NUMBER		2052				2052				2052		
SAMPLE NUMBER		003587				003476 DUPLICATE				003791		
SAMPLING DATE		09/13/88				12/16/88				12/16/88		
RADIOLOGICAL PARAMETERS	FLTD	RESULTS	UNITS	VQ	FLTD	RESULTS	UNITS	VQ	FLTD	RESULTS	UNITS	VQ
CS-137		NA			*U	20.000	pci/L	R	*U	20.000	pci/L	R
CS-137	UNFI	20.000	pci/L	R		NA				NA		
NP-237		NA			*U	1.000	pci/L	U	*U	1.000	pci/L	U
NP-237	UNFI	1.000	pci/L	UJ		NA				NA		
PU-238		NA			*U	1.000	pci/L	UJ	*U	1.000	pci/L	UJ
PU-238	UNFI	1.000	pci/L	U		NA				NA		
PU-239/240		NA			*U	1.000	pci/L	UJ	*U	1.000	pci/L	UJ
PU-239/240	UNFI	1.000	pci/L	U		NA				NA		
RA-226		NA			*U	1.000	pci/L	U	*U	1.000	pci/L	U
RA-226	UNFI	1.000	pci/L	R		NA				NA		
RA-228		NA			*U	3.000	pci/L	U	*U	3.000	pci/L	U
RA-228	UNFI	5.900	pci/L	R		NA				NA		
RU-106		NA			*U	150.000	pci/L	R	*U	150.000	pci/L	R
RU-106	UNFI	150.000	pci/L	R		NA				NA		
SR-90		NA			*U	5.000	pci/L	U	*U	5.000	pci/L	U
SR-90	UNFI	5.000	pci/L	U		NA				NA		
TC-99		NA			*U	30.000	pci/L	U	*U	30.000	pci/L	U
TC-99	UNFI	30.000	pci/L	U		NA				NA		
TH-228		NA			*U	1.000	pci/L	U	*U	1.000	pci/L	U
TH-228	UNFI	1.000	pci/L	UJ		NA				NA		
TH-230		NA			*U	1.000	pci/L	U	*U	1.000	pci/L	U
TH-230	UNFI	1.000	pci/L	UJ		NA				NA		
TH-232		NA			*U	1.000	pci/L	U	*U	1.000	pci/L	U
TH-232	UNFI	1.000	pci/L	UJ		NA				NA		
TH-TOTAL		NA			*U	4.000	ug/L	U	*U	7.000	ug/L	U
TH-TOTAL	UNFI	3.000	ug/L	UJ		NA				NA		
U-234		NA			*U	1.000	pci/L	U	*U	1.000	pci/L	U
U-234	UNFI	1.000	pci/L	U		NA				NA		
U-235/236		NA			*U	1.000	pci/L	U	*U	1.000	pci/L	U
U-235/236	UNFI	1.000	pci/L	U		NA				NA		
U-238		NA			*U	1.000	pci/L	U	*U	1.000	pci/L	U
U-238	UNFI	1.000	pci/L	U		NA				NA		
U-TOTAL		NA			*U	1.000	ug/L	U	*U	1.000	ug/L	U
U-TOTAL	UNFI	1.000	ug/L	U		NA				NA		

000286

TABLE C-12A
(Continued)

PHASE I - RADIOLOGICAL PARAMETERS

BORING NUMBER	3037				3037				3037			
SAMPLE NUMBER	003916				003152				066462			
SAMPLING DATE	02/22/89				05/05/88				06/28/89			
RADIOLOGICAL PARAMETERS	FLTD	RESULTS	UNITS	VQ	FLTD	RESULTS	UNITS	VQ	FLTD	RESULTS	UNITS	VQ
CS-137	*U	20.000	pci/L	R	*U	20.000	pci/L	R		NA		
NP-237	*U	1.000	pci/L	U	*U	1.000	pci/L	UJ		NA		
PU-238	*U	1.000	pci/L	U	*U	1.000	pci/L	U		NA		
PU-239/240	*U	1.000	pci/L	U	*U	1.000	pci/L	U		NA		
RA-226	*U	1.000	pci/L	UJ	*U	1.000	pci/L	U		NA		
RA-228	*U	3.000	pci/L	UJ	*U	3.000	pci/L	U		NA		
RU-106	*U	150.000	pci/L	R	*U	150.000	pci/L	R		NA		
SR-90	*U	5.000	pci/L	U	*U	5.000	pci/L	U		NA		
TC-99	*U	30.000	pci/L	UJ	*U	30.000	pci/L	U		NA		
TC-99		NA				NA			UNKN	30.000	pci/L	UJ
TH-228	*U	1.000	pci/L	U	*U	1.000	pci/L	U		NA		
TH-228		NA				NA			UNKN	1.000	pci/L	UJ
TH-230	*U	1.000	pci/L	U	*U	1.000	pci/L	J		NA		
TH-230		NA				NA			UNKN	1.000	pci/L	UJ
TH-232	*U	1.000	pci/L	U	*U	1.000	pci/L	U		NA		
TH-TOTAL	*U	5.000	ug/L	U		NA				NA		
U-234	*U	1.000	pci/L	U	*U	3.700	pci/L	-		NA		
U-234		NA				NA			UNKN	1.000	pci/L	UJ
U-235/236	*U	1.000	pci/L	U	*U	1.000	pci/L	U		NA		
U-235/236		NA				NA			UNKN	1.000	pci/L	UJ
U-238	*U	1.800	pci/L	-	*U	13.000	pci/L	-		NA		
U-238		NA				NA			UNKN	1.000	pci/L	UJ
U-TOTAL	*U	6.000	ug/L	-	*U	35.000	ug/L	R		NA		
U-TOTAL		NA				NA			UNKN	1.000	ug/L	-

TABLE C-12A
(Continued)

PHASE I - RADIOLOGICAL PARAMETERS

BORING NUMBER	3037				3037				3037			
SAMPLE NUMBER	003447				066541				003717			
SAMPLING DATE	08/08/88				08/25/89				11/18/88			
RADIOLOGICAL PARAMETERS	FLTD	RESULTS	UNITS	VQ	FLTD	RESULTS	UNITS	VQ	FLTD	RESULTS	UNITS	VQ
CS-137	*F	20.000	pci/L	R		NA				NA		
CS-137	*U	20.000	pci/L	R		NA			*U	20.000	pci/L	R
NP-237	*F	1.000	pci/L	R		NA				NA		
NP-237	*U	1.000	pci/L	UJ		NA			*U	1.000	pci/L	U
PU-238	*F	1.000	pci/L	R		NA				NA		
PU-238	*U	1.000	pci/L	U		NA			*U	1.000	pci/L	U
PU-239/240	*F	1.000	pci/L	R		NA				NA		
PU-239/240	*U	1.000	pci/L	U		NA			*U	1.000	pci/L	U
RA-226	*F	1.000	pci/L	U		NA				NA		
RA-226	*U	1.000	pci/L	R		NA			*U	1.000	pci/L	U
RA-228	*F	3.000	pci/L	U		NA				NA		
RA-228	*U	3.000	pci/L	U		NA			*U	3.000	pci/L	U
RU-106	*F	150.000	pci/L	R		NA				NA		
RU-106	*U	150.000	pci/L	R		NA			*U	150.000	pci/L	R
SR-90	*F	5.000	pci/L	U		NA				NA		
SR-90	*U	5.000	pci/L	U		NA			*U	5.000	pci/L	U
TC-99	*F	30.000	pci/L	UJ		NA				NA		
TC-99	*U	30.000	pci/L	UJ		NA			*U	30.000	pci/L	U
TC-99		NA			UNKN	30.000	pci/L	U		NA		
TH-228	*F	1.000	pci/L	UJ		NA				NA		
TH-228	*U	1.000	pci/L	U		NA			*U	1.000	pci/L	U
TH-228		NA			UNKN	1.000	pci/L	U		NA		
TH-230	*F	1.000	pci/L	UJ		NA				NA		
TH-230	*U	1.000	pci/L	U		NA			*U	1.000	pci/L	U
TH-230		NA			UNKN	1.000	pci/L	U		NA		
TH-232	*F	1.000	pci/L	UJ		NA				NA		
TH-232	*U	1.000	pci/L	U		NA			*U	1.000	pci/L	U
TH-TOTAL	*F	4.000	ug/L	UJ		NA				NA		
TH-TOTAL	*U	6.000	ug/L	UJ		NA			*U	7.000	ug/L	D
U-234	*F	2.100	pci/L	-		NA				NA		
U-234	*U	1.400	pci/L	J		NA			*U	1.000	pci/L	U
U-234		NA			UNKN	1.000	pci/L	U		NA		
U-235/236	*F	1.000	pci/L	U		NA				NA		
U-235/236	*U	1.000	pci/L	U		NA			*U	1.000	pci/L	U
U-235/236		NA			UNKN	1.000	pci/L	U		NA		
U-238	*F	5.700	pci/L	-		NA				NA		
U-238	*U	1.000	pci/L	U		NA			*U	1.000	pci/L	U
U-238		NA			UNKN	1.000	pci/L	U		NA		
U-TOTAL	*F	15.000	ug/L	-		NA				NA		
U-TOTAL	*U	1.000	ug/L	U		NA			*U	1.000	ug/L	-
U-TOTAL		NA			UNKN	2.000	ug/L	-		NA		

6508

TABLE C-12A
(Continued)

PHASE I - RADIOLOGICAL PARAMETERS

BORING NUMBER		3037		
SAMPLE NUMBER		066712		
SAMPLING DATE		11/19/89		
RADIOLOGICAL PARAMETERS	FLTD	RESULTS	UNITS	VQ
TC-99	UNKN	30.000	pci/L	UJ
TH-228	UNKN	1.000	pci/L	U
TH-230	UNKN	1.000	pci/L	UJ
U-234	UNKN	1.030	pci/L	-
U-235	UNKN	1.000	pci/L	U
U-238	UNKN	1.000	pci/L	U
U-TOTAL	UNKN	2.000	ug/L	J

TABLE C-12A
(Continued)

PHASE I - CHEMICAL PARAMETERS

BORING NUMBER	1035					1035					1035			
SAMPLE NUMBER	003245					003560					003736			
SAMPLING DATE	05/25/88					08/11/88					11/15/88			
CHEMICAL PARAMETERS	FLTD	RESULTS	UNITS	L	VQ	FLTD	RESULTS	UNITS	L	VQ	FLTD	RESULTS	UNITS	L	VQ
Inorganics															
Arsenic		NA				*F	0.350	mg/L	C	-		NA			
Arsenic	FILT	0.200	mg/L	C	U		NA				FILT	0.002	mg/L	C	U
Barium		NA				*F	0.090	mg/L	C	-		NA			
Barium	FILT	0.125	mg/L	C	-		NA				FILT	0.093	mg/L	C	-
Cadmium		NA				*F	0.002	mg/L	C	U		NA			
Cadmium	FILT	0.005	mg/L	C	U		NA				FILT	0.002	mg/L	C	U
Calcium		NA				*F	83.900	mg/L	C	-		NA			
Calcium	FILT	81.700	mg/L	C	-		NA				FILT	90.400	mg/L	C	-
Chromium		NA				*F	0.020	mg/L	C	U		NA			
Chromium	FILT	0.020	mg/L	C	U		NA				FILT	0.020	mg/L	C	U
Copper		NA				*F	0.010	mg/L	C	U		NA			
Copper	FILT	0.010	mg/L	C	U		NA				FILT	0.010	mg/L	C	U
Iron		NA				*F	0.024	mg/L	C	-		NA			
Iron	FILT	0.060	mg/L	C	U		NA				FILT	0.009	mg/L	C	J
Lead		NA				*F	0.050	mg/L	C	U		NA			
Lead	FILT	0.050	mg/L	C	UJ		NA				FILT	0.005	mg/L	C	J
Magnesium		NA				*F	29.900	mg/L	C	-		NA			
Magnesium	FILT	31.700	mg/L	C	-		NA				FILT	30.800	mg/L	C	-
Manganese		NA				*F	0.044	mg/L	C	-		NA			
Manganese	FILT	0.379	mg/L	C	-		NA				FILT	0.028	mg/L	C	-
Mercury		NA				*F	0.000	mg/L	C	UJ		NA			
Mercury	FILT	0.000	mg/L	C	U		NA				FILT	0.000	mg/L	C	U
Molybdenum		NA				*F	0.020	mg/L	C	U		NA			
Molybdenum	FILT	0.029	mg/L	C	-		NA				FILT	0.020	mg/L	C	U
Nickel		NA				*F	0.020	mg/L	C	U		NA			
Nickel	FILT	0.020	mg/L	C	U		NA				FILT	0.020	mg/L	C	U
Potassium		NA				*F	0.958	mg/L	C	-		NA			
Potassium	FILT	1.920	mg/L	C	-		NA				FILT	1.130	mg/L	C	-
Selenium		NA				*F	0.200	mg/L	C	U		NA			
Selenium	FILT	0.200	mg/L	C	U		NA				FILT	0.002	mg/L	C	UJ
Silver		NA				*F	0.010	mg/L	C	U		NA			
Silver	FILT	0.010	mg/L	C	U		NA				FILT	0.010	mg/L	C	U
Sodium		NA				*F	6.820	mg/L	C	J		NA			
Sodium	FILT	8.610	mg/L	C	-		NA				FILT	6.800	mg/L	C	-
General Chemistry															
Ammonia	UNFI	0.300	mg/L	D	-	UNFI	0.100	mg/L	C	UJ	UNFI	0.100	mg/L	C	UJ
Chloride	UNFI	3.000	mg/L	D	NV	UNFI	3.000	mg/L	C	J	UNFI	10.500	mg/L	C	J
Fluoride	UNFI	0.620	mg/L	D	NV	UNFI	0.510	mg/L	C	J	UNFI	0.540	mg/L	C	-
Nitrate	UNFI	0.200	mg/L	D	NV	UNFI	0.100	mg/L	C	R	UNFI	0.296	mg/L	C	J
Phenols	UNFI	0.010	mg/L	D	NV	UNFI	0.020	mg/L	C	J	UNFI	0.010	mg/L	C	UJ

000290

TABLE C-12A
(Continued)

PHASE I - CHEMICAL PARAMETERS

BORING NUMBER		1035				1035				1035			
SAMPLE NUMBER		003245				003560				003736			
SAMPLING DATE		05/25/88				08/11/88				11/15/88			
CHEMICAL PARAMETERS	FLTD	RESULTS	UNITS	L	VQ	FLTD	RESULTS	UNITS	L	VQ	FLTD	RESULTS	UNITS	L	VQ
General Chemistry															
Phosphorus	UNFI	4.900	mg/L	D	-	UNFI	3.550	mg/L	C	J	UNFI	0.022	mg/L	C	-
Sulfate	UNFI	45.000	mg/L	D	NV	UNFI	59.000	mg/L	C	J	UNFI	50.300	mg/L	C	-
Total Kjeldahl Nitrogen		NA					NA				UNFI	0.420	mg/L	C	J
Total Organic Halides		NA					NA				UNKN	0.050	mg/L	C	U
Total Organic Nitrogen	UNFI	4.600	mg/L	D	-	UNFI	0.100	mg/L	C	J	UNFI	0.420	mg/L	C	J

TABLE C-12A
(Continued)

PHASE I - CHEMICAL PARAMETERS

BORING NUMBER	1035					1038					1038				
SAMPLE NUMBER	003931					003183					003518				
SAMPLING DATE	02/05/89					05/11/88					08/22/88				
CHEMICAL PARAMETERS	FLTD	RESULTS	UNITS	L	VQ	FLTD	RESULTS	UNITS	L	VQ	FLTD	RESULTS	UNITS	L	VQ
Inorganics															
Arsenic		NA					NA				*F	0.002	mg/L	C	U
Arsenic	FILT	0.002	mg/L	C	U	FILT	0.200	mg/L	C	U		NA			
Barium		NA					NA				*F	0.045	mg/L	C	-
Barium	FILT	0.097	mg/L	C	-	FILT	0.050	mg/L	C	U		NA			
Cadmium		NA					NA				*F	0.002	mg/L	C	U
Cadmium	FILT	0.007	mg/L	C	-	FILT	0.013	mg/L	C	-		NA			
Calcium		NA					NA				*F	133.000	mg/L	C	-
Calcium	FILT	92.000	mg/L	C	-	FILT	135.000	mg/L	C	-		NA			
Chromium		NA					NA				*F	0.020	mg/L	C	U
Chromium	FILT	0.023	mg/L	C	-	FILT	0.020	mg/L	C	U		NA			
Copper		NA					NA				*F	0.010	mg/L	C	U
Copper	FILT	0.011	mg/L	C	-	FILT	0.010	mg/L	C	U		NA			
Iron		NA					NA				*F	0.160	mg/L	C	-
Iron	FILT	0.048	mg/L	C	-	FILT	0.530	mg/L	C	-		NA			
Lead		NA					NA				*F	0.002	mg/L	C	UJ
Lead	FILT	0.002	mg/L	C	UJ	FILT	0.050	mg/L	C	U		NA			
Magnesium		NA					NA				*F	60.600	mg/L	C	-
Magnesium	FILT	35.500	mg/L	C	-	FILT	60.900	mg/L	C	-		NA			
Manganese		NA					NA				*F	0.204	mg/L	C	-
Manganese	FILT	0.036	mg/L	C	-	FILT	0.286	mg/L	C	-		NA			
Mercury		NA					NA				*F	0.000	mg/L	C	UJ
Mercury	FILT	0.000	mg/L	C	U	FILT	0.000	mg/L	C	UJ		NA			
Molybdenum		NA					NA				*F	0.043	mg/L	C	U
Molybdenum	FILT	0.020	mg/L	C	U	FILT	0.027	mg/L	C	U		NA			
Nickel		NA					NA				*F	0.020	mg/L	C	U
Nickel	FILT	0.020	mg/L	C	U	FILT	0.020	mg/L	C	U		NA			
Potassium		NA					NA				*F	2.400	mg/L	C	-
Potassium	FILT	1.260	mg/L	C	J	FILT	1.920	mg/L	C	-		NA			
Selenium		NA					NA				*F	0.002	mg/L	C	UJ
Selenium	FILT	0.002	mg/L	C	UJ	FILT	0.200	mg/L	C	U		NA			
Silver		NA					NA				*F	0.010	mg/L	C	U
Silver	FILT	0.001	mg/L	C	U	FILT	0.010	mg/L	C	U		NA			
Sodium		NA					NA				*F	8.300	mg/L	C	-
Sodium	FILT	8.510	mg/L	C	-	FILT	8.700	mg/L	C	-		NA			
General Chemistry															
Ammonia	UNFI	0.100	mg/L	C	U	UNFI	0.200	mg/L	C	J	UNFI	0.200	mg/L	C	J
Chloride	UNFI	2.000	mg/L	C	U	UNFI	14.900	mg/L	C	-	UNFI	10.000	mg/L	C	-
Fluoride	UNFI	0.360	mg/L	C	J	UNFI	0.760	mg/L	C	J	UNFI	0.750	mg/L	C	J
Nitrate	UNFI	0.580	mg/L	C	J	UNFI	0.100	mg/L	C	R	UNFI	0.100	mg/L	C	UJ
Phenols	UNFI	0.010	mg/L	C	UJ	UNFI	0.020	mg/L	C	J	UNFI	0.020	mg/L	C	-

000292

TABLE C-12A
(Continued)

PHASE I - CHEMICAL PARAMETERS

BORING NUMBER		1035					1038					1038			
SAMPLE NUMBER		003931					003183					003518			
SAMPLING DATE		02/05/89					05/11/88					08/22/88			
CHEMICAL PARAMETERS	FLTD	RESULTS	UNITS	L	VQ	FLTD	RESULTS	UNITS	L	VQ	FLTD	RESULTS	UNITS	L	VQ
General Chemistry															
Phosphorus	UNFI	0.070	mg/L	C	J	UNFI	0.050	mg/L	C	UJ	UNFI	0.625	mg/L	C	J
Sulfate	UNFI	52.400	mg/L	C	-	UNFI	200.000	mg/L	C	J	UNFI	132.000	mg/L	C	J
Total Kjeldahl Nitrogen	UNFI	0.160	mg/L	C	J		NA					NA			
Total Organic Halides	UNFI	0.050	mg/L	C	U		NA				UNFI	0.050	mg/L	C	U
Total Organic Nitrogen		NA				UNFI	0.100	mg/L	C	UJ	UNFI	0.100	mg/L	C	J
Total Organic Nitrogen	UNKN	0.160	mg/L	C	J		NA					NA			

TABLE C-12A
(Continued)

PHASE I - CHEMICAL PARAMETERS

BORING NUMBER		1038					1038					1038			
SAMPLE NUMBER		003762					003947					066431			
SAMPLING DATE		11/20/88					02/05/89					06/18/89			
CHEMICAL PARAMETERS	FLTD	RESULTS	UNITS	L	VQ	FLTD	RESULTS	UNITS	L	VQ	FLTD	RESULTS	UNITS	L	VQ
Inorganics															
Aluminum		NA					NA				UNKN	0.168	mg/L	C	-
Arsenic	FILT	0.002	mg/L	C	UJ	FILT	0.002	mg/L	C	U		NA			
Barium	FILT	0.040	mg/L	C	-	FILT	0.050	mg/L	C	-		NA			
Barium		NA					NA				UNKN	0.043	mg/L	C	-
Beryllium		NA					NA				UNKN	0.001	mg/L	C	U
Cadmium	FILT	0.002	mg/L	C	U	FILT	0.010	mg/L	C	-		NA			
Calcium	FILT	126.000	mg/L	C	-	FILT	147.000	mg/L	C	-		NA			
Calcium		NA					NA				UNKN	145.000	mg/L	C	-
Chromium	FILT	0.020	mg/L	C	U	FILT	0.036	mg/L	C	-		NA			
Chromium		NA					NA				UNKN	0.039	mg/L	C	-
Cobalt		NA					NA				UNKN	0.010	mg/L	C	U
Copper	FILT	0.010	mg/L	C	U	FILT	0.016	mg/L	C	-		NA			
Copper		NA					NA				UNKN	0.010	mg/L	C	U
Iron	FILT	0.376	mg/L	C	J	FILT	0.140	mg/L	C	-		NA			
Iron		NA					NA				UNKN	0.156	mg/L	C	-
Lead	FILT	0.002	mg/L	C	U	FILT	0.002	mg/L	C	UJ		NA			
Lead		NA					NA				UNKN	0.002	mg/L	C	U
Magnesium	FILT	56.000	mg/L	C	-	FILT	66.300	mg/L	C	-		NA			
Magnesium		NA					NA				UNKN	65.400	mg/L	C	-
Manganese	FILT	0.210	mg/L	C	-	FILT	0.217	mg/L	C	-		NA			
Mercury	FILT	0.000	mg/L	C	U	FILT	0.001	mg/L	C	-		NA			
Molybdenum	FILT	0.036	mg/L	C	-	FILT	0.020	mg/L	C	U		NA			
Nickel	FILT	0.020	mg/L	C	U	FILT	0.029	mg/L	C	-		NA			
Nickel		NA					NA				UNKN	0.023	mg/L	C	-
Potassium	FILT	1.730	mg/L	C	-	FILT	1.900	mg/L	C	J		NA			
Selenium	FILT	0.002	mg/L	C	UJ	FILT	0.002	mg/L	C	UJ		NA			
Silver	FILT	0.001	mg/L	C	U	FILT	0.001	mg/L	C	U		NA			
Silver		NA					NA				UNKN	0.014	mg/L	C	-
Sodium	FILT	7.110	mg/L	C	-	FILT	8.660	mg/L	C	-		NA			
Vanadium		NA					NA				UNKN	0.028	mg/L	C	-
Zinc		NA					NA				UNKN	0.012	mg/L	C	-
Volatile Organics															
1,1-Dichloroethane		NA					NA				UNFI	5.000	ug/L	C	U
Acetone		NA					NA				UNFI	10.000	ug/L	C	U
Methylene chloride		NA					NA				UNFI	7.000	ug/L	C	U
Tetrachloroethene		NA					NA				UNFI	5.000	ug/L	C	U
Toluene		NA					NA				UNFI	5.000	ug/L	C	U
Trichloroethene		NA					NA				UNFI	5.000	ug/L	C	U
General Chemistry															
Ammonia	UNFI	0.160	mg/L	C	J	UNFI	0.100	mg/L	C	U		NA			

000284

TABLE C-12A
(Continued)

PHASE I - CHEMICAL PARAMETERS

BORING NUMBER	1038					1038					1038				
SAMPLE NUMBER	003762					003947					066431				
SAMPLING DATE	11/20/88					02/05/89					06/18/89				
CHEMICAL PARAMETERS	FLTD	RESULTS	UNITS	L	VQ	FLTD	RESULTS	UNITS	L	VQ	FLTD	RESULTS	UNITS	L	VQ
General Chemistry															
Chloride	UNFI	2.000	mg/L	C	-	UNFI	17.500	mg/L	C	-	UNFI	5.800	mg/L	C	-
Fluoride	UNFI	0.640	mg/L	C	-	UNFI	0.460	mg/L	C	J	UNFI	0.600	mg/L	C	-
Nitrate	UNFI	0.100	mg/L	C	U	UNFI	0.100	mg/L	C	J	UNFI	0.100	mg/L	C	R
Phenols	UNFI	0.010	mg/L	C	U	UNFI	0.010	mg/L	C	UJ		NA			
Phosphorus	UNFI	2.760	mg/L	C	-	UNFI	0.270	mg/L	C	J		NA			
Sulfate	UNFI	132.000	mg/L	C	-	UNFI	183.000	mg/L	C	-	UNFI	158.000	mg/L	C	-
Total Kjeldahl Nitrogen	UNFI	0.100	mg/L	C	UJ	UNFI	0.223	mg/L	C	J		NA			
Total Organic Carbon		NA					NA				UNFI	1.960	mg/L	C	UJ
Total Organic Halides	UNFI	0.050	mg/L	C	U	UNFI	0.050	mg/L	C	U	UNFI	0.010	mg/L	C	J
Total Organic Nitrogen		NA				UNFI	0.223	mg/L	C	J		NA			

TABLE C-12A
(Continued)

PHASE I - CHEMICAL PARAMETERS

BORING NUMBER	1038					1719					2027				
SAMPLE NUMBER	066495					047006					003168				
SAMPLING DATE	08/13/89					06/09/92					05/09/88				
CHEMICAL PARAMETERS	FLTD	RESULTS	UNITS	L	VQ	FLTD	RESULTS	UNITS	L	VQ	FLTD	RESULTS	UNITS	L	VQ
Inorganics															
Aluminum		NA					NA				*F	0.011	mg/L	C	U
Aluminum	UNKN	0.149	mg/L	C	-	UNKN	0.030	mg/L	D	U		NA			
Antimony		NA					NA				*F	0.047	mg/L	C	U
Antimony		NA				UNKN	0.030	mg/L	D	UJ		NA			
Arsenic		NA					NA				*F	0.002	mg/L	C	U
Arsenic		NA				UNKN	0.050	mg/L	D	UJ		NA			
Barium		NA					NA				*F	0.105	mg/L	C	-
Barium	UNKN	0.048	mg/L	C	-	UNKN	0.116	mg/L	D	-		NA			
Beryllium		NA					NA				*F	0.002	mg/L	C	U
Beryllium	UNKN	0.001	mg/L	C	U	UNKN	0.002	mg/L	D	U		NA			
Cadmium		NA					NA				*F	0.001	mg/L	C	U
Cadmium		NA				UNKN	0.005	mg/L	D	UJ		NA			
Calcium		NA					NA				*F	274.000	mg/L	C	-
Calcium	UNKN	156.000	mg/L	C	-	UNKN	114.000	mg/L	D	-		NA			
Chromium		NA					NA				*F	0.002	mg/L	C	U
Chromium	UNKN	0.034	mg/L	C	-	UNKN	0.010	mg/L	D	U		NA			
Cobalt		NA					NA				*F	0.005	mg/L	C	U
Cobalt	UNKN	0.010	mg/L	C	U	UNKN	0.010	mg/L	D	U		NA			
Copper		NA					NA				*F	0.007	mg/L	C	U
Copper	UNKN	0.010	mg/L	C	U	UNKN	0.010	mg/L	D	U		NA			
Cyanide		NA					NA				UNKN	0.010	mg/L	C	U
Iron		NA					NA				*F	8.060	mg/L	C	-
Iron	UNKN	0.295	mg/L	C	-	UNKN	1.150	mg/L	D	-		NA			
Lead		NA					NA				*F	0.002	mg/L	C	U
Lead	UNKN	0.003	mg/L	C	-	UNKN	0.040	mg/L	D	UJ		NA			
Magnesium		NA					NA				*F	49.800	mg/L	C	-
Magnesium	UNKN	66.200	mg/L	C	-	UNKN	82.400	mg/L	D	-		NA			
Manganese		NA					NA				*F	0.461	mg/L	C	-
Manganese		NA				UNKN	0.238	mg/L	D	-		NA			
Mercury		NA					NA				*F	0.000	mg/L	C	UJ
Mercury		NA				UNKN	0.000	mg/L	D	U		NA			
Molybdenum		NA					NA				*F	0.033	mg/L	C	U
Molybdenum		NA				UNKN	0.038	mg/L	D	-		NA			
Nickel		NA					NA				*F	0.012	mg/L	C	U
Nickel	UNKN	0.020	mg/L	C	U	UNKN	0.133	mg/L	D	-		NA			
Potassium		NA					NA				*F	3.690	mg/L	C	-
Potassium		NA				UNKN	1.540	mg/L	D	-		NA			
Selenium		NA					NA				*F	0.002	mg/L	C	U
Selenium		NA				UNKN	0.080	mg/L	D	UJ		NA			
Silicon		NA				UNKN	7.550	mg/L	D	-		NA			
Silver		NA					NA				*F	0.004	mg/L	C	U
Silver	UNKN	0.014	mg/L	C	-	UNKN	0.010	mg/L	D	UJ		NA			

000296

TABLE C-12A
(Continued)

PHASE I - CHEMICAL PARAMETERS

BORING NUMBER	1038					1719					2027			
SAMPLE NUMBER	066495					047006					003168			
SAMPLING DATE	08/13/89					06/09/92					05/09/88			
CHEMICAL PARAMETERS	FLTD	RESULTS	UNITS	L	VQ	FLTD	RESULTS	UNITS	L	VQ	FLTD	RESULTS	UNITS	L	VQ
Inorganics															
Sodium		NA					NA				*F	30.600	mg/L	C	-
Sodium		NA				UNKN	37.500	mg/L	D	-		NA			
Thallium		NA					NA				*F	0.004	mg/L	C	UJ
Thallium		NA				UNKN	0.337	mg/L	D	J		NA			
Vanadium		NA					NA				*F	0.003	mg/L	C	U
Vanadium	UNKN	0.026	mg/L	C	-	UNKN	0.010	mg/L	D	U		NA			
Zinc		NA					NA				*F	0.228	mg/L	C	-
Zinc	UNKN	0.016	mg/L	C	-	UNKN	0.009	mg/L	D	-		NA			
Volatile Organics															
1,1,1-Trichloroethane		NA				UNFI	5.000	ug/L	D	U	UNFI	5.000	ug/L	C	UJ
1,1,2,2-Tetrachloroethane		NA				UNFI	5.000	ug/L	D	U	UNFI	5.000	ug/L	C	UJ
1,1,2-Trichloroethane		NA				UNFI	5.000	ug/L	D	U	UNFI	5.000	ug/L	C	UJ
1,1-Dichloroethane	UNFI	5.000	ug/L	C	U	UNFI	5.000	ug/L	D	U	UNFI	5.000	ug/L	C	UJ
1,1-Dichloroethene		NA				UNFI	5.000	ug/L	D	U	UNFI	5.000	ug/L	C	UJ
1,2-Dichloroethane		NA				UNFI	5.000	ug/L	D	U	UNFI	5.000	ug/L	C	UJ
1,2-Dichloroethene		NA				UNFI	5.000	ug/L	D	U	UNFI	5.000	ug/L	C	UJ
1,2-Dichloropropane		NA				UNFI	5.000	ug/L	D	U	UNFI	5.000	ug/L	C	UJ
2-Butanone		NA				UNFI	10.000	ug/L	D	U	UNFI	10.000	ug/L	C	UJ
2-Hexanone		NA				UNFI	10.000	ug/L	D	U	UNFI	10.000	ug/L	C	UJ
4-Methyl-2-pentanone		NA				UNFI	10.000	ug/L	D	U	UNFI	10.000	ug/L	C	UJ
Acetone	UNFI	10.000	ug/L	C	U	UNFI	10.000	ug/L	D	U	UNFI	10.000	ug/L	C	UJ
Benzene		NA				UNFI	5.000	ug/L	D	U	UNFI	5.000	ug/L	C	UJ
Bromodichloromethane		NA				UNFI	5.000	ug/L	D	U	UNFI	5.000	ug/L	C	UJ
Bromoform		NA				UNFI	5.000	ug/L	D	U	UNFI	5.000	ug/L	C	UJ
Bromomethane		NA				UNFI	10.000	ug/L	D	UJ	UNFI	10.000	ug/L	C	UJ
Carbon Tetrachloride		NA				UNFI	5.000	ug/L	D	U	UNFI	5.000	ug/L	C	UJ
Carbon disulfide		NA				UNFI	5.000	ug/L	D	U	UNFI	5.000	ug/L	C	UJ
Chlorobenzene		NA				UNFI	5.000	ug/L	D	U	UNFI	5.000	ug/L	C	UJ
Chloroethane		NA					NA				UNFI	10.000	ug/L	C	UJ
Chloroethane		NA				UNKN	10.000	ug/L	D	U		NA			
Chloroform		NA				UNFI	5.000	ug/L	D	U	UNFI	5.000	ug/L	C	UJ
Chloromethane		NA				UNFI	10.000	ug/L	D	U	UNFI	10.000	ug/L	C	UJ
Dibromochloromethane		NA				UNFI	5.000	ug/L	D	U	UNFI	5.000	ug/L	C	UJ
Ethylbenzene		NA				UNFI	5.000	ug/L	D	U	UNFI	5.000	ug/L	C	UJ
Methylene chloride	UNFI	5.000	ug/L	C	U	UNFI	5.000	ug/L	D	U	UNFI	5.000	ug/L	C	UJ
Styrene		NA				UNFI	5.000	ug/L	D	U	UNFI	5.000	ug/L	C	UJ
Tetrachloroethene	UNFI	5.000	ug/L	C	U	UNFI	5.000	ug/L	D	U	UNFI	5.000	ug/L	C	UJ
Toluene	UNFI	5.000	ug/L	C	UJ	UNFI	5.000	ug/L	D	U	UNFI	5.000	ug/L	C	UJ
Trichloroethene	UNFI	5.000	ug/L	C	U	UNFI	5.000	ug/L	D	U	UNFI	5.000	ug/L	C	UJ
Vinyl Acetate		NA					NA				UNFI	10.000	ug/L	C	UJ

TABLE C-12A
(Continued)

PHASE I - CHEMICAL PARAMETERS

BORING NUMBER	1038				1719				2027			
SAMPLE NUMBER	066495				047006				003168			
SAMPLING DATE	08/13/89				06/09/92				05/09/88			
CHEMICAL PARAMETERS	FLTD	RESULTS	UNITS	L VQ	FLTD	RESULTS	UNITS	L VQ	FLTD	RESULTS	UNITS	L VQ
Volatile Organics												
Vinyl Acetate		NA			UNKN	10.000	ug/L	D U		NA		
Vinyl chloride		NA			UNFI	10.000	ug/L	D U	UNFI	10.000	ug/L	C UJ
Xylenes, Total		NA			UNFI	5.000	ug/L	D U	UNFI	5.000	ug/L	C UJ
cis-1,3-Dichloropropene		NA			UNFI	5.000	ug/L	D U	UNFI	5.000	ug/L	C UJ
trans-1,3-Dichloropropene		NA			UNFI	5.000	ug/L	D U	UNFI	5.000	ug/L	C UJ
Semivolatile Organics												
1,2,4-Trichlorobenzene		NA				NA			UNKN	10.000	ug/L	C UJ
1,2-Dichlorobenzene		NA				NA			UNKN	10.000	ug/L	C UJ
1,3-Dichlorobenzene		NA				NA			UNKN	10.000	ug/L	C UJ
1,4-Dichlorobenzene		NA				NA			UNKN	10.000	ug/L	C UJ
2,4,5-Trichlorophenol		NA				NA			UNKN	50.000	ug/L	C UJ
2,4,6-Trichlorophenol		NA				NA			UNKN	10.000	ug/L	C UJ
2,4-Dichlorophenol		NA				NA			UNKN	10.000	ug/L	C UJ
2,4-Dimethylphenol		NA				NA			UNKN	10.000	ug/L	C UJ
2,4-Dinitrophenol		NA				NA			UNKN	50.000	ug/L	C UJ
2,4-Dinitrotoluene		NA				NA			UNKN	10.000	ug/L	C UJ
2,6-Dinitrotoluene		NA				NA			UNKN	10.000	ug/L	C UJ
2-Chloronaphthalene		NA				NA			UNKN	10.000	ug/L	C UJ
2-Chlorophenol		NA				NA			UNKN	10.000	ug/L	C UJ
2-Methylnaphthalene		NA				NA			UNKN	10.000	ug/L	C UJ
2-Methylphenol		NA				NA			UNKN	10.000	ug/L	C UJ
2-Nitroaniline		NA				NA			UNKN	50.000	ug/L	C UJ
2-Nitrophenol		NA				NA			UNKN	10.000	ug/L	C UJ
3,3'-Dichlorobenzidine		NA				NA			UNKN	20.000	ug/L	C UJ
3-Nitroaniline		NA				NA			UNKN	50.000	ug/L	C UJ
4,6-Dinitro-2-methylphenol		NA				NA			UNKN	50.000	ug/L	C UJ
4-Bromophenyl phenyl ether		NA				NA			UNKN	10.000	ug/L	C UJ
4-Chloro-3-methylphenol		NA				NA			UNKN	10.000	ug/L	C UJ
4-Chlorophenylphenyl ether		NA				NA			UNKN	10.000	ug/L	C UJ
4-Methylphenol		NA				NA			UNKN	10.000	ug/L	C UJ
4-Nitroaniline		NA				NA			UNKN	50.000	ug/L	C UJ
4-Nitrophenol		NA				NA			UNKN	50.000	ug/L	C UJ
Acenaphthene		NA				NA			UNKN	10.000	ug/L	C UJ
Acenaphthylene		NA				NA			UNKN	10.000	ug/L	C UJ
Anthracene		NA				NA			UNKN	10.000	ug/L	C UJ
Benzo(a)anthracene		NA				NA			UNKN	10.000	ug/L	C UJ
Benzo(a)pyrene		NA				NA			UNKN	10.000	ug/L	C UJ
Benzo(b)fluoranthene		NA				NA			UNKN	10.000	ug/L	C UJ
Benzo(g,h,i)perylene		NA				NA			UNKN	10.000	ug/L	C UJ
Benzo(k)fluoranthene		NA				NA			UNKN	10.000	ug/L	C UJ

000298

TABLE C-12A
(Continued)

PHASE I - CHEMICAL PARAMETERS

BORING NUMBER		1038				1719				2027			
SAMPLE NUMBER		066495				047006				003168			
SAMPLING DATE		08/13/89				06/09/92				05/09/88			
CHEMICAL PARAMETERS	FLTD	RESULTS	UNITS	L	VQ	FLTD	RESULTS	UNITS	L	VQ	FLTD	RESULTS	UNITS	L	VQ
Semivolatile Organics															
Benzoic acid		NA					NA				UNKN	50.000	ug/L	C	UJ
Benzyl alcohol		NA					NA				UNKN	10.000	ug/L	C	UJ
Butyl benzyl phthalate		NA					NA				UNKN	10.000	ug/L	C	UJ
Chrysene		NA					NA				UNKN	10.000	ug/L	C	UJ
Di-n-butyl phthalate		NA					NA				UNKN	10.000	ug/L	C	UJ
Di-n-octyl phthalate		NA					NA				UNKN	10.000	ug/L	C	UJ
Dibenzo(a,h)anthracene		NA					NA				UNKN	10.000	ug/L	C	UJ
Dibenzofuran		NA					NA				UNKN	10.000	ug/L	C	UJ
Diethyl phthalate		NA					NA				UNKN	10.000	ug/L	C	UJ
Dimethyl phthalate		NA					NA				UNKN	10.000	ug/L	C	UJ
Fluoranthene		NA					NA				UNKN	10.000	ug/L	C	UJ
Fluorene		NA					NA				UNKN	10.000	ug/L	C	UJ
Hexachlorobenzene		NA					NA				UNKN	10.000	ug/L	C	UJ
Hexachlorobutadiene		NA					NA				UNKN	10.000	ug/L	C	UJ
Hexachlorocyclopentadiene		NA					NA				UNKN	10.000	ug/L	C	UJ
Hexachloroethane		NA					NA				UNKN	10.000	ug/L	C	UJ
Indeno(1,2,3-cd)pyrene		NA					NA				UNKN	10.000	ug/L	C	UJ
Isophorone		NA					NA				UNKN	10.000	ug/L	C	UJ
Methyl parathion		NA					NA				UNFI	1.000	ug/L	C	UJ
N-Nitroso-di-n-propylamine		NA					NA				UNKN	10.000	ug/L	C	UJ
N-Nitrosodiphenylamine		NA					NA				UNKN	10.000	ug/L	C	UJ
Naphthalene		NA					NA				UNKN	10.000	ug/L	C	UJ
Nitrobenzene		NA					NA				UNKN	10.000	ug/L	C	UJ
Parathion		NA					NA				UNFI	0.500	ug/L	C	UJ
Pentachlorophenol		NA					NA				UNKN	50.000	ug/L	C	UJ
Phenanthrene		NA					NA				UNKN	10.000	ug/L	C	UJ
Phenol		NA					NA				UNKN	10.000	ug/L	C	UJ
Pyrene		NA					NA				UNKN	10.000	ug/L	C	UJ
bis(2-Chloroethoxy)methane		NA					NA				UNKN	10.000	ug/L	C	UJ
bis(2-Chloroethyl)ether		NA					NA				UNKN	10.000	ug/L	C	UJ
bis(2-Chloroisopropyl) ether		NA					NA				UNKN	10.000	ug/L	C	UJ
bis(2-Ethylhexyl) phthalate		NA					NA				UNKN	10.000	ug/L	C	UJ
p-Chloroaniline		NA					NA				UNKN	10.000	ug/L	C	UJ
Pesticide Organics/PCBs															
4,4'-DDD		NA					NA				UNFI	0.100	ug/L	C	UJ
4,4'-DDE		NA					NA				UNFI	0.100	ug/L	C	UJ
4,4'-DDT		NA					NA				UNFI	0.100	ug/L	C	UJ
Aldrin		NA					NA				UNFI	0.050	ug/L	C	UJ
Aroclor-1016		NA					NA				UNFI	0.500	ug/L	C	UJ
Aroclor-1221		NA					NA				UNFI	0.500	ug/L	C	UJ

TABLE C-12A
(Continued)

PHASE I - CHEMICAL PARAMETERS

BORING NUMBER		1038					1719					2027			
SAMPLE NUMBER		066495					047006					003168			
SAMPLING DATE		08/13/89					06/09/92					05/09/88			
CHEMICAL PARAMETERS	FLTD	RESULTS	UNITS	L	VQ	FLTD	RESULTS	UNITS	L	VQ	FLTD	RESULTS	UNITS	L	VQ
Pesticide Organics/PCBs															
Aroclor-1232		NA					NA				UNFI	0.500	ug/L	C	UJ
Aroclor-1242		NA					NA				UNFI	0.500	ug/L	C	UJ
Aroclor-1248		NA					NA				UNFI	0.500	ug/L	C	UJ
Aroclor-1254		NA					NA				UNFI	1.000	ug/L	C	UJ
Aroclor-1260		NA					NA				UNFI	1.000	ug/L	C	UJ
Azinphosmethyl		NA					NA				UNFI	5.000	ug/L	C	UJ
Demeton		NA					NA				UNFI	1.000	ug/L	C	UJ
Diazinon		NA					NA				UNFI	0.500	ug/L	C	UJ
Dieldrin		NA					NA				UNFI	0.100	ug/L	C	UJ
Disulfoton		NA					NA				UNFI	0.500	ug/L	C	UJ
Endosulfan II		NA					NA				UNFI	0.100	ug/L	C	UJ
Endosulfan sulfate		NA					NA				UNFI	0.500	ug/L	C	UJ
Endosulfan-I		NA					NA				UNFI	0.050	ug/L	C	UJ
Endrin		NA					NA				UNFI	0.100	ug/L	C	UJ
Endrin ketone		NA					NA				UNFI	0.500	ug/L	C	UJ
Ethion		NA					NA				UNFI	0.500	ug/L	C	UJ
Heptachlor		NA					NA				UNFI	0.050	ug/L	C	UJ
Heptachlor epoxide		NA					NA				UNFI	0.050	ug/L	C	UJ
Malathion		NA					NA				UNFI	1.000	ug/L	C	UJ
Methoxychlor		NA					NA				UNFI	0.500	ug/L	C	UJ
Toxaphene		NA					NA				UNFI	0.500	ug/L	C	UJ
alpha-BHC		NA					NA				UNFI	0.050	ug/L	C	UJ
alpha-Chlordane		NA					NA				UNFI	1.000	ug/L	C	UJ
beta-BHC		NA					NA				UNFI	0.050	ug/L	C	UJ
delta-BHC		NA					NA				UNFI	0.050	ug/L	C	UJ
gamma-BHC (Lindane)		NA					NA				UNFI	0.050	ug/L	C	UJ
gamma-Chlordane		NA					NA				UNFI	0.500	ug/L	C	UJ
General Chemistry															
Alkalinity as CaCO3		NA				UNFI	535.000	mg/L	C	J		NA			
Ammonia		NA				UNFI	0.300	mg/L	C	-	UNFI	0.100	mg/L	C	J
Chloride	UNFI	11.000	mg/L	C	-	UNFI	25.200	mg/L	C	J	UNFI	79.900	mg/L	C	-
Fluoride	UNFI	0.500	mg/L	C	-	UNFI	0.560	mg/L	C	J	UNFI	0.300	mg/L	C	-
Nitrate	UNFI	0.250	mg/L	C	-		NA				UNFI	0.100	mg/L	C	U
Nitrate/nitrite		NA				UNFI	0.100	mg/L	C	U		NA			
Phenols		NA				UNFI	0.010	mg/L	C	U	UNFI	0.010	mg/L	C	U
Phosphorus		NA				UNFI	0.050	mg/L	C	-	UNFI	0.575	mg/L	C	-
Sulfate	UNFI	155.000	mg/L	C	J	UNFI	296.200	mg/L	C	J	UNFI	645.000	mg/L	C	-
Sulfide		NA				UNFI	0.500	mg/L	C	U		NA			
Total Organic Carbon	UNFI	1.000	mg/L	C	U	UNFI	7.340	mg/L	C	-		NA			
Total Organic Halides	UNFI	0.011	mg/L	C	-	UNFI	0.061	mg/L	C	-		NA			

TABLE C-12A
(Continued)

PHASE I - CHEMICAL PARAMETERS

BORING NUMBER		1038				1719				2027			
SAMPLE NUMBER		066495				047006				003168			
SAMPLING DATE		08/13/89				06/09/92				05/09/88			
CHEMICAL PARAMETERS	FLTD	RESULTS	UNITS	L	VQ	FLTD	RESULTS	UNITS	L	VQ	FLTD	RESULTS	UNITS	L	VQ
General Chemistry															
Total Organic Nitrogen		NA				UNFI	0.100	mg/L	C	UJ	UNFI	0.100	mg/L	C	U
pH		NA				UNFI	7.290	stand	C	-		NA			

TABLE C-12A
(Continued)

PHASE I - CHEMICAL PARAMETERS

BORING NUMBER	2027					2027					2027				
SAMPLE NUMBER	003453					003731					003941				
SAMPLING DATE	08/10/88					12/01/88					03/08/89				
CHEMICAL PARAMETERS	FLTD	RESULTS	UNITS	L	VQ	FLTD	RESULTS	UNITS	L	VQ	FLTD	RESULTS	UNITS	L	VQ
Inorganics															
Arsenic	*F	0.010	mg/L	C	U		NA					NA			
Arsenic		NA				FILT	0.002	mg/L	C	R	FILT	0.003	mg/L	C	UJ
Barium	*F	0.200	mg/L	C	U		NA					NA			
Barium		NA				FILT	0.059	mg/L	C	-	FILT	0.082	mg/L	C	J
Cadmium	*F	0.005	mg/L	C	U		NA					NA			
Cadmium		NA				FILT	0.002	mg/L	C	U	FILT	0.005	mg/L	C	UJ
Calcium	*F	210.000	mg/L	C	-		NA					NA			
Calcium		NA				FILT	106.000	mg/L	C	-	FILT	210.000	mg/L	C	J
Chromium	*F	0.010	mg/L	C	U		NA					NA			
Chromium		NA				FILT	0.020	mg/L	C	U	FILT	0.030	mg/L	C	J
Copper	*F	0.030	mg/L	C	U		NA					NA			
Copper		NA				FILT	0.010	mg/L	C	U	FILT	0.010	mg/L	C	UJ
Iron	*F	6.100	mg/L	C	-		NA					NA			
Iron		NA				FILT	3.280	mg/L	C	-	FILT	4.700	mg/L	C	J
Lead	*F	0.005	mg/L	C	U		NA					NA			
Lead		NA				FILT	0.002	mg/L	C	R	FILT	0.002	mg/L	C	UJ
Magnesium	*F	44.000	mg/L	C	-		NA					NA			
Magnesium		NA				FILT	27.300	mg/L	C	-	FILT	44.000	mg/L	C	J
Manganese	*F	0.490	mg/L	C	-		NA					NA			
Manganese		NA				FILT	0.613	mg/L	C	-	FILT	0.480	mg/L	C	J
Mercury	*F	0.000	mg/L	C	U		NA					NA			
Mercury		NA				FILT	0.000	mg/L	C	U	FILT	0.000	mg/L	C	UJ
Molybdenum	*F	0.050	mg/L	C	U		NA					NA			
Molybdenum		NA				FILT	0.026	mg/L	C	-	FILT	0.010	mg/L	C	J
Nickel	*F	0.040	mg/L	C	U		NA					NA			
Nickel		NA				FILT	0.020	mg/L	C	U	FILT	0.030	mg/L	C	UJ
Potassium	*F	5.000	mg/L	C	U		NA					NA			
Potassium		NA				FILT	2.490	mg/L	C	-	FILT	6.400	mg/L	C	J
Selenium	*F	0.005	mg/L	C	U		NA					NA			
Selenium		NA				FILT	0.002	mg/L	C	R	FILT	0.002	mg/L	C	UJ
Silver	*F	0.010	mg/L	C	U		NA					NA			
Silver		NA				FILT	0.001	mg/L	C	U	FILT	0.010	mg/L	C	UJ
Sodium	*F	34.000	mg/L	C	-		NA					NA			
Sodium		NA				FILT	10.900	mg/L	C	-	FILT	29.000	mg/L	C	J
General Chemistry															
Ammonia	UNFI	0.500	mg/L	C	-	UNFI	0.643	mg/L	C	-	UNFI	0.600	mg/L	C	J
Chloride	UNFI	120.000	mg/L	C	-	UNFI	75.000	mg/L	C	-	UNFI	79.000	mg/L	C	J
Fluoride	UNFI	1.800	mg/L	C	-	UNFI	0.170	mg/L	C	-	UNFI	0.200	mg/L	C	J
Nitrate	UNFI	0.110	mg/L	C	J	UNFI	0.100	mg/L	C	UJ	UNFI	0.020	mg/L	C	UJ
Phenols	UNFI	0.050	mg/L	C	U	UNFI	0.010	mg/L	C	U	UNFI	0.034	mg/L	C	J

000302

TABLE C-12A
(Continued)

PHASE I - CHEMICAL PARAMETERS

BORING NUMBER		2027				2027				2027			
SAMPLE NUMBER		003453				003731				003941			
SAMPLING DATE		08/10/88				12/01/88				03/08/89			
CHEMICAL PARAMETERS	FLTD	RESULTS	UNITS	L	VQ	FLTD	RESULTS	UNITS	L	VQ	FLTD	RESULTS	UNITS	L	VQ
General Chemistry															
Phosphorus		NA				UNFI	26.400	mg/L	C	-	UNFI	0.020	mg/L	C	J
Sulfate	UNFI	300.000	mg/L	C	-	UNFI	158.000	mg/L	C	-	UNFI	250.000	mg/L	C	J
Total Kjeldahl Nitrogen	UNFI	15.000	mg/L	C	U	UNFI	5.000	mg/L	C	-	UNFI	1.600	mg/L	C	J
Total Organic Halides		NA				UNFI	0.050	mg/L	C	U	UNFI	0.050	mg/L	C	UJ
Total Organic Nitrogen		NA				UNFI	4.360	mg/L	C	-	UNFI	1.000	mg/L	C	J

TABLE C-12A
(Continued)

PHASE I - CHEMICAL PARAMETERS

BORING NUMBER	2027					2027					2027				
SAMPLE NUMBER	066447					066580					066599				
SAMPLING DATE	06/27/89					09/10/89					09/10/89				
CHEMICAL PARAMETERS	FLTD	RESULTS	UNITS	L	VQ	FLTD	RESULTS	UNITS	L	VQ	FLTD	RESULTS	UNITS	L	VQ
Inorganics															
Aluminum	UNKN	0.206	mg/L	C	J		NA				UNKN	0.275	mg/L	C	-
Antimony		NA					NA				UNKN	0.030	mg/L	C	U
Arsenic		NA					NA				UNKN	0.002	mg/L	C	U
Barium	UNKN	0.082	mg/L	C	J		NA				UNKN	0.054	mg/L	C	J
Beryllium	UNKN	0.001	mg/L	C	UJ		NA				UNKN	0.002	mg/L	C	J
Cadmium		NA					NA				UNKN	0.010	mg/L	C	-
Calcium	UNKN	333.000	mg/L	C	J		NA				UNKN	449.000	mg/L	C	-
Chromium	UNKN	0.053	mg/L	C	J		NA				UNKN	0.038	mg/L	C	-
Cobalt	UNKN	0.010	mg/L	C	UJ		NA				UNKN	0.013	mg/L	C	J
Copper	UNKN	0.010	mg/L	C	UJ		NA				UNKN	0.010	mg/L	C	U
Cyanide		NA					NA				UNKN	0.005	mg/L	C	U
Iron	UNKN	5.804	mg/L	C	J		NA				UNKN	3.270	mg/L	C	-
Lead	UNKN	0.002	mg/L	C	UJ		NA				UNKN	0.002	mg/L	C	UJ
Magnesium	UNKN	68.200	mg/L	C	J		NA				UNKN	72.200	mg/L	C	-
Manganese		NA					NA				UNKN	1.940	mg/L	C	-
Mercury		NA					NA				UNKN	0.000	mg/L	C	UJ
Nickel	UNKN	0.026	mg/L	C	J		NA				UNKN	0.037	mg/L	C	J
Osmium		NA					NA				UNKN	0.050	mg/L	C	U
Potassium		NA					NA				UNKN	4.200	mg/L	C	J
Selenium		NA					NA				UNKN	0.002	mg/L	C	UJ
Silver	UNKN	0.019	mg/L	C	J		NA				UNKN	0.010	mg/L	C	U
Sodium		NA					NA				UNKN	33.400	mg/L	C	-
Thallium		NA					NA				UNKN	0.001	mg/L	C	U
Tin		NA					NA				UNKN	0.030	mg/L	C	U
Vanadium	UNKN	0.044	mg/L	C	J		NA				UNKN	0.044	mg/L	C	J
Zinc	UNKN	0.080	mg/L	C	J		NA				UNKN	0.026	mg/L	C	J
Volatile Organics															
1,1,1,2-Tetrachloroethane		NA					NA				UNFI	5.000	ug/L	D	U
1,1,1-Trichloroethane		NA					NA				UNFI	5.000	ug/L	D	U
1,1,2,2-Tetrachloroethane		NA					NA				UNFI	5.000	ug/L	D	U
1,1,2-Trichloroethane		NA					NA				UNFI	5.000	ug/L	D	U
1,1-Dichloroethane	UNFI	5.000	ug/L	C	U		NA				UNFI	5.000	ug/L	C	U
1,1-Dichloroethene		NA					NA				UNFI	5.000	ug/L	C	U
1,2,3-Trichloropropane		NA					NA				UNFI	5.000	ug/L	D	U
1,2-Dibromo-3-chloropropane		NA					NA				UNFI	10.000	ug/L	D	U
1,2-Dibromoethane		NA					NA				UNFI	5.000	ug/L	D	U
1,2-Dichloroethane		NA					NA				UNKN	5.000	ug/L	D	U
1,2-Dichloropropane		NA					NA				UNFI	5.000	ug/L	D	U
1,4-Dioxane		NA					NA				UNFI	1000.000	ug/L	D	U
2-Butanone		NA					NA				UNFI	10.000	ug/L	D	U

TABLE C-12A
(Continued)

PHASE I - CHEMICAL PARAMETERS

BORING NUMBER		2027					2027					2027			
SAMPLE NUMBER		066447					066580					066599			
SAMPLING DATE		06/27/89					09/10/89					09/10/89			
CHEMICAL PARAMETERS	FLTD	RESULTS	UNITS	L	VQ	FLTD	RESULTS	UNITS	L	VQ	FLTD	RESULTS	UNITS	L	VQ
Volatile Organics															
2-Chloro-1,3-butadiene		NA					NA				UNFI	5.000	ug/L	D	UJ
2-Hexanone		NA					NA				UNFI	10.000	ug/L	D	U
3-Chloropropene		NA					NA				UNFI	5.000	ug/L	D	UJ
4-Methyl-2-pentanone		NA					NA				UNFI	10.000	ug/L	D	U
Acetone	UNFI	10.000	ug/L	C	U		NA				UNFI	10.000	ug/L	C	U
Acetonitrile		NA					NA				UNFI	200.000	ug/L	D	U
Acrolein		NA					NA				UNFI	10.000	ug/L	D	U
Acrylonitrile		NA					NA				UNFI	10.000	ug/L	D	U
Benzene		NA					NA				UNFI	5.000	ug/L	D	UJ
Bromodichloromethane		NA					NA				UNFI	5.000	ug/L	D	U
Bromoform		NA					NA				UNFI	5.000	ug/L	D	U
Bromomethane		NA					NA				UNFI	10.000	ug/L	D	UJ
Carbon Tetrachloride		NA					NA				UNKN	5.000	ug/L	D	U
Carbon disulfide		NA					NA				UNFI	10.000	ug/L	D	-
Chlorobenzene		NA					NA				UNFI	5.000	ug/L	D	UJ
Chloroethane		NA					NA				UNFI	10.000	ug/L	D	UJ
Chloroform		NA					NA				UNFI	5.000	ug/L	D	U
Chloromethane		NA					NA				UNFI	10.000	ug/L	D	U
Dibromochloromethane		NA					NA				UNFI	5.000	ug/L	D	U
Dibromomethane		NA					NA				UNFI	10.000	ug/L	D	U
Dichlorodifluoromethane		NA					NA				UNFI	200.000	ug/L	D	R
Ethyl cyanide		NA					NA				UNFI	100.000	ug/L	D	R
Ethyl methacrylate		NA					NA				UNFI	10.000	ug/L	D	UJ
Ethylbenzene		NA					NA				UNFI	5.000	ug/L	D	UJ
Iodomethane		NA					NA				UNFI	5.000	ug/L	D	U
Isobutyl alcohol		NA					NA				UNFI	3000.000	ug/L	D	U
Methacrylonitrile		NA					NA				UNFI	10.000	ug/L	D	R
Methyl methacrylate		NA					NA				UNFI	10.000	ug/L	D	UJ
Methylene chloride	UNFI	10.000	ug/L	C	U		NA				UNFI	5.000	ug/L	C	U
Pyridine		NA					NA				UNFI	50000.000	ug/L	D	U
Styrene		NA					NA				UNFI	5.000	ug/L	D	UJ
Tetrachloroethene	UNFI	5.000	ug/L	C	U		NA				UNFI	5.000	ug/L	C	U
Toluene	UNFI	5.000	ug/L	C	UJ		NA				UNFI	5.000	ug/L	C	U
Trichloroethene	UNFI	5.000	ug/L	C	U		NA				UNFI	5.000	ug/L	D	U
Trichlorofluoromethane		NA					NA				UNFI	5.000	ug/L	D	U
Vinyl Acetate		NA					NA				UNFI	10.000	ug/L	D	U
Vinyl chloride		NA					NA				UNFI	10.000	ug/L	D	U
Xylenes, Total		NA					NA				UNFI	5.000	ug/L	D	UJ
cis-1,3-Dichloropropene		NA					NA				UNFI	5.000	ug/L	D	U
trans-1,2-Dichloroethene		NA					NA				UNFI	5.000	ug/L	D	U
trans-1,3-Dichloropropene		NA					NA				UNFI	5.000	ug/L	D	U
trans-1,4-Dichloro-2-butene		NA					NA				UNFI	20.000	ug/L	D	UJ

TABLE C-12A
(Continued)

PHASE I - CHEMICAL PARAMETERS

BORING NUMBER		2027				2027				2027			
SAMPLE NUMBER		066447				066580				066599			
SAMPLING DATE		06/27/89				09/10/89				09/10/89			
CHEMICAL PARAMETERS	FLTD	RESULTS	UNITS	L	VQ	FLTD	RESULTS	UNITS	L	VQ	FLTD	RESULTS	UNITS	L	VQ
Semivolatile Organics															
1,2,4,5-Tetrachlorobenzene		NA					NA				UNFI	10.000	ug/L	D	U
1,2,4-Trichlorobenzene		NA					NA				UNFI	10.000	ug/L	D	U
1,2-Dichlorobenzene		NA					NA				UNFI	10.000	ug/L	D	U
1,3,5-Trinitrobenzene		NA					NA				UNFI	10.000	ug/L	D	U
1,3-Dichlorobenzene		NA					NA				UNFI	10.000	ug/L	D	U
1,3-Dinitrobenzene		NA					NA				UNFI	10.000	ug/L	D	U
1,4-Dichlorobenzene		NA					NA				UNFI	10.000	ug/L	D	U
1,4-Naphthoquinone		NA					NA				UNFI	10.000	ug/L	D	U
1-Naphthylamine		NA					NA				UNFI	120.000	ug/L	D	UJ
2,3,4,6-Tetrachlorophenol		NA					NA				UNFI	10.000	ug/L	D	R
2,4,5-Trichlorophenol		NA					NA				UNFI	50.000	ug/L	D	R
2,4,6-Trichlorophenol		NA					NA				UNFI	10.000	ug/L	D	R
2,4-Dichlorophenol		NA					NA				UNFI	10.000	ug/L	D	R
2,4-Dimethylphenol		NA					NA				UNFI	10.000	ug/L	D	R
2,4-Dinitrophenol		NA					NA				UNFI	50.000	ug/L	D	R
2,4-Dinitrotoluene		NA					NA				UNFI	10.000	ug/L	D	U
2,6-Dichlorophenol		NA					NA				UNFI	10.000	ug/L	D	R
2,6-Dinitrotoluene		NA					NA				UNFI	10.000	ug/L	D	U
2-Acetylaminofluorene		NA					NA				UNFI	10.000	ug/L	D	U
2-Chloronaphthalene		NA					NA				UNFI	10.000	ug/L	D	U
2-Chlorophenol		NA					NA				UNFI	10.000	ug/L	D	R
2-Methylnaphthalene		NA					NA				UNKN	10.000	ug/L	D	U
2-Methylphenol		NA					NA				UNFI	10.000	ug/L	D	R
2-Naphthylamine		NA					NA				UNFI	170.000	ug/L	D	UJ
2-Nitroaniline		NA					NA				UNFI	50.000	ug/L	D	UJ
2-Nitrophenol		NA					NA				UNFI	10.000	ug/L	D	R
2-Picoline		NA					NA				UNFI	70.000	ug/L	D	U
3,3'-Dichlorobenzidine		NA					NA				UNFI	20.000	ug/L	D	U
3,3'-Dimethylbenzidine		NA					NA				UNFI	80.000	ug/L	D	U
3-Methylcholanthrene		NA					NA				UNFI	30.000	ug/L	D	U
3-Methylphenol		NA					NA				UNFI	10.000	ug/L	D	R
3-Nitroaniline		NA					NA				UNFI	50.000	ug/L	D	UJ
4,6-Dinitro-2-methylphenol		NA					NA				UNFI	50.000	ug/L	D	R
4-Aminobiphenyl		NA					NA				UNFI	50.000	ug/L	D	UJ
4-Bromophenyl phenyl ether		NA					NA				UNFI	10.000	ug/L	D	U
4-Chloro-3-methylphenol		NA					NA				UNFI	10.000	ug/L	D	R
4-Chlorophenylphenyl ether		NA					NA				UNFI	10.000	ug/L	D	U
4-Methylphenol		NA					NA				UNFI	10.000	ug/L	D	R
4-Nitroaniline		NA					NA				UNFI	50.000	ug/L	D	UJ
4-Nitrophenol		NA					NA				UNFI	50.000	ug/L	D	R
4-Nitroquinoline-1-oxide		NA					NA				UNFI	10.000	ug/L	D	UJ
5-Nitro-o-toluidine		NA					NA				UNKN	20.000	ug/L	D	U

000306

TABLE C-12A
(Continued)

PHASE I - CHEMICAL PARAMETERS

BORING NUMBER		2027				2027				2027			
SAMPLE NUMBER		066447				066580				066599			
SAMPLING DATE		06/27/89				09/10/89				09/10/89			
CHEMICAL PARAMETERS	FLTD	RESULTS	UNITS	L	VQ	FLTD	RESULTS	UNITS	L	VQ	FLTD	RESULTS	UNITS	L	VQ
Semivolatile Organics															
7,12-Dimethylbenz(a)anthracene		NA					NA				UNFI	20.000	ug/L	D	U
Acenaphthene		NA					NA				UNFI	10.000	ug/L	D	U
Acenaphthylene		NA					NA				UNFI	10.000	ug/L	D	U
Acetophenone		NA					NA				UNFI	10.000	ug/L	D	U
Aniline		NA					NA				UNFI	10.000	ug/L	D	U
Anthracene		NA					NA				UNFI	10.000	ug/L	D	U
Aramite		NA					NA				UNFI	10.000	ug/L	D	U
Benzo(a)anthracene		NA					NA				UNFI	10.000	ug/L	D	U
Benzo(a)pyrene		NA					NA				UNFI	10.000	ug/L	D	U
Benzo(b)fluoranthene		NA					NA				UNFI	10.000	ug/L	D	U
Benzo(g,h,i)perylene		NA					NA				UNFI	10.000	ug/L	D	U
Benzo(k)fluoranthene		NA					NA				UNFI	10.000	ug/L	D	U
Benzyl alcohol		NA					NA				UNFI	10.000	ug/L	D	U
Butyl benzyl phthalate		NA					NA				UNFI	10.000	ug/L	D	U
Chrysene		NA					NA				UNFI	10.000	ug/L	D	U
Di-n-butyl phthalate		NA					NA				UNFI	10.000	ug/L	D	U
Di-n-octyl phthalate		NA					NA				UNFI	10.000	ug/L	D	U
Diallate		NA					NA				UNFI	10.000	ug/L	D	U
Dibenzo(a,h)anthracene		NA					NA				UNFI	10.000	ug/L	D	U
Dibenzofuran		NA					NA				UNFI	10.000	ug/L	D	U
Diethyl phthalate		NA					NA				UNFI	10.000	ug/L	D	U
Dimethyl phthalate		NA					NA				UNFI	10.000	ug/L	D	U
Diphenylamine		NA					NA				UNFI	10.000	ug/L	D	U
Ethyl methanesulfonate		NA					NA				UNFI	10.000	ug/L	D	U
Fluoranthene		NA					NA				UNFI	10.000	ug/L	D	U
Fluorene		NA					NA				UNFI	10.000	ug/L	D	U
Hexachlorobenzene		NA					NA				UNFI	10.000	ug/L	D	U
Hexachlorobutadiene		NA					NA				UNFI	10.000	ug/L	D	U
Hexachlorocyclopentadiene		NA					NA				UNFI	10.000	ug/L	D	U
Hexachloroethane		NA					NA				UNFI	10.000	ug/L	D	U
Hexachlorophene		NA					NA				UNFI	500.000	ug/L	D	R
Hexachloropropene		NA					NA				UNFI	20.000	ug/L	D	U
Indeno(1,2,3-cd)pyrene		NA					NA				UNFI	10.000	ug/L	D	U
Isophorone		NA					NA				UNFI	10.000	ug/L	D	U
Isosafrole		NA					NA				UNFI	10.000	ug/L	D	U
Methapyrilene		NA					NA				UNFI	40.000	ug/L	D	U
Methyl methanesulfonate		NA					NA				UNFI	10.000	ug/L	D	U
Methyl parathion		NA					NA				UNFI	0.050	ug/L	D	UJ
N-Nitroso-di-n-propylamine		NA					NA				UNFI	10.000	ug/L	D	U
N-Nitrosodi-n-butylamine		NA					NA				UNFI	20.000	ug/L	D	U
N-Nitrosodiethylamine		NA					NA				UNFI	10.000	ug/L	D	U
N-Nitrosodimethylamine		NA					NA				UNFI	10.000	ug/L	D	U

TABLE C-12A
(Continued)

PHASE I - CHEMICAL PARAMETERS

BORING NUMBER		2027				2027				2027			
SAMPLE NUMBER		066447				066580				066599			
SAMPLING DATE		06/27/89				09/10/89				09/10/89			
CHEMICAL PARAMETERS	FLTD	RESULTS	UNITS	L	VQ	FLTD	RESULTS	UNITS	L	VQ	FLTD	RESULTS	UNITS	L	VQ
Semivolatile Organics															
N-Nitrosodiphenylamine		NA					NA				UNFI	3.000	ug/L	D	J
N-Nitrosomethylethylamine		NA					NA				UNFI	10.000	ug/L	D	U
N-Nitrosomorpholine		NA					NA				UNFI	10.000	ug/L	D	U
N-Nitrosopiperidine		NA					NA				UNFI	10.000	ug/L	D	U
N-Nitrosopyrrolidine		NA					NA				UNFI	10.000	ug/L	D	U
Naphthalene		NA					NA				UNFI	10.000	ug/L	D	U
Nitrobenzene		NA					NA				UNFI	10.000	ug/L	D	U
O,O,O-Triethylphosphorothioate		NA					NA				UNFI	10.000	ug/L	D	U
Parathion		NA					NA				UNFI	0.050	ug/L	D	U
Pentachlorobenzene		NA					NA				UNFI	20.000	ug/L	D	U
Pentachloroethane		NA					NA				UNFI	20.000	ug/L	D	U
Pentachloronitrobenzene		NA					NA				UNKN	20.000	ug/L	D	U
Pentachlorophenol		NA					NA				UNFI	50.000	ug/L	D	R
Phenacetin		NA					NA				UNFI	10.000	ug/L	D	U
Phenanthrene		NA					NA				UNFI	10.000	ug/L	D	U
Phenol		NA					NA				UNFI	10.000	ug/L	D	R
Pronamide		NA					NA				UNFI	30.000	ug/L	D	U
Pyrene		NA					NA				UNFI	10.000	ug/L	D	U
Safrole		NA					NA				UNFI	10.000	ug/L	D	U
Sulfotep		NA					NA				UNFI	1.000	ug/L	D	UJ
a,a-Dimethylphenethylamine		NA					NA				UNFI	10.000	ug/L	D	UJ
bis(2-Chloroethoxy)methane		NA					NA				UNFI	10.000	ug/L	D	U
bis(2-Chloroethyl)ether		NA					NA				UNFI	10.000	ug/L	D	U
bis(2-Chloroisopropyl) ether		NA					NA				UNFI	10.000	ug/L	D	U
bis(2-Ethylhexyl) phthalate		NA					NA				UNFI	3.000	ug/L	D	J
o-Toluidine		NA					NA				UNFI	10.000	ug/L	D	R
p-Chloroaniline		NA					NA				UNFI	10.000	ug/L	D	UJ
p-Dimethylaminoazobenzene		NA					NA				UNFI	30.000	ug/L	D	U
p-Phenylenediamine		NA					NA				UNFI	50.000	ug/L	D	UJ
Herbicide Organics															
2,4,5-T		NA					NA				UNFI	5.000	ug/L	D	U
2,4,5-TP (Silvex)		NA					NA				UNFI	0.025	ug/L	D	U
2,4-D		NA					NA				UNFI	0.050	ug/L	D	U
Dinoseb		NA					NA				UNFI	20.000	ug/L	D	U
Pesticide Organics/PCBs															
4,4'-DDD		NA					NA				UNFI	0.100	ug/L	D	UJ
4,4'-DDE		NA					NA				UNFI	0.100	ug/L	D	UJ
4,4'-DDT		NA					NA				UNFI	0.100	ug/L	D	UJ

000308

TABLE C-12A
(Continued)

PHASE I - CHEMICAL PARAMETERS

BORING NUMBER		2027				2027				2027			
SAMPLE NUMBER		066447				066580				066599			
SAMPLING DATE		06/27/89				09/10/89				09/10/89			
CHEMICAL PARAMETERS	FLTD	RESULTS	UNITS	L	VQ	FLTD	RESULTS	UNITS	L	VQ	FLTD	RESULTS	UNITS	L	VQ
Pesticide Organics/PCBs															
Aldrin		NA					NA				UNFI	0.050	ug/L	D	UJ
Aroclor-1016		NA					NA				UNFI	0.500	ug/L	D	UJ
Aroclor-1221		NA					NA				UNFI	0.500	ug/L	D	UJ
Aroclor-1232		NA					NA				UNFI	0.500	ug/L	D	UJ
Aroclor-1242		NA					NA				UNFI	0.500	ug/L	D	UJ
Aroclor-1248		NA					NA				UNFI	0.500	ug/L	D	UJ
Aroclor-1254		NA					NA				UNFI	1.000	ug/L	D	UJ
Aroclor-1260		NA					NA				UNFI	1.000	ug/L	D	UJ
Dieldrin		NA					NA				UNFI	0.100	ug/L	D	UJ
Dimethoate		NA					NA				UNFI	1.000	ug/L	D	U
Disulfoton		NA					NA				UNFI	1.000	ug/L	D	U
Endosulfan II		NA					NA				UNFI	0.100	ug/L	D	UJ
Endosulfan sulfate		NA					NA				UNFI	0.100	ug/L	D	UJ
Endosulfan-I		NA					NA				UNFI	0.050	ug/L	D	UJ
Endrin		NA					NA				UNFI	0.100	ug/L	D	UJ
Endrin ketone		NA					NA				UNFI	0.100	ug/L	D	UJ
Famphur		NA					NA				UNFI	1.000	ug/L	D	U
Heptachlor		NA					NA				UNFI	0.050	ug/L	D	UJ
Heptachlor epoxide		NA					NA				UNFI	0.050	ug/L	D	UJ
Isodrin		NA					NA				UNFI	0.050	ug/L	C	U
Kepone		NA					NA				UNFI	0.100	ug/L	C	U
Methoxychlor		NA					NA				UNFI	0.500	ug/L	D	UJ
Phorate		NA					NA				UNFI	1.000	ug/L	D	U
Thionazin		NA					NA				UNFI	1.000	ug/L	D	U
Toxaphene		NA					NA				UNFI	1.000	ug/L	D	UJ
alpha-BHC		NA					NA				UNFI	0.050	ug/L	D	UJ
alpha-Chlordane		NA					NA				UNFI	0.500	ug/L	D	UJ
beta-BHC		NA					NA				UNFI	0.050	ug/L	D	UJ
delta-BHC		NA					NA				UNFI	0.050	ug/L	D	UJ
gamma-BHC (Lindane)		NA					NA				UNFI	0.050	ug/L	D	UJ
gamma-Chlordane		NA					NA				UNFI	0.500	ug/L	D	UJ
General Chemistry															
Chloride	UNFI	140.000	mg/L	C	J	UNFI	77.000	mg/L	C	J		NA			
Fluoride	UNFI	0.120	mg/L	C	J	UNFI	0.500	mg/L	C	J		NA			
Nitrate	UNFI	0.100	mg/L	C	UJ	UNFI	0.100	mg/L	C	U		NA			
Sulfate	UNFI	569.000	mg/L	C	J	UNFI	726.000	mg/L	C	J		NA			
Sulfide		NA					NA				UNFI	0.500	mg/L	C	U
Total Organic Carbon	UNFI	2.684	mg/L	C	UJ	UNFI	3.330	mg/L	C	J		NA			
Total Organic Halides	UNFI	0.010	mg/L	C	U	UNFI	0.028	mg/L	C	-		NA			

TABLE C-12A
(Continued)

PHASE I - CHEMICAL PARAMETERS

BORING NUMBER		2027					2027					2027			
SAMPLE NUMBER		003454					066581					066600			
		DUPLICATE					DUPLICATE					DUPLICATE			
SAMPLING DATE		08/10/88					09/10/89					09/10/89			
CHEMICAL PARAMETERS	FLTD	RESULTS	UNITS	L	VQ	FLTD	RESULTS	UNITS	L	VQ	FLTD	RESULTS	UNITS	L	VQ
Inorganics															
Aluminum		NA					NA				UNKN	0.287	mg/L	D	-
Antimony		NA					NA				UNKN	0.030	mg/L	D	U
Arsenic	*F	0.010	mg/L	C	U		NA					NA			
Arsenic		NA					NA				UNKN	0.002	mg/L	D	U
Barium	*F	0.200	mg/L	C	U		NA					NA			
Barium		NA					NA				UNKN	0.065	mg/L	D	-
Beryllium		NA					NA				UNKN	0.002	mg/L	D	U
Cadmium	*F	0.005	mg/L	C	U		NA					NA			
Cadmium		NA					NA				UNKN	0.019	mg/L	D	-
Calcium	*F	210.000	mg/L	C	-		NA					NA			
Calcium		NA					NA				UNKN	519.000	mg/L	D	-
Chromium	*F	0.010	mg/L	C	U		NA					NA			
Chromium		NA					NA				UNKN	0.036	mg/L	D	-
Cobalt		NA					NA				UNKN	0.014	mg/L	D	-
Copper	*F	0.030	mg/L	C	U		NA					NA			
Copper		NA					NA				UNKN	0.010	mg/L	D	U
Cyanide		NA					NA				UNKN	0.005	mg/L	D	U
Iron	*F	6.000	mg/L	C	-		NA					NA			
Iron		NA					NA				UNKN	9.610	mg/L	D	J
Lead	*F	0.005	mg/L	C	U		NA					NA			
Lead		NA					NA				UNKN	0.006	mg/L	D	J
Magnesium	*F	43.000	mg/L	C	-		NA					NA			
Magnesium		NA					NA				UNKN	81.900	mg/L	D	-
Manganese	*F	0.480	mg/L	C	-		NA					NA			
Manganese		NA					NA				UNKN	1.580	mg/L	D	-
Mercury	*F	0.000	mg/L	C	U		NA					NA			
Mercury		NA					NA				UNKN	0.000	mg/L	D	U
Molybdenum	*F	0.050	mg/L	C	U		NA					NA			
Nickel	*F	0.040	mg/L	C	U		NA					NA			
Nickel		NA					NA				UNKN	0.037	mg/L	D	-
Osmium		NA					NA				UNKN	0.050	mg/L	D	R
Potassium	*F	5.000	mg/L	C	U		NA					NA			
Potassium		NA					NA				UNKN	5.530	mg/L	D	-
Selenium	*F	0.005	mg/L	C	U		NA					NA			
Selenium		NA					NA				UNKN	0.002	mg/L	D	UJ
Silver	*F	0.010	mg/L	C	U		NA					NA			
Silver		NA					NA				UNKN	0.010	mg/L	D	U
Sodium	*F	33.000	mg/L	C	-		NA					NA			
Sodium		NA					NA				UNKN	35.100	mg/L	D	-
Thallium		NA					NA				UNKN	0.001	mg/L	D	U
Tin		NA					NA				UNKN	0.030	mg/L	D	R
Vanadium		NA					NA				UNKN	0.048	mg/L	D	-

000310

TABLE C-12A
(Continued)

PHASE I - CHEMICAL PARAMETERS

BORING NUMBER		2027				2027				2027			
SAMPLE NUMBER		003454				066581				066600			
		DUPLICATE				DUPLICATE				DUPLICATE			
SAMPLING DATE		08/10/88				09/10/89				09/10/89			
CHEMICAL PARAMETERS	FLTD	RESULTS	UNITS	L	VQ	FLTD	RESULTS	UNITS	L	VQ	FLTD	RESULTS	UNITS	L	VQ
Inorganics															
Zinc		NA					NA				UNKN	0.108	mg/L	D	J
Volatile Organics															
1,1,1,2-Tetrachloroethane		NA					NA				UNFI	5.000	ug/L	D	U
1,1,1-Trichloroethane		NA					NA				UNFI	5.000	ug/L	D	U
1,1,2,2-Tetrachloroethane		NA					NA				UNFI	5.000	ug/L	D	U
1,1,2-Trichloroethane		NA					NA				UNFI	5.000	ug/L	D	U
1,1-Dichloroethane		NA					NA				UNFI	5.000	ug/L	D	U
1,1-Dichloroethene		NA					NA				UNFI	5.000	ug/L	D	U
1,2,3-Trichloropropane		NA					NA				UNFI	5.000	ug/L	D	UJ
1,2-Dibromo-3-chloropropane		NA					NA				UNFI	10.000	ug/L	D	U
1,2-Dibromoethane		NA					NA				UNFI	5.000	ug/L	D	U
1,2-Dichloroethane		NA					NA				UNFI	5.000	ug/L	D	U
1,2-Dichloropropane		NA					NA				UNFI	5.000	ug/L	D	U
1,4-Dioxane		NA					NA				UNFI	1000.000	ug/L	D	U
2-Butanone		NA					NA				UNFI	10.000	ug/L	D	U
2-Chloro-1,3-butadiene		NA					NA				UNFI	5.000	ug/L	D	R
2-Hexanone		NA					NA				UNFI	10.000	ug/L	D	U
3-Chloropropene		NA					NA				UNFI	5.000	ug/L	D	UJ
4-Methyl-2-pentanone		NA					NA				UNKN	10.000	ug/L	D	U
Acetone		NA					NA				UNFI	10.000	ug/L	D	UJ
Acetonitrile		NA					NA				UNFI	200.000	ug/L	D	U
Acrolein		NA					NA				UNFI	10.000	ug/L	D	U
Acrylonitrile		NA					NA				UNFI	10.000	ug/L	D	U
Benzene		NA					NA				UNFI	5.000	ug/L	D	UJ
Bromodichloromethane		NA					NA				UNFI	5.000	ug/L	D	U
Bromoform		NA					NA				UNFI	5.000	ug/L	D	U
Bromomethane		NA					NA				UNFI	10.000	ug/L	D	UJ
Carbon Tetrachloride		NA					NA				UNFI	5.000	ug/L	D	U
Carbon disulfide		NA					NA				UNFI	1.000	ug/L	D	J
Chlorobenzene		NA					NA				UNFI	5.000	ug/L	D	UJ
Chloroethane		NA					NA				UNFI	10.000	ug/L	D	UJ
Chloroform		NA					NA				UNFI	5.000	ug/L	D	U
Chloromethane		NA					NA				UNFI	10.000	ug/L	D	U
Dibromochloromethane		NA					NA				UNFI	5.000	ug/L	D	U
Dibromomethane		NA					NA				UNFI	10.000	ug/L	D	U
Dichlorodifluoromethane		NA					NA				UNFI	200.000	ug/L	D	R
Ethyl cyanide		NA					NA				UNFI	100.000	ug/L	D	UJ
Ethyl methacrylate		NA					NA				UNFI	10.000	ug/L	D	UJ
Ethylbenzene		NA					NA				UNFI	5.000	ug/L	D	UJ
Iodomethane		NA					NA				UNFI	5.000	ug/L	D	U

TABLE C-12A
(Continued)

PHASE I - CHEMICAL PARAMETERS

BORING NUMBER		2027				2027				2027			
SAMPLE NUMBER		003454				066581				066600			
		DUPLICATE				DUPLICATE				DUPLICATE			
SAMPLING DATE		08/10/88				09/10/89				09/10/89			
CHEMICAL PARAMETERS	FLTD	RESULTS	UNITS	L	VQ	FLTD	RESULTS	UNITS	L	VQ	FLTD	RESULTS	UNITS	L	VQ
Volatile Organics															
Isobutyl alcohol		NA					NA				UNFI	3000.000	ug/L	D	U
Methacrylonitrile		NA					NA				UNFI	10.000	ug/L	D	R
Methyl methacrylate		NA					NA				UNFI	10.000	ug/L	D	UJ
Methylene chloride		NA					NA				UNFI	5.000	ug/L	D	U
Pyridine		NA					NA				UNFI	50000.000	ug/L	D	U
Styrene		NA					NA				UNFI	5.000	ug/L	D	UJ
Tetrachloroethene		NA					NA				UNFI	5.000	ug/L	D	U
Toluene		NA					NA				UNFI	5.000	ug/L	D	UJ
Trichloroethene		NA					NA				UNFI	5.000	ug/L	D	U
Trichlorofluoromethane		NA					NA				UNFI	5.000	ug/L	D	U
Vinyl Acetate		NA					NA				UNFI	10.000	ug/L	D	U
Vinyl chloride		NA					NA				UNFI	10.000	ug/L	D	U
Xylenes, Total		NA					NA				UNFI	5.000	ug/L	D	UJ
cis-1,3-Dichloropropene		NA					NA				UNFI	5.000	ug/L	D	U
trans-1,2-Dichloroethene		NA					NA				UNFI	5.000	ug/L	D	U
trans-1,3-Dichloropropene		NA					NA				UNFI	5.000	ug/L	D	U
trans-1,4-Dichloro-2-butene		NA					NA				UNFI	20.000	ug/L	D	UJ
Semivolatile Organics															
1,2,4,5-Tetrachlorobenzene		NA					NA				UNKN	10.000	ug/L	D	U
1,2,4-Trichlorobenzene		NA					NA				UNFI	10.000	ug/L	D	U
1,2-Dichlorobenzene		NA					NA				UNFI	10.000	ug/L	D	U
1,3,5-Trinitrobenzene		NA					NA				UNFI	10.000	ug/L	D	U
1,3-Dichlorobenzene		NA					NA				UNFI	10.000	ug/L	D	U
1,3-Dinitrobenzene		NA					NA				UNFI	10.000	ug/L	D	U
1,4-Dichlorobenzene		NA					NA				UNFI	10.000	ug/L	D	U
1,4-Naphthoquinone		NA					NA				UNFI	10.000	ug/L	D	U
1-Naphthylamine		NA					NA				UNFI	120.000	ug/L	D	UJ
2,3,4,6-Tetrachlorophenol		NA					NA				UNFI	10.000	ug/L	D	R
2,4,5-Trichlorophenol		NA					NA				UNFI	50.000	ug/L	D	R
2,4,6-Trichlorophenol		NA					NA				UNFI	10.000	ug/L	D	R
2,4-Dichlorophenol		NA					NA				UNFI	10.000	ug/L	D	R
2,4-Dimethylphenol		NA					NA				UNFI	10.000	ug/L	D	R
2,4-Dinitrophenol		NA					NA				UNFI	50.000	ug/L	D	R
2,4-Dinitrotoluene		NA					NA				UNFI	10.000	ug/L	D	U
2,6-Dichlorophenol		NA					NA				UNFI	10.000	ug/L	D	R
2,6-Dinitrotoluene		NA					NA				UNFI	10.000	ug/L	D	U
2-Acetylaminofluorene		NA					NA				UNFI	10.000	ug/L	D	U
2-Chloronaphthalene		NA					NA				UNFI	10.000	ug/L	D	U
2-Chlorophenol		NA					NA				UNKN	10.000	ug/L	D	R
2-Methylnaphthalene		NA					NA				UNFI	10.000	ug/L	D	U

000342

TABLE C-12A
(Continued)

PHASE I - CHEMICAL PARAMETERS

BORING NUMBER		2027				2027				2027			
SAMPLE NUMBER		003454				066581				066600			
		DUPLICATE				DUPLICATE				DUPLICATE			
SAMPLING DATE		08/10/88				09/10/89				09/10/89			
CHEMICAL PARAMETERS	FLTD	RESULTS	UNITS	L	VQ	FLTD	RESULTS	UNITS	L	VQ	FLTD	RESULTS	UNITS	L	VQ
Semivolatile Organics															
2-Methylphenol		NA					NA				UNFI	10.000	ug/L	D	R
2-Naphthylamine		NA					NA				UNFI	170.000	ug/L	D	UJ
2-Nitroaniline		NA					NA				UNFI	50.000	ug/L	D	UJ
2-Nitrophenol		NA					NA				UNFI	10.000	ug/L	D	R
2-Picoline		NA					NA				UNFI	70.000	ug/L	D	U
3,3'-Dichlorobenzidine		NA					NA				UNFI	20.000	ug/L	D	U
3,3'-Dimethylbenzidine		NA					NA				UNFI	80.000	ug/L	D	U
3-Methylcholanthrene		NA					NA				UNFI	30.000	ug/L	D	U
3-Methylphenol		NA					NA				UNFI	10.000	ug/L	D	R
3-Nitroaniline		NA					NA				UNFI	50.000	ug/L	D	UJ
4,6-Dinitro-2-methylphenol		NA					NA				UNFI	50.000	ug/L	D	R
4-Aminobiphenyl		NA					NA				UNFI	50.000	ug/L	D	UJ
4-Bromophenyl phenyl ether		NA					NA				UNFI	10.000	ug/L	D	U
4-Chloro-3-methylphenol		NA					NA				UNKN	10.000	ug/L	D	R
4-Chlorophenylphenyl ether		NA					NA				UNFI	10.000	ug/L	D	U
4-Methylphenol		NA					NA				UNFI	10.000	ug/L	D	R
4-Nitroaniline		NA					NA				UNFI	50.000	ug/L	D	R
4-Nitrophenol		NA					NA				UNFI	50.000	ug/L	D	R
4-Nitroquinoline-1-oxide		NA					NA				UNFI	10.000	ug/L	D	UJ
5-Nitro-o-toluidine		NA					NA				UNFI	20.000	ug/L	D	U
7,12-Dimethylbenz(a)anthracene		NA					NA				UNFI	20.000	ug/L	D	U
Acenaphthene		NA					NA				UNFI	10.000	ug/L	D	U
Acenaphthylene		NA					NA				UNFI	10.000	ug/L	D	U
Acetophenone		NA					NA				UNFI	10.000	ug/L	D	U
Aniline		NA					NA				UNFI	10.000	ug/L	D	U
Anthracene		NA					NA				UNFI	10.000	ug/L	D	U
Aramite		NA					NA				UNFI	10.000	ug/L	D	U
Benzo(a)anthracene		NA					NA				UNFI	10.000	ug/L	D	U
Benzo(a)pyrene		NA					NA				UNFI	10.000	ug/L	D	U
Benzo(b)fluoranthene		NA					NA				UNFI	10.000	ug/L	D	U
Benzo(g,h,i)perylene		NA					NA				UNFI	10.000	ug/L	D	U
Benzo(k)fluoranthene		NA					NA				UNFI	10.000	ug/L	D	U
Benzyl alcohol		NA					NA				UNFI	10.000	ug/L	D	U
Butyl benzyl phthalate		NA					NA				UNKN	10.000	ug/L	D	U
Chrysene		NA					NA				UNFI	10.000	ug/L	D	U
Di-n-butyl phthalate		NA					NA				UNFI	10.000	ug/L	D	U
Di-n-octyl phthalate		NA					NA				UNFI	10.000	ug/L	D	U
Diallate		NA					NA				UNFI	10.000	ug/L	D	U
Dibenzo(a,h)anthracene		NA					NA				UNFI	10.000	ug/L	D	U
Dibenzofuran		NA					NA				UNFI	10.000	ug/L	D	U
Diethyl phthalate		NA					NA				UNFI	10.000	ug/L	D	U
Dimethyl phthalate		NA					NA				UNFI	10.000	ug/L	D	U

TABLE C-12A
(Continued)

PHASE I - CHEMICAL PARAMETERS

BORING NUMBER	2027				2027				2027			
SAMPLE NUMBER	003454				066581				066600			
	DUPLICATE				DUPLICATE				DUPLICATE			
SAMPLING DATE	08/10/88				09/10/89				09/10/89			
CHEMICAL PARAMETERS	FLTD	RESULTS	UNITS	L VQ	FLTD	RESULTS	UNITS	L VQ	FLTD	RESULTS	UNITS	L VQ
Semivolatile Organics												
Diphenylamine		NA				NA			UNFI	10.000	ug/L	D U
Ethyl methanesulfonate		NA				NA			UNFI	10.000	ug/L	D U
Fluoranthene		NA				NA			UNFI	10.000	ug/L	D U
Fluorene		NA				NA			UNFI	10.000	ug/L	D U
Hexachlorobenzene		NA				NA			UNFI	10.000	ug/L	D U
Hexachlorobutadiene		NA				NA			UNFI	10.000	ug/L	D U
Hexachlorocyclopentadiene		NA				NA			UNFI	10.000	ug/L	D U
Hexachloroethane		NA				NA			UNFI	10.000	ug/L	D U
Hexachlorophene		NA				NA			UNFI	500.000	ug/L	D R
Hexachloropropene		NA				NA			UNFI	20.000	ug/L	D U
Indeno(1,2,3-cd)pyrene		NA				NA			UNFI	10.000	ug/L	D U
Isophorone		NA				NA			UNFI	10.000	ug/L	D U
Isosafrole		NA				NA			UNFI	10.000	ug/L	D U
Methapyrilene		NA				NA			UNFI	40.000	ug/L	D U
Methyl methanesulfonate		NA				NA			UNFI	10.000	ug/L	D U
Methyl parathion		NA				NA			UNFI	0.050	ug/L	D UJ
N-Nitroso-di-n-propylamine		NA				NA			UNFI	10.000	ug/L	D U
N-Nitrosodi-n-butylamine		NA				NA			UNFI	20.000	ug/L	D U
N-Nitrosodiethylamine		NA				NA			UNFI	10.000	ug/L	D U
N-Nitrosodimethylamine		NA				NA			UNFI	10.000	ug/L	D U
N-Nitrosodiphenylamine		NA				NA			UNFI	10.000	ug/L	D U
N-Nitrosomethylethylamine		NA				NA			UNFI	10.000	ug/L	D U
N-Nitrosomorpholine		NA				NA			UNFI	10.000	ug/L	D U
N-Nitrosopiperidine		NA				NA			UNFI	10.000	ug/L	D U
N-Nitrosopyrrolidine		NA				NA			UNFI	10.000	ug/L	D U
Naphthalene		NA				NA			UNFI	10.000	ug/L	D U
Nitrobenzene		NA				NA			UNFI	10.000	ug/L	D U
O,O,O-Triethylphosphorothioate		NA				NA			UNFI	10.000	ug/L	D U
Parathion		NA				NA			UNFI	0.050	ug/L	D U
Pentachlorobenzene		NA				NA			UNFI	20.000	ug/L	D U
Pentachloroethane		NA				NA			UNFI	20.000	ug/L	D U
Pentachloronitrobenzene		NA				NA			UNFI	20.000	ug/L	D U
Pentachlorophenol		NA				NA			UNFI	50.000	ug/L	D R
Phenacetin		NA				NA			UNFI	10.000	ug/L	D U
Phenanthrene		NA				NA			UNFI	10.000	ug/L	D U
Phenol		NA				NA			UNFI	10.000	ug/L	D R
Pronamide		NA				NA			UNFI	30.000	ug/L	D U
Pyrene		NA				NA			UNFI	10.000	ug/L	D U
Safrole		NA				NA			UNFI	10.000	ug/L	D U
Sulfotep		NA				NA			UNFI	1.000	ug/L	D UJ
a,a-Dimethylphenethylamine		NA				NA			UNFI	10.000	ug/L	D UJ
bis(2-Chloroethoxy)methane		NA				NA			UNFI	10.000	ug/L	D U

000214

TABLE C-12A
(Continued)

PHASE I - CHEMICAL PARAMETERS

BORING NUMBER		2027				2027				2027			
SAMPLE NUMBER		003454				066581				066600			
		DUPLICATE				DUPLICATE				DUPLICATE			
SAMPLING DATE		08/10/88				09/10/89				09/10/89			
CHEMICAL PARAMETERS	FLTD	RESULTS	UNITS	L	VQ	FLTD	RESULTS	UNITS	L	VQ	FLTD	RESULTS	UNITS	L	VQ
Semivolatile Organics															
bis(2-Chloroethyl)ether		NA					NA				UNFI	10.000	ug/L	D	U
bis(2-Chloroisopropyl) ether		NA					NA				UNFI	10.000	ug/L	D	U
bis(2-Ethylhexyl) phthalate		NA					NA				UNFI	10.000	ug/L	D	U
o-Toluidine		NA					NA				UNFI	10.000	ug/L	D	R
p-Chloroaniline		NA					NA				UNFI	10.000	ug/L	D	UJ
p-Dimethylaminoazobenzene		NA					NA				UNFI	30.000	ug/L	D	U
p-Phenylenediamine		NA					NA				UNFI	50.000	ug/L	D	UJ
Herbicide Organics															
2,4,5-T		NA					NA				UNFI	5.000	ug/L	D	U
2,4,5-TP (Silvex)		NA					NA				UNFI	0.025	ug/L	D	U
2,4-D		NA					NA				UNFI	0.050	ug/L	D	U
Dinoseb		NA					NA				UNFI	20.000	ug/L	D	U
Pesticide Organics/PCBs															
4,4'-DDD		NA					NA				UNFI	0.100	ug/L	D	U
4,4'-DDE		NA					NA				UNKN	0.100	ug/L	D	U
4,4'-DDT		NA					NA				UNFI	0.100	ug/L	D	U
Aldrin		NA					NA				UNFI	0.050	ug/L	D	U
Aroclor-1016		NA					NA				UNFI	0.500	ug/L	D	U
Aroclor-1221		NA					NA				UNFI	0.500	ug/L	D	U
Aroclor-1232		NA					NA				UNFI	0.500	ug/L	D	U
Aroclor-1242		NA					NA				UNFI	0.500	ug/L	D	U
Aroclor-1248		NA					NA				UNFI	0.500	ug/L	D	U
Aroclor-1254		NA					NA				UNFI	1.000	ug/L	D	U
Aroclor-1260		NA					NA				UNFI	1.000	ug/L	D	U
Dieldrin		NA					NA				UNFI	0.100	ug/L	D	U
Dimethoate		NA					NA				UNFI	1.000	ug/L	D	U
Disulfoton		NA					NA				UNFI	1.000	ug/L	D	U
Endosulfan II		NA					NA				UNFI	0.100	ug/L	D	U
Endosulfan sulfate		NA					NA				UNFI	0.100	ug/L	D	U
Endosulfan-I		NA					NA				UNFI	0.050	ug/L	D	U
Endrin		NA					NA				UNFI	0.100	ug/L	D	U
Endrin ketone		NA					NA				UNFI	0.100	ug/L	D	U
Famphur		NA					NA				UNFI	1.000	ug/L	D	U
Heptachlor		NA					NA				UNFI	0.050	ug/L	D	U
Heptachlor epoxide		NA					NA				UNFI	0.050	ug/L	D	U
Isodrin		NA					NA				UNFI	0.050	ug/L	C	U
Kepone		NA					NA				UNFI	0.100	ug/L	C	U
Methoxychlor		NA					NA				UNFI	0.500	ug/L	D	U

TABLE C-12A
(Continued)

PHASE I - CHEMICAL PARAMETERS

BORING NUMBER		2027				2027				2027			
SAMPLE NUMBER		003454				066581				066600			
		DUPLICATE				DUPLICATE				DUPLICATE			
SAMPLING DATE		08/10/88				09/10/89				09/10/89			
CHEMICAL PARAMETERS	FLTD	RESULTS	UNITS	L	VQ	FLTD	RESULTS	UNITS	L	VQ	FLTD	RESULTS	UNITS	L	VQ
Pesticide Organics/PCBs															
Phorate		NA					NA				UNFI	1.000	ug/L	D	U
Thionazin		NA					NA				UNFI	1.000	ug/L	D	U
Toxaphene		NA					NA				UNFI	1.000	ug/L	D	U
alpha-BHC		NA					NA				UNFI	0.050	ug/L	D	U
alpha-Chlordane		NA					NA				UNFI	0.500	ug/L	D	U
beta-BHC		NA					NA				UNFI	0.050	ug/L	D	U
delta-BHC		NA					NA				UNFI	0.050	ug/L	D	U
gamma-BHC (Lindane)		NA					NA				UNFI	0.050	ug/L	D	U
gamma-Chlordane		NA					NA				UNFI	0.500	ug/L	D	U
General Chemistry															
Ammonia	UNFI	0.500	mg/L	C	-		NA					NA			
Chloride	UNFI	98.000	mg/L	C	-	UNFI	114.000	mg/L	C	J		NA			
Fluoride	UNFI	1.800	mg/L	C	-	UNFI	0.130	mg/L	C	J		NA			
Nitrate	UNFI	0.100	mg/L	C	J	UNFI	0.100	mg/L	C	U		NA			
Phenols	UNFI	0.050	mg/L	C	U		NA					NA			
Sulfate	UNFI	310.000	mg/L	C	-	UNFI	1320.000	mg/L	C	J		NA			
Sulfide		NA					NA				UNFI	0.500	mg/L	C	U
Total Kjeldahl Nitrogen	UNFI	15.000	mg/L	C	U		NA					NA			
Total Organic Carbon		NA				UNFI	1.980	mg/L	C	J		NA			
Total Organic Halides		NA				UNFI	0.010	mg/L	C	U		NA			

000316

TABLE C-12A
(Continued)

PHASE I - CHEMICAL PARAMETERS

BORING NUMBER		2037					2037					2037			
SAMPLE NUMBER		003248					003448					003718			
SAMPLING DATE		06/01/88					08/08/88					11/18/88			
CHEMICAL PARAMETERS	FLTD	RESULTS	UNITS	L	VQ	FLTD	RESULTS	UNITS	L	VQ	FLTD	RESULTS	UNITS	L	VQ
Inorganics															
Aluminum	FILT	0.013	mg/L	C	J		NA					NA			
Antimony	FILT	0.047	mg/L	C	U		NA					NA			
Arsenic		NA				*F	0.010	mg/L	D	R		NA			
Arsenic	FILT	0.002	mg/L	C	J		NA				FILT	0.002	mg/L	C	UJ
Barium		NA				*F	0.200	mg/L	D	R		NA			
Barium	FILT	0.081	mg/L	C	J		NA				FILT	0.086	mg/L	C	-
Beryllium	FILT	0.002	mg/L	C	U		NA					NA			
Cadmium		NA				*F	0.005	mg/L	D	R		NA			
Cadmium	FILT	0.001	mg/L	C	U		NA				FILT	0.002	mg/L	C	U
Calcium		NA				*F	120.000	mg/L	D	R		NA			
Calcium	FILT	124.000	mg/L	C	J		NA				FILT	132.000	mg/L	C	-
Chromium		NA				*F	0.010	mg/L	D	R		NA			
Chromium	FILT	0.002	mg/L	C	U		NA				FILT	0.020	mg/L	C	U
Cobalt	FILT	0.005	mg/L	C	U		NA					NA			
Copper		NA				*F	0.030	mg/L	D	R		NA			
Copper	FILT	0.007	mg/L	C	U		NA				FILT	0.010	mg/L	C	U
Cyanide	UNKN	0.020	mg/L	C	NV		NA					NA			
Iron		NA				*F	3.100	mg/L	D	R		NA			
Iron	FILT	2.700	mg/L	C	-		NA				FILT	3.190	mg/L	C	-
Lead		NA				*F	0.005	mg/L	D	R		NA			
Lead	FILT	0.002	mg/L	C	U		NA				FILT	0.003	mg/L	C	R
Magnesium		NA				*F	29.000	mg/L	D	R		NA			
Magnesium	FILT	28.000	mg/L	C	-		NA				FILT	28.500	mg/L	C	-
Manganese		NA				*F	0.220	mg/L	D	R		NA			
Manganese	FILT	0.287	mg/L	C	-		NA				FILT	0.218	mg/L	C	-
Mercury		NA				*F	0.000	mg/L	C	R		NA			
Mercury	FILT	0.001	mg/L	C	-		NA				FILT	0.000	mg/L	C	U
Molybdenum		NA				*F	0.050	mg/L	D	R		NA			
Molybdenum	FILT	0.033	mg/L	C	U		NA				FILT	0.020	mg/L	C	U
Nickel		NA				*F	0.040	mg/L	D	R		NA			
Nickel	FILT	0.012	mg/L	C	U		NA				FILT	0.020	mg/L	C	U
Potassium		NA				*F	5.000	mg/L	D	R		NA			
Potassium	FILT	2.580	mg/L	C	J		NA				FILT	2.370	mg/L	C	-
Selenium		NA				*F	0.005	mg/L	D	R		NA			
Selenium	FILT	0.002	mg/L	C	UJ		NA				FILT	0.002	mg/L	C	UJ
Silver		NA				*F	0.010	mg/L	D	R		NA			
Silver	FILT	0.004	mg/L	C	U		NA				FILT	0.001	mg/L	C	U
Sodium		NA				*F	14.000	mg/L	D	R		NA			
Sodium	FILT	14.900	mg/L	C	-		NA				FILT	11.600	mg/L	C	-
Thallium	FILT	0.004	mg/L	C	UJ		NA					NA			
Vanadium	FILT	0.003	mg/L	C	U		NA					NA			
Zinc	FILT	0.100	mg/L	C	-		NA					NA			

TABLE C-12A
(Continued)

PHASE I - CHEMICAL PARAMETERS

BORING NUMBER		2037					2037					2037			
SAMPLE NUMBER		003248					003448					003718			
SAMPLING DATE		06/01/88					08/08/88					11/18/88			
CHEMICAL PARAMETERS	FLTD	RESULTS	UNITS	L	VQ	FLTD	RESULTS	UNITS	L	VQ	FLTD	RESULTS	UNITS	L	VQ
Volatile Organics															
1,1,1-Trichloroethane	UNFI	5.000	ug/L	D	U		NA					NA			
1,1,2,2-Tetrachloroethane	UNFI	5.000	ug/L	D	U		NA					NA			
1,1,2-Trichloroethane	UNFI	5.000	ug/L	D	U		NA					NA			
1,1-Dichloroethane	UNFI	5.000	ug/L	D	U		NA					NA			
1,1-Dichloroethene	UNFI	5.000	ug/L	C	NV		NA					NA			
1,2-Dichloroethane	UNFI	5.000	ug/L	D	U		NA					NA			
1,2-Dichloroethene	UNFI	5.000	ug/L	D	U		NA					NA			
1,2-Dichloropropane	UNFI	5.000	ug/L	D	U		NA					NA			
2-Butanone	UNFI	10.000	ug/L	D	R		NA					NA			
2-Hexanone	UNFI	10.000	ug/L	D	U		NA					NA			
4-Methyl-2-pentanone	UNFI	10.000	ug/L	D	U		NA					NA			
Acetone	UNFI	10.000	ug/L	D	U		NA					NA			
Benzene	UNFI	1.000	ug/L	C	NV		NA					NA			
Bromodichloromethane	UNFI	5.000	ug/L	D	U		NA					NA			
Bromoform	UNFI	5.000	ug/L	D	U		NA					NA			
Bromomethane	UNKN	10.000	ug/L	D	U		NA					NA			
Carbon Tetrachloride	UNFI	5.000	ug/L	D	U		NA					NA			
Carbon disulfide	UNFI	5.000	ug/L	D	U		NA					NA			
Chlorobenzene	UNFI	5.000	ug/L	C	NV		NA					NA			
Chloroethane	UNFI	10.000	ug/L	D	U		NA					NA			
Chloroform	UNFI	5.000	ug/L	D	U		NA					NA			
Chloromethane	UNFI	10.000	ug/L	D	U		NA					NA			
Dibromochloromethane	UNFI	5.000	ug/L	D	U		NA					NA			
Ethylbenzene	UNFI	5.000	ug/L	D	UJ		NA					NA			
Methylene chloride	UNFI	5.000	ug/L	D	U		NA					NA			
Styrene	UNFI	5.000	ug/L	D	UJ		NA					NA			
Tetrachloroethene	UNFI	5.000	ug/L	D	U		NA					NA			
Toluene	UNFI	5.000	ug/L	C	NV		NA					NA			
Trichloroethene	UNFI	5.000	ug/L	C	NV		NA					NA			
Vinyl Acetate	UNFI	10.000	ug/L	D	UJ		NA					NA			
Vinyl chloride	UNFI	10.000	ug/L	D	U		NA					NA			
Xylenes, Total	UNFI	5.000	ug/L	D	UJ		NA					NA			
cis-1,3-Dichloropropene	UNFI	5.000	ug/L	D	U		NA					NA			
trans-1,3-Dichloropropene	UNFI	5.000	ug/L	D	U		NA					NA			
Semivolatile Organics															
1,2,4-Trichlorobenzene	UNFI	10.000	ug/L	D	U		NA					NA			
1,2-Dichlorobenzene	UNFI	10.000	ug/L	D	U		NA					NA			
1,3-Dichlorobenzene	UNFI	10.000	ug/L	D	U		NA					NA			
1,4-Dichlorobenzene	UNFI	10.000	ug/L	D	U		NA					NA			
2,4,5-Trichlorophenol	UNFI	50.000	ug/L	D	U		NA					NA			

000318

TABLE C-12A
(Continued)

PHASE I - CHEMICAL PARAMETERS

BORING NUMBER		2037					2037					2037			
SAMPLE NUMBER		003248					003448					003718			
SAMPLING DATE		06/01/88					08/08/88					11/18/88			
CHEMICAL PARAMETERS	FLTD	RESULTS	UNITS	L	VQ	FLTD	RESULTS	UNITS	L	VQ	FLTD	RESULTS	UNITS	L	VQ
Semivolatile Organics															
2,4,6-Trichlorophenol	UNFI	10.000	ug/L	D	U		NA					NA			
2,4-Dichlorophenol	UNFI	10.000	ug/L	D	U		NA					NA			
2,4-Dimethylphenol	UNFI	10.000	ug/L	D	U		NA					NA			
2,4-Dinitrophenol	UNFI	50.000	ug/L	D	U		NA					NA			
2,4-Dinitrotoluene	UNFI	10.000	ug/L	D	U		NA					NA			
2,6-Dinitrotoluene	UNFI	10.000	ug/L	D	U		NA					NA			
2-Chloronaphthalene	UNFI	10.000	ug/L	D	U		NA					NA			
2-Chlorophenol	UNFI	10.000	ug/L	D	U		NA					NA			
2-Methylnaphthalene	UNFI	10.000	ug/L	D	U		NA					NA			
2-Methylphenol	UNFI	10.000	ug/L	D	U		NA					NA			
2-Nitroaniline	UNFI	50.000	ug/L	D	U		NA					NA			
2-Nitrophenol	UNFI	10.000	ug/L	D	U		NA					NA			
3,3'-Dichlorobenzidine	UNFI	20.000	ug/L	D	U		NA					NA			
3-Nitroaniline	UNFI	50.000	ug/L	D	U		NA					NA			
4,6-Dinitro-2-methylphenol	UNFI	50.000	ug/L	D	U		NA					NA			
4-Bromophenyl phenyl ether	UNFI	10.000	ug/L	D	UJ		NA					NA			
4-Chloro-3-methylphenol	UNFI	10.000	ug/L	D	U		NA					NA			
4-Chlorophenylphenyl ether	UNFI	10.000	ug/L	D	U		NA					NA			
4-Methylphenol	UNFI	10.000	ug/L	D	U		NA					NA			
4-Nitroaniline	UNFI	50.000	ug/L	D	U		NA					NA			
4-Nitrophenol	UNFI	50.000	ug/L	D	U		NA					NA			
Acenaphthene	UNFI	10.000	ug/L	D	U		NA					NA			
Acenaphthylene	UNFI	10.000	ug/L	D	U		NA					NA			
Anthracene	UNFI	10.000	ug/L	D	U		NA					NA			
Benzo(a)anthracene	UNFI	10.000	ug/L	D	U		NA					NA			
Benzo(a)pyrene	UNFI	10.000	ug/L	D	U		NA					NA			
Benzo(b)fluoranthene	UNFI	10.000	ug/L	D	U		NA					NA			
Benzo(g,h,i)perylene	UNFI	10.000	ug/L	D	UJ		NA					NA			
Benzo(k)fluoranthene	UNFI	10.000	ug/L	D	U		NA					NA			
Benzoic acid	UNFI	50.000	ug/L	D	U		NA					NA			
Benzyl alcohol	UNFI	10.000	ug/L	D	U		NA					NA			
Butyl benzyl phthalate	UNFI	10.000	ug/L	D	U		NA					NA			
Chrysene	UNFI	10.000	ug/L	D	U		NA					NA			
Di-n-butyl phthalate	UNFI	6.000	ug/L	D	U		NA					NA			
Di-n-octyl phthalate	UNFI	10.000	ug/L	D	U		NA					NA			
Dibenzo(a,h)anthracene	UNFI	10.000	ug/L	D	U		NA					NA			
Dibenzofuran	UNFI	10.000	ug/L	D	U		NA					NA			
Diethyl phthalate	UNFI	10.000	ug/L	D	U		NA					NA			
Dimethyl phthalate	UNFI	10.000	ug/L	D	U		NA					NA			
Fluoranthene	UNFI	10.000	ug/L	D	U		NA					NA			
Fluorene	UNFI	10.000	ug/L	D	U		NA					NA			
Hexachlorobenzene	UNFI	10.000	ug/L	D	UJ		NA					NA			

TABLE C-12A
(Continued)

PHASE I - CHEMICAL PARAMETERS

BORING NUMBER		2037					2037					2037			
SAMPLE NUMBER		003248					003448					003718			
SAMPLING DATE		06/01/88					08/08/88					11/18/88			
CHEMICAL PARAMETERS	FLTD	RESULTS	UNITS	L	VQ	FLTD	RESULTS	UNITS	L	VQ	FLTD	RESULTS	UNITS	L	VQ
Semivolatile Organics															
Hexachlorobutadiene	UNFI	10.000	ug/L	D	U		NA					NA			
Hexachlorocyclopentadiene	UNFI	10.000	ug/L	D	U		NA					NA			
Hexachloroethane	UNFI	10.000	ug/L	D	U		NA					NA			
Indeno(1,2,3-cd)pyrene	UNFI	10.000	ug/L	D	U		NA					NA			
Isophorone	UNFI	10.000	ug/L	D	U		NA					NA			
Methyl parathion	UNFI	1.000	ug/L	C	U		NA					NA			
N-Nitroso-di-n-propylamine	UNFI	10.000	ug/L	D	U		NA					NA			
N-Nitrosodiphenylamine	UNFI	50.000	ug/L	D	U		NA					NA			
Naphthalene	UNFI	10.000	ug/L	D	U		NA					NA			
Nitrobenzene	UNFI	10.000	ug/L	D	U		NA					NA			
Parathion	UNFI	0.500	ug/L	C	U		NA					NA			
Pentachlorophenol	UNFI	50.000	ug/L	D	UJ		NA					NA			
Phenanthrene	UNFI	10.000	ug/L	D	U		NA					NA			
Phenol	UNFI	10.000	ug/L	D	U		NA					NA			
Pyrene	UNFI	10.000	ug/L	D	U		NA					NA			
bis(2-Chloroethoxy)methane	UNFI	10.000	ug/L	D	U		NA					NA			
bis(2-Chloroethyl)ether	UNFI	10.000	ug/L	D	U		NA					NA			
bis(2-Chloroisopropyl) ether	UNFI	10.000	ug/L	D	U		NA					NA			
bis(2-Ethylhexyl) phthalate	UNFI	7.000	ug/L	C	J		NA					NA			
p-Chloroaniline	UNFI	10.000	ug/L	D	U		NA					NA			
Pesticide Organics/PCBs															
4,4'-DDD	UNFI	0.100	ug/L	D	U		NA					NA			
4,4'-DDE	UNFI	0.100	ug/L	D	U		NA					NA			
4,4'-DDT	UNFI	0.100	ug/L	C	NV		NA					NA			
Aldrin	UNFI	0.050	ug/L	C	NV		NA					NA			
Aroclor-1016	UNFI	0.500	ug/L	D	U		NA					NA			
Aroclor-1221	UNFI	0.500	ug/L	D	U		NA					NA			
Aroclor-1232	UNFI	0.500	ug/L	D	U		NA					NA			
Aroclor-1242	UNFI	0.500	ug/L	D	U		NA					NA			
Aroclor-1248	UNFI	0.500	ug/L	D	U		NA					NA			
Aroclor-1254	UNFI	1.000	ug/L	D	U		NA					NA			
Aroclor-1260	UNFI	1.000	ug/L	D	U		NA					NA			
Azinphosmethyl	UNFI	5.000	ug/L	C	U		NA					NA			
Demeton	UNFI	1.000	ug/L	C	U		NA					NA			
Diazinon	UNFI	0.500	ug/L	C	U		NA					NA			
Dieldrin	UNFI	0.050	ug/L	C	NV		NA					NA			
Disulfoton	UNFI	0.500	ug/L	C	U		NA					NA			
Endosulfan II	UNFI	0.100	ug/L	D	U		NA					NA			
Endosulfan sulfate	UNFI	0.100	ug/L	D	U		NA					NA			
Endosulfan-I	UNFI	0.050	ug/L	D	U		NA					NA			

000320

TABLE C-12A
(Continued)

PHASE I - CHEMICAL PARAMETERS

BORING NUMBER	2037					2037					2037				
SAMPLE NUMBER	003248					003448					003718				
SAMPLING DATE	06/01/88					08/08/88					11/18/88				
CHEMICAL PARAMETERS	FLTD	RESULTS	UNITS	L	VQ	FLTD	RESULTS	UNITS	L	VQ	FLTD	RESULTS	UNITS	L	VQ
Pesticide Organics/PCBs															
Endrin	UNFI	0.050	ug/L	C	NV		NA					NA			
Endrin ketone	UNFI	0.100	ug/L	D	U		NA					NA			
Ethion	UNFI	0.500	ug/L	C	U		NA					NA			
Heptachlor	UNFI	0.050	ug/L	C	NV		NA					NA			
Heptachlor epoxide	UNFI	0.050	ug/L	D	U		NA					NA			
Malathion	UNFI	1.000	ug/L	C	U		NA					NA			
Methoxychlor	UNFI	0.500	ug/L	D	U		NA					NA			
Toxaphene	UNFI	1.000	ug/L	D	U		NA					NA			
alpha-BHC	UNFI	0.050	ug/L	D	U		NA					NA			
alpha-Chlordane	UNFI	0.500	ug/L	D	U		NA					NA			
beta-BHC	UNFI	0.050	ug/L	D	U		NA					NA			
delta-BHC	UNFI	0.050	ug/L	D	U		NA					NA			
gamma-BHC (Lindane)	UNFI	0.050	ug/L	C	NV		NA					NA			
gamma-Chlordane	UNFI	0.500	ug/L	D	U		NA					NA			
Dioxin Furan															
2,3,7,8-TCDD	UNFI	0.004	ug/L	C	NV		NA					NA			
2,3,7,8-TCDF	UNFI	0.002	ug/L	C	NV		NA					NA			
Heptachlorodibenzo-p-dioxin	UNFI	0.001	ug/L	C	U		NA					NA			
Heptachlorodibenzofuran	UNFI	0.001	ug/L	C	U		NA					NA			
Hexachlorodibenzo-p-dioxins	UNFI	0.001	ug/L	C	U		NA					NA			
Hexachlorodibenzofuran	UNFI	0.001	ug/L	C	U		NA					NA			
Octachlorodibenzo-p-dioxin	UNFI	0.002	ug/L	C	U		NA					NA			
Octachlorodibenzofuran	UNFI	0.002	ug/L	C	U		NA					NA			
Pentachlorodibenzo-p-dioxin	UNFI	0.001	ug/L	C	U		NA					NA			
Pentachlorodibenzofuran	UNFI	0.001	ug/L	C	U		NA					NA			
Tetrachlorodibenzo-p-dioxin	UNFI	0.001	ug/L	C	U		NA					NA			
Tetrachlorodibenzofuran	UNFI	0.000	ug/L	C	U		NA					NA			
General Chemistry															
Ammonia	UNFI	0.410	mg/L	C	UJ	UNFI	0.100	mg/L	C	U	UNFI	0.170	mg/L	C	-
Chloride	UNFI	25.400	mg/L	C	-		NA				UNFI	22.200	mg/L	C	-
Chloride		NA				UNKN	27.000	mg/L	C	NV		NA			
Fluoride	UNFI	0.510	mg/L	C	-	UNFI	0.200	mg/L	C	NV	UNFI	0.260	mg/L	C	-
Nitrate		NA				UNFI	2.500	mg/L	C	UJ	UNFI	0.100	mg/L	C	R
Nitrate	UNKN	0.150	mg/L	C	J		NA					NA			
Phenols	UNFI	0.170	mg/L	C	J	UNFI	0.010	mg/L	C	U	UNFI	0.010	mg/L	C	U
Phosphate		NA				UNFI	1.000	mg/L	C	-		NA			
Phosphorus	UNFI	0.340	mg/L	C	-		NA					NA			
Phosphorus		NA					NA				UNKN	0.020	mg/L	C	U

000321

6508

TABLE C-12A
(Continued)

PHASE I - CHEMICAL PARAMETERS

BORING NUMBER		2037				2037				2037			
SAMPLE NUMBER		003248				003448				003718			
SAMPLING DATE		06/01/88				08/08/88				11/18/88			
CHEMICAL PARAMETERS	FLTD	RESULTS	UNITS	L	VQ	FLTD	RESULTS	UNITS	L	VQ	FLTD	RESULTS	UNITS	L	VQ
General Chemistry															
Sulfate	UNFI	157.000	mg/L	C	-	UNFI	130.000	mg/L	C	NV		NA			
Sulfate		NA					NA				UNKN	95.200	mg/L	C	J
Total Kjeldahl Nitrogen	UNFI	0.410	mg/L	C	UJ		NA				UNFI	0.390	mg/L	C	-
Total Organic Halides		NA					NA				UNFI	0.050	mg/L	C	U
Total Organic Halides		NA				UNKN	0.050	mg/L	D	R		NA			
Total Organic Nitrogen	UNFI	0.410	mg/L	C	UJ	UNFI	0.100	mg/L	C	U	UNFI	0.220	mg/L	C	-

000282

TABLE C-12A
(Continued)

PHASE I - CHEMICAL PARAMETERS

BORING NUMBER		2037					2037					2037			
SAMPLE NUMBER		003917					066461					066540			
SAMPLING DATE		02/22/89					06/28/89					08/25/89			
CHEMICAL PARAMETERS	FLTD	RESULTS	UNITS	L	VQ	FLTD	RESULTS	UNITS	L	VQ	FLTD	RESULTS	UNITS	L	VQ
Inorganics															
Aluminum		NA				UNKN	0.187	mg/L	C	-		NA			
Arsenic	FILT	0.003	mg/L	C	UJ		NA					NA			
Barium	FILT	0.089	mg/L	C	J		NA					NA			
Barium		NA				UNKN	0.095	mg/L	C	-		NA			
Beryllium		NA				UNKN	0.001	mg/L	C	U		NA			
Cadmium	FILT	0.005	mg/L	C	UJ		NA					NA			
Calcium	FILT	140.000	mg/L	C	J		NA					NA			
Calcium		NA				UNKN	145.000	mg/L	C	-		NA			
Chromium	FILT	0.030	mg/L	C	J		NA					NA			
Chromium		NA				UNKN	0.040	mg/L	C	-		NA			
Cobalt		NA				UNKN	0.010	mg/L	C	U		NA			
Copper	FILT	0.010	mg/L	C	UJ		NA					NA			
Copper		NA				UNKN	0.010	mg/L	C	U		NA			
Iron	FILT	3.100	mg/L	C	J		NA					NA			
Iron		NA				UNKN	3.470	mg/L	C	-		NA			
Lead	FILT	0.002	mg/L	C	UJ		NA					NA			
Lead		NA				UNKN	0.007	mg/L	C	-		NA			
Magnesium	FILT	29.000	mg/L	C	J		NA					NA			
Magnesium		NA				UNKN	34.300	mg/L	C	-		NA			
Manganese	FILT	0.290	mg/L	C	J		NA					NA			
Mercury	FILT	0.000	mg/L	C	UJ		NA					NA			
Molybdenum	FILT	0.010	mg/L	C	J		NA					NA			
Nickel	FILT	0.030	mg/L	C	UJ		NA					NA			
Nickel		NA				UNKN	0.020	mg/L	C	U		NA			
Potassium	FILT	2.600	mg/L	C	J		NA					NA			
Selenium	FILT	0.005	mg/L	C	UJ		NA					NA			
Silver	FILT	0.010	mg/L	C	UJ		NA					NA			
Silver		NA				UNKN	0.020	mg/L	C	-		NA			
Sodium	FILT	13.000	mg/L	C	J		NA					NA			
Vanadium		NA				UNKN	0.027	mg/L	C	-		NA			
Zinc		NA				UNKN	0.185	mg/L	C	-		NA			
Volatile Organics															
1,1-Dichloroethane		NA				UNFI	5.000	ug/L	C	U		NA			
Acetone		NA				UNFI	7.000	ug/L	C	UJ		NA			
Methylene chloride		NA				UNFI	6.000	ug/L	C	U		NA			
Tetrachloroethene		NA				UNFI	5.000	ug/L	C	U		NA			
Toluene		NA				UNFI	5.000	ug/L	C	UJ		NA			
Trichloroethene		NA				UNFI	5.000	ug/L	C	U		NA			
General Chemistry															
Ammonia	UNFI	0.300	mg/L	C	J		NA					NA			

TABLE C-12A
(Continued)

PHASE I - CHEMICAL PARAMETERS

BORING NUMBER	2037					2037					2037				
SAMPLE NUMBER	003917					066461					066540				
SAMPLING DATE	02/22/89					06/28/89					08/25/89				
CHEMICAL PARAMETERS	FLTD	RESULTS	UNITS	L	VQ	FLTD	RESULTS	UNITS	L	VQ	FLTD	RESULTS	UNITS	L	VQ
General Chemistry															
Chloride	UNFI	24.000	mg/L	C	U	UNFI	24.000	mg/L	C	-	UNFI	29.000	mg/L	C	J
Fluoride	UNFI	0.200	mg/L	C	J	UNFI	0.200	mg/L	C	-	UNFI	0.170	mg/L	C	-
Nitrate	UNFI	0.020	mg/L	C	R	UNFI	0.100	mg/L	C	R	UNFI	0.100	mg/L	C	U
Phenols	UNFI	0.012	mg/L	C	J		NA					NA			
Phosphorus	UNFI	0.030	mg/L	C	J		NA					NA			
Sulfate	UNFI	140.000	mg/L	C	J	UNFI	193.000	mg/L	C	-	UNFI	474.000	mg/L	C	NV
Total Kjeldahl Nitrogen	UNFI	0.700	mg/L	C	J		NA					NA			
Total Organic Carbon		NA				UNFI	3.630	mg/L	C	U	UNFI	1.490	mg/L	C	-
Total Organic Halides	UNFI	0.010	mg/L	C	U	UNFI	0.010	mg/L	C	U	UNFI	0.010	mg/L	C	U
Total Organic Nitrogen	UNFI	0.400	mg/L	C	J		NA					NA			

000324

TABLE C-12A
(Continued)

PHASE I - CHEMICAL PARAMETERS

BORING NUMBER	2037					2037					2052				
SAMPLE NUMBER	066570					003249 DUPLICATE					003587				
SAMPLING DATE	08/25/89					06/01/88					09/13/88				
CHEMICAL PARAMETERS	FLTD	RESULTS	UNITS	L	VQ	FLTD	RESULTS	UNITS	L	VQ	FLTD	RESULTS	UNITS	L	VQ
Inorganics															
Aluminum		NA				FILT	0.011	mg/L	C	U	FILT	0.050	mg/L	C	U
Aluminum		NA					NA				UNFI	0.090	mg/L	C	-
Aluminum	UNKN	0.190	mg/L	D	U		NA					NA			
Antimony		NA				FILT	0.047	mg/L	C	U	FILT	0.001	mg/L	C	-
Antimony		NA					NA				UNFI	0.001	mg/L	C	-
Antimony	UNKN	0.030	mg/L	D	U		NA					NA			
Arsenic		NA				FILT	0.002	mg/L	C	U	FILT	0.002	mg/L	C	U
Arsenic		NA					NA				UNFI	0.002	mg/L	C	U
Arsenic	UNKN	0.002	mg/L	D	U		NA					NA			
Barium		NA				FILT	0.083	mg/L	C	J	FILT	0.144	mg/L	C	-
Barium		NA					NA				UNFI	0.139	mg/L	C	J
Barium	UNKN	0.094	mg/L	D	-		NA					NA			
Beryllium		NA				FILT	0.002	mg/L	C	U	FILT	0.001	mg/L	C	U
Beryllium		NA					NA				UNFI	0.001	mg/L	C	U
Beryllium	UNKN	0.002	mg/L	D	U		NA					NA			
Cadmium		NA				FILT	0.001	mg/L	C	U	FILT	0.002	mg/L	C	U
Cadmium		NA					NA				UNFI	0.002	mg/L	C	U
Cadmium	UNKN	0.009	mg/L	D	U		NA					NA			
Calcium		NA				FILT	12.000	mg/L	C	J	FILT	129.000	mg/L	C	-
Calcium		NA					NA				UNFI	123.000	mg/L	C	-
Calcium	UNKN	228.000	mg/L	D	-		NA					NA			
Chromium		NA				FILT	0.002	mg/L	C	U	FILT	0.020	mg/L	C	U
Chromium		NA					NA				UNFI	0.020	mg/L	C	U
Chromium	UNKN	0.035	mg/L	D	U		NA					NA			
Cobalt		NA				FILT	0.005	mg/L	C	U	FILT	0.010	mg/L	C	U
Cobalt		NA					NA				UNFI	0.010	mg/L	C	U
Cobalt	UNKN	0.010	mg/L	D	U		NA					NA			
Copper		NA				FILT	0.007	mg/L	C	U	FILT	0.010	mg/L	C	U
Copper		NA					NA				UNFI	0.010	mg/L	C	U
Copper	UNKN	0.032	mg/L	D	U		NA					NA			
Cyanide	UNKN	0.005	mg/L	D	U	UNKN	0.010	mg/L	C	U	UNKN	0.010	mg/L	C	UJ
Iron		NA				FILT	2.630	mg/L	C	-	FILT	3.610	mg/L	C	-
Iron		NA					NA				UNFI	3.430	mg/L	C	-
Iron	UNKN	5.540	mg/L	D	-		NA					NA			
Lead		NA				FILT	0.002	mg/L	C	U	FILT	0.007	mg/L	C	-
Lead		NA					NA				UNFI	0.003	mg/L	C	J
Lead	UNKN	0.005	mg/L	D	J		NA					NA			
Magnesium		NA				FILT	27.700	mg/L	C	-	FILT	28.600	mg/L	C	-
Magnesium		NA					NA				UNFI	27.300	mg/L	C	-
Magnesium	UNKN	42.200	mg/L	D	-		NA					NA			
Manganese		NA				FILT	0.282	mg/L	C	-	FILT	0.244	mg/L	C	-
Manganese		NA					NA				UNFI	0.226	mg/L	C	-

TABLE C-12A
(Continued)

PHASE I - CHEMICAL PARAMETERS

BORING NUMBER	2037					2037					2052				
SAMPLE NUMBER	066570					003249 DUPLICATE					003587				
SAMPLING DATE	08/25/89					06/01/88					09/13/88				
CHEMICAL PARAMETERS	FLTD	RESULTS	UNITS	L	VQ	FLTD	RESULTS	UNITS	L	VQ	FLTD	RESULTS	UNITS	L	VQ
Inorganics															
Manganese	UNKN	0.378	mg/L	D	-		NA					NA			
Mercury		NA				FILT	0.000	mg/L	C	U	FILT	0.000	mg/L	C	U
Mercury		NA					NA				UNFI	0.000	mg/L	C	U
Mercury	UNKN	0.000	mg/L	D	R		NA					NA			
Molybdenum		NA				FILT	0.033	mg/L	C	U	FILT	0.020	mg/L	C	U
Molybdenum		NA					NA				UNFI	0.020	mg/L	C	U
Nickel		NA				FILT	0.012	mg/L	C	U	FILT	0.020	mg/L	C	U
Nickel		NA					NA				UNFI	0.020	mg/L	C	U
Nickel	UNKN	0.021	mg/L	D	U		NA					NA			
Osmium	UNKN	0.050	mg/L	D	R		NA					NA			
Potassium		NA				FILT	2.760	mg/L	C	J	FILT	1.120	mg/L	C	-
Potassium		NA					NA				UNFI	1.030	mg/L	C	-
Potassium	UNKN	2.840	mg/L	D	-		NA					NA			
Selenium		NA				FILT	0.002	mg/L	C	UJ	FILT	0.002	mg/L	C	U
Selenium		NA					NA				UNFI	0.002	mg/L	C	U
Selenium	UNKN	0.002	mg/L	D	UJ		NA					NA			
Silver		NA				FILT	0.004	mg/L	C	U	FILT	0.001	mg/L	C	U
Silver		NA					NA				UNFI	0.001	mg/L	C	U
Silver	UNKN	0.014	mg/L	D	U		NA					NA			
Sodium		NA				FILT	15.100	mg/L	C	-	FILT	15.800	mg/L	C	-
Sodium		NA					NA				UNFI	14.900	mg/L	C	-
Sodium	UNKN	13.900	mg/L	D	-		NA					NA			
Thallium		NA				FILT	0.004	mg/L	C	UJ	FILT	0.001	mg/L	C	U
Thallium		NA					NA				UNFI	0.001	mg/L	C	U
Thallium	UNKN	0.001	mg/L	D	U		NA					NA			
Tin	UNKN	0.030	mg/L	D	R		NA					NA			
Vanadium		NA				FILT	0.003	mg/L	C	U	FILT	0.010	mg/L	C	U
Vanadium		NA					NA				UNFI	0.015	mg/L	C	-
Vanadium	UNKN	0.030	mg/L	D	U		NA					NA			
Zinc		NA				FILT	0.036	mg/L	C	-	FILT	0.028	mg/L	C	-
Zinc		NA					NA				UNFI	0.027	mg/L	C	-
Zinc	UNKN	0.056	mg/L	D	-		NA					NA			
Volatile Organics															
1,1,1,2-Tetrachloroethane	UNFI	5.000	ug/L	D	U		NA					NA			
1,1,1-Trichloroethane	UNFI	5.000	ug/L	D	UJ	UNFI	5.000	ug/L	D	U	UNFI	5.000	ug/L	D	U
1,1,2,2-Tetrachloroethane	UNFI	5.000	ug/L	D	U	UNFI	5.000	ug/L	D	U	UNFI	5.000	ug/L	D	U
1,1,2-Trichloroethane	UNFI	5.000	ug/L	D	U	UNFI	5.000	ug/L	D	U	UNFI	5.000	ug/L	D	U
1,1-Dichloroethane	UNFI	5.000	ug/L	D	UJ	UNFI	5.000	ug/L	D	U	UNFI	5.000	ug/L	D	U
1,1-Dichloroethene	UNFI	5.000	ug/L	D	U	UNFI	5.000	ug/L	D	U	UNFI	5.000	ug/L	D	U
1,2,3-Trichloropropane	UNFI	5.000	ug/L	D	U		NA					NA			

000326

TABLE C-12A
(Continued)

PHASE I - CHEMICAL PARAMETERS

BORING NUMBER	2037					2037					2052				
SAMPLE NUMBER	066570					003249 DUPLICATE					003587				
SAMPLING DATE	08/25/89					06/01/88					09/13/88				
CHEMICAL PARAMETERS	FLTD	RESULTS	UNITS	L	VQ	FLTD	RESULTS	UNITS	L	VQ	FLTD	RESULTS	UNITS	L	VQ
Volatile Organics															
1,2-Dibromo-3-chloropropane	UNFI	10.000	ug/L	D	U		NA					NA			
1,2-Dibromoethane	UNFI	5.000	ug/L	D	U		NA					NA			
1,2-Dichloroethane	UNFI	5.000	ug/L	D	UJ	UNFI	5.000	ug/L	D	U	UNFI	5.000	ug/L	D	U
1,2-Dichloroethene		NA				UNFI	5.000	ug/L	D	U	UNFI	5.000	ug/L	D	U
1,2-Dichloropropane	UNFI	5.000	ug/L	D	U	UNFI	5.000	ug/L	D	U	UNFI	5.000	ug/L	D	U
1,4-Dioxane	UNFI	1000.000	ug/L	D	U		NA					NA			
2-Butanone	UNFI	10.000	ug/L	D	UJ		NA				UNFI	10.000	ug/L	D	R
2-Butanone		NA				UNKN	10.000	ug/L	D	R		NA			
2-Chloro-1,3-butadiene	UNFI	5.000	ug/L	D	NV		NA					NA			
2-Hexanone	UNFI	10.000	ug/L	D	UJ	UNFI	10.000	ug/L	D	U	UNFI	10.000	ug/L	D	U
3-Chloropropene	UNFI	5.000	ug/L	D	U		NA					NA			
4-Methyl-2-pentanone	UNFI	10.000	ug/L	D	UJ	UNFI	10.000	ug/L	D	U	UNFI	10.000	ug/L	D	U
Acetone	UNFI	10.000	ug/L	D	UJ	UNFI	10.000	ug/L	D	U	UNFI	4.000	ug/L	D	J
Acetonitrile	UNFI	200.000	ug/L	D	U		NA					NA			
Acrolein	UNFI	10.000	ug/L	D	U		NA					NA			
Acrylonitrile	UNFI	10.000	ug/L	D	U		NA					NA			
Benzene	UNFI	5.000	ug/L	D	UJ	UNFI	5.000	ug/L	D	UJ	UNFI	5.000	ug/L	D	U
Bromodichloromethane	UNFI	5.000	ug/L	D	UJ	UNFI	5.000	ug/L	D	U	UNFI	5.000	ug/L	D	U
Bromoform	UNFI	5.000	ug/L	D	UJ	UNFI	5.000	ug/L	D	U	UNFI	5.000	ug/L	D	U
Bromomethane	UNFI	10.000	ug/L	D	UJ	UNFI	10.000	ug/L	D	U	UNFI	10.000	ug/L	D	U
Carbon Tetrachloride	UNFI	5.000	ug/L	D	UJ	UNFI	5.000	ug/L	D	U	UNFI	5.000	ug/L	D	U
Carbon disulfide	UNFI	11.000	ug/L	D	-		NA				UNFI	5.000	ug/L	D	U
Carbon disulfide		NA				UNKN	5.000	ug/L	D	U		NA			
Chlorobenzene		NA				UNFI	5.000	ug/L	D	UJ	UNFI	5.000	ug/L	D	U
Chlorobenzene	UNKN	5.000	ug/L	D	UJ		NA					NA			
Chloroethane	UNFI	10.000	ug/L	D	U	UNFI	10.000	ug/L	D	U	UNFI	10.000	ug/L	D	U
Chloroform	UNFI	5.000	ug/L	D	U	UNFI	5.000	ug/L	D	U	UNFI	5.000	ug/L	D	U
Chloromethane	UNFI	10.000	ug/L	D	U	UNFI	10.000	ug/L	D	U	UNFI	10.000	ug/L	D	U
Dibromochloromethane	UNFI	5.000	ug/L	D	U	UNFI	5.000	ug/L	D	U	UNFI	5.000	ug/L	D	U
Dibromomethane	UNFI	10.000	ug/L	D	U		NA					NA			
Dichlorodifluoromethane	UNFI	200.000	ug/L	D	UJ		NA					NA			
Ethyl cyanide	UNFI	100.000	ug/L	D	UJ		NA					NA			
Ethyl methacrylate	UNFI	10.000	ug/L	D	U		NA					NA			
Ethylbenzene	UNFI	5.000	ug/L	D	UJ	UNFI	5.000	ug/L	D	UJ	UNFI	5.000	ug/L	D	U
Iodomethane	UNFI	5.000	ug/L	D	U		NA					NA			
Isobutyl alcohol	UNFI	3000.000	ug/L	D	U		NA					NA			
Methacrylonitrile	UNFI	10.000	ug/L	D	U		NA					NA			
Methyl methacrylate	UNFI	10.000	ug/L	D	U		NA					NA			
Methylene chloride	UNFI	5.000	ug/L	D	U	UNFI	1.000	ug/L	D	U	UNFI	5.000	ug/L	D	U
Pyridine	UNKN	50000.000	ug/L	D	U		NA					NA			
Styrene	UNFI	5.000	ug/L	D	UJ	UNFI	5.000	ug/L	D	UJ	UNFI	5.000	ug/L	D	U
Tetrachloroethene	UNFI	5.000	ug/L	D	U	UNFI	5.000	ug/L	D	U	UNFI	5.000	ug/L	D	U

TABLE C-12A
(Continued)

PHASE I - CHEMICAL PARAMETERS

BORING NUMBER	2037					2037					2052				
SAMPLE NUMBER	066570					003249 DUPLICATE					003587				
SAMPLING DATE	08/25/89					06/01/88					09/13/88				
CHEMICAL PARAMETERS	FLTD	RESULTS	UNITS	L	VQ	FLTD	RESULTS	UNITS	L	VQ	FLTD	RESULTS	UNITS	L	VQ
Volatile Organics															
Toluene	UNFI	5.000	ug/L	D	UJ	UNFI	5.000	ug/L	D	UJ	UNFI	5.000	ug/L	D	U
Trichloroethene	UNFI	5.000	ug/L	D	U	UNFI	5.000	ug/L	D	U	UNFI	5.000	ug/L	D	U
Trichlorofluoromethane	UNFI	5.000	ug/L	D	U		NA					NA			
Vinyl Acetate	UNFI	10.000	ug/L	D	U	UNFI	10.000	ug/L	D	UJ	UNFI	10.000	ug/L	D	U
Vinyl chloride	UNFI	10.000	ug/L	D	U	UNFI	10.000	ug/L	D	U	UNFI	10.000	ug/L	D	U
Xylenes, Total	UNFI	5.000	ug/L	D	UJ	UNFI	5.000	ug/L	D	UJ	UNFI	5.000	ug/L	D	U
cis-1,3-Dichloropropene	UNFI	5.000	ug/L	D	U	UNFI	5.000	ug/L	D	U	UNFI	5.000	ug/L	D	U
trans-1,2-Dichloroethene	UNFI	5.000	ug/L	D	NV		NA					NA			
trans-1,3-Dichloropropene	UNFI	5.000	ug/L	D	UJ	UNFI	5.000	ug/L	D	U	UNFI	5.000	ug/L	D	U
trans-1,4-Dichloro-2-butene	UNFI	20.000	ug/L	D	U		NA					NA			
Semivolatile Organics															
1,2,4,5-Tetrachlorobenzene	UNFI	10.000	ug/L	D	U		NA					NA			
1,2,4-Trichlorobenzene	UNFI	10.000	ug/L	D	U	UNFI	10.000	ug/L	D	U	UNFI	10.000	ug/L	D	U
1,2-Dichlorobenzene	UNFI	10.000	ug/L	D	U	UNFI	10.000	ug/L	D	U	UNFI	10.000	ug/L	D	U
1,3,5-Trinitrobenzene	UNFI	10.000	ug/L	D	U		NA					NA			
1,3-Dichlorobenzene	UNFI	10.000	ug/L	D	U	UNFI	10.000	ug/L	D	U	UNFI	10.000	ug/L	D	U
1,3-Dinitrobenzene	UNFI	10.000	ug/L	D	U		NA					NA			
1,4-Dichlorobenzene	UNFI	10.000	ug/L	D	U	UNFI	10.000	ug/L	D	U	UNFI	10.000	ug/L	D	U
1,4-Naphthoquinone	UNFI	10.000	ug/L	D	U		NA					NA			
1-Naphthylamine	UNFI	120.000	ug/L	D	UJ		NA					NA			
2,3,4,6-Tetrachlorophenol	UNFI	10.000	ug/L	D	R		NA					NA			
2,4,5-Trichlorophenol	UNFI	50.000	ug/L	D	R	UNFI	50.000	ug/L	D	U	UNFI	50.000	ug/L	D	U
2,4,6-Trichlorophenol	UNFI	10.000	ug/L	D	R	UNFI	10.000	ug/L	D	U	UNFI	10.000	ug/L	D	U
2,4-Dichlorophenol	UNFI	10.000	ug/L	D	R	UNFI	10.000	ug/L	D	U	UNFI	10.000	ug/L	D	U
2,4-Dimethylphenol	UNFI	10.000	ug/L	D	R	UNFI	10.000	ug/L	D	U	UNFI	10.000	ug/L	D	U
2,4-Dinitrophenol	UNFI	50.000	ug/L	D	R	UNFI	50.000	ug/L	D	U	UNFI	50.000	ug/L	D	U
2,4-Dinitrotoluene	UNFI	10.000	ug/L	D	U	UNFI	10.000	ug/L	D	U	UNFI	10.000	ug/L	D	U
2,6-Dichlorophenol	UNFI	10.000	ug/L	D	R		NA					NA			
2,6-Dinitrotoluene	UNFI	10.000	ug/L	D	U	UNFI	10.000	ug/L	D	U	UNFI	10.000	ug/L	D	U
2-Acetylaminofluorene	UNFI	10.000	ug/L	D	U		NA					NA			
2-Chloronaphthalene	UNFI	10.000	ug/L	D	U	UNFI	10.000	ug/L	D	U	UNFI	10.000	ug/L	D	U
2-Chlorophenol	UNFI	10.000	ug/L	D	R	UNFI	10.000	ug/L	D	U	UNFI	10.000	ug/L	D	U
2-Methylnaphthalene	UNFI	10.000	ug/L	D	U	UNFI	10.000	ug/L	D	U	UNFI	10.000	ug/L	D	U
2-Methylphenol	UNFI	10.000	ug/L	D	R	UNFI	10.000	ug/L	D	U	UNFI	10.000	ug/L	D	U
2-Naphthylamine	UNFI	170.000	ug/L	D	UJ		NA					NA			
2-Nitroaniline	UNFI	50.000	ug/L	D	UJ	UNFI	50.000	ug/L	D	U	UNFI	50.000	ug/L	D	UJ
2-Nitrophenol	UNFI	10.000	ug/L	D	R	UNFI	10.000	ug/L	D	U	UNFI	10.000	ug/L	D	U
2-Picoline	UNFI	70.000	ug/L	D	U		NA					NA			
3,3'-Dichlorobenzidine	UNFI	20.000	ug/L	D	U	UNFI	20.000	ug/L	D	U	UNFI	20.000	ug/L	D	U
3,3'-Dimethylbenzidine	UNFI	80.000	ug/L	D	U		NA					NA			

000328

TABLE C-12A
(Continued)

PHASE I - CHEMICAL PARAMETERS

BORING NUMBER		2037					2037					2052			
SAMPLE NUMBER		066570					003249 DUPLICATE					003587			
SAMPLING DATE		08/25/89					06/01/88					09/13/88			
CHEMICAL PARAMETERS	FLTD	RESULTS	UNITS	L	VQ	FLTD	RESULTS	UNITS	L	VQ	FLTD	RESULTS	UNITS	L	VQ
Semivolatile Organics															
3-Methylcholanthrene	UNFI	30.000	ug/L	D	U		NA					NA			
3-Methylphenol	UNFI	10.000	ug/L	D	R		NA					NA			
3-Nitroaniline	UNFI	50.000	ug/L	D	UJ	UNFI	50.000	ug/L	D	U	UNFI	50.000	ug/L	D	R
4,6-Dinitro-2-methylphenol	UNFI	50.000	ug/L	D	U	UNFI	50.000	ug/L	D	U	UNFI	50.000	ug/L	D	U
4-Aminobiphenyl	UNFI	50.000	ug/L	D	UJ		NA					NA			
4-Bromophenyl phenyl ether	UNFI	10.000	ug/L	D	U	UNFI	10.000	ug/L	D	UJ	UNFI	10.000	ug/L	D	U
4-Chloro-3-methylphenol	UNFI	10.000	ug/L	D	U	UNFI	10.000	ug/L	D	U	UNFI	10.000	ug/L	D	U
4-Chlorophenylphenyl ether	UNFI	10.000	ug/L	D	U	UNFI	10.000	ug/L	D	U	UNFI	10.000	ug/L	D	U
4-Methylphenol	UNFI	10.000	ug/L	D	R	UNFI	10.000	ug/L	D	U	UNFI	10.000	ug/L	D	U
4-Nitroaniline	UNFI	50.000	ug/L	D	UJ	UNFI	50.000	ug/L	D	U	UNFI	50.000	ug/L	D	U
4-Nitrophenol	UNFI	50.000	ug/L	D	R	UNFI	50.000	ug/L	D	U	UNFI	50.000	ug/L	D	UJ
4-Nitroquinoline-1-oxide	UNFI	10.000	ug/L	D	UJ		NA					NA			
5-Nitro-o-toluidine	UNFI	20.000	ug/L	D	U		NA					NA			
7,12-Dimethylbenz(a)anthracene	UNFI	20.000	ug/L	D	U		NA					NA			
Acenaphthene	UNFI	10.000	ug/L	D	U	UNFI	10.000	ug/L	D	U	UNFI	10.000	ug/L	D	U
Acenaphthylene	UNFI	10.000	ug/L	D	U		NA				UNFI	10.000	ug/L	D	U
Acenaphthylene		NA				UNKN	10.000	ug/L	D	U		NA			
Acetophenone	UNFI	10.000	ug/L	D	U		NA					NA			
Aniline	UNFI	10.000	ug/L	D	U		NA					NA			
Anthracene	UNFI	10.000	ug/L	D	U	UNFI	10.000	ug/L	D	U	UNFI	10.000	ug/L	D	U
Aramite	UNFI	10.000	ug/L	D	R		NA					NA			
Aramite	UNKN	10.000	ug/L	D	U		NA					NA			
Benzo(a)anthracene	UNFI	10.000	ug/L	D	U	UNFI	10.000	ug/L	D	U	UNFI	10.000	ug/L	D	U
Benzo(a)pyrene	UNFI	10.000	ug/L	D	U	UNFI	10.000	ug/L	D	U	UNFI	10.000	ug/L	D	U
Benzo(b)fluoranthene	UNFI	10.000	ug/L	D	U	UNFI	10.000	ug/L	D	U	UNFI	10.000	ug/L	D	UJ
Benzo(g,h,i)perylene	UNFI	10.000	ug/L	D	U	UNFI	10.000	ug/L	D	UJ	UNFI	10.000	ug/L	D	U
Benzo(k)fluoranthene	UNFI	10.000	ug/L	D	U	UNFI	10.000	ug/L	D	U	UNFI	10.000	ug/L	D	U
Benzoic acid		NA				UNFI	50.000	ug/L	D	U	UNFI	50.000	ug/L	D	UJ
Benzyl alcohol	UNFI	10.000	ug/L	D	U	UNFI	10.000	ug/L	D	U	UNFI	10.000	ug/L	D	UJ
Butyl benzyl phthalate	UNFI	10.000	ug/L	D	U	UNFI	10.000	ug/L	D	U	UNFI	10.000	ug/L	D	UJ
Chrysene	UNFI	10.000	ug/L	D	U	UNFI	10.000	ug/L	D	U	UNFI	10.000	ug/L	D	U
Di-n-butyl phthalate	UNFI	10.000	ug/L	D	U	UNFI	5.000	ug/L	D	U	UNFI	10.000	ug/L	D	UJ
Di-n-octyl phthalate	UNFI	10.000	ug/L	D	U	UNFI	10.000	ug/L	D	U	UNFI	10.000	ug/L	D	U
Diallate	UNFI	10.000	ug/L	D	UJ		NA					NA			
Dibenzo(a,h)anthracene	UNFI	10.000	ug/L	D	U	UNFI	10.000	ug/L	D	U	UNFI	10.000	ug/L	D	U
Dibenzofuran	UNFI	10.000	ug/L	D	U	UNFI	10.000	ug/L	D	U	UNFI	10.000	ug/L	D	U
Diethyl phthalate	UNFI	10.000	ug/L	D	U	UNFI	10.000	ug/L	D	U	UNFI	10.000	ug/L	D	U
Dimethyl phthalate	UNFI	10.000	ug/L	D	U	UNFI	10.000	ug/L	D	U	UNFI	10.000	ug/L	D	U
Diphenylamine	UNFI	10.000	ug/L	D	U		NA					NA			
Ethyl methanesulfonate	UNFI	10.000	ug/L	D	U		NA					NA			
Fluoranthene	UNFI	10.000	ug/L	D	U	UNFI	10.000	ug/L	D	U	UNFI	10.000	ug/L	D	U
Fluorene	UNFI	10.000	ug/L	D	U	UNFI	10.000	ug/L	D	U	UNFI	10.000	ug/L	D	U

TABLE C-12A
(Continued)

PHASE I - CHEMICAL PARAMETERS

BORING NUMBER	2037					2037					2052				
SAMPLE NUMBER	066570					003249 DUPLICATE					003587				
SAMPLING DATE	08/25/89					06/01/88					09/13/88				
CHEMICAL PARAMETERS	FLTD	RESULTS	UNITS	L	VQ	FLTD	RESULTS	UNITS	L	VQ	FLTD	RESULTS	UNITS	L	VQ
Semivolatile Organics															
Hexachlorobenzene	UNFI	10.000	ug/L	D	U	UNFI	10.000	ug/L	D	UJ	UNFI	10.000	ug/L	D	U
Hexachlorobutadiene	UNFI	10.000	ug/L	D	U	UNFI	10.000	ug/L	D	U	UNFI	10.000	ug/L	D	U
Hexachlorocyclopentadiene	UNFI	10.000	ug/L	D	U	UNFI	10.000	ug/L	D	U	UNFI	10.000	ug/L	D	U
Hexachloroethane	UNFI	10.000	ug/L	D	U	UNFI	10.000	ug/L	D	U	UNFI	10.000	ug/L	D	U
Hexachlorophene	UNFI	500.000	ug/L	D	R		NA					NA			
Hexachloropropene	UNFI	20.000	ug/L	D	U		NA					NA			
Indeno(1,2,3-cd)pyrene	UNFI	10.000	ug/L	D	U	UNFI	10.000	ug/L	D	U	UNFI	10.000	ug/L	D	U
Isophorone	UNFI	10.000	ug/L	D	U	UNFI	10.000	ug/L	D	U	UNFI	10.000	ug/L	D	UJ
Isosafrole	UNFI	10.000	ug/L	D	U		NA					NA			
Methapyrilene	UNFI	40.000	ug/L	D	U		NA					NA			
Methyl methanesulfonate	UNFI	10.000	ug/L	D	U		NA					NA			
Methyl parathion		NA				UNFI	1.000	ug/L	C	UJ	UNFI	0.500	ug/L	C	U
N-Nitroso-di-n-propylamine	UNFI	10.000	ug/L	D	U	UNFI	10.000	ug/L	D	U	UNFI	10.000	ug/L	D	UJ
N-Nitrosodi-n-butylamine	UNFI	20.000	ug/L	D	U		NA					NA			
N-Nitrosodiethylamine	UNFI	10.000	ug/L	D	U		NA					NA			
N-Nitrosodimethylamine	UNFI	10.000	ug/L	D	U		NA					NA			
N-Nitrosodiphenylamine	UNFI	2.000	ug/L	D	U	UNFI	50.000	ug/L	D	U	UNFI	10.000	ug/L	D	U
N-Nitrosomethylethylamine	UNFI	10.000	ug/L	D	U		NA					NA			
N-Nitrosomorpholine	UNFI	10.000	ug/L	D	U		NA					NA			
N-Nitrosopiperidine	UNFI	10.000	ug/L	D	U		NA					NA			
N-Nitrosopyrrolidine	UNFI	10.000	ug/L	D	U		NA					NA			
Naphthalene	UNFI	10.000	ug/L	D	U	UNFI	10.000	ug/L	D	U	UNFI	10.000	ug/L	D	U
Nitrobenzene	UNFI	10.000	ug/L	D	U	UNFI	10.000	ug/L	D	U	UNFI	10.000	ug/L	D	UJ
O,O,O-Triethylphosphorothioate	UNFI	10.000	ug/L	D	U		NA					NA			
Parathion		NA				UNFI	0.500	ug/L	C	UJ	UNFI	0.500	ug/L	C	U
Pentachlorobenzene	UNFI	20.000	ug/L	D	U		NA					NA			
Pentachloroethane	UNFI	20.000	ug/L	D	U		NA					NA			
Pentachloronitrobenzene	UNFI	20.000	ug/L	D	U		NA					NA			
Pentachlorophenol	UNFI	50.000	ug/L	D	R	UNFI	50.000	ug/L	D	UJ	UNFI	50.000	ug/L	D	U
Phenacetin	UNFI	10.000	ug/L	D	U		NA					NA			
Phenanthrene	UNFI	10.000	ug/L	D	U	UNFI	10.000	ug/L	D	U	UNFI	10.000	ug/L	D	U
Phenol	UNFI	10.000	ug/L	D	R	UNFI	10.000	ug/L	D	U	UNFI	10.000	ug/L	D	U
Pronamide	UNFI	30.000	ug/L	D	U		NA					NA			
Pyrene	UNFI	10.000	ug/L	D	UJ	UNFI	10.000	ug/L	D	U	UNFI	10.000	ug/L	D	U
Safrole	UNFI	10.000	ug/L	D	UJ		NA					NA			
a,a-Dimethylphenethylamine	UNFI	10.000	ug/L	D	U		NA					NA			
bis(2-Chloroethoxy)methane	UNFI	10.000	ug/L	D	U	UNFI	10.000	ug/L	D	U	UNFI	10.000	ug/L	D	U
bis(2-Chloroethyl)ether	UNFI	10.000	ug/L	D	R	UNFI	10.000	ug/L	D	U	UNFI	10.000	ug/L	D	UJ
bis(2-Chloroisopropyl) ether	UNFI	10.000	ug/L	D	L	UNFI	10.000	ug/L	D	U	UNFI	10.000	ug/L	D	UJ
bis(2-Ethylhexyl) phthalate	UNFI	4.000	ug/L	D	U	UNFI	10.000	ug/L	D	UJ	UNFI	10.000	ug/L	D	U
o-Toluidine	UNFI	10.000	ug/L	D	UJ		NA					NA			
p-Chloroaniline	UNFI	10.000	ug/L	D	UJ	UNFI	10.000	ug/L	D	U	UNFI	10.000	ug/L	D	R

000330

TABLE C-12A
(Continued)

PHASE I - CHEMICAL PARAMETERS

BORING NUMBER		2037					2037					2052			
SAMPLE NUMBER		066570					003249					003587			
							DUPLICATE								
SAMPLING DATE		08/25/89					06/01/88					09/13/88			
CHEMICAL PARAMETERS	FLTD	RESULTS	UNITS	L	VQ	FLTD	RESULTS	UNITS	L	VQ	FLTD	RESULTS	UNITS	L	VQ
Semivolatile Organics															
p-Dimethylaminoazobenzene	UNFI	30.000	ug/L	D	U		NA					NA			
p-Phenylenediamine	UNFI	50.000	ug/L	D	UJ		NA					NA			
Herbicide Organics															
2,4,5-T	UNFI	5.000	ug/L	D	R		NA					NA			
2,4,5-TP (Silvex)	UNFI	0.025	ug/L	D	R		NA					NA			
2,4-D	UNFI	0.050	ug/L	D	R		NA					NA			
Dinoseb	UNFI	20.000	ug/L	D	U		NA					NA			
Pesticide Organics/PCBs															
4,4'-DDD	UNFI	0.400	ug/L	D	U	UNFI	0.100	ug/L	D	U	UNFI	0.100	ug/L	D	U
4,4'-DDE	UNFI	0.400	ug/L	D	U	UNFI	0.100	ug/L	D	U	UNFI	0.100	ug/L	D	U
4,4'-DDT	UNFI	0.400	ug/L	D	U	UNFI	0.100	ug/L	D	U	UNFI	0.100	ug/L	D	U
Aldrin	UNFI	0.200	ug/L	D	U	UNFI	0.050	ug/L	D	U	UNFI	0.050	ug/L	D	U
Aroclor-1016	UNFI	2.000	ug/L	D	U	UNFI	0.500	ug/L	D	U	UNFI	0.500	ug/L	D	U
Aroclor-1221	UNFI	0.500	ug/L	D	R	UNFI	0.500	ug/L	D	U	UNFI	0.500	ug/L	D	U
Aroclor-1221	UNKN	2.000	ug/L	D	U		NA					NA			
Aroclor-1232	UNFI	2.000	ug/L	D	U	UNFI	0.500	ug/L	D	U	UNFI	0.500	ug/L	D	U
Aroclor-1242	UNFI	2.000	ug/L	D	U	UNFI	0.500	ug/L	D	U	UNFI	0.500	ug/L	D	U
Aroclor-1248	UNFI	2.000	ug/L	D	U	UNFI	0.500	ug/L	D	U	UNFI	0.500	ug/L	D	U
Aroclor-1254	UNFI	4.000	ug/L	D	U	UNFI	1.000	ug/L	D	U	UNFI	1.000	ug/L	D	U
Aroclor-1260	UNFI	4.000	ug/L	D	U	UNFI	1.000	ug/L	D	U	UNFI	1.000	ug/L	D	U
Aroclor-1260	UNKN	1.000	ug/L	D	R		NA					NA			
Azinphosmethyl		NA				UNFI	5.000	ug/L	C	UJ	UNFI	5.000	ug/L	C	U
Demeton		NA				UNFI	1.000	ug/L	C	UJ	UNFI	0.500	ug/L	C	U
Diazinon		NA				UNFI	0.500	ug/L	C	UJ	UNFI	0.500	ug/L	C	U
Dieldrin	UNFI	0.400	ug/L	D	U	UNFI	0.050	ug/L	D	U	UNFI	0.100	ug/L	D	U
Disulfoton		NA				UNFI	0.500	ug/L	C	UJ	UNFI	0.500	ug/L	C	U
Endosulfan II	UNFI	0.400	ug/L	D	U	UNFI	0.100	ug/L	D	U	UNFI	0.100	ug/L	D	U
Endosulfan sulfate	UNFI	0.400	ug/L	D	U	UNFI	0.100	ug/L	D	U	UNFI	0.100	ug/L	D	U
Endosulfan-I	UNFI	0.200	ug/L	D	U	UNFI	0.050	ug/L	D	U	UNFI	0.050	ug/L	D	U
Endrin	UNFI	0.400	ug/L	D	U	UNFI	0.050	ug/L	D	U	UNFI	0.100	ug/L	D	U
Endrin ketone	UNFI	0.400	ug/L	D	U	UNFI	0.100	ug/L	D	U	UNFI	0.100	ug/L	D	U
Ethion		NA				UNFI	0.500	ug/L	C	UJ	UNFI	0.500	ug/L	C	U
Heptachlor	UNFI	0.200	ug/L	D	U	UNFI	0.050	ug/L	D	U	UNFI	0.050	ug/L	D	U
Heptachlor epoxide	UNFI	0.200	ug/L	D	U	UNFI	0.050	ug/L	D	U	UNFI	0.050	ug/L	D	U
Isodrin	UNFI	0.200	ug/L	D	U		NA					NA			
Kepone	UNFI	0.400	ug/L	D	U		NA					NA			
Malathion		NA				UNFI	1.000	ug/L	C	UJ	UNFI	0.500	ug/L	C	U
Methoxychlor	UNFI	2.000	ug/L	D	U		NA				UNFI	0.500	ug/L	D	U

TABLE C-12A
(Continued)

PHASE I - CHEMICAL PARAMETERS

BORING NUMBER		2037					2037					2052			
SAMPLE NUMBER		066570					003249 DUPLICATE					003587			
SAMPLING DATE		08/25/89					06/01/88					09/13/88			
CHEMICAL PARAMETERS	FLTD	RESULTS	UNITS	L	VQ	FLTD	RESULTS	UNITS	L	VQ	FLTD	RESULTS	UNITS	L	VQ
Pesticide Organics/PCBs															
Methoxychlor		NA				UNKN	0.500	ug/L	D	U		NA			
Toxaphene	UNFI	4.000	ug/L	D	U		NA				UNFI	1.000	ug/L	D	U
Toxaphene		NA				UNKN	1.000	ug/L	D	U		NA			
alpha-BHC	UNFI	0.200	ug/L	D	U	UNFI	0.050	ug/L	D	U	UNFI	0.050	ug/L	D	U
alpha-Chlordane	UNFI	0.500	ug/L	D	R	UNFI	0.500	ug/L	D	U	UNFI	0.500	ug/L	D	U
alpha-Chlordane	UNKN	2.000	ug/L	D	U		NA					NA			
beta-BHC	UNFI	0.200	ug/L	D	U	UNFI	0.050	ug/L	D	U	UNFI	0.050	ug/L	D	U
delta-BHC	UNFI	0.200	ug/L	D	U	UNFI	0.050	ug/L	D	U	UNFI	0.050	ug/L	D	U
gamma-BHC (Lindane)	UNFI	0.200	ug/L	D	U	UNFI	0.050	ug/L	D	U	UNFI	0.050	ug/L	D	U
gamma-Chlordane	UNFI	2.000	ug/L	D	U	UNFI	0.500	ug/L	D	U	UNFI	0.500	ug/L	D	U
Dioxin Furan															
2,3,7,8-TCDD	UNFI	0.001	ug/L	E	U	UNFI	0.008	ug/L	C	NV	UNFI	0.001	ug/L	C	U
2,3,7,8-TCDF		NA				UNFI	0.006	ug/L	C	NV	UNFI	0.000	ug/L	C	U
Heptachlorodibenzo-p-dioxin		NA				UNFI	0.001	ug/L	C	U	UNFI	0.000	ug/L	C	U
Heptachlorodibenzofuran		NA				UNFI	0.001	ug/L	C	U	UNFI	0.000	ug/L	C	U
Hexachlorodibenzo-p-dioxin	UNFI	0.000	ug/L	E	U		NA					NA			
Hexachlorodibenzo-p-dioxins		NA				UNFI	0.002	ug/L	C	U	UNFI	0.001	ug/L	C	U
Hexachlorodibenzofuran	UNFI	0.000	ug/L	E	-	UNFI	0.002	ug/L	C	U	UNFI	0.000	ug/L	C	U
Octachlorodibenzo-p-dioxin		NA				UNFI	0.003	ug/L	C	U	UNFI	0.001	ug/L	C	U
Octachlorodibenzofuran		NA				UNFI	0.006	ug/L	C	U	UNFI	0.001	ug/L	C	U
Pentachlorodibenzo-p-dioxin	UNFI	0.000	ug/L	E	UJ	UNFI	0.001	ug/L	C	U	UNFI	0.001	ug/L	C	U
Pentachlorodibenzofuran	UNFI	0.000	ug/L	E	-	UNFI	0.002	ug/L	C	U	UNFI	0.000	ug/L	C	U
Tetrachlorodibenzo-p-dioxin		NA				UNFI	0.001	ug/L	C	U	UNFI	0.001	ug/L	C	U
Tetrachlorodibenzo-p-dioxin	UNKN	0.000	ug/L	E	UJ		NA					NA			
Tetrachlorodibenzofuran	UNFI	0.000	ug/L	E	-	UNFI	0.002	ug/L	C	U	UNFI	0.001	ug/L	C	U
General Chemistry															
Ammonia		NA				UNFI	0.410	mg/L	C	UJ	UNFI	0.320	mg/L	C	-
Chloride		NA				UNFI	29.500	mg/L	C	-	UNFI	30.000	mg/L	C	-
Fluoride		NA				UNFI	0.510	mg/L	C	-	UNFI	0.320	mg/L	C	-
Nitrate		NA				UNFI	0.150	mg/L	C	J	UNFI	0.170	mg/L	C	R
Phenols		NA				UNFI	0.150	mg/L	C	J	UNFI	0.020	mg/L	C	J
Phosphorus		NA				UNFI	0.320	mg/L	C	-	UNFI	0.010	mg/L	C	U
Sulfate		NA				UNFI	165.000	mg/L	C	-		NA			
Sulfate		NA					NA				UNKN	178.000	mg/L	C	-
Sulfide	UNFI	0.500	mg/L	C	UJ		NA					NA			
Total Kjeldahl Nitrogen		NA				UNFI	1.000	mg/L	C	J		NA			
Total Organic Halides		NA					NA				UNFI	0.050	mg/L	C	U
Total Organic Nitrogen		NA				UNFI	1.000	mg/L	C	J	UNFI	0.400	mg/L	C	-

TABLE C-12A
(Continued)

PHASE I - CHEMICAL PARAMETERS

BORING NUMBER	2052					2052					2052				
SAMPLE NUMBER	003791					003892					003476 DUPLICATE				
SAMPLING DATE	12/16/88					02/08/89					12/16/88				
CHEMICAL PARAMETERS	FLTD	RESULTS	UNITS	L	VQ	FLTD	RESULTS	UNITS	L	VQ	FLTD	RESULTS	UNITS	L	VQ
Inorganics															
Arsenic	FILT	0.002	mg/L	C	UJ	FILT	0.002	mg/L	C	UJ	FILT	0.002	mg/L	C	UJ
Barium	FILT	0.150	mg/L	C	-	FILT	0.138	mg/L	C	J	FILT	0.156	mg/L	C	-
Cadmium	FILT	0.002	mg/L	C	U	FILT	0.007	mg/L	C	J	FILT	0.002	mg/L	C	U
Calcium	FILT	146.000	mg/L	C	-	FILT	142.000	mg/L	C	J	FILT	147.000	mg/L	C	-
Chromium	FILT	0.020	mg/L	C	U	FILT	0.031	mg/L	C	J	FILT	0.020	mg/L	C	U
Copper	FILT	0.010	mg/L	C	U	FILT	0.012	mg/L	C	J	FILT	0.010	mg/L	C	U
Iron	FILT	4.210	mg/L	C	J	FILT	3.770	mg/L	C	J	FILT	4.190	mg/L	C	J
Lead	FILT	0.002	mg/L	C	UJ	FILT	0.002	mg/L	C	UJ	FILT	0.002	mg/L	C	UJ
Magnesium	FILT	32.600	mg/L	C	-	FILT	32.900	mg/L	C	J	FILT	32.600	mg/L	C	-
Manganese	FILT	0.270	mg/L	C	-	FILT	0.247	mg/L	C	J	FILT	0.259	mg/L	C	-
Mercury	FILT	0.000	mg/L	C	U	FILT	0.000	mg/L	C	UJ	FILT	0.000	mg/L	C	U
Molybdenum	FILT	0.048	mg/L	C	U	FILT	0.020	mg/L	C	UJ	FILT	0.027	mg/L	C	U
Nickel	FILT	0.020	mg/L	C	U	FILT	0.020	mg/L	C	UJ	FILT	0.020	mg/L	C	U
Potassium	FILT	0.917	mg/L	C	-	FILT	1.160	mg/L	C	J	FILT	0.917	mg/L	C	-
Selenium	FILT	0.002	mg/L	C	UJ	FILT	0.004	mg/L	C	J	FILT	0.002	mg/L	C	UJ
Silver	FILT	0.001	mg/L	C	R	FILT	0.001	mg/L	C	UJ	FILT	0.001	mg/L	C	R
Sodium	FILT	14.800	mg/L	C	-	FILT	14.200	mg/L	C	J	FILT	15.100	mg/L	C	-
General Chemistry															
Ammonia	UNFI	0.680	mg/L	C	-	UNFI	0.320	mg/L	C	J	UNFI	0.530	mg/L	C	-
Chloride	UNFI	12.000	mg/L	C	J	UNFI	22.000	mg/L	C	J	UNFI	8.000	mg/L	C	J
Fluoride	UNFI	0.360	mg/L	C	-	UNFI	0.230	mg/L	C	J	UNFI	0.320	mg/L	C	-
Nitrate	UNFI	0.100	mg/L	C	R	UNFI	0.100	mg/L	C	R	UNFI	0.100	mg/L	C	R
Phenols	UNFI	0.010	mg/L	C	U	UNFI	0.010	mg/L	C	UJ	UNFI	0.010	mg/L	C	U
Phosphorus	UNFI	6.990	mg/L	C	-	UNFI	0.480	mg/L	C	J	UNFI	1.890	mg/L	C	-
Sulfate	UNFI	125.000	mg/L	C	J	UNFI	153.000	mg/L	C	J	UNFI	120.000	mg/L	C	J
Total Kjeldahl Nitrogen	UNFI	3.630	mg/L	C	J	UNFI	0.651	mg/L	C	J	UNFI	1.940	mg/L	C	J
Total Organic Halides	UNFI	0.017	mg/L	C	J	UNFI	0.018	mg/L	C	J	UNFI	0.018	mg/L	C	J
Total Organic Nitrogen	UNFI	2.950	mg/L	C	-	UNFI	0.331	mg/L	C	J	UNFI	1.410	mg/L	C	-

TABLE C-12A
(Continued)

PHASE I - CHEMICAL PARAMETERS

BORING NUMBER	3037					3037					3037				
SAMPLE NUMBER	003152					003447					003717				
SAMPLING DATE	05/05/88					08/08/88					11/18/88				
CHEMICAL PARAMETERS	FLTD	RESULTS	UNITS	L	VQ	FLTD	RESULTS	UNITS	L	VQ	FLTD	RESULTS	UNITS	L	VQ
Inorganics															
Arsenic		NA				*F	0.010	mg/L	D	R		NA			
Arsenic	FILT	0.200	mg/L	C	U		NA				FILT	0.002	mg/L	C	UJ
Barium		NA				*F	0.200	mg/L	D	R		NA			
Barium	FILT	0.060	mg/L	C	-		NA				FILT	0.049	mg/L	C	-
Cadmium		NA				*F	0.005	mg/L	D	R		NA			
Cadmium	FILT	0.005	mg/L	C	U		NA				FILT	0.002	mg/L	C	U
Calcium		NA				*F	280.000	mg/L	D	R		NA			
Calcium	FILT	254.000	mg/L	C	-		NA				FILT	291.000	mg/L	C	-
Chromium		NA				*F	0.010	mg/L	D	R		NA			
Chromium	FILT	0.020	mg/L	C	U		NA				FILT	0.020	mg/L	C	U
Copper		NA				*F	0.030	mg/L	D	R		NA			
Copper	FILT	0.010	mg/L	C	U		NA				FILT	0.010	mg/L	C	U
Iron		NA				*F	15.000	mg/L	D	R		NA			
Iron	FILT	3.020	mg/L	C	-		NA				FILT	16.900	mg/L	C	-
Lead		NA				*F	0.005	mg/L	D	R		NA			
Lead	FILT	0.050	mg/L	C	U		NA				FILT	0.002	mg/L	C	R
Magnesium		NA				*F	61.000	mg/L	D	R		NA			
Magnesium	FILT	61.300	mg/L	C	-		NA				FILT	67.200	mg/L	C	-
Manganese		NA				*F	0.680	mg/L	D	R		NA			
Manganese	FILT	0.650	mg/L	C	-		NA				FILT	0.722	mg/L	C	-
Mercury		NA				*F	0.000	mg/L	C	R		NA			
Mercury	FILT	0.000	mg/L	C	U		NA				FILT	0.000	mg/L	C	U
Molybdenum		NA				*F	0.050	mg/L	D	R		NA			
Molybdenum	FILT	0.020	mg/L	C	U		NA				FILT	0.020	mg/L	C	U
Nickel		NA				*F	0.040	mg/L	D	R		NA			
Nickel	FILT	0.040	mg/L	C	-		NA				FILT	0.020	mg/L	C	U
Potassium		NA				*F	12.000	mg/L	D	R		NA			
Potassium	FILT	15.900	mg/L	C	-		NA				FILT	14.500	mg/L	C	-
Selenium		NA				*F	0.005	mg/L	D	R		NA			
Selenium	FILT	0.200	mg/L	C	U		NA				FILT	0.002	mg/L	C	UJ
Silver		NA				*F	0.010	mg/L	D	R		NA			
Silver	FILT	0.010	mg/L	C	U		NA				FILT	0.001	mg/L	C	U
Sodium		NA				*F	59.000	mg/L	D	R		NA			
Sodium	FILT	62.700	mg/L	C	-		NA				FILT	51.200	mg/L	C	-
General Chemistry															
Ammonia	UNFI	1.820	mg/L	C	J	UNFI	13.000	mg/L	C	-	UNFI	18.800	mg/L	C	-
Chloride	UNFI	4.000	mg/L	C	-	UNFI	230.000	mg/L	C	NV	UNFI	212.000	mg/L	C	-
Fluoride	UNFI	0.350	mg/L	C	-	UNFI	0.100	mg/L	C	NV	UNFI	0.145	mg/L	C	-
Nitrate	UNFI	0.100	mg/L	C	R	UNFI	5.000	mg/L	C	UJ	UNFI	0.100	mg/L	C	R
Phenols	UNFI	0.010	mg/L	C	-	UNFI	0.010	mg/L	C	U	UNFI	0.010	mg/L	C	U

000134

TABLE C-12A
(Continued)

PHASE I - CHEMICAL PARAMETERS

BORING NUMBER	3037					3037					3037				
SAMPLE NUMBER	003152					003447					003717				
SAMPLING DATE	05/05/88					08/08/88					11/18/88				
CHEMICAL PARAMETERS	FLTD	RESULTS	UNITS	L	VQ	FLTD	RESULTS	UNITS	L	VQ	FLTD	RESULTS	UNITS	L	VQ
General Chemistry															
Phosphate		NA				UNFI	0.880	mg/L	C	-		NA			
Phosphorus	UNFI	0.100	mg/L	C	-		NA				UNFI	0.020	mg/L	C	U
Sulfate	UNFI	475.000	mg/L	C	-	UNFI	440.000	mg/L	C	NV	UNFI	394.000	mg/L	C	J
Total Kjeldahl Nitrogen	UNFI	3.390	mg/L	C	J		NA				UNFI	22.800	mg/L	C	-
Total Organic Halides		NA				UNFI	0.050	mg/L	D	R	UNFI	0.550	mg/L	C	U
Total Organic Nitrogen	UNFI	1.570	mg/L	C	J	UNFI	0.100	mg/L	C	U	UNFI	4.000	mg/L	C	-

TABLE C-12A
(Continued)

PHASE I - CHEMICAL PARAMETERS

BORING NUMBER		3037					3037					3037		
SAMPLE NUMBER		003916					066462					066541		
SAMPLING DATE		02/22/89					06/28/89					08/25/89		
CHEMICAL PARAMETERS	FLTD	RESULTS	UNITS	L	VQ	FLTD	RESULTS	UNITS	L	VQ	FLTD	RESULTS	UNITS	L	VQ
Inorganics															
Aluminum		NA				UNKN	0.201	mg/L	C	-		NA			
Arsenic	FILT	0.003	mg/L	C	UJ		NA					NA			
Barium	FILT	0.045	mg/L	C	J		NA					NA			
Barium		NA				UNKN	0.047	mg/L	C	-		NA			
Beryllium		NA				UNKN	0.001	mg/L	C	U		NA			
Cadmium	FILT	0.007	mg/L	C	J		NA					NA			
Calcium	FILT	280.000	mg/L	C	J		NA					NA			
Calcium		NA				UNKN	277.000	mg/L	C	-		NA			
Chromium	FILT	0.050	mg/L	C	J		NA					NA			
Chromium		NA				UNKN	0.057	mg/L	C	-		NA			
Cobalt		NA				UNKN	0.010	mg/L	C	U		NA			
Copper	FILT	0.010	mg/L	C	J		NA					NA			
Copper		NA				UNKN	0.010	mg/L	C	U		NA			
Iron	FILT	14.000	mg/L	C	J		NA					NA			
Iron		NA				UNKN	13.090	mg/L	C	-		NA			
Lead	FILT	0.002	mg/L	C	UJ		NA					NA			
Lead		NA				UNKN	0.002	mg/L	C	-		NA			
Magnesium	FILT	61.000	mg/L	C	J		NA					NA			
Magnesium		NA				UNKN	62.900	mg/L	C	-		NA			
Manganese	FILT	0.700	mg/L	C	J		NA					NA			
Mercury	FILT	0.000	mg/L	C	UJ		NA					NA			
Molybdenum	FILT	0.020	mg/L	C	J		NA					NA			
Nickel	FILT	0.030	mg/L	C	UJ		NA					NA			
Nickel		NA				UNKN	0.028	mg/L	C	-		NA			
Potassium	FILT	13.000	mg/L	C	J		NA					NA			
Selenium	FILT	0.005	mg/L	C	UJ		NA					NA			
Silver	FILT	0.010	mg/L	C	J		NA					NA			
Silver		NA				UNKN	0.021	mg/L	C	-		NA			
Sodium	FILT	55.000	mg/L	C	J		NA					NA			
Vanadium		NA				UNKN	0.038	mg/L	C	-		NA			
Zinc		NA				UNKN	0.267	mg/L	C	-		NA			
Volatile Organics															
1,1-Dichloroethane		NA				UNFI	5.000	ug/L	C	U		NA			
Acetone		NA				UNFI	8.000	ug/L	C	UJ		NA			
Methylene chloride		NA				UNFI	5.000	ug/L	C	U		NA			
Tetrachloroethene		NA				UNFI	5.000	ug/L	C	U		NA			
Toluene		NA				UNFI	5.000	ug/L	C	UJ		NA			
Trichloroethene		NA				UNFI	5.000	ug/L	C	U		NA			
General Chemistry															
Ammonia	UNFI	16.000	mg/L	C	J		NA					NA			

000336

TABLE C-12A
(Continued)

PHASE I - CHEMICAL PARAMETERS

BORING NUMBER	3037					3037					3037				
SAMPLE NUMBER	003916					066462					066541				
SAMPLING DATE	02/22/89					06/28/89					08/25/89				
CHEMICAL PARAMETERS	FLTD	RESULTS	UNITS	L	VQ	FLTD	RESULTS	UNITS	L	VQ	FLTD	RESULTS	UNITS	L	VQ
General Chemistry															
Chloride	UNFI	200.000	mg/L	C	J	UNFI	206.000	mg/L	C	-	UNFI	250.000	mg/L	C	J
Fluoride	UNFI	0.100	mg/L	C	J	UNFI	0.100	mg/L	C	-	UNFI	0.100	mg/L	C	-
Nitrate	UNFI	0.020	mg/L	C	J	UNFI	1.320	mg/L	C	J	UNFI	0.582	mg/L	C	-
Phenols	UNFI	0.005	mg/L	C	UJ		NA					NA			
Phosphorus	UNFI	0.010	mg/L	C	J		NA					NA			
Sulfate	UNFI	390.000	mg/L	C	J	UNFI	467.000	mg/L	C	-	UNFI	475.000	mg/L	C	NV
Total Kjeldahl Nitrogen	UNFI	27.000	mg/L	C	J		NA					NA			
Total Organic Carbon		NA				UNFI	6.450	mg/L	C	U	UNFI	2.010	mg/L	C	-
Total Organic Halides	UNFI	0.027	mg/L	C	-	UNFI	0.010	mg/L	C	U	UNFI	0.013	mg/L	C	J
Total Organic Nitrogen	UNFI	12.000	mg/L	C	J		NA					NA			

TABLE C-12A
(Continued)

PHASE I - CHEMICAL PARAMETERS

BORING NUMBER	3037					3037				
SAMPLE NUMBER	066571					066928				
SAMPLING DATE	08/25/89					08/27/90				
CHEMICAL PARAMETERS	FLTD	RESULTS	UNITS	L	VQ	FLTD	RESULTS	UNITS	L	VQ
Inorganics										
Aluminum	UNKN	0.224	mg/L	D	-		NA			
Antimony	UNKN	0.030	mg/L	D	U		NA			
Arsenic	UNKN	0.002	mg/L	D	U		NA			
Barium	UNKN	0.052	mg/L	D	-		NA			
Beryllium	UNKN	0.002	mg/L	D	U		NA			
Cadmium	UNKN	0.009	mg/L	D	U		NA			
Calcium	UNKN	305.000	mg/L	D	-		NA			
Chromium	UNKN	0.037	mg/L	D	U		NA			
Cobalt	UNKN	0.010	mg/L	D	U		NA			
Copper	UNKN	0.010	mg/L	D	U		NA			
Cyanide	UNKN	0.005	mg/L	D	U		NA			
Iron	UNKN	14.600	mg/L	D	-		NA			
Lead	UNKN	0.003	mg/L	D	J		NA			
Magnesium	UNKN	65.700	mg/L	D	-		NA			
Manganese	UNKN	0.651	mg/L	D	-		NA			
Mercury	UNKN	0.000	mg/L	D	R		NA			
Nickel	UNKN	0.028	mg/L	D	U		NA			
Osmium	UNKN	0.050	mg/L	D	R		NA			
Potassium	UNKN	13.000	mg/L	D	-		NA			
Selenium	UNKN	0.002	mg/L	D	UJ		NA			
Silver	UNKN	0.011	mg/L	D	U		NA			
Sodium	UNKN	57.100	mg/L	D	-		NA			
Thallium	UNKN	0.001	mg/L	D	U		NA			
Tin	UNKN	0.030	mg/L	D	R		NA			
Vanadium	UNKN	0.034	mg/L	D	U		NA			
Zinc	UNKN	0.039	mg/L	D	-		NA			
Volatile Organics										
1,1,1,2-Tetrachloroethane	UNFI	5.000	ug/L	D	U		NA			
1,1,1-Trichloroethane	UNFI	5.000	ug/L	D	UJ	UNFI	5.000	ug/L	D	UJ
1,1,2,2-Tetrachloroethane	UNFI	5.000	ug/L	D	U	UNFI	5.000	ug/L	D	U
1,1,2-Trichloroethane	UNFI	5.000	ug/L	D	U		NA			
1,1,2-Trichloroethane		NA				UNKN	5.000	ug/L	D	U
1,1-Dichloroethane	UNFI	5.000	ug/L	D	UJ		NA			
1,1-Dichloroethane		NA				UNKN	5.000	ug/L	D	U
1,1-Dichloroethene	UNFI	5.000	ug/L	D	U	UNFI	5.000	ug/L	D	U
1,2,3-Trichloropropane	UNFI	5.000	ug/L	D	U		NA			
1,2-Dibromo-3-chloropropane	UNFI	10.000	ug/L	D	U		NA			
1,2-Dibromoethane	UNFI	5.000	ug/L	D	U		NA			
1,2-Dichloroethane	UNFI	5.000	ug/L	D	UJ	UNFI	5.000	ug/L	D	UJ
1,2-Dichloroethene		NA				UNFI	5.000	ug/L	D	U

000328

TABLE C-12A
(Continued)

PHASE I - CHEMICAL PARAMETERS

BORING NUMBER		3037					3037			
SAMPLE NUMBER		066571					066928			
SAMPLING DATE		08/25/89					08/27/90			
CHEMICAL PARAMETERS	FLTD	RESULTS	UNITS	L	VQ	FLTD	RESULTS	UNITS	L	VQ
Volatile Organics										
1,2-Dichloropropane	UNFI	5.000	ug/L	D	U	UNFI	5.000	ug/L	D	U
1,4-Dioxane	UNFI	1000.000	ug/L	D	U		NA			
2-Butanone	UNFI	10.000	ug/L	D	UJ	UNFI	10.000	ug/L	D	UJ
2-Chloro-1,3-butadiene	UNFI	5.000	ug/L	D	NV		NA			
2-Hexanone	UNFI	10.000	ug/L	D	UJ	UNFI	2.000	ug/L	D	J
3-Chloropropene	UNFI	5.000	ug/L	D	U		NA			
4-Methyl-2-pentanone	UNFI	10.000	ug/L	D	UJ	UNFI	10.000	ug/L	D	U
Acetone	UNFI	10.000	ug/L	D	UJ	UNFI	29.000	ug/L	D	-
Acetonitrile	UNFI	200.000	ug/L	D	U		NA			
Acrolein	UNFI	10.000	ug/L	D	U		NA			
Acrylonitrile	UNFI	10.000	ug/L	D	U		NA			
Benzene	UNFI	5.000	ug/L	D	UJ	UNFI	5.000	ug/L	D	UJ
Bromodichloromethane	UNFI	5.000	ug/L	D	UJ	UNFI	5.000	ug/L	D	U
Bromoform	UNFI	5.000	ug/L	D	U	UNFI	5.000	ug/L	D	U
Bromomethane	UNFI	10.000	ug/L	D	UJ	UNFI	10.000	ug/L	D	U
Carbon Tetrachloride	UNFI	5.000	ug/L	D	UJ	UNFI	5.000	ug/L	D	UJ
Carbon disulfide	UNFI	5.000	ug/L	D	U	UNFI	5.000	ug/L	D	U
Chlorobenzene	UNFI	5.000	ug/L	D	UJ	UNFI	5.000	ug/L	D	UJ
Chloroethane	UNFI	10.000	ug/L	D	U	UNFI	10.000	ug/L	D	U
Chloroform	UNFI	5.000	ug/L	D	U	UNFI	5.000	ug/L	D	U
Chloromethane	UNFI	10.000	ug/L	D	U		NA			
Chloromethane		NA				UNKN	10.000	ug/L	D	U
Dibromochloromethane	UNFI	5.000	ug/L	D	U	UNFI	5.000	ug/L	D	U
Dibromomethane	UNFI	10.000	ug/L	D	U		NA			
Dichlorodifluoromethane	UNFI	200.000	ug/L	D	U		NA			
Ethyl cyanide	UNFI	100.000	ug/L	D	UJ		NA			
Ethyl methacrylate	UNFI	10.000	ug/L	D	U		NA			
Ethylbenzene	UNFI	5.000	ug/L	D	UJ		NA			
Ethylbenzene		NA				UNKN	5.000	ug/L	D	UJ
Iodomethane	UNFI	5.000	ug/L	D	U		NA			
Isobutyl alcohol	UNFI	3000.000	ug/L	D	U		NA			
Methacrylonitrile	UNFI	10.000	ug/L	D	U		NA			
Methyl methacrylate	UNFI	10.000	ug/L	D	U		NA			
Methylene chloride	UNFI	2.000	ug/L	D	U	UNFI	11.000	ug/L	D	U
Pyridine	UNFI	50000.000	ug/L	D	U		NA			
Styrene	UNFI	5.000	ug/L	D	UJ	UNFI	5.000	ug/L	D	UJ
Tetrachloroethene	UNFI	5.000	ug/L	D	U	UNFI	5.000	ug/L	D	U
Toluene	UNFI	5.000	ug/L	D	UJ		NA			
Toluene		NA				UNKN	5.000	ug/L	D	UJ
Trichloroethene	UNFI	5.000	ug/L	D	U	UNFI	5.000	ug/L	D	U
Trichlorofluoromethane	UNFI	5.000	ug/L	D	U		NA			
Vinyl Acetate	UNFI	10.000	ug/L	D	U	UNFI	10.000	ug/L	D	U

000339

6508

TABLE C-12A
(Continued)

PHASE I - CHEMICAL PARAMETERS

BORING NUMBER		3037					3037				
SAMPLE NUMBER		066571					066928				
SAMPLING DATE		08/25/89					08/27/90				
CHEMICAL PARAMETERS	FLTD	RESULTS	UNITS	L	VQ	FLTD	RESULTS	UNITS	L	VQ
Volatile Organics										
Vinyl chloride	UNFI	10.000	ug/L	D	U	UNFI	10.000	ug/L	D	U
Xylenes, Total	UNFI	5.000	ug/L	D	UJ	UNFI	5.000	ug/L	D	UJ
cis-1,3-Dichloropropene	UNFI	5.000	ug/L	D	U	UNFI	5.000	ug/L	D	U
trans-1,2-Dichloroethene	UNFI	5.000	ug/L	D	NV		NA			
trans-1,3-Dichloropropene	UNFI	5.000	ug/L	D	UJ	UNFI	5.000	ug/L	D	U
trans-1,4-Dichloro-2-butene	UNFI	20.000	ug/L	D	U		NA			
Semivolatile Organics										
1,2,4,5-Tetrachlorobenzene	UNFI	10.000	ug/L	D	U		NA			
1,2,4-Trichlorobenzene	UNFI	10.000	ug/L	D	U	UNFI	10.000	ug/L	D	U
1,2-Dichlorobenzene	UNFI	10.000	ug/L	D	U	UNFI	10.000	ug/L	D	U
1,3,5-Trinitrobenzene	UNFI	10.000	ug/L	D	U		NA			
1,3-Dichlorobenzene	UNFI	10.000	ug/L	D	U	UNFI	10.000	ug/L	D	U
1,3-Dinitrobenzene	UNFI	10.000	ug/L	D	U		NA			
1,4-Dichlorobenzene	UNFI	10.000	ug/L	D	U	UNFI	10.000	ug/L	D	U
1,4-Naphthoquinone	UNFI	10.000	ug/L	D	U		NA			
1-Naphthylamine	UNFI	120.000	ug/L	D	UJ		NA			
2,3,4,6-Tetrachlorophenol	UNFI	10.000	ug/L	D	U		NA			
2,4,5-Trichlorophenol	UNFI	50.000	ug/L	D	U	UNFI	50.000	ug/L	D	U
2,4,6-Trichlorophenol	UNFI	10.000	ug/L	D	U		NA			
2,4,6-Trichlorophenol		NA				UNKN	10.000	ug/L	D	U
2,4-Dichlorophenol	UNFI	10.000	ug/L	D	U	UNFI	10.000	ug/L	D	U
2,4-Dimethylphenol	UNFI	10.000	ug/L	D	U	UNFI	10.000	ug/L	D	U
2,4-Dinitrophenol	UNFI	50.000	ug/L	D	U	UNFI	50.000	ug/L	D	UJ
2,4-Dinitrotoluene	UNFI	10.000	ug/L	D	U	UNFI	10.000	ug/L	D	UJ
2,6-Dichlorophenol	UNFI	10.000	ug/L	D	U		NA			
2,6-Dinitrotoluene	UNFI	10.000	ug/L	D	U	UNFI	10.000	ug/L	D	U
2-Acetylaminofluorene	UNFI	10.000	ug/L	D	U		NA			
2-Chloronaphthalene	UNFI	10.000	ug/L	D	U	UNFI	10.000	ug/L	D	U
2-Chlorophenol	UNFI	10.000	ug/L	D	U	UNFI	10.000	ug/L	D	U
2-Methylnaphthalene	UNFI	10.000	ug/L	D	U	UNFI	10.000	ug/L	D	U
2-Methylphenol	UNFI	10.000	ug/L	D	U	UNFI	10.000	ug/L	D	U
2-Naphthylamine	UNFI	170.000	ug/L	D	UJ		NA			
2-Nitroaniline	UNFI	50.000	ug/L	D	UJ	UNFI	50.000	ug/L	D	U
2-Nitrophenol	UNFI	10.000	ug/L	D	U	UNFI	10.000	ug/L	D	U
2-Picoline	UNFI	70.000	ug/L	D	U		NA			
3,3'-Dichlorobenzidine	UNFI	20.000	ug/L	D	U	UNFI	20.000	ug/L	D	UJ
3,3'-Dimethylbenzidine	UNFI	80.000	ug/L	D	U		NA			
3-Methylcholanthrene	UNFI	30.000	ug/L	D	U		NA			
3-Methylphenol	UNFI	10.000	ug/L	D	U		NA			
3-Nitroaniline	UNFI	50.000	ug/L	D	UJ	UNFI	50.000	ug/L	D	UJ

TABLE C-12A
(Continued)

PHASE I - CHEMICAL PARAMETERS

BORING NUMBER	3037					3037				
SAMPLE NUMBER	066571					066928				
SAMPLING DATE	08/25/89					08/27/90				
CHEMICAL PARAMETERS	FLTD	RESULTS	UNITS	L	VQ	FLTD	RESULTS	UNITS	L	VQ
Semivolatile Organics										
4,6-Dinitro-2-methylphenol	UNFI	50.000	ug/L	D	U	UNFI	50.000	ug/L	D	UJ
4-Aminobiphenyl	UNFI	50.000	ug/L	D	UJ		NA			
4-Bromophenyl phenyl ether	UNFI	10.000	ug/L	D	U	UNFI	10.000	ug/L	D	U
4-Chloro-3-methylphenol	UNFI	10.000	ug/L	D	U	UNFI	10.000	ug/L	D	U
4-Chlorophenylphenyl ether	UNFI	10.000	ug/L	D	U	UNFI	10.000	ug/L	D	U
4-Methylphenol	UNFI	10.000	ug/L	D	U	UNFI	10.000	ug/L	D	U
4-Nitroaniline	UNFI	50.000	ug/L	D	UJ	UNFI	50.000	ug/L	D	U
4-Nitrophenol	UNFI	50.000	ug/L	D	U	UNFI	50.000	ug/L	D	UJ
4-Nitroquinoline-1-oxide	UNFI	10.000	ug/L	D	UJ		NA			
5-Nitro-o-toluidine	UNFI	20.000	ug/L	D	U		NA			
7,12-Dimethylbenz(a)anthracene	UNFI	20.000	ug/L	D	U		NA			
Acenaphthene	UNFI	10.000	ug/L	D	U	UNFI	10.000	ug/L	D	U
Acenaphthylene	UNFI	10.000	ug/L	D	U	UNFI	10.000	ug/L	D	U
Acetophenone	UNFI	10.000	ug/L	D	U		NA			
Aniline	UNFI	10.000	ug/L	D	U		NA			
Anthracene	UNFI	10.000	ug/L	D	U	UNFI	10.000	ug/L	D	U
Aramite	UNFI	10.000	ug/L	D	U		NA			
Benzo(a)anthracene	UNFI	10.000	ug/L	D	U	UNFI	10.000	ug/L	D	U
Benzo(a)anthracene	UNKN	10.000	ug/L	D	R		NA			
Benzo(a)pyrene	UNFI	10.000	ug/L	D	U		NA			
Benzo(a)pyrene		NA				UNKN	10.000	ug/L	D	U
Benzo(b)fluoranthene	UNFI	10.000	ug/L	D	U	UNFI	10.000	ug/L	D	UJ
Benzo(g,h,i)perylene	UNFI	10.000	ug/L	D	U	UNFI	10.000	ug/L	D	U
Benzo(k)fluoranthene	UNFI	10.000	ug/L	D	U	UNFI	10.000	ug/L	D	U
Benzoic acid		NA				UNFI	50.000	ug/L	D	UJ
Benzyl alcohol	UNFI	10.000	ug/L	D	U	UNFI	10.000	ug/L	D	U
Butyl benzyl phthalate	UNFI	3.000	ug/L	D	J	UNFI	10.000	ug/L	D	UJ
Chrysene	UNFI	10.000	ug/L	D	U	UNFI	10.000	ug/L	D	U
Di-n-butyl phthalate	UNFI	10.000	ug/L	D	U	UNFI	10.000	ug/L	D	U
Di-n-octyl phthalate	UNFI	10.000	ug/L	D	U	UNFI	10.000	ug/L	D	U
Diallate	UNFI	10.000	ug/L	D	UJ		NA			
Dibenzo(a,h)anthracene	UNFI	10.000	ug/L	D	U	UNFI	10.000	ug/L	D	UJ
Dibenzofuran	UNFI	10.000	ug/L	D	U	UNFI	10.000	ug/L	D	U
Diethyl phthalate	UNFI	2.000	ug/L	D	J	UNFI	10.000	ug/L	D	U
Dimethyl phthalate	UNFI	10.000	ug/L	D	U	UNFI	10.000	ug/L	D	U
Diphenylamine	UNFI	10.000	ug/L	D	U		NA			
Ethyl methanesulfonate	UNFI	10.000	ug/L	D	U		NA			
Fluoranthene	UNFI	10.000	ug/L	D	U	UNFI	10.000	ug/L	D	U
Fluorene	UNFI	10.000	ug/L	D	U	UNFI	10.000	ug/L	D	U
Hexachlorobenzene	UNFI	10.000	ug/L	D	U	UNFI	10.000	ug/L	D	U
Hexachlorobutadiene	UNFI	10.000	ug/L	D	U	UNFI	10.000	ug/L	D	U
Hexachlorocyclopentadiene	UNFI	10.000	ug/L	D	U	UNFI	10.000	ug/L	D	UJ

TABLE C-12A
(Continued)

PHASE I - CHEMICAL PARAMETERS

BORING NUMBER		3037					3037				
SAMPLE NUMBER		066571					066928				
SAMPLING DATE		08/25/89					08/27/90				
CHEMICAL PARAMETERS	FLTD	RESULTS	UNITS	L	VQ	FLTD	RESULTS	UNITS	L	VQ
Semivolatile Organics										
Hexachloroethane	UNFI	10.000	ug/L	D	U	UNFI	10.000	ug/L	D	U
Hexachlorophene	UNFI	500.000	ug/L	D	R		NA			
Hexachloropropene	UNFI	20.000	ug/L	D	U		NA			
Indeno(1,2,3-cd)pyrene	UNFI	10.000	ug/L	D	U	UNFI	10.000	ug/L	D	U
Isophorone	UNFI	10.000	ug/L	D	U	UNFI	10.000	ug/L	D	U
Isosafrole	UNFI	10.000	ug/L	D	U		NA			
Methapyrilene	UNFI	40.000	ug/L	D	U		NA			
Methyl methanesulfonate	UNFI	10.000	ug/L	D	U		NA			
N-Nitroso-di-n-propylamine	UNFI	10.000	ug/L	D	U	UNFI	10.000	ug/L	D	UJ
N-Nitrosodi-n-butylamine	UNFI	20.000	ug/L	D	U		NA			
N-Nitrosodiethylamine	UNFI	10.000	ug/L	D	U		NA			
N-Nitrosodimethylamine	UNFI	10.000	ug/L	D	U		NA			
N-Nitrosodiphenylamine	UNFI	3.000	ug/L	D	U	UNFI	10.000	ug/L	D	U
N-Nitrosomethylethylamine	UNFI	10.000	ug/L	D	U		NA			
N-Nitrosomorpholine	UNFI	10.000	ug/L	D	U		NA			
N-Nitrosopiperidine	UNFI	10.000	ug/L	D	U		NA			
N-Nitrosopyrrolidine	UNFI	10.000	ug/L	D	U		NA			
Naphthalene	UNFI	10.000	ug/L	D	U	UNFI	10.000	ug/L	D	U
Nitrobenzene	UNFI	10.000	ug/L	D	U	UNFI	10.000	ug/L	D	U
O,O,O-Triethylphosphorothioate	UNFI	10.000	ug/L	D	U		NA			
Pentachlorobenzene	UNFI	20.000	ug/L	D	U		NA			
Pentachloroethane	UNFI	20.000	ug/L	D	U		NA			
Pentachloronitrobenzene	UNFI	20.000	ug/L	D	U		NA			
Pentachlorophenol	UNFI	50.000	ug/L	D	U	UNFI	50.000	ug/L	D	U
Phenacetin	UNFI	10.000	ug/L	D	U		NA			
Phenanthrene	UNFI	10.000	ug/L	D	U	UNFI	10.000	ug/L	D	U
Phenol	UNFI	17.000	ug/L	D	-	UNFI	10.000	ug/L	D	U
Pronamide	UNFI	30.000	ug/L	D	U		NA			
Pyrene	UNFI	10.000	ug/L	D	U	UNFI	10.000	ug/L	D	UJ
Safrole	UNFI	10.000	ug/L	D	U		NA			
a,a-Dimethylphenethylamine	UNFI	10.000	ug/L	D	U		NA			
bis(2-Chloroethoxy)methane	UNFI	10.000	ug/L	D	U	UNFI	10.000	ug/L	D	U
bis(2-Chloroethyl)ether	UNFI	10.000	ug/L	D	U	UNFI	10.000	ug/L	D	U
bis(2-Chloroisopropyl) ether	UNFI	10.000	ug/L	D	L	UNFI	10.000	ug/L	D	UJ
bis(2-Ethylhexyl) phthalate	UNFI	5.000	ug/L	D	U	UNFI	4.000	ug/L	D	J
o-Toluidine	UNFI	10.000	ug/L	D	UJ		NA			
p-Chloroaniline	UNFI	10.000	ug/L	D	UJ	UNFI	10.000	ug/L	D	U
p-Dimethylaminoazobenzene	UNFI	30.000	ug/L	D	U		NA			
p-Phenylenediamine	UNFI	50.000	ug/L	D	UJ		NA			
Herbicide Organics										
2,4,5-T	UNFI	5.000	ug/L	D	R		NA			

TABLE C-12A
(Continued)

PHASE I - CHEMICAL PARAMETERS

BORING NUMBER		3037					3037			
SAMPLE NUMBER		066571					066928			
SAMPLING DATE		08/25/89					08/27/90			
CHEMICAL PARAMETERS	FLTD	RESULTS	UNITS	L	VQ	FLTD	RESULTS	UNITS	L	VQ
Herbicide Organics										
2,4,5-TP (Silvex)	UNFI	0.025	ug/L	D	R		NA			
2,4-D	UNFI	0.050	ug/L	D	R		NA			
Dinoseb	UNFI	20.000	ug/L	D	U		NA			
Pesticide Organics/PCBs										
4,4'-DDD	UNFI	0.300	ug/L	D	U		NA			
4,4'-DDE	UNFI	0.300	ug/L	D	U		NA			
4,4'-DDT	UNFI	0.300	ug/L	D	U		NA			
Aldrin	UNFI	0.150	ug/L	D	U		NA			
Aroclor-1016	UNFI	1.500	ug/L	D	U		NA			
Aroclor-1016	UNKN	0.500	ug/L	D	R		NA			
Aroclor-1221	UNFI	1.500	ug/L	D	U		NA			
Aroclor-1232	UNFI	1.500	ug/L	D	U		NA			
Aroclor-1242	UNFI	1.500	ug/L	D	U		NA			
Aroclor-1248	UNFI	1.500	ug/L	D	U		NA			
Aroclor-1254	UNFI	1.000	ug/L	D	R		NA			
Aroclor-1254	UNKN	3.000	ug/L	D	U		NA			
Aroclor-1260	UNFI	3.000	ug/L	D	U		NA			
Dieldrin	UNFI	0.300	ug/L	D	U		NA			
Endosulfan II	UNFI	0.300	ug/L	D	U		NA			
Endosulfan sulfate	UNFI	0.300	ug/L	D	U		NA			
Endosulfan-I	UNFI	0.150	ug/L	D	U		NA			
Endrin	UNFI	0.300	ug/L	D	U		NA			
Endrin ketone	UNFI	0.300	ug/L	D	U		NA			
Heptachlor	UNFI	0.150	ug/L	D	U		NA			
Heptachlor epoxide	UNFI	0.150	ug/L	D	U		NA			
Isodrin	UNFI	0.150	ug/L	D	U		NA			
Kepone	UNFI	0.100	ug/L	D	R		NA			
Kepone	UNKN	0.300	ug/L	D	U		NA			
Methoxychlor	UNFI	1.500	ug/L	D	U		NA			
Toxaphene	UNFI	3.000	ug/L	D	U		NA			
alpha-BHC	UNFI	0.150	ug/L	D	U		NA			
alpha-Chlordane	UNFI	1.500	ug/L	D	U		NA			
beta-BHC	UNFI	0.150	ug/L	D	U		NA			
delta-BHC	UNFI	0.150	ug/L	D	U		NA			
gamma-BHC (Lindane)	UNFI	0.150	ug/L	D	U		NA			
gamma-Chlordane	UNFI	1.500	ug/L	D	U		NA			
Dioxin Furan										
1,2,3,4,7,8-Hexachlorodibenzofuran	UNFI	0.000	ug/L	E	U		NA			

TABLE C-12A
(Continued)

PHASE I - CHEMICAL PARAMETERS

BORING NUMBER		3037					3037			
SAMPLE NUMBER		066571					066928			
SAMPLING DATE		08/25/89					08/27/90			
CHEMICAL PARAMETERS	FLTD	RESULTS	UNITS	L	VQ	FLTD	RESULTS	UNITS	L	VQ
Dioxin Furan										
1,2,3,6,7,8-Hexachlorodibenzo-p-dioxin	UNFI	0.000	ug/L	E	U		NA			
1,2,3,7,8-Pentachlorodibenzofuran	UNFI	0.000	ug/L	E	U		NA			
2,3,7,8-TCDD	UNFI	0.001	ug/L	E	U		NA			
Hexachlorodibenzo-p-dioxin	UNFI	0.000	ug/L	E	U		NA			
Hexachlorodibenzofuran	UNFI	0.000	ug/L	E	U		NA			
Pentachlorodibenzo-p-dioxin	UNFI	0.001	ug/L	E	U		NA			
Pentachlorodibenzofuran	UNFI	0.000	ug/L	E	-		NA			
Tetrachlorodibenzo-p-dioxin	UNFI	0.004	ug/L	E	-		NA			
Tetrachlorodibenzofuran	UNFI	0.001	ug/L	E	-		NA			
General Chemistry										
Sulfide	UNFI	0.500	mg/L	C	UJ		NA			

000344

TABLE C-12A
(Continued)

PHASE II - RADIOLOGICAL PARAMETERS

BORING NUMBER		1035				1035				1038		
SAMPLE NUMBER		111552				111553				111548		
SAMPLING DATE		05/05/93				05/05/93				05/05/93		
RADIOLOGICAL PARAMETERS	FLTD	RESULTS	UNITS	VQ	FLTD	RESULTS	UNITS	VQ	FLTD	RESULTS	UNITS	VQ
CS-137		NA			FILT	16.100	pci/L	UJ		NA		
CS-137	UNFI	12.000	pci/L	UJ		NA			UNFI	10.400	pci/L	UJ
GROSS ALPHA	UNFI	7.170	pci/L	UJ		NA			UNFI	8.970	pci/L	UJ
GROSS BETA	UNFI	4.950	pci/L	UJ		NA			UNFI	6.270	pci/L	UJ
NP-237		NA			FILT	0.380	pci/L	R		NA		
NP-237	UNFI	0.300	pci/L	N		NA			UNFI	0.120	pci/L	R
PU-238		NA			FILT	0.160	pci/L	UJ		NA		
PU-238	UNFI	0.670	pci/L	J		NA			UNFI	0.090	pci/L	UJ
PU-239/240		NA			FILT	0.380	pci/L	-		NA		
PU-239/240	UNFI	0.110	pci/L	UJ		NA			UNFI	0.090	pci/L	UJ
RA-226		NA			FILT	0.130	pci/L	UJ		NA		
RA-226	UNFI	0.160	pci/L	UJ		NA			UNFI	0.180	pci/L	UJ
RA-228		NA			FILT	2.070	pci/L	U		NA		
RA-228	UNFI	1.390	pci/L	UJ		NA			UNFI	1.760	pci/L	UJ
RU-106		NA			FILT	121.000	pci/L	UJ		NA		
RU-106	UNFI	121.000	pci/L	UJ		NA			UNFI	137.000	pci/L	UJ
SR-90		NA			FILT	1.100	pci/L	U		NA		
SR-90	UNFI	0.840	pci/L	UJ		NA			UNFI	0.780	pci/L	UJ
TC-99		NA			FILT	9.600	pci/L	UJ		NA		
TC-99	UNFI	11.100	pci/L	UJ		NA			UNFI	10.900	pci/L	UJ
TH-228		NA			FILT	0.540	pci/L	UJ		NA		
TH-228	UNFI	0.200	pci/L	UJ		NA			UNFI	0.200	pci/L	UJ
TH-230		NA			FILT	0.710	pci/L	-		NA		
TH-230	UNFI	0.200	pci/L	UJ		NA			UNFI	0.260	pci/L	J
TH-232		NA			FILT	0.280	pci/L	UJ		NA		
TH-232	UNFI	0.190	pci/L	UJ		NA			UNFI	0.140	pci/L	UJ
TH-TOTAL		NA			FILT	2.580	ug/L	UJ		NA		
TH-TOTAL	UNFI	1.680	ug/L	UJ		NA			UNFI	1.250	ug/L	UJ
U-234		NA			FILT	1.110	pci/L	-		NA		
U-234	UNFI	1.100	pci/L	-		NA			UNFI	2.340	pci/L	-
U-235/236		NA			FILT	0.160	pci/L	UJ		NA		
U-235/236	UNFI	0.060	pci/L	UJ		NA			UNFI	0.120	pci/L	UJ
U-238		NA			FILT	0.840	pci/L	-		NA		
U-238	UNFI	0.670	pci/L	J		NA			UNFI	1.560	pci/L	-
U-TOTAL		NA			FILT	2.550	ug/L	-		NA		
U-TOTAL	UNFI	2.050	ug/L	-		NA			UNFI	4.110	ug/L	-

TABLE C-12A
(Continued)

PHASE II - RADIOLOGICAL PARAMETERS

BORING NUMBER		1038				1950				1950		
SAMPLE NUMBER		111549				115480 DUPLICATE				115481		
SAMPLING DATE		05/05/93				06/08/93				06/08/93		
RADIOLOGICAL PARAMETERS	FLTD	RESULTS	UNITS	VQ	FLTD	RESULTS	UNITS	VQ	FLTD	RESULTS	UNITS	VQ
CS-137	FILT	15.700	pci/L	UJ		NA				NA		
CS-137		NA			UNFI	10.600	pci/L	UJ	UNFI	15.200	pci/L	UJ
GROSS ALPHA		NA			UNFI	13.100	pci/L	UJ	UNFI	53.900	pci/L	UJ
GROSS BETA		NA			UNFI	7.540	pci/L	UJ	UNFI	64.000	pci/L	J
NP-237	FILT	0.480	pci/L	N		NA				NA		
NP-237		NA			UNFI	0.961	pci/L	U	UNFI	1.940	pci/L	N
PU-238	FILT	0.060	pci/L	UJ		NA				NA		
PU-238		NA			UNFI	0.125	pci/L	UJ	UNFI	0.144	pci/L	J
PU-239/240	FILT	0.160	pci/L	-		NA				NA		
PU-239/240		NA			UNFI	0.237	pci/L	U	UNFI	0.422	pci/L	U
RA-226	FILT	0.150	pci/L	J		NA				NA		
RA-226		NA			UNFI	0.168	pci/L	UJ	UNFI	0.821	pci/L	J
RA-228	FILT	1.160	pci/L	UJ		NA				NA		
RA-228		NA			UNFI	1.940	pci/L	UJ	UNFI	1.350	pci/L	UJ
RU-106	FILT	114.000	pci/L	UJ		NA				NA		
RU-106		NA			UNFI	128.000	pci/L	UJ	UNFI	144.000	pci/L	UJ
SR-90	FILT	1.080	pci/L	U		NA				NA		
SR-90		NA			UNFI	0.744	pci/L	UJ	UNFI	0.774	pci/L	UJ
TC-99	FILT	11.000	pci/L	UJ		NA				NA		
TC-99		NA			UNFI	11.420	pci/L	UJ	UNFI	10.880	pci/L	UJ
TH-228	FILT	0.250	pci/L	U		NA				NA		
TH-228		NA			UNFI	0.221	pci/L	UJ	UNFI	0.566	pci/L	J
TH-230	FILT	0.290	pci/L	-		NA				NA		
TH-230		NA			UNFI	0.221	pci/L	UJ	UNFI	1.030	pci/L	-
TH-232	FILT	0.200	pci/L	UJ		NA				NA		
TH-232		NA			UNFI	0.145	pci/L	UJ	UNFI	0.654	pci/L	J
TH-TOTAL	FILT	1.840	ug/L	UJ		NA				NA		
TH-TOTAL		NA			UNFI	1.330	ug/L	UJ	UNFI	5.960	ug/L	-
U-234	FILT	2.300	pci/L	-		NA				NA		
U-234		NA			UNFI	3.500	pci/L	-	UNFI	5.060	pci/L	-
U-235/236	FILT	0.050	pci/L	J		NA				NA		
U-235/236		NA			UNFI	0.208	pci/L	-	UNFI	0.132	pci/L	UJ
U-238	FILT	1.670	pci/L	-		NA				NA		
U-238		NA			UNFI	2.820	pci/L	-	UNFI	4.830	pci/L	-
U-TOTAL	FILT	4.950	ug/L	-		NA				NA		
U-TOTAL		NA			UNFI	7.670	ug/L	-	UNFI	11.000	ug/L	-

000346

TABLE C-12A
(Continued)

PHASE II - RADIOLOGICAL PARAMETERS

BORING NUMBER	1952				1952				2027			
SAMPLE NUMBER	115468				115471				111543			
SAMPLING DATE	05/15/93				05/15/93				04/23/93			
RADIOLOGICAL PARAMETERS	FLTD	RESULTS	UNITS	VQ	FLTD	RESULTS	UNITS	VQ	FLTD	RESULTS	UNITS	VQ
CS-137	UNFI	13.000	pci/L	UJ	UNFI	18.000	pci/L	UJ	UNFI	14.400	pci/L	UJ
GROSS ALPHA	UNFI	25.600	pci/L	J	UNFI	92.100	pci/L	UJ	UNFI	18.500	pci/L	UJ
GROSS BETA	UNFI	13.300	pci/L	J	UNFI	178.000	pci/L	J	UNFI	12.600	pci/L	J
NP-237	UNFI	0.179	pci/L	R	UNFI	0.249	pci/L	U	UNFI	0.121	pci/L	R
PU-238	UNFI	0.069	pci/L	UJ	UNFI	0.169	pci/L	J	UNFI	0.166	pci/L	UJ
PU-239/240	UNFI	0.069	pci/L	UJ	UNFI	0.153	pci/L	UJ	UNFI	0.183	pci/L	UJ
RA-226	UNFI	0.193	pci/L	J	UNFI	5.110	pci/L	-	UNFI	0.649	pci/L	J
RA-228	UNFI	1.340	pci/L	U	UNFI	3.720	pci/L	J	UNFI	1.470	pci/L	UJ
RU-106	UNFI	123.000	pci/L	UJ	UNFI	126.000	pci/L	UJ	UNFI	132.000	pci/L	UJ
SR-90	UNFI	0.900	pci/L	J	UNFI	1.350	pci/L	J	UNFI	1.540	pci/L	U
TC-99	UNFI	8.300	pci/L	UJ	UNFI	8.100	pci/L	UJ	UNFI	9.700	pci/L	UJ
TH-228	UNFI	0.323	pci/L	UJ	UNFI	14.000	pci/L	-	UNFI	0.269	pci/L	UJ
TH-230	UNFI	0.335	pci/L	J	UNFI	13.800	pci/L	-	UNFI	0.313	pci/L	J
TH-232	UNFI	0.094	pci/L	UJ	UNFI	11.500	pci/L	-	UNFI	0.184	pci/L	UJ
TH-TOTAL	UNFI	0.865	ug/L	UJ	UNFI	104.000	ug/L	-	UNFI	1.690	ug/L	UJ
U-234	UNFI	4.870	pci/L	-	UNFI	12.000	pci/L	-	UNFI	4.740	pci/L	-
U-235/236	UNFI	0.412	pci/L	J	UNFI	0.432	pci/L	J	UNFI	0.277	pci/L	J
U-238	UNFI	6.770	pci/L	-	UNFI	15.200	pci/L	-	UNFI	3.690	pci/L	-
U-TOTAL	UNFI	15.800	ug/L	-	UNFI	55.800	ug/L	-	UNFI	9.150	ug/L	-

TABLE C-12A
(Continued)

PHASE II - RADIOLOGICAL PARAMETERS

BORING NUMBER	2037				2052				2947			
SAMPLE NUMBER	111540				111546				111572 DUPLICATE			
SAMPLING DATE	04/22/93				04/29/93				05/19/93			
RADIOLOGICAL PARAMETERS	FLTD	RESULTS	UNITS	VQ	FLTD	RESULTS	UNITS	VQ	FLTD	RESULTS	UNITS	VQ
CS-137	UNFI	12.600	pci/L	UJ	UNFI	11.300	pci/L	UJ	UNFI	13.000	pci/L	UJ
GROSS ALPHA	UNFI	8.940	pci/L	UJ	UNFI	8.700	pci/L	UJ	UNFI	10.480	pci/L	UJ
GROSS BETA	UNFI	6.370	pci/L	UJ	UNFI	6.100	pci/L	UJ	UNFI	7.520	pci/L	UJ
NP-237	UNFI	0.050	pci/L	R	UNFI	0.292	pci/L	U	UNFI	0.093	pci/L	R
PU-238	UNFI	0.100	pci/L	UJ	UNFI	0.155	pci/L	J	UNFI	0.066	pci/L	J
PU-239/240	UNFI	0.055	pci/L	U	UNFI	0.133	pci/L	UJ	UNFI	0.093	pci/L	UJ
RA-226	UNFI	0.430	pci/L	J	UNFI	0.222	pci/L	J	UNFI	1.210	pci/L	J
RA-228	UNFI	2.120	pci/L	UJ	UNFI	1.460	pci/L	UJ	UNFI	3.280	pci/L	Z
RU-106	UNFI	117.000	pci/L	UJ	UNFI	96.000	pci/L	UJ	UNFI	125.000	pci/L	UJ
SR-90	UNFI	2.100	pci/L	J	UNFI	0.951	pci/L	UJ	UNFI	1.210	pci/L	J
TC-99	UNFI	8.100	pci/L	UJ	UNFI	8.800	pci/L	UJ	UNFI	11.000	pci/L	UJ
TH-228	UNFI	0.310	pci/L	UJ	UNFI	0.152	pci/L	UJ	UNFI	0.230	pci/L	UJ
TH-230	UNFI	0.270	pci/L	UJ	UNFI	0.712	pci/L	J	UNFI	0.270	pci/L	U
TH-232	UNFI	0.180	pci/L	UJ	UNFI	0.121	pci/L	UJ	UNFI	0.250	pci/L	UJ
TH-TOTAL	UNFI	1.640	ug/L	UJ	UNFI	1.120	ug/L	UJ	UNFI	1.540	ug/L	UJ
U-234	UNFI	2.050	pci/L	J	UNFI	1.740	pci/L	-	UNFI	0.270	pci/L	J
U-235/236	UNFI	0.120	pci/L	J	UNFI	0.153	pci/L	UJ	UNFI	0.140	pci/L	UJ
U-238	UNFI	1.920	pci/L	J	UNFI	1.360	pci/L	-	UNFI	0.180	pci/L	J
U-TOTAL	UNFI	4.500	ug/L	-	UNFI	3.450	ug/L	-	UNFI	1.000	ug/L	U

000348

TABLE C-12A
(Continued)

PHASE II - RADIOLOGICAL PARAMETERS

BORING NUMBER		2947				2947				2947		
SAMPLE NUMBER		111574				115473				115475		
		DUPLICATE										
SAMPLING DATE		05/19/93				05/19/93				05/19/93		
RADIOLOGICAL PARAMETERS	FLTD	RESULTS	UNITS	VQ	FLTD	RESULTS	UNITS	VQ	FLTD	RESULTS	UNITS	VQ
CS-137		NA			FILT	16.000	pci/L	UJ		NA		
CS-137	UNFI	10.600	pci/L	UJ		NA			UNFI	12.900	pci/L	UJ
GROSS ALPHA		NA			FILT	11.710	pci/L	UJ		NA		
GROSS ALPHA	UNFI	12.830	pci/L	UJ		NA			UNFI	10.530	pci/L	UJ
GROSS BETA		NA			FILT	7.110	pci/L	UJ		NA		
GROSS BETA	UNFI	7.390	pci/L	UJ		NA			UNFI	6.470	pci/L	UJ
NP-237		NA			FILT	0.180	pci/L	R		NA		
NP-237	UNFI	0.110	pci/L	R		NA			UNFI	0.098	pci/L	R
PU-238		NA			FILT	0.890	pci/L	J		NA		
PU-238	UNFI	0.110	pci/L	UJ		NA			UNFI	0.052	pci/L	J
PU-239/240		NA			FILT	0.169	pci/L	U		NA		
PU-239/240	UNFI	0.098	pci/L	U		NA			UNFI	0.098	pci/L	UJ
RA-226		NA			FILT	1.280	pci/L	J		NA		
RA-226	UNFI	0.990	pci/L	J		NA			UNFI	1.340	pci/L	J
RA-228		NA			FILT	2.210	pci/L	UJ		NA		
RA-228	UNFI	2.000	pci/L	UJ		NA			UNFI	2.200	pci/L	UJ
RU-106		NA			FILT	133.000	pci/L	UJ		NA		
RU-106	UNFI	99.900	pci/L	UJ		NA			UNFI	127.000	pci/L	UJ
SR-90		NA			FILT	0.870	pci/L	J		NA		
SR-90	UNFI	1.370	pci/L	J		NA			UNFI	1.370	pci/L	J
TC-99		NA			FILT	10.500	pci/L	UJ		NA		
TC-99	UNFI	10.100	pci/L	UJ		NA			UNFI	10.500	pci/L	UJ
TH-228		NA			FILT	0.210	pci/L	UJ		NA		
TH-228	UNFI	0.280	pci/L	UJ		NA			UNFI	0.160	pci/L	UJ
TH-230		NA			FILT	0.220	pci/L	UJ		NA		
TH-230	UNFI	0.230	pci/L	U		NA			UNFI	0.330	pci/L	U
TH-232		NA			FILT	0.057	pci/L	UJ		NA		
TH-232	UNFI	0.130	pci/L	UJ		NA			UNFI	0.050	pci/L	UJ
TH-TOTAL		NA			FILT	0.523	ug/L	UJ		NA		
TH-TOTAL	UNFI	1.190	ug/L	UJ		NA			UNFI	0.460	ug/L	UJ
U-234		NA			FILT	0.270	pci/L	J		NA		
U-234	UNFI	0.230	pci/L	J		NA			UNFI	0.170	pci/L	J
U-235/236		NA			FILT	0.097	pci/L	UJ		NA		
U-235/236	UNFI	0.051	pci/L	J		NA			UNFI	0.050	pci/L	J
U-238		NA			FILT	0.240	pci/L	J		NA		
U-238	UNFI	0.170	pci/L	J		NA			UNFI	0.160	pci/L	J
U-TOTAL		NA			FILT	1.000	ug/L	UJ		NA		
U-TOTAL	UNFI	1.000	ug/L	U		NA			UNFI	1.000	ug/L	UJ

TABLE C-12A
(Continued)

PHASE II - RADIOLOGICAL PARAMETERS

BORING NUMBER	2949				2949				2951			
SAMPLE NUMBER	111489				115479				111536			
SAMPLING DATE	04/17/93				05/26/93				05/01/93			
RADIOLOGICAL PARAMETERS	FLTD	RESULTS	UNITS	VQ	FLTD	RESULTS	UNITS	VQ	FLTD	RESULTS	UNITS	VQ
CS-137		NA			UNFI	15.000	pci/L	UJ	UNFI	18.500	pci/L	UJ
CS-137	UNKN	18.000	pci/L	UJ		NA				NA		
GROSS ALPHA		NA			UNFI	8.150	pci/L	UJ	UNFI	7.070	pci/L	UJ
GROSS ALPHA	UNKN	6.680	pci/L	UJ		NA				NA		
GROSS BETA		NA			UNFI	6.150	pci/L	UJ	UNFI	4.730	pci/L	UJ
GROSS BETA	UNKN	4.280	pci/L	UJ		NA				NA		
NP-237		NA			UNFI	0.958	pci/L	U	UNFI	0.200	pci/L	U
NP-237	UNKN	0.141	pci/L	R		NA				NA		
PU-238		NA			UNFI	0.278	pci/L	J	UNFI	0.130	pci/L	UJ
PU-238	UNKN	0.204	pci/L	UJ		NA				NA		
PU-239/240		NA			UNFI	0.410	pci/L	U	UNFI	0.130	pci/L	UJ
PU-239/240	UNKN	0.176	pci/L	UJ		NA				NA		
RA-226		NA			UNFI	0.313	pci/L	J	UNFI	0.270	pci/L	J
RA-226	UNKN	0.566	pci/L	J		NA				NA		
RA-228		NA			UNFI	2.610	pci/L	UJ	UNFI	1.350	pci/L	UJ
RA-228	UNKN	1.530	pci/L	UJ		NA				NA		
RU-106		NA			UNFI	140.000	pci/L	UJ	UNFI	151.000	pci/L	UJ
RU-106	UNKN	155.000	pci/L	UJ		NA				NA		
SR-90		NA			UNFI	0.754	pci/L	J	UNFI	2.380	pci/L	J
SR-90	UNKN	0.692	pci/L	J		NA				NA		
TC-99		NA			UNFI	12.300	pci/L	UJ	UNFI	8.700	pci/L	UJ
TC-99	UNKN	11.000	pci/L	UJ		NA				NA		
TH-228		NA			UNFI	0.190	pci/L	UJ	UNFI	0.025	pci/L	J
TH-228	UNKN	0.247	pci/L	UJ		NA				NA		
TH-230		NA			UNFI	0.403	pci/L	J	UNFI	1.720	pci/L	U
TH-230	UNKN	0.412	pci/L	U		NA				NA		
TH-232		NA			UNFI	0.067	pci/L	UJ	UNFI	0.057	pci/L	UJ
TH-232	UNKN	0.179	pci/L	UJ		NA				NA		
TH-TOTAL		NA			UNFI	0.616	ug/L	UJ	UNFI	0.520	ug/L	UJ
TH-TOTAL	UNKN	1.640	ug/L	UJ		NA				NA		
U-234		NA			UNFI	0.269	pci/L	J	UNFI	0.860	pci/L	UJ
U-234	UNKN	0.192	pci/L	J		NA				NA		
U-235/236		NA			UNFI	0.046	pci/L	UJ	UNFI	0.510	pci/L	UJ
U-235/236	UNKN	0.064	pci/L	UJ		NA				NA		
U-238		NA			UNFI	0.168	pci/L	J	UNFI	1.040	pci/L	UJ
U-238	UNKN	0.143	pci/L	J		NA				NA		
U-TOTAL		NA			UNFI	0.378	ug/L	J	UNFI	1.080	ug/L	-
U-TOTAL	UNKN	5.000	ug/L	U		NA				NA		

TABLE C-12A
(Continued)

PHASE II - RADIOLOGICAL PARAMETERS

BORING NUMBER		2951				2953		
SAMPLE NUMBER		115478				115488		
SAMPLING DATE		05/25/93				06/23/93		
RADIOLOGICAL PARAMETERS	FLTD	RESULTS	UNITS	VQ	FLTD	RESULTS	UNITS	VQ
CS-137		NA			FILT	16.000	pci/L	UJ
CS-137	UNFI	17.800	pci/L	UJ	UNFI	20.000	pci/L	UJ
GROSS ALPHA		NA			FILT	5.970	pci/L	UJ
GROSS ALPHA	UNFI	11.800	pci/L	UJ	UNFI	5.570	pci/L	UJ
GROSS BETA		NA			FILT	5.320	pci/L	J
GROSS BETA	UNFI	7.580	pci/L	UJ	UNFI	5.390	pci/L	UJ
NP-237		NA			FILT	0.116	pci/L	U
NP-237	UNFI	0.318	pci/L	N	UNFI	0.048	pci/L	U
PU-238		NA			FILT	0.096	pci/L	UJ
PU-238	UNFI	0.168	pci/L	UJ	UNFI	0.048	pci/L	U
PU-239/240		NA			FILT	0.070	pci/L	U
PU-239/240	UNFI	0.066	pci/L	UJ	UNFI	0.096	pci/L	U
RA-226		NA			FILT	0.576	pci/L	J
RA-226	UNFI	0.940	pci/L	J	UNFI	0.864	pci/L	J
RA-228		NA			FILT	1.140	pci/L	UJ
RA-228	UNFI	1.750	pci/L	UJ	UNFI	4.310	pci/L	J
RU-106		NA			FILT	116.000	pci/L	UJ
RU-106	UNFI	131.000	pci/L	UJ	UNFI	116.000	pci/L	UJ
SR-90		NA			FILT	0.794	pci/L	UJ
SR-90	UNFI	1.740	pci/L	J	UNFI	1.010	pci/L	J
TC-99		NA			FILT	9.800	pci/L	UJ
TC-99	UNFI	10.950	pci/L	UJ	UNFI	10.900	pci/L	UJ
TH-228		NA			FILT	0.216	pci/L	UJ
TH-228	UNFI	0.617	pci/L	UJ	UNFI	0.216	pci/L	UJ
TH-230		NA			FILT	0.301	pci/L	U
TH-230	UNFI	0.291	pci/L	UJ	UNFI	0.327	pci/L	U
TH-232		NA			FILT	0.116	pci/L	UJ
TH-232	UNFI	0.290	pci/L	UJ	UNFI	0.202	pci/L	UJ
TH-TOTAL		NA			FILT	1.070	ug/L	UJ
TH-TOTAL	UNFI	2.670	ug/L	UJ	UNFI	1.820	ug/L	UJ
U-234		NA			FILT	0.474	pci/L	J
U-234	UNFI	0.268	pci/L	J	UNFI	0.430	pci/L	J
U-235/236		NA			FILT	0.094	pci/L	UJ
U-235/236	UNFI	0.054	pci/L	UJ	UNFI	0.097	pci/L	UJ
U-238		NA			FILT	0.286	pci/L	J
U-238	UNFI	0.392	pci/L	J	UNFI	0.301	pci/L	J
U-TOTAL		NA			FILT	1.000	ug/L	U
U-TOTAL	UNFI	0.781	ug/L	J	UNFI	1.230	ug/L	-

TABLE C-12A
(Continued)

PHASE II - CHEMICAL PARAMETERS

BORING NUMBER	1035					1035					1038				
SAMPLE NUMBER	111552					111553					111548				
SAMPLING DATE	05/05/93					05/05/93					05/05/93				
CHEMICAL PARAMETERS	FLTD	RESULTS	UNITS	L	VQ	FLTD	RESULTS	UNITS	L	VQ	FLTD	RESULTS	UNITS	L	VQ
Inorganics															
Aluminum		NA				FILT	0.376	mg/L	C	U		NA			
Aluminum	UNFI	0.224	mg/L	C	-	NA					UNFI	0.267	mg/L	C	-
Antimony		NA				FILT	0.003	mg/L	C	UJ		NA			
Antimony	UNFI	0.003	mg/L	C	UJ	NA					UNFI	0.003	mg/L	C	UJ
Arsenic		NA				FILT	0.001	mg/L	C	U		NA			
Arsenic	UNFI	0.001	mg/L	C	U	NA					UNFI	0.002	mg/L	C	-
Barium		NA				FILT	0.091	mg/L	C	-		NA			
Barium	UNFI	0.091	mg/L	C	-	NA					UNFI	0.043	mg/L	C	-
Beryllium		NA				FILT	0.001	mg/L	C	U		NA			
Beryllium	UNFI	0.001	mg/L	C	U	NA					UNFI	0.001	mg/L	C	U
Cadmium		NA				FILT	0.002	mg/L	C	U		NA			
Cadmium	UNFI	0.002	mg/L	C	U	NA					UNFI	0.002	mg/L	C	U
Calcium		NA				FILT	90.500	mg/L	C	-		NA			
Calcium	UNFI	91.600	mg/L	C	-	NA					UNFI	145.000	mg/L	C	-
Chromium		NA				FILT	0.004	mg/L	C	U		NA			
Chromium	UNFI	0.004	mg/L	C	U	NA					UNFI	0.004	mg/L	C	U
Cobalt		NA				FILT	0.004	mg/L	C	-		NA			
Cobalt	UNFI	0.003	mg/L	C	U	NA					UNFI	0.003	mg/L	C	U
Copper		NA				FILT	0.007	mg/L	C	U		NA			
Copper	UNFI	0.002	mg/L	C	U	NA					UNFI	0.003	mg/L	C	U
Cyanide		NA				FILT	0.001	mg/L	C	R		NA			
Cyanide	UNFI	0.001	mg/L	C	U	NA					UNFI	0.001	mg/L	C	U
Iron		NA				FILT	0.618	mg/L	C	U		NA			
Iron	UNFI	0.524	mg/L	C	-	NA					UNFI	1.120	mg/L	C	-
Lead		NA				FILT	0.001	mg/L	C	U		NA			
Lead	UNFI	0.001	mg/L	C	-	NA					UNFI	0.001	mg/L	C	U
Magnesium		NA				FILT	33.300	mg/L	C	-		NA			
Magnesium	UNFI	33.600	mg/L	C	-	NA					UNFI	62.800	mg/L	C	-
Manganese		NA				FILT	0.023	mg/L	C	-		NA			
Manganese	UNFI	0.045	mg/L	C	-	NA					UNFI	0.144	mg/L	C	-
Mercury		NA				FILT	0.000	mg/L	C	U		NA			
Mercury	UNFI	0.000	mg/L	C	U	NA					UNFI	0.000	mg/L	C	U
Molybdenum		NA				FILT	0.008	mg/L	C	U		NA			
Molybdenum	UNFI	0.007	mg/L	C	U	NA					UNFI	0.005	mg/L	C	U
Nickel		NA				FILT	0.003	mg/L	C	U		NA			
Nickel	UNFI	0.004	mg/L	C	-	NA					UNFI	0.003	mg/L	C	U
Potassium		NA				FILT	1.370	mg/L	C	-		NA			
Potassium	UNFI	1.330	mg/L	C	-	NA					UNFI	2.090	mg/L	C	-
Selenium		NA				FILT	0.001	mg/L	C	UJ		NA			
Selenium	UNFI	0.001	mg/L	C	UJ	NA					UNFI	0.001	mg/L	C	UJ
Silicon		NA				FILT	6.600	mg/L	C	-		NA			
Silicon	UNFI	6.360	mg/L	C	-	NA					UNFI	9.200	mg/L	C	-

000352

TABLE C-12A
(Continued)

PHASE II - CHEMICAL PARAMETERS

BORING NUMBER	1035					1035					1038				
SAMPLE NUMBER	111552					111553					111548				
SAMPLING DATE	05/05/93					05/05/93					05/05/93				
CHEMICAL PARAMETERS	FLTD	RESULTS	UNITS	L	VQ	FLTD	RESULTS	UNITS	L	VQ	FLTD	RESULTS	UNITS	L	VQ
Inorganics															
Silver		NA				FILT	0.002	mg/L	C	U		NA			
Silver	UNFI	0.002	mg/L	C	U		NA				UNFI	0.002	mg/L	C	U
Sodium		NA				FILT	13.500	mg/L	C	-		NA			
Sodium	UNFI	13.100	mg/L	C	-		NA				UNFI	8.420	mg/L	C	-
Thallium		NA				FILT	0.001	mg/L	C	U		NA			
Thallium	UNFI	0.001	mg/L	C	U		NA				UNFI	0.001	mg/L	C	U
Vanadium		NA				FILT	0.008	mg/L	C	U		NA			
Vanadium	UNFI	0.008	mg/L	C	U		NA				UNFI	0.009	mg/L	C	U
Zinc		NA				FILT	0.010	mg/L	C	U		NA			
Zinc	UNFI	0.004	mg/L	C	U		NA				UNFI	0.004	mg/L	C	U
Volatile Organics															
1,1,1-Trichloroethane	UNFI	10.000	ug/L	C	U		NA				UNFI	10.000	ug/L	C	U
1,1,2,2-Tetrachloroethane	UNFI	10.000	ug/L	C	U		NA				UNFI	10.000	ug/L	C	U
1,1,2-Trichloroethane	UNFI	10.000	ug/L	C	U		NA				UNFI	10.000	ug/L	C	U
1,1-Dichloroethane	UNFI	10.000	ug/L	C	UJ		NA				UNFI	10.000	ug/L	C	UJ
1,1-Dichloroethene	UNFI	10.000	ug/L	C	U		NA				UNFI	10.000	ug/L	C	U
1,2-Dichloroethane	UNFI	10.000	ug/L	C	U		NA				UNFI	10.000	ug/L	C	U
1,2-Dichloroethene	UNFI	10.000	ug/L	C	U		NA				UNFI	10.000	ug/L	C	U
1,2-Dichloropropane	UNFI	10.000	ug/L	C	U		NA				UNFI	10.000	ug/L	C	U
2-Butanone	UNFI	10.000	ug/L	C	UJ		NA				UNFI	10.000	ug/L	C	UJ
2-Hexanone	UNFI	10.000	ug/L	C	U		NA				UNFI	10.000	ug/L	C	U
4-Methyl-2-pentanone	UNFI	10.000	ug/L	C	U		NA				UNFI	10.000	ug/L	C	U
Acetone	UNFI	2.000	ug/L	C	R		NA				UNFI	2.000	ug/L	C	R
Benzene	UNFI	10.000	ug/L	C	U		NA				UNFI	10.000	ug/L	C	U
Bromodichloromethane	UNFI	10.000	ug/L	C	U		NA				UNFI	10.000	ug/L	C	U
Bromoform	UNFI	10.000	ug/L	C	U		NA				UNFI	10.000	ug/L	C	U
Bromomethane	UNFI	10.000	ug/L	C	U		NA				UNFI	10.000	ug/L	C	U
Carbon Tetrachloride	UNFI	10.000	ug/L	C	U		NA				UNFI	10.000	ug/L	C	U
Carbon disulfide	UNFI	10.000	ug/L	C	UJ		NA				UNFI	10.000	ug/L	C	UJ
Chlorobenzene	UNFI	10.000	ug/L	C	U		NA				UNFI	10.000	ug/L	C	U
Chloroethane	UNFI	10.000	ug/L	C	UJ		NA				UNFI	10.000	ug/L	C	UJ
Chloroform	UNFI	10.000	ug/L	C	U		NA				UNFI	10.000	ug/L	C	U
Chloromethane	UNFI	10.000	ug/L	C	R		NA				UNFI	10.000	ug/L	C	R
Dibromochloromethane	UNFI	10.000	ug/L	C	U		NA				UNFI	10.000	ug/L	C	U
Ethylbenzene	UNFI	10.000	ug/L	C	U		NA				UNFI	10.000	ug/L	C	U
Methylene chloride	UNFI	10.000	ug/L	C	UJ		NA				UNFI	10.000	ug/L	C	UJ
Styrene	UNFI	10.000	ug/L	C	U		NA				UNFI	10.000	ug/L	C	U
Tetrachloroethene	UNFI	10.000	ug/L	C	U		NA				UNFI	10.000	ug/L	C	U
Toluene	UNFI	10.000	ug/L	C	U		NA				UNFI	10.000	ug/L	C	U
Trichloroethene	UNFI	10.000	ug/L	C	U		NA				UNFI	10.000	ug/L	C	U

000353

6508

TABLE C-12A
(Continued)

PHASE II - CHEMICAL PARAMETERS

BORING NUMBER	1035					1035					1038				
SAMPLE NUMBER	111552					111553					111548				
SAMPLING DATE	05/05/93					05/05/93					05/05/93				
CHEMICAL PARAMETERS	FLTD	RESULTS	UNITS	L	VQ	FLTD	RESULTS	UNITS	L	VQ	FLTD	RESULTS	UNITS	L	VQ
Volatile Organics															
Vinyl Acetate	UNFI	10.000	ug/L	C	UJ		NA				UNFI	10.000	ug/L	C	UJ
Vinyl chloride	UNFI	10.000	ug/L	C	UJ		NA				UNFI	10.000	ug/L	C	UJ
Xylenes, Total	UNFI	10.000	ug/L	C	U		NA				UNFI	10.000	ug/L	C	U
cis-1,3-Dichloropropene	UNFI	10.000	ug/L	C	U		NA				UNFI	10.000	ug/L	C	U
trans-1,3-Dichloropropene	UNFI	10.000	ug/L	C	U		NA				UNFI	10.000	ug/L	C	U
Semivolatile Organics															
1,2,4-Trichlorobenzene	UNFI	10.000	ug/L	C	U		NA				UNFI	10.000	ug/L	C	U
1,2-Dichlorobenzene	UNFI	10.000	ug/L	C	U		NA				UNFI	10.000	ug/L	C	U
1,3-Dichlorobenzene	UNFI	10.000	ug/L	C	U		NA				UNFI	10.000	ug/L	C	U
1,4-Dichlorobenzene	UNFI	10.000	ug/L	C	U		NA				UNFI	10.000	ug/L	C	U
2,4,5-Trichlorophenol	UNFI	25.000	ug/L	C	U		NA				UNFI	25.000	ug/L	C	U
2,4,6-Trichlorophenol	UNFI	10.000	ug/L	C	U		NA				UNFI	10.000	ug/L	C	U
2,4-Dichlorophenol	UNFI	10.000	ug/L	C	U		NA				UNFI	10.000	ug/L	C	U
2,4-Dimethylphenol	UNFI	10.000	ug/L	C	U		NA				UNFI	10.000	ug/L	C	U
2,4-Dinitrophenol	UNFI	25.000	ug/L	C	R		NA				UNFI	25.000	ug/L	C	R
2,4-Dinitrotoluene	UNFI	10.000	ug/L	C	U		NA				UNFI	10.000	ug/L	C	U
2,6-Dinitrotoluene	UNFI	10.000	ug/L	C	U		NA				UNFI	10.000	ug/L	C	U
2-Chloronaphthalene	UNFI	10.000	ug/L	C	U		NA				UNFI	10.000	ug/L	C	U
2-Chlorophenol	UNFI	10.000	ug/L	C	U		NA				UNFI	10.000	ug/L	C	U
2-Methylnaphthalene	UNFI	10.000	ug/L	C	U		NA				UNFI	10.000	ug/L	C	U
2-Methylphenol	UNFI	10.000	ug/L	C	U		NA				UNFI	10.000	ug/L	C	U
2-Nitroaniline	UNFI	25.000	ug/L	C	U		NA				UNFI	25.000	ug/L	C	U
2-Nitrophenol	UNFI	10.000	ug/L	C	U		NA				UNFI	10.000	ug/L	C	U
3,3'-Dichlorobenzidine	UNFI	10.000	ug/L	C	U		NA				UNFI	10.000	ug/L	C	U
3-Nitroaniline	UNFI	25.000	ug/L	C	U		NA				UNFI	25.000	ug/L	C	U
4,6-Dinitro-2-methylphenol	UNFI	25.000	ug/L	C	UJ		NA				UNFI	25.000	ug/L	C	UJ
4-Bromophenyl phenyl ether	UNFI	10.000	ug/L	C	U		NA				UNFI	10.000	ug/L	C	U
4-Chloro-3-methylphenol	UNFI	10.000	ug/L	C	U		NA				UNFI	10.000	ug/L	C	U
4-Chlorophenylphenyl ether	UNFI	10.000	ug/L	C	U		NA				UNFI	10.000	ug/L	C	U
4-Methylphenol	UNFI	10.000	ug/L	C	U		NA				UNFI	10.000	ug/L	C	U
4-Nitroaniline	UNFI	25.000	ug/L	C	U		NA				UNFI	25.000	ug/L	C	U
4-Nitrophenol	UNFI	25.000	ug/L	C	UJ		NA				UNFI	25.000	ug/L	C	UJ
Acenaphthene	UNFI	10.000	ug/L	C	U		NA				UNFI	10.000	ug/L	C	U
Acenaphthylene	UNFI	10.000	ug/L	C	U		NA				UNFI	10.000	ug/L	C	U
Anthracene	UNFI	10.000	ug/L	C	U		NA				UNFI	10.000	ug/L	C	U
Benzo(a)anthracene	UNFI	10.000	ug/L	C	U		NA				UNFI	10.000	ug/L	C	U
Benzo(a)pyrene	UNFI	10.000	ug/L	C	U		NA				UNFI	10.000	ug/L	C	UJ
Benzo(b)fluoranthene	UNFI	10.000	ug/L	C	U		NA				UNFI	10.000	ug/L	C	UJ
Benzo(g,h,i)perylene	UNFI	10.000	ug/L	C	U		NA				UNFI	10.000	ug/L	C	UJ
Benzo(k)fluoranthene	UNFI	10.000	ug/L	C	U		NA				UNFI	10.000	ug/L	C	UJ

000354

TABLE C-12A
(Continued)

PHASE II - CHEMICAL PARAMETERS

BORING NUMBER	1035					1035					1038				
SAMPLE NUMBER	111552					111553					111548				
SAMPLING DATE	05/05/93					05/05/93					05/05/93				
CHEMICAL PARAMETERS	FLTD	RESULTS	UNITS	L	VQ	FLTD	RESULTS	UNITS	L	VQ	FLTD	RESULTS	UNITS	L	VQ
Semivolatile Organics															
Benzoic acid	UNFI	50.000	ug/L	C	R		NA				UNFI	50.000	ug/L	C	R
Benzyl alcohol	UNFI	10.000	ug/L	C	UJ		NA				UNFI	10.000	ug/L	C	UJ
Butyl benzyl phthalate	UNFI	10.000	ug/L	C	U		NA				UNFI	10.000	ug/L	C	U
Carbazole	UNFI	10.000	ug/L	C	U		NA				UNFI	10.000	ug/L	C	U
Chrysene	UNFI	10.000	ug/L	C	U		NA				UNFI	10.000	ug/L	C	U
Di-n-butyl phthalate	UNFI	10.000	ug/L	C	U		NA				UNFI	10.000	ug/L	C	U
Di-n-octyl phthalate	UNFI	10.000	ug/L	C	R		NA				UNFI	10.000	ug/L	C	R
Dibenzo(a,h)anthracene	UNFI	10.000	ug/L	C	UJ		NA				UNFI	10.000	ug/L	C	UJ
Dibenzofuran	UNFI	10.000	ug/L	C	U		NA				UNFI	10.000	ug/L	C	U
Diethyl phthalate	UNFI	10.000	ug/L	C	U		NA				UNFI	10.000	ug/L	C	U
Dimethyl phthalate	UNFI	10.000	ug/L	C	U		NA				UNFI	10.000	ug/L	C	U
Fluoranthene	UNFI	10.000	ug/L	C	U		NA				UNFI	10.000	ug/L	C	U
Fluorene	UNFI	10.000	ug/L	C	U		NA				UNFI	10.000	ug/L	C	U
Hexachlorobenzene	UNFI	10.000	ug/L	C	U		NA				UNFI	10.000	ug/L	C	U
Hexachlorobutadiene	UNFI	10.000	ug/L	C	U		NA				UNFI	10.000	ug/L	C	U
Hexachlorocyclopentadiene	UNFI	10.000	ug/L	C	U		NA				UNFI	10.000	ug/L	C	U
Hexachloroethane	UNFI	10.000	ug/L	C	U		NA				UNFI	10.000	ug/L	C	U
Indeno(1,2,3-cd)pyrene	UNFI	10.000	ug/L	C	U		NA				UNFI	10.000	ug/L	C	UJ
Isophorone	UNFI	10.000	ug/L	C	U		NA				UNFI	10.000	ug/L	C	U
N-Nitroso-di-n-propylamine	UNFI	10.000	ug/L	C	U		NA				UNFI	10.000	ug/L	C	U
N-Nitrosodiphenylamine	UNFI	10.000	ug/L	C	U		NA				UNFI	10.000	ug/L	C	U
Naphthalene	UNFI	10.000	ug/L	C	U		NA				UNFI	10.000	ug/L	C	U
Nitrobenzene	UNFI	10.000	ug/L	C	U		NA				UNFI	10.000	ug/L	C	U
Pentachlorophenol	UNFI	25.000	ug/L	C	U		NA				UNFI	25.000	ug/L	C	U
Phenanthrene	UNFI	10.000	ug/L	C	U		NA				UNFI	10.000	ug/L	C	U
Phenol	UNFI	10.000	ug/L	C	U		NA				UNFI	10.000	ug/L	C	U
Pyrene	UNFI	10.000	ug/L	C	U		NA				UNFI	10.000	ug/L	C	U
bis(2-Chloroethoxy)methane	UNFI	10.000	ug/L	C	U		NA				UNFI	10.000	ug/L	C	U
bis(2-Chloroethyl)ether	UNFI	10.000	ug/L	C	U		NA				UNFI	10.000	ug/L	C	U
bis(2-Chloroisopropyl) ether	UNFI	10.000	ug/L	C	U		NA				UNFI	10.000	ug/L	C	U
bis(2-Ethylhexyl) phthalate	UNFI	10.000	ug/L	C	UJ		NA				UNFI	10.000	ug/L	C	UJ
p-Chloroaniline	UNFI	10.000	ug/L	C	U		NA				UNFI	10.000	ug/L	C	U
Pesticide Organics/PCBs															
4,4'-DDD	UNFI	0.100	ug/L	C	U		NA				UNFI	0.100	ug/L	C	U
4,4'-DDE	UNFI	0.100	ug/L	C	U		NA				UNFI	0.100	ug/L	C	U
4,4'-DDT	UNFI	0.100	ug/L	C	UJ		NA				UNFI	0.100	ug/L	C	UJ
Aldrin	UNFI	0.050	ug/L	C	U		NA				UNFI	0.050	ug/L	C	U
Aroclor-1016	UNFI	1.000	ug/L	C	U		NA				UNFI	1.000	ug/L	C	U
Aroclor-1221	UNFI	2.000	ug/L	C	U		NA				UNFI	2.000	ug/L	C	U
Aroclor-1232	UNFI	1.000	ug/L	C	U		NA				UNFI	1.000	ug/L	C	U

TABLE C-12A
(Continued)

PHASE II - CHEMICAL PARAMETERS

BORING NUMBER		1035					1035					1038			
SAMPLE NUMBER		111552					111553					111548			
SAMPLING DATE		05/05/93					05/05/93					05/05/93			
CHEMICAL PARAMETERS	FLTD	RESULTS	UNITS	L	VQ	FLTD	RESULTS	UNITS	L	VQ	FLTD	RESULTS	UNITS	L	VQ
Pesticide Organics/PCBs															
Aroclor-1242	UNFI	1.000	ug/L	C	U		NA				UNFI	1.000	ug/L	C	U
Aroclor-1248	UNFI	1.000	ug/L	C	U		NA				UNFI	1.000	ug/L	C	U
Aroclor-1254	UNFI	1.000	ug/L	C	U		NA				UNFI	1.000	ug/L	C	U
Aroclor-1260	UNFI	1.000	ug/L	C	U		NA				UNFI	1.000	ug/L	C	U
Dieldrin	UNFI	0.100	ug/L	C	U		NA				UNFI	0.100	ug/L	C	U
Endosulfan II	UNFI	0.100	ug/L	C	U		NA				UNFI	0.100	ug/L	C	U
Endosulfan sulfate	UNFI	0.100	ug/L	C	U		NA				UNFI	0.100	ug/L	C	U
Endosulfan-I	UNFI	0.050	ug/L	C	U		NA				UNFI	0.050	ug/L	C	U
Endrin	UNFI	0.100	ug/L	C	U		NA				UNFI	0.100	ug/L	C	U
Endrin aldehyde	UNFI	0.100	ug/L	C	U		NA				UNFI	0.100	ug/L	C	U
Endrin ketone	UNFI	0.100	ug/L	C	U		NA				UNFI	0.100	ug/L	C	U
Heptachlor	UNFI	0.050	ug/L	C	U		NA				UNFI	0.050	ug/L	C	U
Heptachlor epoxide	UNFI	0.050	ug/L	C	U		NA				UNFI	0.050	ug/L	C	U
Methoxychlor	UNFI	0.500	ug/L	C	U		NA				UNFI	0.500	ug/L	C	U
Toxaphene	UNFI	5.000	ug/L	C	U		NA				UNFI	5.000	ug/L	C	U
alpha-BHC	UNFI	0.050	ug/L	C	UJ		NA				UNFI	0.050	ug/L	C	UJ
alpha-Chlordane	UNFI	0.050	ug/L	C	U		NA				UNFI	0.050	ug/L	C	U
beta-BHC	UNFI	0.050	ug/L	C	U		NA				UNFI	0.050	ug/L	C	U
delta-BHC	UNFI	0.050	ug/L	C	UJ		NA				UNFI	0.050	ug/L	C	UJ
gamma-BHC (Lindane)	UNFI	0.050	ug/L	C	UJ		NA				UNFI	0.050	ug/L	C	UJ
gamma-Chlordane	UNFI	0.050	ug/L	C	U		NA				UNFI	0.050	ug/L	C	U
General Chemistry															
Alkalinity	UNFI	309.000	mg/L	B	-		NA				UNFI	44.300	mg/L	B	-
Ammonia	UNFI	0.100	mg/L	B	U		NA				UNFI	0.110	mg/L	B	-
Chloride	UNFI	3.950	mg/L	B	-		NA				UNFI	17.720	mg/L	B	-
Fluoride	UNFI	0.360	mg/L	B	-		NA				UNFI	0.520	mg/L	B	-
Nitrate	UNFI	0.930	mg/L	B	J		NA				UNFI	0.160	mg/L	B	J
Phenols	UNFI	0.010	mg/L	B	U		NA				UNFI	0.010	mg/L	B	U
Sulfate	UNFI	67.900	mg/L	B	-		NA				UNFI	154.400	mg/L	B	-
Sulfide	UNFI	0.500	mg/L	B	U		NA				UNFI	0.500	mg/L	B	U
Total Kjeldahl Nitrogen	UNFI	0.210	mg/L	B	-		NA				UNFI	0.100	mg/L	B	U
Total Organic Carbon	UNFI	1.000	mg/L	B	U		NA				UNFI	1.000	mg/L	B	U
Total Organic Halides	UNFI	0.010	mg/L	B	U		NA				UNFI	0.010	mg/L	B	U
Total Organic Nitrogen	UNFI	0.210	mg/L	B	-		NA				UNFI	0.100	mg/L	B	U
Total Phosphorous	UNFI	0.070	mg/L	B	-		NA				UNFI	0.030	mg/L	B	-

000356

TABLE C-12A
(Continued)

PHASE II - CHEMICAL PARAMETERS

BORING NUMBER	1038					1950					1950				
SAMPLE NUMBER	111549					115480					115481				
SAMPLING DATE	05/05/93					06/08/93					06/08/93				
CHEMICAL PARAMETERS	FLTD	RESULTS	UNITS	L	VQ	FLTD	RESULTS	UNITS	L	VQ	FLTD	RESULTS	UNITS	L	VQ
Inorganics															
Aluminum	FILT	0.377	mg/L	C	U		NA					NA			
Aluminum		NA				UNFI	0.030	mg/L	D	U	UNFI	4.320	mg/L	C	-
Antimony	FILT	0.002	mg/L	C	UJ		NA					NA			
Antimony		NA				UNFI	0.059	mg/L	D	U	UNFI	0.059	mg/L	C	U
Arsenic	FILT	0.002	mg/L	C	-		NA					NA			
Arsenic		NA				UNFI	0.001	mg/L	D	-	UNFI	0.002	mg/L	C	-
Barium	FILT	0.043	mg/L	C	-		NA					NA			
Barium		NA				UNFI	0.054	mg/L	D	-	UNFI	0.088	mg/L	C	-
Beryllium	FILT	0.001	mg/L	C	U		NA					NA			
Beryllium		NA				UNFI	0.001	mg/L	D	U	UNFI	0.001	mg/L	C	U
Cadmium	FILT	0.002	mg/L	C	U		NA					NA			
Cadmium		NA				UNFI	0.003	mg/L	D	-	UNFI	0.003	mg/L	C	-
Calcium	FILT	141.000	mg/L	C	-		NA					NA			
Calcium		NA				UNFI	102.000	mg/L	D	-	UNFI	122.000	mg/L	C	-
Chromium	FILT	0.004	mg/L	C	U		NA					NA			
Chromium		NA				UNFI	0.005	mg/L	D	U	UNFI	0.005	mg/L	C	U
Cobalt	FILT	0.003	mg/L	C	U		NA					NA			
Cobalt		NA				UNFI	0.004	mg/L	D	U	UNFI	0.009	mg/L	C	-
Copper	FILT	0.002	mg/L	C	U		NA					NA			
Copper		NA				UNFI	0.008	mg/L	D	U	UNFI	0.013	mg/L	C	U
Cyanide	FILT	0.001	mg/L	C	R		NA					NA			
Cyanide		NA				UNFI	0.002	mg/L	D	U		NA			
Iron	FILT	1.030	mg/L	C	-		NA					NA			
Iron		NA				UNFI	0.104	mg/L	D	U	UNFI	8.920	mg/L	C	-
Lead	FILT	0.001	mg/L	C	U		NA					NA			
Lead		NA				UNFI	0.001	mg/L	D	U	UNFI	0.004	mg/L	C	U
Magnesium	FILT	61.400	mg/L	C	-		NA					NA			
Magnesium		NA				UNFI	80.700	mg/L	D	-	UNFI	88.800	mg/L	C	-
Manganese	FILT	0.113	mg/L	C	-		NA					NA			
Manganese		NA				UNFI	0.203	mg/L	D	-	UNFI	0.286	mg/L	C	-
Mercury	FILT	0.000	mg/L	C	U		NA					NA			
Mercury		NA				UNFI	0.000	mg/L	D	U	UNFI	0.000	mg/L	C	U
Molybdenum	FILT	0.005	mg/L	C	U		NA					NA			
Molybdenum		NA				UNFI	0.014	mg/L	D	-	UNFI	0.020	mg/L	C	-
Nickel	FILT	0.003	mg/L	C	U		NA					NA			
Nickel		NA				UNFI	0.021	mg/L	D	U	UNFI	0.021	mg/L	C	U
Potassium	FILT	2.080	mg/L	C	-		NA					NA			
Potassium		NA				UNFI	3.950	mg/L	D	-	UNFI	3.560	mg/L	C	-
Selenium	FILT	0.001	mg/L	C	UJ		NA					NA			
Selenium		NA				UNFI	0.001	mg/L	D	UJ	UNFI	0.001	mg/L	C	UJ
Silicon	FILT	9.400	mg/L	C	-		NA					NA			
Silicon		NA				UNFI	7.670	mg/L	D	-	UNFI	15.500	mg/L	C	-

TABLE C-12A
(Continued)

PHASE II - CHEMICAL PARAMETERS

BORING NUMBER		1038					1950					1950			
SAMPLE NUMBER		111549					115480					115481			
SAMPLING DATE		05/05/93					06/08/93					06/08/93			
CHEMICAL PARAMETERS	FLTD	RESULTS	UNITS	L	VQ	FLTD	RESULTS	UNITS	L	VQ	FLTD	RESULTS	UNITS	L	VQ
Inorganics															
Silver	FILT	0.002	mg/L	C	U		NA					NA			
Silver		NA				UNFI	0.004	mg/L	D	U	UNFI	0.004	mg/L	C	U
Sodium	FILT	8.520	mg/L	C	-		NA					NA			
Sodium		NA				UNFI	17.300	mg/L	D	-	UNFI	16.200	mg/L	C	-
Thallium	FILT	0.001	mg/L	C	U		NA					NA			
Thallium		NA				UNFI	0.001	mg/L	D	U	UNFI	0.001	mg/L	C	U
Vanadium	FILT	0.009	mg/L	C	U		NA					NA			
Vanadium		NA				UNFI	0.002	mg/L	D	U	UNFI	0.009	mg/L	C	U
Zinc	FILT	0.004	mg/L	C	U		NA					NA			
Zinc		NA				UNFI	0.005	mg/L	D	U	UNFI	0.031	mg/L	C	-
Volatile Organics															
1,1,1-Trichloroethane		NA				UNFI	10.000	ug/L	D	U		NA			
1,1,2,2-Tetrachloroethane		NA				UNFI	10.000	ug/L	D	U		NA			
1,1,2-Trichloroethane		NA				UNFI	10.000	ug/L	D	U		NA			
1,1-Dichloroethane		NA				UNFI	10.000	ug/L	D	U		NA			
1,1-Dichloroethene		NA				UNFI	10.000	ug/L	D	U		NA			
1,2-Dichloroethane		NA				UNFI	10.000	ug/L	D	U		NA			
1,2-Dichloroethene		NA				UNFI	10.000	ug/L	D	U		NA			
1,2-Dichloropropane		NA				UNFI	10.000	ug/L	D	U		NA			
2-Butanone		NA				UNFI	10.000	ug/L	D	U		NA			
2-Hexanone		NA				UNFI	10.000	ug/L	D	UJ		NA			
4-Methyl-2-pentanone		NA				UNFI	10.000	ug/L	D	U		NA			
Acetone		NA				UNFI	10.000	ug/L	D	UJ		NA			
Benzene		NA				UNFI	10.000	ug/L	D	U		NA			
Bromodichloromethane		NA				UNFI	10.000	ug/L	D	U		NA			
Bromoform		NA				UNFI	10.000	ug/L	D	U		NA			
Bromomethane		NA				UNFI	10.000	ug/L	D	UJ		NA			
Carbon Tetrachloride		NA				UNFI	10.000	ug/L	D	U		NA			
Carbon disulfide		NA				UNFI	10.000	ug/L	D	U		NA			
Chlorobenzene		NA				UNFI	10.000	ug/L	D	U		NA			
Chloroethane		NA				UNFI	10.000	ug/L	D	UJ		NA			
Chloroform		NA				UNFI	10.000	ug/L	D	U		NA			
Chloromethane		NA				UNFI	10.000	ug/L	D	UJ		NA			
Dibromochloromethane		NA				UNFI	10.000	ug/L	D	U		NA			
Ethylbenzene		NA				UNFI	10.000	ug/L	D	U		NA			
Methylene chloride		NA				UNFI	10.000	ug/L	D	U		NA			
Styrene		NA				UNFI	10.000	ug/L	D	U		NA			
Tetrachloroethene		NA				UNFI	10.000	ug/L	D	U		NA			
Toluene		NA				UNFI	10.000	ug/L	D	U		NA			
Trichloroethene		NA				UNFI	10.000	ug/L	D	U		NA			

000358

TABLE C-12A
(Continued)

PHASE II - CHEMICAL PARAMETERS

BORING NUMBER		1038				1950				1950			
SAMPLE NUMBER		111549				115480				115481			
SAMPLING DATE		05/05/93				06/08/93				06/08/93			
CHEMICAL PARAMETERS	FLTD	RESULTS	UNITS	L	VQ	FLTD	RESULTS	UNITS	L	VQ	FLTD	RESULTS	UNITS	L	VQ
Volatile Organics															
Vinyl Acetate		NA				UNFI	10.000	ug/L	D	U		NA			
Vinyl chloride		NA				UNFI	10.000	ug/L	D	U		NA			
Xylenes, Total		NA				UNFI	10.000	ug/L	D	U		NA			
cis-1,3-Dichloropropene		NA				UNFI	10.000	ug/L	D	U		NA			
trans-1,3-Dichloropropene		NA				UNFI	10.000	ug/L	D	U		NA			
Semivolatile Organics															
1,2,4-Trichlorobenzene		NA				UNFI	10.000	ug/L	D	U		NA			
1,2-Dichlorobenzene		NA				UNFI	10.000	ug/L	D	U		NA			
1,3-Dichlorobenzene		NA				UNFI	10.000	ug/L	D	U		NA			
1,4-Dichlorobenzene		NA				UNFI	10.000	ug/L	D	U		NA			
2,4,5-Trichlorophenol		NA				UNFI	25.000	ug/L	D	U		NA			
2,4,6-Trichlorophenol		NA				UNFI	10.000	ug/L	D	U		NA			
2,4-Dichlorophenol		NA				UNFI	10.000	ug/L	D	U		NA			
2,4-Dimethylphenol		NA				UNFI	10.000	ug/L	D	U		NA			
2,4-Dinitrophenol		NA				UNFI	25.000	ug/L	D	R		NA			
2,4-Dinitrotoluene		NA				UNFI	10.000	ug/L	D	U		NA			
2,6-Dinitrotoluene		NA				UNFI	10.000	ug/L	D	U		NA			
2-Benzyl-4-chlorophenol		NA				UNFI	10.000	ug/L	D	UJ		NA			
2-Chloronaphthalene		NA				UNFI	10.000	ug/L	D	U		NA			
2-Chlorophenol		NA				UNFI	10.000	ug/L	D	U		NA			
2-Methylnaphthalene		NA				UNFI	10.000	ug/L	D	U		NA			
2-Methylphenol		NA				UNFI	10.000	ug/L	D	U		NA			
2-Nitroaniline		NA				UNFI	25.000	ug/L	D	U		NA			
2-Nitrophenol		NA				UNFI	10.000	ug/L	D	U		NA			
3,3'-Dichlorobenzidine		NA				UNFI	10.000	ug/L	D	U		NA			
3-Nitroaniline		NA				UNFI	25.000	ug/L	D	U		NA			
4,6-Dinitro-2-methylphenol		NA				UNFI	25.000	ug/L	D	UJ		NA			
4-Bromophenyl phenyl ether		NA				UNFI	10.000	ug/L	D	U		NA			
4-Chloro-3-methylphenol		NA				UNFI	10.000	ug/L	D	U		NA			
4-Chlorophenylphenyl ether		NA				UNFI	10.000	ug/L	D	U		NA			
4-Methylphenol		NA				UNFI	10.000	ug/L	D	U		NA			
4-Nitroaniline		NA				UNFI	25.000	ug/L	D	U		NA			
4-Nitrophenol		NA				UNFI	25.000	ug/L	D	UJ		NA			
Acenaphthene		NA				UNFI	10.000	ug/L	D	U		NA			
Acenaphthylene		NA				UNFI	10.000	ug/L	D	U		NA			
Anthracene		NA				UNFI	10.000	ug/L	D	U		NA			
Benzo(a)anthracene		NA				UNFI	10.000	ug/L	D	U		NA			
Benzo(a)pyrene		NA				UNFI	10.000	ug/L	D	U		NA			
Benzo(b)fluoranthene		NA				UNFI	10.000	ug/L	D	U		NA			
Benzo(g,h,i)perylene		NA				UNFI	10.000	ug/L	D	U		NA			

TABLE C-12A
(Continued)

PHASE II - CHEMICAL PARAMETERS

BORING NUMBER		1038				1950				1950			
SAMPLE NUMBER		111549				115480				115481			
SAMPLING DATE		05/05/93				06/08/93				06/08/93			
CHEMICAL PARAMETERS	FLTD	RESULTS	UNITS	L	VQ	FLTD	RESULTS	UNITS	L	VQ	FLTD	RESULTS	UNITS	L	VQ
Semivolatile Organics															
Benzo(k)fluoranthene		NA				UNFI	10.000	ug/L	D	U		NA			
Benzoic acid		NA				UNFI	50.000	ug/L	D	UJ		NA			
Benzyl alcohol		NA				UNFI	10.000	ug/L	D	UJ		NA			
Butyl benzyl phthalate		NA				UNFI	10.000	ug/L	D	U		NA			
Carbazole		NA				UNFI	10.000	ug/L	D	U		NA			
Chrysene		NA				UNFI	10.000	ug/L	D	U		NA			
Di-n-butyl phthalate		NA				UNFI	10.000	ug/L	D	U		NA			
Di-n-octyl phthalate		NA				UNFI	10.000	ug/L	D	U		NA			
Dibenzo(a,h)anthracene		NA				UNFI	10.000	ug/L	D	U		NA			
Dibenzofuran		NA				UNFI	10.000	ug/L	D	U		NA			
Diethyl phthalate		NA				UNFI	10.000	ug/L	D	U		NA			
Dimethyl phthalate		NA				UNFI	10.000	ug/L	D	U		NA			
Fluoranthene		NA				UNFI	10.000	ug/L	D	U		NA			
Fluorene		NA				UNFI	10.000	ug/L	D	U		NA			
Hexachlorobenzene		NA				UNFI	10.000	ug/L	D	U		NA			
Hexachlorobutadiene		NA				UNFI	10.000	ug/L	D	U		NA			
Hexachlorocyclopentadiene		NA				UNFI	10.000	ug/L	D	U		NA			
Hexachloroethane		NA				UNFI	10.000	ug/L	D	U		NA			
Indeno(1,2,3-cd)pyrene		NA				UNFI	10.000	ug/L	D	U		NA			
Isophorone		NA				UNFI	10.000	ug/L	D	U		NA			
N-Nitroso-di-n-propylamine		NA				UNFI	10.000	ug/L	D	U		NA			
N-Nitrosodimethylamine		NA				UNFI	10.000	ug/L	D	U		NA			
N-Nitrosodiphenylamine		NA				UNFI	10.000	ug/L	D	U		NA			
Naphthalene		NA				UNFI	10.000	ug/L	D	U		NA			
Nitrobenzene		NA				UNFI	10.000	ug/L	D	U		NA			
Pentachlorophenol		NA				UNFI	25.000	ug/L	D	UJ		NA			
Phenanthrene		NA				UNFI	10.000	ug/L	D	U		NA			
Phenol		NA				UNFI	10.000	ug/L	D	U		NA			
Pyrene		NA				UNFI	10.000	ug/L	D	U		NA			
Tributyl phosphate		NA				UNFI	10.000	ug/L	D	U		NA			
bis(2-Chloroethoxy)methane		NA				UNFI	10.000	ug/L	D	U		NA			
bis(2-Chloroethyl)ether		NA				UNFI	10.000	ug/L	D	U		NA			
bis(2-Chloroisopropyl) ether		NA				UNFI	10.000	ug/L	D	U		NA			
bis(2-Ethylhexyl) phthalate		NA				UNFI	10.000	ug/L	D	U		NA			
p-Chloroaniline		NA				UNFI	10.000	ug/L	D	U		NA			
Pesticide Organics/PCBs															
4,4'-DDD		NA				UNFI	0.100	ug/L	D	U		NA			
4,4'-DDE		NA				UNFI	0.100	ug/L	D	U		NA			
4,4'-DDT		NA				UNFI	0.100	ug/L	D	U		NA			
Aldrin		NA				UNFI	0.050	ug/L	D	U		NA			

000360

TABLE C-12A
(Continued)

PHASE II - CHEMICAL PARAMETERS

BORING NUMBER		1038				1950				1950			
SAMPLE NUMBER		111549				115480				115481			
SAMPLING DATE		05/05/93				06/08/93				06/08/93			
CHEMICAL PARAMETERS	FLTD	RESULTS	UNITS	L	VQ	FLTD	RESULTS	UNITS	L	VQ	FLTD	RESULTS	UNITS	L	VQ
Pesticide Organics/PCBs															
Aroclor-1016		NA				UNFI	1.000	ug/L	D	U		NA			
Aroclor-1221		NA				UNFI	2.000	ug/L	D	U		NA			
Aroclor-1232		NA				UNFI	1.000	ug/L	D	U		NA			
Aroclor-1242		NA				UNFI	1.000	ug/L	D	U		NA			
Aroclor-1248		NA				UNFI	1.000	ug/L	D	U		NA			
Aroclor-1254		NA				UNFI	1.000	ug/L	D	U		NA			
Aroclor-1260		NA				UNFI	1.000	ug/L	D	U		NA			
Dieldrin		NA				UNFI	0.100	ug/L	D	U		NA			
Endosulfan II		NA				UNFI	0.100	ug/L	D	U		NA			
Endosulfan sulfate		NA				UNFI	0.100	ug/L	D	U		NA			
Endosulfan-I		NA				UNFI	0.050	ug/L	D	U		NA			
Endrin		NA				UNFI	0.100	ug/L	D	U		NA			
Endrin aldehyde		NA				UNFI	0.100	ug/L	D	U		NA			
Endrin ketone		NA				UNFI	0.100	ug/L	D	U		NA			
Heptachlor		NA				UNFI	0.050	ug/L	D	U		NA			
Heptachlor epoxide		NA				UNFI	0.050	ug/L	D	U		NA			
Methoxychlor		NA				UNFI	0.500	ug/L	D	U		NA			
Toxaphene		NA				UNFI	5.000	ug/L	D	U		NA			
alpha-BHC		NA				UNFI	0.050	ug/L	D	U		NA			
alpha-Chlordane		NA				UNFI	0.050	ug/L	D	U		NA			
beta-BHC		NA				UNFI	0.050	ug/L	D	U		NA			
delta-BHC		NA				UNFI	0.050	ug/L	D	U		NA			
gamma-BHC (Lindane)		NA				UNFI	0.050	ug/L	D	U		NA			
gamma-Chlordane		NA				UNFI	0.050	ug/L	D	U		NA			
General Chemistry															
Alkalinity		NA				UNFI	445.000	mg/L	B	-		NA			
Ammonia		NA				UNFI	0.120	mg/L	B	-		NA			
Chloride		NA				UNFI	9.920	mg/L	B	-		NA			
Fluoride		NA				UNFI	1.250	mg/L	B	-		NA			
Nitrate		NA				UNFI	0.800	mg/L	B	J		NA			
Phenols		NA				UNFI	0.010	mg/L	B	U		NA			
Sulfate		NA				UNFI	190.700	mg/L	B	-		NA			
Sulfide		NA				UNFI	7.870	mg/L	B	-		NA			
Total Kjeldahl Nitrogen		NA				UNFI	0.380	mg/L	B	-		NA			
Total Organic Carbon		NA				UNFI	2.240	mg/L	B	-		NA			
Total Organic Halides		NA				UNFI	0.015	mg/L	B	-		NA			
Total Organic Nitrogen		NA				UNFI	0.260	mg/L	B	-		NA			
Total Phosphorous		NA				UNFI	0.210	mg/L	B	-		NA			

TABLE C-12A
(Continued)

PHASE II - CHEMICAL PARAMETERS

BORING NUMBER	1952					1952					2027				
SAMPLE NUMBER	115468					115471					111543				
SAMPLING DATE	05/15/93					05/15/93					04/23/93				
CHEMICAL PARAMETERS	FLTD	RESULTS	UNITS	L	VQ	FLTD	RESULTS	UNITS	L	VQ	FLTD	RESULTS	UNITS	L	VQ
Inorganics															
Aluminum		NA					NA				FILT	0.303	mg/L	C	-
Aluminum	UNFI	0.216	mg/L	C	-	UNFI	53.200	mg/L	C	-		NA			
Antimony		NA					NA				FILT	0.005	mg/L	C	UJ
Antimony	UNFI	0.005	mg/L	C	U	UNFI	0.005	mg/L	C	U		NA			
Arsenic		NA					NA				FILT	0.002	mg/L	C	UJ
Arsenic	UNFI	0.002	mg/L	C	UJ	UNFI	0.004	mg/L	C	-		NA			
Barium		NA					NA				FILT	0.067	mg/L	C	-
Barium	UNFI	0.124	mg/L	C	-	UNFI	0.466	mg/L	C	-		NA			
Beryllium		NA					NA				FILT	0.002	mg/L	C	U
Beryllium	UNFI	0.002	mg/L	C	U	UNFI	0.002	mg/L	C	-		NA			
Cadmium		NA					NA				FILT	0.005	mg/L	C	U
Cadmium	UNFI	0.005	mg/L	C	U	UNFI	0.005	mg/L	C	U		NA			
Calcium		NA					NA				FILT	258.000	mg/L	C	J
Calcium	UNFI	201.000	mg/L	C	-	UNFI	398.000	mg/L	C	-		NA			
Chromium		NA					NA				FILT	0.010	mg/L	C	U
Chromium	UNFI	0.010	mg/L	C	U	UNFI	0.058	mg/L	C	-		NA			
Cobalt		NA					NA				FILT	0.010	mg/L	C	U
Cobalt	UNFI	0.010	mg/L	C	U	UNFI	0.026	mg/L	C	-		NA			
Copper		NA					NA				FILT	0.010	mg/L	C	U
Copper	UNFI	0.010	mg/L	C	U	UNFI	0.071	mg/L	C	-		NA			
Cyanide	UNFI	0.002	mg/L	C	U		NA				UNFI	0.002	mg/L	C	U
Iron		NA					NA				FILT	5.070	mg/L	C	-
Iron	UNFI	0.020	mg/L	C	U	UNFI	75.000	mg/L	C	-		NA			
Lead		NA					NA				FILT	0.002	mg/L	C	U
Lead	UNFI	0.002	mg/L	C	U	UNFI	0.031	mg/L	C	-		NA			
Magnesium		NA					NA				FILT	61.300	mg/L	C	J
Magnesium	UNFI	62.700	mg/L	C	-	UNFI	130.000	mg/L	C	-		NA			
Manganese		NA					NA				FILT	0.657	mg/L	C	-
Manganese	UNFI	0.529	mg/L	C	-	UNFI	1.900	mg/L	C	-		NA			
Mercury		NA					NA				FILT	0.000	mg/L	C	U
Mercury	UNFI	0.000	mg/L	C	U	UNFI	0.000	mg/L	C	U		NA			
Molybdenum		NA					NA				FILT	0.020	mg/L	C	U
Molybdenum	UNFI	0.010	mg/L	C	U	UNFI	0.026	mg/L	C	-		NA			
Nickel		NA					NA				FILT	0.020	mg/L	C	U
Nickel	UNFI	0.065	mg/L	C	-	UNFI	0.118	mg/L	C	-		NA			
Potassium		NA					NA				FILT	6.950	mg/L	C	-
Potassium	UNFI	1.550	mg/L	C	-	UNFI	15.400	mg/L	C	-		NA			
Selenium		NA					NA				FILT	0.002	mg/L	C	UJ
Selenium	UNFI	0.002	mg/L	C	U	UNFI	0.002	mg/L	C	UJ		NA			
Silicon		NA					NA				FILT	5.910	mg/L	C	-
Silicon	UNFI	7.930	mg/L	C	-	UNFI	72.100	mg/L	C	-		NA			
Silver		NA					NA				FILT	0.010	mg/L	C	U

000362

TABLE C-12A
(Continued)

PHASE II - CHEMICAL PARAMETERS

BORING NUMBER	1952					1952					2027				
SAMPLE NUMBER	115468					115471					111543				
SAMPLING DATE	05/15/93					05/15/93					04/23/93				
CHEMICAL PARAMETERS	FLTD	RESULTS	UNITS	L	VQ	FLTD	RESULTS	UNITS	L	VQ	FLTD	RESULTS	UNITS	L	VQ
Inorganics															
Silver	UNFI	0.010	mg/L	C	U	UNFI	0.020	mg/L	C	-		NA			
Sodium		NA					NA				FILT	41.900	mg/L	C	J
Sodium	UNFI	12.000	mg/L	C	-	UNFI	12.200	mg/L	C	-		NA			
Thallium		NA					NA				FILT	0.002	mg/L	C	UJ
Thallium	UNFI	0.002	mg/L	C	U	UNFI	0.002	mg/L	C	U		NA			
Vanadium		NA					NA				FILT	0.010	mg/L	C	U
Vanadium	UNFI	0.010	mg/L	C	U	UNFI	0.118	mg/L	C	-		NA			
Zinc		NA					NA				FILT	0.006	mg/L	C	U
Zinc	UNFI	0.019	mg/L	C	-	UNFI	0.212	mg/L	C	-		NA			
Volatile Organics															
1,1,1-Trichloroethane	UNFI	10.000	ug/L	C	U		NA				UNFI	10.000	ug/L	C	U
1,1,2,2-Tetrachloroethane	UNFI	10.000	ug/L	C	U		NA				UNFI	10.000	ug/L	C	U
1,1,2-Trichloroethane	UNFI	10.000	ug/L	C	U		NA				UNFI	10.000	ug/L	C	U
1,1-Dichloroethane	UNFI	10.000	ug/L	C	U		NA				UNFI	10.000	ug/L	C	U
1,1-Dichloroethene	UNFI	10.000	ug/L	C	U		NA				UNFI	10.000	ug/L	C	U
1,2-Dichloroethane	UNFI	10.000	ug/L	C	U		NA				UNFI	10.000	ug/L	C	U
1,2-Dichloroethene	UNFI	16.000	ug/L	C	-		NA				UNFI	10.000	ug/L	C	U
1,2-Dichloropropane	UNFI	10.000	ug/L	C	U		NA				UNFI	10.000	ug/L	C	U
2-Butanone	UNFI	10.000	ug/L	C	UJ		NA				UNFI	10.000	ug/L	C	U
2-Hexanone	UNFI	10.000	ug/L	C	U		NA				UNFI	10.000	ug/L	C	UJ
4-Methyl-2-pentanone	UNFI	10.000	ug/L	C	UJ		NA				UNFI	10.000	ug/L	C	U
Acetone	UNFI	10.000	ug/L	C	UJ		NA				UNFI	10.000	ug/L	C	U
Benzene	UNFI	10.000	ug/L	C	U		NA				UNFI	10.000	ug/L	C	U
Bromodichloromethane	UNFI	10.000	ug/L	C	U		NA				UNFI	10.000	ug/L	C	U
Bromoform	UNFI	10.000	ug/L	C	U		NA				UNFI	10.000	ug/L	C	U
Bromomethane	UNFI	10.000	ug/L	C	U		NA				UNFI	10.000	ug/L	C	U
Carbon Tetrachloride	UNFI	10.000	ug/L	C	U		NA				UNFI	10.000	ug/L	C	U
Carbon disulfide	UNFI	10.000	ug/L	C	U		NA				UNFI	10.000	ug/L	C	U
Chlorobenzene	UNFI	10.000	ug/L	C	U		NA				UNFI	10.000	ug/L	C	U
Chloroethane	UNFI	10.000	ug/L	C	UJ		NA				UNFI	10.000	ug/L	C	U
Chloroform	UNFI	10.000	ug/L	C	U		NA				UNFI	10.000	ug/L	C	U
Chloromethane	UNFI	10.000	ug/L	C	U		NA				UNFI	10.000	ug/L	C	UJ
Dibromochloromethane	UNFI	10.000	ug/L	C	U		NA				UNFI	10.000	ug/L	C	U
Ethylbenzene	UNFI	10.000	ug/L	C	U		NA				UNFI	10.000	ug/L	C	U
Methylene chloride	UNFI	11.000	ug/L	C	UJ		NA				UNFI	10.000	ug/L	C	UJ
Styrene	UNFI	10.000	ug/L	C	U		NA				UNFI	10.000	ug/L	C	U
Tetrachloroethene	UNFI	10.000	ug/L	C	U		NA				UNFI	10.000	ug/L	C	U
Toluene	UNFI	10.000	ug/L	C	U		NA				UNFI	10.000	ug/L	C	U
Trichloroethene	UNFI	10.000	ug/L	C	U		NA				UNFI	10.000	ug/L	C	U
Vinyl Acetate	UNFI	10.000	ug/L	C	UJ		NA				UNFI	10.000	ug/L	C	U

TABLE C-12A
(Continued)

PHASE II - CHEMICAL PARAMETERS

BORING NUMBER	1952					1952					2027				
SAMPLE NUMBER	115468					115471					111543				
SAMPLING DATE	05/15/93					05/15/93					04/23/93				
CHEMICAL PARAMETERS	FLTD	RESULTS	UNITS	L	VQ	FLTD	RESULTS	UNITS	L	VQ	FLTD	RESULTS	UNITS	L	VQ
Volatile Organics															
Vinyl chloride	UNFI	10.000	ug/L	C	UJ		NA				UNFI	10.000	ug/L	C	UJ
Xylenes, Total	UNFI	10.000	ug/L	C	U		NA				UNFI	10.000	ug/L	C	U
cis-1,3-Dichloropropene	UNFI	10.000	ug/L	C	U		NA				UNFI	10.000	ug/L	C	U
trans-1,3-Dichloropropene	UNFI	10.000	ug/L	C	U		NA				UNFI	10.000	ug/L	C	U
Semivolatile Organics															
1,2,4-Trichlorobenzene	UNFI	10.000	ug/L	C	U		NA				UNFI	10.000	ug/L	C	U
1,2-Dichlorobenzene	UNFI	10.000	ug/L	C	U		NA				UNFI	10.000	ug/L	C	U
1,3-Dichlorobenzene	UNFI	10.000	ug/L	C	U		NA				UNFI	10.000	ug/L	C	U
1,4-Dichlorobenzene	UNFI	10.000	ug/L	C	U		NA				UNFI	10.000	ug/L	C	U
2,4,5-Trichlorophenol	UNFI	25.000	ug/L	C	U		NA				UNFI	25.000	ug/L	C	U
2,4,6-Trichlorophenol	UNFI	10.000	ug/L	C	U		NA				UNFI	10.000	ug/L	C	U
2,4-Dichlorophenol	UNFI	10.000	ug/L	C	U		NA				UNFI	10.000	ug/L	C	U
2,4-Dimethylphenol	UNFI	10.000	ug/L	C	U		NA				UNFI	10.000	ug/L	C	U
2,4-Dinitrophenol	UNFI	25.000	ug/L	C	UJ		NA				UNFI	50.000	ug/L	C	R
2,4-Dinitrotoluene	UNFI	10.000	ug/L	C	U		NA				UNFI	10.000	ug/L	C	UJ
2,6-Dinitrotoluene	UNFI	10.000	ug/L	C	U		NA				UNFI	10.000	ug/L	C	U
2-Benzyl-4-chlorophenol	UNFI	10.000	ug/L	C	U		NA				UNFI	10.000	ug/L	C	U
2-Chloronaphthalene	UNFI	10.000	ug/L	C	U		NA				UNFI	10.000	ug/L	C	U
2-Chlorophenol	UNFI	10.000	ug/L	C	U		NA				UNFI	10.000	ug/L	C	U
2-Methylnaphthalene	UNFI	10.000	ug/L	C	U		NA				UNFI	10.000	ug/L	C	U
2-Methylphenol	UNFI	10.000	ug/L	C	U		NA				UNFI	10.000	ug/L	C	U
2-Nitroaniline	UNFI	25.000	ug/L	C	U		NA				UNFI	25.000	ug/L	C	U
2-Nitrophenol	UNFI	10.000	ug/L	C	U		NA				UNFI	10.000	ug/L	C	U
3,3'-Dichlorobenzidine	UNFI	10.000	ug/L	C	U		NA				UNFI	10.000	ug/L	C	U
3-Nitroaniline	UNFI	25.000	ug/L	C	U		NA				UNFI	25.000	ug/L	C	U
4,6-Dinitro-2-methylphenol	UNFI	25.000	ug/L	C	U		NA				UNFI	25.000	ug/L	C	R
4-Bromophenyl phenyl ether	UNFI	10.000	ug/L	C	U		NA				UNFI	10.000	ug/L	C	U
4-Chloro-3-methylphenol	UNFI	10.000	ug/L	C	U		NA				UNFI	10.000	ug/L	C	U
4-Chlorophenylphenyl ether	UNFI	10.000	ug/L	C	U		NA				UNFI	10.000	ug/L	C	U
4-Methylphenol	UNFI	10.000	ug/L	C	U		NA				UNFI	10.000	ug/L	C	U
4-Nitroaniline	UNFI	25.000	ug/L	C	U		NA				UNFI	25.000	ug/L	C	U
4-Nitrophenol	UNFI	25.000	ug/L	C	U		NA				UNFI	25.000	ug/L	C	UJ
Acenaphthene	UNFI	10.000	ug/L	C	U		NA				UNFI	10.000	ug/L	C	U
Acenaphthylene	UNFI	10.000	ug/L	C	U		NA				UNFI	10.000	ug/L	C	U
Anthracene	UNFI	10.000	ug/L	C	U		NA				UNFI	10.000	ug/L	C	U
Benzo(a)anthracene	UNFI	10.000	ug/L	C	U		NA				UNFI	10.000	ug/L	C	U
Benzo(a)pyrene	UNFI	10.000	ug/L	C	U		NA				UNFI	10.000	ug/L	C	U
Benzo(b)fluoranthene	UNFI	10.000	ug/L	C	U		NA				UNFI	10.000	ug/L	C	U
Benzo(g,h,i)perylene	UNFI	10.000	ug/L	C	U		NA				UNFI	10.000	ug/L	C	U
Benzo(k)fluoranthene	UNFI	10.000	ug/L	C	U		NA				UNFI	10.000	ug/L	C	U

TABLE C-12A
(Continued)

PHASE II - CHEMICAL PARAMETERS

BORING NUMBER	1952					1952					2027				
SAMPLE NUMBER	115468					115471					111543				
SAMPLING DATE	05/15/93					05/15/93					04/23/93				
CHEMICAL PARAMETERS	FLTD	RESULTS	UNITS	L	VQ	FLTD	RESULTS	UNITS	L	VQ	FLTD	RESULTS	UNITS	L	VQ
Semivolatile Organics															
Benzoic acid	UNFI	50.000	ug/L	C	UJ		NA				UNFI	50.000	ug/L	C	R
Benzyl alcohol	UNFI	10.000	ug/L	C	R		NA				UNFI	10.000	ug/L	C	UJ
Butyl benzyl phthalate	UNFI	10.000	ug/L	C	U		NA				UNFI	10.000	ug/L	C	U
Carbazole	UNFI	10.000	ug/L	C	U		NA				UNFI	10.000	ug/L	C	U
Chrysene	UNFI	10.000	ug/L	C	U		NA				UNFI	10.000	ug/L	C	U
Di-n-butyl phthalate	UNFI	10.000	ug/L	C	U		NA				UNFI	10.000	ug/L	C	U
Di-n-octyl phthalate	UNFI	10.000	ug/L	C	U		NA				UNFI	10.000	ug/L	C	UJ
Dibenzo(a,h)anthracene	UNFI	10.000	ug/L	C	U		NA				UNFI	10.000	ug/L	C	U
Dibenzofuran	UNFI	10.000	ug/L	C	U		NA				UNFI	10.000	ug/L	C	U
Diethyl phthalate	UNFI	10.000	ug/L	C	U		NA				UNFI	10.000	ug/L	C	U
Dimethyl phthalate	UNFI	10.000	ug/L	C	U		NA				UNFI	10.000	ug/L	C	U
Fluoranthene	UNFI	10.000	ug/L	C	U		NA				UNFI	10.000	ug/L	C	U
Fluorene	UNFI	10.000	ug/L	C	U		NA				UNFI	10.000	ug/L	C	U
Hexachlorobenzene	UNFI	10.000	ug/L	C	U		NA				UNFI	10.000	ug/L	C	U
Hexachlorobutadiene	UNFI	10.000	ug/L	C	U		NA				UNFI	10.000	ug/L	C	U
Hexachlorocyclopentadiene	UNFI	10.000	ug/L	C	U		NA				UNFI	10.000	ug/L	C	UJ
Hexachloroethane	UNFI	10.000	ug/L	C	U		NA				UNFI	10.000	ug/L	C	U
Indeno(1,2,3-cd)pyrene	UNFI	10.000	ug/L	C	U		NA				UNFI	10.000	ug/L	C	U
Isophorone	UNFI	10.000	ug/L	C	U		NA				UNFI	10.000	ug/L	C	U
N-Nitroso-di-n-propylamine	UNFI	10.000	ug/L	C	U		NA				UNFI	10.000	ug/L	C	U
N-Nitrosodimethylamine	UNFI	10.000	ug/L	C	U		NA				UNFI	10.000	ug/L	C	U
N-Nitrosodiphenylamine	UNFI	10.000	ug/L	C	U		NA				UNFI	10.000	ug/L	C	U
Naphthalene	UNFI	10.000	ug/L	C	U		NA				UNFI	10.000	ug/L	C	U
Nitrobenzene	UNFI	10.000	ug/L	C	U		NA				UNFI	10.000	ug/L	C	U
Pentachlorophenol	UNFI	25.000	ug/L	C	U		NA				UNFI	25.000	ug/L	C	U
Phenanthrene	UNFI	10.000	ug/L	C	U		NA				UNFI	10.000	ug/L	C	U
Phenol	UNFI	10.000	ug/L	C	U		NA				UNFI	10.000	ug/L	C	U
Pyrene	UNFI	10.000	ug/L	C	U		NA				UNFI	10.000	ug/L	C	U
Tributyl phosphate	UNFI	10.000	ug/L	C	U		NA				UNFI	10.000	ug/L	C	U
bis(2-Chloroethoxy)methane	UNFI	10.000	ug/L	C	U		NA				UNFI	10.000	ug/L	C	U
bis(2-Chloroethyl)ether	UNFI	10.000	ug/L	C	U		NA				UNFI	10.000	ug/L	C	U
bis(2-Chloroisopropyl) ether	UNFI	10.000	ug/L	C	U		NA				UNFI	10.000	ug/L	C	U
bis(2-Ethylhexyl) phthalate	UNFI	10.000	ug/L	C	U		NA				UNFI	10.000	ug/L	C	U
p-Chloroaniline	UNFI	10.000	ug/L	C	U		NA				UNFI	10.000	ug/L	C	U
Pesticide Organics/PCBs															
4,4'-DDD	UNFI	0.100	ug/L	C	U		NA				UNFI	0.100	ug/L	C	U
4,4'-DDE	UNFI	0.100	ug/L	C	U		NA				UNFI	0.100	ug/L	C	U
4,4'-DDT	UNFI	0.100	ug/L	C	U		NA				UNFI	0.100	ug/L	C	U
Aldrin	UNFI	0.050	ug/L	C	U		NA				UNFI	0.050	ug/L	C	U
Aroclor-1016	UNFI	1.000	ug/L	C	U		NA				UNFI	1.000	ug/L	C	U

TABLE C-12A
(Continued)

PHASE II - CHEMICAL PARAMETERS

BORING NUMBER	1952					1952					2027				
SAMPLE NUMBER	115468					115471					111543				
SAMPLING DATE	05/15/93					05/15/93					04/23/93				
CHEMICAL PARAMETERS	FLTD	RESULTS	UNITS	L	VQ	FLTD	RESULTS	UNITS	L	VQ	FLTD	RESULTS	UNITS	L	VQ
Pesticide Organics/PCBs															
Aroclor-1221	UNFI	2.000	ug/L	C	U		NA				UNFI	2.000	ug/L	C	U
Aroclor-1232	UNFI	1.000	ug/L	C	U		NA				UNFI	1.000	ug/L	C	U
Aroclor-1242	UNFI	1.000	ug/L	C	U		NA				UNFI	1.000	ug/L	C	U
Aroclor-1248	UNFI	1.000	ug/L	C	U		NA				UNFI	1.000	ug/L	C	U
Aroclor-1254	UNFI	1.000	ug/L	C	U		NA				UNFI	1.000	ug/L	C	U
Aroclor-1260	UNFI	1.000	ug/L	C	U		NA				UNFI	1.000	ug/L	C	U
Dieldrin	UNFI	0.100	ug/L	C	U		NA				UNFI	0.100	ug/L	C	U
Endosulfan II	UNFI	0.100	ug/L	C	U		NA				UNFI	0.100	ug/L	C	U
Endosulfan sulfate	UNFI	0.100	ug/L	C	U		NA				UNFI	0.100	ug/L	C	U
Endosulfan-I	UNFI	0.050	ug/L	C	U		NA				UNFI	0.050	ug/L	C	U
Endrin	UNFI	0.100	ug/L	C	U		NA				UNFI	0.100	ug/L	C	U
Endrin aldehyde	UNFI	0.100	ug/L	C	U		NA				UNFI	0.100	ug/L	C	U
Endrin ketone	UNFI	0.100	ug/L	C	U		NA				UNFI	0.100	ug/L	C	U
Heptachlor	UNFI	0.050	ug/L	C	U		NA				UNFI	0.050	ug/L	C	U
Heptachlor epoxide	UNFI	0.050	ug/L	C	U		NA				UNFI	0.050	ug/L	C	U
Methoxychlor	UNFI	0.500	ug/L	C	U		NA				UNFI	0.500	ug/L	C	U
Toxaphene	UNFI	5.000	ug/L	C	U		NA				UNFI	5.000	ug/L	C	U
alpha-BHC	UNFI	0.050	ug/L	C	U		NA				UNFI	0.050	ug/L	C	UJ
alpha-Chlordane	UNFI	0.050	ug/L	C	U		NA				UNFI	0.050	ug/L	C	U
beta-BHC	UNFI	0.050	ug/L	C	U		NA				UNFI	0.050	ug/L	C	U
delta-BHC	UNFI	0.050	ug/L	C	U		NA				UNFI	0.050	ug/L	C	UJ
gamma-BHC (Lindane)	UNFI	0.050	ug/L	C	U		NA				UNFI	0.050	ug/L	C	UJ
gamma-Chlordane	UNFI	0.050	ug/L	C	U		NA				UNFI	0.050	ug/L	C	U
General Chemistry															
Alkalinity	UNFI	625.000	mg/L	B	-		NA				UNFI	410.000	mg/L	B	-
Ammonia	UNFI	0.100	mg/L	B	U		NA				UNFI	0.340	mg/L	B	-
Chloride	UNFI	27.000	mg/L	B	-		NA				UNFI	135.200	mg/L	B	-
Fluoride	UNFI	0.190	mg/L	B	-		NA				UNFI	0.260	mg/L	B	-
Nitrate	UNFI	0.100	mg/L	B	R		NA				UNFI	2.330	mg/L	B	J
Phenols	UNFI	0.010	mg/L	B	U		NA				UNFI	0.010	mg/L	B	U
Phosphorus	UNFI	0.910	mg/L	B	-		NA					NA			
Sulfate	UNFI	99.800	mg/L	B	-		NA				UNFI	333.300	mg/L	B	-
Sulfide	UNFI	0.500	mg/L	B	U		NA				UNFI	0.500	mg/L	B	U
Total Kjeldahl Nitrogen	UNFI	0.670	mg/L	B	-		NA				UNFI	0.580	mg/L	B	-
Total Organic Carbon	UNFI	2.800	mg/L	B	-		NA				UNFI	1.550	mg/L	B	-
Total Organic Halides	UNFI	0.094	mg/L	B	J		NA				UNFI	0.010	mg/L	B	U
Total Organic Nitrogen	UNFI	0.670	mg/L	B	-		NA				UNFI	0.240	mg/L	B	-
Total Phosphorous		NA					NA				UNFI	0.020	mg/L	B	U

000386

TABLE C-12A
(Continued)

PHASE II - CHEMICAL PARAMETERS

BORING NUMBER	2037					2052					2947				
SAMPLE NUMBER	111540					111546					115473				
SAMPLING DATE	04/22/93					04/29/93					05/19/93				
CHEMICAL PARAMETERS	FLTD	RESULTS	UNITS	L	VQ	FLTD	RESULTS	UNITS	L	VQ	FLTD	RESULTS	UNITS	L	VQ
Inorganics															
Aluminum	FILT	0.240	mg/L	C	U	FILT	0.091	mg/L	C	-	NA				
Aluminum	NA					NA					UNFI	0.275	mg/L	D	U
Antimony	FILT	0.005	mg/L	C	UJ	FILT	0.001	mg/L	C	UJ	NA				
Antimony	NA					NA					UNFI	0.005	mg/L	D	U
Arsenic	FILT	0.002	mg/L	C	UJ	FILT	0.001	mg/L	C	U	NA				
Arsenic	NA					NA					UNFI	0.002	mg/L	D	U
Barium	FILT	0.069	mg/L	C	-	FILT	0.072	mg/L	C	J	NA				
Barium	NA					NA					UNFI	0.110	mg/L	D	-
Beryllium	FILT	0.002	mg/L	C	U	FILT	0.003	mg/L	C	U	NA				
Beryllium	NA					NA					UNFI	0.002	mg/L	D	U
Cadmium	FILT	0.005	mg/L	C	U	FILT	0.002	mg/L	C	U	NA				
Cadmium	NA					NA					UNFI	0.005	mg/L	D	U
Calcium	FILT	141.000	mg/L	C	J	FILT	153.000	mg/L	C	-	NA				
Calcium	NA					NA					UNFI	159.000	mg/L	D	-
Chromium	FILT	0.010	mg/L	C	U	FILT	0.004	mg/L	C	U	NA				
Chromium	NA					NA					UNFI	0.010	mg/L	D	U
Cobalt	FILT	0.010	mg/L	C	U	FILT	0.003	mg/L	C	U	NA				
Cobalt	NA					NA					UNFI	0.010	mg/L	D	U
Copper	FILT	0.010	mg/L	C	U	FILT	0.005	mg/L	C	U	NA				
Copper	NA					NA					UNFI	0.010	mg/L	D	U
Cyanide	UNFI	0.002	mg/L	C	U	UNFI	0.001	mg/L	C	U	UNFI	0.002	mg/L	D	UJ
Iron	FILT	3.090	mg/L	C	-	FILT	2.320	mg/L	C	-	NA				
Iron	NA					NA					UNFI	4.660	mg/L	D	-
Lead	FILT	0.002	mg/L	C	U	FILT	0.001	mg/L	C	U	NA				
Lead	NA					NA					UNFI	0.002	mg/L	D	U
Magnesium	FILT	29.000	mg/L	C	J	FILT	33.800	mg/L	C	-	NA				
Magnesium	NA					NA					UNFI	31.000	mg/L	D	-
Manganese	FILT	0.320	mg/L	C	-	FILT	0.558	mg/L	C	-	NA				
Manganese	NA					NA					UNFI	0.279	mg/L	D	-
Mercury	FILT	0.000	mg/L	C	U	FILT	0.000	mg/L	C	U	NA				
Mercury	NA					NA					UNFI	0.000	mg/L	D	U
Molybdenum	FILT	0.020	mg/L	C	U	FILT	0.006	mg/L	C	U	NA				
Molybdenum	NA					NA					UNFI	0.010	mg/L	D	U
Nickel	FILT	0.020	mg/L	C	U	FILT	0.003	mg/L	C	U	NA				
Nickel	NA					NA					UNFI	0.020	mg/L	D	U
Potassium	FILT	3.070	mg/L	C	-	FILT	1.240	mg/L	C	-	NA				
Potassium	NA					NA					UNFI	3.190	mg/L	D	-
Selenium	FILT	0.002	mg/L	C	UJ	FILT	0.001	mg/L	C	U	NA				
Selenium	NA					NA					UNFI	0.002	mg/L	D	U
Silicon	FILT	5.940	mg/L	C	-	FILT	6.470	mg/L	C	-	NA				
Silicon	NA					NA					UNFI	6.270	mg/L	D	-
Silver	FILT	0.010	mg/L	C	U	FILT	0.002	mg/L	C	U	NA				

TABLE C-12A
(Continued)

PHASE II - CHEMICAL PARAMETERS

BORING NUMBER	2037					2052					2947				
SAMPLE NUMBER	111540					111546					115473				
SAMPLING DATE	04/22/93					04/29/93					05/19/93				
CHEMICAL PARAMETERS	FLTD	RESULTS	UNITS	L	VQ	FLTD	RESULTS	UNITS	L	VQ	FLTD	RESULTS	UNITS	L	VQ
Inorganics															
Silver		NA					NA				UNFI	0.010	mg/L	D	U
Sodium	FILT	15.300	mg/L	C	J	FILT	12.800	mg/L	C	-		NA			
Sodium		NA					NA				UNFI	14.000	mg/L	D	-
Thallium	FILT	0.002	mg/L	C	UJ	FILT	0.001	mg/L	C	U		NA			
Thallium		NA					NA				UNFI	0.002	mg/L	D	UJ
Vanadium	FILT	0.010	mg/L	C	U	FILT	0.008	mg/L	C	U		NA			
Vanadium		NA					NA				UNFI	0.010	mg/L	D	U
Zinc	FILT	0.005	mg/L	C	U	FILT	0.011	mg/L	C	U		NA			
Zinc		NA					NA				UNFI	0.005	mg/L	D	U
Volatile Organics															
1,1,1-Trichloroethane	UNFI	10.000	ug/L	C	U	UNFI	10.000	ug/L	C	U	UNFI	10.000	ug/L	D	U
1,1,2,2-Tetrachloroethane	UNFI	10.000	ug/L	C	U	UNFI	10.000	ug/L	C	U	UNFI	10.000	ug/L	D	U
1,1,2-Trichloroethane	UNFI	10.000	ug/L	C	U	UNFI	10.000	ug/L	C	U	UNFI	10.000	ug/L	D	U
1,1-Dichloroethane	UNFI	10.000	ug/L	C	U	UNFI	10.000	ug/L	C	U	UNFI	10.000	ug/L	D	U
1,1-Dichloroethene	UNFI	10.000	ug/L	C	U	UNFI	10.000	ug/L	C	U	UNFI	10.000	ug/L	D	U
1,2-Dichloroethane	UNFI	10.000	ug/L	C	U	UNFI	10.000	ug/L	C	U	UNFI	10.000	ug/L	D	U
1,2-Dichloroethene	UNFI	10.000	ug/L	C	U	UNFI	10.000	ug/L	C	U	UNFI	10.000	ug/L	D	U
1,2-Dichloropropane	UNFI	10.000	ug/L	C	U	UNFI	10.000	ug/L	C	U	UNFI	10.000	ug/L	D	U
2-Butanone	UNFI	10.000	ug/L	C	U	UNFI	10.000	ug/L	C	U	UNFI	10.000	ug/L	D	UJ
2-Hexanone	UNFI	10.000	ug/L	C	UJ	UNFI	10.000	ug/L	C	UJ	UNFI	10.000	ug/L	D	UJ
4-Methyl-2-pentanone	UNFI	10.000	ug/L	C	UJ	UNFI	10.000	ug/L	C	U	UNFI	10.000	ug/L	D	UJ
Acetone	UNFI	10.000	ug/L	C	U	UNFI	2.000	ug/L	C	J	UNFI	10.000	ug/L	D	U
Benzene	UNFI	10.000	ug/L	C	U	UNFI	10.000	ug/L	C	U	UNFI	10.000	ug/L	D	U
Bromodichloromethane	UNFI	10.000	ug/L	C	U	UNFI	10.000	ug/L	C	U	UNFI	10.000	ug/L	D	U
Bromoform	UNFI	10.000	ug/L	C	U	UNFI	10.000	ug/L	C	U	UNFI	10.000	ug/L	D	U
Bromomethane	UNFI	10.000	ug/L	C	U	UNFI	10.000	ug/L	C	U	UNFI	10.000	ug/L	D	U
Carbon Tetrachloride	UNFI	10.000	ug/L	C	U	UNFI	10.000	ug/L	C	U	UNFI	10.000	ug/L	D	U
Carbon disulfide	UNFI	10.000	ug/L	C	U	UNFI	10.000	ug/L	C	U	UNFI	10.000	ug/L	D	U
Chlorobenzene	UNFI	10.000	ug/L	C	U	UNFI	10.000	ug/L	C	U	UNFI	10.000	ug/L	D	U
Chloroethane	UNFI	10.000	ug/L	C	U	UNFI	10.000	ug/L	C	U	UNFI	10.000	ug/L	D	U
Chloroform	UNFI	10.000	ug/L	C	U	UNFI	10.000	ug/L	C	U	UNFI	10.000	ug/L	D	U
Chloromethane	UNFI	10.000	ug/L	C	U	UNFI	10.000	ug/L	C	UJ	UNFI	10.000	ug/L	D	U
Dibromochloromethane	UNFI	10.000	ug/L	C	U	UNFI	10.000	ug/L	C	U	UNFI	10.000	ug/L	D	U
Ethylbenzene	UNFI	10.000	ug/L	C	U	UNFI	10.000	ug/L	C	U	UNFI	10.000	ug/L	D	U
Methylene chloride	UNFI	10.000	ug/L	C	UJ	UNFI	10.000	ug/L	C	U	UNFI	2.000	ug/L	D	UJ
Styrene	UNFI	10.000	ug/L	C	U	UNFI	10.000	ug/L	C	U	UNFI	10.000	ug/L	D	U
Tetrachloroethene	UNFI	10.000	ug/L	C	U	UNFI	10.000	ug/L	C	U	UNFI	10.000	ug/L	D	U
Toluene	UNFI	10.000	ug/L	C	U	UNFI	10.000	ug/L	C	U	UNFI	10.000	ug/L	D	U
Trichloroethene	UNFI	10.000	ug/L	C	U	UNFI	10.000	ug/L	C	U	UNFI	10.000	ug/L	D	U
Vinyl Acetate	UNFI	10.000	ug/L	C	U	UNFI	10.000	ug/L	C	U	UNFI	10.000	ug/L	D	UJ

000368

TABLE C-12A
(Continued)

PHASE II - CHEMICAL PARAMETERS

BORING NUMBER	2037					2052					2947				
SAMPLE NUMBER	111540					111546					115473				
SAMPLING DATE	04/22/93					04/29/93					05/19/93				
CHEMICAL PARAMETERS	FLTD	RESULTS	UNITS	L	VQ	FLTD	RESULTS	UNITS	L	VQ	FLTD	RESULTS	UNITS	L	VQ
Volatile Organics															
Vinyl chloride	UNFI	10.000	ug/L	C	U	UNFI	10.000	ug/L	C	UJ	UNFI	10.000	ug/L	D	U
Xylenes, Total	UNFI	10.000	ug/L	C	U	UNFI	10.000	ug/L	C	U	UNFI	10.000	ug/L	D	U
cis-1,3-Dichloropropene	UNFI	10.000	ug/L	C	U	UNFI	10.000	ug/L	C	U	UNFI	10.000	ug/L	D	U
trans-1,3-Dichloropropene	UNFI	10.000	ug/L	C	U	UNFI	10.000	ug/L	C	U	UNFI	10.000	ug/L	D	U
Semivolatile Organics															
1,2,4-Trichlorobenzene	UNFI	10.000	ug/L	C	U	UNFI	10.000	ug/L	C	U	UNFI	10.000	ug/L	D	U
1,2-Dichlorobenzene	UNFI	10.000	ug/L	C	U	UNFI	10.000	ug/L	C	U	UNFI	10.000	ug/L	D	U
1,3-Dichlorobenzene	UNFI	10.000	ug/L	C	U	UNFI	10.000	ug/L	C	U	UNFI	10.000	ug/L	D	U
1,4-Dichlorobenzene	UNFI	10.000	ug/L	C	U	UNFI	10.000	ug/L	C	U	UNFI	10.000	ug/L	D	U
2,4,5-Trichlorophenol	UNFI	25.000	ug/L	C	U	UNFI	25.000	ug/L	C	U	UNFI	25.000	ug/L	D	U
2,4,6-Trichlorophenol	UNFI	10.000	ug/L	C	U	UNFI	10.000	ug/L	C	U	UNFI	10.000	ug/L	D	U
2,4-Dichlorophenol	UNFI	10.000	ug/L	C	U	UNFI	10.000	ug/L	C	U	UNFI	10.000	ug/L	D	U
2,4-Dimethylphenol	UNFI	10.000	ug/L	C	U	UNFI	10.000	ug/L	C	U	UNFI	10.000	ug/L	D	U
2,4-Dinitrophenol	UNFI	25.000	ug/L	C	R	UNFI	50.000	ug/L	C	UJ	UNFI	25.000	ug/L	D	UJ
2,4-Dinitrotoluene	UNFI	10.000	ug/L	C	UJ	UNFI	10.000	ug/L	C	U	UNFI	10.000	ug/L	D	U
2,6-Dinitrotoluene	UNFI	10.000	ug/L	C	U	UNFI	10.000	ug/L	C	U	UNFI	10.000	ug/L	D	U
2-Benzyl-4-chlorophenol	UNFI	10.000	ug/L	C	U		NA				UNFI	10.000	ug/L	D	U
2-Chloronaphthalene	UNFI	10.000	ug/L	C	U	UNFI	10.000	ug/L	C	U	UNFI	10.000	ug/L	D	U
2-Chlorophenol	UNFI	10.000	ug/L	C	U	UNFI	10.000	ug/L	C	U	UNFI	10.000	ug/L	D	U
2-Methylnaphthalene	UNFI	10.000	ug/L	C	U	UNFI	10.000	ug/L	C	U	UNFI	10.000	ug/L	D	U
2-Methylphenol	UNFI	10.000	ug/L	C	U	UNFI	10.000	ug/L	C	U	UNFI	10.000	ug/L	D	U
2-Nitroaniline	UNFI	25.000	ug/L	C	U	UNFI	25.000	ug/L	C	U	UNFI	25.000	ug/L	D	U
2-Nitrophenol	UNFI	10.000	ug/L	C	U	UNFI	10.000	ug/L	C	U	UNFI	10.000	ug/L	D	U
3,3'-Dichlorobenzidine	UNFI	10.000	ug/L	C	U	UNFI	10.000	ug/L	C	U	UNFI	10.000	ug/L	D	U
3-Nitroaniline	UNFI	25.000	ug/L	C	U	UNFI	25.000	ug/L	C	U	UNFI	25.000	ug/L	D	U
4,6-Dinitro-2-methylphenol	UNFI	25.000	ug/L	C	R	UNFI	25.000	ug/L	C	U	UNFI	25.000	ug/L	D	U
4-Bromophenyl phenyl ether	UNFI	10.000	ug/L	C	U	UNFI	10.000	ug/L	C	U	UNFI	10.000	ug/L	D	U
4-Chloro-3-methylphenol	UNFI	10.000	ug/L	C	U	UNFI	10.000	ug/L	C	U	UNFI	10.000	ug/L	D	U
4-Chlorophenylphenyl ether	UNFI	10.000	ug/L	C	U	UNFI	10.000	ug/L	C	U	UNFI	10.000	ug/L	D	U
4-Methylphenol	UNFI	10.000	ug/L	C	U	UNFI	10.000	ug/L	C	U	UNFI	10.000	ug/L	D	U
4-Nitroaniline	UNFI	25.000	ug/L	C	U	UNFI	25.000	ug/L	C	U	UNFI	25.000	ug/L	D	U
4-Nitrophenol	UNFI	25.000	ug/L	C	UJ	UNFI	25.000	ug/L	C	UJ	UNFI	25.000	ug/L	D	U
Acenaphthene	UNFI	10.000	ug/L	C	U	UNFI	10.000	ug/L	C	U	UNFI	10.000	ug/L	D	U
Acenaphthylene	UNFI	10.000	ug/L	C	U	UNFI	10.000	ug/L	C	U	UNFI	10.000	ug/L	D	U
Anthracene	UNFI	10.000	ug/L	C	U	UNFI	10.000	ug/L	C	U	UNFI	10.000	ug/L	D	U
Benzo(a)anthracene	UNFI	10.000	ug/L	C	U	UNFI	10.000	ug/L	C	U	UNFI	10.000	ug/L	D	U
Benzo(a)pyrene	UNFI	10.000	ug/L	C	U	UNFI	10.000	ug/L	C	U	UNFI	10.000	ug/L	D	U
Benzo(b)fluoranthene	UNFI	10.000	ug/L	C	U	UNFI	10.000	ug/L	C	U	UNFI	10.000	ug/L	D	U
Benzo(g,h,i)perylene	UNFI	10.000	ug/L	C	U	UNFI	10.000	ug/L	C	U	UNFI	10.000	ug/L	D	U
Benzo(k)fluoranthene	UNFI	10.000	ug/L	C	U	UNFI	10.000	ug/L	C	U	UNFI	10.000	ug/L	D	U

TABLE C-12A
(Continued)

PHASE II - CHEMICAL PARAMETERS

BORING NUMBER	2037					2052					2947				
SAMPLE NUMBER	111540					111546					115473				
SAMPLING DATE	04/22/93					04/29/93					05/19/93				
CHEMICAL PARAMETERS	FLTD	RESULTS	UNITS	L	VQ	FLTD	RESULTS	UNITS	L	VQ	FLTD	RESULTS	UNITS	L	VQ
Semivolatile Organics															
Benzoic acid	UNFI	50.000	ug/L	C	R	UNFI	50.000	ug/L	C	UJ	UNFI	50.000	ug/L	D	UJ
Benzyl alcohol	UNFI	10.000	ug/L	C	UJ	UNFI	10.000	ug/L	C	U	UNFI	10.000	ug/L	D	R
Butyl benzyl phthalate	UNFI	10.000	ug/L	C	U	UNFI	10.000	ug/L	C	U	UNFI	10.000	ug/L	D	U
Carbazole	UNFI	10.000	ug/L	C	U	UNFI	10.000	ug/L	C	U	UNFI	10.000	ug/L	D	U
Chrysene	UNFI	10.000	ug/L	C	U	UNFI	10.000	ug/L	C	U	UNFI	10.000	ug/L	D	U
Di-n-butyl phthalate	UNFI	10.000	ug/L	C	U	UNFI	10.000	ug/L	C	U	UNFI	10.000	ug/L	D	U
Di-n-octyl phthalate	UNFI	10.000	ug/L	C	U	UNFI	10.000	ug/L	C	UJ	UNFI	10.000	ug/L	D	U
Dibenzo(a,h)anthracene	UNFI	10.000	ug/L	C	U	UNFI	10.000	ug/L	C	U	UNFI	10.000	ug/L	D	U
Dibenzofuran	UNFI	10.000	ug/L	C	U	UNFI	10.000	ug/L	C	U	UNFI	10.000	ug/L	D	U
Diethyl phthalate	UNFI	10.000	ug/L	C	U	UNFI	10.000	ug/L	C	U	UNFI	10.000	ug/L	D	U
Dimethyl phthalate	UNFI	10.000	ug/L	C	U	UNFI	10.000	ug/L	C	U	UNFI	10.000	ug/L	D	U
Fluoranthene	UNFI	10.000	ug/L	C	U	UNFI	10.000	ug/L	C	U	UNFI	10.000	ug/L	D	U
Fluorene	UNFI	10.000	ug/L	C	U	UNFI	10.000	ug/L	C	U	UNFI	10.000	ug/L	D	U
Hexachlorobenzene	UNFI	10.000	ug/L	C	U	UNFI	10.000	ug/L	C	U	UNFI	10.000	ug/L	D	U
Hexachlorobutadiene	UNFI	10.000	ug/L	C	U	UNFI	10.000	ug/L	C	U	UNFI	10.000	ug/L	D	U
Hexachlorocyclopentadiene	UNFI	10.000	ug/L	C	UJ	UNFI	10.000	ug/L	C	UJ	UNFI	10.000	ug/L	D	U
Hexachloroethane	UNFI	10.000	ug/L	C	U	UNFI	10.000	ug/L	C	U	UNFI	10.000	ug/L	D	U
Indeno(1,2,3-cd)pyrene	UNFI	10.000	ug/L	C	U	UNFI	10.000	ug/L	C	U	UNFI	10.000	ug/L	D	U
Isophorone	UNFI	10.000	ug/L	C	U	UNFI	10.000	ug/L	C	U	UNFI	10.000	ug/L	D	U
N-Nitroso-di-n-propylamine	UNFI	10.000	ug/L	C	U	UNFI	10.000	ug/L	C	U	UNFI	10.000	ug/L	D	U
N-Nitrosodimethylamine	UNFI	10.000	ug/L	C	U		NA				UNFI	10.000	ug/L	D	U
N-Nitrosodiphenylamine	UNFI	10.000	ug/L	C	U	UNFI	10.000	ug/L	C	U	UNFI	10.000	ug/L	D	U
Naphthalene	UNFI	10.000	ug/L	C	U	UNFI	10.000	ug/L	C	U	UNFI	10.000	ug/L	D	U
Nitrobenzene	UNFI	10.000	ug/L	C	U	UNFI	10.000	ug/L	C	U	UNFI	10.000	ug/L	D	U
Pentachlorophenol	UNFI	25.000	ug/L	C	U	UNFI	25.000	ug/L	C	U	UNFI	25.000	ug/L	D	U
Phenanthrene	UNFI	10.000	ug/L	C	U	UNFI	10.000	ug/L	C	U	UNFI	10.000	ug/L	D	U
Phenol	UNFI	10.000	ug/L	C	U	UNFI	10.000	ug/L	C	U	UNFI	10.000	ug/L	D	U
Pyrene	UNFI	10.000	ug/L	C	U	UNFI	10.000	ug/L	C	U	UNFI	10.000	ug/L	D	U
Tributyl phosphate	UNFI	10.000	ug/L	C	U		NA				UNFI	10.000	ug/L	D	U
bis(2-Chloroethoxy)methane	UNFI	10.000	ug/L	C	U	UNFI	10.000	ug/L	C	U	UNFI	10.000	ug/L	D	U
bis(2-Chloroethyl)ether	UNFI	10.000	ug/L	C	U	UNFI	10.000	ug/L	C	U	UNFI	10.000	ug/L	D	U
bis(2-Chloroisopropyl) ether	UNFI	10.000	ug/L	C	U	UNFI	10.000	ug/L	C	UJ	UNFI	10.000	ug/L	D	U
bis(2-Ethylhexyl) phthalate	UNFI	10.000	ug/L	C	U	UNFI	10.000	ug/L	C	U	UNFI	10.000	ug/L	D	U
p-Chloroaniline	UNFI	10.000	ug/L	C	U	UNFI	10.000	ug/L	C	U	UNFI	10.000	ug/L	D	U
Pesticide Organics/PCBs															
4,4'-DDD	UNFI	0.100	ug/L	C	U	UNFI	0.100	ug/L	C	U	UNFI	0.100	ug/L	D	U
4,4'-DDE	UNFI	0.100	ug/L	C	U	UNFI	0.100	ug/L	C	U	UNFI	0.100	ug/L	D	U
4,4'-DDT	UNFI	0.100	ug/L	C	UJ	UNFI	0.100	ug/L	C	U	UNFI	0.100	ug/L	D	U
Aldrin	UNFI	0.050	ug/L	C	U	UNFI	0.050	ug/L	C	U	UNFI	0.050	ug/L	D	U
Aroclor-1016	UNFI	1.000	ug/L	C	U	UNFI	1.000	ug/L	C	U	UNFI	1.000	ug/L	D	U

000370

TABLE C-12A
(Continued)

PHASE II - CHEMICAL PARAMETERS

BORING NUMBER	2037					2052					2947				
SAMPLE NUMBER	111540					111546					115473				
SAMPLING DATE	04/22/93					04/29/93					05/19/93				
CHEMICAL PARAMETERS	FLTD	RESULTS	UNITS	L	VQ	FLTD	RESULTS	UNITS	L	VQ	FLTD	RESULTS	UNITS	L	VQ
Pesticide Organics/PCBs															
Aroclor-1221	UNFI	2.000	ug/L	C	U	UNFI	2.000	ug/L	C	U	UNFI	2.000	ug/L	D	U
Aroclor-1232	UNFI	1.000	ug/L	C	U	UNFI	1.000	ug/L	C	U	UNFI	1.000	ug/L	D	U
Aroclor-1242	UNFI	1.000	ug/L	C	U	UNFI	1.000	ug/L	C	U	UNFI	1.000	ug/L	D	U
Aroclor-1248	UNFI	1.000	ug/L	C	U	UNFI	1.000	ug/L	C	U	UNFI	1.000	ug/L	D	U
Aroclor-1254	UNFI	1.000	ug/L	C	U	UNFI	1.000	ug/L	C	U	UNFI	1.000	ug/L	D	U
Aroclor-1260	UNFI	1.000	ug/L	C	U	UNFI	1.000	ug/L	C	U	UNFI	1.000	ug/L	D	U
Dieldrin	UNFI	0.100	ug/L	C	U	UNFI	0.100	ug/L	C	U	UNFI	0.100	ug/L	D	U
Endosulfan II	UNFI	0.100	ug/L	C	U	UNFI	0.100	ug/L	C	U	UNFI	0.100	ug/L	D	U
Endosulfan sulfate	UNFI	0.100	ug/L	C	U	UNFI	0.100	ug/L	C	U	UNFI	0.100	ug/L	D	U
Endosulfan-I	UNFI	0.050	ug/L	C	U	UNFI	0.050	ug/L	C	U	UNFI	0.050	ug/L	D	U
Endrin	UNFI	0.100	ug/L	C	U	UNFI	0.100	ug/L	C	U	UNFI	0.100	ug/L	D	U
Endrin aldehyde	UNFI	0.100	ug/L	C	U	UNFI	0.100	ug/L	C	U	UNFI	0.100	ug/L	D	U
Endrin ketone	UNFI	0.100	ug/L	C	U	UNFI	0.100	ug/L	C	U	UNFI	0.100	ug/L	D	U
Heptachlor	UNFI	0.050	ug/L	C	U	UNFI	0.050	ug/L	C	U	UNFI	0.050	ug/L	D	U
Heptachlor epoxide	UNFI	0.050	ug/L	C	U	UNFI	0.050	ug/L	C	U	UNFI	0.050	ug/L	D	U
Methoxychlor	UNFI	0.500	ug/L	C	U	UNFI	0.500	ug/L	C	U	UNFI	0.500	ug/L	D	U
Toxaphene	UNFI	5.000	ug/L	C	U	UNFI	5.000	ug/L	C	U	UNFI	5.000	ug/L	D	U
alpha-BHC	UNFI	0.050	ug/L	C	UJ	UNFI	0.050	ug/L	C	UJ	UNFI	0.050	ug/L	D	U
alpha-Chlordane	UNFI	0.050	ug/L	C	U	UNFI	0.050	ug/L	C	U	UNFI	0.050	ug/L	D	U
beta-BHC	UNFI	0.050	ug/L	C	U	UNFI	0.050	ug/L	C	U	UNFI	0.050	ug/L	D	U
delta-BHC	UNFI	0.050	ug/L	C	UJ	UNFI	0.050	ug/L	C	UJ	UNFI	0.050	ug/L	D	U
gamma-BHC (Lindane)	UNFI	0.050	ug/L	C	UJ	UNFI	0.050	ug/L	C	UJ	UNFI	0.050	ug/L	D	U
gamma-Chlordane	UNFI	0.050	ug/L	C	U	UNFI	0.050	ug/L	C	U	UNFI	0.050	ug/L	D	U
General Chemistry															
Alkalinity	UNFI	235.000	mg/L	B	J	UNFI	290.000	mg/kg	B	-	UNFI	295.000	mg/L	B	-
Ammonia	UNFI	0.150	mg/L	B	-	UNFI	0.320	mg/kg	B	-	UNFI	0.170	mg/L	B	-
Chloride	UNFI	39.250	mg/L	B	-	UNFI	23.620	mg/kg	B	-	UNFI	34.900	mg/L	B	-
Fluoride	UNFI	0.200	mg/L	B	-	UNFI	0.280	mg/kg	B	-	UNFI	0.150	mg/L	B	-
Nitrate	UNFI	0.100	mg/L	B	R	UNFI	0.100	mg/kg	B	R	UNFI	0.480	mg/L	B	R
Phenols	UNFI	0.010	mg/L	B	U	UNFI	0.010	mg/kg	B	U	UNFI	0.010	mg/L	B	U
Phosphorus	UNFI	0.020	mg/L	B	U	UNFI	0.040	mg/kg	B	-	UNFI	0.030	mg/L	B	-
Sulfate	UNFI	184.900	mg/L	B	-	UNFI	183.400	mg/kg	B	-	UNFI	137.600	mg/L	B	-
Sulfide	UNFI	0.500	mg/L	B	U	UNFI	0.500	mg/kg	B	U	UNFI	5.660	mg/L	B	J
Total Kjeldahl Nitrogen	UNFI	0.160	mg/L	B	-	UNFI	0.290	mg/kg	B	-		NA			
Total Organic Carbon	UNFI	3.200	mg/L	B	-	UNFI	1.180	mg/kg	B	-	UNFI	1.000	mg/L	B	U
Total Organic Halides	UNFI	0.010	mg/L	B	U	UNFI	10.000	mg/kg	B	U	UNFI	0.024	mg/L	B	-
Total Organic Nitrogen	UNFI	0.100	mg/L	B	U	UNFI	0.100	mg/kg	B	U	UNFI	0.220	mg/L	B	J

000371

6508

TABLE C-12A
(Continued)

PHASE II - CHEMICAL PARAMETERS

BORING NUMBER		2947					2947					2947			
SAMPLE NUMBER		115475					111572 DUPLICATE					111574 DUPLICATE			
SAMPLING DATE		05/19/93					05/19/93					05/19/93			
CHEMICAL PARAMETERS	FLTD	RESULTS	UNITS	L	VQ	FLTD	RESULTS	UNITS	L	VQ	FLTD	RESULTS	UNITS	L	VQ
Inorganics															
Aluminum	UNFI	0.327	mg/L	C	U	UNFI	0.273	mg/L	C	U	UNFI	0.308	mg/L	C	U
Antimony	UNFI	0.005	mg/L	C	U	UNFI	0.005	mg/L	C	U	UNFI	0.005	mg/L	C	U
Arsenic	UNFI	0.002	mg/L	C	U	UNFI	0.002	mg/L	C	U	UNFI	0.002	mg/L	C	U
Barium	UNFI	0.112	mg/L	C	-	UNFI	0.110	mg/L	C	-	UNFI	0.108	mg/L	C	-
Beryllium	UNFI	0.002	mg/L	C	U	UNFI	0.002	mg/L	C	U	UNFI	0.002	mg/L	C	U
Cadmium	UNFI	0.005	mg/L	C	U	UNFI	0.005	mg/L	C	U	UNFI	0.005	mg/L	C	U
Calcium	UNFI	163.000	mg/L	C	-	UNFI	160.000	mg/L	C	-	UNFI	158.000	mg/L	C	-
Chromium	UNFI	0.010	mg/L	C	U	UNFI	0.010	mg/L	C	U	UNFI	0.010	mg/L	C	U
Cobalt	UNFI	0.010	mg/L	C	U	UNFI	0.010	mg/L	C	U	UNFI	0.010	mg/L	C	U
Copper	UNFI	0.010	mg/L	C	U	UNFI	0.010	mg/L	C	U	UNFI	0.010	mg/L	C	U
Cyanide		NA				UNFI	0.002	mg/L	C	UJ		NA			
Iron	UNFI	4.970	mg/L	C	-	UNFI	4.730	mg/L	C	-	UNFI	4.740	mg/L	C	-
Lead	UNFI	0.002	mg/L	C	U	UNFI	0.002	mg/L	C	U	UNFI	0.002	mg/L	C	U
Magnesium	UNFI	31.900	mg/L	C	-	UNFI	31.100	mg/L	C	-	UNFI	30.900	mg/L	C	-
Manganese	UNFI	0.287	mg/L	C	-	UNFI	0.280	mg/L	C	-	UNFI	0.277	mg/L	C	-
Mercury	UNFI	0.000	mg/L	C	U	UNFI	0.000	mg/L	C	U	UNFI	0.000	mg/L	C	U
Molybdenum	UNFI	0.010	mg/L	C	U	UNFI	0.010	mg/L	C	U	UNFI	0.010	mg/L	C	U
Nickel	UNFI	0.020	mg/L	C	U	UNFI	0.020	mg/L	C	U	UNFI	0.020	mg/L	C	U
Potassium	UNFI	3.260	mg/L	C	-	UNFI	3.210	mg/L	C	-	UNFI	2.950	mg/L	C	-
Selenium	UNFI	0.002	mg/L	C	U	UNFI	0.002	mg/L	C	U	UNFI	0.002	mg/L	C	UJ
Silicon	UNFI	6.390	mg/L	C	-	UNFI	6.290	mg/L	C	-	UNFI	6.220	mg/L	C	-
Silver	UNFI	0.010	mg/L	C	U	UNFI	0.010	mg/L	C	U	UNFI	0.010	mg/L	C	U
Sodium	UNFI	14.100	mg/L	C	-	UNFI	14.000	mg/L	C	-	UNFI	13.800	mg/L	C	-
Thallium	UNFI	0.002	mg/L	C	UJ	UNFI	0.002	mg/L	C	UJ	UNFI	0.002	mg/L	C	UJ
Vanadium	UNFI	0.010	mg/L	C	U	UNFI	0.010	mg/L	C	U	UNFI	0.010	mg/L	C	U
Zinc	UNFI	0.005	mg/L	C	U	UNFI	0.005	mg/L	C	U	UNFI	0.005	mg/L	C	U
Volatile Organics															
1,1,1-Trichloroethane		NA				UNFI	10.000	ug/L	C	U		NA			
1,1,2,2-Tetrachloroethane		NA				UNFI	10.000	ug/L	C	U		NA			
1,1,2-Trichloroethane		NA				UNFI	10.000	ug/L	C	U		NA			
1,1-Dichloroethane		NA				UNFI	10.000	ug/L	C	U		NA			
1,1-Dichloroethene		NA				UNFI	10.000	ug/L	C	U		NA			
1,2-Dichloroethane		NA				UNFI	10.000	ug/L	C	U		NA			
1,2-Dichloroethene		NA				UNFI	10.000	ug/L	C	U		NA			
1,2-Dichloropropane		NA				UNFI	10.000	ug/L	C	U		NA			
2-Butanone		NA				UNFI	10.000	ug/L	C	UJ		NA			
2-Hexanone		NA				UNFI	10.000	ug/L	C	UJ		NA			
4-Methyl-2-pentanone		NA				UNFI	10.000	ug/L	C	UJ		NA			
Acetone		NA				UNFI	10.000	ug/L	C	U		NA			
Benzene		NA				UNFI	10.000	ug/L	C	U		NA			

000372

TABLE C-12A
(Continued)

PHASE II - CHEMICAL PARAMETERS

BORING NUMBER		2947				2947				2947			
SAMPLE NUMBER		115475				111572 DUPLICATE				111574 DUPLICATE			
SAMPLING DATE		05/19/93				05/19/93				05/19/93			
CHEMICAL PARAMETERS	FLTD	RESULTS	UNITS	L	VQ	FLTD	RESULTS	UNITS	L	VQ	FLTD	RESULTS	UNITS	L	VQ
Volatile Organics															
Bromodichloromethane		NA				UNFI	10.000	ug/L	C	U		NA			
Bromoform		NA				UNFI	10.000	ug/L	C	U		NA			
Bromomethane		NA				UNFI	10.000	ug/L	C	U		NA			
Carbon Tetrachloride		NA				UNFI	10.000	ug/L	C	U		NA			
Carbon disulfide		NA				UNFI	10.000	ug/L	C	U		NA			
Chlorobenzene		NA				UNFI	10.000	ug/L	C	U		NA			
Chloroethane		NA				UNFI	10.000	ug/L	C	U		NA			
Chloroform		NA				UNFI	10.000	ug/L	C	U		NA			
Chloromethane		NA				UNFI	10.000	ug/L	C	U		NA			
Dibromochloromethane		NA				UNFI	10.000	ug/L	C	U		NA			
Ethylbenzene		NA				UNFI	10.000	ug/L	C	U		NA			
Methylene chloride		NA				UNFI	10.000	ug/L	C	UJ		NA			
Styrene		NA				UNFI	10.000	ug/L	C	U		NA			
Tetrachloroethene		NA				UNFI	10.000	ug/L	C	U		NA			
Toluene		NA				UNFI	10.000	ug/L	C	U		NA			
Trichloroethene		NA				UNFI	10.000	ug/L	C	U		NA			
Vinyl Acetate		NA				UNFI	10.000	ug/L	C	UJ		NA			
Vinyl chloride		NA				UNFI	10.000	ug/L	C	U		NA			
Xylenes, Total		NA				UNFI	10.000	ug/L	C	U		NA			
cis-1,3-Dichloropropene		NA				UNFI	10.000	ug/L	C	U		NA			
trans-1,3-Dichloropropene		NA				UNFI	10.000	ug/L	C	U		NA			
Semivolatile Organics															
1,2,4-Trichlorobenzene		NA				UNFI	10.000	ug/L	C	U		NA			
1,2-Dichlorobenzene		NA				UNFI	10.000	ug/L	C	U		NA			
1,3-Dichlorobenzene		NA				UNFI	10.000	ug/L	C	U		NA			
1,4-Dichlorobenzene		NA				UNFI	10.000	ug/L	C	U		NA			
2,4,5-Trichlorophenol		NA				UNFI	25.000	ug/L	C	U		NA			
2,4,6-Trichlorophenol		NA				UNFI	10.000	ug/L	C	U		NA			
2,4-Dichlorophenol		NA				UNFI	10.000	ug/L	C	U		NA			
2,4-Dimethylphenol		NA				UNFI	10.000	ug/L	C	U		NA			
2,4-Dinitrophenol		NA				UNFI	25.000	ug/L	C	UJ		NA			
2,4-Dinitrotoluene		NA				UNFI	10.000	ug/L	C	U		NA			
2,6-Dinitrotoluene		NA				UNFI	10.000	ug/L	C	U		NA			
2-Benzyl-4-chlorophenol		NA				UNFI	10.000	ug/L	C	U		NA			
2-Chloronaphthalene		NA				UNFI	10.000	ug/L	C	U		NA			
2-Chlorophenol		NA				UNFI	10.000	ug/L	C	U		NA			
2-Methylnaphthalene		NA				UNFI	10.000	ug/L	C	U		NA			
2-Methylphenol		NA				UNFI	10.000	ug/L	C	U		NA			
2-Nitroaniline		NA				UNFI	25.000	ug/L	C	U		NA			
2-Nitrophenol		NA				UNFI	10.000	ug/L	C	U		NA			

TABLE C-12A
(Continued)

PHASE II - CHEMICAL PARAMETERS

BORING NUMBER		2947				2947				2947			
SAMPLE NUMBER		115475				111572				111574			
						DUPLICATE				DUPLICATE			
SAMPLING DATE		05/19/93				05/19/93				05/19/93			
CHEMICAL PARAMETERS	FLTD	RESULTS	UNITS	L	VQ	FLTD	RESULTS	UNITS	L	VQ	FLTD	RESULTS	UNITS	L	VQ
Semivolatile Organics															
3,3'-Dichlorobenzidine		NA				UNFI	10.000	ug/L	C	U		NA			
3-Nitroaniline		NA				UNFI	25.000	ug/L	C	U		NA			
4,6-Dinitro-2-methylphenol		NA				UNFI	25.000	ug/L	C	U		NA			
4-Bromophenyl phenyl ether		NA				UNFI	10.000	ug/L	C	U		NA			
4-Chloro-3-methylphenol		NA				UNFI	10.000	ug/L	C	U		NA			
4-Chlorophenylphenyl ether		NA				UNFI	10.000	ug/L	C	U		NA			
4-Methylphenol		NA				UNFI	10.000	ug/L	C	U		NA			
4-Nitroaniline		NA				UNFI	25.000	ug/L	C	U		NA			
4-Nitrophenol		NA				UNFI	25.000	ug/L	C	U		NA			
Acenaphthene		NA				UNFI	10.000	ug/L	C	U		NA			
Acenaphthylene		NA				UNFI	10.000	ug/L	C	U		NA			
Anthracene		NA				UNFI	10.000	ug/L	C	U		NA			
Benzo(a)anthracene		NA				UNFI	10.000	ug/L	C	U		NA			
Benzo(a)pyrene		NA				UNFI	10.000	ug/L	C	U		NA			
Benzo(b)fluoranthene		NA				UNFI	10.000	ug/L	C	U		NA			
Benzo(g,h,i)perylene		NA				UNFI	10.000	ug/L	C	U		NA			
Benzo(k)fluoranthene		NA				UNFI	10.000	ug/L	C	U		NA			
Benzoic acid		NA				UNFI	50.000	ug/L	C	UJ		NA			
Benzyl alcohol		NA				UNFI	10.000	ug/L	C	R		NA			
Butyl benzyl phthalate		NA				UNFI	10.000	ug/L	C	U		NA			
Carbazole		NA				UNFI	10.000	ug/L	C	U		NA			
Chrysene		NA				UNFI	10.000	ug/L	C	U		NA			
Di-n-butyl phthalate		NA				UNFI	10.000	ug/L	C	U		NA			
Di-n-octyl phthalate		NA				UNFI	10.000	ug/L	C	U		NA			
Dibenzo(a,h)anthracene		NA				UNFI	10.000	ug/L	C	U		NA			
Dibenzofuran		NA				UNFI	10.000	ug/L	C	U		NA			
Diethyl phthalate		NA				UNFI	10.000	ug/L	C	U		NA			
Dimethyl phthalate		NA				UNFI	10.000	ug/L	C	U		NA			
Fluoranthene		NA				UNFI	10.000	ug/L	C	U		NA			
Fluorene		NA				UNFI	10.000	ug/L	C	U		NA			
Hexachlorobenzene		NA				UNFI	10.000	ug/L	C	U		NA			
Hexachlorobutadiene		NA				UNFI	10.000	ug/L	C	U		NA			
Hexachlorocyclopentadiene		NA				UNFI	10.000	ug/L	C	U		NA			
Hexachloroethane		NA				UNFI	10.000	ug/L	C	U		NA			
Indeno(1,2,3-cd)pyrene		NA				UNFI	10.000	ug/L	C	U		NA			
Isophorone		NA				UNFI	10.000	ug/L	C	U		NA			
N-Nitroso-di-n-propylamine		NA				UNFI	10.000	ug/L	C	U		NA			
N-Nitrosodimethylamine		NA				UNFI	10.000	ug/L	C	U		NA			
N-Nitrosodiphenylamine		NA				UNFI	10.000	ug/L	C	U		NA			
Naphthalene		NA				UNFI	10.000	ug/L	C	U		NA			
Nitrobenzene		NA				UNFI	10.000	ug/L	C	U		NA			
Pentachlorophenol		NA				UNFI	25.000	ug/L	C	U		NA			

000374

TABLE C-12A
(Continued)

PHASE II - CHEMICAL PARAMETERS

BORING NUMBER		2947				2947				2947			
SAMPLE NUMBER		115475				111572 DUPLICATE				111574 DUPLICATE			
SAMPLING DATE		05/19/93				05/19/93				05/19/93			
CHEMICAL PARAMETERS	FLTD	RESULTS	UNITS	L	VQ	FLTD	RESULTS	UNITS	L	VQ	FLTD	RESULTS	UNITS	L	VQ
Semivolatile Organics															
Phenanthrene		NA				UNFI	10.000	ug/L	C	U		NA			
Phenol		NA				UNFI	10.000	ug/L	C	U		NA			
Pyrene		NA				UNFI	10.000	ug/L	C	U		NA			
Tributyl phosphate		NA				UNFI	10.000	ug/L	C	U		NA			
bis(2-Chloroethoxy)methane		NA				UNFI	10.000	ug/L	C	U		NA			
bis(2-Chloroethyl)ether		NA				UNFI	10.000	ug/L	C	U		NA			
bis(2-Chloroisopropyl) ether		NA				UNFI	10.000	ug/L	C	U		NA			
bis(2-Ethylhexyl) phthalate		NA				UNFI	10.000	ug/L	C	U		NA			
p-Chloroaniline		NA				UNFI	10.000	ug/L	C	U		NA			
Pesticide Organics/PCBs															
4,4'-DDD		NA				UNFI	0.100	ug/L	C	U		NA			
4,4'-DDE		NA				UNFI	0.100	ug/L	C	U		NA			
4,4'-DDT		NA				UNFI	0.100	ug/L	C	U		NA			
Aldrin		NA				UNFI	0.050	ug/L	C	U		NA			
Aroclor-1016		NA				UNFI	1.000	ug/L	C	U		NA			
Aroclor-1221		NA				UNFI	2.000	ug/L	C	U		NA			
Aroclor-1232		NA				UNFI	1.000	ug/L	C	U		NA			
Aroclor-1242		NA				UNFI	1.000	ug/L	C	U		NA			
Aroclor-1248		NA				UNFI	1.000	ug/L	C	U		NA			
Aroclor-1254		NA				UNFI	1.000	ug/L	C	U		NA			
Aroclor-1260		NA				UNFI	1.000	ug/L	C	U		NA			
Dieldrin		NA				UNFI	0.100	ug/L	C	U		NA			
Endosulfan II		NA				UNFI	0.100	ug/L	C	U		NA			
Endosulfan sulfate		NA				UNFI	0.100	ug/L	C	U		NA			
Endosulfan-I		NA				UNFI	0.050	ug/L	C	U		NA			
Endrin		NA				UNFI	0.100	ug/L	C	U		NA			
Endrin aldehyde		NA				UNFI	0.100	ug/L	C	U		NA			
Endrin ketone		NA				UNFI	0.100	ug/L	C	U		NA			
Heptachlor		NA				UNFI	0.050	ug/L	C	U		NA			
Heptachlor epoxide		NA				UNFI	0.050	ug/L	C	U		NA			
Methoxychlor		NA				UNFI	0.500	ug/L	C	U		NA			
Toxaphene		NA				UNFI	5.000	ug/L	C	U		NA			
alpha-BHC		NA				UNFI	0.050	ug/L	C	U		NA			
alpha-Chlordane		NA				UNFI	0.050	ug/L	C	U		NA			
beta-BHC		NA				UNFI	0.050	ug/L	C	U		NA			
delta-BHC		NA				UNFI	0.050	ug/L	C	U		NA			
gamma-BHC (Lindane)		NA				UNFI	0.050	ug/L	C	U		NA			
gamma-Chlordane		NA				UNFI	0.050	ug/L	C	U		NA			
General Chemistry															
Alkalinity		NA				UNFI	293.000	mg/L	B	-		NA			

TABLE C-12A
(Continued)

PHASE II - CHEMICAL PARAMETERS

BORING NUMBER		2947				2947				2947			
SAMPLE NUMBER		115475				111572 DUPLICATE				111574 DUPLICATE			
SAMPLING DATE		05/19/93				05/19/93				05/19/93			
CHEMICAL PARAMETERS	FLTD	RESULTS	UNITS	L	VQ	FLTD	RESULTS	UNITS	L	VQ	FLTD	RESULTS	UNITS	L	VQ
General Chemistry															
Ammonia		NA				UNFI	0.180	mg/L	B	-		NA			
Chloride		NA				UNFI	35.100	mg/L	B	-		NA			
Fluoride		NA				UNFI	0.180	mg/L	B	-		NA			
Nitrate		NA				UNFI	0.460	mg/L	B	R		NA			
Phenols		NA				UNFI	0.010	mg/L	B	U		NA			
Phosphorus		NA				UNFI	0.020	mg/L	B	U		NA			
Sulfate		NA				UNFI	135.300	mg/L	B	-		NA			
Sulfide		NA				UNFI	13.180	mg/L	B	J		NA			
Total Organic Carbon		NA				UNFI	1.000	mg/L	B	U		NA			
Total Organic Halides		NA				UNFI	0.023	mg/L	B	-		NA			
Total Organic Nitrogen		NA				UNFI	0.110	mg/L	B	J		NA			

TABLE C-12A
(Continued)

PHASE II - CHEMICAL PARAMETERS

BORING NUMBER		2949					2949					2951			
SAMPLE NUMBER		111489					115479					111536			
SAMPLING DATE		04/17/93					05/26/93					05/01/93			
CHEMICAL PARAMETERS	FLTD	RESULTS	UNITS	L	VQ	FLTD	RESULTS	UNITS	L	VQ	FLTD	RESULTS	UNITS	L	VQ
Inorganics															
Aluminum		NA				UNFI	0.313	mg/L	C	U	UNFI	0.069	mg/L	C	-
Aluminum	UNKN	0.220	mg/L	C	U		NA					NA			
Antimony		NA				UNFI	0.005	mg/L	C	U	UNFI	0.002	mg/L	C	UJ
Antimony	UNKN	0.003	mg/L	C	-		NA					NA			
Arsenic		NA				UNFI	0.002	mg/L	C	-	UNFI	0.001	mg/L	C	U
Arsenic	UNKN	0.002	mg/L	C	UJ		NA					NA			
Barium		NA				UNFI	0.090	mg/L	C	-	UNFI	0.090	mg/L	C	J
Barium	UNKN	0.094	mg/L	C	-		NA					NA			
Beryllium		NA				UNFI	0.002	mg/L	C	U	UNFI	0.003	mg/L	C	U
Beryllium	UNKN	0.002	mg/L	C	U		NA					NA			
Cadmium		NA				UNFI	0.005	mg/L	C	U	UNFI	0.002	mg/L	C	U
Cadmium	UNKN	0.005	mg/L	C	U		NA					NA			
Calcium		NA				UNFI	109.000	mg/L	C	-	UNFI	121.000	mg/L	C	-
Calcium	UNKN	111.000	mg/L	C	-		NA					NA			
Chromium		NA				UNFI	0.010	mg/L	C	U	UNFI	0.004	mg/L	C	U
Chromium	UNKN	0.010	mg/L	C	U		NA					NA			
Cobalt		NA				UNFI	0.010	mg/L	C	U	UNFI	0.003	mg/L	C	U
Cobalt	UNKN	0.010	mg/L	C	U		NA					NA			
Copper		NA				UNFI	0.010	mg/L	C	UJ	UNFI	0.002	mg/L	C	U
Copper	UNKN	0.010	mg/L	C	U		NA					NA			
Cyanide		NA					NA				UNFI	0.001	mg/L	C	U
Cyanide	UNKN	0.002	mg/L	C	U		NA					NA			
Iron		NA				UNFI	3.010	mg/L	C	-	UNFI	3.760	mg/L	C	-
Iron	UNKN	3.090	mg/L	C	-		NA					NA			
Lead		NA				UNFI	0.002	mg/L	C	U	UNFI	0.001	mg/L	C	U
Lead	UNKN	0.002	mg/L	C	U		NA					NA			
Magnesium		NA				UNFI	24.300	mg/L	C	-	UNFI	26.300	mg/L	C	-
Magnesium	UNKN	25.600	mg/L	C	-		NA					NA			
Manganese		NA				UNFI	0.202	mg/L	C	-	UNFI	0.315	mg/L	C	-
Manganese	UNKN	0.218	mg/L	C	-		NA					NA			
Mercury		NA				UNFI	0.000	mg/L	C	U	UNFI	0.000	mg/L	C	U
Mercury	UNKN	0.000	mg/L	C	U		NA					NA			
Molybdenum		NA				UNFI	0.010	mg/L	C	U	UNFI	0.004	mg/L	C	U
Molybdenum	UNKN	0.020	mg/L	C	U		NA					NA			
Nickel		NA				UNFI	0.020	mg/L	C	U	UNFI	0.003	mg/L	C	U
Nickel	UNKN	0.020	mg/L	C	U		NA					NA			
Potassium		NA				UNFI	1.600	mg/L	C	-	UNFI	2.440	mg/L	C	-
Potassium	UNKN	1.680	mg/L	C	-		NA					NA			
Selenium		NA				UNFI	0.002	mg/L	C	U	UNFI	0.001	mg/L	C	U
Selenium	UNKN	0.002	mg/L	C	U		NA					NA			
Silicon		NA				UNFI	6.190	mg/L	C	-	UNFI	6.480	mg/L	C	-
Silicon	UNKN	6.220	mg/L	C	-		NA					NA			

TABLE C-12A
(Continued)

PHASE II - CHEMICAL PARAMETERS

BORING NUMBER		2949					2949					2951			
SAMPLE NUMBER		111489					115479					111536			
SAMPLING DATE		04/17/93					05/26/93					05/01/93			
CHEMICAL PARAMETERS	FLTD	RESULTS	UNITS	L	VQ	FLTD	RESULTS	UNITS	L	VQ	FLTD	RESULTS	UNITS	L	VQ
Inorganics															
Silver		NA				UNFI	0.010	mg/L	C	U	UNFI	0.002	mg/L	C	U
Silver	UNKN	0.010	mg/L	C	U		NA					NA			
Sodium		NA				UNFI	11.500	mg/L	C	-	UNFI	12.900	mg/L	C	-
Sodium	UNKN	11.700	mg/L	C	-		NA					NA			
Thallium		NA				UNFI	0.002	mg/L	C	U	UNFI	0.001	mg/L	C	U
Thallium	UNKN	0.002	mg/L	C	U		NA					NA			
Vanadium		NA				UNFI	0.010	mg/L	C	U	UNFI	0.008	mg/L	C	U
Vanadium	UNKN	0.010	mg/L	C	U		NA					NA			
Zinc		NA				UNFI	0.012	mg/L	C	-	UNFI	0.004	mg/L	C	U
Zinc	UNKN	0.005	mg/L	C	U		NA					NA			
Volatile Organics															
1,1,1-Trichloroethane	UNFI	10.000	ug/L	C	U		NA				UNFI	10.000	ug/L	C	U
1,1,2,2-Tetrachloroethane	UNFI	10.000	ug/L	C	U		NA				UNFI	10.000	ug/L	C	U
1,1,2-Trichloroethane	UNFI	10.000	ug/L	C	U		NA				UNFI	10.000	ug/L	C	U
1,1-Dichloroethane	UNFI	10.000	ug/L	C	U		NA				UNFI	10.000	ug/L	C	U
1,1-Dichloroethene	UNFI	10.000	ug/L	C	U		NA				UNFI	10.000	ug/L	C	U
1,2-Dichloroethane	UNFI	10.000	ug/L	C	U		NA				UNFI	10.000	ug/L	C	U
1,2-Dichloroethene	UNFI	10.000	ug/L	C	U		NA				UNFI	10.000	ug/L	C	U
1,2-Dichloropropane	UNFI	10.000	ug/L	C	U		NA				UNFI	10.000	ug/L	C	U
2-Butanone	UNFI	10.000	ug/L	C	U		NA				UNFI	10.000	ug/L	C	U
2-Hexanone	UNFI	10.000	ug/L	C	U		NA				UNFI	10.000	ug/L	C	UJ
4-Methyl-2-pentanone	UNFI	10.000	ug/L	C	U		NA				UNFI	10.000	ug/L	C	U
Acetone	UNFI	10.000	ug/L	C	U		NA				UNFI	10.000	ug/L	C	U
Benzene	UNFI	10.000	ug/L	C	U		NA				UNFI	10.000	ug/L	C	U
Bromodichloromethane	UNFI	10.000	ug/L	C	U		NA				UNFI	10.000	ug/L	C	U
Bromoform	UNFI	10.000	ug/L	C	U		NA				UNFI	10.000	ug/L	C	U
Bromomethane	UNFI	10.000	ug/L	C	U		NA				UNFI	10.000	ug/L	C	U
Carbon Tetrachloride	UNFI	10.000	ug/L	C	U		NA				UNFI	10.000	ug/L	C	U
Carbon disulfide	UNFI	10.000	ug/L	C	U		NA				UNFI	10.000	ug/L	C	UJ
Chlorobenzene	UNFI	10.000	ug/L	C	U		NA				UNFI	10.000	ug/L	C	U
Chloroethane	UNFI	10.000	ug/L	C	U		NA				UNFI	10.000	ug/L	C	UJ
Chloroform	UNFI	10.000	ug/L	C	U		NA				UNFI	10.000	ug/L	C	U
Chloromethane	UNFI	10.000	ug/L	C	U		NA				UNFI	10.000	ug/L	C	UJ
Dibromochloromethane	UNFI	10.000	ug/L	C	U		NA				UNFI	10.000	ug/L	C	U
Ethylbenzene	UNFI	10.000	ug/L	C	U		NA				UNFI	10.000	ug/L	C	U
Methylene chloride	UNFI	100.000	ug/L	C	UJ		NA				UNFI	10.000	ug/L	C	UJ
Styrene	UNFI	10.000	ug/L	C	U		NA				UNFI	10.000	ug/L	C	U
Tetrachloroethene	UNFI	10.000	ug/L	C	U		NA				UNFI	10.000	ug/L	C	U
Toluene	UNFI	10.000	ug/L	C	U		NA				UNFI	10.000	ug/L	C	U
Trichloroethene	UNFI	10.000	ug/L	C	U		NA				UNFI	10.000	ug/L	C	U

TABLE C-12A
(Continued)

PHASE II - CHEMICAL PARAMETERS

BORING NUMBER		2949					2949					2951			
SAMPLE NUMBER		111489					115479					111536			
SAMPLING DATE		04/17/93					05/26/93					05/01/93			
CHEMICAL PARAMETERS	FLTD	RESULTS	UNITS	L	VQ	FLTD	RESULTS	UNITS	L	VQ	FLTD	RESULTS	UNITS	L	VQ
Volatile Organics															
Vinyl Acetate	UNFI	10.000	ug/L	C	U		NA				UNFI	10.000	ug/L	C	U
Vinyl chloride	UNFI	10.000	ug/L	C	U		NA				UNFI	10.000	ug/L	C	U
Xylenes, Total	UNFI	10.000	ug/L	C	U		NA				UNFI	10.000	ug/L	C	U
cis-1,3-Dichloropropene	UNFI	10.000	ug/L	C	U		NA				UNFI	10.000	ug/L	C	U
trans-1,3-Dichloropropene	UNFI	10.000	ug/L	C	U		NA				UNFI	10.000	ug/L	C	U
Semivolatile Organics															
1,2,4-Trichlorobenzene	UNFI	10.000	ug/L	C	UJ		NA				UNFI	10.000	ug/L	C	U
1,2-Dichlorobenzene	UNFI	10.000	ug/L	C	U		NA				UNFI	10.000	ug/L	C	U
1,3-Dichlorobenzene	UNFI	10.000	ug/L	C	U		NA				UNFI	10.000	ug/L	C	U
1,4-Dichlorobenzene	UNFI	10.000	ug/L	C	U		NA				UNFI	10.000	ug/L	C	U
2,4,5-Trichlorophenol	UNFI	25.000	ug/L	C	U		NA				UNFI	25.000	ug/L	C	U
2,4,6-Trichlorophenol	UNFI	10.000	ug/L	C	U		NA				UNFI	10.000	ug/L	C	U
2,4-Dichlorophenol	UNFI	10.000	ug/L	C	U		NA				UNFI	10.000	ug/L	C	U
2,4-Dimethylphenol	UNFI	10.000	ug/L	C	U		NA				UNFI	10.000	ug/L	C	U
2,4-Dinitrophenol	UNFI	25.000	ug/L	C	U		NA				UNFI	25.000	ug/L	C	R
2,4-Dinitrotoluene	UNFI	10.000	ug/L	C	U		NA				UNFI	10.000	ug/L	C	U
2,6-Dinitrotoluene	UNFI	10.000	ug/L	C	U		NA				UNFI	10.000	ug/L	C	U
2-Chloronaphthalene	UNFI	10.000	ug/L	C	U		NA				UNFI	10.000	ug/L	C	U
2-Chlorophenol	UNFI	10.000	ug/L	C	U		NA				UNFI	10.000	ug/L	C	U
2-Methylnaphthalene	UNFI	10.000	ug/L	C	U		NA				UNFI	10.000	ug/L	C	U
2-Methylphenol	UNFI	10.000	ug/L	C	U		NA				UNFI	10.000	ug/L	C	U
2-Nitroaniline	UNFI	25.000	ug/L	C	UJ		NA				UNFI	25.000	ug/L	C	U
2-Nitrophenol	UNFI	10.000	ug/L	C	U		NA				UNFI	10.000	ug/L	C	U
3,3'-Dichlorobenzidine	UNFI	10.000	ug/L	C	UJ		NA				UNFI	10.000	ug/L	C	U
3-Nitroaniline	UNFI	25.000	ug/L	C	UJ		NA				UNFI	25.000	ug/L	C	U
4,6-Dinitro-2-methylphenol	UNFI	25.000	ug/L	C	U		NA				UNFI	25.000	ug/L	C	R
4-Bromophenyl phenyl ether	UNFI	10.000	ug/L	C	U		NA				UNFI	10.000	ug/L	C	U
4-Chloro-3-methylphenol	UNFI	10.000	ug/L	C	U		NA				UNFI	10.000	ug/L	C	U
4-Chlorophenylphenyl ether	UNFI	10.000	ug/L	C	U		NA				UNFI	10.000	ug/L	C	U
4-Methylphenol	UNFI	10.000	ug/L	C	UJ		NA				UNFI	10.000	ug/L	C	U
4-Nitroaniline	UNFI	25.000	ug/L	C	UJ		NA				UNFI	25.000	ug/L	C	U
4-Nitrophenol	UNFI	25.000	ug/L	C	UJ		NA				UNFI	25.000	ug/L	C	R
Acenaphthene	UNFI	10.000	ug/L	C	U		NA				UNFI	10.000	ug/L	C	U
Acenaphthylene	UNFI	10.000	ug/L	C	U		NA				UNFI	10.000	ug/L	C	U
Anthracene	UNFI	10.000	ug/L	C	U		NA				UNFI	10.000	ug/L	C	U
Benzo(a)anthracene	UNFI	10.000	ug/L	C	U		NA				UNFI	10.000	ug/L	C	U
Benzo(a)pyrene	UNFI	10.000	ug/L	C	U		NA				UNFI	10.000	ug/L	C	U
Benzo(b)fluoranthene	UNFI	10.000	ug/L	C	U		NA				UNFI	10.000	ug/L	C	U
Benzo(g,h,i)perylene	UNFI	10.000	ug/L	C	U		NA				UNFI	10.000	ug/L	C	U
Benzo(k)fluoranthene	UNFI	10.000	ug/L	C	UJ		NA				UNFI	10.000	ug/L	C	U

TABLE C-12A
(Continued)

PHASE II - CHEMICAL PARAMETERS

BORING NUMBER		2949					2949					2951			
SAMPLE NUMBER		111489					115479					111536			
SAMPLING DATE		04/17/93					05/26/93					05/01/93			
CHEMICAL PARAMETERS	FLTD	RESULTS	UNITS	L	VQ	FLTD	RESULTS	UNITS	L	VQ	FLTD	RESULTS	UNITS	L	VQ
Semivolatile Organics															
Benzoic acid	UNFI	50.000	ug/L	C	U		NA				UNFI	50.000	ug/L	C	R
Benzyl alcohol	UNFI	10.000	ug/L	C	U		NA				UNFI	10.000	ug/L	C	UJ
Butyl benzyl phthalate	UNFI	1.000	ug/L	C	J		NA				UNFI	10.000	ug/L	C	UJ
Carbazole	UNFI	10.000	ug/L	C	U		NA				UNFI	10.000	ug/L	C	U
Chrysene	UNFI	10.000	ug/L	C	U		NA				UNFI	10.000	ug/L	C	U
Di-n-butyl phthalate	UNFI	10.000	ug/L	C	U		NA				UNFI	10.000	ug/L	C	U
Di-n-octyl phthalate	UNFI	10.000	ug/L	C	U		NA				UNFI	10.000	ug/L	C	R
Dibenzo(a,h)anthracene	UNFI	10.000	ug/L	C	U		NA				UNFI	10.000	ug/L	C	UJ
Dibenzofuran	UNFI	10.000	ug/L	C	U		NA				UNFI	10.000	ug/L	C	U
Diethyl phthalate	UNFI	10.000	ug/L	C	U		NA				UNFI	10.000	ug/L	C	U
Dimethyl phthalate	UNFI	10.000	ug/L	C	U		NA				UNFI	10.000	ug/L	C	U
Fluoranthene	UNFI	10.000	ug/L	C	U		NA				UNFI	10.000	ug/L	C	U
Fluorene	UNFI	10.000	ug/L	C	U		NA				UNFI	10.000	ug/L	C	U
Hexachlorobenzene	UNFI	10.000	ug/L	C	U		NA				UNFI	10.000	ug/L	C	UJ
Hexachlorobutadiene	UNFI	10.000	ug/L	C	R		NA				UNFI	10.000	ug/L	C	U
Hexachlorocyclopentadiene	UNFI	10.000	ug/L	C	U		NA				UNFI	10.000	ug/L	C	UJ
Hexachloroethane	UNFI	10.000	ug/L	C	U		NA				UNFI	10.000	ug/L	C	U
Indeno(1,2,3-cd)pyrene	UNFI	10.000	ug/L	C	U		NA				UNFI	10.000	ug/L	C	UJ
Isophorone	UNFI	10.000	ug/L	C	U		NA				UNFI	10.000	ug/L	C	U
N-Nitroso-di-n-propylamine	UNFI	10.000	ug/L	C	U		NA				UNFI	10.000	ug/L	C	U
N-Nitrosodiphenylamine	UNFI	10.000	ug/L	C	U		NA				UNFI	10.000	ug/L	C	U
Naphthalene	UNFI	10.000	ug/L	C	U		NA				UNFI	10.000	ug/L	C	U
Nitrobenzene	UNFI	10.000	ug/L	C	U		NA				UNFI	10.000	ug/L	C	U
Pentachlorophenol	UNFI	25.000	ug/L	C	U		NA				UNFI	25.000	ug/L	C	UJ
Phenanthrene	UNFI	10.000	ug/L	C	U		NA				UNFI	10.000	ug/L	C	U
Phenol	UNFI	10.000	ug/L	C	U		NA				UNFI	10.000	ug/L	C	U
Pyrene	UNFI	10.000	ug/L	C	U		NA				UNFI	10.000	ug/L	C	U
bis(2-Chloroethoxy)methane	UNFI	10.000	ug/L	C	U		NA				UNFI	10.000	ug/L	C	U
bis(2-Chloroethyl)ether	UNFI	10.000	ug/L	C	U		NA				UNFI	10.000	ug/L	C	U
bis(2-Chloroisopropyl) ether	UNFI	10.000	ug/L	C	UJ		NA				UNFI	10.000	ug/L	C	U
bis(2-Ethylhexyl) phthalate	UNFI	10.000	ug/L	C	U		NA				UNFI	10.000	ug/L	C	UJ
p-Chloroaniline	UNFI	10.000	ug/L	C	UJ		NA				UNFI	10.000	ug/L	C	U
Pesticide Organics/PCBs															
4,4'-DDD	UNFI	0.100	ug/L	C	UJ		NA				UNFI	0.100	ug/L	C	U
4,4'-DDE	UNFI	0.100	ug/L	C	U		NA				UNFI	0.100	ug/L	C	U
4,4'-DDT	UNFI	0.100	ug/L	C	U		NA				UNFI	0.100	ug/L	C	U
Aldrin	UNFI	0.050	ug/L	C	U		NA				UNFI	0.050	ug/L	C	U
Aroclor-1016	UNFI	1.000	ug/L	C	U		NA				UNFI	1.000	ug/L	C	U
Aroclor-1221	UNFI	2.000	ug/L	C	U		NA				UNFI	2.000	ug/L	C	U
Aroclor-1232	UNFI	1.000	ug/L	C	U		NA				UNFI	1.000	ug/L	C	U

000380

TABLE C-12A
(Continued)

PHASE II - CHEMICAL PARAMETERS

BORING NUMBER		2949					2949					2951			
SAMPLE NUMBER		111489					115479					111536			
SAMPLING DATE		04/17/93					05/26/93					05/01/93			
CHEMICAL PARAMETERS	FLTD	RESULTS	UNITS	L	VQ	FLTD	RESULTS	UNITS	L	VQ	FLTD	RESULTS	UNITS	L	VQ
Pesticide Organics/PCBs															
Aroclor-1242	UNFI	1.000	ug/L	C	U		NA				UNFI	1.000	ug/L	C	U
Aroclor-1248	UNFI	1.000	ug/L	C	U		NA				UNFI	1.000	ug/L	C	U
Aroclor-1254	UNFI	1.000	ug/L	C	U		NA				UNFI	1.000	ug/L	C	U
Aroclor-1260	UNFI	1.000	ug/L	C	U		NA				UNFI	1.000	ug/L	C	U
Dieldrin	UNFI	0.100	ug/L	C	U		NA				UNFI	0.100	ug/L	C	U
Endosulfan II	UNFI	0.100	ug/L	C	U		NA				UNFI	0.100	ug/L	C	U
Endosulfan sulfate	UNFI	0.100	ug/L	C	U		NA				UNFI	0.100	ug/L	C	U
Endosulfan-I	UNFI	0.050	ug/L	C	U		NA				UNFI	0.050	ug/L	C	U
Endrin	UNFI	0.100	ug/L	C	U		NA				UNFI	0.100	ug/L	C	U
Endrin aldehyde	UNFI	0.100	ug/L	C	U		NA				UNFI	0.100	ug/L	C	U
Endrin ketone	UNFI	0.100	ug/L	C	U		NA				UNFI	0.100	ug/L	C	U
Heptachlor	UNFI	0.050	ug/L	C	U		NA				UNFI	0.050	ug/L	C	U
Heptachlor epoxide	UNFI	0.050	ug/L	C	U		NA				UNFI	0.050	ug/L	C	U
Methoxychlor	UNFI	0.500	ug/L	C	U		NA				UNFI	0.500	ug/L	C	U
Toxaphene	UNFI	5.000	ug/L	C	U		NA				UNFI	5.000	ug/L	C	U
alpha-BHC	UNFI	0.050	ug/L	C	U		NA				UNFI	0.050	ug/L	C	UJ
alpha-Chlordane	UNFI	0.050	ug/L	C	U		NA				UNFI	0.050	ug/L	C	U
beta-BHC	UNFI	0.050	ug/L	C	U		NA				UNFI	0.050	ug/L	C	U
delta-BHC	UNFI	0.050	ug/L	C	U		NA				UNFI	0.050	ug/L	C	UJ
gamma-BHC (Lindane)	UNFI	0.050	ug/L	C	U		NA				UNFI	0.050	ug/L	C	UJ
gamma-Chlordane	UNFI	0.050	ug/L	C	U		NA				UNFI	0.050	ug/L	C	U
General Chemistry															
Alkalinity	UNFI	271.000	mg/kg	B	-		NA				UNFI	260.000	mg/L	B	-
Ammonia	UNFI	0.240	mg/kg	B	-		NA				UNFI	0.100	mg/L	B	U
Chloride	UNFI	27.740	mg/kg	B	-		NA				UNFI	30.870	mg/L	B	-
Fluoride	UNFI	0.260	mg/kg	B	-		NA				UNFI	0.220	mg/L	B	-
Nitrate	UNFI	0.100	mg/kg	B	R		NA				UNFI	0.100	mg/L	B	R
Phenols	UNFI	0.010	mg/kg	B	U		NA				UNFI	0.010	mg/L	B	U
Phosphorus	UNFI	0.020	mg/kg	B	U		NA					NA			
Sulfate	UNFI	109.500	mg/kg	B	-		NA				UNFI	128.400	mg/L	B	-
Sulfide	UNFI	0.500	mg/kg	B	U		NA				UNFI	0.500	mg/L	B	U
Total Kjeldahl Nitrogen	UNFI	0.350	mg/kg	B	-		NA				UNFI	0.220	mg/L	B	-
Total Organic Carbon	UNFI	1.000	mg/kg	B	U		NA				UNFI	1.000	mg/L	B	U
Total Organic Halides	UNFI	10.000	mg/kg	B	U		NA				UNFI	0.010	mg/L	B	-
Total Organic Nitrogen	UNFI	0.102	mg/kg	B	-		NA				UNFI	0.220	mg/L	B	-
Total Phosphorous		NA					NA				UNFI	0.100	mg/L	B	-

TABLE C-12A
(Continued)

PHASE II - CHEMICAL PARAMETERS

BORING NUMBER	2951				2953			
SAMPLE NUMBER	115478				115488			
SAMPLING DATE	05/25/93				06/23/93			
CHEMICAL PARAMETERS	FLTD	RESULTS	UNITS	L VQ	FLTD	RESULTS	UNITS	L VQ
Inorganics								
Aluminum		NA			FILT	0.243	mg/L	C -
Aluminum	UNFI	1.230	mg/L	C -	UNFI	0.672	mg/L	C -
Antimony		NA			FILT	0.005	mg/L	C U
Antimony	UNFI	0.005	mg/L	C U	UNFI	0.005	mg/L	C U
Arsenic		NA			FILT	0.002	mg/L	C U
Arsenic	UNFI	0.002	mg/L	C -	UNFI	0.002	mg/L	C U
Barium		NA			FILT	0.096	mg/L	C -
Barium	UNFI	0.094	mg/L	C -	UNFI	0.091	mg/L	C -
Beryllium		NA			FILT	0.002	mg/L	C U
Beryllium	UNFI	0.002	mg/L	C U	UNFI	0.002	mg/L	C U
Cadmium		NA			FILT	0.005	mg/L	C U
Cadmium	UNFI	0.005	mg/L	C U	UNFI	0.005	mg/L	C U
Calcium		NA			FILT	167.000	mg/L	C -
Calcium	UNFI	142.000	mg/L	C -	UNFI	161.000	mg/L	C -
Chromium		NA			FILT	0.010	mg/L	C U
Chromium	UNFI	0.020	mg/L	C -	UNFI	0.010	mg/L	C U
Cobalt		NA			FILT	0.010	mg/L	C U
Cobalt	UNFI	0.010	mg/L	C U	UNFI	0.010	mg/L	C U
Copper		NA			FILT	0.010	mg/L	C U
Copper	UNFI	0.010	mg/L	C U	UNFI	0.010	mg/L	C U
Cyanide		NA			UNFI	0.002	mg/L	C U
Iron		NA			FILT	5.640	mg/L	C -
Iron	UNFI	7.230	mg/L	C -	UNFI	6.710	mg/L	C -
Lead		NA			FILT	0.002	mg/L	C U
Lead	UNFI	0.004	mg/L	C -	UNFI	0.003	mg/L	C J
Magnesium		NA			FILT	32.600	mg/L	C -
Magnesium	UNFI	28.900	mg/L	C -	UNFI	31.700	mg/L	C -
Manganese		NA			FILT	0.381	mg/L	C -
Manganese	UNFI	0.324	mg/L	C -	UNFI	0.370	mg/L	C -
Mercury		NA			FILT	0.000	mg/L	C U
Mercury	UNFI	0.000	mg/L	C U	UNFI	0.000	mg/L	C U
Molybdenum		NA			FILT	0.010	mg/L	C U
Molybdenum	UNFI	0.010	mg/L	C U	UNFI	0.010	mg/L	C U
Nickel		NA			FILT	0.020	mg/L	C U
Nickel	UNFI	0.020	mg/L	C U	UNFI	0.020	mg/L	C U
Potassium		NA			FILT	2.800	mg/L	C -
Potassium	UNFI	2.700	mg/L	C -	UNFI	2.760	mg/L	C -
Selenium		NA			FILT	0.002	mg/L	C UJ
Selenium	UNFI	0.002	mg/L	C UJ	UNFI	0.002	mg/L	C UJ
Silicon		NA			FILT	6.620	mg/L	C -
Silicon	UNFI	8.100	mg/L	C -	UNFI	6.600	mg/L	C -
Silver		NA			FILT	0.010	mg/L	C U

000382

TABLE C-12A
(Continued)

PHASE II - CHEMICAL PARAMETERS

BORING NUMBER		2951					2953				
SAMPLE NUMBER		115478					115488				
SAMPLING DATE		05/25/93					06/23/93				
CHEMICAL PARAMETERS	FLTD	RESULTS	UNITS	L	VQ		FLTD	RESULTS	UNITS	L	VQ
Inorganics											
Silver	UNFI	0.010	mg/L	C	U		UNFI	0.010	mg/L	C	U
Sodium		NA					FILT	18.200	mg/L	C	-
Sodium	UNFI	12.800	mg/L	C	-		UNFI	17.500	mg/L	C	-
Thallium		NA					FILT	0.002	mg/L	C	U
Thallium	UNFI	0.002	mg/L	C	UJ		UNFI	0.002	mg/L	C	U
Vanadium		NA					FILT	0.010	mg/L	C	U
Vanadium	UNFI	0.010	mg/L	C	U		UNFI	0.010	mg/L	C	U
Zinc		NA					FILT	0.007	mg/L	C	-
Zinc	UNFI	0.016	mg/L	C	-		UNFI	0.058	mg/L	C	-
Volatile Organics											
1,1,1-Trichloroethane		NA					UNFI	10.000	ug/L	C	U
1,1,2,2-Tetrachloroethane		NA					UNFI	10.000	ug/L	C	U
1,1,2-Trichloroethane		NA					UNFI	10.000	ug/L	C	U
1,1-Dichloroethane		NA					UNFI	10.000	ug/L	C	U
1,1-Dichloroethene		NA					UNFI	10.000	ug/L	C	U
1,2-Dichloroethane		NA					UNFI	10.000	ug/L	C	U
1,2-Dichloroethene		NA					UNFI	10.000	ug/L	C	U
1,2-Dichloropropane		NA					UNFI	10.000	ug/L	C	U
2-Butanone		NA					UNFI	10.000	ug/L	C	U
2-Hexanone		NA					UNFI	10.000	ug/L	C	U
4-Methyl-2-pentanone		NA					UNFI	10.000	ug/L	C	U
Acetone		NA					UNFI	10.000	ug/L	C	U
Benzene		NA					UNFI	10.000	ug/L	C	U
Bromodichloromethane		NA					UNFI	10.000	ug/L	C	U
Bromoform		NA					UNFI	10.000	ug/L	C	U
Bromomethane		NA					UNFI	10.000	ug/L	C	U
Carbon Tetrachloride		NA					UNFI	10.000	ug/L	C	U
Carbon disulfide		NA					UNFI	10.000	ug/L	C	U
Chlorobenzene		NA					UNFI	10.000	ug/L	C	U
Chloroethane		NA					UNFI	10.000	ug/L	C	U
Chloroform		NA					UNFI	10.000	ug/L	C	U
Chloromethane		NA					UNFI	10.000	ug/L	C	U
Dibromochloromethane		NA					UNFI	10.000	ug/L	C	U
Ethylbenzene		NA					UNFI	10.000	ug/L	C	U
Methylene chloride		NA					UNFI	10.000	ug/L	C	UJ
Styrene		NA					UNFI	10.000	ug/L	C	U
Tetrachloroethene		NA					UNFI	10.000	ug/L	C	U
Toluene		NA					UNFI	10.000	ug/L	C	U
Trichloroethene		NA					UNFI	10.000	ug/L	C	U
Vinyl chloride		NA					UNFI	10.000	ug/L	C	U

TABLE C-12A
(Continued)

PHASE II - CHEMICAL PARAMETERS

BORING NUMBER		2951				2953			
SAMPLE NUMBER		115478				115488			
SAMPLING DATE		05/25/93				06/23/93			
CHEMICAL PARAMETERS	FLTD	RESULTS	UNITS	L	VQ	FLTD	RESULTS	UNITS	L	VQ
Volatile Organics										
Xylenes, Total		NA				UNFI	10.000	ug/L	C	U
cis-1,3-Dichloropropene		NA				UNFI	10.000	ug/L	C	U
trans-1,3-Dichloropropene		NA				UNFI	10.000	ug/L	C	U
Semivolatile Organics										
1,2-Dichlorobenzene		NA				UNFI	10.000	ug/L	C	U
1,3-Dichlorobenzene		NA				UNFI	10.000	ug/L	C	U
1,4-Dichlorobenzene		NA				UNFI	10.000	ug/L	C	U
2,4,5-Trichlorophenol		NA				UNFI	25.000	ug/L	C	U
2,4,6-Trichlorophenol		NA				UNFI	10.000	ug/L	C	U
2,4-Dimethylphenol		NA				UNFI	10.000	ug/L	C	U
2,4-Dinitrophenol		NA				UNFI	50.000	ug/L	C	U
2,6-Dinitrotoluene		NA				UNFI	10.000	ug/L	C	U
2-Benzyl-4-chlorophenol		NA				UNFI	10.000	ug/L	C	U
2-Chloronaphthalene		NA				UNFI	10.000	ug/L	C	U
2-Chlorophenol		NA				UNFI	10.000	ug/L	C	U
2-Methylnaphthalene		NA				UNFI	10.000	ug/L	C	U
2-Methylphenol		NA				UNFI	10.000	ug/L	C	U
2-Nitroaniline		NA				UNFI	25.000	ug/L	C	U
2-Nitrophenol		NA				UNFI	10.000	ug/L	C	U
3,3'-Dichlorobenzidine		NA				UNFI	10.000	ug/L	C	U
3-Nitroaniline		NA				UNFI	25.000	ug/L	C	U
4,6-Dinitro-2-methylphenol		NA				UNFI	25.000	ug/L	C	U
4-Bromophenyl phenyl ether		NA				UNFI	10.000	ug/L	C	U
4-Chloro-3-methylphenol		NA				UNFI	10.000	ug/L	C	U
4-Chlorophenylphenyl ether		NA				UNFI	10.000	ug/L	C	U
4-Methylphenol		NA				UNFI	10.000	ug/L	C	U
4-Nitroaniline		NA				UNFI	25.000	ug/L	C	U
4-Nitrophenol		NA				UNFI	25.000	ug/L	C	U
Acenaphthene		NA				UNFI	10.000	ug/L	C	U
Acenaphthylene		NA				UNFI	10.000	ug/L	C	U
Anthracene		NA				UNFI	10.000	ug/L	C	U
Benzo(a)anthracene		NA				UNFI	10.000	ug/L	C	U
Benzo(a)pyrene		NA				UNFI	10.000	ug/L	C	U
Benzo(b)fluoranthene		NA				UNFI	10.000	ug/L	C	U
Benzo(g,h,i)perylene		NA				UNFI	10.000	ug/L	C	U
Benzo(k)fluoranthene		NA				UNFI	10.000	ug/L	C	U
Benzoic acid		NA				UNFI	50.000	ug/L	C	U
Benzyl alcohol		NA				UNFI	10.000	ug/L	C	U
Butyl benzyl phthalate		NA				UNFI	1.000	ug/L	C	J
Carbazole		NA				UNFI	10.000	ug/L	C	U

000384

TABLE C-12A
(Continued)

PHASE II - CHEMICAL PARAMETERS

BORING NUMBER		2951				2953			
SAMPLE NUMBER		115478				115488			
SAMPLING DATE		05/25/93				06/23/93			
CHEMICAL PARAMETERS	FLTD	RESULTS	UNITS	L	VQ	FLTD	RESULTS	UNITS	L	VQ
Semivolatile Organics										
Chrysene		NA				UNFI	10.000	ug/L	C	U
Di-n-butyl phthalate		NA				UNFI	10.000	ug/L	C	U
Di-n-octyl phthalate		NA				UNFI	10.000	ug/L	C	U
Dibenzo(a,h)anthracene		NA				UNFI	10.000	ug/L	C	U
Dibenzofuran		NA				UNFI	10.000	ug/L	C	U
Diethyl phthalate		NA				UNFI	10.000	ug/L	C	U
Dimethyl phthalate		NA				UNFI	10.000	ug/L	C	U
Fluoranthene		NA				UNFI	10.000	ug/L	C	U
Fluorene		NA				UNFI	10.000	ug/L	C	U
Hexachlorobenzene		NA				UNFI	10.000	ug/L	C	U
Hexachlorobutadiene		NA				UNFI	10.000	ug/L	C	U
Hexachlorocyclopentadiene		NA				UNFI	10.000	ug/L	C	U
Hexachloroethane		NA				UNFI	10.000	ug/L	C	U
Indeno(1,2,3-cd)pyrene		NA				UNFI	10.000	ug/L	C	U
Isophorone		NA				UNFI	10.000	ug/L	C	U
N-Nitroso-di-n-propylamine		NA				UNFI	10.000	ug/L	C	U
N-Nitrosodimethylamine		NA				UNFI	10.000	ug/L	C	U
N-Nitrosodiphenylamine		NA				UNFI	10.000	ug/L	C	U
Naphthalene		NA				UNFI	10.000	ug/L	C	U
Nitrobenzene		NA				UNFI	10.000	ug/L	C	U
Pentachlorophenol		NA				UNFI	25.000	ug/L	C	U
Phenanthrene		NA				UNFI	10.000	ug/L	C	U
Phenol		NA				UNFI	10.000	ug/L	C	U
Pyrene		NA				UNFI	10.000	ug/L	C	U
Tributyl phosphate		NA				UNFI	10.000	ug/L	C	U
bis(2-Chloroethoxy)methane		NA				UNFI	10.000	ug/L	C	U
bis(2-Chloroethyl)ether		NA				UNFI	10.000	ug/L	C	U
bis(2-Chloroisopropyl) ether		NA				UNFI	10.000	ug/L	C	U
bis(2-Ethylhexyl) phthalate		NA				UNFI	10.000	ug/L	C	U
p-Chloroaniline		NA				UNFI	10.000	ug/L	C	U
Pesticide Organics/PCBs										
4,4'-DDD		NA				UNFI	0.100	ug/L	C	U
4,4'-DDE		NA				UNFI	0.100	ug/L	C	U
4,4'-DDT		NA				UNFI	0.100	ug/L	C	UJ
Aldrin		NA				UNFI	0.050	ug/L	C	U
Aroclor-1016		NA				UNFI	1.000	ug/L	C	U
Aroclor-1221		NA				UNFI	2.000	ug/L	C	U
Aroclor-1232		NA				UNFI	1.000	ug/L	C	U
Aroclor-1242		NA				UNFI	1.000	ug/L	C	U
Aroclor-1248		NA				UNFI	1.000	ug/L	C	U

TABLE C-12A
(Continued)

PHASE II - CHEMICAL PARAMETERS

BORING NUMBER		2951				2953			
SAMPLE NUMBER		115478				115488			
SAMPLING DATE		05/25/93				06/23/93			
CHEMICAL PARAMETERS	FLTD	RESULTS	UNITS	L	VQ	FLTD	RESULTS	UNITS	L	VQ
Pesticide Organics/PCBs										
Aroclor-1254		NA				UNFI	1.000	ug/L	C	U
Aroclor-1260		NA				UNFI	1.000	ug/L	C	U
Dieldrin		NA				UNFI	0.100	ug/L	C	U
Endosulfan II		NA				UNFI	0.100	ug/L	C	U
Endosulfan sulfate		NA				UNFI	0.100	ug/L	C	U
Endosulfan-I		NA				UNFI	0.050	ug/L	C	U
Endrin		NA				UNFI	0.100	ug/L	C	U
Endrin aldehyde		NA				UNFI	0.100	ug/L	C	U
Endrin ketone		NA				UNFI	0.100	ug/L	C	U
Heptachlor		NA				UNFI	0.050	ug/L	C	U
Heptachlor epoxide		NA				UNFI	0.050	ug/L	C	U
Methoxychlor		NA				UNFI	0.500	ug/L	C	U
Toxaphene		NA				UNFI	5.000	ug/L	C	U
alpha-BHC		NA				UNFI	0.050	ug/L	C	U
alpha-Chlordane		NA				UNFI	0.050	ug/L	C	U
beta-BHC		NA				UNFI	0.050	ug/L	C	U
delta-BHC		NA				UNFI	0.050	ug/L	C	U
gamma-BHC (Lindane)		NA				UNFI	0.050	ug/L	C	U
gamma-Chlordane		NA				UNFI	0.050	ug/L	C	U
General Chemistry										
Alkalinity		NA				UNFI	313.000	mg/L	B	-
Ammonia		NA				UNFI	0.100	mg/L	B	U
Chloride		NA				UNFI	59.200	mg/L	B	-
Fluoride		NA				UNFI	0.170	mg/L	B	-
Nitrate		NA				UNFI	0.100	mg/L	B	R
Phenols		NA				UNFI	0.010	mg/L	B	U
Phosphorus		NA				UNFI	0.040	mg/L	B	-
Sulfate		NA				UNFI	243.200	mg/L	B	-
Sulfide		NA				UNFI	0.500	mg/L	B	U
Total Kjeldahl Nitrogen		NA				UNFI	0.110	mg/L	B	-
Total Organic Carbon		NA				UNFI	1.000	mg/L	B	U
Total Organic Halides		NA				UNFI	0.010	mg/L	B	U
Total Organic Nitrogen		NA				UNFI	0.110	mg/L	B	-

000386

TABLE C-12B
SOLID WASTE LANDFILL
TENTATIVELY IDENTIFIED COMPOUNDS
WATER

Sample Number	Sample Location	Media	Parameter	Result	Units
111540	2037	GW	2-hexenal, (e)-	5	ug/L
111552	1035	GW	propanoic acid, 2-methyl-,	4	ug/L
115468	1952	GW	azacyclotridecan	33	ug/L
115480	1950	GW	heptane, 2,2,4,6,6-pentameth	9	ug/L
115480	1950	GW	1-hexanol, 2-ethyl-	47	ug/L
115480	1950	GW	nonane, 2,3-dimethyl-	190	ug/L
115480	1950	GW	phenol, 2,6-bis(1,1-dimethyl	3	ug/L
115480	1950	GW	hexadecane	2	ug/L
115480	1950	GW	octane, 1,1'-oxybis-	5	ug/L
115480	1950	GW	arsenous acid, tris(trimethy	4	ug/L
115480	1950	GW	cyclotrisiloxane, hexamethyl	11	ug/L
115480	1950	GW	arsenous acid, tris(trimethy	4	ug/L
115480	1950	GW	cyclotrisiloxane, hexamethyl	13	ug/L
115480	1950	GW	cyclotrisiloxane, hexamethyl	14	ug/L
115480	1950	GW	cyclotrisiloxane, hexamethyl	12	ug/L
115480	1950	GW	cyclotrisiloxane, hexamethyl	14	ug/L
115486	FIELD BLANK	FB	cyclohexanone, 2-hydroxy-	6	ug/L
115488	2953	GW	2-pentanone, 4-hydroxy-4-met	3	ug/L

GW - groundwater
FB - field blank

TABLE C-13

TABLE C-13

SOLID WASTE LANDFILL
GROUNDWATER SAMPLES - ENVIRONMENTAL SURVEY
OPERABLE UNIT 2 REMEDIAL INVESTIGATION
FERNALD ENVIRONMENTAL MANAGEMENT PROJECT

Analyte	Samples from Test Pit No. 8		
	10151S3B	10151S4B	10151S5B
METALS (mg/L)			
Arsenic	<0.5	<0.5	NA[a]
Barium	0.18(B)[b]	0.19(B)	NA
Cadmium	<0.02	<0.02	NA
Chromium	0.04	0.05	NA
Lead	<0.3	<0.3	NA
Mercury	NA	0.001	NA
Selenium	<0.5	<0.5	NA
Silver	<0.1	<0.1	NA
RADIONUCLIDES (pCi/g)			
Bismuth-214	NA	NA	I[c]
Cesium-137	NA	NA	I
Radium-226	NA	NA	I
Thorium-228	NA	NA	I
Thorium-232	NA	NA	I
Uranium-235	NA	NA	N[d]
Uranium-238	NA	NA	N
Total Uranium (mg/kg)	2230	3270	NA

[a]NA = Not Analyzed
[b]B = Analyte was found in the blank as well as the sample
[c]I = Nuclide identified by GAMANAL analysis of sample spectrum, but values did not exceed room background at the 95% confidence level; no value reported
[d]N = Nuclide not identified by GAMANAL analysis as being in the sample; revalue reports

TABLE C-14

TABLE C-14

SOLID WASTE LANDFILL
RI/FS IN-SITU LEACHATE RESULTS
OPERABLE UNIT 2 REMEDIAL INVESTIGATION
FERNALD ENVIRONMENTAL MANAGEMENT PROJECT

PHASE I - RADIOLOGICAL PARAMETERS

BORING NUMBER	TRENCH 1			TRENCH 2			TRENCH 2		
SAMPLE NUMBER	039151			039160			039163		
SAMPLING DATE	07/07/92			07/15/92			07/16/92		
RADIOLOGICAL PARAMETERS	RESULTS	UNITS	VQ	RESULTS	UNITS	VQ	RESULTS	UNITS	VQ
CS-137	20.000	pci/L	J	20.000	pci/L	U	20.000	pci/L	U
GROSS ALPHA	254.000	pci/L	NV	321.000	pci/L	NV	697.000	pci/L	NV
GROSS BETA	48.100	pci/L	NV	105.000	pci/L	NV	243.000	pci/L	NV
NP-237	1.000	pci/L	J	1.000	pci/L	J	1.000	pci/L	J
PU-238	1.000	pci/L	J	1.000	pci/L	J	1.000	pci/L	U
PU-239/240	1.000	pci/L	J	1.000	pci/L	J	1.000	pci/L	U
RA-226	1.000	pci/L	J	1.000	pci/L	J	1.000	pci/L	J
RA-228	3.000	pci/L	J	3.000	pci/L	J	3.000	pci/L	J
RU-106	150.000	pci/L	J	150.000	pci/L	U	150.000	pci/L	U
SR-90	5.000	pci/L	R	5.000	pci/L	J	5.000	pci/L	U
TC-99	30.000	pci/L	J	30.000	pci/L	J	30.000	pci/L	U
TH-228	1.000	pci/L	J	1.000	pci/L	J	1.000	pci/L	U
TH-230	1.000	pci/L	J	1.000	pci/L	J	1.000	pci/L	U
TH-232	1.000	pci/L	J	1.000	pci/L	J	1.000	pci/L	U
TH-TOTAL	1.360	ug/L	J	2.380	ug/L	J	1.690	ug/L	-
U-234	125.000	pci/L	J	214.000	pci/L	J	350.000	pci/L	J
U-235/236	5.800	pci/L	J	15.100	pci/L	J	13.700	pci/L	J
U-238	151.000	pci/L	J	311.000	pci/L	J	532.000	pci/L	J
U-TOTAL	375.000	ug/L	J	776.000	ug/L	J	1530.000	ug/L	-

TABLE C-14
(Continued)

PHASE I - RADIOLOGICAL PARAMETERS

BORING NUMBER	TRENCH 3 C		
SAMPLE NUMBER	039155		
SAMPLING DATE	07/13/92		
RADIOLOGICAL PARAMETERS	RESULTS	UNITS	VQ
CS-137	20.000	pci/L	U
GROSS ALPHA	1010.000	pci/L	NV
GROSS BETA	212.000	pci/L	NV
NP-237	1.000	pci/L	J
PU-238	1.000	pci/L	U
PU-239/240	1.000	pci/L	U
RA-226	1.000	pci/L	J
RA-228	3.000	pci/L	J
RU-106	150.000	pci/L	U
SR-90	5.000	pci/L	J
TC-99	30.000	pci/L	J
TH-228	1.000	pci/L	U
TH-230	1.000	pci/L	U
TH-232	1.000	pci/L	U
TH-TOTAL	0.500	ug/L	U
U-234	942.000	pci/L	J
U-235/236	105.000	pci/L	-
U-238	868.000	pci/L	J
U-TOTAL	1610.000	ug/L	-

000390

TABLE C-14
(Continued)

PHASE I - CHEMICAL PARAMETERS

BORING NUMBER	TRENCH 1				TRENCH 3 C				TRENCH 2			
SAMPLE NUMBER	039151				039155				039160			
SAMPLING DATE	07/07/92				07/13/92				07/15/92			
CHEMICAL PARAMETERS	RESULTS	UNITS	L	VQ	RESULTS	UNITS	L	VQ	RESULTS	UNITS	L	VQ
Inorganics												
Aluminum	0.652	mg/L	D	J	1.630	mg/L	D	J	2.110	mg/L	D	J
Antimony	0.030	mg/L	D	UJ	0.030	mg/L	D	UJ	0.030	mg/L	D	R
Arsenic	0.004	mg/L	D	J	0.003	mg/L	D	J	0.018	mg/L	D	UJ
Barium	0.119	mg/L	D	-	0.113	mg/L	D	-	0.162	mg/L	D	-
Beryllium	0.002	mg/L	D	U	0.002	mg/L	D	U	0.002	mg/L	D	U
Cadmium	0.005	mg/L	D	UJ	0.005	mg/L	D	UJ	0.005	mg/L	D	UJ
Calcium	200.000	mg/L	D	-	157.000	mg/L	D	-	166.000	mg/L	D	-
Chromium	0.010	mg/L	D	U	0.010	mg/L	D	UJ	0.010	mg/L	D	U
Cobalt	0.010	mg/L	D	U	0.010	mg/L	D	U	0.010	mg/L	D	U
Copper	0.010	mg/L	D	U	0.014	mg/L	D	-	0.010	mg/L	D	U
Cyanide	0.002	mg/L	D	U	0.002	mg/L	D	U	0.002	mg/L	D	U
Iron	0.511	mg/L	D	J	1.990	mg/L	D	J	3.510	mg/L	D	J
Lead	0.002	mg/L	D	U	0.004	mg/L	D	J	0.004	mg/L	D	J
Magnesium	87.600	mg/L	D	-	66.600	mg/L	D	-	66.700	mg/L	D	-
Manganese	0.091	mg/L	D	-	0.824	mg/L	D	-	0.464	mg/L	D	-
Mercury	0.000	mg/L	D	U	0.000	mg/L	D	U	0.000	mg/L	D	U
Molybdenum	0.020	mg/L	D	U	0.020	mg/L	D	U	0.020	mg/L	D	U
Nickel	0.057	mg/L	D	-	0.032	mg/L	D	-	0.020	mg/L	D	U
Potassium	1.540	mg/L	D	-	1.320	mg/L	D	-	2.690	mg/L	D	-
Selenium	0.002	mg/L	D	UJ	0.002	mg/L	D	U	0.002	mg/L	D	J
Silicon	9.880	mg/L	D	-	9.900	mg/L	D	-	10.900	mg/L	D	-
Silver	0.010	mg/L	D	UJ	0.010	mg/L	D	UJ	0.010	mg/L	D	R
Sodium	26.900	mg/L	D	-	22.400	mg/L	D	-	28.600	mg/L	D	-
Thallium	0.002	mg/L	D	U	0.002	mg/L	D	U	0.002	mg/L	D	J
Tin	0.200	mg/L	D	U	0.200	mg/L	D	U	0.200	mg/L	D	UJ
Vanadium	0.010	mg/L	D	U	0.010	mg/L	D	U	0.010	mg/L	D	U
Zinc	0.026	mg/L	D	-	0.026	mg/L	D	-	0.053	mg/L	D	-
Volatile Organics												
1,1,1,2-Tetrachloroethane	10.000	ug/L	D	U	10.000	ug/L	D	UJ	10.000	ug/L	D	U
1,1,1-Trichloroethane	5.000	ug/L	D	U	5.000	ug/L	D	UJ	5.000	ug/L	D	U
1,1,2,2-Tetrachloroethane	5.000	ug/L	D	U	5.000	ug/L	D	UJ	5.000	ug/L	D	U
1,1,2-Trichloroethane	5.000	ug/L	D	UJ	5.000	ug/L	D	UJ	5.000	ug/L	D	U
1,1-Dichloroethane	5.000	ug/L	D	U	5.000	ug/L	D	U	5.000	ug/L	D	U
1,1-Dichloroethene	5.000	ug/L	D	U	5.000	ug/L	D	U	5.000	ug/L	D	U
1,2,3-Trichloropropane	10.000	ug/L	D	U	10.000	ug/L	D	U	10.000	ug/L	D	U
1,2-Dibromo-3-chloropropane	10.000	ug/L	D	UJ	10.000	ug/L	D	R	10.000	ug/L	D	U
1,2-Dibromoethane	10.000	ug/L	D	U	10.000	ug/L	D	U	10.000	ug/L	D	U
1,2-Dichloroethane	5.000	ug/L	D	U	5.000	ug/L	D	U	5.000	ug/L	D	U
1,2-Dichloroethene	5.000	ug/L	D	U	5.000	ug/L	D	U	1.000	ug/L	D	UJ
1,2-Dichloropropane	5.000	ug/L	D	U	5.000	ug/L	D	U	5.000	ug/L	D	U

TABLE C-14
(Continued)

PHASE I - CHEMICAL PARAMETERS

BORING NUMBER	TRENCH 1				TRENCH 3 C				TRENCH 2			
SAMPLE NUMBER	039151				039155				039160			
SAMPLING DATE	07/07/92				07/13/92				07/15/92			
CHEMICAL PARAMETERS	RESULTS	UNITS	L	VQ	RESULTS	UNITS	L	VQ	RESULTS	UNITS	L	VQ
Volatile Organics												
1,4-Dioxane	200.000	ug/L	D	R	200.000	ug/L	D	R	47.000	ug/L	D	J
2-Butanone	3.000	ug/L	D	J	16.000	ug/L	D	-	36.000	ug/L	D	U
2-Chloro-1,3-butadiene	10.000	ug/L	D	U	10.000	ug/L	D	UJ	10.000	ug/L	D	UJ
2-Hexanone	10.000	ug/L	D	U	10.000	ug/L	D	R	10.000	ug/L	D	UJ
3-Chloropropene	10.000	ug/L	D	U	10.000	ug/L	D	UJ	10.000	ug/L	D	U
4-Methyl-2-pentanone	10.000	ug/L	D	U	10.000	ug/L	D	R	10.000	ug/L	D	UJ
Acetone	14.000	ug/L	D	U	10.000	ug/L	D	J	13.000	ug/L	D	U
Acetonitrile	20.000	ug/L	D	U	20.000	ug/L	D	U	20.000	ug/L	D	UJ
Acrolein	20.000	ug/L	D	U	20.000	ug/L	D	U	20.000	ug/L	D	U
Acrylonitrile	20.000	ug/L	D	U	20.000	ug/L	D	U	20.000	ug/L	D	UJ
Benzene	5.000	ug/L	D	UJ	5.000	ug/L	D	U	5.000	ug/L	D	U
Bromodichloromethane	5.000	ug/L	D	U	5.000	ug/L	D	UJ	5.000	ug/L	D	U
Bromoform	5.000	ug/L	D	U	5.000	ug/L	D	UJ	5.000	ug/L	D	U
Bromomethane	10.000	ug/L	D	U	10.000	ug/L	D	U	10.000	ug/L	D	U
Carbon Tetrachloride	5.000	ug/L	D	U	5.000	ug/L	D	UJ	5.000	ug/L	D	U
Carbon disulfide	5.000	ug/L	D	U	5.000	ug/L	D	U	5.000	ug/L	D	U
Chlorobenzene	5.000	ug/L	D	U	5.000	ug/L	D	U	5.000	ug/L	D	U
Chloroethane	10.000	ug/L	D	U	10.000	ug/L	D	U	10.000	ug/L	D	U
Chloroform	5.000	ug/L	D	U	5.000	ug/L	D	UJ	5.000	ug/L	D	U
Chloromethane	10.000	ug/L	D	U	10.000	ug/L	D	U	10.000	ug/L	D	UJ
Dibromochloromethane	5.000	ug/L	D	UJ	5.000	ug/L	D	UJ	5.000	ug/L	D	U
Dibromomethane	10.000	ug/L	D	U	10.000	ug/L	D	U	10.000	ug/L	D	U
Dichlorodifluoromethane	200.000	ug/L	D	UJ	200.000	ug/L	D	UJ	200.000	ug/L	D	R
Ethyl cyanide	10.000	ug/L	D	UJ	10.000	ug/L	D	U	10.000	ug/L	D	UJ
Ethyl methacrylate	10.000	ug/L	D	UJ	10.000	ug/L	D	U	10.000	ug/L	D	U
Ethylbenzene	5.000	ug/L	D	U	5.000	ug/L	D	U	2.000	ug/L	D	J
Iodomethane	10.000	ug/L	D	U	10.000	ug/L	D	UJ	10.000	ug/L	D	UJ
Isobutyl alcohol	200.000	ug/L	D	U	200.000	ug/L	D	U	200.000	ug/L	D	U
Methacrylonitrile	10.000	ug/L	D	U	10.000	ug/L	D	U	10.000	ug/L	D	U
Methyl methacrylate	10.000	ug/L	D	UJ	10.000	ug/L	D	U	10.000	ug/L	D	U
Methylene chloride	5.000	ug/L	D	U	9.000	ug/L	D	-	5.000	ug/L	D	U
Pyridine	10.000	ug/L	D	U	NA				NA			
Styrene	5.000	ug/L	D	U	5.000	ug/L	D	U	5.000	ug/L	D	U
Tetrachloroethene	5.000	ug/L	D	U	5.000	ug/L	D	U	5.000	ug/L	D	U
Toluene	5.000	ug/L	D	U	2.000	ug/L	D	J	5.000	ug/L	D	U
Trichloroethene	5.000	ug/L	D	U	5.000	ug/L	D	UJ	5.000	ug/L	D	U
Trichlorofluoromethane	10.000	ug/L	D	U	10.000	ug/L	D	U	10.000	ug/L	D	UJ
Vinyl Acetate	10.000	ug/L	D	U	10.000	ug/L	D	U	10.000	ug/L	D	U
Vinyl chloride	10.000	ug/L	D	U	10.000	ug/L	D	U	10.000	ug/L	D	U
Xylenes, Total	5.000	ug/L	D	U	5.000	ug/L	D	U	5.000	ug/L	D	U
cis-1,3-Dichloropropene	5.000	ug/L	D	U	5.000	ug/L	D	UJ	5.000	ug/L	D	U
trans-1,3-Dichloropropene	5.000	ug/L	D	UJ	5.000	ug/L	D	UJ	5.000	ug/L	D	U

000392

TABLE C-14
(Continued)

PHASE I - CHEMICAL PARAMETERS

BORING NUMBER	TRENCH 1				TRENCH 3 C				TRENCH 2			
SAMPLE NUMBER	039151				039155				039160			
SAMPLING DATE	07/07/92				07/13/92				07/15/92			
CHEMICAL PARAMETERS	RESULTS	UNITS	L	VQ	RESULTS	UNITS	L	VQ	RESULTS	UNITS	L	VQ
Volatile Organics												
trans-1,4-Dichloro-2-butene	10.000	ug/L	D	R	10.000	ug/L	D	R	10.000	ug/L	D	UJ
Semivolatile Organics												
1,2,4,5-Tetrachlorobenzene	10.000	ug/L	D	U	10.000	ug/L	D	UJ	10.000	ug/L	D	U
1,2,4-Trichlorobenzene	10.000	ug/L	D	U	10.000	ug/L	D	U	10.000	ug/L	D	U
1,2-Dichlorobenzene	10.000	ug/L	D	U	10.000	ug/L	D	U	10.000	ug/L	D	U
1,3,5-Trinitrobenzene	10.000	ug/L	D	U	10.000	ug/L	D	UJ	10.000	ug/L	D	UJ
1,3-Dichlorobenzene	10.000	ug/L	D	U	10.000	ug/L	D	U	10.000	ug/L	D	U
1,3-Dinitrobenzene	20.000	ug/L	D	U	10.000	ug/L	D	UJ	10.000	ug/L	D	U
1,4-Dichlorobenzene	10.000	ug/L	D	U	10.000	ug/L	D	U	10.000	ug/L	D	U
1,4-Naphthoquinone	10.000	ug/L	D	U	10.000	ug/L	D	UJ	10.000	ug/L	D	UJ
1-Naphthylamine	10.000	ug/L	D	U	120.000	ug/L	D	R	120.000	ug/L	D	UJ
2,3,4,6-Tetrachlorophenol	10.000	ug/L	D	U	10.000	ug/L	D	UJ	10.000	ug/L	D	U
2,4,5-Trichlorophenol	50.000	ug/L	D	U	50.000	ug/L	D	U	50.000	ug/L	D	U
2,4,6-Trichlorophenol	10.000	ug/L	D	U	10.000	ug/L	D	U	10.000	ug/L	D	U
2,4-Dichlorophenol	10.000	ug/L	D	U	10.000	ug/L	D	U	10.000	ug/L	D	U
2,4-Dimethylphenol	10.000	ug/L	D	U	10.000	ug/L	D	U	10.000	ug/L	D	U
2,4-Dinitrophenol	50.000	ug/L	D	UJ	50.000	ug/L	D	U	50.000	ug/L	D	U
2,4-Dinitrotoluene	10.000	ug/L	D	U	10.000	ug/L	D	U	10.000	ug/L	D	U
2,6-Dichlorophenol	10.000	ug/L	D	U	10.000	ug/L	D	UJ	10.000	ug/L	D	U
2,6-Dinitrotoluene	10.000	ug/L	D	U	10.000	ug/L	D	U	10.000	ug/L	D	U
2-Acetylaminofluorene	20.000	ug/L	D	U	10.000	ug/L	D	UJ	10.000	ug/L	D	U
2-Chloronaphthalene	10.000	ug/L	D	U	10.000	ug/L	D	U	10.000	ug/L	D	U
2-Chlorophenol	10.000	ug/L	D	U	10.000	ug/L	D	U	10.000	ug/L	D	U
2-Methylnaphthalene	10.000	ug/L	D	U	10.000	ug/L	D	U	10.000	ug/L	D	U
2-Methylphenol	10.000	ug/L	D	U	10.000	ug/L	D	U	10.000	ug/L	D	U
2-Naphthylamine	10.000	ug/L	D	U	170.000	ug/L	D	R	170.000	ug/L	D	U
2-Nitroaniline	50.000	ug/L	D	U	50.000	ug/L	D	U	50.000	ug/L	D	U
2-Nitrophenol	10.000	ug/L	D	U	10.000	ug/L	D	U	10.000	ug/L	D	U
2-Picoline	NA				70.000	ug/L	D	UJ	70.000	ug/L	D	U
3,3'-Dichlorobenzidine	20.000	ug/L	D	U	20.000	ug/L	D	U	20.000	ug/L	D	U
3,3'-Dimethylbenzidine	10.000	ug/L	D	U	80.000	ug/L	D	R	80.000	ug/L	D	U
3-Methylcholanthrene	10.000	ug/L	D	U	30.000	ug/L	D	UJ	30.000	ug/L	D	U
3-Methylphenol	NA				10.000	ug/L	D	R	10.000	ug/L	D	U
3-Nitroaniline	50.000	ug/L	D	U	50.000	ug/L	D	U	50.000	ug/L	D	U
4,6-Dinitro-2-methylphenol	50.000	ug/L	D	U	50.000	ug/L	D	U	50.000	ug/L	D	U
4-Aminobiphenyl	20.000	ug/L	D	U	50.000	ug/L	D	UJ	50.000	ug/L	D	U
4-Bromophenyl phenyl ether	10.000	ug/L	D	U	10.000	ug/L	D	U	10.000	ug/L	D	U
4-Chloro-3-methylphenol	10.000	ug/L	D	U	10.000	ug/L	D	U	10.000	ug/L	D	U
4-Chlorophenylphenyl ether	10.000	ug/L	D	U	10.000	ug/L	D	U	10.000	ug/L	D	U
4-Methylphenol	2.000	ug/L	D	J	10.000	ug/L	D	U	10.000	ug/L	D	U

000393

6508

TABLE C-14
(Continued)

PHASE I - CHEMICAL PARAMETERS

BORING NUMBER	TRENCH 1				TRENCH 3 C				TRENCH 2			
SAMPLE NUMBER	039151				039155				039160			
SAMPLING DATE	07/07/92				07/13/92				07/15/92			
CHEMICAL PARAMETERS	RESULTS	UNITS	L	VQ	RESULTS	UNITS	L	VQ	RESULTS	UNITS	L	VQ
Semivolatile Organics												
4-Nitroaniline	50.000	ug/L	D	U	50.000	ug/L	D	U	50.000	ug/L	D	U
4-Nitrophenol	50.000	ug/L	D	U	50.000	ug/L	D	U	50.000	ug/L	D	U
4-Nitroquinoline-1-oxide	40.000	ug/L	D	UJ	10.000	ug/L	D	UJ	10.000	ug/L	D	UJ
5-Nitro-o-toluidine	10.000	ug/L	D	U	20.000	ug/L	D	UJ	20.000	ug/L	D	U
7,12-Dimethylbenz(a)anthracene	10.000	ug/L	D	U	20.000	ug/L	D	UJ	20.000	ug/L	D	U
Acenaphthene	10.000	ug/L	D	U	10.000	ug/L	D	U	10.000	ug/L	D	U
Acenaphthylene	10.000	ug/L	D	U	10.000	ug/L	D	U	10.000	ug/L	D	U
Acetophenone	20.000	ug/L	D	U	10.000	ug/L	D	U	10.000	ug/L	D	U
Aniline	NA				50.000	ug/L	D	UJ	50.000	ug/L	D	U
Anthracene	10.000	ug/L	D	U	10.000	ug/L	D	U	10.000	ug/L	D	U
Aramite	2.000	ug/L	D	J	10.000	ug/L	D	R	10.000	ug/L	D	U
Benzo(a)anthracene	10.000	ug/L	D	U	10.000	ug/L	D	U	10.000	ug/L	D	U
Benzo(a)pyrene	10.000	ug/L	D	U	10.000	ug/L	D	U	10.000	ug/L	D	U
Benzo(b)fluoranthene	10.000	ug/L	D	UJ	10.000	ug/L	D	U	10.000	ug/L	D	U
Benzo(g,h,i)perylene	10.000	ug/L	D	U	10.000	ug/L	D	U	10.000	ug/L	D	U
Benzo(k)fluoranthene	10.000	ug/L	D	U	10.000	ug/L	D	UJ	10.000	ug/L	D	U
Benzoic acid	50.000	ug/L	D	U	4.000	ug/L	D	J	50.000	ug/L	D	J
Benzyl alcohol	10.000	ug/L	D	U	10.000	ug/L	D	U	10.000	ug/L	D	U
Butyl benzyl phthalate	10.000	ug/L	D	U	10.000	ug/L	D	U	10.000	ug/L	D	U
Carbazole	10.000	ug/L	D	U	NA				NA			
Chrysene	10.000	ug/L	D	U	10.000	ug/L	D	U	10.000	ug/L	D	U
Di-n-butyl phthalate	10.000	ug/L	D	U	10.000	ug/L	D	U	10.000	ug/L	D	U
Di-n-octyl phthalate	10.000	ug/L	D	U	10.000	ug/L	D	U	10.000	ug/L	D	U
Diallate	10.000	ug/L	D	U	10.000	ug/L	D	UJ	10.000	ug/L	D	UJ
Dibenzo(a,h)anthracene	10.000	ug/L	D	U	10.000	ug/L	D	U	10.000	ug/L	D	U
Dibenzofuran	10.000	ug/L	D	U	10.000	ug/L	D	U	10.000	ug/L	D	U
Diethyl phthalate	10.000	ug/L	D	U	10.000	ug/L	D	U	10.000	ug/L	D	U
Dimethyl phthalate	10.000	ug/L	D	U	10.000	ug/L	D	U	10.000	ug/L	D	U
Diphenylamine	20.000	ug/L	D	U	10.000	ug/L	D	UJ	10.000	ug/L	D	UJ
Ethyl methanesulfonate	20.000	ug/L	D	U	10.000	ug/L	D	UJ	10.000	ug/L	D	U
Fluoranthene	10.000	ug/L	D	U	10.000	ug/L	D	U	10.000	ug/L	D	U
Fluorene	10.000	ug/L	D	U	10.000	ug/L	D	U	10.000	ug/L	D	U
Hexachlorobenzene	10.000	ug/L	D	U	10.000	ug/L	D	U	10.000	ug/L	D	U
Hexachlorobutadiene	10.000	ug/L	D	U	10.000	ug/L	D	U	10.000	ug/L	D	U
Hexachlorocyclopentadiene	10.000	ug/L	D	U	10.000	ug/L	D	U	10.000	ug/L	D	U
Hexachloroethane	10.000	ug/L	D	U	10.000	ug/L	D	U	10.000	ug/L	D	U
Hexachlorophene	1000.000	ug/L	D	U	50.000	ug/L	D	UJ	50.000	ug/L	D	U
Hexachloropropene	10.000	ug/L	D	U	20.000	ug/L	D	R	20.000	ug/L	D	U
Indeno(1,2,3-cd)pyrene	10.000	ug/L	D	U	10.000	ug/L	D	U	10.000	ug/L	D	U
Isophorone	10.000	ug/L	D	U	10.000	ug/L	D	U	10.000	ug/L	D	U
Isosafrole	10.000	ug/L	D	U	10.000	ug/L	D	UJ	10.000	ug/L	D	U
Methapyrilene	100.000	ug/L	D	U	40.000	ug/L	D	UJ	40.000	ug/L	D	U

TABLE C-14
(Continued)

PHASE I - CHEMICAL PARAMETERS

BORING NUMBER	TRENCH 1				TRENCH 3 C				TRENCH 2			
SAMPLE NUMBER	039151				039155				039160			
SAMPLING DATE	07/07/92				07/13/92				07/15/92			
CHEMICAL PARAMETERS	RESULTS	UNITS	L	VQ	RESULTS	UNITS	L	VQ	RESULTS	UNITS	L	VQ
Semivolatile Organics												
Methyl methanesulfonate	NA				10.000	ug/L	D	UJ	10.000	ug/L	D	UJ
Methyl parathion	10.000	ug/L	D	UJ	NA				NA			
N-Nitroso-di-n-propylamine	10.000	ug/L	D	U	10.000	ug/L	D	U	10.000	ug/L	D	U
N-Nitrosodi-n-butylamine	10.000	ug/L	D	U	20.000	ug/L	D	UJ	20.000	ug/L	D	U
N-Nitrosodiethylamine	20.000	ug/L	D	U	10.000	ug/L	D	UJ	10.000	ug/L	D	UJ
N-Nitrosodimethylamine	NA				10.000	ug/L	D	R	10.000	ug/L	D	U
N-Nitrosodiphenylamine	10.000	ug/L	D	U	10.000	ug/L	D	U	10.000	ug/L	D	U
N-Nitrosomethylethylamine	NA				10.000	ug/L	D	UJ	10.000	ug/L	D	UJ
N-Nitrosomorpholine	100.000	ug/L	D	U	10.000	ug/L	D	UJ	10.000	ug/L	D	UJ
N-Nitrosopiperidine	20.000	ug/L	D	U	10.000	ug/L	D	UJ	10.000	ug/L	D	U
N-Nitrosopyrrolidine	40.000	ug/L	D	U	10.000	ug/L	D	UJ	10.000	ug/L	D	UJ
Naphthalene	10.000	ug/L	D	U	10.000	ug/L	D	U	10.000	ug/L	D	U
Nitrobenzene	10.000	ug/L	D	U	10.000	ug/L	D	U	10.000	ug/L	D	U
O,O,O-Triethylphosphorothioate	100.000	ug/L	D	U	10.000	ug/L	D	R	10.000	ug/L	D	UJ
Parathion	10.000	ug/L	D	U	NA				NA			
Pentachlorobenzene	10.000	ug/L	D	U	20.000	ug/L	D	UJ	20.000	ug/L	D	U
Pentachloroethane	100.000	ug/L	D	U	20.000	ug/L	D	UJ	20.000	ug/L	D	U
Pentachloronitrobenzene	20.000	ug/L	D	U	20.000	ug/L	D	R	20.000	ug/L	D	U
Pentachlorophenol	50.000	ug/L	D	U	50.000	ug/L	D	U	50.000	ug/L	D	U
Phenacetin	20.000	ug/L	D	U	10.000	ug/L	D	R	10.000	ug/L	D	U
Phenanthrene	10.000	ug/L	D	U	10.000	ug/L	D	U	10.000	ug/L	D	U
Phenol	10.000	ug/L	D	U	10.000	ug/L	D	U	10.000	ug/L	D	U
Pronamide	10.000	ug/L	D	U	30.000	ug/L	D	UJ	30.000	ug/L	D	U
Pyrene	10.000	ug/L	D	U	10.000	ug/L	D	U	10.000	ug/L	D	U
Safrole	10.000	ug/L	D	U	10.000	ug/L	D	UJ	10.000	ug/L	D	U
Sulfotep	40.000	ug/L	D	U	10.000	ug/L	D	U	10.000	ug/L	D	UJ
a,a-Dimethylphenethylamine	100.000	ug/L	D	UJ	10.000	ug/L	D	U	10.000	ug/L	D	U
bis(2-Chloroethoxy)methane	10.000	ug/L	D	U	10.000	ug/L	D	U	10.000	ug/L	D	U
bis(2-Chloroethyl)ether	10.000	ug/L	D	U	10.000	ug/L	D	U	10.000	ug/L	D	U
bis(2-Chloroisopropyl) ether	10.000	ug/L	D	U	10.000	ug/L	D	U	10.000	ug/L	D	U
bis(2-Ethylhexyl) phthalate	10.000	ug/L	D	U	10.000	ug/L	D	UJ	10.000	ug/L	D	U
o-Toluidine	10.000	ug/L	D	U	10.000	ug/L	D	UJ	10.000	ug/L	D	UJ
p-Chloroaniline	10.000	ug/L	D	U	10.000	ug/L	D	U	10.000	ug/L	D	U
p-Dimethylaminoazobenzene	10.000	ug/L	D	U	30.000	ug/L	D	R	30.000	ug/L	D	U
p-Phenylenediamine	20.000	ug/L	D	U	50.000	ug/L	D	R	50.000	ug/L	D	UJ
Herbicide Organics												
2,4,5-T	2.000	ug/L	D	U	2.000	ug/L	D	U	2.000	ug/L	D	U
2,4,5-TP (Silvex)	1.800	ug/L	D	U	1.800	ug/L	D	U	1.800	ug/L	D	U
2,4-D	10.000	ug/L	D	U	10.000	ug/L	D	U	10.000	ug/L	D	U
Dinoseb	20.000	ug/L	D	U	20.000	ug/L	D	UJ	0.700	ug/L	D	U

TABLE C-14
(Continued)

PHASE I - CHEMICAL PARAMETERS

BORING NUMBER	TRENCH 1				TRENCH 3 C				TRENCH 2			
SAMPLE NUMBER	039151				039155				039160			
SAMPLING DATE	07/07/92				07/13/92				07/15/92			
CHEMICAL PARAMETERS	RESULTS	UNITS	L	VQ	RESULTS	UNITS	L	VQ	RESULTS	UNITS	L	VQ
Pesticide Organics/PCBs												
4,4'-DDD	0.100	ug/L	D	U	0.100	ug/L	D	U	0.100	ug/L	D	U
4,4'-DDE	0.100	ug/L	D	U	0.100	ug/L	D	U	0.100	ug/L	D	U
4,4'-DDT	0.100	ug/L	D	U	0.100	ug/L	D	U	0.100	ug/L	D	U
Aldrin	0.050	ug/L	D	U	0.050	ug/L	D	U	0.050	ug/L	D	U
Aroclor-1016	0.500	ug/L	D	U	0.500	ug/L	D	U	0.500	ug/L	D	U
Aroclor-1221	0.500	ug/L	D	U	0.500	ug/L	D	U	0.500	ug/L	D	U
Aroclor-1232	0.500	ug/L	D	U	0.500	ug/L	D	U	0.500	ug/L	D	U
Aroclor-1242	0.500	ug/L	D	U	0.500	ug/L	D	U	1.700	ug/L	D	U
Aroclor-1248	0.500	ug/L	D	U	0.500	ug/L	D	U	0.500	ug/L	D	U
Aroclor-1254	1.000	ug/L	D	U	1.000	ug/L	D	U	1.000	ug/L	D	U
Aroclor-1260	1.000	ug/L	D	U	1.000	ug/L	D	U	1.000	ug/L	D	U
Chlorobenzilate	0.100	ug/L	D	U	0.100	ug/L	D	U	0.100	ug/L	D	U
Dieldrin	0.100	ug/L	D	U	0.100	ug/L	D	U	0.100	ug/L	D	U
Dimethoate	20.000	ug/L	D	UJ	NA				NA			
Disulfoton	10.000	ug/L	D	U	NA				NA			
Endosulfan II	0.100	ug/L	D	U	0.100	ug/L	D	U	0.100	ug/L	D	U
Endosulfan sulfate	0.100	ug/L	D	U	0.100	ug/L	D	U	0.100	ug/L	D	U
Endosulfan-I	0.050	ug/L	D	U	0.050	ug/L	D	U	0.050	ug/L	D	U
Endrin	0.100	ug/L	D	U	0.100	ug/L	D	U	0.100	ug/L	D	U
Endrin ketone	0.100	ug/L	D	U	0.100	ug/L	D	U	0.100	ug/L	D	U
Famphur	200.000	ug/L	D	R	NA				NA			
Heptachlor	0.050	ug/L	D	U	0.050	ug/L	D	U	0.050	ug/L	D	U
Heptachlor epoxide	0.050	ug/L	D	U	0.050	ug/L	D	U	0.050	ug/L	D	U
Isodrin	0.050	ug/L	D	U	0.050	ug/L	D	U	0.050	ug/L	D	U
Kepone	0.100	ug/L	D	U	0.100	ug/L	D	U	0.100	ug/L	D	U
Methoxychlor	0.500	ug/L	D	U	0.500	ug/L	D	U	0.500	ug/L	D	U
Phorate	10.000	ug/L	D	U	NA				NA			
Thionazin	20.000	ug/L	D	U	NA				NA			
Toxaphene	1.000	ug/L	D	U	1.000	ug/L	D	U	1.000	ug/L	D	U
alpha-BHC	0.050	ug/L	D	U	0.050	ug/L	D	U	0.050	ug/L	D	U
alpha-Chlordane	0.500	ug/L	D	U	0.500	ug/L	D	U	0.500	ug/L	D	U
beta-BHC	0.050	ug/L	D	U	0.050	ug/L	D	U	0.050	ug/L	D	U
delta-BHC	0.050	ug/L	D	U	0.050	ug/L	D	U	0.050	ug/L	D	U
gamma-BHC (Lindane)	0.050	ug/L	D	U	0.050	ug/L	D	U	0.050	ug/L	D	U
gamma-Chlordane	0.500	ug/L	D	U	0.500	ug/L	D	U	0.500	ug/L	D	U
Dioxin Furan												
1,2,3,4,6,7,8-Heptachlorodibenzo-p-dioxin	0.000	ug/L	E	U	0.000	ug/L	E	U	0.001	ug/L	E	UJ
1,2,3,4,6,7,8-Heptachlorodibenzofuran	0.001	ug/L	E	U	0.000	ug/L	E	U	0.000	ug/L	E	UJ
1,2,3,4,7,8,9-Heptachlorodibenzofuran	0.001	ug/L	E	U	0.000	ug/L	E	U	0.000	ug/L	E	UJ
1,2,3,4,7,8-Hexachlorodibenzo-p-dioxin	0.000	ug/L	E	U	0.000	ug/L	E	U	0.000	ug/L	E	UJ

000396

TABLE C-14
(Continued)

PHASE I - CHEMICAL PARAMETERS

BORING NUMBER	TRENCH 1				TRENCH 3 C				TRENCH 2			
SAMPLE NUMBER	039151				039155				039160			
SAMPLING DATE	07/07/92				07/13/92				07/15/92			
CHEMICAL PARAMETERS	RESULTS	UNITS	L	VQ	RESULTS	UNITS	L	VQ	RESULTS	UNITS	L	VQ
Dioxin Furan												
1,2,3,4,7,8-Hexachlorodibenzofuran	0.000	ug/L	E	U	0.000	ug/L	E	U	0.000	ug/L	E	UJ
1,2,3,6,7,8-Hexachlorodibenzo-p-dioxin	0.000	ug/L	E	U	0.000	ug/L	E	U	0.000	ug/L	E	UJ
1,2,3,6,7,8-Hexachlorodibenzofuran	0.000	ug/L	E	U	0.000	ug/L	E	U	0.000	ug/L	E	UJ
1,2,3,7,8,9-Hexachlorodibenzo-p-dioxin	0.000	ug/L	E	U	0.000	ug/L	E	U	0.000	ug/L	E	UJ
1,2,3,7,8,9-Hexachlorodibenzofuran	0.000	ug/L	E	U	0.000	ug/L	E	U	0.000	ug/L	E	UJ
1,2,3,7,8-Pentachlorodibenzo-p-dioxin	0.000	ug/L	E	U	0.001	ug/L	E	U	0.001	ug/L	E	UJ
1,2,3,7,8-Pentachlorodibenzofuran	0.000	ug/L	E	U	0.000	ug/L	E	U	0.001	ug/L	E	UJ
2,3,4,6,7,8-Hexachlorodibenzofuran	0.000	ug/L	E	U	0.000	ug/L	E	U	0.000	ug/L	E	UJ
2,3,4,7,8-Pentachlorodibenzofuran	0.000	ug/L	E	U	0.000	ug/L	E	U	0.001	ug/L	E	UJ
2,3,7,8-TCDD	0.000	ug/L	E	U	0.000	ug/L	E	U	0.000	ug/L	E	UJ
2,3,7,8-TCDF	0.000	ug/L	E	U	0.000	ug/L	E	U	0.001	ug/L	E	UJ
Heptachlorodibenzo-p-dioxin	0.000	ug/L	E	U	0.000	ug/L	E	U	0.001	ug/L	E	UJ
Heptachlorodibenzofuran	0.001	ug/L	E	U	0.000	ug/L	E	U	0.001	ug/L	E	UJ
Hexachlorodibenzo-p-dioxin	0.000	ug/L	E	U	0.000	ug/L	E	U	0.000	ug/L	E	UJ
Hexachlorodibenzofuran	0.000	ug/L	E	U	0.000	ug/L	E	U	0.000	ug/L	E	UJ
Octachlorodibenzo-p-dioxin	0.000	ug/L	E	U	0.000	ug/L	E	-	0.001	ug/L	E	J
Octachlorodibenzofuran	0.000	ug/L	E	U	0.000	ug/L	E	U	0.000	ug/L	E	UJ
Pentachlorodibenzo-p-dioxin	0.000	ug/L	E	U	0.001	ug/L	E	U	0.001	ug/L	E	UJ
Pentachlorodibenzofuran	0.000	ug/L	E	U	0.000	ug/L	E	U	0.001	ug/L	E	UJ
Tetrachlorodibenzo-p-dioxin	0.000	ug/L	E	U	0.000	ug/L	E	U	0.000	ug/L	E	UJ
Tetrachlorodibenzofuran	0.000	ug/L	E	U	0.000	ug/L	E	U	0.000	ug/L	E	UJ
General Chemistry												
Ammonia	0.360	mg/L	C	-	0.460	mg/L	C	-	1.320	mg/L	C	-
Chloride	53.300	mg/L	C	-	19.600	mg/L	C	-	41.300	mg/L	C	-
Fluoride	0.480	mg/L	C	J	0.385	mg/L	C	-	0.590	mg/L	C	J
Nitrate	NA				0.100	mg/L	C	U	NA			
Nitrate/nitrite	0.100	mg/L	C	U	NA				0.100	mg/L	C	U
Phenols	0.010	mg/L	C	U	0.010	mg/L	C	U	0.010	mg/L	C	U
Phosphorus	1.743	mg/L	C	-	2.505	mg/L	C	-	0.355	mg/L	C	-
Sulfate	122.200	mg/L	C	-	57.600	mg/L	C	-	25.600	mg/L	C	-
Sulfide	0.500	mg/L	C	U	0.500	mg/L	C	U	0.500	mg/L	C	U
Total Organic Carbon	10.200	mg/L	C	J	7.190	mg/L	C	-	14.500	mg/L	C	J
Total Organic Halides	0.269	mg/L	C	-	0.204	mg/L	C	-	0.215	mg/L	C	-
Total Organic Nitrogen	1.030	mg/L	C	-	1.080	mg/L	C	U	0.500	mg/L	C	-

000397

6508

TABLE C-14
(Continued)

PHASE I - CHEMICAL PARAMETERS

BORING NUMBER	TRENCH 2				TRENCH 2			
SAMPLE NUMBER	039163				039165			
SAMPLING DATE	07/16/92				07/16/92			
CHEMICAL PARAMETERS	RESULTS	UNITS	L	VQ	RESULTS	UNITS	L	VQ
Inorganics								
Aluminum	2.190	mg/L	D	-	NA			
Antimony	0.030	mg/L	D	R	NA			
Arsenic	0.017	mg/L	D	-	NA			
Barium	0.186	mg/L	D	-	NA			
Beryllium	0.002	mg/L	D	U	NA			
Cadmium	0.005	mg/L	D	UJ	NA			
Calcium	159.000	mg/L	D	-	NA			
Chromium	0.010	mg/L	D	U	NA			
Cobalt	0.010	mg/L	D	U	NA			
Copper	0.010	mg/L	D	U	NA			
Cyanide	0.020	mg/L	D	-	NA			
Iron	4.490	mg/L	D	-	NA			
Lead	0.020	mg/L	D	-	NA			
Magnesium	87.700	mg/L	D	-	NA			
Manganese	0.917	mg/L	D	-	NA			
Mercury	0.000	mg/L	D	U	NA			
Molybdenum	0.020	mg/L	D	U	NA			
Nickel	0.020	mg/L	D	U	NA			
Potassium	7.550	mg/L	D	-	NA			
Selenium	0.002	mg/L	D	U	NA			
Silicon	22.100	mg/L	D	-	NA			
Silver	0.010	mg/L	D	R	NA			
Sodium	95.700	mg/L	D	-	NA			
Thallium	0.002	mg/L	D	U	NA			
Tin	0.200	mg/L	D	U	NA			
Vanadium	0.010	mg/L	D	U	NA			
Zinc	0.154	mg/L	D	J	NA			
Volatile Organics								
1,1,1,2-Tetrachloroethane	10.000	ug/L	D	U	NA			
1,1,1-Trichloroethane	5.000	ug/L	D	U	NA			
1,1,2,2-Tetrachloroethane	5.000	ug/L	D	U	NA			
1,1,2-Trichloroethane	5.000	ug/L	D	U	NA			
1,1-Dichloroethane	5.000	ug/L	D	U	NA			
1,1-Dichloroethene	5.000	ug/L	D	U	NA			
1,2,3-Trichloropropane	10.000	ug/L	D	U	NA			
1,2-Dibromo-3-chloropropane	10.000	ug/L	D	U	NA			
1,2-Dibromoethane	10.000	ug/L	D	U	NA			
1,2-Dichloroethane	5.000	ug/L	D	U	NA			
1,2-Dichloroethene	2.000	ug/L	D	J	NA			
1,2-Dichloropropane	5.000	ug/L	D	U	NA			

000198

TABLE C-14
(Continued)

PHASE I - CHEMICAL PARAMETERS

BORING NUMBER	TRENCH 2				TRENCH 2			
SAMPLE NUMBER	039163				039165			
SAMPLING DATE	07/16/92				07/16/92			
CHEMICAL PARAMETERS	RESULTS	UNITS	L	VQ	RESULTS	UNITS	L	VQ
Volatile Organics								
1,4-Dioxane	200.000	ug/L	D	R	NA			
2-Butanone	10.000	ug/L	D	U	NA			
2-Chloro-1,3-butadiene	10.000	ug/L	D	UJ	NA			
2-Hexanone	10.000	ug/L	D	UJ	NA			
3-Chloropropene	10.000	ug/L	D	U	NA			
4-Methyl-2-pentanone	10.000	ug/L	D	UJ	NA			
Acetone	25.000	ug/L	D	-	NA			
Acetonitrile	20.000	ug/L	D	UJ	NA			
Acrolein	20.000	ug/L	D	U	NA			
Acrylonitrile	20.000	ug/L	D	UJ	NA			
Benzene	5.000	ug/L	D	U	NA			
Bromodichloromethane	5.000	ug/L	D	U	NA			
Bromoform	5.000	ug/L	D	U	NA			
Bromomethane	10.000	ug/L	D	U	NA			
Carbon Tetrachloride	5.000	ug/L	D	U	NA			
Carbon disulfide	5.000	ug/L	D	U	NA			
Chlorobenzene	5.000	ug/L	D	U	NA			
Chloroethane	10.000	ug/L	D	U	NA			
Chloroform	5.000	ug/L	D	U	NA			
Chloromethane	10.000	ug/L	D	UJ	NA			
Dibromochloromethane	5.000	ug/L	D	U	NA			
Dibromomethane	10.000	ug/L	D	U	NA			
Dichlorodifluoromethane	200.000	ug/L	D	R	NA			
Ethyl cyanide	10.000	ug/L	D	UJ	NA			
Ethyl methacrylate	10.000	ug/L	D	U	NA			
Ethylbenzene	1.000	ug/L	D	J	NA			
Iodomethane	10.000	ug/L	D	U	NA			
Isobutyl alcohol	200.000	ug/L	D	U	NA			
Methacrylonitrile	10.000	ug/L	D	U	NA			
Methyl methacrylate	10.000	ug/L	D	U	NA			
Methylene chloride	5.000	ug/L	D	U	NA			
Styrene	5.000	ug/L	D	U	NA			
Tetrachloroethene	5.000	ug/L	D	U	NA			
Toluene	57.000	ug/L	D	-	NA			
Trichloroethene	5.000	ug/L	D	U	NA			
Trichlorofluoromethane	18.000	ug/L	D	J	NA			
Vinyl Acetate	10.000	ug/L	D	U	NA			
Vinyl chloride	10.000	ug/L	D	U	NA			
Xylenes, Total	5.000	ug/L	D	U	NA			
cis-1,3-Dichloropropene	5.000	ug/L	D	U	NA			
trans-1,3-Dichloropropene	5.000	ug/L	D	U	NA			
trans-1,4-Dichloro-2-butene	10.000	ug/L	D	R	NA			

TABLE C-14
(Continued)

PHASE I - CHEMICAL PARAMETERS

BORING NUMBER	TRENCH 2				TRENCH 2			
SAMPLE NUMBER	039163				039165			
SAMPLING DATE	07/16/92				07/16/92			
CHEMICAL PARAMETERS	RESULTS	UNITS	L	VQ	RESULTS	UNITS	L	VQ
Semivolatile Organics								
1,2,4,5-Tetrachlorobenzene	10.000	ug/L	D	UJ	NA			
1,2,4-Trichlorobenzene	10.000	ug/L	D	UJ	NA			
1,2-Dichlorobenzene	10.000	ug/L	D	UJ	NA			
1,3,5-Trinitrobenzene	10.000	ug/L	D	UJ	NA			
1,3-Dichlorobenzene	10.000	ug/L	D	UJ	NA			
1,3-Dinitrobenzene	10.000	ug/L	D	UJ	NA			
1,4-Dichlorobenzene	10.000	ug/L	D	UJ	NA			
1,4-Naphthoquinone	10.000	ug/L	D	UJ	NA			
1-Naphthylamine	120.000	ug/L	D	UJ	NA			
2,3,4,6-Tetrachlorophenol	10.000	ug/L	D	UJ	NA			
2,4,5-Trichlorophenol	50.000	ug/L	D	U	NA			
2,4,6-Trichlorophenol	10.000	ug/L	D	U	NA			
2,4-Dichlorophenol	10.000	ug/L	D	U	NA			
2,4-Dimethylphenol	140.000	ug/L	D	-	NA			
2,4-Dinitrophenol	50.000	ug/L	D	U	NA			
2,4-Dinitrotoluene	10.000	ug/L	D	UJ	NA			
2,6-Dichlorophenol	10.000	ug/L	D	UJ	NA			
2,6-Dinitrotoluene	10.000	ug/L	D	UJ	NA			
2-Acetylaminofluorene	10.000	ug/L	D	UJ	NA			
2-Chloronaphthalene	10.000	ug/L	D	UJ	NA			
2-Chlorophenol	10.000	ug/L	D	U	NA			
2-Methylnaphthalene	70.000	ug/L	D	-	NA			
2-Methylphenol	48.000	ug/L	D	-	NA			
2-Naphthylamine	170.000	ug/L	D	UJ	NA			
2-Nitroaniline	50.000	ug/L	D	UJ	NA			
2-Nitrophenol	10.000	ug/L	D	U	NA			
2-Picoline	70.000	ug/L	D	UJ	NA			
3,3'-Dichlorobenzidine	20.000	ug/L	D	UJ	NA			
3,3'-Dimethylbenzidine	80.000	ug/L	D	R	NA			
3-Methylcholanthrene	30.000	ug/L	D	UJ	NA			
3-Methylphenol	10.000	ug/L	D	UJ	NA			
3-Nitroaniline	50.000	ug/L	D	UJ	NA			
4,6-Dinitro-2-methylphenol	50.000	ug/L	D	U	NA			
4-Aminobiphenyl	50.000	ug/L	D	UJ	NA			
4-Bromophenyl phenyl ether	10.000	ug/L	D	UJ	NA			
4-Chloro-3-methylphenol	4.000	ug/L	D	J	NA			
4-Chlorophenylphenyl ether	10.000	ug/L	D	UJ	NA			
4-Methylphenol	290.000	ug/L	D	-	NA			
4-Nitroaniline	50.000	ug/L	D	UJ	NA			
4-Nitrophenol	50.000	ug/L	D	U	NA			
4-Nitroquinoline-1-oxide	10.000	ug/L	D	UJ	NA			
5-Nitro-o-toluidine	20.000	ug/L	D	UJ	NA			

TABLE C-14
(Continued)

PHASE I - CHEMICAL PARAMETERS

BORING NUMBER	TRENCH 2				TRENCH 2			
SAMPLE NUMBER	039163				039165			
SAMPLING DATE	07/16/92				07/16/92			
CHEMICAL PARAMETERS	RESULTS	UNITS	L	VQ	RESULTS	UNITS	L	VQ
Semivolatile Organics								
7,12-Dimethylbenz(a)anthracene	20.000	ug/L	D	UJ	NA			
Acenaphthene	89.000	ug/L	D	J	NA			
Acenaphthylene	10.000	ug/L	D	UJ	NA			
Acetophenone	10.000	ug/L	D	U	NA			
Aniline	50.000	ug/L	D	UJ	NA			
Anthracene	25.000	ug/L	D	J	NA			
Aramite	10.000	ug/L	D	R	NA			
Benzo(a)anthracene	10.000	ug/L	D	UJ	NA			
Benzo(a)pyrene	10.000	ug/L	D	UJ	NA			
Benzo(b)fluoranthene	10.000	ug/L	D	UJ	NA			
Benzo(g,h,i)perylene	10.000	ug/L	D	UJ	NA			
Benzo(k)fluoranthene	10.000	ug/L	D	UJ	NA			
Benzoic acid	290.000	ug/L	D	-	NA			
Benzyl alcohol	10.000	ug/L	D	UJ	NA			
Butyl benzyl phthalate	10.000	ug/L	D	UJ	NA			
Chrysene	10.000	ug/L	D	UJ	NA			
Di-n-butyl phthalate	10.000	ug/L	D	UJ	NA			
Di-n-octyl phthalate	10.000	ug/L	D	UJ	NA			
Diallate	10.000	ug/L	D	UJ	NA			
Dibenzo(a,h)anthracene	10.000	ug/L	D	UJ	NA			
Dibenzofuran	59.000	ug/L	D	J	NA			
Diethyl phthalate	10.000	ug/L	D	UJ	NA			
Dimethyl phthalate	10.000	ug/L	D	UJ	NA			
Diphenylamine	10.000	ug/L	D	UJ	NA			
Ethyl methanesulfonate	10.000	ug/L	D	UJ	NA			
Fluoranthene	17.000	ug/L	D	J	NA			
Fluorene	68.000	ug/L	D	J	NA			
Hexachlorobenzene	10.000	ug/L	D	UJ	NA			
Hexachlorobutadiene	10.000	ug/L	D	UJ	NA			
Hexachlorocyclopentadiene	10.000	ug/L	D	UJ	NA			
Hexachloroethane	10.000	ug/L	D	UJ	NA			
Hexachlorophene	50.000	ug/L	D	UJ	NA			
Hexachloropropene	20.000	ug/L	D	UJ	NA			
Indeno(1,2,3-cd)pyrene	10.000	ug/L	D	UJ	NA			
Isophorone	10.000	ug/L	D	UJ	NA			
Isosafrole	10.000	ug/L	D	UJ	NA			
Methapyrilene	40.000	ug/L	D	UJ	NA			
Methyl methanesulfonate	10.000	ug/L	D	UJ	NA			
Methyl parathion	NA				0.100	ug/L	D	U
N-Nitroso-di-n-propylamine	10.000	ug/L	D	UJ	NA			
N-Nitrosodi-n-butylamine	20.000	ug/L	D	UJ	NA			
N-Nitrosodiethylamine	10.000	ug/L	D	UJ	NA			

TABLE C-14
(Continued)

PHASE I - CHEMICAL PARAMETERS

BORING NUMBER	TRENCH 2				TRENCH 2			
SAMPLE NUMBER	039163				039165			
SAMPLING DATE	07/16/92				07/16/92			
CHEMICAL PARAMETERS	RESULTS	UNITS	L	VQ	RESULTS	UNITS	L	VQ
Semivolatile Organics								
N-Nitrosodimethylamine	10.000	ug/L	D	UJ	NA			
N-Nitrosodiphenylamine	10.000	ug/L	D	UJ	NA			
N-Nitrosomethylethylamine	10.000	ug/L	D	UJ	NA			
N-Nitrosomorpholine	10.000	ug/L	D	UJ	NA			
N-Nitrosopiperidine	10.000	ug/L	D	UJ	NA			
N-Nitrosopyrrolidine	10.000	ug/L	D	UJ	NA			
Naphthalene	350.000	ug/L	D	-	NA			
Nitrobenzene	10.000	ug/L	D	UJ	NA			
O,O,O-Triethylphosphorothioate	10.000	ug/L	D	U	NA			
Parathion	NA				0.100	ug/L	D	U
Pentachlorobenzene	20.000	ug/L	D	UJ	NA			
Pentachloroethane	20.000	ug/L	D	UJ	NA			
Pentachloronitrobenzene	20.000	ug/L	D	R	NA			
Pentachlorophenol	50.000	ug/L	D	U	NA			
Phenacetin	10.000	ug/L	D	UJ	NA			
Phenanthrene	89.000	ug/L	D	J	NA			
Phenol	37.000	ug/L	D	-	NA			
Pronamide	30.000	ug/L	D	UJ	NA			
Pyrene	11.000	ug/L	D	J	NA			
Safrole	10.000	ug/L	D	UJ	NA			
Sulfotep	10.000	ug/L	D	NV	NA			
a,a-Dimethylphenethylamine	10.000	ug/L	D	UJ	NA			
bis(2-Chloroethoxy)methane	10.000	ug/L	D	UJ	NA			
bis(2-Chloroethyl)ether	10.000	ug/L	D	UJ	NA			
bis(2-Chloroisopropyl) ether	10.000	ug/L	D	UJ	NA			
bis(2-Ethylhexyl) phthalate	10.000	ug/L	D	UJ	NA			
o-Toluidine	10.000	ug/L	D	UJ	NA			
p-Chloroaniline	10.000	ug/L	D	UJ	NA			
p-Dimethylaminoazobenzene	30.000	ug/L	D	UJ	NA			
p-Phenylenediamine	50.000	ug/L	D	R	NA			
Herbicide Organics								
2,4,5-T	2.000	ug/L	D	U	NA			
2,4,5-TP (Silvex)	1.800	ug/L	D	U	NA			
2,4-D	10.000	ug/L	D	U	NA			
Dinoseb	20.000	ug/L	D	UJ	NA			
Pesticide Organics/PCBs								
4,4'-DDD	0.200	ug/L	D	U	NA			
4,4'-DDE	0.200	ug/L	D	U	NA			

000402

TABLE C-14
(Continued)

PHASE I - CHEMICAL PARAMETERS

BORING NUMBER	TRENCH 2				TRENCH 2			
SAMPLE NUMBER	039163				039165			
SAMPLING DATE	07/16/92				07/16/92			
CHEMICAL PARAMETERS	RESULTS	UNITS	L	VQ	RESULTS	UNITS	L	VQ
Pesticide Organics/PCBs								
4,4'-DDT	0.200	ug/L	D	U	NA			
Aldrin	0.100	ug/L	D	U	NA			
Aroclor-1016	1.000	ug/L	D	U	NA			
Aroclor-1221	1.000	ug/L	D	U	NA			
Aroclor-1232	1.000	ug/L	D	U	NA			
Aroclor-1242	1.000	ug/L	D	U	NA			
Aroclor-1248	1.000	ug/L	D	U	NA			
Aroclor-1254	2.000	ug/L	D	U	NA			
Aroclor-1260	2.000	ug/L	D	U	NA			
Azinphosmethyl	NA				0.500	ug/L	D	U
Chlorobenzilate	0.200	ug/L	D	U	NA			
Demeton	NA				0.100	ug/L	D	U
Diazinon	NA				34.600	ug/L	D	-
Dieldrin	0.200	ug/L	D	U	NA			
Disulfoton	NA				4.400	ug/L	D	-
Endosulfan II	0.200	ug/L	D	U	NA			
Endosulfan sulfate	0.200	ug/L	D	U	NA			
Endosulfan-I	0.100	ug/L	D	U	NA			
Endrin	0.200	ug/L	D	U	NA			
Endrin ketone	0.200	ug/L	D	U	NA			
Ethion	NA				0.100	ug/L	D	U
Heptachlor	0.100	ug/L	D	U	NA			
Heptachlor epoxide	0.100	ug/L	D	U	NA			
Isodrin	0.100	ug/L	D	U	NA			
Kepone	0.200	ug/L	D	U	NA			
Malathion	NA				0.100	ug/L	D	U
Methoxychlor	1.000	ug/L	D	U	NA			
Tetraethylpyrophosphate	NA				0.100	ug/L	D	U
Toxaphene	2.000	ug/L	D	U	NA			
alpha-BHC	0.100	ug/L	D	U	NA			
alpha-Chlordane	1.000	ug/L	D	U	NA			
beta-BHC	0.100	ug/L	D	U	NA			
delta-BHC	0.100	ug/L	D	U	NA			
gamma-BHC (Lindane)	0.100	ug/L	D	UJ	NA			
gamma-Chlordane	1.000	ug/L	D	U	NA			
Dioxin Furan								
1,2,3,4,6,7,8-Heptachlorodibenzo-p-dioxin	0.001	ug/L	E	U	NA			
1,2,3,4,6,7,8-Heptachlorodibenzofuran	0.000	ug/L	E	U	NA			
1,2,3,4,7,8,9-Heptachlorodibenzofuran	0.001	ug/L	E	U	NA			
1,2,3,4,7,8-Hexachlorodibenzo-p-dioxin	0.000	ug/L	E	U	NA			

TABLE C-14
(Continued)

PHASE I - CHEMICAL PARAMETERS

BORING NUMBER	TRENCH 2				TRENCH 2			
SAMPLE NUMBER	039163				039165			
SAMPLING DATE	07/16/92				07/16/92			
CHEMICAL PARAMETERS	RESULTS	UNITS	L	VQ	RESULTS	UNITS	L	VQ
Dioxin Furan								
1,2,3,4,7,8-Hexachlorodibenzofuran	0.000	ug/L	E	U	NA			
1,2,3,6,7,8-Hexachlorodibenzo-p-dioxin	0.000	ug/L	E	U	NA			
1,2,3,6,7,8-Hexachlorodibenzofuran	0.000	ug/L	E	U	NA			
1,2,3,7,8,9-Hexachlorodibenzo-p-dioxin	0.000	ug/L	E	U	NA			
1,2,3,7,8,9-Hexachlorodibenzofuran	0.000	ug/L	E	U	NA			
1,2,3,7,8-Pentachlorodibenzo-p-dioxin	0.001	ug/L	E	U	NA			
1,2,3,7,8-Pentachlorodibenzofuran	0.001	ug/L	E	U	NA			
2,3,4,6,7,8-Hexachlorodibenzofuran	0.000	ug/L	E	U	NA			
2,3,4,7,8-Pentachlorodibenzofuran	0.000	ug/L	E	U	NA			
2,3,7,8-TCDD	0.000	ug/L	E	U	NA			
2,3,7,8-TCDF	0.000	ug/L	E	U	NA			
Heptachlorodibenzo-p-dioxin	0.001	ug/L	E	U	NA			
Heptachlorodibenzofuran	0.003	ug/L	E	U	NA			
Hexachlorodibenzo-p-dioxin	0.000	ug/L	E	U	NA			
Hexachlorodibenzofuran	0.000	ug/L	E	U	NA			
Octachlorodibenzo-p-dioxin	0.002	ug/L	E	-	NA			
Octachlorodibenzofuran	0.001	ug/L	E	U	NA			
Pentachlorodibenzo-p-dioxin	0.001	ug/L	E	U	NA			
Pentachlorodibenzofuran	0.000	ug/L	E	U	NA			
Tetrachlorodibenzo-p-dioxin	0.000	ug/L	E	U	NA			
Tetrachlorodibenzofuran	0.001	ug/L	E	U	NA			
General Chemistry								
Ammonia	1.200	mg/L	C	-	NA			
Chloride	17.600	mg/L	C	-	NA			
Fluoride	1.900	mg/L	C	-	NA			
Nitrate/nitrite	0.100	mg/L	C	U	NA			
Phenols	0.558	mg/L	C	-	NA			
Phosphorus	0.342	mg/L	C	-	NA			
Sulfate	23.460	mg/L	C	-	NA			
Sulfide	0.500	mg/L	C	UJ	NA			
Total Organic Carbon	75.950	mg/L	C	-	NA			
Total Organic Halides	0.195	mg/L	C	-	NA			
Total Organic Nitrogen	2.400	mg/L	C	-	NA			

000104

TABLE C-15

TABLE C-15

SOLID WASTE LANDFILL
RI/FS TCLP RESULTS
OPERABLE UNIT 2 REMEDIAL INVESTIGATION
FERNALD ENVIRONMENTAL MANAGEMENT PROJECT

PHASE I - RADIOLOGICAL PARAMETERS

BORING NUMBER	1808			1808		
SAMPLE NUMBER	067397			067402		
	9 - 10.5			0 - 12.75		
SAMPLING DATE	08/27/91			08/27/91		
RADIOLOGICAL PARAMETERS	RESULTS	UNITS	VQ	RESULTS	UNITS	VQ
CS-137	22.000	pci/L	DJ	20.000	pci/L	UJ
NP-237	1.000	pci/L	UJ	1.000	pci/L	U
PU-238	1.000	pci/L	U	1.000	pci/L	U
PU-239/240	1.000	pci/L	U	1.000	pci/L	U
RA-226	1.000	pci/L	U	1.000	pci/L	U
RA-228	3.000	pci/L	UJ	3.000	pci/L	UJ
RU-106	150.000	pci/L	UJ	150.000	pci/L	UJ
SR-90	5.000	pci/L	R	5.000	pci/L	R
TC-99	30.000	pci/L	UJ	30.000	pci/L	R
TH-228	1.000	pci/L	UJ	1.000	pci/L	UJ
TH-230	1.000	pci/L	UJ	1.000	pci/L	UJ
TH-232	1.000	pci/L	U	1.000	pci/L	U
TH-TOTAL	2.100	ug/L	U	4.000	ug/L	U
U-234	8.740	pci/L	R	24.200	pci/L	R
U-235/236	1.000	pci/L	R	3.230	pci/L	R
U-238	12.600	pci/L	J	41.500	pci/L	J
U-TOTAL	35.200	ug/L	R	113.000	ug/L	R

TABLE C-15
(Continued)

PHASE I - CHEMICAL PARAMETERS

BORING NUMBER	1719				1720				1720			
SAMPLE NUMBER	067301				067318				067309 6-7.5			
SAMPLING DATE	08/08/91				08/10/91				08/10/91			
CHEMICAL PARAMETERS	RESULTS	UNITS	L	VQ	RESULTS	UNITS	L	VQ	RESULTS	UNITS	L	VQ
Inorganics												
Arsenic	0.100	mg/L	C	UJ	0.250	mg/L	C	U	NA			
Barium	0.974	mg/L	C	-	1.070	mg/L	C	-	NA			
Cadmium	0.006	mg/L	C	-	0.011	mg/L	C	-	NA			
Chromium	0.082	mg/L	C	-	0.093	mg/L	C	-	NA			
Lead	0.069	mg/L	C	R	0.090	mg/L	C	-	NA			
Mercury	0.000	mg/L	C	U	0.000	mg/L	C	U	NA			
Selenium	0.149	mg/L	C	J	0.137	mg/L	C	-	NA			
Silver	0.073	mg/L	C	-	0.081	mg/L	C	-	NA			
Volatile Organics												
1,1-Dichloroethene	NA				NA				5.000	ug/L	C	U
1,2-Dichloroethane	NA				NA				5.000	ug/L	C	U
2-Butanone	NA				NA				4.000	ug/L	C	J
Benzene	NA				NA				5.000	ug/L	C	U
Carbon Tetrachloride	NA				NA				5.000	ug/L	C	U
Chlorobenzene	NA				NA				5.000	ug/L	C	U
Chloroform	NA				NA				5.000	ug/L	C	U
Pyridine	20.000	ug/L	C	U	20.000	ug/L	C	U	20.000	ug/L	C	U
Tetrachloroethene	NA				NA				5.000	ug/L	C	U
Trichloroethene	NA				NA				5.000	ug/L	C	U
Vinyl chloride	NA				NA				10.000	ug/L	C	U
Semivolatile Organics												
1,4-Dichlorobenzene	20.000	ug/L	C	U	20.000	ug/L	C	U	20.000	ug/L	C	U
2,4,5-Trichlorophenol	100.000	ug/L	C	UJ	100.000	ug/L	C	U	100.000	ug/L	C	U
2,4,6-Trichlorophenol	20.000	ug/L	C	U	20.000	ug/L	C	U	204.000	ug/L	C	U
2,4-Dinitrotoluene	20.000	ug/L	C	U	20.000	ug/L	C	U	20.000	ug/L	C	U
2-Methylphenol	20.000	ug/L	C	U	20.000	ug/L	C	U	20.000	ug/L	C	U
3-Methylphenol	20.000	ug/L	C	U	20.000	ug/L	C	U	20.000	ug/L	C	U
4-Methylphenol	20.000	ug/L	C	U	20.000	ug/L	C	U	20.000	ug/L	C	U
Hexachlorobenzene	20.000	ug/L	C	U	20.000	ug/L	C	U	20.000	ug/L	C	U
Hexachlorobutadiene	20.000	ug/L	C	U	20.000	ug/L	C	U	20.000	ug/L	C	U
Hexachloroethane	20.000	ug/L	C	U	20.000	ug/L	C	U	20.000	ug/L	C	U
Nitrobenzene	20.000	ug/L	C	U	20.000	ug/L	C	U	20.000	ug/L	C	U
Pentachlorophenol	100.000	ug/L	C	U	100.000	ug/L	C	U	100.000	ug/L	C	U
Herbicide Organics												
2,4,5-TP (Silvex)	1.800	ug/L	C	U	1.800	ug/L	C	U	1.800	ug/L	C	U
2,4-D	10.000	ug/L	C	U	10.000	ug/L	C	U	10.000	ug/L	C	U

TABLE C-15
(Continued)

PHASE I - CHEMICAL PARAMETERS

BORING NUMBER	1719				1720				1720			
SAMPLE NUMBER	067301				067318				067309 6-7.5			
SAMPLING DATE	08/08/91				08/10/91				08/10/91			
CHEMICAL PARAMETERS	RESULTS	UNITS	L	VQ	RESULTS	UNITS	L	VQ	RESULTS	UNITS	L	VQ
Pesticide Organics/PCBs												
Chlordane	NA				0.500	ug/L	C	U	NA			
Endrin	0.100	ug/L	C	U	0.100	ug/L	C	U	NA			
Heptachlor	0.050	ug/L	C	U	0.050	ug/L	C	U	NA			
Heptachlor epoxide	0.050	ug/L	C	U	0.050	ug/L	C	U	NA			
Methoxychlor	0.500	ug/L	C	U	0.500	ug/L	C	U	NA			
Toxaphene	1.000	ug/L	C	U	1.000	ug/L	C	U	NA			
alpha-Chlordane	0.500	ug/L	C	U	0.500	ug/L	C	U	NA			
gamma-BHC (Lindane)	0.050	ug/L	C	U	0.050	ug/L	C	U	NA			
gamma-Chlordane	0.500	ug/L	C	U	0.500	ug/L	C	U	NA			

TABLE C-15
(Continued)

PHASE I - CHEMICAL PARAMETERS

BORING NUMBER	1721				1721				1722			
SAMPLE NUMBER	067245				067236 12-13.5				067261			
SAMPLING DATE	07/28/91				07/27/91				07/30/91			
CHEMICAL PARAMETERS	RESULTS	UNITS	L	VQ	RESULTS	UNITS	L	VQ	RESULTS	UNITS	L	VQ
Inorganics												
Arsenic	0.150	mg/L	C	U	0.050	mg/L	C	U	0.150	mg/L	C	UJ
Barium	0.913	mg/L	C	-	0.839	mg/L	C	-	1.140	mg/L	C	JB
Cadmium	0.006	mg/L	C	U	0.019	mg/L	C	-	0.014	mg/L	C	R
Chromium	0.081	mg/L	C	-	0.061	mg/L	C	-	0.731	mg/L	C	R
Lead	0.040	mg/L	C	U	0.040	mg/L	C	U	0.427	mg/L	C	R
Mercury	0.000	mg/L	C	U	0.000	mg/L	C	U	0.000	mg/L	C	UJ
Selenium	0.080	mg/L	C	U	0.105	mg/L	C	-	0.377	mg/L	C	JB
Silver	0.077	mg/L	C	-	0.055	mg/L	C	-	0.364	mg/L	C	R
Volatile Organics												
1,1-Dichloroethene	5.000	ug/L	C	U	NA				5.000	ug/L	C	U
1,2-Dichloroethane	5.000	ug/L	C	U	NA				5.000	ug/L	C	U
2-Butanone	7.000	ug/L	C	J	NA				2.000	ug/L	C	J
Benzene	5.000	ug/L	C	U	NA				5.000	ug/L	C	U
Carbon Tetrachloride	5.000	ug/L	C	U	NA				5.000	ug/L	C	U
Chlorobenzene	5.000	ug/L	C	U	NA				5.000	ug/L	C	U
Chloroform	5.000	ug/L	C	U	NA				5.000	ug/L	C	U
Pyridine	20.000	ug/L	C	U	NA				20.000	ug/L	C	R
Tetrachloroethene	5.000	ug/L	C	U	NA				30.000	ug/L	C	-
Trichloroethene	5.000	ug/L	C	U	NA				5.000	ug/L	C	U
Vinyl chloride	10.000	ug/L	C	U	NA				10.000	ug/L	C	U
Semivolatile Organics												
1,4-Dichlorobenzene	20.000	ug/L	C	U	NA				20.000	ug/L	C	R
2,4,5-Trichlorophenol	100.000	ug/L	C	U	NA				100.000	ug/L	C	R
2,4,6-Trichlorophenol	20.000	ug/L	C	U	NA				20.000	ug/L	C	R
2,4-Dinitrotoluene	20.000	ug/L	C	U	NA				20.000	ug/L	C	R
2-Methylphenol	20.000	ug/L	C	U	NA				20.000	ug/L	C	R
3-Methylphenol	20.000	ug/L	C	U	NA				20.000	ug/L	C	U
4-Methylphenol	20.000	ug/L	C	U	NA				20.000	ug/L	C	R
Hexachlorobenzene	20.000	ug/L	C	U	NA				20.000	ug/L	C	R
Hexachlorobutadiene	20.000	ug/L	C	U	NA				20.000	ug/L	C	R
Hexachloroethane	20.000	ug/L	C	U	NA				20.000	ug/L	C	R
Nitrobenzene	20.000	ug/L	C	U	NA				20.000	ug/L	C	R
Pentachlorophenol	100.000	ug/L	C	U	NA				8.000	ug/L	C	J
Herbicide Organics												
2,4,5-TP (Silvex)	1.800	ug/L	C	U	1.800	ug/L	C	U	1.800	ug/L	C	U
2,4-D	10.000	ug/L	C	U	10.000	ug/L	C	U	10.000	ug/L	C	U

TABLE C-15
(Continued)

PHASE I - CHEMICAL PARAMETERS

BORING NUMBER	1721				1721				1722			
SAMPLE NUMBER	067245				067236				067261			
					12-13.5							
SAMPLING DATE	07/28/91				07/27/91				07/30/91			
CHEMICAL PARAMETERS	RESULTS	UNITS	L	VQ	RESULTS	UNITS	L	VQ	RESULTS	UNITS	L	VQ
Pesticide Organics/PCBs												
Endrin	0.100	ug/L	C	U	0.100	ug/L	C	U	0.100	ug/L	C	U
Heptachlor	0.050	ug/L	C	U	0.050	ug/L	C	U	0.050	ug/L	C	U
Heptachlor epoxide	0.050	ug/L	C	U	0.050	ug/L	C	U	0.050	ug/L	C	U
Methoxychlor	0.500	ug/L	C	U	0.500	ug/L	C	U	0.500	ug/L	C	U
Toxaphene	1.000	ug/L	C	U	1.000	ug/L	C	U	1.000	ug/L	C	U
alpha-Chlordane	0.500	ug/L	C	U	0.500	ug/L	C	U	0.500	ug/L	C	U
gamma-BHC (Lindane)	0.050	ug/L	C	U	0.050	ug/L	C	U	0.050	ug/L	C	U
gamma-Chlordane	0.500	ug/L	C	U	0.500	ug/L	C	U	0.500	ug/L	C	U

TABLE C-15
(Continued)

PHASE I - CHEMICAL PARAMETERS

BORING NUMBER	1722				1722				1808			
SAMPLE NUMBER	067253				067256				067402			
	6-7.5				11-12.5				0-12.75			
SAMPLING DATE	07/30/91				07/30/91				08/27/91			
CHEMICAL PARAMETERS	RESULTS	UNITS	L	VQ	RESULTS	UNITS	L	VQ	RESULTS	UNITS	L	VQ
Inorganics												
Aluminum	NA				NA				0.967	mg/L	C	-
Antimony	NA				NA				0.030	mg/L	C	U
Arsenic	0.250	mg/L	C	U	0.050	mg/L	C	U	0.002	mg/L	C	-
Barium	2.010	mg/L	C	-	0.085	mg/L	C	-	0.161	mg/L	C	-
Beryllium	NA				NA				0.002	mg/L	C	U
Cadmium	0.038	mg/L	C	-	0.002	mg/L	C	U	0.002	mg/L	C	U
Calcium	NA				NA				17.300	mg/L	C	-
Chromium	1.290	mg/L	C	-	0.010	mg/L	C	-	0.010	mg/L	C	U
Cobalt	NA				NA				0.010	mg/L	C	U
Copper	NA				NA				0.010	mg/L	C	U
Iron	NA				NA				0.824	mg/L	C	-
Lead	0.936	mg/L	C	-	0.040	mg/L	C	U	0.040	mg/L	C	U
Magnesium	NA				NA				4.170	mg/L	C	-
Manganese	NA				NA				0.008	mg/L	C	-
Mercury	0.000	mg/L	C	U	0.000	mg/L	C	U	0.000	mg/L	C	U
Molybdenum	NA				NA				0.010	mg/L	C	U
Nickel	NA				NA				0.020	mg/L	C	U
Potassium	NA				NA				0.489	mg/L	C	-
Selenium	0.741	mg/L	C	-	0.080	mg/L	C	U	0.002	mg/L	C	U
Silicon	NA				NA				4.340	mg/L	C	-
Silver	0.691	mg/L	C	-	0.010	mg/L	C	U	0.010	mg/L	C	U
Sodium	NA				NA				2.280	mg/L	C	-
Thallium	NA				NA				0.150	mg/L	C	U
Vanadium	NA				NA				0.010	mg/L	C	U
Zinc	NA				NA				0.176	mg/L	C	-
Herbicide Organics												
2,4,5-TP (Silvex)	NA				NA				1.800	ug/L	C	U
2,4-D	NA				NA				10.000	ug/L	C	U
Pesticide Organics/PCBs												
Endrin	0.100	ug/L	C	U	0.100	ug/L	C	U	0.100	ug/L	C	U
Heptachlor	NA				NA				0.050	ug/L	C	U
Heptachlor epoxide	NA				NA				0.050	ug/L	C	U
Methoxychlor	0.500	ug/L	C	U	0.500	ug/L	C	U	0.500	ug/L	C	U
Toxaphene	1.000	ug/L	C	U	1.000	ug/L	C	U	1.000	ug/L	C	U
alpha-Chlordane	NA				NA				0.500	ug/L	C	U
gamma-BHC (Lindane)	0.050	ug/L	C	U	0.050	ug/L	C	U	0.050	ug/L	C	U
gamma-Chlordane	NA				NA				0.500	ug/L	C	U
General Chemistry												
Alkalinity as CaCO3	NA				NA				45.000	mg/L	C	-

TABLE C-15
(Continued)

PHASE I - CHEMICAL PARAMETERS

BORING NUMBER	1722				1722				1808			
SAMPLE NUMBER	067253				067256				067402			
	6-7.5				11-12.5				0-12.75			
SAMPLING DATE	07/30/91				07/30/91				08/27/91			
CHEMICAL PARAMETERS	RESULTS	UNITS	L	VQ	RESULTS	UNITS	L	VQ	RESULTS	UNITS	L	VQ
General Chemistry												
Ammonia	NA				NA				0.102	mg/L	C	-
Chloride	NA				NA				0.930	mg/L	C	-
Fluoride	NA				NA				1.400	mg/L	C	-
Nitrate	NA				NA				5.580	mg/L	C	-
Phosphate	NA				NA				0.030	mg/L	C	-
Sulfate	NA				NA				16.500	mg/L	C	-
Total Organic Carbon	NA				NA				4.380	mg/L	C	-
pH	NA				NA				7.220	stand	C	-

TABLE C-15
(Continued)

PHASE I - CHEMICAL PARAMETERS

BORING NUMBER	1808				1888			
SAMPLE NUMBER	067397				067719			
	9-10.5				6-7.5			
SAMPLING DATE	08/27/91				02/23/92			
CHEMICAL PARAMETERS	RESULTS	UNITS	L	VQ	RESULTS	UNITS	L	VQ
Inorganics								
Aluminum	0.553	mg/L	C	R	NA			
Antimony	0.030	mg/L	C	R	NA			
Arsenic	0.050	mg/L	C	U	NA			
Barium	0.064	mg/L	C	-	NA			
Beryllium	0.002	mg/L	C	U	NA			
Cadmium	0.002	mg/L	C	R	NA			
Calcium	18.400	mg/L	C	R	NA			
Chromium	0.010	mg/L	C	U	NA			
Cobalt	0.010	mg/L	C	U	NA			
Copper	0.016	mg/L	C	R	NA			
Iron	1.020	mg/L	C	-	NA			
Lead	0.040	mg/L	C	U	NA			
Magnesium	4.343	mg/L	C	R	NA			
Manganese	0.004	mg/L	C	-	NA			
Mercury	0.000	mg/L	C	U	NA			
Molybdenum	0.010	mg/L	C	U	NA			
Nickel	0.020	mg/L	C	U	NA			
Potassium	0.205	mg/L	C	R	NA			
Selenium	0.080	mg/L	C	U	NA			
Silicon	3.197	mg/L	C	R	NA			
Silver	0.010	mg/L	C	R	NA			
Sodium	1.650	mg/L	C	-	NA			
Thallium	0.002	mg/L	C	R	NA			
Vanadium	0.010	mg/L	C	R	NA			
Zinc	0.079	mg/L	C	R	NA			
Volatile Organics								
1,1-Dichloroethene	5.000	ug/L	C	U	5.000	ug/L	C	U
1,2-Dichloroethane	5.000	ug/L	C	UJ	5.000	ug/L	C	U
2-Butanone	5.000	ug/L	C	J	10.000	ug/L	C	U
Benzene	5.000	ug/L	C	U	5.000	ug/L	C	U
Carbon Tetrachloride	5.000	ug/L	C	UJ	5.000	ug/L	C	U
Chlorobenzene	5.000	ug/L	C	UJ	5.000	ug/L	C	U
Chloroform	5.000	ug/L	C	U	5.000	ug/L	C	U
Pyridine	20.000	ug/L	C	U	20.000	ug/L	C	U
Tetrachloroethene	1.000	ug/L	C	J	5.000	ug/L	C	U
Trichloroethene	5.000	ug/L	C	U	5.000	ug/L	C	U
Vinyl chloride	10.000	ug/L	C	U	10.000	ug/L	C	U
Semivolatile Organics								
1,4-Dichlorobenzene	20.000	ug/L	C	U	20.000	ug/L	C	U

000112

TABLE C-15
(Continued)

PHASE I - CHEMICAL PARAMETERS

BORING NUMBER	1808				1888			
SAMPLE NUMBER	067397				067719			
	9-10.5				6-7.5			
SAMPLING DATE	08/27/91				02/23/92			
CHEMICAL PARAMETERS	RESULTS	UNITS	L	VQ	RESULTS	UNITS	L	VQ
Semivolatile Organics								
2,4,5-Trichlorophenol	100.000	ug/L	C	U	100.000	ug/L	C	U
2,4,6-Trichlorophenol	20.000	ug/L	C	U	20.000	ug/L	C	U
2,4-Dinitrotoluene	20.000	ug/L	C	U	20.000	ug/L	C	U
2-Methylphenol	20.000	ug/L	C	U	20.000	ug/L	C	U
3-Methylphenol	20.000	ug/L	C	U	20.000	ug/L	C	U
4-Methylphenol	20.000	ug/L	C	U	20.000	ug/L	C	U
Hexachlorobenzene	20.000	ug/L	C	U	20.000	ug/L	C	U
Hexachlorobutadiene	20.000	ug/L	C	U	20.000	ug/L	C	U
Hexachloroethane	20.000	ug/L	C	U	20.000	ug/L	C	U
Nitrobenzene	20.000	ug/L	C	U	20.000	ug/L	C	U
Pentachlorophenol	100.000	ug/L	C	U	100.000	ug/L	C	U
General Chemistry								
Alkalinity as CaCO3	48.000	mg/L	C	-	NA			
Ammonia	0.100	mg/L	C	U	NA			
Chloride	0.960	mg/L	C	-	NA			
Fluoride	1.500	mg/L	C	-	NA			
Nitrate	5.580	mg/L	C	-	NA			
Oxidation-Reduction Potential of Water	243.700	mg/L	C	-	NA			
Phosphate	0.040	mg/L	C	-	NA			
Sulfate	9.190	mg/L	C	-	NA			
Total Organic Carbon	8.130	mg/L	C	-	NA			
pH	7.280	stand	C	-	NA			

TABLE C-15
(Continued)

PHASE II - CHEMICAL PARAMETERS

BORING NUMBER	1983				1986				1987			
SAMPLE NUMBER	111478				111454				115358			
	2.5-5				2.5-5				5-7.5			
SAMPLING DATE	05/03/93				04/28/93				05/13/93			
CHEMICAL PARAMETERS	RESULTS	UNITS	L	VQ	RESULTS	UNITS	L	VQ	RESULTS	UNITS	L	VQ
Inorganics												
Arsenic	0.030	mg/L	C	UJ	0.525	mg/L	D	R	0.055	mg/L	C	J
Barium	1.330	mg/L	C	-	1.110	mg/L	D	-	1.460	mg/L	C	-
Cadmium	0.002	mg/L	C	U	0.002	mg/L	D	U	0.002	mg/L	C	U
Chromium	0.003	mg/L	C	U	0.003	mg/L	D	U	0.003	mg/L	C	U
Copper	0.002	mg/L	C	U	0.008	mg/L	D	-	0.002	mg/L	C	U
Iron	0.016	mg/L	C	U	0.064	mg/L	D	-	0.025	mg/L	C	U
Lead	0.015	mg/L	C	UJ	0.125	mg/L	D	U	0.015	mg/L	C	UJ
Manganese	0.078	mg/L	C	J	1.930	mg/L	D	J	0.228	mg/L	C	J
Mercury	0.000	mg/L	C	UJ	0.000	mg/L	D	UJ	0.000	mg/L	C	UJ
Selenium	0.030	mg/L	C	UJ	0.137	mg/L	D	R	0.030	mg/L	C	UJ
Silver	0.002	mg/L	C	UJ	0.013	mg/L	D	UJ	0.002	mg/L	C	UJ
Zinc	0.232	mg/L	C	R	0.195	mg/L	D	R	0.328	mg/L	C	R
Volatile Organics												
1,1-Dichloroethene	NA				5.000	ug/L	D	U	5.000	ug/L	C	U
1,2-Dichloroethane	NA				5.000	ug/L	D	U	5.000	ug/L	C	U
2-Butanone	NA				10.000	ug/L	D	UJ	10.000	ug/L	C	UJ
Benzene	NA				5.000	ug/L	D	U	5.000	ug/L	C	U
Carbon Tetrachloride	NA				5.000	ug/L	D	U	5.000	ug/L	C	U
Chlorobenzene	NA				5.000	ug/L	D	U	5.000	ug/L	C	U
Chloroform	NA				5.000	ug/L	D	U	5.000	ug/L	C	U
Pyridine	NA				250.000	ug/L	D	U	250.000	ug/L	C	U
Tetrachloroethene	NA				5.000	ug/L	D	U	5.000	ug/L	C	U
Trichloroethene	NA				5.000	ug/L	D	U	5.000	ug/L	C	U
Vinyl chloride	NA				10.000	ug/L	D	U	10.000	ug/L	C	U
Semivolatile Organics												
1,4-Dichlorobenzene	NA				50.000	ug/L	D	U	50.000	ug/L	C	U
2,4,5-Trichlorophenol	NA				250.000	ug/L	D	U	50.000	ug/L	C	U
2,4,6-Trichlorophenol	NA				50.000	ug/L	D	U	50.000	ug/L	C	U
2,4-Dinitrotoluene	NA				50.000	ug/L	D	U	50.000	ug/L	C	U
Hexachlorobenzene	NA				50.000	ug/L	D	U	50.000	ug/L	C	U
Hexachlorobutadiene	NA				50.000	ug/L	D	U	50.000	ug/L	C	U
Hexachloroethane	NA				50.000	ug/L	D	U	50.000	ug/L	C	U
Nitrobenzene	NA				50.000	ug/L	D	U	50.000	ug/L	C	U
Pentachlorophenol	NA				250.000	ug/L	D	U	250.000	ug/L	C	U
Total Methylphenol	NA				50.000	ug/L	D	U	50.000	ug/L	C	U
Herbicide Organics												
2,4,5-TP (Silvex)	NA				17.000	ug/L	D	U	17.000	ug/L	C	U

000124

TABLE C-15
(Continued)

PHASE II - CHEMICAL PARAMETERS

BORING NUMBER	1983				1986				1987			
SAMPLE NUMBER	111478				111454				115358			
	2.5-5				2.5-5				5-7.5			
SAMPLING DATE	05/03/93				04/28/93				05/13/93			
CHEMICAL PARAMETERS	RESULTS	UNITS	L	VQ	RESULTS	UNITS	L	VQ	RESULTS	UNITS	L	VQ
Herbicide Organics												
2,4-D	NA				120.000	ug/L	D	U	120.000	ug/L	C	U
Pesticide Organics/PCBs												
Chlordane	NA				1.400	ug/L	D	U	1.400	ug/L	C	U
Endrin	NA				0.600	ug/L	D	U	0.600	ug/L	C	U
Heptachlor	NA				0.300	ug/L	D	U	0.300	ug/L	C	U
Heptachlor epoxide	NA				8.300	ug/L	D	U	8.300	ug/L	C	U
Methoxychlor	NA				18.000	ug/L	D	U	18.000	ug/L	C	U
Toxaphene	NA				24.000	ug/L	D	U	24.000	ug/L	C	U
gamma-BHC (Lindane)	NA				0.400	ug/L	D	U	0.400	ug/L	C	U

000415

6508

TABLE C-15
(Continued)

PHASE II - CHEMICAL PARAMETERS

BORING NUMBER	1990				1991				2951			
SAMPLE NUMBER	115334				115320				111432			
	10-12.5				7.5-10				0-5.1			
SAMPLING DATE	05/10/93				05/06/93				04/21/93			
CHEMICAL PARAMETERS	RESULTS	UNITS	L	VQ	RESULTS	UNITS	L	VQ	RESULTS	UNITS	L	VQ
Inorganics												
Arsenic	0.000	mg/L	C	U	0.049	mg/L	C	UJ	0.030	mg/L	C	UJ
Barium	0.002	mg/L	C	U	1.320	mg/L	C	-	1.140	mg/L	C	-
Cadmium	0.000	mg/L	C	-	0.002	mg/L	C	U	0.002	mg/L	C	U
Chromium	0.000	mg/L	C	U	0.003	mg/L	C	U	0.003	mg/L	C	U
Copper	0.000	mg/L	C	U	0.002	mg/L	C	U	NA			
Iron	0.000	mg/L	C	U	0.046	mg/L	C	U	NA			
Lead	0.000	mg/L	C	U	0.066	mg/L	C	J	0.015	mg/L	C	UJ
Manganese	0.006	mg/L	C	J	5.500	mg/L	C	J	NA			
Mercury	0.000	mg/L	C	UJ	0.000	mg/L	C	UJ	0.000	mg/L	C	UJ
Selenium	0.000	mg/L	C	U	0.129	mg/L	C	J	0.030	mg/L	C	UJ
Silver	0.000	mg/L	C	UJ	0.002	mg/L	C	UJ	0.002	mg/L	C	UJ
Zinc	0.000	mg/L	C	-	0.206	mg/L	C	R	NA			
Volatile Organics												
1,1,1-Trichloroethane	NA				NA				15.000	ug/kg	C	U
1,1,2,2-Tetrachloroethane	NA				NA				15.000	ug/kg	C	U
1,1,2-Trichloroethane	NA				NA				15.000	ug/kg	C	U
1,1-Dichloroethane	NA				NA				15.000	ug/kg	C	U
1,1-Dichloroethene	5.000	ug/L	C	U	5.000	ug/L	C	U	15.000	ug/kg	C	U
1,2-Dichloroethane	5.000	ug/L	C	U	5.000	ug/L	C	U	15.000	ug/kg	C	U
1,2-Dichloroethene	NA				NA				15.000	ug/kg	C	U
1,2-Dichloropropane	NA				NA				15.000	ug/kg	C	U
2-Butanone	10.000	ug/L	C	UJ	10.000	ug/L	C	R	15.000	ug/kg	C	U
2-Hexanone	NA				NA				15.000	ug/kg	C	U
4-Methyl-2-pentanone	NA				NA				15.000	ug/kg	C	U
Acetone	NA				NA				15.000	ug/kg	C	J
Benzene	5.000	ug/L	C	U	5.000	ug/L	C	U	15.000	ug/kg	C	U
Bromodichloromethane	NA				NA				15.000	ug/kg	C	U
Bromoform	NA				NA				15.000	ug/kg	C	U
Bromomethane	NA				NA				15.000	ug/kg	C	U
Carbon Tetrachloride	5.000	ug/L	C	U	5.000	ug/L	C	U	15.000	ug/kg	C	U
Carbon disulfide	NA				NA				15.000	ug/kg	C	U
Chlorobenzene	5.000	ug/L	C	U	5.000	ug/L	C	U	15.000	ug/kg	C	U
Chloroethane	NA				NA				15.000	ug/kg	C	U
Chloroform	5.000	ug/L	C	U	5.000	ug/L	C	U	15.000	ug/kg	C	U
Chloromethane	NA				NA				15.000	ug/kg	C	U
Dibromochloromethane	NA				NA				15.000	ug/kg	C	U
Ethylbenzene	NA				NA				15.000	ug/kg	C	U
Methylene chloride	NA				NA				50.000	ug/kg	C	U
Pyridine	250.000	ug/L	C	U	250.000	ug/L	C	UJ	NA			
Styrene	NA				NA				15.000	ug/kg	C	U

000116

TABLE C-15
(Continued)

PHASE II - CHEMICAL PARAMETERS

BORING NUMBER	1990				1991				2951			
SAMPLE NUMBER	115334				115320				111432			
	10-12.5				7.5-10				0-5.1			
SAMPLING DATE	05/10/93				05/06/93				04/21/93			
CHEMICAL PARAMETERS	RESULTS	UNITS	L	VQ	RESULTS	UNITS	L	VQ	RESULTS	UNITS	L	VQ
Volatile Organics												
Tetrachloroethene	5.000	ug/L	C	U	5.000	ug/L	C	U	15.000	ug/kg	C	U
Toluene	NA				NA				15.000	ug/kg	C	U
Trichloroethene	5.000	ug/L	C	U	5.000	ug/L	C	U	15.000	ug/kg	C	U
Vinyl Acetate	NA				NA				15.000	ug/kg	C	U
Vinyl chloride	10.000	ug/L	C	U	10.000	ug/L	C	U	15.000	ug/kg	C	U
Xylenes, Total	NA				NA				15.000	ug/kg	C	U
cis-1,3-Dichloropropene	NA				NA				15.000	ug/kg	C	U
trans-1,3-Dichloropropene	NA				NA				15.000	ug/kg	C	UJ
Semivolatile Organics												
1,4-Dichlorobenzene	50.000	ug/L	C	U	50.000	ug/L	C	U	NA			
2,4,5-Trichlorophenol	50.000	ug/L	C	U	50.000	ug/L	C	U	NA			
2,4,6-Trichlorophenol	50.000	ug/L	C	U	50.000	ug/L	C	U	NA			
2,4-Dinitrotoluene	50.000	ug/L	C	U	50.000	ug/L	C	U	NA			
Hexachlorobenzene	50.000	ug/L	C	U	50.000	ug/L	C	U	NA			
Hexachlorobutadiene	50.000	ug/L	C	U	50.000	ug/L	C	U	NA			
Hexachloroethane	50.000	ug/L	C	U	50.000	ug/L	C	U	NA			
Nitrobenzene	50.000	ug/L	C	UJ	50.000	ug/L	C	UJ	NA			
Pentachlorophenol	250.000	ug/L	C	U	250.000	ug/L	C	U	NA			
Total Methylphenol	50.000	ug/L	C	U	50.000	ug/L	C	U	NA			
Herbicide Organics												
2,4,5-TP (Silvex)	17000.000	ug/L	C	U	17.000	ug/L	C	U	NA			
2,4-D	120000.000	ug/L	C	U	120.000	ug/L	C	U	NA			
Pesticide Organics/PCBs												
Chlordane	1.400	ug/L	C	U	1.400	ug/L	C	U	NA			
Endrin	0.600	ug/L	C	U	0.600	ug/L	C	U	NA			
Heptachlor	0.300	ug/L	C	U	0.300	ug/L	C	U	NA			
Heptachlor epoxide	8.300	ug/L	C	U	8.300	ug/L	C	U	NA			
Methoxychlor	18.000	ug/L	C	U	18.000	ug/L	C	U	NA			
Toxaphene	24.000	ug/L	C	U	24.000	ug/L	C	U	NA			
gamma-BHC (Lindane)	0.400	ug/L	C	U	0.400	ug/L	C	U	NA			

TABLE C-16

TABLE C-16

SOLID WASTE LANDFILL
CIS RCRA HAZARDOUS CHARACTERISTICS AND
EP-TOXICITY RESULTS
OPERABLE UNIT 2 REMEDIAL INVESTIGATION
FERNALD ENVIRONMENTAL MANAGEMENT PROJECT

RCRA HAZARDOUS CHARACTERISTICS
A review of the RCRA parameters measured showed that all of the borehole samples were within the established limits for ignitability, corrosivity, and reactivity. The EP-TOX metals from each of the six boreholes were below the maximum allowable concentration.

EP-TOXICITY RESULTS

Borehole Number	FEMP ID#	Parameter	Concentration (ug/L)	Qualifier[a]
49-02	FMP-PS-49-018	Barium, EP Leachate	3307.00	-
49-03	FMP-PS-49-032	Barium, EP Leachate	2502.00	-
49-04	FMP-PS-49-046	Barium, EP Leachate	1276.00	-
49-05	FMP-PS-49-055	Barium, EP Leachate	2421.00	-
49-06	FMP-PS-49-071	Barium, EP Leachate	2871.00	-

[a]Laboratory qualifier, no data validation was performed.

6508

TABLE C-17

TABLE C-17

SOLID WASTE LANDFILL
RI/FS QUALITY CONTROL RESULTS
OPERABLE UNIT 2 REMEDIAL INVESTIGATION
FERNALD ENVIRONMENTAL MANAGEMENT PROJECT

PHASE I - RADIOLOGICAL PARAMETERS

QC TYPE	RINSATE			RINSATE			RINSATE		
SAMPLE NUMBER	008392			007952			067728		
ASSOCIATED SAMPLES	008388			007901			67718		
SAMPLING DATE	03/21/88			01/13/88			02/24/92		
RADIOLOGICAL PARAMETERS	RESULTS	UNITS	VQ	RESULTS	UNITS	VQ	RESULTS	UNITS	VQ
CS-137	20.000	pci/L	R	20.000	pci/L	R	20.000	pci/L	J
GROSS ALPHA	NA			NA			3.000	pci/L	NV
GROSS BETA	NA			NA			4.000	pci/L	NV
NP-237	1.000	pci/L	UJ	0.600	pci/L	J	1.000	pci/L	U
PU-238	1.000	pci/L	UJ	0.600	pci/L	J	1.000	pci/L	U
PU-239/240	1.000	pci/L	UJ	0.600	pci/L	J	1.000	pci/L	U
RA-224	NA			NA			20.000	pci/L	J
RA-226	1.000	pci/L	UJ	2.100	pci/L	J	1.000	pci/L	U
RA-228	3.000	pci/L	UJ	5.100	pci/L	J	61.000	pci/L	J
RU-106	150.000	pci/L	R	150.000	pci/L	R	150.000	pci/L	J
SR-90	5.000	pci/L	UJ	5.000	pci/L	J	5.000	pci/L	U
TC-99	30.000	pci/L	UJ	30.000	pci/L	J	30.000	pci/L	J
TH-228	1.000	pci/L	UJ	0.600	pci/L	J	1.000	pci/L	U
TH-230	1.000	pci/L	UJ	1.000	pci/L	J	1.000	pci/L	U
TH-232	1.000	pci/L	UJ	0.800	pci/L	J	1.000	pci/L	U
TH-TOTAL	NA			NA			3.200	ug/L	U
U-234	1.000	pci/L	UJ	3.200	pci/L	J	1.900	pci/L	-
U-235	NA			NA			54.000	pci/L	J
U-235/236	1.000	pci/L	UJ	0.600	pci/L	J	1.650	pci/L	-
U-238	1.000	pci/L	UJ	1.300	pci/L	J	1.130	pci/L	J
U-TOTAL	2.000	ug/L	UJ	2.000	ug/L	J	1.000	ug/L	U

TABLE C-17
(Continued)

PHASE I - RADIOLOGICAL PARAMETERS

QC TYPE	RINSATE
SAMPLE NUMBER	008125
ASSOCIATED SAMPLES	007968, 008107, 008117
SAMPLING DATE	02/17/88

RADIOLOGICAL PARAMETERS	RESULTS	UNITS	VQ
CS-137	20.000	pci/L	R
NP-237	1.000	pci/L	UJ
PU-238	1.000	pci/L	UJ
PU-239/240	1.000	pci/L	UJ
RA-226	1.000	pci/L	UJ
RA-228	3.000	pci/L	UJ
RU-106	150.000	pci/L	R
SR-90	5.000	pci/L	UJ
TC-99	30.000	pci/L	UJ
TH-228	1.000	pci/L	UJ
TH-230	1.000	pci/L	UJ
TH-232	1.000	pci/L	UJ
U-234	1.000	pci/L	J
U-235/236	1.000	pci/L	UJ
U-238	1.100	pci/L	J
U-TOTAL	2.000	ug/L	J

TABLE C-17
(Continued)

PHASE I - CHEMICAL PARAMETERS

QC TYPE	RINSATE				RINSATE				RINSATE			
SAMPLE NUMBER	008392				007952				008186			
ASSOCIATED SAMPLES	008388				007901							
SAMPLING DATE	03/21/88				01/13/88				03/02/88			
CHEMICAL PARAMETERS	RESULTS	UNITS	L	VQ	RESULTS	UNITS	L	VQ	RESULTS	UNITS	L	VQ
Inorganics												
Aluminum	NA				NA				0.040	mg/L	4	UJ
Antimony	NA				NA				0.030	mg/L	4	UJ
Arsenic	0.030	mg/L	4	U	0.020	mg/L	3	U	0.002	mg/L	4	NV
Barium	0.002	mg/L	4	-	0.002	mg/L	3	U	0.054	mg/L	4	J
Beryllium	NA				NA				0.001	mg/L	4	UJ
Cadmium	0.005	mg/L	4	U	0.002	mg/L	3	U	0.005	mg/L	4	UJ
Calcium	NA				0.800	mg/L	3	-	141.000	mg/L	4	J
Chromium	0.010	mg/L	4	U	0.020	mg/L	3	U	0.010	mg/L	4	UJ
Cobalt	NA				NA				0.020	mg/L	4	UJ
Copper	0.010	mg/L	4	-	0.010	mg/L	3	U	0.010	mg/L	4	UJ
Cyanide	NA				NA				0.020	mg/L	4	UJ
Iron	5.400	mg/L	4	-	0.090	mg/L	3	-	0.042	mg/L	4	J
Lead	0.030	mg/L	4	U	0.050	mg/L	3	U	0.014	mg/L	4	UJ
Magnesium	NA				0.040	mg/L	3	-	66.000	mg/L	4	J
Manganese	0.072	mg/L	4	-	0.005	mg/L	3	-	0.262	mg/L	4	J
Mercury	0.001	mg/L	4	U	0.000	mg/L	3	U	0.000	mg/L	4	UJ
Molybdenum	0.010	mg/L	4	U	0.020	mg/L	3	U	NA			
Nickel	0.020	mg/L	4	U	0.020	mg/L	3	U	0.020	mg/L	4	UJ
Potassium	NA				0.200	mg/L	3	U	1.720	mg/L	4	J
Selenium	0.060	mg/L	4	U	0.200	mg/L	3	UJ	0.003	mg/L	4	UJ
Silver	0.005	mg/L	4	R	0.010	mg/L	3	U	0.011	mg/L	4	J
Sodium	1.200	mg/L	4	-	0.050	mg/L	3	U	10.400	mg/L	4	J
Thallium	NA				NA				0.018	mg/L	4	UJ
Vanadium	NA				NA				0.010	mg/L	4	UJ
Zinc	NA				NA				0.034	mg/L	4	J
Semivolatile Organics												
1,2,4-Trichlorobenzene	NA				NA				0.010	mg/L	4	NV
1,2-Dichlorobenzene	NA				NA				0.010	mg/L	3	NV
1,3-Dichlorobenzene	NA				NA				0.010	mg/L	3	NV
1,4-Dichlorobenzene	NA				NA				0.010	mg/L	3	NV
2,4,5-Trichlorophenol	NA				NA				0.050	mg/L	3	NV
2,4,6-Trichlorophenol	NA				NA				0.010	mg/L	3	NV
2,4-Dichlorophenol	NA				NA				0.010	mg/L	3	NV
2,4-Dimethylphenol	NA				NA				0.010	mg/L	3	NV
2,4-Dinitrophenol	NA				NA				0.050	mg/L	3	NV
2,4-Dinitrotoluene	NA				NA				0.010	mg/L	3	NV
2,6-Dinitrotoluene	NA				NA				0.010	mg/L	3	NV
2-Chloronaphthalene	NA				NA				0.010	mg/L	3	NV
2-Chlorophenol	NA				NA				0.010	mg/L	4	NV
2-Methylnaphthalene	NA				NA				0.010	mg/L	3	NV

TABLE C-17
(Continued)

PHASE I - CHEMICAL PARAMETERS

QC TYPE	RINSATE				RINSATE				RINSATE			
SAMPLE NUMBER	008392				007952				008186			
ASSOCIATED SAMPLES	008388				007901							
SAMPLING DATE	03/21/88				01/13/88				03/02/88			
CHEMICAL PARAMETERS	RESULTS	UNITS	L	VQ	RESULTS	UNITS	L	VQ	RESULTS	UNITS	L	VQ
Semivolatile Organics												
2-Methylphenol	NA				NA				0.010	mg/L	3	NV
2-Nitroaniline	NA				NA				0.050	mg/L	4	NV
2-Nitrophenol	NA				NA				0.010	mg/L	3	NV
3,3'-Dichlorobenzidine	NA				NA				0.020	mg/L	4	J
3-Nitroaniline	NA				NA				0.050	mg/L	3	R
4,6-Dinitro-2-methylphenol	NA				NA				0.050	mg/L	3	NV
4-Bromophenyl phenyl ether	NA				NA				0.010	mg/L	3	NV
4-Chloro-3-methylphenol	NA				NA				0.010	mg/L	3	NV
4-Chlorophenylphenyl ether	NA				NA				0.010	mg/L	3	NV
4-Methylphenol	NA				NA				0.010	mg/L	3	NV
4-Nitroaniline	NA				NA				0.050	mg/L	3	R
4-Nitrophenol	NA				NA				0.050	mg/L	3	NV
Acenaphthene	NA				NA				0.010	mg/L	3	NV
Acenaphthylene	NA				NA				0.010	mg/L	3	NV
Anthracene	NA				NA				0.010	mg/L	3	NV
Benzo(a)anthracene	NA				NA				0.010	mg/L	3	NV
Benzo(a)pyrene	NA				NA				0.010	mg/L	3	NV
Benzo(b)fluoranthene	NA				NA				0.010	mg/L	3	NV
Benzo(g,h,i)perylene	NA				NA				0.010	mg/L	3	NV
Benzo(k)fluoranthene	NA				NA				0.010	mg/L	3	NV
Benzoic acid	NA				NA				0.050	mg/L	4	J
Benzyl alcohol	NA				NA				0.010	mg/L	3	NV
Butyl benzyl phthalate	NA				NA				0.010	mg/L	3	NV
Chrysene	NA				NA				0.010	mg/L	3	NV
Di-n-butyl phthalate	NA				NA				0.010	mg/L	3	NV
Di-n-octyl phthalate	NA				NA				0.010	mg/L	3	NV
Dibenzo(a,h)anthracene	NA				NA				0.010	mg/L	3	NV
Dibenzofuran	NA				NA				0.010	mg/L	4	NV
Diethyl phthalate	NA				NA				0.010	mg/L	3	NV
Dimethyl phthalate	NA				NA				0.010	mg/L	3	NV
Fluoranthene	NA				NA				0.010	mg/L	3	NV
Fluorene	NA				NA				0.010	mg/L	4	NV
Hexachlorobenzene	NA				NA				0.010	mg/L	3	NV
Hexachlorobutadiene	NA				NA				0.010	mg/L	3	NV
Hexachlorocyclopentadiene	NA				NA				0.010	mg/L	3	NV
Hexachloroethane	NA				NA				0.010	mg/L	4	NV
Indeno(1,2,3-cd)pyrene	NA				NA				0.010	mg/L	4	NV
Isophorone	NA				NA				0.010	mg/L	4	NV
N-Nitroso-di-n-propylamine	NA				NA				0.010	mg/L	3	NV
N-Nitrosodiphenylamine	NA				NA				0.010	mg/L	3	NV
Naphthalene	NA				NA				0.010	mg/L	3	NV
Nitrobenzene	NA				NA				0.010	mg/L	3	NV

TABLE C-17
(Continued)

PHASE I - CHEMICAL PARAMETERS

QC TYPE	RINSATE				RINSATE				RINSATE			
SAMPLE NUMBER	008392				007952				008186			
ASSOCIATED SAMPLES	008388				007901							
SAMPLING DATE	03/21/88				01/13/88				03/02/88			
CHEMICAL PARAMETERS	RESULTS	UNITS	L	VQ	RESULTS	UNITS	L	VQ	RESULTS	UNITS	L	VQ
Semivolatile Organics												
Pentachlorophenol	NA				NA				0.050	mg/L	3	NV
Phenanthrene	NA				NA				0.010	mg/L	3	NV
Phenol	NA				NA				0.010	mg/L	4	NV
Pyrene	NA				NA				0.010	mg/L	4	NV
bis(2-Chloroethoxy)methane	NA				NA				0.010	mg/L	3	NV
bis(2-Chloroethyl)ether	NA				NA				0.010	mg/L	3	NV
bis(2-Chloroisopropyl) ether	NA				NA				0.010	mg/L	3	NV
bis(2-Ethylhexyl) phthalate	NA				NA				0.002	mg/L	3	R
p-Chloroaniline	NA				NA				0.010	mg/L	3	R
Herbicide Organics												
2,4,5-T	NA				NA				0.000	mg/L	3	NV
2,4,5-TP (Silvex)	NA				NA				0.000	mg/L	4	NV
2,4-D	NA				NA				0.000	mg/L	3	NV
Pesticide Organics/PCBs												
4,4'-DDD	NA				NA				0.000	mg/L	3	NV
4,4'-DDE	NA				NA				0.000	mg/L	3	NV
4,4'-DDT	NA				NA				0.000	mg/L	3	NV
Aldrin	NA				NA				0.000	mg/L	3	NV
Aroclor-1016	NA				NA				0.001	mg/L	3	U
Aroclor-1221	NA				NA				0.001	mg/L	3	U
Aroclor-1232	NA				NA				0.001	mg/L	3	U
Aroclor-1242	NA				NA				0.001	mg/L	3	U
Aroclor-1248	NA				NA				0.001	mg/L	3	U
Aroclor-1254	NA				NA				0.001	mg/L	3	U
Aroclor-1260	NA				NA				0.001	mg/L	3	U
Dieldrin	NA				NA				0.000	mg/L	3	NV
Endosulfan II	NA				NA				0.000	mg/L	3	NV
Endosulfan sulfate	NA				NA				0.000	mg/L	3	NV
Endosulfan-I	NA				NA				0.000	mg/L	4	NV
Endrin	NA				NA				0.000	mg/L	3	NV
Endrin ketone	NA				NA				0.000	mg/L	3	NV
Heptachlor	NA				NA				0.000	mg/L	3	NV
Heptachlor epoxide	NA				NA				0.000	mg/L	3	NV
Methoxychlor	NA				NA				0.001	mg/L	3	NV
Toxaphene	NA				NA				0.001	mg/L	3	UJ
alpha-BHC	NA				NA				0.000	mg/L	4	NV
alpha-Chlordane	NA				NA				0.001	mg/L	3	NV
beta-BHC	NA				NA				0.000	mg/L	3	NV

TABLE C-17
(Continued)

PHASE I - CHEMICAL PARAMETERS

QC TYPE	RINSATE				RINSATE				RINSATE			
SAMPLE NUMBER	008392				007952				008186			
ASSOCIATED SAMPLES	008388				007901							
SAMPLING DATE	03/21/88				01/13/88				03/02/88			
CHEMICAL PARAMETERS	RESULTS	UNITS	L	VQ	RESULTS	UNITS	L	VQ	RESULTS	UNITS	L	VQ
Pesticide Organics/PCBs												
delta-BHC	NA				NA				0.000	mg/L	3	NV
gamma-BHC (Lindane)	NA				NA				0.000	mg/L	3	NV
gamma-Chlordane	NA				NA				0.001	mg/L	3	NV
General Chemistry												
Chloride	1.000	mg/L	4	NV	0.500	mg/L	3	U	NA			
Fluoride	0.500	mg/L	4	NV	0.100	mg/L	3	U	NA			
Hexavalent Chromium	0.020	mg/L	4	U	0.010	mg/L	3	R	NA			
Nitrate	5.000	mg/L	4	NV	0.050	mg/L	3	R	NA			
Phenols	0.010	mg/L	4	NV	0.010	mg/L	3	U	NA			
Specific conductivity	13.980	umhos	4	-	NA				NA			
Sulfate	1.000	mg/L	4	NV	2.600	mg/L	3	J	NA			
pH	8.910	stand	4	-	NA				NA			

000424

TABLE C-17
(Continued)

PHASE I - CHEMICAL PARAMETERS

QC TYPE	FIELD BLANK				FIELD BLANK				FIELD BLANK			
SAMPLE NUMBER	067298				067299				067239			
ASSOCIATED SAMPLES	067287, 067295				067300, 067301				067237			
SAMPLING DATE	08/08/91				08/08/91				07/28/91			
CHEMICAL PARAMETERS	RESULTS	UNITS	L	VQ	RESULTS	UNITS	L	VQ	RESULTS	UNITS	L	VQ
Volatile Organics												
1,1,1,2-Tetrachloroethane	0.005	mg/kg	4	U	NA				0.005	mg/L	3	U
1,1,1-Trichloroethane	0.005	mg/kg	4	U	0.005	mg/kg	4	UJ	0.005	mg/L	3	U
1,1,2,2-Tetrachloroethane	0.005	mg/kg	4	U	0.005	mg/kg	4	U	0.005	mg/L	3	U
1,1,2-Trichloroethane	0.005	mg/kg	4	U	0.005	mg/kg	4	U	0.005	mg/L	3	U
1,1-Dichloroethane	0.005	mg/kg	4	U	0.005	mg/kg	4	U	0.005	mg/L	3	U
1,1-Dichloroethene	0.005	mg/kg	4	U	0.005	mg/kg	4	U	0.005	mg/L	3	U
1,2-Dibromo-3-chloropropane	0.010	mg/kg	4	U	NA				0.010	mg/L	3	U
1,2-Dibromoethane	0.005	mg/kg	4	U	NA				0.005	mg/L	3	U
1,2-Dichloroethane	0.005	mg/kg	4	U	0.005	mg/kg	4	U	0.005	mg/L	3	U
1,2-Dichloroethene	0.005	mg/kg	4	U	0.005	mg/kg	4	U	0.005	mg/L	3	U
1,2-Dichloropropane	0.005	mg/kg	4	U	0.005	mg/kg	4	U	0.005	mg/L	3	U
1,4-Dioxane	0.043	mg/kg	4	J	NA				5.000	mg/L	3	R
2-Butanone	0.001	mg/kg	4	J	0.002	mg/kg	4	J	0.010	mg/L	3	J
2-Chloro-1,3-butadiene	0.005	mg/kg	4	U	NA				0.005	mg/L	3	U
2-Hexanone	0.010	mg/kg	4	U	0.010	mg/kg	4	UJ	0.010	mg/L	3	J
3-Chloropropene	0.005	mg/kg	4	U	NA				0.005	mg/L	3	U
4-Methyl-2-pentanone	0.002	mg/kg	4	J	0.010	mg/kg	4	UJ	0.010	mg/L	3	J
Acetone	0.007	mg/kg	4	J	0.010	mg/kg	4	UJ	0.010	mg/L	3	U
Acetonitrile	1.000	mg/kg	4	R	NA				1.000	mg/L	3	R
Acrolein	0.010	mg/kg	4	UJ	NA				0.010	mg/L	3	R
Acrylonitrile	0.010	mg/kg	4	UJ	NA				0.010	mg/L	3	R
Benzene	0.005	mg/kg	4	U	0.005	mg/kg	4	UJ	0.005	mg/L	3	U
Bromodichloromethane	0.005	mg/kg	4	U	0.005	mg/kg	4	U	0.004	mg/L	3	J
Bromoform	0.005	mg/kg	4	UJ	0.005	mg/kg	4	U	0.005	mg/L	3	U
Bromomethane	0.010	mg/kg	4	UJ	0.010	mg/kg	4	U	0.010	mg/L	3	U
Carbon Tetrachloride	0.005	mg/kg	4	U	0.005	mg/kg	4	U	0.005	mg/L	3	U
Carbon disulfide	0.005	mg/kg	4	U	0.005	mg/kg	4	U	0.005	mg/L	3	U
Chlorobenzene	0.005	mg/kg	4	U	0.005	mg/kg	4	UJ	0.005	mg/L	3	U
Chloroethane	0.010	mg/kg	4	UJ	0.010	mg/kg	4	U	0.010	mg/L	3	U
Chloroform	0.005	mg/kg	4	U	0.005	mg/kg	4	U	0.026	mg/L	3	-
Chloromethane	0.010	mg/kg	4	UJ	0.010	mg/kg	4	U	0.010	mg/L	3	U
Dibromochloromethane	0.005	mg/kg	4	U	0.005	mg/kg	4	U	0.005	mg/L	3	U
Dibromomethane	0.010	mg/kg	4	U	NA				0.010	mg/L	3	U
Dichlorodifluoromethane	0.200	mg/kg	4	R	NA				0.200	mg/L	3	R
Ethyl cyanide	0.100	mg/kg	4	R	NA				0.100	mg/L	3	U
Ethyl methacrylate	0.010	mg/kg	4	U	NA				0.010	mg/L	3	U
Ethylbenzene	0.005	mg/kg	4	U	0.005	mg/kg	4	UJ	0.005	mg/L	3	U
Iodomethane	0.005	mg/kg	4	U	NA				0.005	mg/L	3	U
Isobutyl alcohol	0.020	mg/kg	4	R	NA				0.020	mg/L	3	R
Methacrylonitrile	0.010	mg/kg	4	UJ	NA				0.010	mg/L	3	U
Methyl methacrylate	0.010	mg/kg	4	UJ	NA				0.010	mg/L	3	U
Methylene chloride	0.005	mg/kg	4	U	0.005	mg/kg	4	U	0.002	mg/L	3	UJ

TABLE C-17
(Continued)

PHASE I - CHEMICAL PARAMETERS

QC TYPE												
SAMPLE NUMBER	067298				067299				FIELD BLANK 067239			
ASSOCIATED SAMPLES	067287, 067295				067300, 067301				067237			
SAMPLING DATE	08/08/91				08/08/91				07/28/91			
CHEMICAL PARAMETERS	RESULTS	UNITS	L	VQ	RESULTS	UNITS	L	VQ	RESULTS	UNITS	L	VQ
Volatile Organics												
Pyridine	0.059	mg/kg	4	J	NA				0.020	mg/L	3	U
Styrene	0.005	mg/kg	4	U	0.005	mg/kg	4	UJ	0.005	mg/L	3	U
Tetrachloroethene	0.005	mg/kg	4	U	0.005	mg/kg	4	U	0.005	mg/L	3	U
Toluene	0.002	mg/kg	4	J	0.002	mg/kg	4	UJ	0.001	mg/L	3	-
Trichloroethene	0.005	mg/kg	4	U	0.005	mg/kg	4	U	0.005	mg/L	3	U
Trichlorofluoromethane	0.002	mg/kg	4	J	NA				0.005	mg/L	3	U
Vinyl Acetate	0.010	mg/kg	4	U	0.010	mg/kg	4	UJ	0.010	mg/L	3	U
Vinyl chloride	0.010	mg/kg	4	U	0.010	mg/kg	4	U	0.010	mg/L	3	U
Xylenes, Total	0.005	mg/kg	4	U	0.005	mg/kg	4	UJ	0.005	mg/L	3	U
cis-1,3-Dichloropropene	0.005	mg/kg	4	U	0.005	mg/kg	4	U	0.005	mg/L	3	U
trans-1,3-Dichloropropene	0.005	mg/kg	4	U	0.005	mg/kg	4	U	0.005	mg/L	3	U
trans-1,4-Dichloro-2-butene	0.100	mg/kg	4	U	NA				0.100	mg/L	3	U

000426

TABLE C-17
(Continued)

PHASE I - CHEMICAL PARAMETERS

QC TYPE	FIELD BLANK				FIELD BLANK				TRIP BLANK			
SAMPLE NUMBER	067243				067403				067407			
ASSOCIATED SAMPLES	067237				067394, 067396				067397, 067401, 067402			
SAMPLING DATE	07/28/91				08/27/91				08/27/91			
CHEMICAL PARAMETERS	RESULTS	UNITS	L	VQ	RESULTS	UNITS	L	VQ	RESULTS	UNITS	L	VQ
Volatile Organics												
1,1,1-Trichloroethane	0.005	mg/kg	4	U	0.005	mg/kg	4	UJ	0.005	mg/kg	4	UJ
1,1,2,2-Tetrachloroethane	0.005	mg/kg	4	UJ	0.005	mg/kg	4	UJ	0.005	mg/kg	4	UJ
1,1,2-Trichloroethane	0.005	mg/kg	4	U	0.005	mg/kg	4	UJ	0.005	mg/kg	4	UJ
1,1-Dichloroethane	0.005	mg/kg	4	U	0.005	mg/kg	4	UJ	0.005	mg/kg	4	UJ
1,1-Dichloroethene	0.005	mg/kg	4	U	0.005	mg/kg	4	UJ	0.005	mg/kg	4	UJ
1,2-Dichloroethane	0.005	mg/kg	4	U	0.005	mg/kg	4	UJ	0.005	mg/kg	4	UJ
1,2-Dichloroethene	0.005	mg/kg	4	U	0.005	mg/kg	4	UJ	0.005	mg/kg	4	UJ
1,2-Dichloropropane	0.005	mg/kg	4	U	0.005	mg/kg	4	UJ	0.005	mg/kg	4	UJ
2-Butanone	0.010	mg/kg	4	R	0.003	mg/kg	4	J	0.002	mg/kg	4	J
2-Hexanone	0.010	mg/kg	4	R	0.010	mg/kg	4	UJ	0.010	mg/kg	4	UJ
4-Methyl-2-pentanone	0.010	mg/kg	4	R	0.010	mg/kg	4	UJ	0.010	mg/kg	4	UJ
Acetone	0.010	mg/kg	4	R	0.014	mg/kg	4	J	0.008	mg/kg	4	J
Benzene	0.005	mg/kg	4	U	0.005	mg/kg	4	UJ	0.005	mg/kg	4	UJ
Bromodichloromethane	0.005	mg/kg	4	U	0.005	mg/kg	4	UJ	0.005	mg/kg	4	UJ
Bromoform	0.005	mg/kg	4	U	0.005	mg/kg	4	UJ	0.005	mg/kg	4	UJ
Bromomethane	0.010	mg/kg	4	U	0.010	mg/kg	4	UJ	0.010	mg/kg	4	UJ
Carbon Tetrachloride	0.005	mg/kg	4	U	0.005	mg/kg	4	UJ	0.005	mg/kg	4	UJ
Carbon disulfide	0.005	mg/kg	4	U	0.005	mg/kg	4	UJ	0.005	mg/kg	4	UJ
Chlorobenzene	0.005	mg/kg	4	U	0.005	mg/kg	4	UJ	0.005	mg/kg	4	UJ
Chloroethane	0.010	mg/kg	4	U	0.010	mg/kg	4	UJ	0.010	mg/kg	4	UJ
Chloroform	0.002	mg/kg	4	J	0.005	mg/kg	4	UJ	0.005	mg/kg	4	UJ
Chloromethane	0.010	mg/kg	4	U	0.010	mg/kg	4	UJ	0.010	mg/kg	4	UJ
Dibromochloromethane	0.005	mg/kg	4	U	0.005	mg/kg	4	UJ	0.005	mg/kg	4	UJ
Ethylbenzene	0.005	mg/kg	4	U	0.005	mg/kg	4	UJ	0.005	mg/kg	4	UJ
Methylene chloride	0.001	mg/kg	4	J	0.010	mg/kg	4	J	0.006	mg/kg	4	J
Styrene	0.005	mg/kg	4	U	0.005	mg/kg	4	UJ	0.005	mg/kg	4	UJ
Tetrachloroethene	0.005	mg/kg	4	U	0.005	mg/kg	4	UJ	0.005	mg/kg	4	UJ
Toluene	0.001	mg/kg	4	J	0.005	mg/kg	4	UJ	0.005	mg/kg	4	UJ
Trichloroethene	0.005	mg/kg	4	U	0.005	mg/kg	4	UJ	0.005	mg/kg	4	UJ
Vinyl Acetate	0.010	mg/kg	4	UJ	0.010	mg/kg	4	UJ	0.010	mg/kg	4	UJ
Vinyl chloride	0.010	mg/kg	4	U	0.010	mg/kg	4	UJ	0.010	mg/kg	4	UJ
Xylenes, Total	0.005	mg/kg	4	U	0.005	mg/kg	4	UJ	0.005	mg/kg	4	UJ
cis-1,3-Dichloropropene	0.005	mg/kg	4	U	0.005	mg/kg	4	UJ	0.005	mg/kg	4	UJ
trans-1,3-Dichloropropene	0.005	mg/kg	4	UJ	0.005	mg/kg	4	UJ	0.005	mg/kg	4	UJ

000427
6508

TABLE C-17
(Continued)

PHASE I - CHEMICAL PARAMETERS

QC TYPE	T/F BLANK				RINSATE				TRIP BLANK			
SAMPLE NUMBER	067727				067728				067741			
ASSOCIATED SAMPLES	067714, 067717, 067719				067714, 067717, 067719				067740			
SAMPLING DATE	02/23/92				02/24/92				02/25/92			
CHEMICAL PARAMETERS	RESULTS	UNITS	L	VQ	RESULTS	UNITS	L	VQ	RESULTS	UNITS	L	VQ
Inorganics												
Aluminum	NA				0.135	mg/L	4	-	NA			
Antimony	NA				0.030	mg/L	4	J	NA			
Arsenic	NA				0.002	mg/L	4	U	NA			
Barium	NA				0.007	mg/L	4	-	NA			
Beryllium	NA				0.002	mg/L	4	U	NA			
Cadmium	NA				0.002	mg/L	4	U	NA			
Calcium	NA				0.045	mg/L	4	-	NA			
Chromium	NA				0.010	mg/L	4	U	NA			
Cobalt	NA				0.010	mg/L	4	U	NA			
Copper	NA				0.010	mg/L	4	U	NA			
Iron	NA				0.068	mg/L	4	-	NA			
Lead	NA				0.002	mg/L	4	U	NA			
Magnesium	NA				0.257	mg/L	4	-	NA			
Manganese	NA				0.002	mg/L	4	U	NA			
Mercury	NA				0.000	mg/L	4	UJ	NA			
Molybdenum	NA				0.010	mg/L	4	U	NA			
Nickel	NA				0.020	mg/L	4	U	NA			
Potassium	NA				0.116	mg/L	4	-	NA			
Selenium	NA				0.003	mg/L	4	U	NA			
Silicon	NA				0.385	mg/L	4	-	NA			
Silver	NA				0.010	mg/L	4	J	NA			
Sodium	NA				0.100	mg/L	4	U	NA			
Thallium	NA				0.002	mg/L	4	U	NA			
Tin	NA				0.200	mg/L	4	U	NA			
Vanadium	NA				0.010	mg/L	4	U	NA			
Zinc	NA				0.011	mg/L	4	-	NA			
Volatile Organics												
1,1,1,2-Tetrachloroethane	0.010	mg/L	4	U	0.010	mg/L	4	U	NA			
1,1,1-Trichloroethane	0.005	mg/L	4	U	0.005	mg/L	4	UJ	0.005	mg/L	4	UJ
1,1,2,2-Tetrachloroethane	0.005	mg/L	4	U	0.005	mg/L	4	U	0.005	mg/L	4	U
1,1,2-Trichloroethane	0.005	mg/L	4	U	0.005	mg/L	4	U	0.005	mg/L	4	U
1,1-Dichloroethane	0.005	mg/L	4	U	0.005	mg/L	4	U	0.005	mg/L	4	UJ
1,1-Dichloroethene	0.005	mg/L	4	U	0.005	mg/L	4	U	0.005	mg/L	4	U
1,2-Dibromo-3-chloropropane	0.010	mg/L	4	U	0.010	mg/L	4	U	NA			
1,2-Dibromoethane	0.010	mg/L	4	U	0.010	mg/L	4	U	NA			
1,2-Dichloroethane	0.005	mg/L	4	U	0.005	mg/L	4	UJ	0.005	mg/L	4	U
1,2-Dichloroethene	0.005	mg/L	4	U	0.005	mg/L	4	U	0.005	mg/L	4	U
1,2-Dichloropropane	0.005	mg/L	4	U	0.005	mg/L	4	U	0.005	mg/L	4	U
1,4-Dioxane	0.200	mg/L	4	R	0.200	mg/L	4	R	NA			
2-Butanone	0.010	mg/L	4	UJ	0.010	mg/L	4	U	0.010	mg/L	4	U

TABLE C-17
(Continued)

PHASE I - CHEMICAL PARAMETERS

QC TYPE	T/F BLANK				RINSATE				TRIP BLANK			
SAMPLE NUMBER	067727				067728				067741			
ASSOCIATED SAMPLES	067714, 067717, 067719				067714, 067717, 067719				067740			
SAMPLING DATE	02/23/92				02/24/92				02/25/92			
CHEMICAL PARAMETERS	RESULTS	UNITS	L	VQ	RESULTS	UNITS	L	VQ	RESULTS	UNITS	L	VQ
Volatile Organics												
2-Chloro-1,3-butadiene	0.010	mg/L	4	U	0.010	mg/L	4	UJ	NA			
2-Hexanone	0.010	mg/L	4	UJ	0.010	mg/L	4	U	0.010	mg/L	4	U
3-Chloropropene	0.010	mg/L	4	U	0.010	mg/L	4	U	NA			
4-Methyl-2-pentanone	0.010	mg/L	4	UJ	0.010	mg/L	4	U	0.002	mg/L	4	J
Acetone	0.002	mg/L	4	J	0.005	mg/L	4	J	0.004	mg/L	4	J
Acetonitrile	0.020	mg/L	4	U	0.020	mg/L	4	UJ	NA			
Acrolein	0.020	mg/L	4	U	0.020	mg/L	4	UJ	NA			
Acrylonitrile	0.020	mg/L	4	U	0.020	mg/L	4	U	NA			
Benzene	0.005	mg/L	4	U	0.005	mg/L	4	U	0.005	mg/L	4	U
Bromodichloromethane	0.001	mg/L	4	J	0.001	mg/L	4	J	0.002	mg/L	4	J
Bromoform	0.005	mg/L	4	U	0.005	mg/L	4	UJ	0.005	mg/L	4	U
Bromomethane	0.010	mg/L	4	UJ	0.010	mg/L	4	UJ	0.010	mg/L	4	UJ
Carbon Tetrachloride	0.005	mg/L	4	U	0.005	mg/L	4	UJ	0.005	mg/L	4	U
Carbon disulfide	0.005	mg/L	4	U	0.005	mg/L	4	U	0.005	mg/L	4	U
Chlorobenzene	0.005	mg/L	4	U	0.005	mg/L	4	U	0.005	mg/L	4	U
Chloroethane	0.010	mg/L	4	U	0.010	mg/L	4	U	0.010	mg/L	4	U
Chloroform	0.005	mg/L	4	-	0.004	mg/L	4	J	0.005	mg/L	4	-
Chloromethane	0.010	mg/L	4	U	0.010	mg/L	4	U	0.010	mg/L	4	U
Dibromochloromethane	0.005	mg/L	4	U	0.005	mg/L	4	UJ	0.005	mg/L	4	U
Dibromomethane	0.010	mg/L	4	U	0.010	mg/L	4	U	NA			
Dichlorodifluoromethane	0.200	mg/L	4	R	0.200	mg/L	4	R	NA			
Ethyl cyanide	0.010	mg/L	4	U	0.010	mg/L	4	UJ	NA			
Ethyl methacrylate	0.010	mg/L	4	U	0.010	mg/L	4	U	NA			
Ethylbenzene	0.005	mg/L	4	U	0.005	mg/L	4	U	0.005	mg/L	4	U
Iodomethane	0.010	mg/L	4	U	0.010	mg/L	4	U	NA			
Isobutyl alcohol	0.200	mg/L	4	U	0.200	mg/L	4	UJ	NA			
Methacrylonitrile	0.010	mg/L	4	U	0.010	mg/L	4	U	NA			
Methyl methacrylate	0.010	mg/L	4	U	0.010	mg/L	4	U	NA			
Methylene chloride	0.006	mg/L	4	-	0.045	mg/L	4	J	0.001	mg/L	4	J
Styrene	0.005	mg/L	4	U	0.005	mg/L	4	U	0.005	mg/L	4	U
Tetrachloroethene	0.005	mg/L	4	U	0.005	mg/L	4	U	0.005	mg/L	4	U
Toluene	0.005	mg/L	4	U	0.005	mg/L	4	U	0.005	mg/L	4	U
Trichloroethene	0.005	mg/L	4	U	0.005	mg/L	4	U	0.005	mg/L	4	U
Trichlorofluoromethane	0.010	mg/L	4	U	0.010	mg/L	4	UJ	NA			
Vinyl Acetate	0.010	mg/L	4	U	0.010	mg/L	4	U	0.010	mg/L	4	UJ
Vinyl chloride	0.010	mg/L	4	U	0.010	mg/L	4	U	0.010	mg/L	4	U
Xylenes, Total	0.005	mg/L	4	U	0.005	mg/L	4	U	0.005	mg/L	4	U
cis-1,3-Dichloropropene	0.005	mg/L	4	UJ	0.005	mg/L	4	UJ	0.005	mg/L	4	U
trans-1,3-Dichloropropene	0.005	mg/L	4	UJ	0.005	mg/L	4	UJ	0.005	mg/L	4	U
trans-1,4-Dichloro-2-butene	0.010	mg/L	4	U	0.010	mg/L	4	UJ	NA			
Semivolatile Organics												
1,2,4,5-Tetrachlorobenzene	NA				0.010	mg/L	4	UJ	NA			

TABLE C-17
(Continued)

PHASE I - CHEMICAL PARAMETERS

QC TYPE	T/F BLANK				RINSATE				TRIP BLANK			
SAMPLE NUMBER	067727				067728				067741			
ASSOCIATED SAMPLES	067714, 067717, 067719				067714, 067717, 067719				067740			
SAMPLING DATE	02/23/92				02/24/92				02/25/92			
CHEMICAL PARAMETERS	RESULTS	UNITS	L	VQ	RESULTS	UNITS	L	VQ	RESULTS	UNITS	L	VQ
Semivolatile Organics												
1,2,4-Trichlorobenzene	NA				0.010	mg/L	4	U	NA			
1,2-Dichlorobenzene	NA				0.010	mg/L	4	U	NA			
1,3,5-Trinitrobenzene	NA				0.010	mg/L	4	U	NA			
1,3-Dichlorobenzene	NA				0.010	mg/L	4	U	NA			
1,3-Dinitrobenzene	NA				0.010	mg/L	4	U	NA			
1,4-Dichlorobenzene	NA				0.010	mg/L	4	U	NA			
1,4-Naphthoquinone	NA				0.010	mg/L	4	U	NA			
1-Naphthylamine	NA				0.120	mg/L	4	U	NA			
2,3,4,6-Tetrachlorophenol	NA				0.010	mg/L	4	UJ	NA			
2,4,5-Trichlorophenol	NA				0.050	mg/L	4	U	NA			
2,4,6-Trichlorophenol	NA				0.010	mg/L	4	U	NA			
2,4-Dichlorophenol	NA				0.010	mg/L	4	U	NA			
2,4-Dimethylphenol	NA				0.010	mg/L	4	U	NA			
2,4-Dinitrophenol	NA				0.050	mg/L	4	U	NA			
2,4-Dinitrotoluene	NA				0.010	mg/L	4	U	NA			
2,6-Dichlorophenol	NA				0.010	mg/L	4	UJ	NA			
2,6-Dinitrotoluene	NA				0.010	mg/L	4	U	NA			
2-Acetylaminofluorene	NA				0.010	mg/L	4	U	NA			
2-Chloronaphthalene	NA				0.010	mg/L	4	U	NA			
2-Chlorophenol	NA				0.010	mg/L	4	U	NA			
2-Methylnaphthalene	NA				0.010	mg/L	4	U	NA			
2-Methylphenol	NA				0.010	mg/L	4	U	NA			
2-Naphthylamine	NA				0.170	mg/L	4	U	NA			
2-Nitroaniline	NA				0.050	mg/L	4	U	NA			
2-Nitrophenol	NA				0.010	mg/L	4	U	NA			
2-Picoline	NA				0.070	mg/L	4	U	NA			
3,3'-Dichlorobenzidine	NA				0.020	mg/L	4	U	NA			
3,3'-Dimethylbenzidine	NA				0.080	mg/L	4	U	NA			
3-Methylcholanthrene	NA				0.030	mg/L	4	U	NA			
3-Methylphenol	NA				0.020	mg/L	4	U	NA			
3-Nitroaniline	NA				0.050	mg/L	4	U	NA			
4,6-Dinitro-2-methylphenol	NA				0.050	mg/L	4	U	NA			
4-Aminobiphenyl	NA				0.050	mg/L	4	UJ	NA			
4-Bromophenyl phenyl ether	NA				0.010	mg/L	4	U	NA			
4-Chloro-3-methylphenol	NA				0.010	mg/L	4	U	NA			
4-Chlorophenylphenyl ether	NA				0.010	mg/L	4	U	NA			
4-Methylphenol	NA				0.010	mg/L	4	U	NA			
4-Nitroaniline	NA				0.050	mg/L	4	U	NA			
4-Nitrophenol	NA				0.050	mg/L	4	U	NA			
4-Nitroquinoline-1-oxide	NA				0.010	mg/L	4	UJ	NA			
5-Nitro-o-toluidine	NA				0.020	mg/L	4	U	NA			
7,12-Dimethylbenz(a)anthracene	NA				0.020	mg/L	4	U	NA			

000430

TABLE C-17
(Continued)

PHASE I - CHEMICAL PARAMETERS

QC TYPE	T/F BLANK				RINSATE				TRIP BLANK			
SAMPLE NUMBER	067727				067728				067741			
ASSOCIATED SAMPLES	067714, 067717, 067719				067714, 067717, 067719				067740			
SAMPLING DATE	02/23/92				02/24/92				02/25/92			
CHEMICAL PARAMETERS	RESULTS	UNITS	L	VQ	RESULTS	UNITS	L	VQ	RESULTS	UNITS	L	VQ
Semivolatile Organics												
Acenaphthene	NA				0.010	mg/L	4	U	NA			
Acenaphthylene	NA				0.010	mg/L	4	U	NA			
Acetophenone	NA				0.010	mg/L	4	UJ	NA			
Aniline	NA				0.050	mg/L	4	U	NA			
Anthracene	NA				0.010	mg/L	4	U	NA			
Aramite	NA				0.010	mg/L	4	U	NA			
Benzo(a)anthracene	NA				0.010	mg/L	4	U	NA			
Benzo(a)pyrene	NA				0.010	mg/L	4	U	NA			
Benzo(b)fluoranthene	NA				0.010	mg/L	4	U	NA			
Benzo(g,h,i)perylene	NA				0.010	mg/L	4	U	NA			
Benzo(k)fluoranthene	NA				0.010	mg/L	4	U	NA			
Benzoic acid	NA				0.050	mg/L	4	U	NA			
Benzyl alcohol	NA				0.010	mg/L	4	U	NA			
Butyl benzyl phthalate	NA				0.010	mg/L	4	U	NA			
Chrysene	NA				0.010	mg/L	4	U	NA			
Di-n-butyl phthalate	NA				0.010	mg/L	4	U	NA			
Di-n-octyl phthalate	NA				0.010	mg/L	4	U	NA			
Diallate	NA				0.010	mg/L	4	UJ	NA			
Dibenzo(a,h)anthracene	NA				0.010	mg/L	4	U	NA			
Dibenzofuran	NA				0.010	mg/L	4	U	NA			
Diethyl phthalate	NA				0.010	mg/L	4	U	NA			
Dimethyl phthalate	NA				0.010	mg/L	4	U	NA			
Diphenylamine	NA				0.010	mg/L	4	U	NA			
Ethyl methanesulfonate	NA				0.010	mg/L	4	U	NA			
Fluoranthene	NA				0.010	mg/L	4	U	NA			
Fluorene	NA				0.010	mg/L	4	U	NA			
Hexachlorobenzene	NA				0.010	mg/L	4	U	NA			
Hexachlorobutadiene	NA				0.010	mg/L	4	U	NA			
Hexachlorocyclopentadiene	NA				0.010	mg/L	4	UJ	NA			
Hexachloroethane	NA				0.010	mg/L	4	U	NA			
Hexachlorophene	NA				0.050	mg/L	4	U	NA			
Hexachloropropene	NA				0.020	mg/L	4	R	NA			
Indeno(1,2,3-cd)pyrene	NA				0.010	mg/L	4	U	NA			
Isophorone	NA				0.010	mg/L	4	U	NA			
Isosafrole	NA				0.010	mg/L	4	U	NA			
Methapyrilene	NA				0.040	mg/L	4	UJ	NA			
Methyl methanesulfonate	NA				0.010	mg/L	4	U	NA			
Methyl parathion	NA				0.000	mg/L	4	U	NA			
N-Nitroso-di-n-propylamine	NA				0.010	mg/L	4	U	NA			
N-Nitrosodi-n-butylamine	NA				0.020	mg/L	4	U	NA			
N-Nitrosodiethylamine	NA				0.010	mg/L	4	U	NA			
N-Nitrosodimethylamine	NA				0.010	mg/L	4	U	NA			

TABLE C-17
(Continued)

PHASE I - CHEMICAL PARAMETERS

QC TYPE	T/F BLANK				RINSATE				TRIP BLANK			
SAMPLE NUMBER	067727				067728				067741			
ASSOCIATED SAMPLES	067714, 067717, 067719				067714, 067717, 067719				067740			
SAMPLING DATE	02/23/92				02/24/92				02/25/92			
CHEMICAL PARAMETERS	RESULTS	UNITS	L	VQ	RESULTS	UNITS	L	VQ	RESULTS	UNITS	L	VQ
Semivolatile Organics												
N-Nitrosodiphenylamine	NA				0.010	mg/L	4	U	NA			
N-Nitrosomethylethylamine	NA				0.010	mg/L	4	U	NA			
N-Nitrosomorpholine	NA				0.010	mg/L	4	U	NA			
N-Nitrosopiperidine	NA				0.010	mg/L	4	U	NA			
N-Nitrosopyrrolidine	NA				0.010	mg/L	4	UJ	NA			
Naphthalene	NA				0.010	mg/L	4	U	NA			
Nitrobenzene	NA				0.010	mg/L	4	U	NA			
O,O,O-Triethylphosphorothioate	NA				0.010	mg/L	4	U	NA			
Parathion	NA				0.000	mg/L	4	U	NA			
Pentachlorobenzene	NA				0.020	mg/L	4	UJ	NA			
Pentachloroethane	NA				0.010	mg/L	4	U	NA			
Pentachloronitrobenzene	NA				0.020	mg/L	4	R	NA			
Pentachlorophenol	NA				0.050	mg/L	4	U	NA			
Phenacetin	NA				0.010	mg/L	4	U	NA			
Phenanthrene	NA				0.010	mg/L	4	U	NA			
Phenol	NA				0.010	mg/L	4	U	NA			
Pronamide	NA				0.030	mg/L	4	U	NA			
Pyrene	NA				0.010	mg/L	4	U	NA			
Safrole	NA				0.010	mg/L	4	U	NA			
Sulfotep	NA				0.010	mg/L	3	U	NA			
a,a-Dimethylphenethylamine	NA				0.010	mg/L	4	R	NA			
bis(2-Chloroethoxy)methane	NA				0.010	mg/L	4	U	NA			
bis(2-Chloroethyl)ether	NA				0.010	mg/L	4	U	NA			
bis(2-Chloroisopropyl) ether	NA				0.010	mg/L	4	UJ	NA			
bis(2-Ethylhexyl) phthalate	NA				0.010	mg/L	4	U	NA			
o-Toluidine	NA				0.010	mg/L	4	U	NA			
p-Chloroaniline	NA				0.010	mg/L	4	U	NA			
p-Dimethylaminoazobenzene	NA				0.030	mg/L	4	U	NA			
p-Phenylenediamine	NA				0.050	mg/L	4	UJ	NA			
Herbicide Organics												
2,4,5-T	NA				0.002	mg/L	4	U	NA			
2,4,5-TP (Silvex)	NA				0.002	mg/L	4	U	NA			
2,4-D	NA				0.010	mg/L	4	U	NA			
Dinoseb	NA				0.001	mg/L	4	U	NA			
Pesticide Organics/PCBs												
4,4'-DDD	NA				0.000	mg/L	4	U	NA			
4,4'-DDE	NA				0.000	mg/L	4	U	NA			
4,4'-DDT	NA				0.000	mg/L	4	U	NA			

000132

TABLE C-17
(Continued)

PHASE I - CHEMICAL PARAMETERS

QC TYPE	T/F BLANK				RINSATE				TRIP BLANK			
SAMPLE NUMBER	067727				067728				067741			
ASSOCIATED SAMPLES	067714, 067717, 067719				067714, 067717, 067719				067740			
SAMPLING DATE	02/23/92				02/24/92				02/25/92			
CHEMICAL PARAMETERS	RESULTS	UNITS	L	VQ	RESULTS	UNITS	L	VQ	RESULTS	UNITS	L	VQ
Pesticide Organics/PCBs												
Aldrin	NA				0.000	mg/L	4	U	NA			
Aroclor-1016	NA				0.001	mg/L	4	U	NA			
Aroclor-1221	NA				0.001	mg/L	4	U	NA			
Aroclor-1232	NA				0.001	mg/L	4	U	NA			
Aroclor-1242	NA				0.001	mg/L	4	U	NA			
Aroclor-1248	NA				0.001	mg/L	4	U	NA			
Aroclor-1254	NA				0.001	mg/L	4	U	NA			
Aroclor-1260	NA				0.001	mg/L	4	U	NA			
Azinphosmethyl	NA				0.000	mg/L	4	U	NA			
Chlorobenzilate	NA				0.000	mg/L	4	U	NA			
Demeton	NA				0.000	mg/L	4	U	NA			
Diazinon	NA				0.000	mg/L	4	U	NA			
Dieldrin	NA				0.000	mg/L	4	U	NA			
Disulfoton	NA				0.000	mg/L	4	U	NA			
Endosulfan II	NA				0.000	mg/L	4	U	NA			
Endosulfan sulfate	NA				0.000	mg/L	4	U	NA			
Endosulfan-I	NA				0.000	mg/L	4	U	NA			
Endrin	NA				0.000	mg/L	4	U	NA			
Endrin ketone	NA				0.000	mg/L	4	U	NA			
Ethion	NA				0.000	mg/L	4	U	NA			
Heptachlor	NA				0.000	mg/L	4	U	NA			
Heptachlor epoxide	NA				0.000	mg/L	4	U	NA			
Isodrin	NA				0.000	mg/L	4	U	NA			
Kepone	NA				0.000	mg/L	4	U	NA			
Malathion	NA				0.000	mg/L	4	U	NA			
Methoxychlor	NA				0.001	mg/L	4	U	NA			
Tetraethylpyrophosphate	NA				0.000	mg/L	4	U	NA			
Toxaphene	NA				0.001	mg/L	4	U	NA			
alpha-BHC	NA				0.000	mg/L	4	U	NA			
alpha-Chlordane	NA				0.001	mg/L	4	U	NA			
beta-BHC	NA				0.000	mg/L	4	U	NA			
delta-BHC	NA				0.000	mg/L	4	U	NA			
gamma-BHC (Lindane)	NA				0.000	mg/L	4	U	NA			
gamma-Chlordane	NA				0.001	mg/L	4	U	NA			
Dioxins/Furans												
1,2,3,4,6,7,8-Heptachlorodibenzo-p-dioxin	NA				0.000	mg/L	5	U	NA			
1,2,3,4,6,7,8-Heptachlorodibenzofuran	NA				0.000	mg/L	5	U	NA			
1,2,3,4,7,8,9-Heptachlorodibenzofuran	NA				0.000	mg/L	5	U	NA			
1,2,3,4,7,8-Hexachlorodibenzo-p-dioxin	NA				0.000	mg/L	5	U	NA			
1,2,3,4,7,8-Hexachlorodibenzofuran	NA				0.000	mg/L	5	U	NA			

TABLE C-17
(Continued)

PHASE I - CHEMICAL PARAMETERS

QC TYPE	T/F BLANK				RINSATE				TRIP BLANK			
SAMPLE NUMBER	067727				067728				067741			
ASSOCIATED SAMPLES	067714, 067717, 067719				067714, 067717, 067719				067740			
SAMPLING DATE	02/23/92				02/24/92				02/25/92			
CHEMICAL PARAMETERS	RESULTS	UNITS	L	VQ	RESULTS	UNITS	L	VQ	RESULTS	UNITS	L	VQ
Dioxins/Furans												
1,2,3,6,7,8-Hexachlorodibenzo-p-dioxin	NA				0.000	mg/L	5	U	NA			
1,2,3,6,7,8-Hexachlorodibenzofuran	NA				0.000	mg/L	5	U	NA			
1,2,3,7,8,9-Hexachlorodibenzo-p-dioxin	NA				0.000	mg/L	5	U	NA			
1,2,3,7,8,9-Hexachlorodibenzofuran	NA				0.000	mg/L	5	U	NA			
1,2,3,7,8-Pentachlorodibenzo-p-dioxin	NA				0.000	mg/L	5	UJ	NA			
1,2,3,7,8-Pentachlorodibenzofuran	NA				0.000	mg/L	5	UJ	NA			
2,3,4,6,7,8-Hexachlorodibenzofuran	NA				0.000	mg/L	5	U	NA			
2,3,4,7,8-Pentachlorodibenzofuran	NA				0.000	mg/L	5	UJ	NA			
2,3,7,8-TCDD	NA				0.000	mg/L	5	U	NA			
2,3,7,8-TCDF	NA				0.000	mg/L	5	U	NA			
Heptachlorodibenzo-p-dioxin	NA				0.000	mg/L	5	U	NA			
Heptachlorodibenzofuran	NA				0.000	mg/L	5	U	NA			
Hexachlorodibenzo-p-dioxin	NA				0.000	mg/L	5	U	NA			
Hexachlorodibenzofuran	NA				0.000	mg/L	5	U	NA			
Octachlorodibenzo-p-dioxin	NA				0.000	mg/L	5	U	NA			
Octachlorodibenzofuran	NA				0.000	mg/L	5	U	NA			
Pentachlorodibenzo-p-dioxin	NA				0.000	mg/L	5	UJ	NA			
Pentachlorodibenzofuran	NA				0.000	mg/L	5	UJ	NA			
Tetrachlorodibenzo-p-dioxin	NA				0.000	mg/L	5	U	NA			
Tetrachlorodibenzofuran	NA				0.000	mg/L	5	U	NA			
General Chemistry												
Total Organic Carbon	NA				1.000	mg/L	3	U	NA			

000434

TABLE C-17
(Continued)

PHASE I - CHEMICAL PARAMETERS

QC TYPE	RINSATE
SAMPLE NUMBER	008125
ASSOCIATED SAMPLES	007968, 008107, 008117
SAMPLING DATE	02/17/88

CHEMICAL PARAMETERS	RESULTS	UNITS	L	VQ
Inorganics				
Aluminum	0.150	mg/L	3	-
Antimony	0.060	mg/L	3	U
Arsenic	0.005	mg/L	3	U
Barium	0.002	mg/L	3	U
Beryllium	0.001	mg/L	3	U
Cadmium	0.005	mg/L	3	U
Calcium	0.500	mg/L	3	-
Chromium	0.020	mg/L	3	U
Cobalt	0.010	mg/L	3	U
Copper	0.043	mg/L	3	U
Cyanide	0.010	mg/L	3	U
Iron	0.005	mg/L	3	U
Lead	0.013	mg/L	3	-
Magnesium	0.100	mg/L	3	-
Manganese	0.001	mg/L	3	U
Mercury	0.000	mg/L	3	U
Nickel	0.020	mg/L	3	U
Potassium	0.040	mg/L	3	U
Selenium	0.002	mg/L	3	U
Silver	0.005	mg/L	3	U
Sodium	0.110	mg/L	3	J
Thallium	0.005	mg/L	3	U
Vanadium	0.031	mg/L	3	-
Zinc	0.184	mg/L	3	U
Volatile Organics				
1,1,1-Trichloroethane	0.005	mg/L	3	U
1,1,2,2-Tetrachloroethane	0.005	mg/L	3	U
1,1,2-Trichloroethane	0.005	mg/L	3	U
1,1-Dichloroethane	0.005	mg/L	3	U
1,1-Dichloroethene	0.005	mg/L	3	U
1,2-Dichloroethane	0.005	mg/L	3	U
1,2-Dichloroethene	0.005	mg/L	3	U
1,2-Dichloropropane	0.005	mg/L	3	U
2-Butanone	0.005	mg/L	3	-
2-Hexanone	0.010	mg/L	3	U
4-Methyl-2-pentanone	0.010	mg/L	3	U
Acetone	0.010	mg/L	3	U
Benzene	0.005	mg/L	3	U
Bromodichloromethane	0.005	mg/L	3	U
Bromoform	0.005	mg/L	3	U

TABLE C-17
(Continued)

PHASE I - CHEMICAL PARAMETERS

QC TYPE	RINSATE			
SAMPLE NUMBER	008125			
ASSOCIATED SAMPLES				
SAMPLING DATE	02/17/88			
CHEMICAL PARAMETERS	RESULTS	UNITS	L	VQ
Volatile Organics				
Bromomethane	0.010	mg/L	3	U
Carbon Tetrachloride	0.005	mg/L	3	U
Carbon disulfide	0.005	mg/L	3	U
Chlorobenzene	0.005	mg/L	3	U
Chloroethane	0.010	mg/L	3	U
Chloroform	0.005	mg/L	3	U
Chloromethane	0.010	mg/L	3	U
Dibromochloromethane	0.005	mg/L	3	U
Ethylbenzene	0.005	mg/L	3	U
Methylene chloride	0.005	mg/L	3	U
Styrene	0.005	mg/L	3	U
Tetrachloroethene	0.005	mg/L	3	U
Toluene	0.005	mg/L	3	U
Trichloroethene	0.005	mg/L	3	U
Vinyl Acetate	0.010	mg/L	3	U
Vinyl chloride	0.010	mg/L	3	U
Xylenes, Total	0.005	mg/L	3	U
cis-1,3-Dichloropropene	0.005	mg/L	3	U
trans-1,3-Dichloropropene	0.005	mg/L	3	U
Semivolatile Organics				
1,2,4-Trichlorobenzene	0.010	mg/L	3	U
1,2-Dichlorobenzene	0.010	mg/L	3	U
1,3-Dichlorobenzene	0.010	mg/L	3	U
1,4-Dichlorobenzene	0.010	mg/L	3	U
2,4,5-Trichlorophenol	0.050	mg/L	3	U
2,4,6-Trichlorophenol	0.010	mg/L	3	U
2,4-Dichlorophenol	0.010	mg/L	3	U
2,4-Dimethylphenol	0.010	mg/L	3	U
2,4-Dinitrophenol	0.050	mg/L	3	U
2,4-Dinitrotoluene	0.010	mg/L	3	U
2,6-Dinitrotoluene	0.010	mg/L	3	U
2-Chloronaphthalene	0.010	mg/L	3	U
2-Chlorophenol	0.010	mg/L	3	U
2-Methylnaphthalene	0.010	mg/L	3	U
2-Methylphenol	0.010	mg/L	3	U
2-Nitroaniline	0.050	mg/L	3	U
2-Nitrophenol	0.010	mg/L	3	U
3,3'-Dichlorobenzidine	0.020	mg/L	3	U
3-Nitroaniline	0.050	mg/L	3	U
4,6-Dinitro-2-methylphenol	0.050	mg/L	3	U

TABLE C-17
(Continued)

PHASE I - CHEMICAL PARAMETERS

QC TYPE	RINSATE			
SAMPLE NUMBER	008125			
ASSOCIATED SAMPLES				
SAMPLING DATE	02/17/88			
CHEMICAL PARAMETERS	RESULTS	UNITS	L	VQ
Semivolatile Organics				
4-Bromophenyl phenyl ether	0.010	mg/L	3	U
4-Chloro-3-methylphenol	0.010	mg/L	3	U
4-Chlorophenylphenyl ether	0.010	mg/L	3	U
4-Methylphenol	0.010	mg/L	3	U
4-Nitroaniline	0.050	mg/L	3	U
4-Nitrophenol	0.050	mg/L	3	U
Acenaphthene	0.010	mg/L	3	U
Acenaphthylene	0.010	mg/L	3	U
Anthracene	0.010	mg/L	3	U
Benzo(a)anthracene	0.010	mg/L	3	U
Benzo(a)pyrene	0.010	mg/L	3	U
Benzo(b)fluoranthene	0.010	mg/L	3	U
Benzo(g,h,i)perylene	0.010	mg/L	3	U
Benzo(k)fluoranthene	0.010	mg/L	3	U
Benzoic acid	0.050	mg/L	3	U
Benzyl alcohol	0.010	mg/L	3	U
Butyl benzyl phthalate	0.010	mg/L	3	U
Chrysene	0.010	mg/L	3	U
Di-n-butyl phthalate	0.010	mg/L	3	U
Di-n-octyl phthalate	0.010	mg/L	3	U
Dibenzo(a,h)anthracene	0.010	mg/L	3	U
Dibenzofuran	0.010	mg/L	3	U
Diethyl phthalate	0.002	mg/L	3	-
Dimethyl phthalate	0.010	mg/L	3	U
Fluoranthene	0.010	mg/L	3	U
Fluorene	0.010	mg/L	3	U
Hexachlorobenzene	0.010	mg/L	3	U
Hexachlorobutadiene	0.010	mg/L	3	U
Hexachlorocyclopentadiene	0.010	mg/L	3	U
Hexachloroethane	0.010	mg/L	3	U
Indeno(1,2,3-cd)pyrene	0.010	mg/L	3	U
Isophorone	0.010	mg/L	3	U
N-Nitroso-di-n-propylamine	0.010	mg/L	3	U
N-Nitrosodiphenylamine	0.010	mg/L	3	U
Naphthalene	0.010	mg/L	3	U
Nitrobenzene	0.010	mg/L	3	U
Pentachlorophenol	0.050	mg/L	3	U
Phenanthrene	0.010	mg/L	3	U
Phenol	0.010	mg/L	3	U
Pyrene	0.010	mg/L	3	U
bis(2-Chloroethoxy)methane	0.010	mg/L	3	U
bis(2-Chloroethyl)ether	0.010	mg/L	3	U

TABLE C-17
(Continued)

PHASE I - CHEMICAL PARAMETERS

QC TYPE	RINSATE			
SAMPLE NUMBER	008125			
ASSOCIATED SAMPLES				
SAMPLING DATE	02/17/88			
CHEMICAL PARAMETERS	RESULTS	UNITS	L	VQ
Semivolatile Organics				
bis(2-Chloroisopropyl) ether	0.010	mg/L	3	U
bis(2-Ethylhexyl) phthalate	0.023	mg/L	3	U
p-Chloroaniline	0.010	mg/L	3	U
Pesticide Organics/PCBs				
4,4'-DDD	0.000	mg/L	3	U
4,4'-DDE	0.000	mg/L	3	U
4,4'-DDT	0.000	mg/L	3	U
Aldrin	0.000	mg/L	3	U
Aroclor-1016	0.001	mg/L	3	U
Aroclor-1221	0.001	mg/L	3	U
Aroclor-1232	0.001	mg/L	3	U
Aroclor-1242	0.001	mg/L	3	U
Aroclor-1248	0.001	mg/L	3	U
Aroclor-1254	0.001	mg/L	3	U
Aroclor-1260	0.001	mg/L	3	U
Dieldrin	0.000	mg/L	3	U
Endosulfan II	0.000	mg/L	3	U
Endosulfan sulfate	0.000	mg/L	3	U
Endosulfan-I	0.000	mg/L	3	U
Endrin	0.000	mg/L	3	U
Endrin ketone	0.000	mg/L	3	U
Heptachlor	0.000	mg/L	3	U
Heptachlor epoxide	0.000	mg/L	3	U
Methoxychlor	0.001	mg/L	3	U
Toxaphene	0.001	mg/L	3	U
alpha-BHC	0.000	mg/L	3	U
alpha-Chlordane	0.001	mg/L	3	U
beta-BHC	0.000	mg/L	3	U
delta-BHC	0.000	mg/L	3	U
gamma-BHC (Lindane)	0.000	mg/L	3	U
gamma-Chlordane	0.001	mg/L	3	U
General Chemistry				
Chloride	0.500	mg/L	3	U
Fluoride	0.100	mg/L	3	U
Hexavalent Chromium	0.010	mg/L	3	U
Nitrate	0.100	mg/L	3	U
Phenols	0.010	mg/L	3	U
Sulfate	2.500	mg/L	3	-

000438

TABLE C-17
(Continued)

PHASE II - RADIOLOGICAL PARAMETERS

QA TYPE	FIELD BLANK			FIELD BLANK			RINSATE		
SAMPLE NUMBER	111331			115486			111501		
ASSOCIATED SAMPLES	111333			115480			111492		
SAMPLING DATE	04/08/93			06/08/93			05/20/93		
RADIOLOGICAL PARAMETERS	RESULTS	UNITS	VQ	RESULTS	UNITS	VQ	RESULTS	UNITS	VQ
CS-137	20.000	pci/L	*	14.200	pci/L	UJ	13.700	pci/L	UJ
GROSS ALPHA	4.000	pci/L	*	0.455	pci/L	UJ	0.496	pci/L	UJ
GROSS BETA	4.000	pci/L	*	0.966	pci/L	UJ	1.090	pci/L	UJ
NP-237	1.000	pci/L	*	1.660	pci/L	N	0.203	pci/L	U
PU-238	0.091	pci/L	J	0.121	pci/L	UJ	0.028	pci/L	UJ
PU-239/240	1.000	pci/L	*	0.571	pci/L	J	0.065	pci/L	UJ
RA-226	0.051	pci/L	J	0.310	pci/L	UJ	0.126	pci/L	UJ
RA-228	1.100	pci/L	UJ	3.150	pci/L	UJ	1.500	pci/L	UJ
RU-106	110.000	pci/L	*	160.000	pci/L	UJ	130.000	pci/L	UJ
SR-90	5.000	pci/L	*	0.819	pci/L	UJ	0.751	pci/L	UJ
TC-99	12.500	pci/L	UJ	11.800	pci/L	UJ	1.070	pci/L	UJ
TH-228	1.000	pci/L	*	0.238	pci/L	UJ	0.686	pci/L	J
TH-230	1.000	pci/L	*	0.166	pci/L	J	0.351	pci/L	UJ
TH-232	0.233	pci/L	UJ	0.156	pci/L	UJ	0.538	pci/L	J
TH-TOTAL	2.140	ug/L	UJ	1.440	ug/L	UJ	4.950	ug/L	J
U-234	0.109	pci/L	J	0.156	pci/L	J	0.081	pci/L	UJ
U-235/236	1.000	pci/L	*	0.125	pci/L	UJ	0.100	pci/L	UJ
U-238	0.033	pci/L	J	0.083	pci/L	UJ	0.081	pci/L	UJ
U-TOTAL	5.000	ug/L	*	1.000	ug/L	U	1.000	ug/L	UJ

TABLE C-17
(Continued)

PHASE II - RADIOLOGICAL PARAMETERS

QA TYPE	RINSATE
SAMPLE NUMBER	115399
ASSOCIATED SAMPLES	116427
SAMPLING DATE	05/25/93

RADIOLOGICAL PARAMETERS	RESULTS	UNITS	VQ
CS-137	14.200	pci/L	UJ
GROSS ALPHA	0.433	pci/L	UJ
GROSS BETA	0.976	pci/L	UJ
NP-237	0.527	pci/L	U
PU-238	0.057	pci/L	UJ
PU-239/240	0.160	pci/L	J
RA-226	0.244	pci/L	UJ
RA-228	1.750	pci/L	UJ
RU-106	134.000	pci/L	UJ
SR-90	1.510	pci/L	J
TC-99	10.900	pci/L	UJ
TH-228	0.316	pci/L	UJ
TH-230	0.332	pci/L	J
TH-232	0.207	pci/L	UJ
TH-TOTAL	1.900	ug/L	UJ
U-234	0.114	pci/L	UJ
U-235/236	0.102	pci/L	UJ
U-238	0.114	pci/L	UJ
U-TOTAL	0.077	ug/L	J

TABLE C-17
(Continued)

PHASE II - CHEMICAL PARAMETERS

QA TYPE	11039				1992				1993			
SAMPLE NUMBER	115387				115347				115341			
ASSOCIATED SAMPLES	115384, 115385, 115389, 115390				115343, 115346, 115345				115339, 115340			
SAMPLING DATE	05/19/93				05/11/93				05/11/93			
CHEMICAL PARAMETERS	RESULTS	UNITS	L	VQ	RESULTS	UNITS	L	VQ	RESULTS	UNITS	L	VQ
Volatile Organics												
1,1,1-Trichloroethane	0.010	mg/L	C	U	0.010	mg/L	C	U	0.010	mg/L	C	U
1,1,2,2-Tetrachloroethane	0.010	mg/L	C	U	0.010	mg/L	C	U	0.010	mg/L	C	U
1,1,2-Trichloroethane	0.010	mg/L	C	U	0.010	mg/L	C	U	0.010	mg/L	C	U
1,1-Dichloroethane	0.010	mg/L	C	U	0.010	mg/L	C	U	0.010	mg/L	C	U
1,1-Dichloroethene	0.010	mg/L	C	U	0.010	mg/L	C	U	0.010	mg/L	C	U
1,2-Dichloroethane	0.010	mg/L	C	U	0.010	mg/L	C	U	0.010	mg/L	C	U
1,2-Dichloroethene	0.010	mg/L	C	U	0.010	mg/L	C	U	0.010	mg/L	C	U
1,2-Dichloropropane	0.010	mg/L	C	U	0.010	mg/L	C	U	0.010	mg/L	C	U
2-Butanone	0.004	mg/L	C	J	0.010	mg/L	C	U	0.010	mg/L	C	U
2-Hexanone	0.010	mg/L	C	UJ	0.010	mg/L	C	UJ	0.010	mg/L	C	U
4-Methyl-2-pentanone	0.010	mg/L	C	UJ	0.010	mg/L	C	U	0.010	mg/L	C	U
Acetone	0.002	mg/L	C	J	0.007	mg/L	C	R	0.010	mg/L	C	U
Benzene	0.010	mg/L	C	U	0.010	mg/L	C	U	0.010	mg/L	C	U
Bromodichloromethane	0.010	mg/L	C	U	0.010	mg/L	C	U	0.010	mg/L	C	U
Bromoform	0.010	mg/L	C	U	0.010	mg/L	C	U	0.010	mg/L	C	U
Bromomethane	0.010	mg/L	C	U	0.010	mg/L	C	U	0.010	mg/L	C	U
Carbon Tetrachloride	0.010	mg/L	C	U	0.010	mg/L	C	U	0.010	mg/L	C	U
Carbon disulfide	0.010	mg/L	C	U	0.010	mg/L	C	U	0.010	mg/L	C	U
Chlorobenzene	0.010	mg/L	C	U	0.010	mg/L	C	U	0.010	mg/L	C	U
Chloroethane	0.010	mg/L	C	U	0.010	mg/L	C	U	0.010	mg/L	C	U
Chloroform	0.010	mg/L	C	U	0.010	mg/L	C	U	0.010	mg/L	C	U
Chloromethane	0.010	mg/L	C	U	0.010	mg/L	C	U	0.010	mg/L	C	U
Dibromochloromethane	0.010	mg/L	C	U	0.010	mg/L	C	U	0.010	mg/L	C	U
Ethylbenzene	0.010	mg/L	C	U	0.010	mg/L	C	U	0.010	mg/L	C	U
Methylene chloride	0.010	mg/L	C	UJ	0.010	mg/L	C	U	0.010	mg/L	C	U
Styrene	0.010	mg/L	C	U	0.010	mg/L	C	U	0.010	mg/L	C	U
Tetrachloroethene	0.010	mg/L	C	U	0.010	mg/L	C	U	0.010	mg/L	C	U
Toluene	0.010	mg/L	C	U	0.010	mg/L	C	U	0.010	mg/L	C	U
Trichloroethene	0.010	mg/L	C	U	0.010	mg/L	C	U	0.010	mg/L	C	U
Vinyl Acetate	0.010	mg/L	C	UJ	NA				0.010	mg/L	C	U
Vinyl chloride	0.010	mg/L	C	U	0.010	mg/L	C	U	0.010	mg/L	C	U
Xylenes, Total	0.010	mg/L	C	U	0.010	mg/L	C	U	0.010	mg/L	C	U
cis-1,3-Dichloropropene	0.010	mg/L	C	U	0.010	mg/L	C	U	0.010	mg/L	C	U
trans-1,3-Dichloropropene	0.010	mg/L	C	U	0.010	mg/L	C	U	0.010	mg/L	C	U

TABLE C-17
(Continued)

PHASE II - CHEMICAL PARAMETERS

QA TYPE	FIELD BLANK				FIELD BLANK				FIELD BLANK			
SAMPLE NUMBER	111331				115472				115486			
ASSOCIATED SAMPLES	111333				115468, 115470, 115480				115480			
SAMPLING DATE	04/08/93				05/15/93				06/08/93			
CHEMICAL PARAMETERS	RESULTS	UNITS	L	VQ	RESULTS	UNITS	L	VQ	RESULTS	UNITS	L	VQ
Inorganics												
Aluminum	0.030	mg/L	C	U	NA				0.045	mg/L	C	-
Antimony	0.005	mg/L	C	U	NA				0.059	mg/L	C	U
Arsenic	0.002	mg/L	C	U	NA				0.001	mg/L	C	U
Barium	0.002	mg/L	C	U	NA				0.002	mg/L	C	U
Beryllium	0.002	mg/L	C	U	NA				0.000	mg/L	C	U
Cadmium	0.005	mg/L	C	U	NA				0.003	mg/L	C	U
Calcium	0.043	mg/L	C	-	NA				0.049	mg/L	C	U
Chromium	0.010	mg/L	C	U	NA				0.005	mg/L	C	U
Cobalt	0.010	mg/L	C	U	NA				0.004	mg/L	C	U
Copper	0.010	mg/L	C	U	NA				0.005	mg/L	C	U
Cyanide	0.002	mg/L	C	U	NA				0.002	mg/L	C	U
Iron	0.020	mg/L	C	U	NA				0.025	mg/L	C	U
Lead	0.002	mg/L	C	U	NA				0.003	mg/L	C	U
Magnesium	0.050	mg/L	C	U	NA				0.047	mg/L	C	U
Manganese	0.010	mg/L	C	U	NA				0.001	mg/L	C	U
Mercury	0.000	mg/L	C	U	NA				0.000	mg/L	C	U
Molybdenum	0.020	mg/L	C	U	NA				0.007	mg/L	C	U
Nickel	0.020	mg/L	C	U	NA				0.021	mg/L	C	U
Potassium	0.100	mg/L	C	U	NA				2.980	mg/L	C	U
Selenium	0.002	mg/L	C	U	NA				0.001	mg/L	C	U
Silicon	0.157	mg/L	C	-	NA				0.047	mg/L	C	U
Silver	0.010	mg/L	C	U	NA				0.006	mg/L	C	U
Sodium	0.100	mg/L	C	U	NA				0.038	mg/L	C	U
Thallium	0.002	mg/L	C	U	NA				0.001	mg/L	C	U
Vanadium	0.010	mg/L	C	U	NA				0.003	mg/L	C	U
Zinc	0.008	mg/L	C	-	NA				0.008	mg/L	C	U
Volatile Organics												
1,1,1-Trichloroethane	0.010	mg/L	C	U	0.010	mg/L	C	U	0.010	mg/L	C	U
1,1,2,2-Tetrachloroethane	0.010	mg/L	C	U	0.010	mg/L	C	U	0.010	mg/L	C	U
1,1,2-Trichloroethane	0.010	mg/L	C	U	0.010	mg/L	C	U	0.010	mg/L	C	U
1,1-Dichloroethane	0.010	mg/L	C	U	0.010	mg/L	C	U	0.010	mg/L	C	U
1,1-Dichloroethene	0.010	mg/L	C	U	0.010	mg/L	C	U	0.010	mg/L	C	U
1,2-Dichloroethane	0.010	mg/L	C	U	0.010	mg/L	C	U	0.010	mg/L	C	U
1,2-Dichloroethene	0.010	mg/L	C	U	0.010	mg/L	C	U	0.010	mg/L	C	U
1,2-Dichloropropane	0.010	mg/L	C	U	0.010	mg/L	C	U	0.010	mg/L	C	U
2-Butanone	0.010	mg/L	C	U	0.010	mg/L	C	UJ	0.010	mg/L	C	U
2-Hexanone	0.010	mg/L	C	U	0.010	mg/L	C	U	0.010	mg/L	C	UJ
4-Methyl-2-pentanone	0.010	mg/L	C	U	0.010	mg/L	C	UJ	0.010	mg/L	C	U
Acetone	0.010	mg/L	C	U	0.010	mg/L	C	UJ	0.010	mg/L	C	UJ
Benzene	0.010	mg/L	C	U	0.010	mg/L	C	U	0.010	mg/L	C	U

000442

TABLE C-17
(Continued)

PHASE II - CHEMICAL PARAMETERS

QA TYPE	FIELD BLANK				FIELD BLANK				FIELD BLANK			
SAMPLE NUMBER	111331				115472				115486			
ASSOCIATED SAMPLES	111333				115468, 115470, 115471				115480			
SAMPLING DATE	04/08/93				05/15/93				06/08/93			
CHEMICAL PARAMETERS	RESULTS	UNITS	L	VQ	RESULTS	UNITS	L	VQ	RESULTS	UNITS	L	VQ
Volatile Organics												
Bromodichloromethane	0.010	mg/L	C	U	0.010	mg/L	C	U	0.010	mg/L	C	U
Bromoform	0.010	mg/L	C	U	0.010	mg/L	C	U	0.010	mg/L	C	U
Bromomethane	0.010	mg/L	C	UJ	0.010	mg/L	C	U	0.010	mg/L	C	UJ
Carbon Tetrachloride	0.010	mg/L	C	UJ	0.010	mg/L	C	U	0.010	mg/L	C	U
Carbon disulfide	0.010	mg/L	C	U	0.010	mg/L	C	U	0.010	mg/L	C	U
Chlorobenzene	0.010	mg/L	C	U	0.010	mg/L	C	U	0.010	mg/L	C	U
Chloroethane	0.010	mg/L	C	U	0.010	mg/L	C	UJ	0.010	mg/L	C	UJ
Chloroform	0.003	mg/L	C	-	0.005	mg/L	C	J	0.010	mg/L	C	U
Chloromethane	0.010	mg/L	C	U	0.010	mg/L	C	U	0.010	mg/L	C	UJ
Dibromochloromethane	0.010	mg/L	C	U	0.010	mg/L	C	U	0.010	mg/L	C	U
Ethylbenzene	0.010	mg/L	C	U	0.010	mg/L	C	U	0.010	mg/L	C	U
Methylene chloride	0.010	mg/L	C	U	0.011	mg/L	C	UJ	0.010	mg/L	C	U
Styrene	0.010	mg/L	C	U	0.010	mg/L	C	U	0.010	mg/L	C	U
Tetrachloroethene	0.010	mg/L	C	U	0.010	mg/L	C	U	0.010	mg/L	C	U
Toluene	0.010	mg/L	C	U	0.010	mg/L	C	U	0.010	mg/L	C	U
Trichloroethene	0.010	mg/L	C	U	0.010	mg/L	C	U	0.010	mg/L	C	U
Vinyl Acetate	0.010	mg/L	C	U	0.010	mg/L	C	UJ	0.010	mg/L	C	U
Vinyl chloride	0.010	mg/L	C	U	0.010	mg/L	C	UJ	0.010	mg/L	C	U
Xylenes, Total	0.010	mg/L	C	U	0.010	mg/L	C	U	0.010	mg/L	C	U
cis-1,3-Dichloropropene	0.010	mg/L	C	U	0.010	mg/L	C	U	0.010	mg/L	C	U
trans-1,3-Dichloropropene	0.010	mg/L	C	U	0.010	mg/L	C	U	0.010	mg/L	C	U
Semivolatile Organics												
1,2,4-Trichlorobenzene	0.010	mg/L	C	UJ	NA				0.010	mg/L	C	U
1,2-Dichlorobenzene	0.010	mg/L	C	U	NA				0.010	mg/L	C	U
1,3-Dichlorobenzene	0.010	mg/L	C	U	NA				0.010	mg/L	C	U
1,4-Dichlorobenzene	0.010	mg/L	C	U	NA				0.010	mg/L	C	U
2,4,5-Trichlorophenol	0.025	mg/L	C	U	NA				0.025	mg/L	C	U
2,4,6-Trichlorophenol	0.010	mg/L	C	U	NA				0.010	mg/L	C	U
2,4-Dichlorophenol	0.010	mg/L	C	U	NA				0.010	mg/L	C	U
2,4-Dimethylphenol	0.010	mg/L	C	U	NA				0.010	mg/L	C	U
2,4-Dinitrophenol	0.025	mg/L	C	U	NA				0.025	mg/L	C	R
2,4-Dinitrotoluene	0.010	mg/L	C	U	NA				0.010	mg/L	C	U
2,6-Dinitrotoluene	0.010	mg/L	C	U	NA				0.010	mg/L	C	U
2-Benzyl-4-chlorophenol	NA				NA				0.010	mg/L	C	UJ
2-Chloronaphthalene	0.010	mg/L	C	U	NA				0.010	mg/L	C	U
2-Chlorophenol	0.010	mg/L	C	U	NA				0.010	mg/L	C	U
2-Methylnaphthalene	0.010	mg/L	C	U	NA				0.010	mg/L	C	U
2-Methylphenol	0.010	mg/L	C	U	NA				0.010	mg/L	C	U
2-Nitroaniline	0.025	mg/L	C	UJ	NA				0.025	mg/L	C	U
2-Nitrophenol	0.010	mg/L	C	U	NA				0.010	mg/L	C	U

TABLE C-17
(Continued)

PHASE II - CHEMICAL PARAMETERS

QA TYPE	FIELD BLANK				FIELD BLANK				FIELD BLANK			
SAMPLE NUMBER	111331				115472				115486			
ASSOCIATED SAMPLES	111333				115468, 115470, 115471				115480			
SAMPLING DATE	04/08/93				05/15/93				06/08/93			
CHEMICAL PARAMETERS	RESULTS	UNITS	L	VQ	RESULTS	UNITS	L	VQ	RESULTS	UNITS	L	VQ
Semivolatile Organics												
3,3'-Dichlorobenzidine	0.010	mg/L	C	UJ	NA				0.010	mg/L	C	U
3-Nitroaniline	0.025	mg/L	C	UJ	NA				0.025	mg/L	C	U
4,6-Dinitro-2-methylphenol	0.025	mg/L	C	U	NA				0.025	mg/L	C	UJ
4-Bromophenyl phenyl ether	0.010	mg/L	C	U	NA				0.010	mg/L	C	U
4-Chloro-3-methylphenol	0.010	mg/L	C	U	NA				0.010	mg/L	C	U
4-Chlorophenylphenyl ether	0.010	mg/L	C	U	NA				0.010	mg/L	C	U
4-Methylphenol	0.010	mg/L	C	UJ	NA				0.010	mg/L	C	U
4-Nitroaniline	0.025	mg/L	C	UJ	NA				0.025	mg/L	C	U
4-Nitrophenol	0.025	mg/L	C	UJ	NA				0.025	mg/L	C	UJ
Acenaphthene	0.010	mg/L	C	U	NA				0.010	mg/L	C	U
Acenaphthylene	0.010	mg/L	C	U	NA				0.010	mg/L	C	U
Anthracene	0.010	mg/L	C	U	NA				0.010	mg/L	C	U
Benzo(a)anthracene	0.010	mg/L	C	U	NA				0.010	mg/L	C	U
Benzo(a)pyrene	0.010	mg/L	C	U	NA				0.010	mg/L	C	U
Benzo(b)fluoranthene	0.010	mg/L	C	U	NA				0.010	mg/L	C	U
Benzo(g,h,i)perylene	0.010	mg/L	C	U	NA				0.010	mg/L	C	U
Benzo(k)fluoranthene	0.010	mg/L	C	UJ	NA				0.010	mg/L	C	U
Benzoic acid	0.050	mg/L	C	U	NA				0.050	mg/L	C	UJ
Benzyl alcohol	0.010	mg/L	C	U	NA				0.010	mg/L	C	UJ
Butyl benzyl phthalate	0.010	mg/L	C	U	NA				0.010	mg/L	C	U
Carbazole	0.010	mg/L	C	U	NA				0.010	mg/L	C	U
Chrysene	0.010	mg/L	C	U	NA				0.010	mg/L	C	U
Di-n-butyl phthalate	0.010	mg/L	C	U	NA				0.010	mg/L	C	U
Di-n-octyl phthalate	0.010	mg/L	C	U	NA				0.010	mg/L	C	U
Dibenzo(a,h)anthracene	0.010	mg/L	C	U	NA				0.010	mg/L	C	U
Dibenzofuran	0.010	mg/L	C	U	NA				0.010	mg/L	C	U
Diethyl phthalate	0.010	mg/L	C	U	NA				0.010	mg/L	C	U
Dimethyl phthalate	0.010	mg/L	C	U	NA				0.010	mg/L	C	U
Fluoranthene	0.010	mg/L	C	U	NA				0.010	mg/L	C	U
Fluorene	0.010	mg/L	C	U	NA				0.010	mg/L	C	U
Hexachlorobenzene	0.010	mg/L	C	U	NA				0.010	mg/L	C	U
Hexachlorobutadiene	0.010	mg/L	C	R	NA				0.010	mg/L	C	U
Hexachlorocyclopentadiene	0.010	mg/L	C	U	NA				0.010	mg/L	C	U
Hexachloroethane	0.010	mg/L	C	U	NA				0.010	mg/L	C	U
Indeno(1,2,3-cd)pyrene	0.010	mg/L	C	U	NA				0.010	mg/L	C	U
Isophorone	0.010	mg/L	C	U	NA				0.010	mg/L	C	U
N-Nitroso-di-n-propylamine	0.010	mg/L	C	U	NA				0.010	mg/L	C	U
N-Nitrosodimethylamine	NA				NA				0.010	mg/L	C	U
N-Nitrosodiphenylamine	0.010	mg/L	C	U	NA				0.010	mg/L	C	U
Naphthalene	0.010	mg/L	C	U	NA				0.010	mg/L	C	U
Nitrobenzene	0.010	mg/L	C	U	NA				0.010	mg/L	C	U
Pentachlorophenol	0.025	mg/L	C	U	NA				0.025	mg/L	C	UJ

TABLE C-17
(Continued)

PHASE II - CHEMICAL PARAMETERS

QA TYPE	FIELD BLANK				FIELD BLANK				FIELD BLANK			
SAMPLE NUMBER	111331				115472				115486			
ASSOCIATED SAMPLES	111333				115468, 115470, 115471				115480			
SAMPLING DATE	04/08/93				05/15/93				06/08/93			
CHEMICAL PARAMETERS	RESULTS	UNITS	L	VQ	RESULTS	UNITS	L	VQ	RESULTS	UNITS	L	VQ
Semivolatile Organics												
Phenanthrene	0.010	mg/L	C	U	NA				0.010	mg/L	C	U
Phenol	0.010	mg/L	C	U	NA				0.010	mg/L	C	U
Pyrene	0.010	mg/L	C	U	NA				0.010	mg/L	C	U
Tributyl phosphate	NA				NA				0.010	mg/L	C	U
bis(2-Chloroethoxy)methane	0.010	mg/L	C	U	NA				0.010	mg/L	C	U
bis(2-Chloroethyl)ether	0.010	mg/L	C	U	NA				0.010	mg/L	C	U
bis(2-Chloroisopropyl) ether	0.010	mg/L	C	UJ	NA				0.010	mg/L	C	U
bis(2-Ethylhexyl) phthalate	0.010	mg/L	C	U	NA				0.010	mg/L	C	U
p-Chloroaniline	0.010	mg/L	C	UJ	NA				0.010	mg/L	C	U
Pesticide Organics/PCBs												
4,4'-DDD	0.000	mg/L	C	UJ	NA				0.000	mg/L	C	U
4,4'-DDE	0.000	mg/L	C	U	NA				0.000	mg/L	C	U
4,4'-DDT	0.000	mg/L	C	U	NA				0.000	mg/L	C	U
Aldrin	0.000	mg/L	C	U	NA				0.000	mg/L	C	U
Aroclor-1016	0.001	mg/L	C	U	NA				0.001	mg/L	C	U
Aroclor-1221	0.002	mg/L	C	U	NA				0.002	mg/L	C	U
Aroclor-1232	0.001	mg/L	C	U	NA				0.001	mg/L	C	U
Aroclor-1242	0.001	mg/L	C	U	NA				0.001	mg/L	C	U
Aroclor-1248	0.001	mg/L	C	U	NA				0.001	mg/L	C	U
Aroclor-1254	0.001	mg/L	C	U	NA				0.001	mg/L	C	U
Aroclor-1260	0.001	mg/L	C	U	NA				0.001	mg/L	C	U
Dieldrin	0.000	mg/L	C	U	NA				0.000	mg/L	C	U
Endosulfan II	0.000	mg/L	C	U	NA				0.000	mg/L	C	U
Endosulfan sulfate	0.000	mg/L	C	U	NA				0.000	mg/L	C	U
Endosulfan-I	0.000	mg/L	C	U	NA				0.000	mg/L	C	U
Endrin	0.000	mg/L	C	U	NA				0.000	mg/L	C	U
Endrin aldehyde	0.000	mg/L	C	U	NA				0.000	mg/L	C	U
Endrin ketone	0.000	mg/L	C	U	NA				0.000	mg/L	C	U
Heptachlor	0.000	mg/L	C	U	NA				0.000	mg/L	C	U
Heptachlor epoxide	0.000	mg/L	C	U	NA				0.000	mg/L	C	U
Methoxychlor	0.001	mg/L	C	U	NA				0.001	mg/L	C	U
Toxaphene	0.005	mg/L	C	U	NA				0.005	mg/L	C	U
alpha-BHC	0.000	mg/L	C	U	NA				0.000	mg/L	C	U
alpha-Chlordane	0.000	mg/L	C	U	NA				0.000	mg/L	C	U
beta-BHC	0.000	mg/L	C	U	NA				0.000	mg/L	C	U
delta-BHC	0.000	mg/L	C	U	NA				0.000	mg/L	C	U
gamma-BHC (Lindane)	0.000	mg/L	C	U	NA				0.000	mg/L	C	U
gamma-Chlordane	0.000	mg/L	C	U	NA				0.000	mg/L	C	U
General Chemistry												
Alkalinity	1.000	mg/L	B	U	NA				2.200	mg/L	B	U

TABLE C-17
(Continued)

PHASE II - CHEMICAL PARAMETERS

QA TYPE	FIELD BLANK				FIELD BLANK				FIELD BLANK			
SAMPLE NUMBER	111331				115472				115486			
ASSOCIATED SAMPLES	111333				115468, 115470, 115471				115480			
SAMPLING DATE	04/08/93				05/15/93				06/08/93			
CHEMICAL PARAMETERS	RESULTS	UNITS	L	VQ	RESULTS	UNITS	L	VQ	RESULTS	UNITS	L	VQ
General Chemistry												
Ammonia	0.100	mg/L	B	U	NA				0.100	mg/L	B	U
Chloride	0.500	mg/L	B	U	NA				0.500	mg/L	B	U
Fluoride	0.050	mg/L	B	U	NA				0.050	mg/L	B	U
Nitrate	0.100	mg/L	B	R	NA				0.100	mg/L	B	R
Phenols	0.010	mg/L	B	U	NA				0.010	mg/L	B	U
Sulfate	2.000	mg/L	B	U	NA				2.000	mg/L	B	U
Sulfide	0.500	mg/L	B	U	NA				2.440	mg/L	B	-
Total Kjeldahl Nitrogen	0.100	mg/L	B	U	NA				0.100	mg/L	B	U
Total Organic Carbon	1.000	mg/L	B	U	NA				1.000	mg/L	B	U
Total Organic Halides	0.010	mg/L	B	U	NA				0.010	mg/L	B	U
Total Organic Nitrogen	0.100	mg/L	B	U	NA				0.100	mg/L	B	U
Total Phosphorous	0.020	mg/L	B	U	NA				0.020	mg/L	B	U

TABLE C-17
(Continued)

PHASE II - CHEMICAL PARAMETERS

QA TYPE	RINSATE				RINSATE				TRIP BLANK			
SAMPLE NUMBER	111501				115399				111294			
ASSOCIATED SAMPLES	111492				116427				111289			
SAMPLING DATE	05/20/93				05/25/93				04/07/93			
CHEMICAL PARAMETERS	RESULTS	UNITS	L	VQ	RESULTS	UNITS	L	VQ	RESULTS	UNITS	L	VQ
Inorganics												
Aluminum	0.068	mg/L	C	U	0.104	mg/L	C	U	NA			
Antimony	0.005	mg/L	C	U	0.005	mg/L	C	U	NA			
Arsenic	0.002	mg/L	C	U	0.002	mg/L	C	U	NA			
Barium	0.002	mg/L	C	U	0.002	mg/L	C	U	NA			
Beryllium	0.002	mg/L	C	U	0.002	mg/L	C	U	NA			
Cadmium	0.005	mg/L	C	U	0.005	mg/L	C	U	NA			
Calcium	0.036	mg/L	C	J	0.020	mg/L	C	-	NA			
Chromium	0.010	mg/L	C	U	0.010	mg/L	C	U	NA			
Cobalt	0.010	mg/L	C	U	0.010	mg/L	C	U	NA			
Copper	0.010	mg/L	C	U	0.010	mg/L	C	U	NA			
Cyanide	0.002	mg/L	C	UJ	0.002	mg/L	C	UJ	NA			
Iron	0.020	mg/L	C	U	0.020	mg/L	C	-	NA			
Lead	0.002	mg/L	C	UJ	0.002	mg/L	C	U	NA			
Magnesium	0.050	mg/L	C	U	0.050	mg/L	C	U	NA			
Manganese	0.010	mg/L	C	U	0.010	mg/L	C	U	NA			
Mercury	0.000	mg/L	C	U	0.000	mg/L	C	U	NA			
Molybdenum	0.020	mg/L	C	U	0.010	mg/L	C	U	NA			
Nickel	0.020	mg/L	C	U	0.020	mg/L	C	U	NA			
Potassium	0.100	mg/L	C	U	0.100	mg/L	C	U	NA			
Selenium	0.002	mg/L	C	UJ	0.002	mg/L	C	U	NA			
Silicon	0.109	mg/L	C	-	0.228	mg/L	C	U	NA			
Silver	0.010	mg/L	C	U	0.010	mg/L	C	U	NA			
Sodium	0.100	mg/L	C	U	0.717	mg/L	C	-	NA			
Thallium	0.002	mg/L	C	UJ	0.002	mg/L	C	U	NA			
Vanadium	0.010	mg/L	C	U	0.010	mg/L	C	U	NA			
Zinc	0.005	mg/L	C	U	0.005	mg/L	C	U	NA			
Volatile Organics												
1,1,1-Trichloroethane	0.010	mg/L	C	U	0.010	mg/L	C	U	0.010	mg/L	C	U
1,1,2,2-Tetrachloroethane	0.010	mg/L	C	U	0.010	mg/L	C	U	0.010	mg/L	C	U
1,1,2-Trichloroethane	0.010	mg/L	C	U	0.010	mg/L	C	U	0.010	mg/L	C	U
1,1-Dichloroethane	0.010	mg/L	C	U	0.010	mg/L	C	U	0.010	mg/L	C	U
1,1-Dichloroethene	0.010	mg/L	C	U	0.010	mg/L	C	U	0.010	mg/L	C	U
1,2-Dichloroethane	0.010	mg/L	C	U	0.010	mg/L	C	U	0.010	mg/L	C	U
1,2-Dichloroethene	0.010	mg/L	C	U	0.010	mg/L	C	U	0.010	mg/L	C	U
1,2-Dichloropropane	0.010	mg/L	C	U	0.010	mg/L	C	U	0.010	mg/L	C	U
2-Butanone	0.010	mg/L	C	U	0.010	mg/L	C	U	0.010	mg/L	C	U
2-Hexanone	0.010	mg/L	C	UJ	0.010	mg/L	C	U	0.010	mg/L	C	U
4-Methyl-2-pentanone	0.010	mg/L	C	UJ	0.010	mg/L	C	U	0.010	mg/L	C	U
Acetone	0.010	mg/L	C	U	0.010	mg/L	C	UJ	0.010	mg/L	C	U
Benzene	0.010	mg/L	C	U	0.010	mg/L	C	U	0.010	mg/L	C	U

TABLE C-17
(Continued)

PHASE II - CHEMICAL PARAMETERS

QA TYPE	RINSATE				RINSATE				TRIP BLANK			
SAMPLE NUMBER	111501				115399				111294			
ASSOCIATED SAMPLES	111492								111289			
SAMPLING DATE	05/20/93				05/25/93				04/07/93			
CHEMICAL PARAMETERS	RESULTS	UNITS	L	VQ	RESULTS	UNITS	L	VQ	RESULTS	UNITS	L	VQ
Volatile Organics												
Bromodichloromethane	0.010	mg/L	C	U	0.010	mg/L	C	U	0.010	mg/L	C	U
Bromoform	0.010	mg/L	C	U	0.010	mg/L	C	U	0.010	mg/L	C	U
Bromomethane	0.010	mg/L	C	U	0.010	mg/L	C	U	0.010	mg/L	C	UJ
Carbon Tetrachloride	0.010	mg/L	C	U	0.010	mg/L	C	U	0.010	mg/L	C	UJ
Carbon disulfide	0.010	mg/L	C	U	0.010	mg/L	C	U	0.010	mg/L	C	U
Chlorobenzene	0.010	mg/L	C	U	0.010	mg/L	C	U	0.010	mg/L	C	U
Chloroethane	0.010	mg/L	C	U	0.010	mg/L	C	UJ	0.006	mg/L	C	-
Chloroform	0.003	mg/L	C	J	0.010	mg/L	C	U	0.010	mg/L	C	U
Chloromethane	0.010	mg/L	C	U	0.010	mg/L	C	U	0.010	mg/L	C	U
Dibromochloromethane	0.010	mg/L	C	U	0.010	mg/L	C	U	0.010	mg/L	C	U
Ethylbenzene	0.010	mg/L	C	U	0.010	mg/L	C	U	0.010	mg/L	C	U
Methylene chloride	0.010	mg/L	C	UJ	0.010	mg/L	C	UJ	0.010	mg/L	C	U
Styrene	0.010	mg/L	C	U	0.010	mg/L	C	U	0.010	mg/L	C	U
Tetrachloroethene	0.010	mg/L	C	U	0.010	mg/L	C	UJ	0.010	mg/L	C	U
Toluene	0.010	mg/L	C	U	0.010	mg/L	C	U	0.010	mg/L	C	U
Trichloroethene	0.010	mg/L	C	U	0.010	mg/L	C	U	0.010	mg/L	C	U
Vinyl Acetate	0.010	mg/L	C	U	0.010	mg/L	C	U	0.010	mg/L	C	U
Vinyl chloride	0.010	mg/L	C	U	0.010	mg/L	C	U	0.010	mg/L	C	U
Xylenes, Total	0.010	mg/L	C	U	0.010	mg/L	C	U	0.010	mg/L	C	U
cis-1,3-Dichloropropene	0.010	mg/L	C	U	0.010	mg/L	C	U	0.010	mg/L	C	U
trans-1,3-Dichloropropene	0.010	mg/L	C	U	0.010	mg/L	C	U	0.010	mg/L	C	U
Semivolatile Organics												
1,2,4-Trichlorobenzene	0.010	mg/L	C	U	0.010	mg/L	C	U	NA			
1,2-Dichlorobenzene	0.010	mg/L	C	U	0.010	mg/L	C	U	NA			
1,3-Dichlorobenzene	0.010	mg/L	C	U	0.010	mg/L	C	U	NA			
1,4-Dichlorobenzene	0.010	mg/L	C	U	0.010	mg/L	C	U	NA			
2,4,5-Trichlorophenol	0.025	mg/L	C	U	0.025	mg/L	C	U	NA			
2,4,6-Trichlorophenol	0.010	mg/L	C	U	0.010	mg/L	C	U	NA			
2,4-Dichlorophenol	0.010	mg/L	C	U	0.010	mg/L	C	U	NA			
2,4-Dimethylphenol	0.010	mg/L	C	U	0.010	mg/L	C	U	NA			
2,4-Dinitrophenol	0.025	mg/L	C	R	0.025	mg/L	C	UJ	NA			
2,4-Dinitrotoluene	0.010	mg/L	C	UJ	0.010	mg/L	C	U	NA			
2,6-Dinitrotoluene	0.010	mg/L	C	U	0.010	mg/L	C	U	NA			
2-Benzyl-4-chlorophenol	0.010	mg/L	C	U	NA				NA			
2-Chloronaphthalene	0.010	mg/L	C	U	0.010	mg/L	C	U	NA			
2-Chlorophenol	0.010	mg/L	C	U	0.010	mg/L	C	U	NA			
2-Methylnaphthalene	0.010	mg/L	C	U	0.010	mg/L	C	U	NA			
2-Methylphenol	0.010	mg/L	C	U	0.010	mg/L	C	U	NA			
2-Nitroaniline	0.025	mg/L	C	U	0.025	mg/L	C	U	NA			
2-Nitrophenol	0.010	mg/L	C	U	0.010	mg/L	C	U	NA			

TABLE C-17
(Continued)

PHASE II - CHEMICAL PARAMETERS

QA TYPE	RINSATE				RINSATE				TRIP BLANK			
SAMPLE NUMBER	111501				115399				111294			
ASSOCIATED SAMPLES	111492								111289			
SAMPLING DATE	05/20/93				05/25/93				04/07/93			
CHEMICAL PARAMETERS	RESULTS	UNITS	L	VQ	RESULTS	UNITS	L	VQ	RESULTS	UNITS	L	VQ
Semivolatile Organics												
3,3'-Dichlorobenzidine	0.010	mg/L	C	U	0.010	mg/L	C	UJ	NA			
3-Nitroaniline	0.025	mg/L	C	U	0.025	mg/L	C	U	NA			
4,6-Dinitro-2-methylphenol	0.025	mg/L	C	R	0.025	mg/L	C	U	NA			
4-Bromophenyl phenyl ether	0.010	mg/L	C	U	0.010	mg/L	C	U	NA			
4-Chloro-3-methylphenol	0.010	mg/L	C	U	0.010	mg/L	C	U	NA			
4-Chlorophenylphenyl ether	0.010	mg/L	C	U	0.010	mg/L	C	U	NA			
4-Methylphenol	0.010	mg/L	C	U	0.010	mg/L	C	U	NA			
4-Nitroaniline	0.025	mg/L	C	U	0.025	mg/L	C	U	NA			
4-Nitrophenol	0.025	mg/L	C	UJ	0.025	mg/L	C	U	NA			
Acenaphthene	0.010	mg/L	C	U	0.010	mg/L	C	U	NA			
Acenaphthylene	0.010	mg/L	C	U	0.010	mg/L	C	U	NA			
Anthracene	0.010	mg/L	C	U	0.010	mg/L	C	U	NA			
Benzo(a)anthracene	0.010	mg/L	C	U	0.010	mg/L	C	U	NA			
Benzo(a)pyrene	0.010	mg/L	C	U	0.010	mg/L	C	U	NA			
Benzo(b)fluoranthene	0.010	mg/L	C	U	0.010	mg/L	C	U	NA			
Benzo(g,h,i)perylene	0.010	mg/L	C	U	0.010	mg/L	C	U	NA			
Benzo(k)fluoranthene	0.010	mg/L	C	U	0.010	mg/L	C	U	NA			
Benzoic acid	0.050	mg/L	C	R	NA				NA			
Benzyl alcohol	0.010	mg/L	C	UJ	NA				NA			
Butyl benzyl phthalate	0.010	mg/L	C	U	0.010	mg/L	C	U	NA			
Carbazole	0.010	mg/L	C	U	0.010	mg/L	C	U	NA			
Chrysene	0.010	mg/L	C	U	0.010	mg/L	C	U	NA			
Di-n-butyl phthalate	0.010	mg/L	C	U	0.010	mg/L	C	U	NA			
Di-n-octyl phthalate	0.010	mg/L	C	U	0.010	mg/L	C	U	NA			
Dibenzo(a,h)anthracene	0.010	mg/L	C	U	0.010	mg/L	C	U	NA			
Dibenzofuran	0.010	mg/L	C	U	0.010	mg/L	C	U	NA			
Diethyl phthalate	0.010	mg/L	C	U	0.010	mg/L	C	U	NA			
Dimethyl phthalate	0.010	mg/L	C	U	0.010	mg/L	C	U	NA			
Fluoranthene	0.010	mg/L	C	U	0.010	mg/L	C	U	NA			
Fluorene	0.010	mg/L	C	U	0.010	mg/L	C	U	NA			
Hexachlorobenzene	0.010	mg/L	C	U	0.010	mg/L	C	U	NA			
Hexachlorobutadiene	0.010	mg/L	C	U	0.010	mg/L	C	U	NA			
Hexachlorocyclopentadiene	0.010	mg/L	C	UJ	0.010	mg/L	C	UJ	NA			
Hexachloroethane	0.010	mg/L	C	U	0.010	mg/L	C	U	NA			
Indeno(1,2,3-cd)pyrene	0.010	mg/L	C	U	0.010	mg/L	C	U	NA			
Isophorone	0.010	mg/L	C	U	0.010	mg/L	C	U	NA			
N-Nitroso-di-n-propylamine	0.010	mg/L	C	U	0.010	mg/L	C	U	NA			
N-Nitrosodimethylamine	0.010	mg/L	C	U	NA				NA			
N-Nitrosodiphenylamine	0.010	mg/L	C	U	0.010	mg/L	C	U	NA			
Naphthalene	0.010	mg/L	C	U	0.010	mg/L	C	U	NA			
Nitrobenzene	0.010	mg/L	C	U	0.010	mg/L	C	U	NA			
Pentachlorophenol	0.025	mg/L	C	U	0.025	mg/L	C	U	NA			

TABLE C-17
(Continued)

PHASE II - CHEMICAL PARAMETERS

QA TYPE	RINSATE				RINSATE				TRIP BLANK			
SAMPLE NUMBER	111501				115399				111294			
ASSOCIATED SAMPLES	111492								111289			
SAMPLING DATE	05/20/93				05/25/93				04/07/93			
CHEMICAL PARAMETERS	RESULTS	UNITS	L	VQ	RESULTS	UNITS	L	VQ	RESULTS	UNITS	L	VQ
Semivolatile Organics												
Phenanthrene	0.010	mg/L	C	U	0.010	mg/L	C	U	NA			
Phenol	0.010	mg/L	C	U	0.010	mg/L	C	U	NA			
Pyrene	0.010	mg/L	C	U	0.010	mg/L	C	U	NA			
Tributyl phosphate	0.010	mg/L	C	U	NA				NA			
bis(2-Chloroethoxy)methane	0.010	mg/L	C	U	0.010	mg/L	C	U	NA			
bis(2-Chloroethyl)ether	0.010	mg/L	C	U	0.010	mg/L	C	U	NA			
bis(2-Chloroisopropyl) ether	0.010	mg/L	C	U	0.010	mg/L	C	U	NA			
bis(2-Ethylhexyl) phthalate	0.010	mg/L	C	U	0.010	mg/L	C	U	NA			
p-Chloroaniline	0.010	mg/L	C	U	0.010	mg/L	C	U	NA			
Pesticide Organics/PCBs												
4,4'-DDD	0.000	mg/L	C	U	0.000	mg/L	C	U	NA			
4,4'-DDE	0.000	mg/L	C	U	0.000	mg/L	C	U	NA			
4,4'-DDT	0.000	mg/L	C	UJ	0.000	mg/L	C	U	NA			
Aldrin	0.000	mg/L	C	U	0.000	mg/L	C	U	NA			
Aroclor-1016	0.001	mg/L	C	U	0.001	mg/L	C	UJ	NA			
Aroclor-1221	0.002	mg/L	C	U	0.002	mg/L	C	UJ	NA			
Aroclor-1232	0.001	mg/L	C	U	0.001	mg/L	C	UJ	NA			
Aroclor-1242	0.001	mg/L	C	U	0.001	mg/L	C	UJ	NA			
Aroclor-1248	0.001	mg/L	C	U	0.001	mg/L	C	UJ	NA			
Aroclor-1254	0.001	mg/L	C	U	0.001	mg/L	C	UJ	NA			
Aroclor-1260	0.001	mg/L	C	U	0.001	mg/L	C	UJ	NA			
Dieldrin	0.000	mg/L	C	U	0.000	mg/L	C	U	NA			
Endosulfan II	0.000	mg/L	C	U	0.000	mg/L	C	U	NA			
Endosulfan sulfate	0.000	mg/L	C	U	0.000	mg/L	C	U	NA			
Endosulfan-I	0.000	mg/L	C	U	0.000	mg/L	C	U	NA			
Endrin	0.000	mg/L	C	U	0.000	mg/L	C	U	NA			
Endrin aldehyde	0.000	mg/L	C	U	0.000	mg/L	C	U	NA			
Endrin ketone	0.000	mg/L	C	U	0.000	mg/L	C	U	NA			
Heptachlor	0.000	mg/L	C	U	0.000	mg/L	C	U	NA			
Heptachlor epoxide	0.000	mg/L	C	U	0.000	mg/L	C	U	NA			
Methoxychlor	0.001	mg/L	C	U	0.001	mg/L	C	U	NA			
Toxaphene	0.005	mg/L	C	U	0.005	mg/L	C	UJ	NA			
alpha-BHC	0.000	mg/L	C	UJ	0.000	mg/L	C	U	NA			
alpha-Chlordane	0.000	mg/L	C	U	0.000	mg/L	C	U	NA			
beta-BHC	0.000	mg/L	C	U	0.000	mg/L	C	U	NA			
delta-BHC	0.000	mg/L	C	UJ	0.000	mg/L	C	U	NA			
gamma-BHC (Lindane)	0.000	mg/L	C	UJ	0.000	mg/L	C	U	NA			
gamma-Chlordane	0.000	mg/L	C	U	0.000	mg/L	C	U	NA			

TABLE C-17
(Continued)

PHASE II - CHEMICAL PARAMETERS

QA TYPE	TRIP BLANK				TRIP BLANK				TRIP BLANK			
SAMPLE NUMBER	111295				111296				111299			
ASSOCIATED SAMPLES	111291				111293, 111297				111298, 111300			
SAMPLING DATE	04/06/93				04/01/93				04/01/93			
CHEMICAL PARAMETERS	RESULTS	UNITS	L	VQ	RESULTS	UNITS	L	VQ	RESULTS	UNITS	L	VQ
Volatile Organics												
1,1,1-Trichloroethane	0.010	mg/L	C	U	0.010	mg/L	C	U	0.010	mg/L	C	U
1,1,2,2-Tetrachloroethane	0.010	mg/L	C	U	0.010	mg/L	C	U	0.010	mg/L	C	U
1,1,2-Trichloroethane	0.010	mg/L	C	U	0.010	mg/L	C	U	0.010	mg/L	C	U
1,1-Dichloroethane	0.010	mg/L	C	U	0.010	mg/L	C	U	0.010	mg/L	C	U
1,1-Dichloroethene	0.010	mg/L	C	U	0.010	mg/L	C	U	0.010	mg/L	C	U
1,2-Dichloroethane	0.010	mg/L	C	U	0.010	mg/L	C	U	0.010	mg/L	C	U
1,2-Dichloroethene	0.010	mg/L	C	U	0.010	mg/L	C	U	0.010	mg/L	C	U
1,2-Dichloropropane	0.010	mg/L	C	U	0.010	mg/L	C	U	0.010	mg/L	C	U
2-Butanone	0.010	mg/L	C	U	0.010	mg/L	C	U	0.010	mg/L	C	U
2-Hexanone	0.010	mg/L	C	U	0.010	mg/L	C	U	0.010	mg/L	C	U
4-Methyl-2-pentanone	0.010	mg/L	C	U	0.010	mg/L	C	U	0.010	mg/L	C	U
Acetone	0.010	mg/L	C	U	0.010	mg/L	C	U	0.010	mg/L	C	U
Benzene	0.010	mg/L	C	U	0.010	mg/L	C	U	0.010	mg/L	C	U
Bromodichloromethane	0.010	mg/L	C	U	0.010	mg/L	C	U	0.010	mg/L	C	U
Bromoform	0.010	mg/L	C	U	0.010	mg/L	C	U	0.010	mg/L	C	U
Bromomethane	0.010	mg/L	C	UJ	0.010	mg/L	C	UJ	0.010	mg/L	C	UJ
Carbon Tetrachloride	0.010	mg/L	C	UJ	0.010	mg/L	C	U	0.010	mg/L	C	U
Carbon disulfide	0.010	mg/L	C	U	0.010	mg/L	C	U	0.010	mg/L	C	U
Chlorobenzene	0.010	mg/L	C	U	0.010	mg/L	C	U	0.010	mg/L	C	U
Chloroethane	0.010	mg/L	C	U	0.006	mg/L	C	J	0.005	mg/L	C	J
Chloroform	0.010	mg/L	C	U	0.010	mg/L	C	U	0.010	mg/L	C	U
Chloromethane	0.010	mg/L	C	UJ	0.010	mg/L	C	U	0.010	mg/L	C	U
Dibromochloromethane	0.010	mg/L	C	U	0.010	mg/L	C	U	0.010	mg/L	C	U
Ethylbenzene	0.010	mg/L	C	U	0.010	mg/L	C	U	0.010	mg/L	C	U
Methylene chloride	0.010	mg/L	C	U	0.010	mg/L	C	U	0.010	mg/L	C	U
Styrene	0.010	mg/L	C	U	0.010	mg/L	C	U	0.010	mg/L	C	U
Tetrachloroethene	0.010	mg/L	C	U	0.010	mg/L	C	U	0.010	mg/L	C	U
Toluene	0.010	mg/L	C	U	0.010	mg/L	C	U	0.010	mg/L	C	U
Trichloroethene	0.010	mg/L	C	U	0.010	mg/L	C	U	0.010	mg/L	C	U
Vinyl Acetate	0.010	mg/L	C	U	0.010	mg/L	C	U	0.010	mg/L	C	U
Vinyl chloride	0.010	mg/L	C	U	0.010	mg/L	C	U	0.010	mg/L	C	U
Xylenes, Total	0.010	mg/L	C	U	0.010	mg/L	C	U	0.010	mg/L	C	U
cis-1,3-Dichloropropene	0.010	mg/L	C	U	0.010	mg/L	C	U	0.010	mg/L	C	U
trans-1,3-Dichloropropene	0.010	mg/L	C	U	0.010	mg/L	C	U	0.010	mg/L	C	U

TABLE C-17
(Continued)

PHASE II - CHEMICAL PARAMETERS

QA TYPE	TRIP BLANK				TRIP BLANK				TRIP BLANK			
SAMPLE NUMBER	111302				111305				111308			
ASSOCIATED SAMPLES	111301, 111303				111304				111307, 111309			
SAMPLING DATE	04/01/93				04/02/93				04/02/93			
CHEMICAL PARAMETERS	RESULTS	UNITS	L	VQ	RESULTS	UNITS	L	VQ	RESULTS	UNITS	L	VQ
Volatile Organics												
1,1,1-Trichloroethane	0.010	mg/L	C	U	0.010	mg/L	C	U	0.010	mg/L	C	U
1,1,2,2-Tetrachloroethane	0.010	mg/L	C	U	0.010	mg/L	C	U	0.010	mg/L	C	U
1,1,2-Trichloroethane	0.010	mg/L	C	U	0.010	mg/L	C	U	0.010	mg/L	C	U
1,1-Dichloroethane	0.010	mg/L	C	U	0.010	mg/L	C	U	0.010	mg/L	C	U
1,1-Dichloroethene	0.010	mg/L	C	U	0.010	mg/L	C	U	0.010	mg/L	C	U
1,2-Dichloroethane	0.010	mg/L	C	U	0.010	mg/L	C	U	0.010	mg/L	C	U
1,2-Dichloroethene	0.010	mg/L	C	U	0.010	mg/L	C	U	0.010	mg/L	C	U
1,2-Dichloropropane	0.010	mg/L	C	U	0.010	mg/L	C	U	0.010	mg/L	C	U
2-Butanone	0.010	mg/L	C	U	0.010	mg/L	C	U	0.010	mg/L	C	U
2-Hexanone	0.010	mg/L	C	U	0.010	mg/L	C	U	0.010	mg/L	C	U
4-Methyl-2-pentanone	0.010	mg/L	C	U	0.010	mg/L	C	U	0.010	mg/L	C	U
Acetone	0.010	mg/L	C	U	0.010	mg/L	C	U	0.010	mg/L	C	U
Benzene	0.010	mg/L	C	U	0.010	mg/L	C	U	0.010	mg/L	C	U
Bromodichloromethane	0.010	mg/L	C	U	0.010	mg/L	C	U	0.010	mg/L	C	U
Bromoform	0.010	mg/L	C	U	0.010	mg/L	C	U	0.010	mg/L	C	U
Bromomethane	0.010	mg/L	C	UJ	0.010	mg/L	C	UJ	0.010	mg/L	C	UJ
Carbon Tetrachloride	0.010	mg/L	C	U	0.010	mg/L	C	U	0.010	mg/L	C	U
Carbon disulfide	0.010	mg/L	C	U	0.010	mg/L	C	U	0.010	mg/L	C	U
Chlorobenzene	0.010	mg/L	C	U	0.010	mg/L	C	U	0.010	mg/L	C	U
Chloroethane	0.006	mg/L	C	J	0.004	mg/L	C	J	0.004	mg/L	C	J
Chloroform	0.010	mg/L	C	U	0.010	mg/L	C	U	0.010	mg/L	C	U
Chloromethane	0.010	mg/L	C	U	0.010	mg/L	C	U	0.010	mg/L	C	U
Dibromochloromethane	0.010	mg/L	C	U	0.010	mg/L	C	U	0.010	mg/L	C	U
Ethylbenzene	0.010	mg/L	C	U	0.010	mg/L	C	U	0.010	mg/L	C	U
Methylene chloride	0.010	mg/L	C	U	0.010	mg/L	C	U	0.010	mg/L	C	U
Styrene	0.010	mg/L	C	U	0.010	mg/L	C	U	0.010	mg/L	C	U
Tetrachloroethene	0.010	mg/L	C	U	0.010	mg/L	C	U	0.010	mg/L	C	U
Toluene	0.010	mg/L	C	U	0.010	mg/L	C	U	0.010	mg/L	C	U
Trichloroethene	0.010	mg/L	C	U	0.010	mg/L	C	U	0.010	mg/L	C	U
Vinyl Acetate	0.010	mg/L	C	U	0.010	mg/L	C	U	0.010	mg/L	C	U
Vinyl chloride	0.010	mg/L	C	U	0.010	mg/L	C	U	0.010	mg/L	C	U
Xylenes, Total	0.010	mg/L	C	U	0.010	mg/L	C	U	0.010	mg/L	C	U
cis-1,3-Dichloropropene	0.010	mg/L	C	U	0.010	mg/L	C	U	0.010	mg/L	C	U
trans-1,3-Dichloropropene	0.010	mg/L	C	U	0.010	mg/L	C	U	0.010	mg/L	C	U

TABLE C-17
(Continued)

PHASE II - CHEMICAL PARAMETERS

QA TYPE	TRIP BLANK				TRIP BLANK				TRIP BLANK			
SAMPLE NUMBER	111311				111326				111330			
ASSOCIATED SAMPLES	111310, 111312				111325				111328			
SAMPLING DATE	04/02/93				04/06/93				04/08/93			
CHEMICAL PARAMETERS	RESULTS	UNITS	L	VQ	RESULTS	UNITS	L	VQ	RESULTS	UNITS	L	VQ
Volatile Organics												
1,1,1-Trichloroethane	0.010	mg/L	C	U	0.010	mg/L	C	U	0.010	mg/L	C	U
1,1,2,2-Tetrachloroethane	0.010	mg/L	C	U	0.010	mg/L	C	U	0.010	mg/L	C	U
1,1,2-Trichloroethane	0.010	mg/L	C	U	0.010	mg/L	C	U	0.010	mg/L	C	U
1,1-Dichloroethane	0.010	mg/L	C	U	0.010	mg/L	C	U	0.010	mg/L	C	U
1,1-Dichloroethene	0.010	mg/L	C	U	0.010	mg/L	C	U	0.010	mg/L	C	U
1,2-Dichloroethane	0.010	mg/L	C	U	0.010	mg/L	C	U	0.010	mg/L	C	U
1,2-Dichloroethene	0.010	mg/L	C	U	0.010	mg/L	C	U	0.010	mg/L	C	U
1,2-Dichloropropane	0.010	mg/L	C	U	0.010	mg/L	C	U	0.010	mg/L	C	U
2-Butanone	0.010	mg/L	C	U	0.010	mg/L	C	U	0.010	mg/L	C	U
2-Hexanone	0.010	mg/L	C	U	0.010	mg/L	C	U	0.010	mg/L	C	U
4-Methyl-2-pentanone	0.010	mg/L	C	U	0.010	mg/L	C	U	0.010	mg/L	C	U
Acetone	0.010	mg/L	C	U	0.010	mg/L	C	U	0.010	mg/L	C	U
Benzene	0.010	mg/L	C	U	0.010	mg/L	C	U	0.010	mg/L	C	U
Bromodichloromethane	0.010	mg/L	C	U	0.010	mg/L	C	U	0.010	mg/L	C	U
Bromoform	0.010	mg/L	C	U	0.010	mg/L	C	U	0.010	mg/L	C	U
Bromomethane	0.010	mg/L	C	UJ	0.010	mg/L	C	UJ	0.010	mg/L	C	U
Carbon Tetrachloride	0.010	mg/L	C	U	0.010	mg/L	C	UJ	0.010	mg/L	C	UJ
Carbon disulfide	0.010	mg/L	C	U	0.010	mg/L	C	U	0.010	mg/L	C	U
Chlorobenzene	0.010	mg/L	C	U	0.010	mg/L	C	U	0.010	mg/L	C	U
Chloroethane	0.004	mg/L	C	J	0.004	mg/L	C	J	0.005	mg/L	C	J
Chloroform	0.010	mg/L	C	U	0.010	mg/L	C	U	0.010	mg/L	C	U
Chloromethane	0.010	mg/L	C	U	0.010	mg/L	C	UJ	0.010	mg/L	C	U
Dibromochloromethane	0.010	mg/L	C	U	0.010	mg/L	C	U	0.010	mg/L	C	U
Ethylbenzene	0.010	mg/L	C	U	0.010	mg/L	C	U	0.010	mg/L	C	U
Methylene chloride	0.010	mg/L	C	U	0.013	mg/L	C	U	0.010	mg/L	C	U
Styrene	0.010	mg/L	C	U	0.010	mg/L	C	U	0.010	mg/L	C	U
Tetrachloroethene	0.010	mg/L	C	U	0.010	mg/L	C	U	0.010	mg/L	C	U
Toluene	0.010	mg/L	C	U	0.010	mg/L	C	U	0.010	mg/L	C	U
Trichloroethene	0.010	mg/L	C	U	0.010	mg/L	C	U	0.010	mg/L	C	U
Vinyl Acetate	0.010	mg/L	C	U	0.010	mg/L	C	U	0.010	mg/L	C	U
Vinyl chloride	0.010	mg/L	C	U	0.010	mg/L	C	U	0.010	mg/L	C	U
Xylenes, Total	0.010	mg/L	C	U	0.010	mg/L	C	U	0.010	mg/L	C	U
cis-1,3-Dichloropropene	0.010	mg/L	C	U	0.010	mg/L	C	U	0.010	mg/L	C	U
trans-1,3-Dichloropropene	0.010	mg/L	C	U	0.010	mg/L	C	U	0.010	mg/L	C	U

000453

6508

TABLE C-17
(Continued)

PHASE II - CHEMICAL PARAMETERS

QA TYPE	TRIP BLANK				TRIP BLANK				TRIP BLANK			
SAMPLE NUMBER	111333				111449				111460			
ASSOCIATED SAMPLES	111331				111441, 111448				111458, 111452, 111454			
SAMPLING DATE	04/08/93				04/27/93				04/30/93			
CHEMICAL PARAMETERS	RESULTS	UNITS	L	VQ	RESULTS	UNITS	L	VQ	RESULTS	UNITS	L	VQ
Volatile Organics												
1,1,1-Trichloroethane	0.010	mg/L	C	U	0.010	mg/L	C	U	0.010	mg/L	C	U
1,1,2,2-Tetrachloroethane	0.010	mg/L	C	U	0.010	mg/L	C	U	0.010	mg/L	C	U
1,1,2-Trichloroethane	0.010	mg/L	C	U	0.010	mg/L	C	U	0.010	mg/L	C	U
1,1-Dichloroethane	0.010	mg/L	C	U	0.010	mg/L	C	U	0.010	mg/L	C	U
1,1-Dichloroethene	0.010	mg/L	C	U	0.010	mg/L	C	U	0.010	mg/L	C	U
1,2-Dichloroethane	0.010	mg/L	C	U	0.010	mg/L	C	U	0.010	mg/L	C	U
1,2-Dichloroethene	0.010	mg/L	C	U	0.010	mg/L	C	U	0.010	mg/L	C	U
1,2-Dichloropropane	0.010	mg/L	C	U	0.010	mg/L	C	U	0.010	mg/L	C	U
2-Butanone	0.010	mg/L	C	U	0.010	mg/L	C	U	0.010	mg/L	C	UJ
2-Hexanone	0.010	mg/L	C	U	0.010	mg/L	C	U	0.010	mg/L	C	U
4-Methyl-2-pentanone	0.010	mg/L	C	U	0.010	mg/L	C	U	0.010	mg/L	C	U
Acetone	0.001	mg/L	C	-	0.003	mg/L	C	J	0.010	mg/L	C	U
Benzene	0.010	mg/L	C	U	0.010	mg/L	C	U	0.010	mg/L	C	U
Bromodichloromethane	0.010	mg/L	C	U	0.010	mg/L	C	U	0.010	mg/L	C	U
Bromoform	0.010	mg/L	C	U	0.010	mg/L	C	U	0.010	mg/L	C	U
Bromomethane	0.010	mg/L	C	UJ	0.010	mg/L	C	U	0.010	mg/L	C	U
Carbon Tetrachloride	0.010	mg/L	C	UJ	0.010	mg/L	C	U	0.010	mg/L	C	U
Carbon disulfide	0.010	mg/L	C	U	0.010	mg/L	C	UJ	0.010	mg/L	C	U
Chlorobenzene	0.010	mg/L	C	U	0.010	mg/L	C	U	0.010	mg/L	C	U
Chloroethane	0.005	mg/L	C	-	0.010	mg/L	C	UJ	0.010	mg/L	C	U
Chloroform	0.010	mg/L	C	U	0.010	mg/L	C	U	0.010	mg/L	C	U
Chloromethane	0.010	mg/L	C	U	0.010	mg/L	C	UJ	0.010	mg/L	C	U
Dibromochloromethane	0.010	mg/L	C	U	0.010	mg/L	C	U	0.010	mg/L	C	U
Ethylbenzene	0.010	mg/L	C	U	0.010	mg/L	C	U	0.010	mg/L	C	U
Methylene chloride	0.010	mg/L	C	U	0.010	mg/L	C	UJ	0.007	mg/L	C	J
Styrene	0.010	mg/L	C	U	0.010	mg/L	C	U	0.010	mg/L	C	U
Tetrachloroethene	0.010	mg/L	C	U	0.010	mg/L	C	U	0.010	mg/L	C	U
Toluene	0.010	mg/L	C	U	0.010	mg/L	C	U	0.010	mg/L	C	U
Trichloroethene	0.010	mg/L	C	U	0.010	mg/L	C	U	0.010	mg/L	C	U
Vinyl Acetate	0.010	mg/L	C	U	0.010	mg/L	C	U	NA			
Vinyl chloride	0.010	mg/L	C	U	0.010	mg/L	C	U	0.010	mg/L	C	U
Xylenes, Total	0.010	mg/L	C	U	0.010	mg/L	C	U	0.010	mg/L	C	U
cis-1,3-Dichloropropene	0.010	mg/L	C	U	0.010	mg/L	C	U	0.010	mg/L	C	U
trans-1,3-Dichloropropene	0.010	mg/L	C	U	0.010	mg/L	C	U	0.010	mg/L	C	U

000454

TABLE C-17
(Continued)

PHASE II - CHEMICAL PARAMETERS

QA TYPE	TRIP BLANK				TRIP/FIELD				TRIP BLANK			
SAMPLE NUMBER	111473				111479				111483			
ASSOCIATED SAMPLES	111464, 111466, 111471, 111468				111476, 111477				111480, 111482			
SAMPLING DATE	05/01/93				05/03/93				05/05/93			
CHEMICAL PARAMETERS	RESULTS	UNITS	L	VQ	RESULTS	UNITS	L	VQ	RESULTS	UNITS	L	VQ
Volatile Organics												
1,1,1-Trichloroethane	0.010	mg/L	C	U	0.010	mg/L	C	U	0.010	mg/L	C	U
1,1,2,2-Tetrachloroethane	0.010	mg/L	C	UJ	0.010	mg/L	C	U	0.010	mg/L	C	U
1,1,2-Trichloroethane	0.010	mg/L	C	U	0.010	mg/L	C	U	0.010	mg/L	C	U
1,1-Dichloroethane	0.010	mg/L	C	U	0.010	mg/L	C	U	0.010	mg/L	C	U
1,1-Dichloroethene	0.010	mg/L	C	U	0.010	mg/L	C	U	0.010	mg/L	C	U
1,2-Dichloroethane	0.010	mg/L	C	U	0.010	mg/L	C	U	0.010	mg/L	C	U
1,2-Dichloroethene	0.010	mg/L	C	U	0.010	mg/L	C	U	0.010	mg/L	C	U
1,2-Dichloropropane	0.010	mg/L	C	U	0.010	mg/L	C	U	0.010	mg/L	C	U
2-Butanone	0.010	mg/L	C	UJ	0.010	mg/L	C	U	0.010	mg/L	C	U
2-Hexanone	0.010	mg/L	C	UJ	0.010	mg/L	C	U	0.010	mg/L	C	U
4-Methyl-2-pentanone	0.010	mg/L	C	UJ	0.010	mg/L	C	U	0.010	mg/L	C	U
Acetone	0.010	mg/L	C	R	0.017	mg/L	C	-	0.010	mg/L	C	U
Benzene	0.010	mg/L	C	U	0.010	mg/L	C	U	0.010	mg/L	C	U
Bromodichloromethane	0.010	mg/L	C	U	0.010	mg/L	C	U	0.010	mg/L	C	U
Bromoform	0.010	mg/L	C	U	0.010	mg/L	C	U	0.010	mg/L	C	U
Bromomethane	0.010	mg/L	C	U	0.010	mg/L	C	U	0.010	mg/L	C	U
Carbon Tetrachloride	0.010	mg/L	C	U	0.010	mg/L	C	U	0.010	mg/L	C	U
Carbon disulfide	0.010	mg/L	C	U	0.010	mg/L	C	U	0.010	mg/L	C	UJ
Chlorobenzene	0.010	mg/L	C	U	0.010	mg/L	C	U	0.010	mg/L	C	U
Chloroethane	0.010	mg/L	C	U	0.010	mg/L	C	U	0.010	mg/L	C	UJ
Chloroform	0.010	mg/L	C	U	0.010	mg/L	C	U	0.010	mg/L	C	U
Chloromethane	0.010	mg/L	C	U	0.010	mg/L	C	U	0.010	mg/L	C	UJ
Dibromochloromethane	0.010	mg/L	C	U	0.010	mg/L	C	U	0.010	mg/L	C	U
Ethylbenzene	0.010	mg/L	C	U	0.010	mg/L	C	U	0.010	mg/L	C	U
Methylene chloride	0.010	mg/L	C	U	0.010	mg/L	C	U	0.010	mg/L	C	UJ
Styrene	0.010	mg/L	C	U	0.010	mg/L	C	U	0.010	mg/L	C	U
Tetrachloroethene	0.010	mg/L	C	U	0.010	mg/L	C	U	0.010	mg/L	C	U
Toluene	0.010	mg/L	C	U	0.010	mg/L	C	U	0.010	mg/L	C	U
Trichloroethene	0.010	mg/L	C	U	0.010	mg/L	C	U	0.010	mg/L	C	U
Vinyl Acetate	NA				NA				0.010	mg/L	C	U
Vinyl chloride	0.010	mg/L	C	U	0.010	mg/L	C	U	0.010	mg/L	C	U
Xylenes, Total	0.010	mg/L	C	U	0.010	mg/L	C	U	0.010	mg/L	C	U
cis-1,3-Dichloropropene	0.010	mg/L	C	U	0.010	mg/L	C	U	0.010	mg/L	C	U
trans-1,3-Dichloropropene	0.010	mg/L	C	U	0.010	mg/L	C	U	0.010	mg/L	C	U

000455
6508

TABLE C-17
(Continued)

PHASE II - CHEMICAL PARAMETERS

QA TYPE	TRIP BLANK				TRIP BLANK				TRIP BLANK			
SAMPLE NUMBER	111493				111537				111539			
ASSOCIATED SAMPLES	111492				111536				111540			
SAMPLING DATE	04/19/93				05/01/93				04/22/93			
CHEMICAL PARAMETERS	RESULTS	UNITS	L	VQ	RESULTS	UNITS	L	VQ	RESULTS	UNITS	L	VQ
Volatile Organics												
1,1,1-Trichloroethane	0.010	mg/L	C	U	0.010	mg/L	C	U	0.010	mg/L	C	U
1,1,2,2-Tetrachloroethane	0.010	mg/L	C	U	0.010	mg/L	C	U	0.010	mg/L	C	U
1,1,2-Trichloroethane	0.010	mg/L	C	U	0.010	mg/L	C	U	0.010	mg/L	C	U
1,1-Dichloroethane	0.010	mg/L	C	U	0.010	mg/L	C	U	0.010	mg/L	C	U
1,1-Dichloroethene	0.010	mg/L	C	U	0.010	mg/L	C	U	0.010	mg/L	C	U
1,2-Dichloroethane	0.010	mg/L	C	U	0.010	mg/L	C	U	0.010	mg/L	C	U
1,2-Dichloroethene	0.010	mg/L	C	U	0.010	mg/L	C	U	0.010	mg/L	C	U
1,2-Dichloropropane	0.010	mg/L	C	U	0.010	mg/L	C	U	0.010	mg/L	C	U
2-Butanone	0.010	mg/L	C	U	0.010	mg/L	C	U	0.004	mg/L	C	J
2-Hexanone	0.010	mg/L	C	UJ	0.010	mg/L	C	UJ	0.010	mg/L	C	UJ
4-Methyl-2-pentanone	0.010	mg/L	C	UJ	0.010	mg/L	C	U	0.010	mg/L	C	UJ
Acetone	0.063	mg/L	C	-	0.014	mg/L	C	-	0.021	mg/L	C	-
Benzene	0.010	mg/L	C	U	0.010	mg/L	C	U	0.010	mg/L	C	U
Bromodichloromethane	0.010	mg/L	C	U	0.010	mg/L	C	U	0.010	mg/L	C	U
Bromoform	0.010	mg/L	C	U	0.010	mg/L	C	U	0.010	mg/L	C	U
Bromomethane	0.010	mg/L	C	U	0.010	mg/L	C	U	0.010	mg/L	C	U
Carbon Tetrachloride	0.010	mg/L	C	U	0.010	mg/L	C	U	0.010	mg/L	C	U
Carbon disulfide	0.010	mg/L	C	U	0.010	mg/L	C	UJ	0.010	mg/L	C	U
Chlorobenzene	0.010	mg/L	C	U	0.010	mg/L	C	U	0.010	mg/L	C	U
Chloroethane	0.010	mg/L	C	U	0.010	mg/L	C	UJ	0.010	mg/L	C	U
Chloroform	0.010	mg/L	C	U	0.010	mg/L	C	U	0.010	mg/L	C	U
Chloromethane	0.010	mg/L	C	UJ	0.010	mg/L	C	UJ	0.010	mg/L	C	U
Dibromochloromethane	0.010	mg/L	C	U	0.010	mg/L	C	U	0.010	mg/L	C	U
Ethylbenzene	0.010	mg/L	C	U	0.010	mg/L	C	U	0.010	mg/L	C	U
Methylene chloride	0.010	mg/L	C	UJ	0.010	mg/L	C	UJ	0.010	mg/L	C	UJ
Styrene	0.010	mg/L	C	U	0.010	mg/L	C	U	0.010	mg/L	C	U
Tetrachloroethene	0.010	mg/L	C	U	0.010	mg/L	C	U	0.010	mg/L	C	U
Toluene	0.010	mg/L	C	U	0.010	mg/L	C	U	0.010	mg/L	C	U
Trichloroethene	0.010	mg/L	C	U	0.010	mg/L	C	U	0.010	mg/L	C	U
Vinyl Acetate	0.010	mg/L	C	U	0.010	mg/L	C	U	0.010	mg/L	C	U
Vinyl chloride	0.010	mg/L	C	U	0.010	mg/L	C	U	0.010	mg/L	C	U
Xylenes, Total	0.010	mg/L	C	U	0.010	mg/L	C	U	0.010	mg/L	C	U
cis-1,3-Dichloropropene	0.010	mg/L	C	U	0.010	mg/L	C	U	0.010	mg/L	C	U
trans-1,3-Dichloropropene	0.010	mg/L	C	U	0.010	mg/L	C	U	0.010	mg/L	C	U

TABLE C-17
(Continued)

PHASE II - CHEMICAL PARAMETERS

QA TYPE	TRIP BLANK				TRIP BLANK				TRIP BLANK			
SAMPLE NUMBER	111542				111545				111556			
ASSOCIATED SAMPLES	111543				111546				111548, 111549			
SAMPLING DATE	04/23/93				04/29/93				05/05/93			
CHEMICAL PARAMETERS	RESULTS	UNITS	L	VQ	RESULTS	UNITS	L	VQ	RESULTS	UNITS	L	VQ
Volatile Organics												
1,1,1-Trichloroethane	0.010	mg/L	C	U	0.010	mg/L	C	U	0.010	mg/L	C	U
1,1,2,2-Tetrachloroethane	0.010	mg/L	C	U	0.010	mg/L	C	U	0.010	mg/L	C	U
1,1,2-Trichloroethane	0.010	mg/L	C	U	0.010	mg/L	C	U	0.010	mg/L	C	U
1,1-Dichloroethane	0.010	mg/L	C	U	0.010	mg/L	C	U	0.010	mg/L	C	UJ
1,1-Dichloroethene	0.010	mg/L	C	U	0.010	mg/L	C	U	0.010	mg/L	C	U
1,2-Dichloroethane	0.010	mg/L	C	U	0.010	mg/L	C	U	0.010	mg/L	C	U
1,2-Dichloroethene	0.010	mg/L	C	U	0.010	mg/L	C	U	0.010	mg/L	C	U
1,2-Dichloropropane	0.010	mg/L	C	U	0.010	mg/L	C	U	0.010	mg/L	C	U
2-Butanone	0.004	mg/L	C	J	0.010	mg/L	C	U	0.010	mg/L	C	UJ
2-Hexanone	0.010	mg/L	C	UJ	0.010	mg/L	C	UJ	0.010	mg/L	C	U
4-Methyl-2-pentanone	0.010	mg/L	C	U	0.010	mg/L	C	U	0.010	mg/L	C	U
Acetone	0.010	mg/L	C	U	0.010	mg/L	C	U	0.004	mg/L	C	R
Benzene	0.010	mg/L	C	U	0.010	mg/L	C	U	0.010	mg/L	C	U
Bromodichloromethane	0.010	mg/L	C	U	0.010	mg/L	C	U	0.010	mg/L	C	U
Bromoform	0.010	mg/L	C	U	0.010	mg/L	C	U	0.010	mg/L	C	U
Bromomethane	0.010	mg/L	C	U	0.010	mg/L	C	U	0.010	mg/L	C	U
Carbon Tetrachloride	0.010	mg/L	C	U	0.010	mg/L	C	U	0.010	mg/L	C	U
Carbon disulfide	0.010	mg/L	C	U	0.010	mg/L	C	U	0.010	mg/L	C	UJ
Chlorobenzene	0.010	mg/L	C	U	0.010	mg/L	C	U	0.010	mg/L	C	U
Chloroethane	0.010	mg/L	C	U	0.010	mg/L	C	U	0.010	mg/L	C	UJ
Chloroform	0.010	mg/L	C	U	0.010	mg/L	C	U	0.010	mg/L	C	U
Chloromethane	0.010	mg/L	C	UJ	0.010	mg/L	C	UJ	0.010	mg/L	C	R
Dibromochloromethane	0.010	mg/L	C	U	0.010	mg/L	C	U	0.010	mg/L	C	U
Ethylbenzene	0.010	mg/L	C	U	0.010	mg/L	C	U	0.010	mg/L	C	U
Methylene chloride	0.010	mg/L	C	UJ	0.010	mg/L	C	U	0.010	mg/L	C	UJ
Styrene	0.010	mg/L	C	U	0.010	mg/L	C	U	0.010	mg/L	C	U
Tetrachloroethene	0.010	mg/L	C	U	0.010	mg/L	C	U	0.010	mg/L	C	U
Toluene	0.010	mg/L	C	U	0.010	mg/L	C	U	0.010	mg/L	C	U
Trichloroethene	0.010	mg/L	C	U	0.010	mg/L	C	U	0.010	mg/L	C	U
Vinyl Acetate	0.010	mg/L	C	U	0.010	mg/L	C	U	0.010	mg/L	C	UJ
Vinyl chloride	0.010	mg/L	C	UJ	0.010	mg/L	C	UJ	0.010	mg/L	C	UJ
Xylenes, Total	0.010	mg/L	C	U	0.010	mg/L	C	U	0.010	mg/L	C	U
cis-1,3-Dichloropropene	0.010	mg/L	C	U	0.010	mg/L	C	U	0.010	mg/L	C	U
trans-1,3-Dichloropropene	0.010	mg/L	C	U	0.010	mg/L	C	U	0.010	mg/L	C	U

TABLE C-17
(Continued)

PHASE II - CHEMICAL PARAMETERS

QA TYPE	TRIP BLANK				TRIP BLANK				TRIP/FIELD			
SAMPLE NUMBER	111557				114778				115318			
ASSOCIATED SAMPLES	111552, 111553				114776				111484, 111487, 111486			
SAMPLING DATE	05/05/93				06/07/93				05/06/93			
CHEMICAL PARAMETERS	RESULTS	UNITS	L	VQ	RESULTS	UNITS	L	VQ	RESULTS	UNITS	L	VQ
Volatile Organics												
1,1,1-Trichloroethane	0.010	mg/L	C	U	0.010	mg/L	C	U	0.010	mg/L	C	U
1,1,2,2-Tetrachloroethane	0.010	mg/L	C	U	0.010	mg/L	C	U	0.010	mg/L	C	U
1,1,2-Trichloroethane	0.010	mg/L	C	U	0.010	mg/L	C	U	0.010	mg/L	C	U
1,1-Dichloroethane	0.010	mg/L	C	UJ	0.010	mg/L	C	U	0.010	mg/L	C	U
1,1-Dichloroethene	0.010	mg/L	C	U	0.010	mg/L	C	U	0.010	mg/L	C	U
1,2-Dichloroethane	0.010	mg/L	C	U	0.010	mg/L	C	U	0.010	mg/L	C	U
1,2-Dichloroethene	0.010	mg/L	C	U	0.010	mg/L	C	U	0.010	mg/L	C	U
1,2-Dichloropropane	0.010	mg/L	C	U	0.010	mg/L	C	U	0.010	mg/L	C	U
2-Butanone	0.010	mg/L	C	UJ	0.010	mg/L	C	U	0.010	mg/L	C	U
2-Hexanone	0.010	mg/L	C	U	0.010	mg/L	C	UJ	0.010	mg/L	C	U
4-Methyl-2-pentanone	0.010	mg/L	C	U	0.010	mg/L	C	U	0.010	mg/L	C	U
Acetone	0.004	mg/L	C	R	0.010	mg/L	C	UJ	0.010	mg/L	C	U
Benzene	0.010	mg/L	C	U	0.010	mg/L	C	U	0.010	mg/L	C	U
Bromodichloromethane	0.010	mg/L	C	U	0.010	mg/L	C	U	0.010	mg/L	C	U
Bromoform	0.010	mg/L	C	U	0.010	mg/L	C	U	0.010	mg/L	C	U
Bromomethane	0.010	mg/L	C	U	0.010	mg/L	C	UJ	0.010	mg/L	C	U
Carbon Tetrachloride	0.010	mg/L	C	U	0.010	mg/L	C	U	0.010	mg/L	C	U
Carbon disulfide	0.010	mg/L	C	UJ	0.010	mg/L	C	U	0.010	mg/L	C	UJ
Chlorobenzene	0.010	mg/L	C	U	0.010	mg/L	C	U	0.010	mg/L	C	U
Chloroethane	0.010	mg/L	C	UJ	0.010	mg/L	C	UJ	0.010	mg/L	C	UJ
Chloroform	0.010	mg/L	C	U	0.010	mg/L	C	U	0.010	mg/L	C	U
Chloromethane	0.010	mg/L	C	R	0.010	mg/L	C	UJ	0.010	mg/L	C	UJ
Dibromochloromethane	0.010	mg/L	C	U	0.010	mg/L	C	U	0.010	mg/L	C	U
Ethylbenzene	0.010	mg/L	C	U	0.010	mg/L	C	U	0.010	mg/L	C	U
Methylene chloride	0.010	mg/L	C	UJ	0.010	mg/L	C	U	0.010	mg/L	C	UJ
Styrene	0.010	mg/L	C	U	0.010	mg/L	C	U	0.010	mg/L	C	U
Tetrachloroethene	0.010	mg/L	C	U	0.010	mg/L	C	U	0.010	mg/L	C	U
Toluene	0.010	mg/L	C	U	0.010	mg/L	C	U	0.010	mg/L	C	U
Trichloroethene	0.010	mg/L	C	U	0.010	mg/L	C	U	0.010	mg/L	C	U
Vinyl Acetate	0.010	mg/L	C	UJ	0.010	mg/L	C	U	0.010	mg/L	C	U
Vinyl chloride	0.010	mg/L	C	UJ	0.010	mg/L	C	U	0.010	mg/L	C	UJ
Xylenes, Total	0.010	mg/L	C	U	0.010	mg/L	C	U	0.010	mg/L	C	U
cis-1,3-Dichloropropene	0.010	mg/L	C	U	0.010	mg/L	C	U	0.010	mg/L	C	U
trans-1,3-Dichloropropene	0.010	mg/L	C	U	0.010	mg/L	C	U	0.010	mg/L	C	U

000458

TABLE C-17
(Continued)

PHASE II - CHEMICAL PARAMETERS

QA TYPE	TRIP BLANK				TRIP BLANK				TRIP BLANK			
SAMPLE NUMBER	115338				115352				115360			
ASSOCIATED SAMPLES	115335, 115333, 115334 115337, 115328, 115331				115350, 115351, 115353				115357, 115358, 115359			
SAMPLING DATE	05/10/93				05/12/93				05/13/93			
CHEMICAL PARAMETERS	RESULTS	UNITS	L	VQ	RESULTS	UNITS	L	VQ	RESULTS	UNITS	L	VQ
Volatile Organics												
1,1,1-Trichloroethane	0.010	mg/L	C	U	0.010	mg/L	C	U	0.010	mg/L	C	U
1,1,2,2-Tetrachloroethane	0.010	mg/L	C	U	0.010	mg/L	C	U	0.010	mg/L	C	U
1,1,2-Trichloroethane	0.010	mg/L	C	U	0.010	mg/L	C	U	0.010	mg/L	C	U
1,1-Dichloroethane	0.010	mg/L	C	U	0.010	mg/L	C	U	0.010	mg/L	C	U
1,1-Dichloroethene	0.010	mg/L	C	U	0.010	mg/L	C	UJ	0.010	mg/L	C	UJ
1,2-Dichloroethane	0.010	mg/L	C	U	0.010	mg/L	C	U	0.010	mg/L	C	U
1,2-Dichloroethene	0.010	mg/L	C	U	0.010	mg/L	C	U	0.010	mg/L	C	U
1,2-Dichloropropane	0.010	mg/L	C	U	0.010	mg/L	C	U	0.010	mg/L	C	U
2-Butanone	0.010	mg/L	C	U	0.001	mg/L	C	J	0.010	mg/L	C	UJ
2-Hexanone	0.010	mg/L	C	UJ	0.010	mg/L	C	UJ	0.010	mg/L	C	UJ
4-Methyl-2-pentanone	0.010	mg/L	C	U	0.010	mg/L	C	UJ	0.010	mg/L	C	UJ
Acetone	0.004	mg/L	C	R	0.010	mg/L	C	R	0.010	mg/L	C	R
Benzene	0.010	mg/L	C	U	0.010	mg/L	C	U	0.010	mg/L	C	U
Bromodichloromethane	0.010	mg/L	C	U	0.010	mg/L	C	U	0.010	mg/L	C	U
Bromoform	0.010	mg/L	C	U	0.010	mg/L	C	U	0.010	mg/L	C	U
Bromomethane	0.010	mg/L	C	U	0.010	mg/L	C	U	0.010	mg/L	C	U
Carbon Tetrachloride	0.010	mg/L	C	U	0.010	mg/L	C	U	0.010	mg/L	C	U
Carbon disulfide	0.010	mg/L	C	U	0.010	mg/L	C	U	0.010	mg/L	C	U
Chlorobenzene	0.010	mg/L	C	U	0.010	mg/L	C	U	0.010	mg/L	C	U
Chloroethane	0.010	mg/L	C	U	0.010	mg/L	C	U	0.010	mg/L	C	U
Chloroform	0.010	mg/L	C	U	0.010	mg/L	C	U	0.010	mg/L	C	U
Chloromethane	0.010	mg/L	C	U	0.010	mg/L	C	UJ	0.010	mg/L	C	UJ
Dibromochloromethane	0.010	mg/L	C	U	0.010	mg/L	C	U	0.010	mg/L	C	U
Ethylbenzene	0.010	mg/L	C	U	0.010	mg/L	C	U	0.010	mg/L	C	U
Methylene chloride	0.010	mg/L	C	U	0.010	mg/L	C	UJ	0.010	mg/L	C	UJ
Styrene	0.010	mg/L	C	U	0.010	mg/L	C	U	0.010	mg/L	C	U
Tetrachloroethene	0.010	mg/L	C	U	0.010	mg/L	C	U	0.010	mg/L	C	U
Toluene	0.010	mg/L	C	U	0.010	mg/L	C	U	0.010	mg/L	C	U
Trichloroethene	0.010	mg/L	C	U	0.010	mg/L	C	U	0.010	mg/L	C	U
Vinyl chloride	0.010	mg/L	C	U	0.010	mg/L	C	U	0.010	mg/L	C	U
Xylenes, Total	0.010	mg/L	C	U	0.010	mg/L	C	U	0.010	mg/L	C	U
cis-1,3-Dichloropropene	0.010	mg/L	C	U	0.010	mg/L	C	U	0.010	mg/L	C	U
trans-1,3-Dichloropropene	0.010	mg/L	C	U	0.010	mg/L	C	U	0.010	mg/L	C	U

TABLE C-17
(Continued)

PHASE II - CHEMICAL PARAMETERS

QA TYPE	TRIP BLANK				TRIP BLANK				TRIP BLANK			
SAMPLE NUMBER	115366				115373				115379			
ASSOCIATED SAMPLES	115362, 115363, 115365				115474				115376, 115377			
SAMPLING DATE	05/14/93				05/15/93				05/16/93			
CHEMICAL PARAMETERS	RESULTS	UNITS	L	VQ	RESULTS	UNITS	L	VQ	RESULTS	UNITS	L	VQ
Volatile Organics												
1,1,1-Trichloroethane	0.010	mg/L	C	U	0.010	mg/L	C	U	0.010	mg/L	C	U
1,1,2,2-Tetrachloroethane	0.010	mg/L	C	U	0.010	mg/L	C	U	0.010	mg/L	C	U
1,1,2-Trichloroethane	0.010	mg/L	C	U	0.010	mg/L	C	U	0.010	mg/L	C	U
1,1-Dichloroethane	0.010	mg/L	C	U	0.010	mg/L	C	U	0.010	mg/L	C	U
1,1-Dichloroethene	0.010	mg/L	C	U	0.010	mg/L	C	U	0.010	mg/L	C	U
1,2-Dichloroethane	0.010	mg/L	C	U	0.010	mg/L	C	U	0.010	mg/L	C	U
1,2-Dichloroethene	0.010	mg/L	C	U	0.010	mg/L	C	U	0.010	mg/L	C	U
1,2-Dichloropropane	0.010	mg/L	C	U	0.010	mg/L	C	U	0.010	mg/L	C	U
2-Butanone	0.002	mg/L	C	J	0.003	mg/L	C	J	0.010	mg/L	C	UJ
2-Hexanone	0.010	mg/L	C	U	0.010	mg/L	C	U	0.010	mg/L	C	UJ
4-Methyl-2-pentanone	0.010	mg/L	C	UJ	0.010	mg/L	C	UJ	0.010	mg/L	C	UJ
Acetone	0.010	mg/L	C	UJ	0.010	mg/L	C	UJ	0.002	mg/L	C	J
Benzene	0.008	mg/L	C	J	0.007	mg/L	C	J	0.010	mg/L	C	U
Bromodichloromethane	0.010	mg/L	C	U	0.010	mg/L	C	U	0.010	mg/L	C	U
Bromoform	0.010	mg/L	C	U	0.010	mg/L	C	U	0.010	mg/L	C	U
Bromomethane	0.010	mg/L	C	U	0.010	mg/L	C	U	0.010	mg/L	C	U
Carbon Tetrachloride	0.010	mg/L	C	U	0.010	mg/L	C	U	0.010	mg/L	C	U
Carbon disulfide	0.010	mg/L	C	U	0.010	mg/L	C	U	0.010	mg/L	C	U
Chlorobenzene	0.010	mg/L	C	U	0.010	mg/L	C	U	0.010	mg/L	C	U
Chloroethane	0.010	mg/L	C	UJ	0.010	mg/L	C	UJ	0.010	mg/L	C	U
Chloroform	0.010	mg/L	C	U	0.010	mg/L	C	U	0.010	mg/L	C	U
Chloromethane	0.010	mg/L	C	U	0.010	mg/L	C	U	0.010	mg/L	C	U
Dibromochloromethane	0.010	mg/L	C	U	0.010	mg/L	C	U	0.010	mg/L	C	U
Ethylbenzene	0.010	mg/L	C	U	0.010	mg/L	C	U	0.010	mg/L	C	U
Methylene chloride	0.012	mg/L	C	UJ	0.011	mg/L	C	UJ	0.010	mg/L	C	UJ
Styrene	0.010	mg/L	C	U	0.010	mg/L	C	U	0.010	mg/L	C	U
Tetrachloroethene	0.010	mg/L	C	U	0.010	mg/L	C	U	0.010	mg/L	C	U
Toluene	0.010	mg/L	C	U	0.010	mg/L	C	U	0.010	mg/L	C	U
Trichloroethene	0.010	mg/L	C	U	0.010	mg/L	C	U	0.010	mg/L	C	U
Vinyl Acetate	0.010	mg/L	C	UJ	0.010	mg/L	C	UJ	0.010	mg/L	C	UJ
Vinyl chloride	0.010	mg/L	C	UJ	0.010	mg/L	C	UJ	0.010	mg/L	C	U
Xylenes, Total	0.010	mg/L	C	U	0.010	mg/L	C	U	0.010	mg/L	C	U
cis-1,3-Dichloropropene	0.010	mg/L	C	U	0.010	mg/L	C	U	0.010	mg/L	C	U
trans-1,3-Dichloropropene	0.010	mg/L	C	U	0.010	mg/L	C	U	0.010	mg/L	C	U

000460

TABLE C-17
(Continued)

PHASE II - CHEMICAL PARAMETERS

QA TYPE	TRIP BLANK				TRIP BLANK				TRIP BLANK			
SAMPLE NUMBER	115383				115394				115470			
ASSOCIATED SAMPLES	115380				115392, 115393				115468, 115471, 115472			
SAMPLING DATE	05/17/93				05/20/93				05/15/93			
CHEMICAL PARAMETERS	RESULTS	UNITS	L	VQ	RESULTS	UNITS	L	VQ	RESULTS	UNITS	L	VQ
Volatile Organics												
1,1,1-Trichloroethane	0.010	mg/L	C	U	0.010	mg/L	C	U	0.010	mg/L	C	U
1,1,2,2-Tetrachloroethane	0.010	mg/L	C	U	0.010	mg/L	C	U	0.010	mg/L	C	U
1,1,2-Trichloroethane	0.010	mg/L	C	U	0.010	mg/L	C	U	0.010	mg/L	C	U
1,1-Dichloroethane	0.010	mg/L	C	U	0.010	mg/L	C	U	0.010	mg/L	C	U
1,1-Dichloroethene	0.010	mg/L	C	U	0.010	mg/L	C	U	0.010	mg/L	C	U
1,2-Dichloroethane	0.010	mg/L	C	U	0.010	mg/L	C	U	0.010	mg/L	C	U
1,2-Dichloroethene	0.010	mg/L	C	U	0.010	mg/L	C	U	0.010	mg/L	C	U
1,2-Dichloropropane	0.010	mg/L	C	U	0.010	mg/L	C	U	0.010	mg/L	C	U
2-Butanone	0.010	mg/L	C	UJ	0.010	mg/L	C	U	0.010	mg/L	C	UJ
2-Hexanone	0.010	mg/L	C	UJ	0.010	mg/L	C	UJ	0.010	mg/L	C	U
4-Methyl-2-pentanone	0.010	mg/L	C	UJ	0.010	mg/L	C	UJ	0.010	mg/L	C	UJ
Acetone	0.010	mg/L	C	U	0.010	mg/L	C	U	0.010	mg/L	C	UJ
Benzene	0.010	mg/L	C	U	0.010	mg/L	C	U	0.010	mg/L	C	U
Bromodichloromethane	0.010	mg/L	C	U	0.010	mg/L	C	U	0.010	mg/L	C	U
Bromoform	0.010	mg/L	C	U	0.010	mg/L	C	U	0.010	mg/L	C	U
Bromomethane	0.010	mg/L	C	U	0.010	mg/L	C	U	0.010	mg/L	C	U
Carbon Tetrachloride	0.010	mg/L	C	U	0.010	mg/L	C	U	0.010	mg/L	C	U
Carbon disulfide	0.010	mg/L	C	U	0.010	mg/L	C	U	0.010	mg/L	C	U
Chlorobenzene	0.010	mg/L	C	U	0.010	mg/L	C	U	0.010	mg/L	C	U
Chloroethane	0.010	mg/L	C	U	0.010	mg/L	C	U	0.010	mg/L	C	UJ
Chloroform	0.010	mg/L	C	U	0.010	mg/L	C	U	0.010	mg/L	C	U
Chloromethane	0.010	mg/L	C	U	0.010	mg/L	C	U	0.010	mg/L	C	U
Dibromochloromethane	0.010	mg/L	C	U	0.010	mg/L	C	U	0.010	mg/L	C	U
Ethylbenzene	0.010	mg/L	C	U	0.010	mg/L	C	U	0.010	mg/L	C	U
Methylene chloride	0.010	mg/L	C	UJ	0.010	mg/L	C	UJ	0.013	mg/L	C	UJ
Styrene	0.010	mg/L	C	U	0.010	mg/L	C	U	0.010	mg/L	C	U
Tetrachloroethene	0.010	mg/L	C	U	0.010	mg/L	C	U	0.010	mg/L	C	U
Toluene	0.010	mg/L	C	U	0.010	mg/L	C	U	0.010	mg/L	C	U
Trichloroethene	0.010	mg/L	C	U	0.010	mg/L	C	U	0.010	mg/L	C	U
Vinyl Acetate	0.010	mg/L	C	UJ	0.010	mg/L	C	U	0.010	mg/L	C	UJ
Vinyl chloride	0.010	mg/L	C	U	0.010	mg/L	C	U	0.010	mg/L	C	UJ
Xylenes, Total	0.010	mg/L	C	U	0.010	mg/L	C	U	0.010	mg/L	C	U
cis-1,3-Dichloropropene	0.010	mg/L	C	U	0.010	mg/L	C	U	0.010	mg/L	C	U
trans-1,3-Dichloropropene	0.010	mg/L	C	U	0.010	mg/L	C	U	0.010	mg/L	C	U

000161

6508

TABLE C-17
(Continued)

PHASE II - CHEMICAL PARAMETERS

QA TYPE	TRIP BLANK				TRIP BLANK				TRIP BLANK			
SAMPLE NUMBER	115476				115484				115489			
ASSOCIATED SAMPLES	115473, 115475				115480, 115481, 115482, 115483				115488			
SAMPLING DATE	05/19/93				06/08/93				06/23/93			
CHEMICAL PARAMETERS	RESULTS	UNITS	L	VQ	RESULTS	UNITS	L	VQ	RESULTS	UNITS	L	VQ
Volatile Organics												
1,1,1-Trichloroethane	0.010	mg/L	C	U	0.010	mg/L	C	U	0.010	mg/L	C	U
1,1,2,2-Tetrachloroethane	0.010	mg/L	C	U	0.010	mg/L	C	U	0.010	mg/L	C	U
1,1,2-Trichloroethane	0.010	mg/L	C	U	0.010	mg/L	C	U	0.010	mg/L	C	U
1,1-Dichloroethane	0.010	mg/L	C	U	0.010	mg/L	C	U	0.010	mg/L	C	U
1,1-Dichloroethene	0.010	mg/L	C	U	0.010	mg/L	C	U	0.010	mg/L	C	U
1,2-Dichloroethane	0.010	mg/L	C	U	0.010	mg/L	C	U	0.010	mg/L	C	U
1,2-Dichloroethene	0.010	mg/L	C	U	0.010	mg/L	C	U	0.010	mg/L	C	U
1,2-Dichloropropane	0.010	mg/L	C	U	0.010	mg/L	C	U	0.010	mg/L	C	U
2-Butanone	0.010	mg/L	C	UJ	0.010	mg/L	C	U	0.010	mg/L	C	U
2-Hexanone	0.010	mg/L	C	UJ	0.010	mg/L	C	UJ	0.001	mg/L	C	J
4-Methyl-2-pentanone	0.010	mg/L	C	UJ	0.010	mg/L	C	U	0.010	mg/L	C	U
Acetone	0.002	mg/L	C	J	0.007	mg/L	C	J	0.010	mg/L	C	-
Benzene	0.010	mg/L	C	-	0.010	mg/L	C	U	0.010	mg/L	C	U
Bromodichloromethane	0.010	mg/L	C	U	0.010	mg/L	C	U	0.010	mg/L	C	U
Bromoform	0.010	mg/L	C	U	0.010	mg/L	C	U	0.010	mg/L	C	U
Bromomethane	0.010	mg/L	C	U	0.010	mg/L	C	UJ	0.010	mg/L	C	U
Carbon Tetrachloride	0.010	mg/L	C	U	0.010	mg/L	C	U	0.010	mg/L	C	U
Carbon disulfide	0.010	mg/L	C	U	0.010	mg/L	C	U	0.010	mg/L	C	U
Chlorobenzene	0.010	mg/L	C	U	0.010	mg/L	C	U	0.010	mg/L	C	U
Chloroethane	0.010	mg/L	C	U	0.010	mg/L	C	UJ	0.010	mg/L	C	U
Chloroform	0.010	mg/L	C	U	0.010	mg/L	C	U	0.010	mg/L	C	U
Chloromethane	0.010	mg/L	C	U	0.010	mg/L	C	UJ	0.010	mg/L	C	U
Dibromochloromethane	0.010	mg/L	C	U	0.010	mg/L	C	U	0.010	mg/L	C	U
Ethylbenzene	0.010	mg/L	C	U	0.010	mg/L	C	U	0.010	mg/L	C	U
Methylene chloride	0.010	mg/L	C	UJ	0.010	mg/L	C	U	0.010	mg/L	C	UJ
Styrene	0.010	mg/L	C	U	0.010	mg/L	C	U	0.010	mg/L	C	U
Tetrachloroethene	0.010	mg/L	C	U	0.010	mg/L	C	U	0.010	mg/L	C	U
Toluene	0.010	mg/L	C	U	0.010	mg/L	C	U	0.010	mg/L	C	U
Trichloroethene	0.010	mg/L	C	U	0.010	mg/L	C	U	0.010	mg/L	C	U
Vinyl Acetate	0.010	mg/L	C	UJ	0.010	mg/L	C	U	NA			
Vinyl chloride	0.010	mg/L	C	U	0.010	mg/L	C	U	0.010	mg/L	C	U
Xylenes, Total	0.010	mg/L	C	U	0.010	mg/L	C	U	0.010	mg/L	C	U
cis-1,3-Dichloropropene	0.010	mg/L	C	U	0.010	mg/L	C	U	0.010	mg/L	C	U
trans-1,3-Dichloropropene	0.010	mg/L	C	U	0.010	mg/L	C	U	0.010	mg/L	C	U

000162

TABLE C-17
(Continued)

PHASE II - CHEMICAL PARAMETERS

QA TYPE	TRIP BLANK				TRIP BLANK			
SAMPLE NUMBER	115323				115477			
ASSOCIATED SAMPLES	115319, 115321, 115320				111572, 111574			
SAMPLING DATE	05/06/93				05/19/93			
CHEMICAL PARAMETERS	RESULTS	UNITS	L	VQ	RESULTS	UNITS	L	VQ
Volatile Organics								
1,1,1-Trichloroethane	0.010	mg/L	C	U	0.010	mg/L	C	U
1,1,2,2-Tetrachloroethane	0.010	mg/L	C	U	0.010	mg/L	C	U
1,1,2-Trichloroethane	0.010	mg/L	C	U	0.010	mg/L	C	U
1,1-Dichloroethane	0.010	mg/L	C	U	0.010	mg/L	C	U
1,1-Dichloroethene	0.010	mg/L	C	U	0.010	mg/L	C	U
1,2-Dichloroethane	0.010	mg/L	C	U	0.010	mg/L	C	U
1,2-Dichloroethene	0.010	mg/L	C	U	0.010	mg/L	C	U
1,2-Dichloropropane	0.010	mg/L	C	U	0.010	mg/L	C	U
2-Butanone	0.010	mg/L	C	U	0.010	mg/L	C	UJ
2-Hexanone	0.010	mg/L	C	U	0.010	mg/L	C	UJ
4-Methyl-2-pentanone	0.010	mg/L	C	U	0.010	mg/L	C	UJ
Acetone	0.010	mg/L	C	U	0.010	mg/L	C	U
Benzene	0.010	mg/L	C	U	0.010	mg/L	C	U
Bromodichloromethane	0.010	mg/L	C	U	0.010	mg/L	C	U
Bromoform	0.010	mg/L	C	U	0.010	mg/L	C	U
Bromomethane	0.010	mg/L	C	U	0.010	mg/L	C	U
Carbon Tetrachloride	0.010	mg/L	C	U	0.010	mg/L	C	U
Carbon disulfide	0.010	mg/L	C	UJ	0.010	mg/L	C	U
Chlorobenzene	0.010	mg/L	C	U	0.010	mg/L	C	U
Chloroethane	0.010	mg/L	C	UJ	0.010	mg/L	C	U
Chloroform	0.010	mg/L	C	U	0.010	mg/L	C	U
Chloromethane	0.010	mg/L	C	UJ	0.010	mg/L	C	U
Dibromochloromethane	0.010	mg/L	C	U	0.010	mg/L	C	U
Ethylbenzene	0.010	mg/L	C	U	0.010	mg/L	C	U
Methylene chloride	0.010	mg/L	C	UJ	0.010	mg/L	C	UJ
Styrene	0.010	mg/L	C	U	0.010	mg/L	C	U
Tetrachloroethene	0.010	mg/L	C	U	0.010	mg/L	C	U
Toluene	0.010	mg/L	C	U	0.010	mg/L	C	U
Trichloroethene	0.010	mg/L	C	U	0.010	mg/L	C	U
Vinyl Acetate	0.010	mg/L	C	U	0.010	mg/L	C	UJ
Vinyl chloride	0.010	mg/L	C	U	0.010	mg/L	C	U
Xylenes, Total	0.010	mg/L	C	U	0.010	mg/L	C	U
cis-1,3-Dichloropropene	0.010	mg/L	C	U	0.010	mg/L	C	U
trans-1,3-Dichloropropene	0.010	mg/L	C	U	0.010	mg/L	C	U

6508

TABLE C-18

TABLE C-18

SOLID WASTE LANDFILL
ON-SITE LABORATORY SCREENING RESULTS
PHASE II FIELD INVESTIGATION
OPERABLE UNIT 2 REMEDIAL INVESTIGATION
FERNALD ENVIRONMENTAL MANAGEMENT PROJECT

SURFACE WATER SCREENING SAMPLES

Location	Sample No.	Description	Date Collected	Total Uranium (µg/L)
SWL-SW-01	111290	Surface Water	4/7/93	51
SWL-SW-02	111292	Surface Water	4/6/93	60
1947	111651	Surface Water at Well	4/28/93	70

GROUNDWATER SCREENING SAMPLES (NOT FILTERED)

Location	Sample No.	Description	Sample Interval (ft.)[a]	Date Collected	Total Uranium (µg/L)
1035	111554	Existing Monitoring Well	NA[b]	5/5/93	2.3
1035	111555	Existing Monitoring Well	NA	5/5/93	2.3
1038	111550	Existing Monitoring Well	NA	5/5/93	5.0
1038	111551	Existing Monitoring Well	NA	5/5/93	4.7
1947	111650	New Monitoring Well	NA	4/28/93	10
1947	120488	New Monitoring Well	NA	7/28/93	11
1950	115485	New Monitoring Well	NA	6/8/93	21
1952	115469	New Monitoring Well	NA	5/15/93	23
1985	111439	Water from Boring	4.0-8.0	4/27/93	4900
2027	111544	Existing Monitoring Well	NA	4/23/93	11
2037	111541	Existing Monitoring Well	NA	4/22/93	4.6
2052	111547	Existing Monitoring Well	NA	4/29/93	4.7
2947	111573	Duplicate of 115474	NA	5/19/93	0.5
2947	115474	Existing Monitoring Well	NA	5/19/93	0.5
2949	111490	New Monitoring Well	NA	4/17/93	0.4
2951	111538	New Monitoring Well	NA	5/1/93	0.8
2953	115490	New Monitoring Well	NA	6/23/93	1.1
11037	115374	Water from Boring	21.0-22.0	5/15/93	1000
11039	115388	Water from Boring	8.0-10.0	5/19/93	650
11040	115398	Water from Boring	25.0-30.0	5/20/93	50

See footnotes at end of table

TABLE C-18
(Continued)

SEDIMENT SCREENING SAMPLES

Location	Sample No.	Sample Interval (ft.)	% of Total Sample Weight	Date Collected	Total Uranium (mg/kg)
FINE FRACTION (< 200 MESH SIEVE SIZE)					
SWL-SD01	111495	0.0-0.5	7.22	4/20/93	14
SWL-SD01	111496	0.0-0.5	6.69	4/20/93	63
SWL-SD01	111497	0.0-0.5	6.70	4/20/93	24
SWL-SD01	111498	0.0-0.5	4.76	4/20/93	44
COARSE FRACTION (>200 MESH SIEVE SIZE)					
SWL-SD01	111495	0.0-0.5	92.78	4/20/93	<11
SWL-SD01	111496	0.0-0.5	93.31	4/20/93	56
SWL-SD01	111497	0.0-0.5	93.30	4/20/93	28
SWL-SD01	111498	0.0-0.5	95.24	4/20/93	35
TOTAL SAMPLE - CALCULATED					
SWL-SD01	111495	0.0-0.5	NA	4/20/93	<11
SWL-SD01	111496	0.0-0.5	NA	4/20/93	56
SWL-SD01	111497	0.0-0.5	NA	4/20/93	28
SWL-SD01	111498	0.0-0.5	NA	4/20/93	35

SUBSURFACE SCREENING SAMPLES

Location	Sample No.	Sample Interval (ft.)	Date Collected	Total Uranium (mg/kg)	Total Thorium (mg/kg)
1947	111647	19.0-20.5	4/26/93	<11	NA
1947	111649	8.0-10.0	4/26/93	<11	NA
1950	111685	4.0-6.0	5/5/93	<11	NA
1950	115272	10.0-12.0	5/5/93	<11	NA
1952	111676	6.0-8.0	4/30/93	<11	NA
1952	111677	14.0-16.0	4/30/93	<11	NA
1986	111450	2.5-5.0	4/28/93	1280	15.5
2947	111384	60.0-78.0	4/13/93	<11	NA
2949	111193	4.0-6.0	3/26/93	<11	<18
2949	111206	14.0-16.0	3/26/93	<11	<18
2951	111431	58.0-73.0	4/17/93	<11	NA
2951	111433	0.0-5.1	4/21/93	<11	NA
2953	115460	60.0-75.0	5/27/93	<11	<18

ALPHA/BETA SCREENING SAMPLES

Location	Sample No.	Sample Interval (ft.)	Date Collected	Alpha Activity (pCi/g)	Beta Activity (pCi/g)
1986	111450	2.5-5.0	4/28/93	4700	3000
1990	115367	6.0-9.0	5/10/93	130	200

[a]The sample interval is depth, in feet, below the ground surface

[b]NA = Not Applicable

6508

TABLE C-19

TABLE C-19A

SOLID WASTE LANDFILL
FEMP LABORATORY SCREENING DATA RESULTS
ACTIVITY CONCENTRATIONS OF CIS PROFILE SAMPLES
OPERABLE UNIT 2 REMEDIAL INVESTIGATION
FERNALD ENVIRONMENTAL MANAGEMENT PROJECT

Begin - End Depth (feet)	Radionuclide	Qualifier[a]	Activity Concentrations (pCi/g)	Uncertainty Value (pCi/g)
		BOREHOLE 49-01		
0 - 1	Radium-226		1.80	.40
0 - 1	Thorium-232		1.00	.60
0 - 1	Uranium-238		18.20	3.60
1 - 2	Radium-226	<[b]	.60	NA[c]
1 - 2	Thorium-232		.70	.50
1 - 2	Uranium-238		6.70	3.50
2 - 4	Radium-226		.80	.50
2 - 4	Thorium-232	<	5.30	NA
2 - 4	Uranium-238		6.10	3.90
4 - 6	Radium-226		4.60	.70
4 - 6	Thorium-232		1.90	.70
4 - 6	Uranium-238		35.10	5.80
6 - 7	Radium-226	<	1.50	NA
6 - 7	Thorium-232	<	2.20	NA
6 - 7	Uranium-238		9.30	4.00
7 - 8	Radium-226		.60	.20
7 - 8	Thorium-232	<	.30	NA
7 - 8	Uranium-238	<	7.30	NA
10 - 12	Radium-226	<	1.00	NA
10 - 12	Thorium-232		1.20	.50
10 - 12	Uranium-238	<	6.10	NA
12 - 13	Radium-226	<	.60	NA
12 - 13	Thorium-232		1.00	.60
12 - 13	Uranium-238		8.10	5.60
13 - 14	Radium-226		.90	.40
13 - 14	Thorium-232	<	2.60	NA
13 - 14	Uranium-238	<	11.30	NA
14 - 16	Radium-226	<	1.00	NA
14 - 16	Thorium-232		.80	.60
14 - 16	Uranium-238	<	15.50	NA
16 - 17	Radium-226		.90	.30
16 - 17	Thorium-232	<	.30	NA
16 - 17	Uranium-238	<	5.00	NA

See footnotes at end of table

TABLE C-19A
(Continued)

Begin - End Depth (feet)	Radionuclide	Qualifier[a]	Activity Concentrations (pCi/g)	Uncertainty Value (pCi/g)
BOREHOLE 49-01 (Continued)				
17 - 18	Radium-226		.90	.40
17 - 18	Thorium-232		.70	.30
17 - 18	Uranium-238	<	10.50	NA
BOREHOLE 49-02				
0 - 1	Radium-226	<	.90	NA
0 - 1	Thorium-232		2.00	.60
0 - 1	Uranium-238		15.40	3.60
1 - 2	Radium-226	<	1.10	NA
1 - 2	Thorium-232		1.00	.50
1 - 2	Uranium-238		4.90	2.60
2 - 3	Radium-226		.70	.50
2 - 3	Thorium-232		1.30	.50
2 - 3	Uranium-238		7.10	2.60
3 - 4	Radium-226		.70	.30
3 - 4	Thorium-232	<	4.70	NA
3 - 4	Uranium-238	<	9.60	NA
4 - 5	Radium-226		.70	.60
4 - 5	Thorium-232	<	3.20	NA
4 - 5	Uranium-238		3.50	2.40
5 - 6	Radium-226		.60	.30
5 - 6	Thorium-232	<	.30	NA
5 - 6	Uranium-238	<	9.20	NA
6 - 8	Radium-226		.90	.40
6 - 8	Thorium-232		1.00	.50
6 - 8	Uranium-238		5.30	2.60
8 - 9	Radium-226		.90	.50
8 - 9	Thorium-232		1.00	.40
8 - 9	Uranium-238	<	12.70	NA
9 - 10	Radium-226		.70	.50
9 - 10	Thorium-232		1.10	.50
9 - 10	Uranium-238	<	12.60	NA
10 - 11	Radium-226		1.10	.40
10 - 11	Thorium-232		1.00	.60
10 - 11	Uranium-238	<	8.30	NA
11 - 12	Radium-226		1.40	.50
11 - 12	Thorium-232		1.60	.60
11 - 12	Uranium-232		4.30	2.40

See footnotes at end of table

TABLE C-19A
(Continued)

Begin - End Depth (feet)	Radionuclide	Qualifier[a]	Activity Concentrations (pCi/g)	Uncertainty Value (pCi/g)
		BOREHOLE 49-03		
0 - 2	Radium-226	<	.20	NA
0 - 2	Thorium-232		2.40	.80
0 - 2	Uranium-238		19.30	7.50
2 - 4	Radium-226	<	.70	NA
2 - 4	Thorium-232		1.20	.50
2 - 4	Uranium-238		6.10	3.10
4 - 5	Radium-226		.70	.40
4 - 5	Thorium-232	<	3.50	NA
4 - 5	Uranium-238		4.40	3.80
5 - 6	Radium-226		1.00	.40
5 - 6	Thorium-232		1.30	.40
5 - 6	Uranium-238		13.70	4.00
6 - 8	Radium-226	<	5.20	NA
6 - 8	Thorium-232		79.70	4.00
6 - 8	Uranium-238		338.00	226.00
8 - 10	Radium-226	<	1.90	NA
8 - 10	Thorium-232		17.10	2.90
8 - 10	Uranium-238		146.00	16.00
10 - 12	Radium-226	<	2.00	NA
10 - 12	Thorium-232		12.80	1.50
10 - 12	Uranium-238		198.00	16.00
12 - 13	Radium-226	<	1.40	NA
12 - 13	Thorium-232		3.10	.90
12 - 13	Uranium-238		48.90	7.10
13 - 14	Radium-226	<	1.70	NA
13 - 14	Thorium-232	<	.40	NA
13 - 14	Uranium-238		9.20	2.80
14 - 15	Radium-226	<	.80	NA
14 - 15	Thorium-232		.60	.40
14 - 15	Uranium-238	<	7.00	NA
15 - 16	Radium-226		.80	.40
15 - 16	Thorium-232		1.10	.50
15 - 16	Uranium-232		6.30	2.60
		BOREHOLE 49-04		
0 - 2	Radium-226			
0 - 2	Thorium-232	<		
0 - 2	Uranium-238	<		
2 - 3	Radium-226		1.00	.50

See footnotes at end of table

TABLE C-19A
(Continued)

Begin - End Depth (feet)	Radionuclide	Qualifier[a]	Activity Concentrations (pCi/g)	Uncertainty Value (pCi/g)
BOREHOLE 49-04 (continued)				
2 - 3	Thorium-232	<	.30	NA
2 - 3	Uranium-238	<	10.30	NA
3 - 4	Radium-226		.90	.40
3 - 4	Thorium-232		1.00	.50
3 - 4	Uranium-238	<	9.30	NA
4 - 5	Radium-226	<	1.50	NA
4 - 5	Thorium-232	<	.30	NA
4 - 5	Uranium-238	<	4.70	NA
5 - 6	Radium-226		1.10	.60
5 - 6	Thorium-232		1.00	.50
5 - 6	Uranium-238	<	8.60	NA
6 - 8	Radium-226	<	.70	NA
6 - 8	Thorium-232	<	.30	NA
6 - 8	Uranium-238	<	5.30	NA
BOREHOLE 49-05				
0 - 2	Radium-226		.80	.50
0 - 2	Thorium-232		1.60	.40
0 - 2	Uranium-238		5.90	2.40
2 - 3	Radium-226		.70	.50
2 - 3	Thorium-232		1.20	.50
2 - 3	Uranium-238		9.40	2.70
3 - 4	Radium-226		.50	NA
3 - 4	Thorium-232	<	2.30	NA
3 - 4	Uranium-238	<	4.20	2.10
4 - 5	Radium-226		.60	.40
4 - 5	Thorium-232		1.10	.70
4 - 5	Uranium-238		14.80	3.50
5 - 6	Radium-226		.70	.50
5 - 6	Thorium-232		.80	.30
5 - 6	Uranium-238	<	7.70	NA
6 - 7	Radium-226	<	.10	NA
6 - 7	Thorium-232		1.20	.30
6 - 7	Uranium-238		8.10	NA
7 - 8	Radium-226	<	.90	NA
7 - 8	Thorium-232		1.40	NA
7 - 8	Uranium-238		10.60	NA
8 - 9	Radium-226		.90	.30
8 - 9	Thorium-232		.30	NA

See footnotes at end of table

TABLE C-19A
(Continued)

Begin - End Depth (feet)	Radionuclide	Qualifier[a]	Activity Concentrations (pCi/g)	Uncertainty Value (pCi/g)
BOREHOLE 49-05 (Continued)				
8 - 9	Uranium-238		9.80	NA
9 - 10	Radium-226	<	.40	.30
9 - 10	Thorium-232	<	1.30	.40
9 - 10	Uranium-238		3.90	NA
10 - 11	Radium-226		.60	.40
10 - 11	Thorium-232		.80	.30
10 - 11	Uranium-238	<	3.20	2.60
11 - 12	Radium-226		.60	.40
11 - 12	Thorium-232		.60	.40
11 - 12	Uranium-232	<	10.40	NA
13 - 14	Radium-226	<	1.80	NA
13 - 14	Thorium-232	<	1.40	NA
13 - 14	Uranium-232		11.30	2.00
BOREHOLE 49-06				
0 - 1	Radium-226	<	1.60	na
0 - 1	Thorium-232		1.00	.40
0 - 1	Uranium-238		13.90	4.80
1 - 2	Radium-226	<	2.50	NA
1 - 2	Thorium-232		1.20	.80
1 - 2	Uranium-238		8.80	4.80
4 - 6	Radium-226	<	1.80	NA
4 - 6	Thorium-232		.80	.50
4 - 6	Uranium-238		8.20	3.70
6 - 7	Radium-226		.70	.40
6 - 7	Thorium-232	<	4.30	NA
6 - 7	Uranium-238		7.50	NA
7 - 8	Radium-226		.80	.40
7 - 8	Thorium-232		1.20	.60
7 - 8	Uranium-238	<	8.30	NA
10 - 11	Radium-226	<	2.80	NA
10 - 11	Thorium-232	<	4.10	NA
10 - 11	Uranium-238	<	8.10	NA
11 - 12	Radium-226	<	.20	NA
11 - 12	Thorium-232		1.10	.60
11 - 12	Uranium-238	<	13.20	NA
12 - 13	Radium-226	<	.90	NA
12 - 13	Thorium-232		.70	.40
12 - 13	Uranium-238		3.80	2.00

See footnotes at end of table

TABLE C-19A
(Continued)

Begin - End Depth (feet)	Radionuclide	Qualifier[a]	Activity Concentrations (pCi/g)	Uncertainty Value (pCi/g)
BOREHOLE 49-06 (continued)				
13 - 14	Radium-226		.60	.40
13 - 14	Thorium-232		.80	.40
13 - 14	Uranium-238	<	6.60	NA
14 - 15	Radium-226		.80	.40
14 - 15	Thorium-232	<	6.00	NA
14 - 15	Uranium-238		3.30	2.70
15 - 16	Radium-226	<	1.30	NA
15 - 16	Thorium-232		3.20	NA
15 - 16	Uranium-238	<	5.70	NA
16 - 17	Radium-226	<	.80	NA
16 - 17	Thorium-232	<	.40	NA
16 - 17	Uranium-238	<	16.10	NA
17 - 18	Radium-226		.80	.50
17 - 18	Thorium-232		.40	NA
17 - 18	Uranium-238	<	12.30	NA

[a]Laboratory Qualifiers, no data validation was performed on screening data.

[b]< = Less than

[c]NA = Not applicable

TABLE C-19B

SOLID WASTE LANDFILL
CIS SURFACE SOIL ON-SITE ANALYTICAL DATA
OPERABLE UNIT 2 REMEDIAL INVESTIGATION
FERNALD ENVIRONMENTAL MANAGEMENT PROJECT

FEMP ID#	Date	Beginning/Ending Depth (ft.)	Isotope	Activity (pCi/g)	Uncertainty	Lab. Qualifier[a]
FMP-SL-46-238	09-MAR-87	0.5/1	Cesium-137	1.2	NA[b]	<[c]
			Potassium-40	9.5	3.6	
			Radium-226	0.7	0.5	
			Ruthenium-106	3.7	NA	<
			Thorium-232	2.5	NA	<
			Uranium-238	99.7	8.5	
FMP-SL-46-265	17-MAR-87	0.5/1	Cesium-137	1.4	0.5	
			Potassium-40	1	NA	<
			Radium-226	1.7	0.7	
			Ruthenium-106	8.2	NA	<
			Thorium-232	3.8	0.7	
			Uranium-238	99.6	10	
FMP-SL-46-266	17-MAR-87	1/1.5	Cesium-137	0.9	0.6	
			Potassium-40	1	NA	<
			Radium-226	2.3	0.6	
			Ruthenium-106	7	NA	<
			Thorium-232	4.4	1.4	
			Uranium-238	107	10	
FMP-SS-46-078	02-FEB-87	0/0.5	Cesium-137	0.3	0.2	
			Potassium-40	10.6	1.7	
			Radium-226	1	0.2	
			Ruthenium-106	8	NA	<
			Thorium-232	0.8	0.3	
			Uranium-238	7.6	2.8	
FMP-SS-46-079	02-FEB-87	0/0.5	Cesium-137	0.5	NA	<
			Potassium-40	10	3.4	
			Radium-226	0.6	0.3	
			Ruthenium-106	8	NA	<
			Thorium-232	1.5	0.6	
			Uranium-238	4.6	3	

See footnotes at end of table

TABLE C-19B
(Continued)

FEMP ID#	Date	Beginning/Ending Depth (ft.)	Isotope	Activity (pCi/g)	Uncertainty	Lab. Qualifier[a]
FMP-SS-46-080	02-FEB-87	0/0.5	Cesium-137	0.5	NA	<
			Potassium-40	6.9	NA	<
			Radium-226	0.5	NA	<
			Ruthenium-106	4.4	NA	<
			Thorium-232	2	0.4	
			Uranium-238	13.5	2.8	
FMP-SS-46-081	02-FEB-87	0/0.5	Cesium-137	0.8	NA	<
			Potassium-40	8.1	0.3	
			Radium-226	0.9	0.3	
			Ruthenium-106	2.5	NA	<
			Thorium-232	1.7	0.7	
			Uranium-238	9.4	3	
FMP-SS-46-081D	02-FEB-87	0/0.5	Cesium-137	0.9	NA	<
			Potassium-40	6.2	NA	<
			Radium-226	0.6	0.2	
			Ruthenium-106	3.1	NA	<
			Thorium-232	1.4	0.6	
			Uranium-238	10.1	2.9	
FMP-SS-46-082	02-FEB-87	0/0.5	Cesium-137	0.5	0.4	
			Potassium-40	11.5	NA	<
			Radium-226	1.7	0.3	
			Ruthenium-106	2.2	NA	<
			Thorium-232	2.2	0.9	
			Uranium-238	37.8	5	
FMP-SS-46-083	02-FEB-87	0/0.5	Cesium-137	0.9	NA	<
			Potassium-40	8.8	NA	<
			Radium-226	0.9	0.3	
			Ruthenium-106	5	NA	<
			Thorium-232	0.9	0.4	
			Uranium-238	12.2	2.6	

See footnotes at end of table

TABLE C-19B
(Continued)

FEMP ID#	Date	Beginning/Ending Depth (ft.)	Isotope	Activity (pCi/g)	Uncertainty	Lab. Qualifier[a]
FMP-SS-46-084	02-FEB-87	0/0.5	Cesium-137	0.5	NA	<
			Potassium-40	14.3	NA	<
			Radium-226	0.5	0.3	
			Ruthenium-106	4.4	NA	<
			Thorium-232	0.9	0.3	
			Uranium-238	8.7	2.8	
FMP-SS-46-085	02-FEB-87	0/0.5	Cesium-137	0.9	NA	<
			Potassium-40	8.2	3	
			Radium-226	0.9	0.4	
			Ruthenium-106	3.8	NA	<
			Thorium-232	1.1	0.5	
			Uranium-238	85.1	8	
FMP-SS-46-086	02-FEB-87	0/0.5	Cesium-137	0.5	NA	<
			Potassium-40	12.5	3.3	
			Radium-226	0.4	NA	<
			Ruthenium-106	0.5	NA	<
			Thorium-232	0.8	0.3	
			Uranium-238	5.6	2.7	
FMP-SS-46-124	10-FEB-87	0/0.5	Cesium-137	0.4	NA	<
			Potassium-40	5.6	2.4	
			Radium-226	0.8	0.3	
			Ruthenium-106	9.5	NA	<
			Thorium-232	1.5	0.4	
			Uranium-238	28	5	
FMP-SS-46-125	10-FEB-87	0/0.5	Cesium-137	0.8	NA	<
			Potassium-40	5.7	5	
			Radium-226	0.6	0.3	
			Ruthenium-106	9.8	NA	<
			Thorium-232	1.8	0.9	
			Uranium-238	10.2	3.4	

TABLE C-19B
(Continued)

FEMP ID#	Date	Beginning/Ending Depth (ft.)	Isotope	Activity (pCi/g)	Uncertainty	Lab. Qualifier[a]
FMP-SS-46-217	26-FEB-87	0/0.16	Cesium-137	0.4	NA	<
			Potassium-40	10.1	3.9	
			Radium-226	0.7	0.1	
			Ruthenium-106	19.6	NA	<
			Thorium-232	1.5	0.5	
			Uranium-238	30.1	5	
FMP-SS-46-352	16-APR-87	0/0.16	Cesium-137	0.3	0.2	
			Potassium-40	9.3	3	
			Radium-226	0.9	0.3	
			Ruthenium-106	5.7	NA	<
			Thorium-232	0.7	0.6	
			Uranium-238	12.1	3.5	

[a]Laboratory qualifiers, data not validated

[b]NA = Not applicable

[c]< = Less than

TABLE C-19C

SOLID WASTE LANDFILL
SEDIMENT ON-SITE ANALYTICAL DATA
OPERABLE UNIT 2 REMEDIAL INVESTIGATION
FERNALD ENVIRONMENTAL MANAGEMENT PROJECT

FEMP ID#	Date	Beginning/Ending Depth (ft.)	Isotope	Activity (pCi/g)	Uncertainty	Lab. Qualifier[a]
FMP-SD-21-007	19-MAY-87	0/1	Cesium-137	0.1	NA[b]	<[c]
			Potassium-40	4.2	2.4	
			Radium-226	0.7	0.2	
			Ruthenium-106	4.3	NA	<
			Thorium-232	0.6	0.3	
			Uranium-238	4.2	2.5	
FMP-SD-21-008	19-MAY-87	0/0.75	Cesium-137	0.1	NA	<
			Potassium-40	6.9	3	
			Radium-226	0.9	NA	<
			Ruthenium-106	0.6	NA	<
			Thorium-232	0.7	0.5	
			Uranium-238	6.3	2.6	
FMP-SD-21-009	19-MAY-87	0/0.75	Cesium-137	0.7	NA	<
			Potassium-40	7.4	3	
			Radium-226	0.8	0.3	
			Ruthenium-106	4.4	NA	<
			Thorium-232	1.8	NA	<
			Uranium-238	6.8	3.1	

[a]Laboratory qualifiers, data not validated

[b]NA = Not applicable

[c]< = Less than

TABLE C-19D

SOLID WASTE LANDFILL
CIS FIDLER SURFACE READINGS
OPERABLE UNIT 2 REMEDIAL INVESTIGATION
FERNALD ENVIRONMENTAL MANAGEMENT PROJECT

State Planer Coordinates		
North (ft)	East (ft)	Reading (CPM)
482077.84	1379560.38	5603.00
482084.09	1379560.50	5296.00
482090.34	1379560.63	6167.00
482096.56	1379560.88	9199.00
482102.81	1379561.00	9037.00
482152.81	1379562.38	12125.00
482177.78	1379563.13	15626.00
482184.03	1379563.25	14706.00
482190.28	1379563.38	15322.00
482196.53	1379563.63	8956.00
482202.78	1379563.75	16043.00
482202.78	1379563.75	14461.00
482227.78	1379564.50	12766.00
482234.03	1379564.63	11882.00
482240.28	1379564.75	9601.00
482246.53	1379565.00	12821.00
482252.78	1379565.13	11653.00
482252.78	1379565.13	10910.00
482259.03	1379565.25	8311.00
482265.25	1379565.50	10831.00
482271.50	1379565.63	9231.00
482277.75	1379565.75	8800.00
482284.00	1379566.00	7557.00
482290.25	1379566.13	7445.00
482296.50	1379566.38	10234.00
482077.66	1379566.63	5495.00
482083.91	1379566.75	5577.00

TABLE C-19D
(Continued)

State Planer Coordinates		
North (ft)	East (ft)	Reading (CPM)
482090.16	1379566.88	7595.00
482096.41	1379567.13	9376.00
482102.66	1379567.25	13101.00
482352.72	1379567.88	7011.00
482402.72	1379569.25	6359.00
482177.63	1379569.38	17544.00
482183.88	1379569.50	22901.00
482190.13	1379569.63	16608.00
482196.38	1379569.88	20001.00
482202.63	1379570.00	17080.00
482452.69	1379570.63	11295.00
482227.59	1379570.75	15385.00
482233.84	1379570.88	11905.00
482240.09	1379571.00	13678.00
482252.59	1379571.38	13762.00
482258.84	1379571.50	13334.00
482265.09	1379571.75	12196.00
482271.34	1379571.88	12606.00
482277.59	1379572.00	14495.00
482502.69	1379572.00	5597.00
482283.84	1379572.25	13762.00
482290.09	1379572.38	13637.00
482296.34	1379572.63	13044.00
482077.50	1379572.88	6180.00
482302.59	1379572.75	11812.00
482077.50	1379572.88	6180.00
482083.75	1379573.00	5241.00
482090.00	1379573.13	8119.00
482096.25	1379573.38	9434.00

TABLE C-19D
(Continued)

State Planer Coordinates		
North (ft)	East (ft)	Reading (CPM)
482102.47	1379573.50	11071.00
482177.47	1379575.63	19355.00
482183.69	1379575.75	15707.00
482189.94	1379575.88	25001.00
482196.19	1379576.13	21277.00
482202.44	1379576.25	24897.00
482227.44	1379577.00	14963.00
482233.69	1379577.13	14926.00
482239.94	1379577.25	19119.00
482246.19	1379577.50	13899.00
482252.44	1379577.63	13637.00
482258.69	1379577.75	12932.00
482264.91	1379578.00	15385.00
482271.16	1379578.13	14493.00
482277.41	1379578.25	15790.00
482283.66	1379578.50	13223.00
482289.91	1379578.63	13393.00
482296.16	1379578.88	13709.00
482077.31	1379579.13	5353.00
482083.56	1379579.25	4980.00
482089.81	1379579.38	6061.00
482096.06	1379579.63	10518.00
482102.31	1379579.75	12850.00
482177.28	1379581.88	18592.00
482183.53	1379582.00	22399.00
482189.78	1379582.13	21005.00
482196.03	1379582.38	19878.00
482202.28	1379582.50	18364.00
482227.25	1379583.13	14399.00

TABLE C-19D
(Continued)

State Planer Coordinates		
North (ft)	East (ft)	Reading (CPM)
482233.50	1379583.38	18819.00
482252.25	1379583.88	12146.00
482258.50	1379584.00	14852.00
482264.75	1379584.25	15076.00
482271.00	1379584.38	15707.00
482277.25	1379584.50	15076.00
482283.50	1379584.75	16217.00
482289.75	1379584.88	13334.00
482070.91	1379585.13	8311.00
482296.00	1379585.13	12992.00
482077.16	1379585.38	4769.00
482083.41	1379585.50	5195.00
482089.66	1379585.63	8041.00
482095.91	1379585.88	12749.00
482102.16	1379586.00	11939.00
482177.13	1379588.13	18634.00
482183.38	1379588.25	17658.00
482189.59	1379588.38	12968.00
482195.84	1379588.63	16539.00
482202.09	1379588.75	20834.00
482227.09	1379589.38	15916.00
482252.09	1379590.13	11674.00
482258.34	1379590.25	11451.00
482264.59	1379590.50	14229.00
482270.81	1379590.63	13275.00
482277.06	1379590.75	21286.00
482283.31	1379591.00	13764.00
482289.56	1379591.13	14229.00
482070.72	1379591.38	9662.00

TABLE C-19D
(Continued)

State Planer Coordinates		
North (ft)	East (ft)	Reading (CPM)
482295.81	1379591.38	13827.00
482076.97	1379591.63	5297.00
482083.22	1379591.75	5026.00
482089.47	1379591.88	7895.00
482314.56	1379591.88	13514.00
482320.81	1379592.00	13168.00
482095.72	1379592.13	10318.00
482327.06	1379592.13	12669.00
482101.97	1379592.25	13136.00
482276.91	1379597.00	13334.00
482283.16	1379597.25	14852.00
482289.41	1379597.38	14229.00
482076.81	1379597.88	4766.00
482083.06	1379598.00	5416.00
482089.31	1379598.13	8735.00
482095.56	1379598.38	14899.00
482101.81	1379598.50	14963.00
482276.72	1379603.25	13454.00
482070.38	1379603.88	8108.00
482076.63	1379604.13	5055.00
482082.88	1379604.25	4658.00
482089.13	1379604.38	7443.00
482095.38	1379604.63	22535.00
482101.63	1379604.75	20558.00
482276.56	1379609.50	9203.00
482070.22	1379610.13	8979.00
482076.47	1379610.38	5546.00
482082.72	1379610.50	4816.00
482088.97	1379610.63	8558.00

TABLE C-19D
(Continued)

State Planer Coordinates		
North (ft)	East (ft)	Reading (CPM)
482095.22	1379610.88	29127.00
482101.47	1379611.00	32978.00
482101.47	1379611.00	32315.00
482107.72	1379611.13	30548.00
482113.94	1379611.38	26559.00
482120.19	1379611.50	20271.00
482126.44	1379611.75	25863.00
482151.44	1379612.38	17646.00
482151.41	1379612.38	16746.00
482157.69	1379612.50	19032.00
482163.94	1379612.75	16216.00
482170.19	1379612.88	12203.00
482176.44	1379613.00	11729.00
482201.41	1379613.75	12235.00
482226.41	1379614.38	12321.00
482232.66	1379614.63	11868.00
482238.91	1379614.75	12553.00
482276.41	1379615.75	9902.00
482070.06	1379616.38	9585.00
482076.28	1379616.63	5566.00
482082.53	1379616.75	5111.00
482088.78	1379616.88	9524.00
482095.03	1379617.13	32978.00
482101.28	1379617.25	32975.00
482107.53	1379617.38	28205.00
482113.78	1379617.63	52556.00
482120.03	1379617.75	19737.00
482126.28	1379617.88	20980.00
482151.28	1379618.63	19991.00

TABLE C-19D
(Continued)

State Planer Coordinates		
North (ft)	East (ft)	Reading (CPM)
482157.50	1379618.75	17965.00
482163.75	1379619.00	11495.00
482170.00	1379619.13	9317.00
482176.25	1379619.25	10990.00
482226.25	1379620.63	13899.00
482232.50	1379620.88	13762.00
482238.72	1379621.00	12001.00
482076.13	1379622.88	5475.00
482082.38	1379623.00	4425.00
482088.63	1379623.13	7482.00
482094.88	1379623.38	32619.00
482101.13	1379623.50	36233.00
482107.38	1379623.63	25001.00
482113.63	1379623.88	19787.00
482119.84	1379624.00	18615.00
482126.09	1379624.13	20500.00
482151.09	1379624.88	20690.00
482157.34	1379625.00	23256.00
482163.59	1379625.25	12351.00
482169.84	1379625.38	10715.00
482176.09	1379625.50	10411.00
482226.06	1379626.88	14789.00
482232.31	1379627.13	12766.00
482238.56	1379627.25	11453.00
482075.94	1379629.13	5139.00
482082.19	1379629.25	4849.00
482088.44	1379629.38	9376.00
482094.69	1379629.63	23448.00
482100.94	1379629.75	37051.00

TABLE C-19D
(Continued)

State Planer Coordinates		
North (ft)	East (ft)	Reading (CPM)
482107.19	1379629.88	18889.00
482113.44	1379630.13	21353.00
482119.69	1379630.25	16394.00
482125.94	1379630.38	26683.00
482150.94	1379631.13	22432.00
482157.19	1379631.25	44128.00
482163.41	1379631.50	12680.00
482169.66	1379631.63	12064.00
482175.91	1379631.75	13275.00
482088.28	1379635.63	10205.00
482094.53	1379635.88	22849.00
482100.78	1379636.00	30613.00
482107.03	1379636.13	28300.00
482113.28	1379636.38	35715.00
482119.53	1379636.50	21002.00
482125.75	1379636.63	18998.00
482150.75	1379637.38	12001.00
482157.00	1379637.50	12766.00
482163.25	1379637.75	17965.00
482169.50	1379637.88	15303.00
482175.75	1379638.00	16217.00
482225.72	1379639.38	15439.00
482231.97	1379639.63	13825.00
462238.22	1379639.75	15626.00
482075.63	1379641.50	5085.00
482081.84	1379641.75	4889.00
482088.09	1379641.88	10170.00
482094.34	1379642.13	17807.00
482100.59	1379642.25	28302.00

TABLE C-19D
(Continued)

State Planer Coordinates		
North (ft)	East (ft)	Reading (CPM)
482106.84	1379642.38	29412.00
482113.09	1379642.63	28572.00
482119.34	1379642.75	26591.00
482125.59	1379642.88	69770.00
482075.44	1379647.75	4681.00
482081.69	1379648.00	4992.00
482087.94	1379648.13	9647.00
482094.19	1379648.38	16394.00
482100.44	1379648.50	25211.00
482106.69	1379648.63	22223.00
482112.94	1379648.88	20137.00
482119.19	1379649.00	29125.00
482125.41	1379649.13	23448.00
482075.28	1379654.00	4598.00
482081.53	1379654.25	5227.00
482087.75	1379654.38	11195.00
482094.00	1379654.63	14852.00
482100.25	1379654.75	17462.00
482106.50	1379654.88	20135.00
482112.75	1379655.13	19351.00
482119.00	1379655.25	45455.00
482125.25	1379655.38	16761.00
482075.09	1379660.25	5577.00
482081.34	1379660.50	4452.00
482087.59	1379660.63	9790.00
482093.84	1379660.88	13637.00
482100.09	1379661.00	17390.00
482100.09	1379661.00	18692.00
482106.34	1379661.13	2056.00

TABLE C-19D
(Continued)

State Planer Coordinates		
North (ft)	East (ft)	Reading (CPM)
482112.59	1379661.38	18073.00
482118.84	1379661.50	47620.00
482125.09	1379661.63	11253.00
482131.31	1379661.88	9647.00
482137.56	1379662.00	8597.00
482143.81	1379662.13	9555.00
482150.06	1379662.38	10222.00
482150.06	1379662.38	11236.00
482156.31	1379662.50	9804.00
482162.56	1379662.75	16636.00
482168.81	1379662.88	20851.00
482175.06	1379663.00	14424.00
482200.06	1379663.75	11451.00
482200.06	1379663.75	10866.00
482206.31	1379663.88	10685.00
482212.53	1379664.13	11306.00
482218.78	1379664.25	10896.00
482225.03	1379664.38	10792.00
482250.03	1379665.13	10941.00
482275.03	1379665.75	13709.00
482099.91	1379667.25	21908.00
482106.16	1379667.38	17442.00
482112.41	1379667.63	16575.00
482118.66	1379667.75	17544.00
482124.91	1379667.88	10495.00
482131.16	1379668.13	12712.00
482137.41	1379668.25	17868.00
482143.66	1379668.38	16484.00
482149.91	1379668.63	15464.00

TABLE C-19D
(Continued)

State Planer Coordinates		
North (ft)	East (ft)	Reading (CPM)
482156.16	1379668.75	12146.00
482162.41	1379669.00	17330.00
482168.66	1379669.13	19607.00
482174.88	1379669.25	17658.00
482199.88	1379670.00	10990.00
482206.13	1379670.13	11765.00
482212.38	1379670.38	12553.00
482218.63	1379670.50	11300.00
482224.88	1379670.63	13899.00
482449.97	1379670.63	11562.00
482074.75	1379672.75	5127.00
482099.75	1379673.50	20774.00
482106.00	1379673.63	17042.00
482112.25	1379673.88	15239.00
482118.50	1379074.00	13393.00
482124.75	1379674.13	10310.00
482131.00	1379674.38	11236.00
482137.22	1379674.50	19231.00
482143.47	1379674.63	28847.00
482149.72	1379674.88	20690.00
482155.97	1379675.00	19481.00
482162.22	1379675.25	17818.00
482168.47	1379675.38	18405.00
482174.72	1379675.50	20008.00
482199.72	1379676.25	12459.00
482205.97	1379676.38	13393.00
482212.22	1379676.50	15874.00
482218.44	1379676.75	14609.00
482224.69	1379676.88	13725.00

TABLE C-19D
(Continued)

State Planer Coordinates		
North (ft)	East (ft)	Reading (CPM)
482074.59	1379679.00	4943.00
482099.56	1379679.75	16395.00
482105.81	1379679.88	16760.00
482112.06	1379680.13	12146.00
482118.31	1379680.25	13275.00
482124.56	1379680.38	23448.00
482130.81	1379680.63	12606.00
482137.06	1379680.75	14852.00
482143.31	1379680.88	10078.00
482149.56	1379681.13	14286.00
482155.81	1379681.25	17544.00
482162.06	1379681.50	25977.00
482168.31	1379681.63	17485.00
482174.56	1379681.75	20280.00
482199.53	1379682.50	21421.00
482205.78	1379682.63	14424.00
482212.03	1379682.75	17721.00
482218.28	1379683.00	17143.00
482224.53	1379683.13	15286.00
482074.41	1379685.25	5259.00
482080.66	1379685.50	4526.00
482086.91	1379685.63	25211.00
482093.16	1379685.75	17547.00
482099.41	1379686.00	18294.00
482105.66	1379686.13	19481.00
482111.91	1379686.38	14424.00
482118.16	1379686.50	18010.00
482124.41	1379686.63	11633.00
482130.66	1379686.88	11868.00

TABLE C-19D
(Continued)

State Planer Coordinates		
North (ft)	East (ft)	Reading (CPM)
482136.91	1379687.00	10792.00
482143.13	1379687.13	10468.00
482149.38	1379687.38	15152.00
482155.63	1379687.50	17868.00
482161.88	1379687.75	19951.00
482168.13	1379687.88	21164.00
482174.38	1379688.00	18182.00
482180.63	1379688.25	20271.00
482186.88	1379688.38	15968.00
482193.13	1379688.50	13958.00
482199.38	1379688.75	15347.00
482205.63	1379688.88	16950.00
482211.88	1379689.00	18073.00
482218.13	1379689.25	16217.00
482224.34	1379689.38	15790.00
482249.34	1379690.13	12397.00
482074.25	1379691.50	5309.00
482080.50	1379691.75	4717.00
482086.75	1379691.88	13892.00
482093.00	1379692.00	16854.00
482093.00	1379692.00	16854.00
482099.22	1379692.25	21277.00
482105.47	1379692.38	19355.00
482111.72	1379692.63	20690.00
482117.97	1379692.75	15307.00
482124.22	1379692.88	9710.00
482130.47	1379693.13	10649.00
482136.72	1379693.25	11195.00
482142.97	1379693.38	11301.00

TABLE C-19D
(Continued)

State Planer Coordinates		
North (ft)	East (ft)	Reading (CPM)
482149.22	1379693.63	29498.00
482155.47	1379693.75	22065.00
482161.72	1379693.88	21227.00
482167.97	1379694.13	18878.00
482174.22	1379694.25	16667.00
482180.47	1379694.50	18182.00
482186.69	1379694.63	15626.00
482192.94	1379694.75	14789.00
482199.19	1379695.00	15521.00
482205.44	1379695.13	11195.00
482211.69	1379695.25	17442.00
482217.94	1379695.50	15001.00
482224.19	1379695.63	13606.00
482230.44	1379695.88	12821.00
482236.69	1379696.00	14424.00
482242.94	1379696.13	10417.00
482249.19	1379696.38	11236.00
482074.06	1379696.75	5182.00
482080.31	1379698.00	5191.00
482086.56	1379698.13	17965.00
482092.81	1379698.25	18361.00
482099.06	1379698.50	21583.00
482105.31	1379698.63	33718.00
482111.56	1379698.88	16305.00
482117.81	1379699.00	14424.00
482124.06	1379699.13	11071.00
482130.31	1379699.38	10959.00
482136.56	1379699.50	11812.00
482142.78	1379699.63	16523.00

TABLE C-19D
(Continued)

State Planer Coordinates		
North (ft)	East (ft)	Reading (CPM)
482149.03	1379699.88	15707.00
482155.28	1379700.00	23268.00
482161.53	1379700.13	20834.00
482167.78	1379700.38	20980.00
482174.03	1379700.50	16760.00
482180.28	1379700.75	14151.00
482186.53	1379700.88	15076.00
482192.78	1379701.00	12876.00
482199.03	1379701.25	14260.00
482205.28	1379701.38	14575.00
482211.53	1379701.50	14564.00
482217.78	1379701.75	21986.00
482224.03	1379701.88	21741.00
482230.25	1379702.13	13454.00
482236.50	1379702.25	14062.00
482242.75	1379702.38	11495.00
482249.00	1379702.63	10910.00
482073.91	1379704.00	5494.00
482080.16	1379704.25	5292.00
482086.41	1379704.38	16667.00
482092.66	1379704.50	17442.00
482098.91	1379704.75	22399.00
482105.13	1379704.88	18293.00
482111.38	1379705.13	15790.00
482117.63	1379705.25	17868.00
482123.88	1379705.38	12712.00
482130.13	1379705.63	11674.00
482136.38	1379705.75	14557.00
482142.63	1379705.88	14355.00

TABLE C-19D
(Continued)

State Planer Coordinates		
North (ft)	East (ft)	Reading (CPM)
482148.88	1379706.13	24001.00
482155.13	1379706.25	23256.00
482161.38	1379706.38	22069.00
482167.63	1379706.63	44145.00
482173.88	1379706.75	19231.00
482180.13	1379707.00	15310.00
482186.34	1379707.13	16131.00
482192.59	1379707.25	19140.00
482198.84	1379707.50	15759.00
482205.09	1379707.63	15473.00
482211.34	1379707.75	15312.00
482217.59	1379708.00	21439.00
482223.84	1379708.13	20464.00
482230.09	1379708.25	14228.00
482236.34	1379708.50	15509.00
482242.59	1379708.63	11765.00
482248.84	1379708.88	13762.00
482073.72	1379710.25	5530.00
482079.97	1379710.50	4367.00
482086.22	1379710.63	13709.00
482092.47	1379710.75	17392.00
482098.72	1379711.00	90910.00
482098.72	1379711.00	89127.00
482104.97	1379711.13	16394.00
482111.22	1379711.25	16484.00
482117.47	1379711.50	16130.00
482123.72	1379711.63	15037.00
482129.97	1379711.88	18073.00
482136.22	1379712.00	19119.00

TABLE C-19D
(Continued)

State Planer Coordinates		
North (ft)	East (ft)	Reading (CPM)
482142.47	1379712.13	18692.00
482148.69	1379712.38	27035.00
482148.69	1379712.38	31589.00
482154.94	1379712.50	24608.00
482161.19	1379712.63	26387.00
482167.44	1379712.88	44777.00
482173.69	1379713.00	15707.00
482179.94	1379713.25	17343.00
482186.19	1379713.38	14091.00
482192.44	1379713.50	15874.00
482198.69	1379713.75	13794.00
482198.69	1379713.75	14844.00
482204.94	1379713.88	17911.00
482211.19	1379714.00	15662.00
482217.44	1379714.25	21740.00
482223.69	1379714.38	17242.00
482229.91	1379714.50	19119.00
482236.16	1379714.75	11729.00
482242.41	1379714.88	16084.00
482248.66	1379715.13	12876.00
482248.66	1379715.13	12876.00
482073.56	1379716.50	4927.00
482298.66	1379716.50	11785.00
482073.88	1379722.75	5546.00
482079.81	1379716.75	4550.00
482086.06	1379716.88	14029.00
482092.31	1379717.00	18462.00
482098.56	1379717.25	17242.00
482104.81	1379717.38	19934.00

TABLE C-19D
(Continued)

State Planer Coordinates		
North (ft)	East (ft)	Reading (CPM)
482111.03	1379717.50	18073.00
482117.28	1379717.75	16217.00
482123.53	1379717.88	18462.00
482129.78	1379718.13	17008.00
482136.03	1379718.25	16055.00
482142.28	1379718.38	24194.00
482148.53	1379718.63	22568.00
482154.78	1379718.75	19879.00
482161.03	1379718.88	32009.00
482167.28	1379719.13	25975.00
482173.53	1379719.25	21277.00
482198.50	1379720.00	17008.00
482204.75	1379720.13	18462.00
482211.00	1379720.25	15968.00
482217.25	1379720.50	11977.00
482223.50	1379720.63	19672.00
482229.75	1379720.75	15874.00
482236.00	1379721.00	17046.00
482242.25	1379721.13	13334.00
482248.50	1379721.38	12858.00
482079.63	1379723.00	4725.00
472085.88	1379723.13	13393.00
472092.13	1379723.25	19481.00
472098.38	1379723.50	15585.00
482104.63	1379723.63	18634.00
482110.88	1379723.75	16217.00
472117.18	1379724.00	18938.00
482123.38	1379724.13	17868.00
482129.63	1379724.38	20135.00

TABLE C-19D
(Continued)

State Planer Coordinates		
North (ft)	East (ft)	Reading (CPM)
482135.88	1379724.50	15998.00
482142.13	1379724.63	25975.00
482148.38	1379274.88	18879.00
482154.59	1379725.00	24838.00
482160.00	1379725.13	21740.00
482167.09	1379725.38	17242.00
482173.34	1379725.50	14963.00
482198.34	1379726.25	14252.00
482204.59	1379726.38	13709.00
482210.84	1379726.50	15267.00
482214.09	1379726.75	24897.00
482223.34	1379726.88	18878.00
482229.59	1379727.00	12059.00
482235.81	1379727.25	13709.00
482242.06	1379727.38	24603.00
482248.31	1379727.63	14493.00
482073.22	1379729.00	5883.00
482079.47	1379729.25	4692.00
482085.72	1379729.38	13606.00
482091.97	1379729.50	14609.00
482098.22	1379729.75	156968.00
482104.47	1379729.88	15346.00
482110.72	1379730.00	19170.00
482116.94	13797930.25	16902.00
482123.19	1379730.38	18182.00
482129.44	1379730.63	17442.00
482135.69	1379730.75	25001.00
482141.94	1379730.88	23530.00
482148.19	1379731.13	18750.00

TABLE C-19D
(Continued)

State Planer Coordinates		
North (ft)	East (ft)	Reading (CPM)
482154.44	1379731.25	21479.00
482160.69	1379731.38	14609.00
482166.94	1379731.63	15626.00
482173.19	1379731.75	12749.00
482198.16	1379732.50	22305.00
482204.41	1379732.63	19672.00
482210.66	1379732.75	17752.00
482216.91	1379733.00	16305.00
482223.16	1379733.13	15832.00
482229.41	1379733.25	13709.00
482235.66	1379733.50	10990.00
482241.91	1379733.63	11300.00
482248.16	1379733.88	14128.00
482073.03	1379735.25	5241.00
482079.28	1379735.50	4744.00
482085.53	1379735.63	14029.00
482091.78	1379735.75	15916.00
482104.28	1379736.13	15666.00
482110.53	1379736.25	16760.00
482116.78	1379736.50	17868.00
482123.03	1379736.63	18462.00
482129.28	1379736.88	18998.00
482135.53	1379737.00	20762.00
482141.78	1379737.13	36810.00
482148.03	1379737.38	19058.00
482154.28	1379737.50	14052.00
482160.50	1379737.63	18751.00
481247.66	1379737.75	33497.00
482166.75	1379737.88	17658.00

TABLE C-19D
(Continued)

State Planer Coordinates		
North (ft)	East (ft)	Reading (CPM)
482173.00	1379738.00	15707.00
482198.00	1379738.75	21202.00
482204.25	1379738.88	20340.00
482210.50	1379739.00	16902.00
482216.75	1379739.25	15152.00
482223.00	1379739.38	15114.00
482229.25	1379739.50	11871.00
482235.50	1379739.75	12266.00
482241.72	1379739.88	14963.00
482247.97	1379740.13	11651.00
482297.97	1379741.38	11364.00
482072.88	1379741.50	5786.00
482079.13	1379741.75	4684.00
482085.38	1379741.88	11765.00
482091.63	1379742.00	15585.00
482097.88	1379742.25	14424.00
482104.13	1379742.38	16394.00
482110.38	1379742.50	17292.00
482116.59	1379742.75	19934.00
482122.84	1379742.88	17046.00
482129.09	1379743.00	17342.00
482135.34	1379743.25	20690.00
482141.59	1379743.38	23167.00
482147.84	1379743.63	12296.00
482154.09	1379743.75	16305.00
482160.34	1379743.88	21353.00
482166.59	1379744.13	23448.00
482172.84	1379744.25	25001.00
482297.78	1379747.63	11905.00

TABLE C-19D
(Continued)

State Planer Coordinates		
North (ft)	East (ft)	Reading (CPM)
482072.72	1379747.75	5737.00
482078.94	1379748.00	5051.00
482085.19	1379748.13	11517.00
482091.44	1379748.25	11905.00
482097.69	1379748.50	14185.00
482103.94	1379748.63	15464.00
482110.19	1379748.75	18073.00
482116.44	1379749.00	19878.00
482122.69	1379749.13	33509.00
482128.94	1379749.25	18674.00
482135.19	1379749.50	16950.00
482141.44	1379749.63	21353.00
482147.69	1379749.88	14741.00
482153.94	1379750.00	22140.00
482160.16	1379750.13	22141.00
482166.41	1379750.38	20135.00
482172.66	1379750.50	31915.00
482297.63	1379753.88	12245.00
482072.53	1379754.00	5764.00
482078.78	1379754.25	5204.00
482085.03	1379754.38	11729.00
482091.28	1379754.50	13216.00
482097.53	1379754.75	13166.00
482103.78	1379754.88	15707.00
482110.03	1379755.00	19934.00
482116.28	1379755.25	19293.00
482122.50	1379755.38	15707.00
482128.75	1379755.50	13899.00
482135.00	1379755.75	20762.00

TABLE C-19D
(Continued)

State Planer Coordinates		
North (ft)	East (ft)	Reading (CPM)
482141.25	1379755.88	16621.00
482147.50	1379756.13	17190.00
482153.75	1379756.25	26432.00
482160.00	1379756.38	15790.00
482166.25	1379756.63	17803.00
482172.50	1379756.75	17868.00
482297.44	1379760.13	13453.00
482072.38	1379760.25	4193.00
482078.63	1379760.38	4370.00
482084.84	1379760.63	11859.00
482091.09	1379760.75	14424.00
482097.34	1379761.00	12074.00
482097.34	1379761.00	13544.00
482103.59	1379761.13	16173.00
482109.84	1379761.25	17242.00
482116.09	1379761.50	17292.00
482122.34	1379761.63	15968.00
482128.59	1379761.75	16629.00
482134.84	1379762.00	16621.00
482141.09	1379762.13	17143.00
482147.34	1379762.38	16069.00
482147.34	1379762.38	17805.00
482147.34	1379762.38	16130.00
482153.59	1379762.50	15580.00
482159.84	1379762.63	17485.00
482166.06	1379762.88	14382.00
482172.31	1379763.00	15790.00
482197.31	1379763.63	14292.00
482247.28	1379765.00	11646.00

TABLE C-19D
(Continued)

State Planer Coordinates		
North (ft)	East (ft)	Reading (CPM)
482297.28	1379766.38	12766.00
482297.28	1379766.38	12016.00
482072.19	1379766.50	4773.00
482078.44	1379766.63	4992.00
482084.69	1379766.88	11451.00
482090.94	1379767.00	24391.00
482097.19	1379767.25	20135.00
482103.44	1379767.38	23810.00
482109.69	1379767.50	26786.00
482115.94	1379767.75	18182.00
482122.19	1379767.88	14706.00
482128.41	1379768.00	16667.00
482134.66	1379768.25	21201.00
482140.91	1379768.38	16449.00
482147.16	1379768.63	15916.00
482072.03	1379772.75	4333.00
482078.28	1379772.88	5910.00
482084.50	1379773.13	10456.00
482090.75	1379773.25	32269.00
482097.00	1379773.50	32787.00
482103.25	1379773.63	37048.00
482109.50	1379773.75	25652.00
482115.75	1379774.00	17342.00
482122.00	1379774.13	15832.00
482128.25	1379774.25	18405.00
482134.50	1379774.50	18692.00
482140.75	1379774.63	18019.00
482147.00	1379774.88	17095.00
482071.84	1379779.00	5001.00

TABLE C-19D
(Continued)

State Planer Coordinates		
North (ft)	East (ft)	Reading (CPM)
482078.09	1379779.13	6189.00
482084.34	1379779.38	8597.00
482090.59	1379779.50	15545.00
482096.84	1379779.75	33710.00
482103.09	1379779.88	24492.00
482109.34	1379780.00	18462.00
482115.59	1379780.25	26667.00
482121.84	1379780.38	15307.00
482128.09	1379780.50	15545.00
482134.31	1379780.75	18209.00
482140.56	1379780.88	28719.00
482146.81	1379781.00	16449.00
482071.69	1379785.25	5510.00
482077.94	1379785.38	5178.00
482084.19	1379785.63	14926.00
482090.41	1379785.75	17965.00
482096.66	1379786.00	34286.00
482102.91	1379786.13	26432.00
482109.16	1379786.25	22399.00
482115.41	1379786.50	17008.00
482121.66	1379786.63	178342.00
482127.91	1379786.75	15001.00
482134.16	1379787.00	17911.00
482140.41	1379787.13	11765.00
482146.66	1379787.25	11091.00
482221.63	1379789.38	14945.00
482227.88	1379789.50	14564.00
482234.13	1379789.75	13825.00
482240.38	1379789.88	17647.00

TABLE C-19D
(Continued)

State Planer Coordinates		
North (ft)	East (ft)	Reading (CPM)
482246.63	1379790.00	15968.00
482071.50	1379791.50	15790.00
482077.75	1379791.63	7076.00
482084.00	1379791.88	11473.00
482090.25	1379792.00	15076.00
482096.50	1379792.25	18634.00
482102.75	1379792.38	32978.00
482109.00	1379792.50	21583.00
482121.50	1379792.88	15907.00
482115.25	1379792.75	19231.00
482127.75	1379793.00	63830.00
482133.97	1379793.25	16173.00
482140.22	1379793.38	11451.00
482146.47	1379793.50	10870.00
482221.44	1379795.63	14714.00
482227.69	1379795.75	18751.00
482233.94	1379796.00	17965.00
482240.19	1379796.13	14456.00
482246.44	1379796.25	15076.00
482071.34	1379797.75	15874.00
482077.59	1379797.88	15626.00
482083.84	1379798.13	10381.00
482090.09	1379798.25	12270.00
482096.31	1379798.38	19119.00
482102.56	1379798.63	20629.00
482108.81	1379798.75	18687.00
482115.06	1379799.00	15251.00
482121.31	1379799.13	17752.00
482127.56	1379799.25	14635.00

TABLE C-19D
(Continued)

State Planer Coordinates		
North (ft)	East (ft)	Reading (CPM)
482133.81	1379799.50	20271.00
482140.06	1379799.63	11195.00
482146.31	1379799.75	12279.00
482221.28	1379801.88	16217.00
482227.53	1379802.00	13423.00
482233.78	1379802.25	16394.00
482240.03	1379802.38	16305.00
482246.28	1379802.50	17493.00
482071.16	1379804.00	20271.00
482077.41	1379804.13	17596.00
482083.66	1379804.38	11289.00
482089.91	1379804.50	10890.00
482096.16	1379804.63	11268.00
482102.41	1379804.88	12876.00
482108.66	1379805.00	17966.00
482114.91	1379805.25	19486.00
482121.16	1379805.38	15425.00
482127.41	1379805.50	17094.00
482133.66	1379805.75	13101.00
482139.88	1379805.88	12196.00
482146.13	1379806.00	13637.00
482221.09	1379808.13	12059.00
482227.34	1379808.25	10079.00
482233.59	1379808.50	9918.00
482239.84	1379808.63	13678.00
482246.09	1379808.75	13101.00
482077.25	1379810.38	16713.00
482083.50	1379810.63	14815.00
482089.75	1379810.75	13730.00

TABLE C-19D
(Continued)

State Planer Coordinates		
North (ft)	East (ft)	Reading (CPM)
482096.00	1379810.88	12346.00
482096.00	1379810388	12930.00
482102.22	1379811.13	13954.00
482108.47	1379811.25	14608.00
482114.72	1379811.50	23716.00
482120.97	1379811.63	15874.00
482127.22	1379811.75	19481.00
482133.47	1379812.00	12998.00
482139.72	1379812.13	12749.00
482145.97	1379812.25	12474.00
482145.97	1379812.25	12099.00
482152.22	1379812.50	12833.00
482158.47	1379812.63	12932.00
482164.72	1379812.75	11585.00
482170.97	1379813.00	9928.00
482195.94	1379813.63	10286.00
482220.94	1379814.38	11153.00
482227.19	1379814.50	10249.00
482233.44	1379814.75	9660.00
482239.69	1379814.88	16173.00
482245.94	1379815.00	10640.00
482295.91	1379816.38	12773.00
482245.94	1379815.00	13825.00
482120.81	1379817.88	9977.00
482127.06	1379818.00	10001.00
482133.31	1379818.25	12528.00
482139.56	1379818.38	11517.00
482145.78	1379818.50	12969.00
482152.03	1379818.75	15566.00

TABLE C-19D
(Continued)

State Planer Coordinates		
North (ft)	East (ft)	Reading (CPM)
482158.28	1379818.88	12321.00
482164.53	1379819.00	13954.00
482170.78	1379819.25	11674.00

TABLE C-19E

SOLID WASTE LANDFILL
CIS EXPOSURE RATE MEASUREMENTS
OPERABLE UNIT 2 REMEDIAL INVESTIGATION
FERNALD ENVIRONMENTAL MANAGEMENT PROJECT

Coordinates		
North	East	Reading (microR/HR)
482097.34	1379761.00	16.00
482097.34	1379761.00	17.40
482202.78	1379563.75	16.02
482197.31	1379763.63	16.59

TABLE C-19F

SOLID WASTE LANDFILL
CIS BETA GAMMA DOSE RATE MEASUREMENTS
OPERABLE UNIT 2 REMEDIAL INVESTIGATION
FERNALD ENVIRONMENTAL MANAGEMENT PROJECT

Coordinates		
North	East	Reading (microR/HR)
482152.81	1379562.38	0.04
482102.81	1379561.00	0.03
482101.47	1379611.00	0.20
482100.09	1379661.00	0.13
482098.72	1379711.00	1.26
482097.34	1379761.00	0.13
482195.94	1379813.63	0.08
482145.97	1379812.25	0.09
482096.00	1379810.88	0.12
482302.75	1379566.50	0.04
482252.78	1379565.13	0.07
482202.78	1379563.75	0.06
482301.38	1379616.50	0.06
482201.41	1379613.75	0.05
482151.44	1379612.38	0.06
482300.00	1379666.50	0.05
482250.03	1379665.13	0.04
482200.06	1379663.75	0.04
482150.06	1379662.38	0.06
482298.66	1379716.50	0.05
482248.66	1379715.13	0.03
482198.69	1379713.75	0.04
482148.69	1379712.38	0.13
482297.28	1379766.38	0.05
482247.28	1379765.00	0.04
482197.31	1379763.63	0.07
482147.34	1379762.38	0.09
482295.91	1379816.38	0.05
482245.94	1379815.00	0.07

FIGURE C-19A

SOLID WASTE LANDFILL
CIS FIDLER MEASUREMENT CONTOURS
OPERABLE UNIT 2 REMEDIAL INVESTIGATION
FERNALD ENVIRONMENTAL MANAGEMENT PROJECT

(Contour intervals at 50,000 and 75,000 CPM)

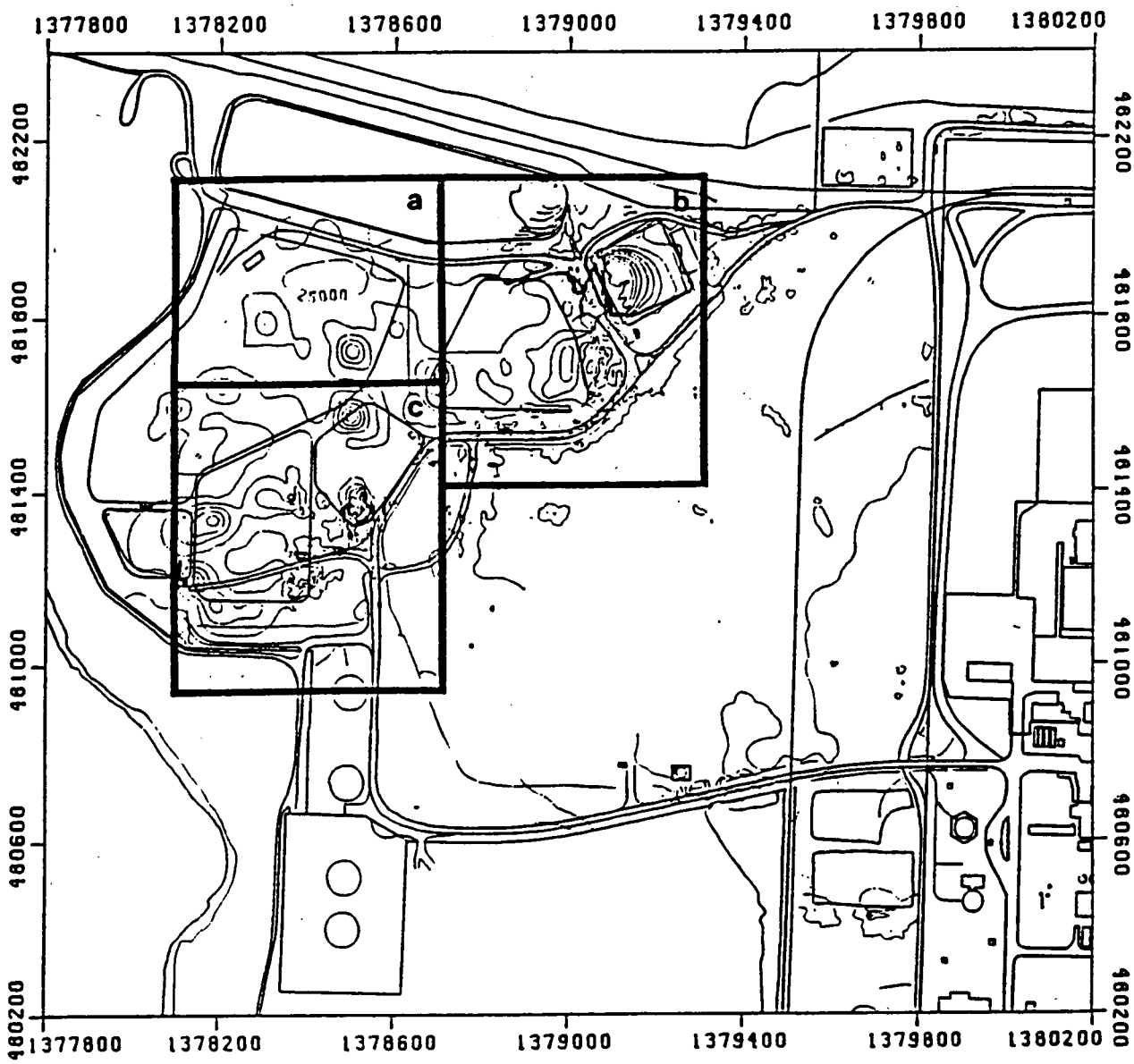

FIGURE C-19B

SOLID WASTE LANDFILL
CIS EXPOSURE RATE CONTOURS
OPERABLE UNIT 2 REMEDIAL INVESTIGATION
FERNALD ENVIRONMENTAL MANAGEMENT PROJECT

(Contour intervals at 1.0 and 20.0 microR/hr)

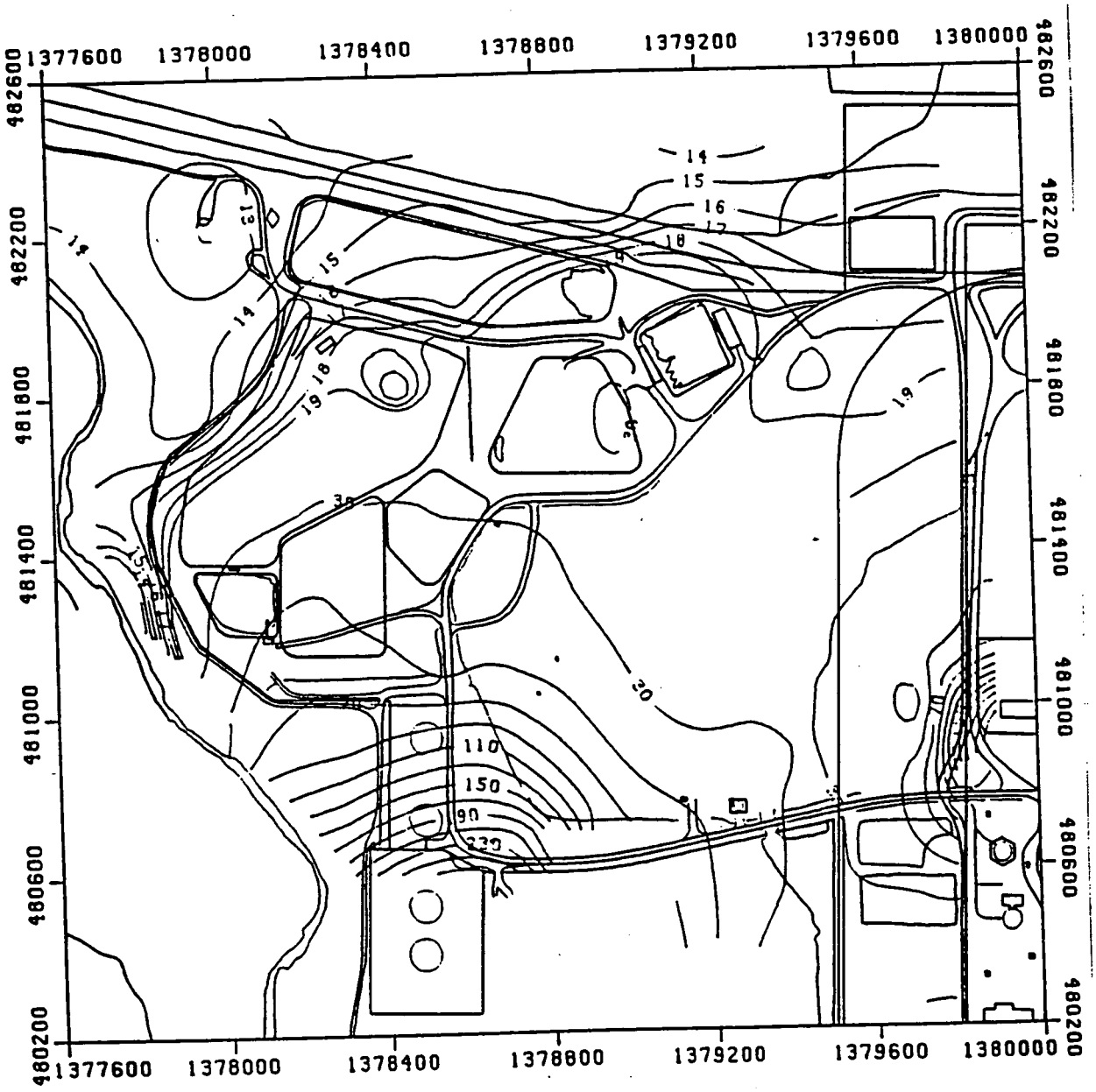

FIGURE C-19C

SOLID WASTE LANDFILL
CIS BETA GAMMA DOSE RATE CONTOURS
OPERABLE UNIT 2 REMEDIAL INVESTIGATION
FERNALD ENVIRONMENTAL MANAGEMENT PROJECT

(Contour intervals at 0.2, 1.0, and 5.0 mRad/hr)

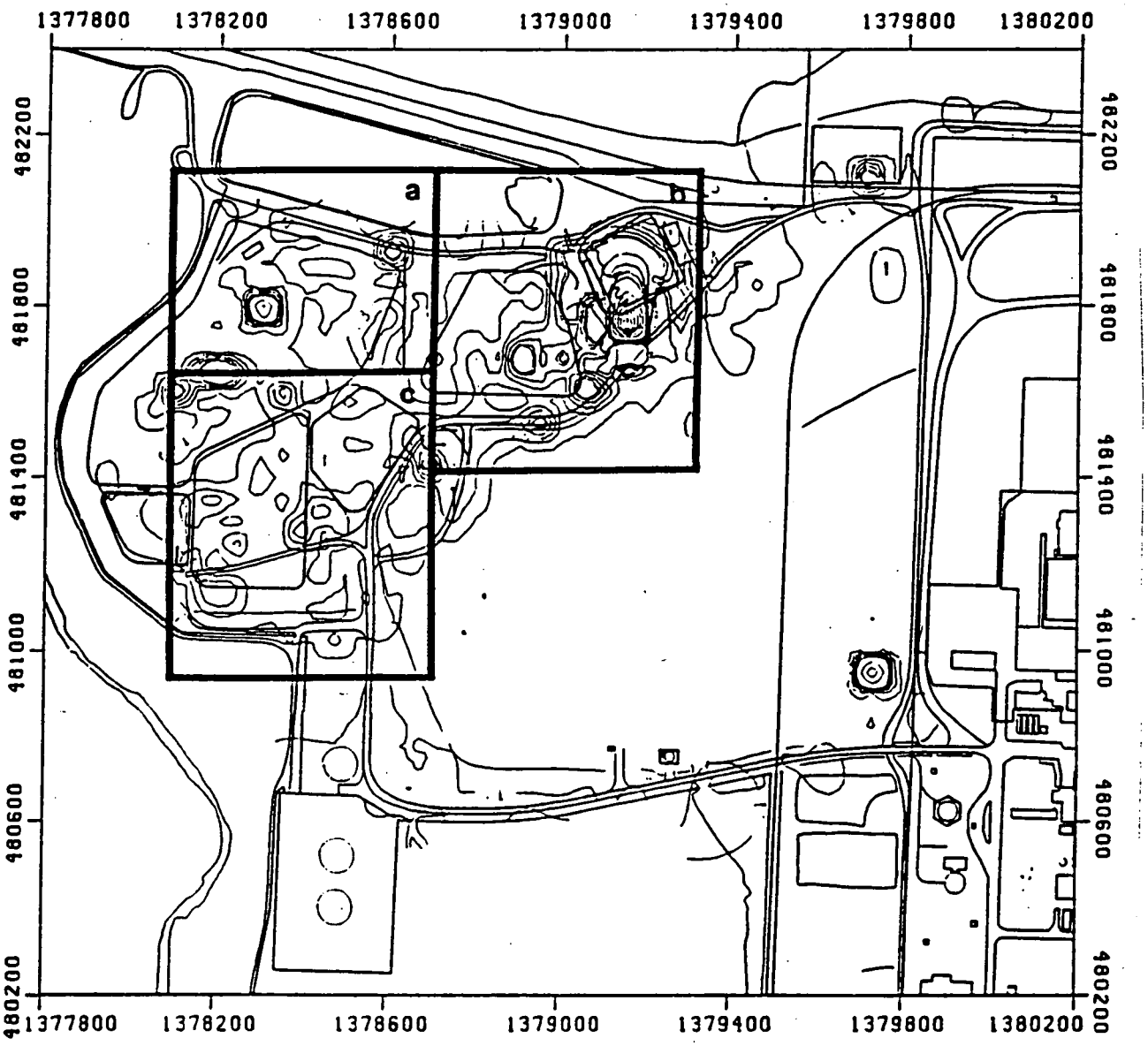

TABLE C-20

TABLE C-20A

SOLID WASTE LANDFILL
GEOTECHNICAL ANALYSIS
PHASE I FIELD INVESTIGATION
OPERABLE UNIT 2 REMEDIAL INVESTIGATION
FERNALD ENVIRONMENTAL MANAGEMENT PROJECT

SURFACE SAMPLES

Location	Wet Density (pcf)[a]	Dry Density (pcf)	Moisture Content (%)
#9	114.4	106.7	7.2
#10	118.6	107.5	10.3
#11	110.1	102.7	7.2

[a]pounds per cubic foot

TABLE C-20B

SOLID WASTE LANDFILL
GEOTECHNICAL ANALYSIS
PHASE II FIELD INVESTIGATION
OPERABLE UNIT 2 REMEDIAL INVESTIGATION
FERNALD ENVIRONMENTAL MANAGEMENT PROJECT

Location	Sample No.	Date Sampled	Sample Interval (ft)[a]	Specific Gravity	Moisture Content (%)	Bulk Density Unit Weight (pcf)[b]	Dry Density (pcf)	Atterberg Limits			Permeability (cm/s)[c]
								Liquid Limit	Plastic Limit	Plasticity Index	
SWL-SS-02	111499	4/19/93	0.0-0.5	-[d]	24.3	-	-	-	-	-	-
1947	111639	5/11/93	6.0-8.0	-	-	125.3	103.4	-	-	-	-
	111640	5/11/93	8.0-10.0	2.7243	26.4	-	-	38	15	23	-
1950	111683	5/11/93	4.0-6.0	2.7464	13.1	-	-	20	14	6	-
	115270	5/11/93	10.0-12.0	2.7090	12.7	-	-	20	14	6	-
	111682	5/11/93	2.0-4.0	-	-	127.0	105.3	-	-	-	-
	115269	5/11/93	8.0-10.0	-	-	137.1	118.9	-	-	-	-
1952	111658	5/11/93	4.0-6.0	-	-	141.4	123.0	-	-	-	-
	111659	5/11/93	6.0-8.0	2.6513	28	-	-	27	15	12	-
	111670	5/11/93	14.0-16.0	2.7384	12.1	-	-	32	15	17	-
1982	111485	5/11/93	0.0-2.0	2.2921	17.1	-	-	32	15	17	-
1983	111474	5/11/93	5.0-7.0	-	-	130.4	107.9	-	-	-	$2.1E^{-8}$
	111481	5/11/93	17.5-20.0	2.7422	10.5	-	-	20	12	8	-
1984	111462	5/11/93	5.0-7.0	-	-	135.9	118.1	-	-	-	-
	111463	5/11/93	0.0-2.5	2.2350	16.9	-	-	30	16	14	-
	111467	5/11/93	7.5-10.0	2.6310	23.5	-	-	40	21	19	-
1986	111459	4/30/93	12.5-15.0	2.7533	20.0	-	-	27	16	11	-
	111461	4/30/93	15.0-17.0	-	-	139.9	121.5	-	-	-	$1.1E^{-7}$

See footnotes at end of table

FER\CRU2RI\JLG\APP-C\TABC-20B\January 5, 1995 6:03pm

000122

TABLE C-20B
(Continued)

Location	Sample No.	Date Sampled	Sample Interval (ft)[a]	Specific Gravity	Moisture Content (%)	Bulk Density Unit Weight (pcf)[b]	Dry Density (pcf)	Atterberg Limits			Permeability (cm/s)[c]
								Liquid Limit	Plastic Limit	Plasticity Index	
1988	115354	5/12/93	15.0-17.5	2.7347	15.9	-	-	25	15	10	-
	115355	5/12/93	20.0-22.0	-	-	134.0	119.6	-	-	-	-
1989	115364	5/14/93	7.5-10.0	2.7445	14.6	-	-	26	15	11	-
	115368	5/14/93	10.0-12.0	-	-	137.1	121.7	-	-	-	-
1990	115324	5/10/93	3.0-5.0	-	-	130.7	112.5	-	-	-	-
	115325	5/10/93	10.0-12.0	-	-	142.3	123.3	-	-	-	-
	115326	5/10/93	20.0-22.0	-	-	141.2	123.7	-	-	-	$3.0E^{-8}$
	115327	5/10/93	1.0-3.0	2.7209	8.5	-	-	30	17	13	-
	115330	5/10/93	6.0-9.0	2.7103	17.3	-	-	27	15	12	-
	115332	5/10/93	9.0-10.0	2.7220	21.9	-	-	30	15	15	-
	115336	5/10/93	17.5-20.0	2.7349	9.7	-	-	18	11	7	-
1992	115344	5/11/93	7.5-10.0	2.6979	17.4	-	-	30	15	15	-
	115348	5/11/93	3.0-5.0	-	-	139.4	118.6	-	-	-	-
2949	111194	3/26/93	4.0-6.0	2.7668	18.8	-	-	32	16	16	-
	111194	3/26/93	4.0-6.0	2.7668	18.8	-	-	25	15	10	-
	111207	3/26/93	14.0-16.0	2.7368	13.6	-	-	19	12	7	-

[a]The sample interval is depth, in feet, below the ground surface

[b]Pounds per cubic foot

[c]Centimeters per second

[d]Sample not analyzed for this parameter

TABLE C-20C

SOLID WASTE LANDFILL
SIEVE ANALYSIS - ASTM D 422
PHASE II FIELD INVESTIGATION
OPERABLE UNIT 2 REMEDIAL INVESTIGATION
FERNALD ENVIRONMENTAL MANAGEMENT PROJECT

Location	Sample No.	Date Sampled	Sample Interval (ft)[a]	Classification[b]	Sieve Analysis (% Passing Sieve No.)											
					3"	1.5"	0.75"	0.375"	#4	#10	#20	#40	#60	#100	#140	#200
SWL-SD-02	111500	4/19/93	0.0-0.5	NA[c]	100	100	98.7	92.7	82.6	71.8	60.4	49.4	41.1	35.1	32.6	31.0
SWL-SS-02	11499	4/19/93	0.0-0.5	NA	100	100	98.8	97.3	96.5	93.8	88.9	84.7	80.9	77.3	75.5	74.2
1947	111640	5/11/93	8.0-10.0	CL	100	100	100	100	100	99.8	99.6	99.0	98.1	97.0	96.3	95.8
1950	111683	5/11/93	4.0-6.0	CL-ML	100	100	100	100	99.5	98.4	94.6	90.3	86.1	80.7	77.3	74.4
	115270	5/11/93	10.0-12.0	CL-ML	100	100	100	100	99.8	99.3	97.9	95.8	92.9	88.9	85.7	82.5
1952	111659	5/11/93	6.0-8.0	CL	100	100	95.2	91.5	86.7	78.5	73.0	68.3	63.5	57.6	53.9	50.9
	111670	5/11/93	14.0-16.0	CL	100	100	92.7	91.4	90.2	87.2	83.4	79.9	76.9	73.9	72.0	70.5
1982	111485	5/11/93	0.0-2.5	CL	100	100	100	99.1	96.2	93.5	89.3	84.7	81.0	77.1	74.9	73.1
1983	111481	5/11/93	17.5-20.0	CL-ML	100	100	96.5	94.7	91.1	86.3	79.7	73.4	68.3	62.9	59.9	57.5
1984	111463	5/11/93	0.0-2.5	CL	100	100	100	99.5	99.2	98.4	97.1	95.4	93.7	91.8	90.5	89.4
	111467	5/11/93	7.5-10.0	CL	100	100	100	100	99.2	98.2	97.0	94.9	91.5	87.2	84.5	82.3
1986	111459	4/30/93	12.5-15.0	CL	100	100	100	100	100	100	93.8	89.2	85.9	82.2	80.5	79.0
1988	115354	5/12/93	15.0-17.5	CL	100	100	84.1	75.7	68.0	62.9	62.7	62.2	61.4	60.4	59.7	59.0
1989	115364	5/14/93	7.5-10.0	CL	100	100	100	100	98.9	96.9	92.0	87.0	83.3	79.1	77.1	75.4
1990	115330	5/10/93	6.0-9.0	CL	100	81.1	77.3	75.8	72.6	68.8	63.7	60.3	57.6	54.4	52.7	51.2
	115332	5/10/93	9.0-10.0	CL	100	100	98.1	97.2	94.2	91.1	86.7	82.3	78.2	74.4	72.0	70.2
	115336	5/10/93	17.5-20.0	CL-ML	100	100	97.4	93.6	86.6	79.3	71.6	63.5	56.2	49.1	45.6	43.3
1992	115344	5/11/93	7.5-10.0	CL	100	100	100	97.1	92.1	88.0	83.3	78.8	74.8	71.2	69.2	67.7

See footnotes at end of table

FER\CRU2RI\JLG\APP-C\TABC-20C\January 5, 1995 6:04pm

000514

TABLE C-20C
(Continued)

Location	Sample No.	Date Sampled	Sample Interval (ft)[a]	Classification[b]	Sieve Analysis (% Passing Sieve No.)											
					3"	1.5"	0.75"	0.375"	#4	#10	#20	#40	#60	#100	#140	#200
2949	111194	3/26/93	4.0-6.0	CL	100	100	100	100	99.7	98.5	94.8	91.9	88.9	85.3	83.0	81.3
	111194	3/26/93	4.0-6.0	CL	100	100	100	99.9	99.5	98.6	96.0	93.0	89.6	85.6	83.0	80.7
	111207	3/26/93	14.0-16.0	CL-ML	100	100	99.0	99.0	98.3	96.2	92.0	88.3	84.2	78.8	74.9	71.6
	111207	3/26/93	14.0-16.0	NA	100	100	100	100	99.5	98.2	96.5	94.3	91.2	86.7	83.5	80.7

[a]The sample interval is depth, in feet, below the ground surface

[b]Unified Soil Classification System

ML = inorganic silts and very fine sands, rock flour, silty or clayey fine sands, or clayey silts with slight plasticity

CL = inorganic clays of low to medium plasticity, gravelly clays, sandy clays, silty clays, lean clays

[c]NA = Not applicable

TABLE C-20D

SOLID WASTE LANDFILL
HYDROMETER ANALYSIS - ASTM D 422
PHASE II FIELD INVESTIGATION
OPERABLE UNIT 2 REMEDIAL INVESTIGATION
FERNALD ENVIRONMENTAL MANAGEMENT PROJECT

LOCATION: SWL-SD-02 SAMPLE NO.: 111500 DEPTH: 0.0-0.5 ft.

Particle Diameter (mm)	0.06521	0.04747	0.03430	0.02223	0.01312	0.00937	0.00567	0.00468	0.00330	0.00141
Percent Finer	31.5	26.0	21.2	15.8	11.0	8.2	7.5	5.5	4.1	4.1

LOCATION: SWL-SS-02 SAMPLE NO.: 111499 DEPTH: 0.0-0.5 ft.

Particle Diameter (mm)	0.05782	0.04198	0.03014	0.02106	0.01288	0.00921	0.00650	0.00463	0.00326	0.00140
Percent Finer	73.4	67.6	64.7	38.6	21.2	17.4	13.5	11.6	10.6	7.7

LOCATION: 1947 SAMPLE NO.: 111640 DEPTH: 8.0-10.0 ft.

Particle Diameter (mm)	0.02441	0.01646	0.01035	0.00759	0.00558	0.00406	0.00287	0.00126
Percent Finer	84.2	75.5	62.0	53.2	46.1	39.7	35.0	20.7

LOCATION: 1950 SAMPLE NO.: 111683 DEPTH: 4.0-6.0 ft.

Particle Diameter (mm)	0.05628	0.04170	0.03132	0.02219	0.01299	0.00920	0.00652	0.00462	0.00321	0.00139
Percent Finer	74.3	64.3	48.2	12.1	8.0	7.0	6.0	5.0	4.0	4.0

TABLE C-20D
(Continued)

LOCATION: 1950 SAMPLE NO.: 115270 DEPTH: 10.0-12.0 ft.

Particle Diameter (mm)	0.05081	0.03803	0.02948	0.02188	0.01281	0.00912	0.00647	0.00459	0.00319	0.00138
Percent Finer	80.2	70.9	54.0	14.4	10.1	8.4	7.6	6.8	5.1	5.1

LOCATION: 1952 SAMPLE NO.: 111659 DEPTH: 6.0-8.0 ft.

Particle Diameter (mm)	0.05698	0.04212	0.03052	0.02002	0.01245	0.00900	0.00643	0.00458	0.00319	0.00135
Percent Finer	49.4	42.8	38.9	32.3	17.8	13.2	10.5	9.2	7.9	4.0

LOCATION: 1952 SAMPLE NO.: 111670 DEPTH: 14.0-16.0 ft.

Particle Diameter (mm)	0.05441	0.03958	0.02874	0.02066	0.01256	0.00896	0.00638	0.00450	0.00315	0.00133
Percent Finer	70.5	65.4	60.2	31.0	16.3	13.8	12.0	11.2	9.5	5.2

LOCATION: 1982 SAMPLE NO.: 111485 DEPTH: 0.0-2.5 ft.

Particle Diameter (mm)	0.05919	0.04369	0.03197	0.02109	0.01324	0.00971	0.00696	0.00491	0.00347	0.00148
Percent Finer	80.9	73.0	66.8	58.0	35.2	26.4	22.0	19.3	16.7	10.5

LOCATION: 1983 SAMPLE NO.: 111481 DEPTH: 17.5-20.0 ft.

Particle Diameter (mm)	0.05603	0.04121	0.03079	0.02249	0.01326	0.00941	0.00657	0.00466	0.00324	0.00134
Percent Finer	55.7	51.4	42.1	11.4	6.4	5.7	5.7	4.3	3.6	2.1

TABLE C-20D
(Continued)

LOCATION: 1984 SAMPLE NO.: 111463 DEPTH: 0.0-2.5 ft.

Particle Diameter (mm)	0.05958	0.04358	0.03172	0.02083	0.01276	0.00931	0.00678	0.00491	0.00343	0.00148
Percent Finer	98.0	90.4	84.0	75.4	59.2	49.5	40.9	33.4	30.1	18.3

LOCATION: 1984 SAMPLE NO.: 111467 DEPTH: 7.5-10.0 ft.

Particle Diameter (mm)	0.05708	0.04170	0.03025	0.01970	0.01195	0.00870	0.00627	0.00450	0.00317	0.00141
Percent Finer	79.4	72.3	66.2	59.1	44.8	36.7	30.6	25.5	20.4	14.3

LOCATION: 1986 SAMPLE NO.: 111459 DEPTH: 12.5-15.0 ft.

Particle Diameter (mm)	0.05398	0.04019	0.03177	0.02201	0.01303	0.00929	0.00663	0.00464	0.00320	0.00138
Percent Finer	74.5	64.1	39.8	15.6	8.7	6.1	3.5	2.6	0.9	0.9

LOCATION: 1988 SAMPLE NO.: 115354 DEPTH: 15.0-17.5 ft.

Particle Diameter (mm)	0.05827	0.04271	0.03138	0.02265	0.01321	0.00941	0.00668	0.00468	0.00321	0.00139
Percent Finer	48.9	43.5	36.7	9.5	6.8	5.4	4.1	3.4	2.7	2.7

LOCATION: 1989 SAMPLE NO.: 115364 DEPTH: 7.5-10.0 ft.

Particle Diameter (mm)	0.03825	0.02819	0.02082	0.01284	0.00918	0.00654	0.00455	0.00312	0.00138
Percent Finer	71.5	65.0	32.5	16.2	13.0	11.4	10.6	8.1	6.5

TABLE C-20D
(Continued)

LOCATION: 1990 SAMPLE NO.: 115330 DEPTH: 6.0-9.0 ft.

Particle Diameter (mm)	0.05535	0.04001	0.02889	0.01946	0.01219	0.00880	0.00629	0.00450	0.00316	0.00136
Percent Finer	48.8	45.7	42.5	33.1	18.1	13.8	11.3	9.4	8.8	6.9

LOCATION: 1990 SAMPLE NO.: 115332 DEPTH: 9.0-10.0 ft.

Particle Diameter (mm)	0.05504	0.03979	0.02904	0.01910	0.01193	0.00864	0.00620	0.00444	0.00312	0.00135
Percent Finer	67.9	62.8	56.9	49.2	30.6	23.8	19.5	16.1	15.3	11.0

LOCATION: 1990 SAMPLE NO.: 115336 DEPTH: 17.5-20.0 ft.

Particle Diameter (mm)	0.05984	0.04312	0.03214	0.02250	0.01303	0.00925	0.00656	0.00465	0.00326	0.00139
Percent Finer	42.0	38.5	28.0	5.6	4.2	3.5	2.8	2.1	2.1	2.1

LOCATION: 1992 SAMPLE NO.: 115344 DEPTH: 10.0-12.5 ft.

Particle Diameter (mm)	0.04089	0.02984	0.01990	0.01226	0.00898	0.00639	0.00457	0.00311	0.00134
Percent Finer	64.5	58.4	47.1	31.4	20.9	15.7	13.1	10.5	5.2

LOCATION: 2949 SAMPLE NO.: 111194 DEPTH: 4.0-6.0 ft.

Particle Diameter (mm)	0.05074	0.03666	0.02682	0.01825	0.01220	0.00916	0.00659	0.00458	0.00321	0.00133
Percent Finer	77.8	74.9	70.5	60.2	33.0	19.1	15.4	13.2	10.3	3.7

TABLE C-20D
(Continued)

LOCATION: 2949 SAMPLE NO.: 111194 DEPTH: 4.0-6.0 ft.

Particle Diameter (mm)	0.05185	0.03718	0.02735	0.01836	0.01246	0.00728	0.00602	0.00460	0.00323	0.00133
Percent Finer	75.7	74.2	68.2	59.3	28.9	13.4	12.6	11.1	8.9	3.7

LOCATION: 2949 SAMPLE NO.: 111207 DEPTH: 14.0-16.0 ft.

Particle Diameter (mm)	0.05531	0.04234	0.03545	0.02398	0.01396	0.00987	0.00683	0.00483	0.00336	0.00135
Percent Finer	67.9	55.5	23.4	6.6	4.4	4.4	3.6	3.6	2.2	2.2

LOCATION: 2949 SAMPLE NO.: 111207 DEPTH: 14.0-16.0 ft.

Particle Diameter (mm)	0.05135	0.03825	0.03138	0.02200	0.01380	0.00971	0.00681	0.00502	0.00341
Percent Finer	74.7	67.2	41.8	18.7	9.7	6.7	6.7	6.0	4.5

000520

TABLE C-20E

SOLID WASTE LANDFILL
ONE DIMENSIONAL CONSOLIDATION - ASTM D 2435
PHASE II FIELD INVESTIGATION
OPERABLE UNIT 2 REMEDIAL INVESTIGATION
FERNALD ENVIRONMENTAL MANAGEMENT PROJECT

LOCATION: 1984 SAMPLE NO.: 111462 DEPTH: 2.5-5.0 ft.

Applied Pressure (tsf)	0.13	0.25	0.50	1.00	2.00	4.00	8.00	16.00	8.00	4.00	2.00	1.00	0.25
Void Ratio	0.5406	0.5350	0.5218	0.4999	0.4676	0.4273	0.3835	0.3361	0.3414	0.3484	0.3578	0.3680	0.3915

LOCATION: 1984 SAMPLE NO.: 111463 DEPTH: 0.0-2.5 ft.

Applied Pressure (tsf)	0.13	0.25	0.50	1.00	2.00	4.00	8.00	16.00	8.00	4.00	2.00	1.00	0.25
Void Ratio	0.4261	0.4241	0.4174	0.4046	0.3874	0.3652	0.3381	0.3060	0.3261	0.3312	0.3381	0.3455	0.3634

LOCATION: 1990 SAMPLE NO.: 115326 DEPTH: 20.0-22.0 ft.

Applied Pressure (tsf)	0.13	0.25	0.50	1.00	2.00	4.00	8.00	16.00	8.00	4.00	2.00	1.00	0.25
Void Ratio	0.3919	0.3871	0.3769	0.3611	0.3387	0.3053	0.2696	0.2337	0.2376	0.2425	0.2447	0.2542	0.2705

FIGURE C-20A

SOLID WASTE LANDFILL
UNCONFINED CONPRESSIVE STRENGTH RESULTS - ASTM D 1266
OPERABLE UNIT 2 REMEDIAL INVESTIGATION
FERNALD ENVIRONMENTAL MANAGEMENT PROJECT

LOCATION: 1947 SAMPLE NUMBER: 111639 DEPTH: 6.0-8.0 ft.
LENGTH: 5.5703 in. DIAMETER: 2.8600 in. WEIGHT: 1176.8 g
STRAIN AT FAILURE: 11.0% STRESS AT FAILURE: 12.2 pounds per square inch

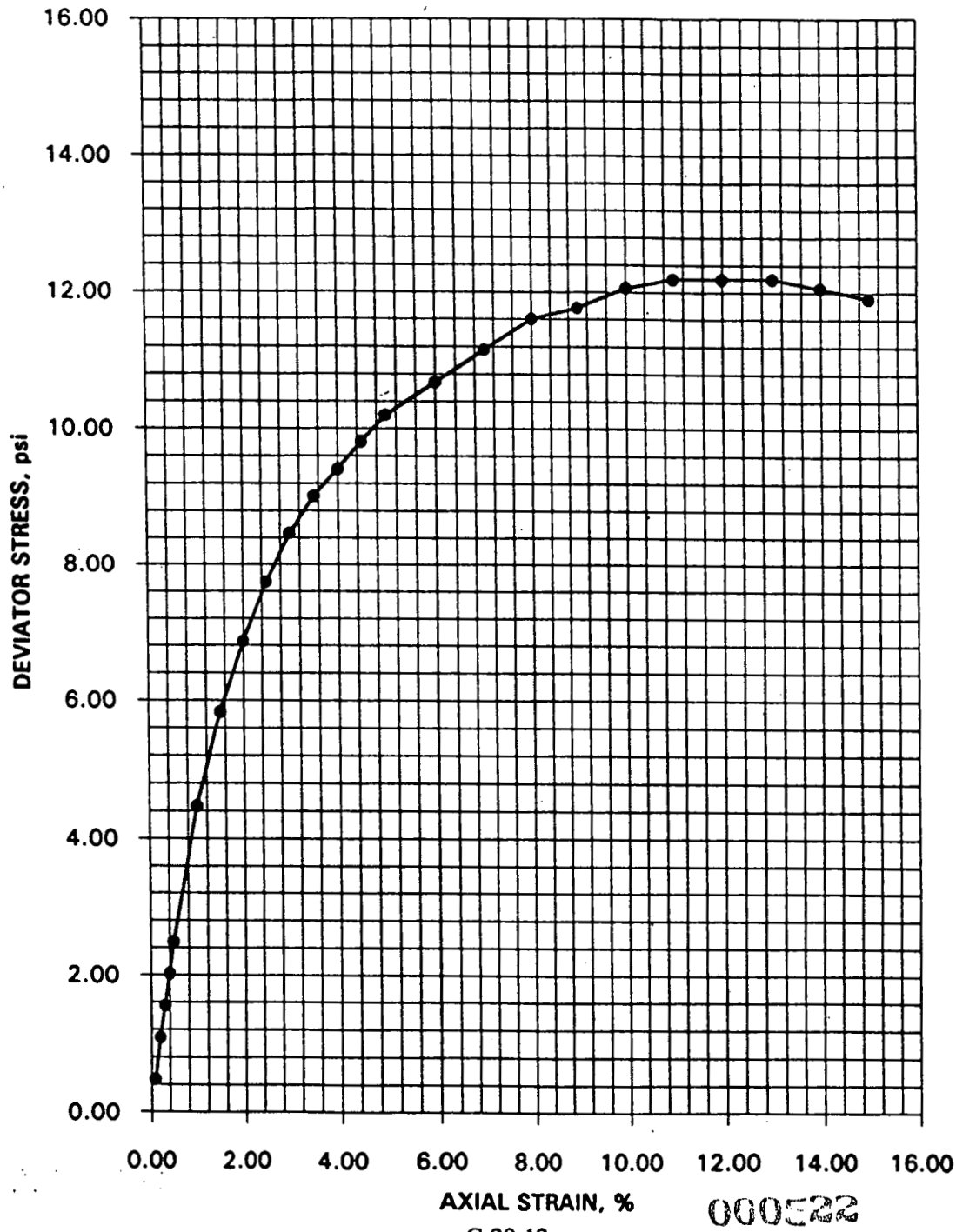

000522

FIGURE C-20B

(Continued)

LOCATION: 1950 SAMPLE NUMBER: 111682 DEPTH: 2.0-4.0 ft.
LENGTH: 5.5855 in. DIAMETER: 2.8650 in. WEIGHT: 1200.2 g
STRAIN AT FAILURE: 4.5% STRESS AT FAILURE: 14.1 pounds per square inch

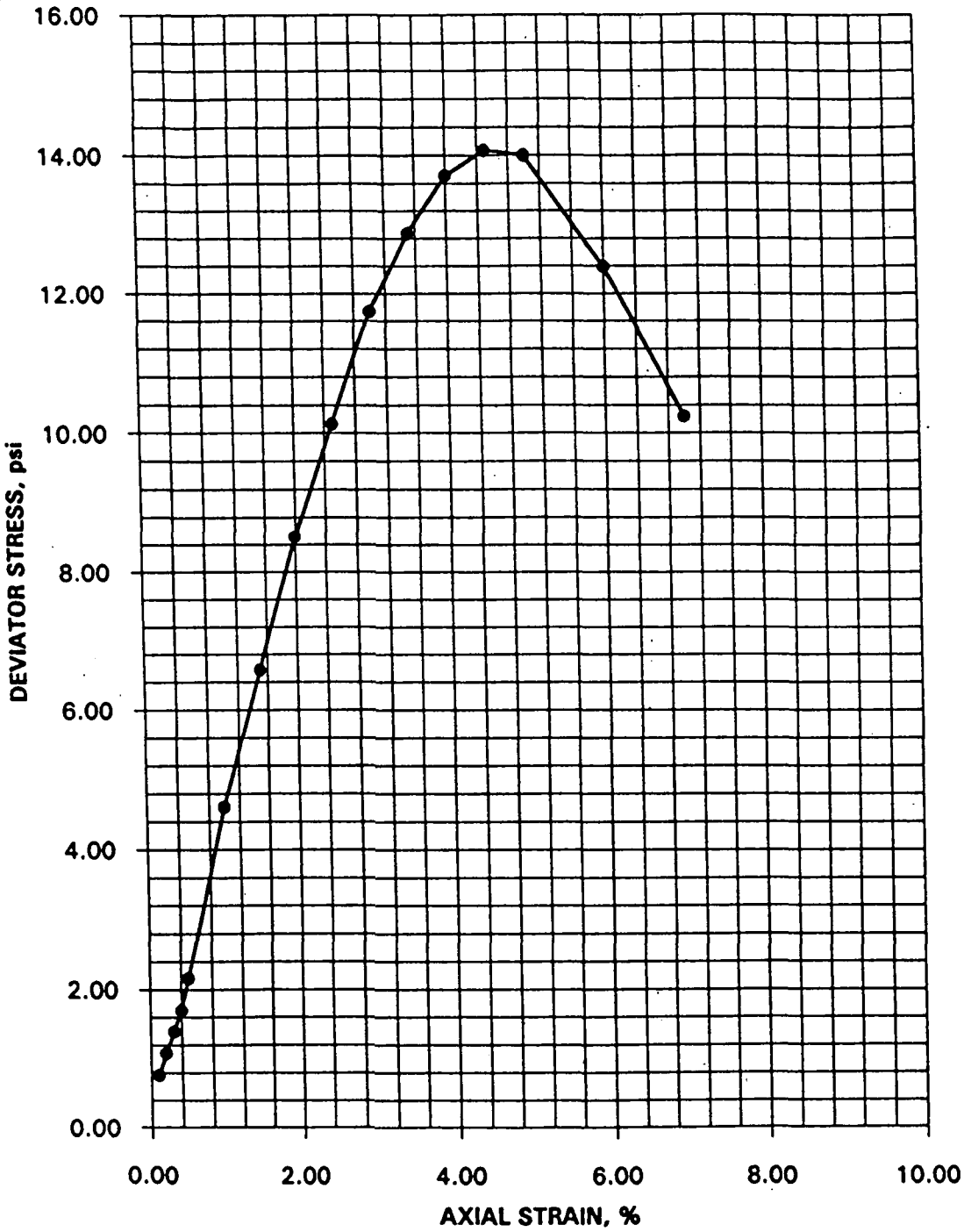

FIGURE C-20C
(Continued)

LOCATION: 1950 SAMPLE NUMBER: 115269 DEPTH: 8.0-10.0 ft.
LENGTH: 5.5743 in. DIAMETER: 2.8577 in. WEIGHT: 1286.39 g
STRAIN AT FAILURE: 8.0% STRESS AT FAILURE: 50.0 pounds per square inch

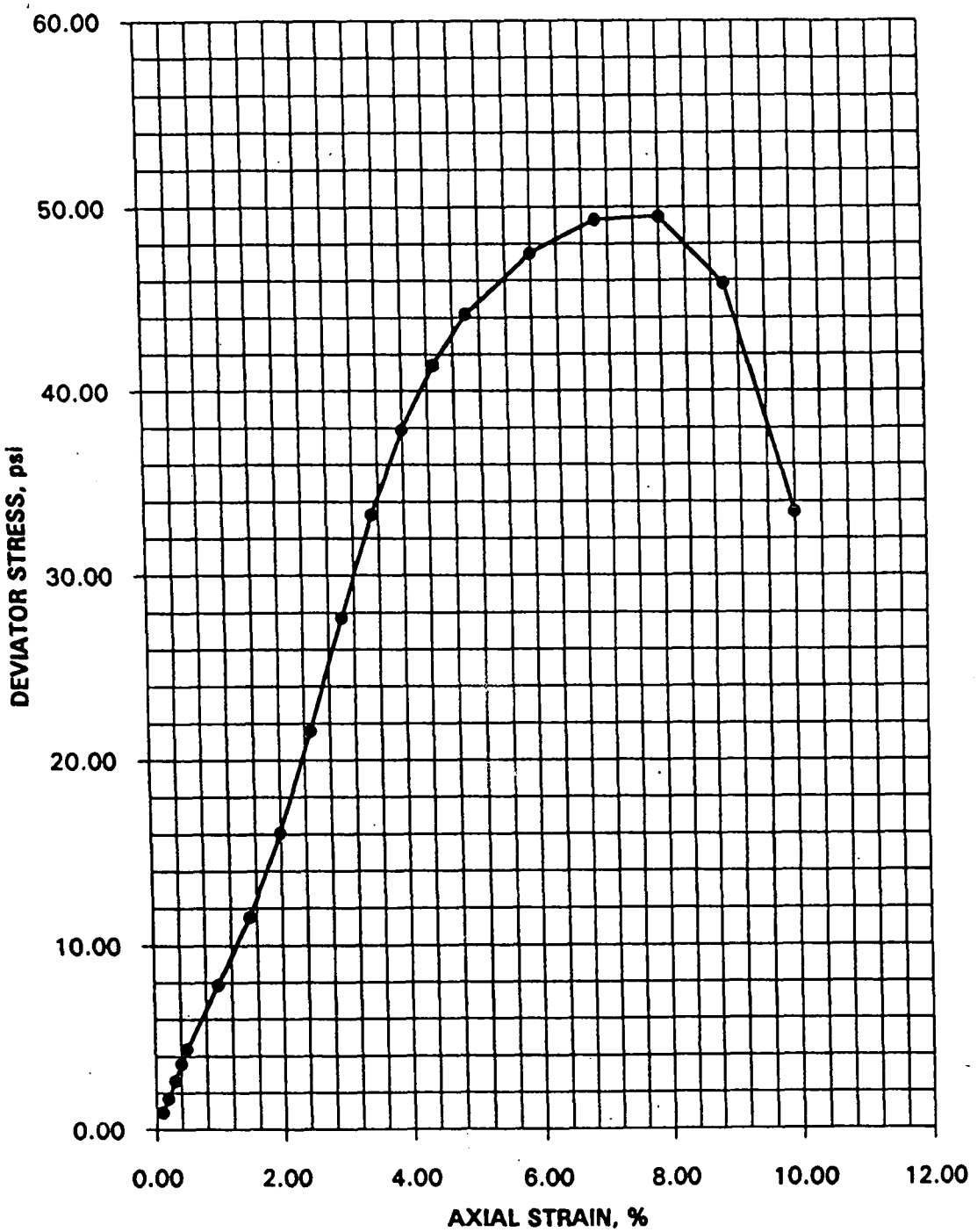

000524

FIGURE C-20D
(Continued)

LOCATION: 1952 SAMPLE NUMBER: 111658 DEPTH: 4.0-6.0 ft.
LENGTH: 5.5655 in. DIAMETER: 2.7772 in. WEIGHT: 1251.5 g
STRAIN AT FAILURE: 5.0% STRESS AT FAILURE: 9.7 pounds per square inch

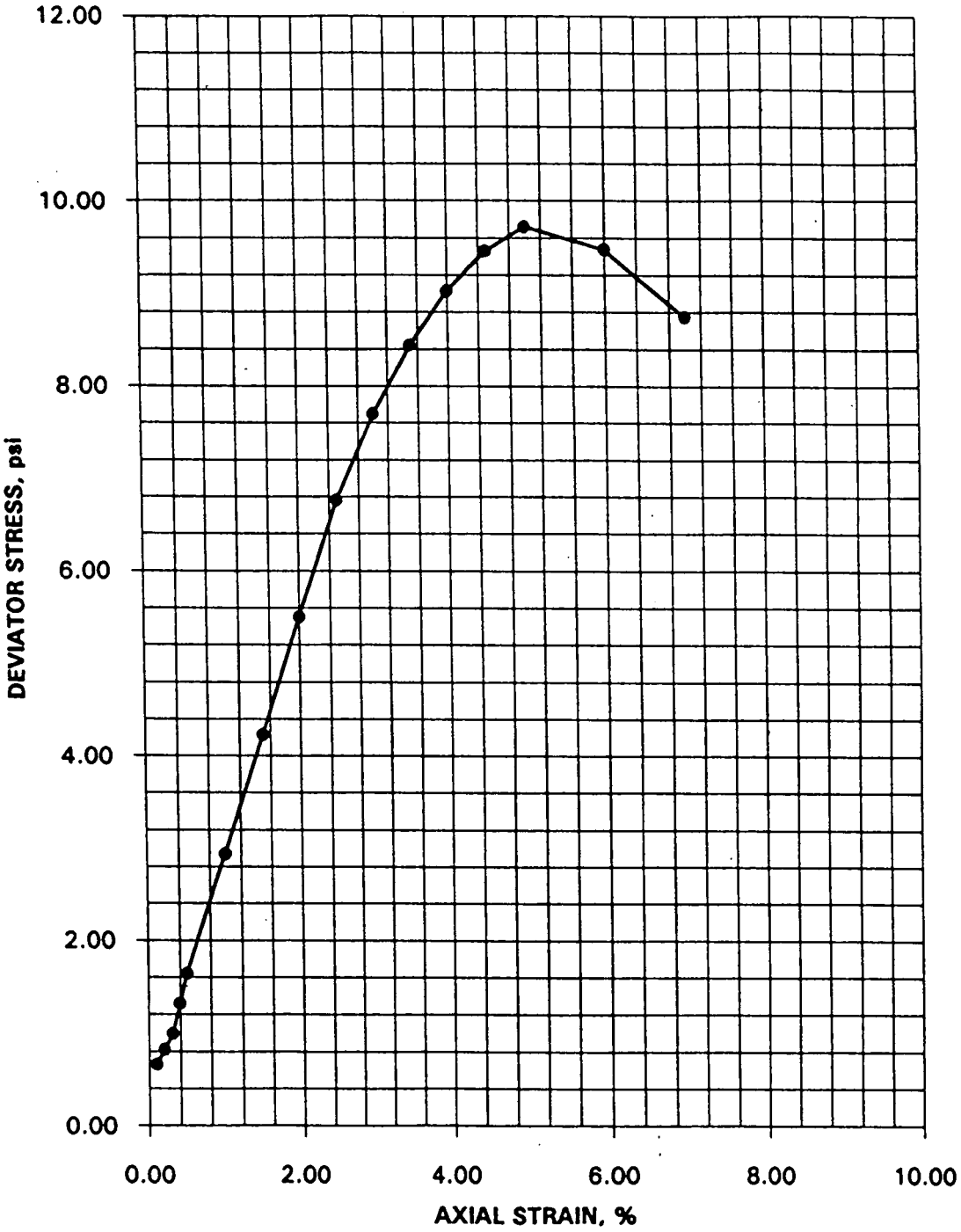

6508

TABLE C-21

TABLE C-21A

SOLID WASTE LANDFILL
CIS GEOPHYSICAL ANALYSIS
TOTAL MAGNETIC INTENSITY READINGS
OPERABLE UNIT 2 REMEDIAL INVESTIGATION
FERNALD ENVIRONMENTAL MANAGEMENT PROJECT

State Planer Coordinates		
North (ft)	East (ft)	Reading (Gammas)
482102.14	1379586.02	55745.0
482127.14	1379586.70	55791.0
482152.13	1379587.38	55810.0
482177.12	1379588.06	55687.0
482202.11	1379588.75	55621.0
482227.10	1379589.44	5550.0
482252.09	1379590.13	55734.0
482251.41	1379615.11	55795.0
482226.41	1379614.42	55067.0
482201.42	1379613.75	56365.0
482176.43	1379613.05	56965.0
482151.44	1379612.36	56113.0
482126.45	1379611.69	55797.0
482101.46	1379611.00	55950.0
482100.78	1379636.00	56549.0
482125.77	1379636.69	55707.0
482150.76	1379637.36	56203.0
482175.75	1379638.05	56447.0
482200.74	1379638.75	56482.0
482225.73	1379639.42	55538.0
482250.72	1379640.11	55592.0
482250.04	1379665.09	54286.0
482225.05	1379664.41	56577.0
482200.06	1379663.72	57049.0
482175.07	1379667.03	56313.0
482150.07	1379662.34	56059.0

TABLE C-21A
(Continued)

State Planer Coordinates		
North (ft)	East (ft)	Reading (Gammas)
482125.09	1379661.67	55805.0
482100.09	1379660.98	56839.0
482099.41	1379685.98	56692.0
482124.40	1379686.67	55846.0
482149.39	1379687.34	56075.0
482174.38	1379688.03	56158.0
482199.37	1379688.72	56388.0
482224.36	1379689.41	56438.0
482249.36	1379690.09	54700.0
482248.67	1379715.08	55406.0
482223.68	1379714.39	56165.0
482198.69	1379713.70	56385.0
482173.70	1379713.02	56085.0
482148.71	1379712.33	55971.0
482123.72	1379711.66	56011.0
482098.73	1379710.97	56680.0
482098.04	1379735.95	56150.0
482123.04	1379736.64	56262.0
482148.02	1379737.31	55848.0
482173.02	1379738.00	55970.0
482198.00	1379738.69	56362.0
482223.00	1379739.38	56071.0
482247.99	1379740.06	56229.0
482247.31	1379765.06	55928.0
482222.31	1379764.38	56812.0
482197.32	1379763.69	56434.0
482172.33	1379763.00	56034.0
482147.34	1379762.31	55871.0
482122.35	1379761.64	56040.0

TABLE C-21A
(Continued)

State Planer Coordinates		
North (ft)	East (ft)	Reading (Gammas)
482097.36	1379760.95	56699.0
482096.68	1379785.94	56511.0
482121.67	1379786.63	56278.0
482146.66	1379787.30	55951.0
482171.65	1379787.98	55982.0
482196.64	1379788.67	56079.0
482221.63	1379789.36	56477.0
482246.62	1379790.05	55891.0
482245.94	1379815.05	56098.0
482220.94	1379814.36	55967.0
482195.95	1379813.67	55927.0
482170.96	1379812.98	55933.0
482145.97	1379812.30	55924.0
482120.98	1379811.63	55918.0
482095.99	1379810.94	55902.0
482095.31	1379835.92	55676.0
482120.30	1379836.61	55804.0
482145.29	1379837.28	55824.0
482170.28	1379837.97	55780.0
482195.27	1379838.66	55589.0
482220.26	1379839.34	55678.0
482245.25	1379840.03	56018.0

TABLE C-21B

SOLID WASTE LANDFILL
CIS GEOPHYSICAL ANALYSIS
EM 31 READINGS
OPERABLE UNIT 2 REMEDIAL INVESTIGATION
FERNALD ENVIRONMENTAL MANAGEMENT PROJECT

State Plane Coordinates			
Northing (ft.)	Easting (ft.)	Horizontal Dipole (mmhos/m)	Vertical Dipole (mmhos/m)
482096.00	1379810.88	27.00	43.00
482219.57	1379864.33	46.00	31.00
482244.57	1379865.02	22.00	40.00
482245.94	1379815.05	23.00	31.00
482195.95	1379813.67	26.00	39.00
482145.97	1379812.30	25.00	40.00
482120.98	1379811.63	30.00	44.00
482097.36	1379760.95	70.00	-100.00
482092.36	1379760.81	84.00	-100.00
482105.36	1379761.17	82.00	-100.00
482117.35	1379761.50	54.00	58.00
482130.35	1379761.86	53.00	27.00
482147.34	1379762.31	32.00	46.00
482197.32	1379763.69	46.00	59.00
482207.32	1379763.97	66.00	-100.00
482206.32	1379763.94	66.00	-100.00
482214.32	1379764.16	62.00	-100.00
482217.31	1379764.23	62.00	-100.00
482222.31	1379764.38	62.00	32.00
482242.31	1379764.92	65.00	8.00
482247.31	1379765.06	50.00	55.00
482223.68	1379714.39	46.00	50.00
482198.69	1379713.70	47.00	40.00
482180.69	1379713.20	36.00	50.00
482176.70	1379713.09	38.00	50.00
482173.70	1379713.02	36.00	47.00
482161.70	1379712.69	38.00	48.00
482148.71	1379712.33	41.00	54.00
482123.72	1379711.66	45.00	62.00
482106.72	1379711.19	68.00	2.40
482098.73	1379710.97	54.00	48.00
482100.09	1379660.98	61.00	-100.00
482098.09	1379660.92	61.00	-100.00
482110.09	1379661.25	70.00	-100.00
482113.09	1379661.34	54.00	64.00
482150.07	1379662.34	20.00	35.00

TABLE C-21B
(Continued)

State Plane Coordinates			
Northing (ft.)	Easting (ft.)	Horizontal Dipole (mmhos/m)	Vertical Dipole (mmhos/m)
482175.07	1379663.03	38.00	45.00
482190.06	1379663.44	44.00	33.00
482193.06	1379663.53	42.00	48.00
482200.06	1379663.72	45.00	45.00
482210.05	1379664.00	42.00	55.00
482225.05	1379664.41	56.00	32.00
482201.42	1379613.73	100.00	-100.00
482207.42	1379613.91	66.00	-100.00
482176.43	1379613.05	64.00	-100.00
482151.44	1379612.36	29.00	43.00
482139.44	1379612.03	30.00	38.00
482121.45	1379611.55	34.00	51.00
482101.46	1379611.00	29.00	51.00
482111.46	1379611.27	34.00	44.00
482276.39	1379615.78	23.00	29.00
482301.39	1379616.47	25.00	33.00
482351.37	1379617.84	26.00	32.00
482376.36	1379618.52	28.00	36.00
482401.35	1379619.20	23.00	31.00
482451.33	1379620.58	22.00	31.00
482476.32	1379621.27	23.00	34.00
482474.95	1379671.25	23.00	37.00
482449.96	1379670.56	22.00	33.00
482399.98	1379669.19	25.00	34.00
482374.99	1379668.50	20.00	27.00
482350.00	1379667.83	20.00	28.00
482325.01	1379667.14	25.00	30.00
482300.02	1379666.45	25.00	33.00
482298.65	1379716.44	26.00	37.00
482348.63	1379717.81	31.00	36.00
482398.61	1379719.17	23.00	32.00
482380.62	1379718.69	24.00	30.00
482448.59	1379720.55	28.00	34.00
482473.59	1379721.23	29.00	42.00
482472.22	1379771.22	28.00	37.00
482447.23	1379770.53	21.00	34.00
482397.25	1379769.16	27.00	34.00
482347.27	1379767.80	26.00	34.00
482297.29	1379766.42	20.00	26.00
482295.92	1379816.41	20.00	21.00
482345.90	1379817.78	24.00	32.00
482395.88	1379819.14	24.00	32.00

TABLE C-21B
(Continued)

State Plane Coordinates			
Northing (ft.)	Easting (ft.)	Horizontal Dipole (mmhos/m)	Vertical Dipole (mmhos/m)
482420.87	1379819.83	24.00	31.00
482445.86	1379820.52	22.00	28.00
482470.85	1379821.20	22.00	35.00
482469.48	1379871.17	20.00	35.00
482444.49	1379870.48	21.00	28.00
482394.51	1379869.11	22.00	31.00
482344.53	1379867.75	20.00	28.00
482294.55	1379866.38	20.00	28.00

FIGURE C-21A

SOLID WASTE LANDFILL
CIS GEOPHYSICAL ANALYSIS
TOTAL MAGNETIC INTENSITY CONTOURS
OPERABLE UNIT 2 REMEDIAL INVESTIGATION
FERNALD ENVIRONMENTAL MANAGEMENT PROJECT

(Contour interval 500 Gammas)

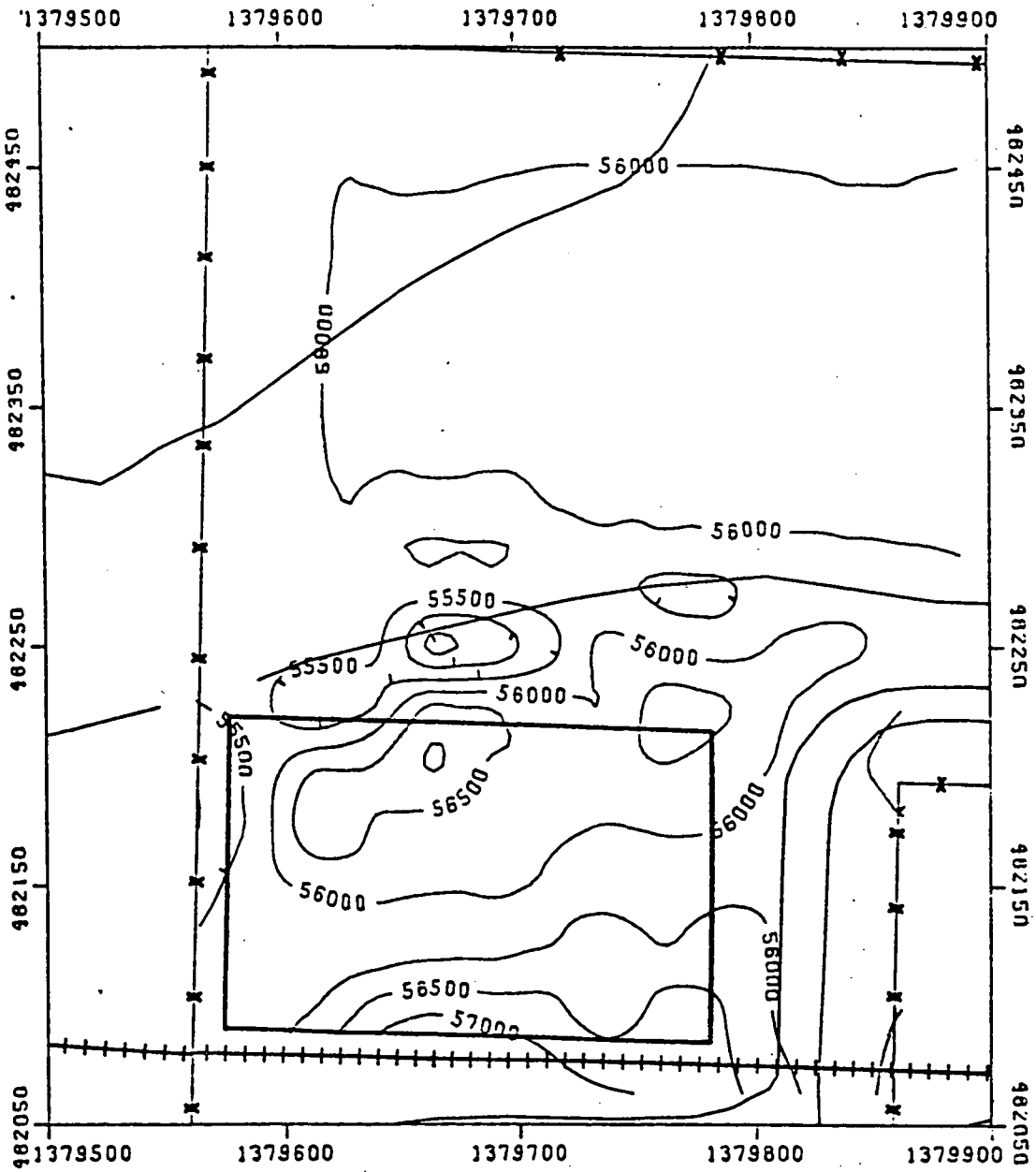

FIGURE C-21B

**SOLID WASTE LANDFILL
CIS GEOPHYSICAL ANALYSIS
EM 31 HORIZONTAL DIPOLE APPARENT CONDUCTIVITY MAP
OPERABLE UNIT 2 REMEDIAL INVESTIGATION
FERNALD ENVIRONMENTAL MANAGEMENT PROJECT**

(Contour interval 20.0 mmhos/m)

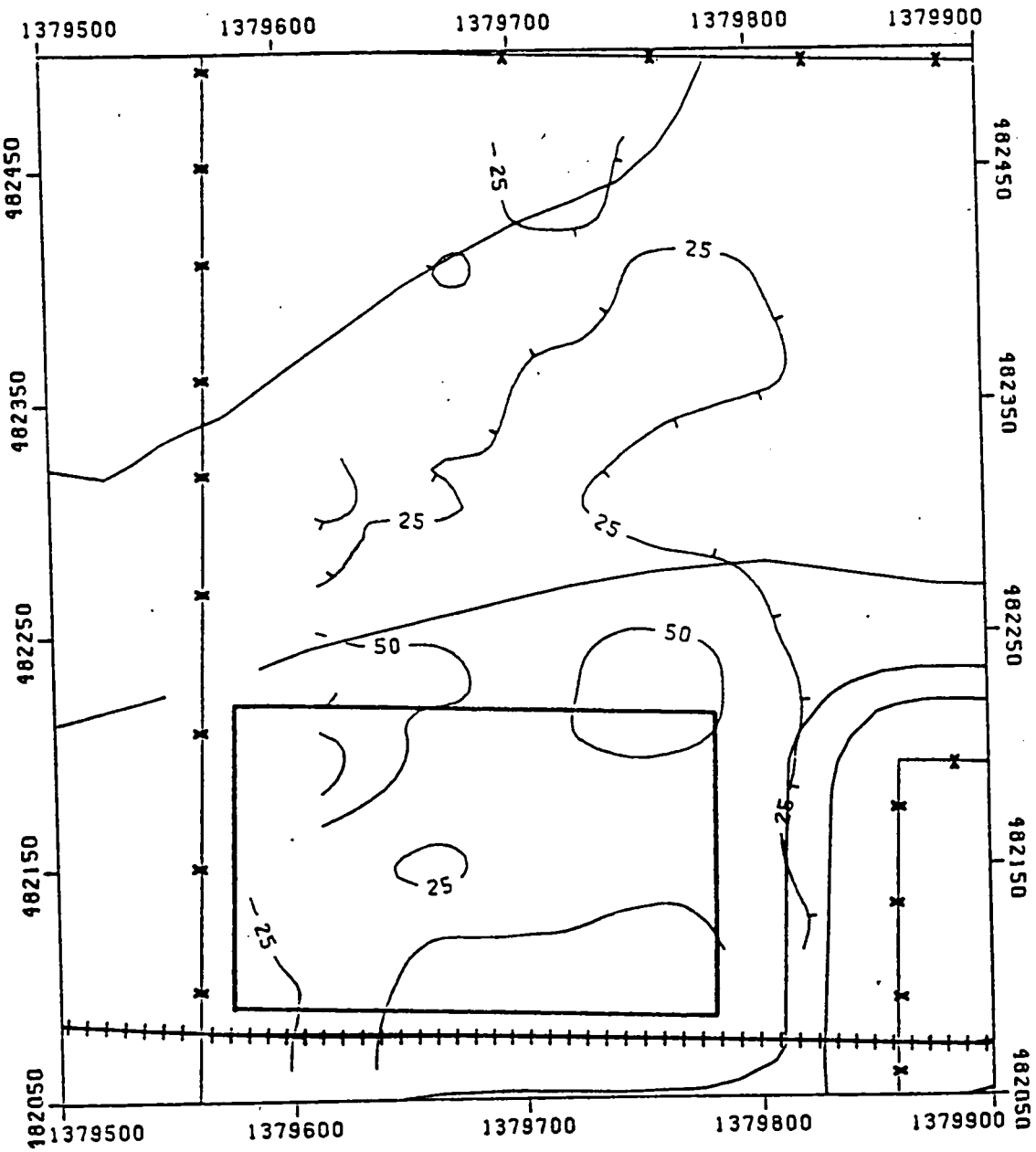

FIGURE C-21C

SOLID WASTE LANDFILL
CIS GEOPHYSICAL ANALYSIS
EM 31 VERTICAL DIPOLE APPARENT CONDUCTIVITY MAP
OPERABLE UNIT 2 REMEDIAL INVESTIGATION
FERNALD ENVIRONMENTAL MANAGEMENT PROJECT

(Contour interval 20.0 mmhos/m)

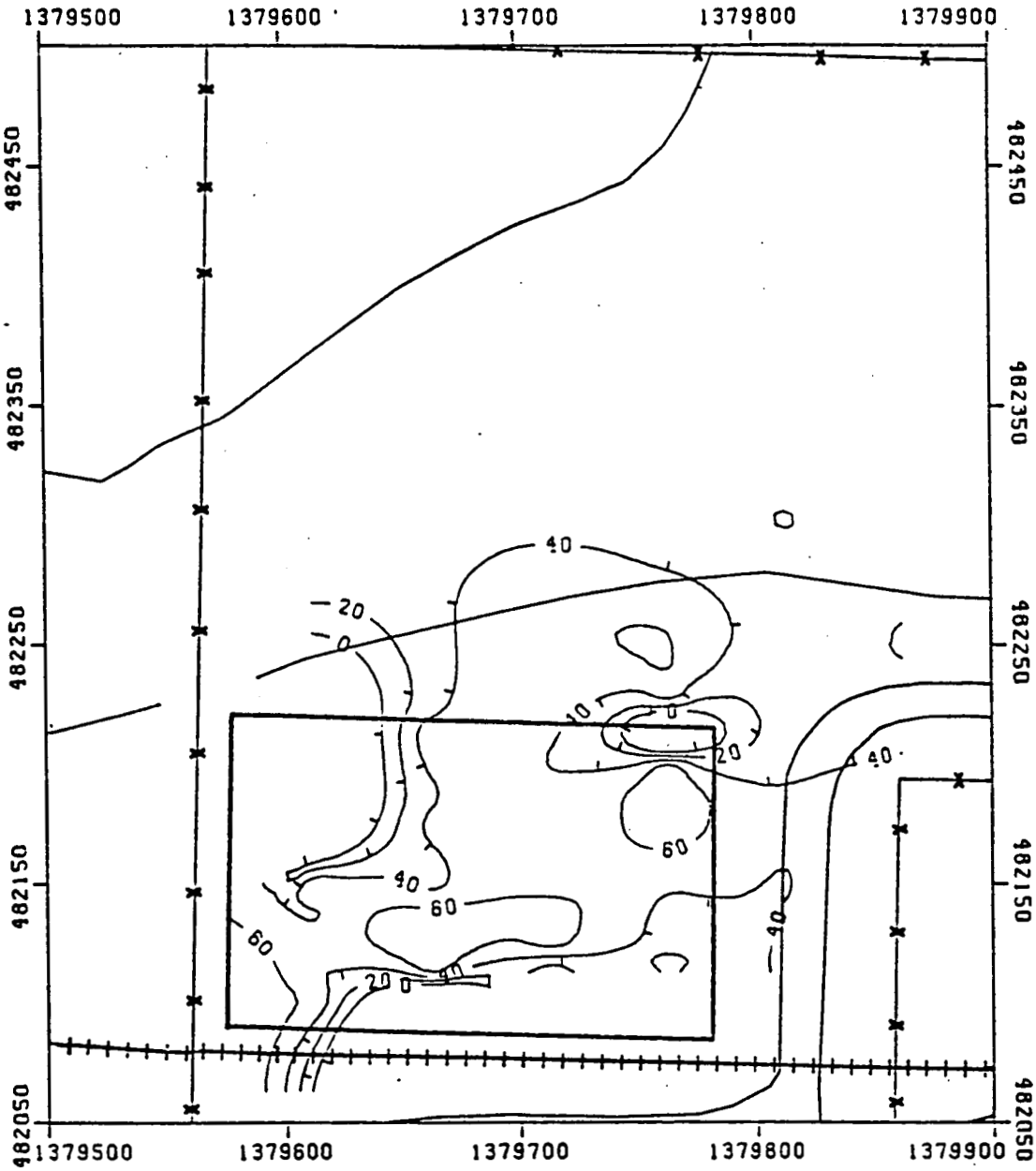

FIGURE C-21D

SOLID WASTE LANDFILL
CIS GEOPHYSICAL ANALYSIS
GROUND PENETRATING RADAR RESULTS
OPERABLE UNIT 2 REMEDIAL INVESTIGATION
FERNALD ENVIRONMENTAL MANAGEMENT PROJECT

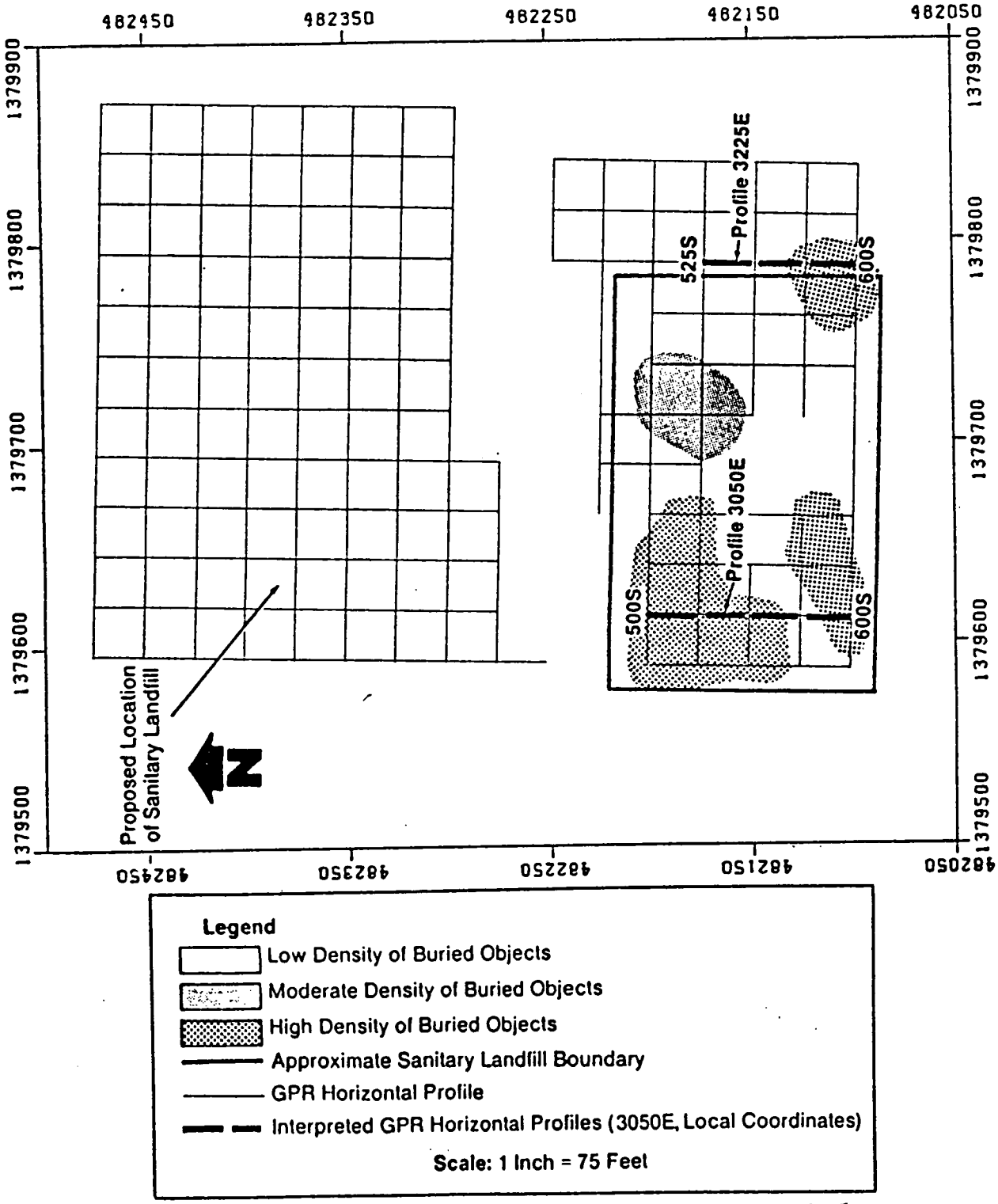

TABLE C-22

PROJECT NUMBER: 602 3.2	PROJECT NAME: CRU2 RI PHASE I FIELD INVESTIGATION	
BORING NUMBER: 1035	COORDINATES: NORTH 482200.60 EAST 1379710.46	DATE:20-MAR-88
GROUND ELEVATION: 584.3	GWL: Depth Date/Time	DATE STARTED: 20-MAR-88
ENGINEER/GEOLOGIST: M. SLUSARSKI	Depth Date/Time	DATE COMPLETE: 21-MAR-88
DRILLING METHOD: CABLE-TOOL DRILLING		

DEPTH	SAMPLE	DATE TIME	BLOWS ON SAMPLE	RECOVERY INCHES		USCS SYMBOL	TSF	REMARKS
1.5	008374	03/20/88 09:33	1 3 4	8	MEDIUM STIFF, YELLOW-BROWN (10YR, 4/2) CLAY, SOME SILT, ROOTLETS, DRY.	CL	1.0	PID=0 ppm BГ=80 cpm
1.5 3.0	008375	03/20/88 09:35	2 3 4	10	MEDIUM STIFF, YELLOW-BROWN (10YR, 4/4) CLAY, SOME SILT, DRY.	CL	1.0	PID=0 ppm BГ=80 cpm
3.0 4.5	008376	03/20/88 09:38	4 6 8	14	STIFF, GREY (10YR, 6/1) CLAY, SOME SILT, DRY.	CL	1.5	PID=0 ppm BГ=80 cpm
4.5 6.0	008377	03/20/88 09:41	7 8 9	12	STIFF, GREY (10YR, 6/1) CLAY, TRACE MEDIUM GRAVEL, DRY. SOFT, GREY (10YR, 6/1) CLAY, SOME SILT, DAMP.	CL CL	2.0 .5	PID=0 ppm BГ=80 cpm
6.0 7.5	008378	03/20/88 09:45	7 8 9	2	SOFT, GREY (10YR, 6/1) CLAY, SOME SILT, DAMP. SOFT, GREY-BROWN (10YR, 5/4) CLAY, SOME SILT, DAMP. STIFF, YELLOW-BROWN (10YR, 5/3) CLAY, SOME SILT, SOME FINE GRAVEL, DRY.	CL CL CL	2.0 .5 2.0	PID=0 ppm BГ=80 cpm
7.5 9.0	008379	03/20/88 10:31	6 8 12	18	STIFF, YELLOW-BROWN (10YR, 5/3) CLAY, SOME SILT, SOME FINE GRAVEL, DRY.	CL	2.0	PID=0 ppm BГ=80 cpm
12.0 13.5	008382	03/20/88 15:40	12 10 13	12	STIFF, YELLOW-BROWN (10YR, 5/4) CLAY, SOME SILT AND FINE GRAVEL, DRY.	CL	1.5	PID=0 ppm BГ=80 cpm
13.5 15.0	008383	03/20/88 15:50	3 5 6	14	SOFT GREY (5Y, 5/1) CLAY, SOME SILT AND FINE GRAVEL, DAMP.	CL	.5	PID=0 ppm BГ=80 cpm
15.0 16.5	008384	03/20/88 16:00	2 5 5	14	SOFT, GREY (5Y, 5/1) CLAY, SOME SILT AND FINE GRAVEL, DAMP.	CL	.5	PID=0 ppm BГ=80 cpm
16.5 18.0	008385	03/20/88 16:08	2 3 4	14	SOFT, GREY (5Y, 5/1) CLAY, SOME SILT AND FINE GRAVEL, DAMP.	CL	.5	PID=0 ppm BГ=80 cpm
18.0 19.5	008386	03/20/88 16:17	3 4 6	14	MEDIUM STIFF, GREY (5Y, 5/1) CLAY, SOME SILT AND FINE GRAVEL, DAMP.	CL	1.0	PID=0 ppm BГ=80 cpm
19.5 21.0	008387	03/21/88 09:07	5 5 7	8	SOFT GREY (5Y, 5/1) CLAY, SOME MEDIUM-FINE GRAVEL, DAMP.	CL	.5	PID=0 ppm BГ=80 cpm
22.5 24.0	008389	03/21/88 09:55	14 50 34	10	STIFF, GREY-GREEN (5Y, 5/2) SILTY CLAY, DRY.	CL	1.5	PID=0 ppm BГ=80 cpm

NOTES:

SAA = Same as Above
PID = Photoionization Detector
N/A = Not Applicable

000536

PROJECT NUMBER: 602 3.2	PROJECT NAME: CRU2 RI PHASE I FIELD INVESTIGATION	
BORING NUMBER: 1035	COORDINATES: NORTH 482200.60 EAST 1379710.46	DATE:20-MAR-88
GROUND ELEVATION: 584.3	GWL: Depth Date/Time	DATE STARTED: 20-MAR-88
ENGINEER/GEOLOGIST: M. SLUSARSKI	Depth Date/Time	DATE COMPLETE: 21-MAR-88
DRILLING METHOD: CABLE-TOOL DRILLING		

DEPTH	SAMPLE	DATE TIME	BLOWS ON SAMPLE	RECOVERY INCHES		USCS SYMBOL	TSF	REMARKS
24.0 25.5	008390 03/21/88 10:51		9 14 23	16	MEDIUM DENSE, GREY (5Y, 5/1) WELL GRADED GRAVEL-SAND MIXTURE, WET. HARD, GREY (5Y, 5/1) CLAY, SOME SILT, DRY.	GW CL	N/A >4.	PID=0 ppm BΓ=80 cpm
25.5 27.0	008391 03/21/88 11:17		11 18 20	14	MEDIUM DENSE, GREY (5Y, 5/1) WELL GRADED GRAVEL-SAND MIXTURE, WET. STIFF, GREY (5Y, 4/1) CLAY, SOME SILT, DRY.	GW CL	N/A 3.5	PID=0 ppm BΓ=80 cpm

NOTES:

SAA = Same as Above
PID = Photoionization Detector
N/A = Not Applicable

PROJECT NUMBER: 602 3.2	PROJECT NAME: CRU2 RI PHASE I FIELD INVESTIGATION	
BORING NUMBER: 1038	COORDINATES: NORTH 482055.43 EAST 1379622.49	DATE:11-JAN-88
GROUND ELEVATION: 581.9	GWL: Depth Date/Time	DATE STARTED: 11-JAN-88
ENGINEER/GEOLOGIST: W. KEGLEY	Depth Date/Time	DATE COMPLETE: 13-JAN-88
DRILLING METHOD: CABLE-TOOL DRILLING		

DEPTH	SAMPLE	DATE TIME	BLOWS ON	SAMPLE	RECOVERY	INCHES		USCS	SYMBOL	TSF	REMARKS
1.5 3.0	007897 01/11/88 11:30		10 13 14		15		VERY STIFF DARK YELLOWISH BROWN (10YR, 4/4) SILT AND GRAVEL WITH CLAY - DRY. STIFF VERY DARK GREY (5Y, 3/1) CLAY - DRY.	ML CL		3.0 1.5	PID=0 ppm α=0 ppm βΓ=60-80 cpm
3.0 4.5	007898 01/11/88 13:05		15 20 26		14		STIFF VERY DARK GREY (5Y, 3/1) CLAY WITH SILT, TRACE SAND - DRY.	CL		2.0	PID=0 ppm α=0 ppm βΓ=100-120 cpm
4.5 6.0	007899 01/11/88 13:10		10 12 12		18		STIFF VERY DARK GREY (5Y, 3/1) CLAY WITH SILT, TRACE SAND - DRY. STIFF YELLOWISH BROWN (10YR, 5/6) MOTTLED CLAY, TRACE GRAVEL AND SILT - DRY.	CL CL		2.0 1.5	PID=0 ppm α=0 ppm βΓ=80-100 cpm
6.0 7.5	007900 01/11/88 13:15		9 10 12		16		STIFF YELLOWISH BROWN (10YR, 5/6) MOTTLED CLAY, TRACE GRAVEL AND SILT - DRY.	CL		2.0	PID=0 ppm α=0 ppm βΓ=80-100 cpm
7.5 9.0	007901 01/12/88 08:00		10 13 21		18		VERY STIFF YELLOWISH BROWN (10YR, 5/4) MOTTLED CLAY, TRACE GRAVEL AND SILT - DRY.	CL		3.0	PID=0 ppm α=0 ppm βΓ=80-100 cpm
9.0 10.5	007902 01/12/88 08:15		17 16 21		7		STIFF YELLOWISH BROWN (2.5Y, 6/4) MOTTLED SILT AND CLAY WITH GRAVEL, SOME SAND - DRY.	ML		2.0	PID=0 ppm α=0 ppm βΓ=80-100 cpm
10.5 12.0	007903 01/12/88 08:50		12 20 26		17		HARD LIGHT YELLOWISH BROWN (2.5YR, 6/4) MOTTLED CLAY AND SILT WITH GRAVEL, SOME SAND - DRY.	CL		4.5	PID=0 ppm α=0 ppm βΓ=80-100 cpm
12.0 13.5	007904 01/12/88 09:10		14 24 26		18		HARD STRONG BROWN (7.5YR, 5/6) CLAY AND SILT WITH GRAVEL, SOME SAND - DRY. VERY STIFF GREY (5Y, 5/1) CLAY AND SILT, TRACE GRAVEL - DRY.	CL CL		4.5 3.0	PID=0 ppm α=0 ppm βΓ=80-100 cpm
13.5 15.0	007905 01/12/88 09:30		10 20 24		16		VERY STIFF GREY (5Y, 5/1) CLAY AND SILT, TRACE GRAVEL - DRY. TIGHT VERTICAL FRACTURE WITH Fe2O3 (IRON OXIDE??) STAINS.	CL		3.0	PID=0 ppm α=0 ppm βΓ=80-100 cpm
15.0 16.5	007907 01/12/88 10:45		4 8 14		8		STIFF DARK GREY (5Y, 4/1) CLAY, SOME GRAVEL, TRACE SAND.	CL		1.5	PID=0 ppm α=0 ppm βΓ=100 cpm
16.5 18.0	007908 01/12/88 13:25		13 8 16		10		VERY STIFF GREY (5Y, 5/1) CLAY, SOME GRAVEL AND SAND - DRY. VERY DENSE GREY (5Y, 5/1) SAND AND SILT, TRACE GRAVEL - TOP DRY, BOTTOM MOIST.	CL SM		3.0 4.5	PID=0 ppm α=0 ppm βΓ=100 cpm
24.0 25.5	007948 01/12/88 15:36		18 28 29		10		VERY STIFF GREY (5Y, 5/1) CLAY AND SILT, SOME SAND AND GRAVEL - DRY.	CL		3.5	PID=0 ppm α=0 ppm βΓ=100 cpm
25.5 27.0	007949 01/12/88 16:21		10 19 26		13		STIFF OLIVE (5Y, 5/3) CLAY, SOME GRAVEL AND SILT, TRACE WOOD FRAGMENTS - DRY.	CL		2.0	PID=0 ppm α=0 ppm βΓ=100 cpm

NOTES:

SAA = Same as Above
PID = Photoionization Detector
N/A = Not Applicable

PROJECT NUMBER: 602 3.2	PROJECT NAME: CRU2 RI PHASE I FIELD INVESTIGATION	
BORING NUMBER: 1038	COORDINATES: NORTH 482055.43 EAST 1379622.49	DATE:11-JAN-88
GROUND ELEVATION: 581.9	GWL: Depth Date/Time	DATE STARTED: 11-JAN-88
ENGINEER/GEOLOGIST: W. KEGLEY	Depth Date/Time	DATE COMPLETE: 13-JAN-88
DRILLING METHOD: CABLE-TOOL DRILLING		

DEPTH	SAMPLE	DATE	TIME	BLOWS ON	SAMPLE	RECOVERY	INCHES		USCS	SYMBOL	TSF	REMARKS
27.0 28.5	007951	01/13/88	08:59	18 22 24		14		HARD, OLIVE GREY (5Y, 5/2) CLAY, SOME SILT, TRACE GRAVEL.	CL		4.5	PID=0 ppm α=0 ppm BΓ=100 cpm

NOTES:

SAA = Same as Above
PID = Photoionization Detector
N/A = Not Applicable

PROJECT NUMBER: 20.03.05	PROJECT NAME: CRU2 RI PHASE II FIELD INVESTIGATION	
BORING NUMBER: 11036	COORDINATES: NORTH 482111.18 EAST 1379701.23	DATE:17-MAY-93
GROUND ELEVATION: 588.5	GWL: Depth Date/Time	DATE STARTED: 17-MAY-93
ENGINEER/GEOLOGIST: A COMO	Depth Date/Time	DATE COMPLETE: 17-MAY-93
DRILLING METHOD: HOLLOW STEM AUGER W/CME SAMPLER		

DEPTH	SAMPLE	DATE TIME	BLOWS ON	SAMPLE	RECOVERY INCHES		USCS SYMBOL	TSF	REMARKS
2.5		05/17/93 10:05	N/A		30	HARD, (2.5Y, 5/4) LIGHT OLIVE BROWN, SILTY CLAY, NO PLASTICITY, GRAVEL, DRY	CL	4.0	PID=0.5 ppm BΓ=50-100 cpm
2.5 3.5	115381	05/17/93 10:05	N/A		1	SAA, DRY	CL	4	PID=0.5 ppm BΓ=50 - 100 cpm
3.5 5.0	115381	05/17/93 10:05	N/A		18	HARD, (5Y, 4/1) DARK GRAY, SILTY CLAY, SLIGHT PLASTICITY, SOME (5Y, 2.5/1) BLACK SILTY CLAY, GRAVEL, DRY, GLASS, PIECES OF SLAG	CL	3.25	PID=.5 ppm BΓ=3500-4000 cpm
5.0 7.5		05/17/93 10:20	N/A		24	SAA, DRY	CL	2.5	PID=0.5 ppm BΓ=500 cpm
7.5 10.0		05/17/93 00:00	N/A		N/A	NO RECOVERY	N/A	N/A	
10.0 12.5		05/17/93 00:00	N/A		N/A	NO RECOVERY	N/A	N/A	
12.5 15.0		05/17/93 00:00	N/A		N/A	NO RECOVERY	N/A	N/A	
15.0 17.0		05/17/93 00:00	N/A		N/A	AUGERED FROM 15' TO 17' TO BREAK UP OBSTRUCTION	N/A	N/A	
17.0 19.0	115380	05/17/93 13:45	N/A		24	VERY HARD, (2.5Y, 5/4) LIGHT OLIVE BROWN, CLAYEY SILT, SOME (5Y, 5.1) CLAY, NO PLASTICITY, FEW PIECES OF GRAVEL, DRY, PIECE OF WOOD AT TOP OF SPOON, IRON STAINING ON CLEAVAGE PLANES	ML	4.5	PID=0.5 ppm BΓ=50-100 cpm
19.0 21.0		05/17/93 00:00	N/A		N/A	@ 14:00 PUSHED SHELBY FROM 19.0' TO 21.0' SAMPLE NO.115382	N/A	N/A	
21.0		05/17/93 00:00	N/A		N/A	BOTTOM OF BORING = 21 FEET	N/A	N/A	

NOTES:
USED CME SAMPLER TO 19' THEN PUSHED SHELBY TUBE FROM 19' TO 21'.
BACKGROUND READINGS:
MT = .5 PPM, BETA/GAMMA = 50-100 CPM

Boring Contractor: PENNSYLVANIA DRILLING CO.
Driller: DON SMITH, SAM SMITH

SAA = Same as Above
PID = Photoionization Detector
N/A = Not Applicable

PROJECT NUMBER: 20.03.05	PROJECT NAME: CRU2 RI PHASE II FIELD INVESTIGATION	
BORING NUMBER: 11037	COORDINATES: NORTH 482133.33 EAST 1379722.92	DATE:15-MAY-93
GROUND ELEVATION: 589.2	GWL: Depth Date/Time	DATE STARTED: 15-MAY-93
ENGINEER/GEOLOGIST: A COMO	Depth Date/Time	DATE COMPLETE: 15-MAY-93
DRILLING METHOD: HOLLOW STEM AUGER W/CME SAMPLER		

DEPTH	SAMPLE	DATE TIME	BLOWS ON SAMPLE	RECOVERY INCHES		USCS SYMBOL	TSF	REMARKS
2.5		05/15/93 09:55	N/A	30	VERY HARD, (2.5Y, 5/4) LIGHT OLIVE BROWN, SILTY CLAY, LOW PLASTICITY, SOME GRAVEL, DRY, ORGANIC MATERIAL, ROOTS	CL	4.25	PID=1.5 ppm BΓ=40-80 cpm
2.5 4.0		05/15/93 09:55	N/A	18	SAA, DRY	CL	4.25	PID=1.5 ppm BΓ=40-80 cpm
4.0 5.0		05/15/93 09:55	N/A	12	VERY HARD, (5Y, 4/1) DARK GRAY, SILTY CLAY, SLIGHT PLASTICITY, SOME GRAVEL, DRY, SOME WASTE MATERIAL; PLASTIC CUP LIDS, METAL CAPS	CL	4.5	
5.0 6.0	115371	05/15/93 10:10	N/A	12	HARD, (5Y, 5/1) GRAY TO (5Y, 4/1) DARK GRAY SILTY CLAY, MEDIUM PLASTICITY, SOME GRAVEL, MOIST	CL	2.0	PID=1.5 ppm BΓ=40-80 cpm
6.0 7.5	115371	05/15/93 10:10	N/A	18	VERY HARD, (5Y, 4/1) DARK GRAY TO (5Y, 3/1) VERY DARK GRAY, SILTY CLAY, LOW PLASTICITY, SOME SMALL GRAVEL, DRY	CL	4.5	PID=1.5 ppm BΓ=40-80 cpm
7.5 10.0		05/15/93 10:10	N/A	0	NO RECOVERY	N/A	N/A	
10.0 12.5		05/15/93 10:20	N/A	30	VERY HARD, (5Y, 5/1) GRAY TO (5Y, 3/1) VERY DARK GRAY, SILT CLAY, MEDIUM PLASTICITY, DRY *SEE NOTES	CL	4.5	PID=1.5 ppm BΓ=40-80 cpm
12.5 13.0		05/15/93 10:20	N/A	6	SAA, DRY	CL	4.5	PID=1.5 ppm BΓ=40-80 cpm
13.0 15.0		05/15/93 10:20	N/A	24	HARD, (2.5Y, 5/6) LIGHT OLIVE BROWN, CLAYEY SILT, WITH SOME (5Y, 5/1) TO (5Y, 3/1) SILTY CLAY, MEDIUM PLASTICITY, DRY	ML	2.75	
15.0 17.5		05/15/93 11:00	N/A	30	SAA, WET	ML	2.75	PID=1.5 ppm BΓ=40-80 cpm
17.5 20.0		05/15/93 00:00	N/A	30	VERY HARD, (2.5Y, 5/4) LIGHT OLIVE BROWN, SILTY CLAY, SOME (5Y, 5/1) GRAY CLAY ALONG CLEAVAGE PLANES, NO PLASTICITY, DRY, SOME SAND, WELL SORTED (SAND WAS WET), IRON STAINING ON CLEAVAGE PLANES	CL	4.5	PID=1.5 ppm BΓ=40-80 cpm
20.0 22.0	115370 115374	05/15/93 13:50	N/A	30	@ 13:50 PUSH SHELBY TUBE FROM 20 TO 22. COLLECTED WATER SAMPLE 115374.	N/A	N/A	

NOTES:
SHELBY TUBE WAS PUSHED AFTER SAMPLING/DRILLING USING CME SAMPLER. SHELBY TUBE WAS PUSHED FROM 20.0' TO 22.0'. * ONLY HALF OF SAMPLER FILLED THROUGHOUT 2.5' LENGTH OF RECOVERED SAMPLE. LOOKS LIKE THE SAMPLE WAS CUT IN HALF.
BACKGROUND: MT = 1.5 ppm; BETA GAMMA 40-80 CPM

Boring Contractor: PENNSYLVANIA DRILLING CO
Driller: DON SMITH, ROBERT YOST

SAA = Same as Above
PID = Photoionization Detector
N/A = Not Applicable

PROJECT NUMBER: 20.03.05	PROJECT NAME: CRU2 RI PHASE II FIELD INVESTIGATION	
BORING NUMBER: 11037	COORDINATES: NORTH 482133.33 EAST 1379722.92	DATE:15-MAY-93
GROUND ELEVATION: 589.2	GWL: Depth Date/Time	DATE STARTED: 15-MAY-93
ENGINEER/GEOLOGIST: A COMO	Depth Date/Time	DATE COMPLETE: 15-MAY-93
DRILLING METHOD: HOLLOW STEM AUGER W/CME SAMPLER		

DEPTH	SAMPLE	DATE	TIME	BLOWS ON	SAMPLE	RECOVERY	INCHES		USCS	SYMBOL	TSF	REMARKS
22.0	05/15/93 00:00			N/A		N/A		BOTTOM OF BORING = 22 FEET	N/A		N/A	

NOTES:
SHELBY TUBE WAS PUSHED AFTER SAMPLING/DRILLING USING CME SAMPLER. SHELBY TUBE WAS PUSHED FROM 20.0' TO 22.0'. * ONLY HALF OF SAMPLER FILLED THROUGHOUT 2.5' LENGTH OF RECOVERED SAMPLE. LOOKS LIKE THE SAMPLE WAS CUT IN HALF.
BACKGROUND: MT = 1.5 ppm; BETA GAMMA 40-80 CPM

Boring Contractor: PENNSYLVANIA DRILLING CO
Driller: DON SMITH, ROBERT YOST

SAA = Same as Above
PID = Photoionization Detector
N/A = Not Applicable

PROJECT NUMBER: 20.03.05	PROJECT NAME: CRU2 RI PHASE II FIELD INVESTIGATION	
BORING NUMBER: 11038	COORDINATES: NORTH 482115.28 EAST 1379746.55	DATE:16-MAY-93
GROUND ELEVATION: 588.2	GWL: Depth Date/Time	DATE STARTED: 16-MAY-93
ENGINEER/GEOLOGIST: A COMO	Depth Date/Time	DATE COMPLETE: 16-MAY-93
DRILLING METHOD: HOLLOW STEM AUGER W/CME SAMPLER		

DEPTH	SAMPLE	DATE TIME	BLOWS ON	SAMPLE	RECOVERY	INCHES		USCS SYMBOL	TSF	REMARKS
2.0	115375 115376	05/16/93 10:00	N/A		24		HARD, (2.5Y, 5/4) SILTY CLAY, LOW PLASTICITY, SOME GRAVEL, MOIST, SOME SAND, WELL GRADED, PIECES OF GLASS, PLASTIC, METAL, CLAY PIPE, TAR LIKE MATERIAL	CL	3.0	PID=1.4 ppm BΓ=40-80 cpm
2.0 2.5	115375 115376	05/16/93 10:00	N/A		6		(2.5Y, 7/8) YELLOW AND (5Y, 8/1) WHITE, SILT LIKE MATERIAL, SOME GRAVEL, MOIST	N/A	N/A	PID=1.4 ppm BΓ=28000 cpm
2.5 5.0		05/16/93 10:00	N/A		0		NO RECOVERY	N/A	N/A	
5.0 7.5		05/16/93 10:15	N/A		30		HARD, (5Y, 4/1) DARK GRAY, SILTY CLAY, LOW PLASTICITY, SOME GRAVEL, DRY	CL	3.0	PID=1.4 ppm BΓ=40-80 cpm
7.5 8.0		05/16/93 10:15	N/A		6		SAA	N/A	N/A	PID=1.4 ppm BΓ=40-80 cpm
8.0 9.0		05/16/93 10:15	N/A		12		HARD, (5Y, 5/1) BLACK, SILTY CLAY, MEDIUM PLASATICITY, SOME ORGANIC MATERIAL, DRY	CL	2.75	PID=1.4 ppm BΓ=40-80 cpm
9.0 10.0		05/16/93 10:15	N/A		12		HARD, (5Y, 5/1) GRAY, SILTY CLAY, SOME SMALL GRAVEL, DRY, PIECE OF CONCRETE IN TIP OF SAMPLE	CL	2.75	PID=1.4 ppm BΓ=40-80 cpm
10.0 11.0		05/16/93 10:35	N/A		12		HARD, (5Y, 5/1) GRAY TO (5Y, 4/1) DARK GRAY, SILTY CLAY, SOME (2.5Y, 5/6) LIGHT OLIVE BROWN SILT, LOW PLASTICITY, DRY	CL	3.0	PID=1.4 ppm BΓ=40-80 cpm
11.0 12.5		05/16/93 10:35	N/A		18		HARD, (2.5Y, 5/6) LIGHT OLIVE BROWN, CLAYEY SILT, NO PLASTICITY, (5Y, 5/1) GRAY, SILTY CLAY, ALONG CLEAVAGE PLANES	ML	3.0	PID=1.4 ppm BΓ=40-80 cpm
12.5 15.0	115377	05/16/93 10:35	N/A		30		SAA, SOME THIN MOIST SILTY ZONES	ML	3.0	PID=1.4 ppm BΓ=40-80 cpm
17.0		05/16/93 00:00	N/A		N/A		BOTTOM OF BORING AT 17 FEET	N/A	N/A	

NOTES:

10:45 pushed shelby tube from 15 to 17 feet / sample 115378
BACKGROUND READINGS: MT = 1.4 PPM, BETA/GAMMA = 40-80 CPM

Boring Contractor: PENNSYLVANIA DRILLING CO
Driller: DON SMITH, ROBERT YOST

SAA = Same as Above
PID = Photoionization Detector
N/A = Not Applicable

02/02/94 13:57

PROJECT NUMBER: 20.03.05	PROJECT NAME: CRU2 RI PHASE II FIELD INVESTIGATION	
BORING NUMBER: 11039	COORDINATES: NORTH 482146.04 EAST 1379772.85	DATE:19-MAY-93
GROUND ELEVATION: 589.1	GWL: Depth Date/Time	DATE STARTED: 19-MAY-93
ENGINEER/GEOLOGIST: A COMO	Depth Date/Time	DATE COMPLETE: 19-MAY-93
DRILLING METHOD: HOLLOW STEM AUGER W/CME SAMPLER		

DEPTH	SAMPLE	DATE TIME	BLOWS ON	SAMPLE	RECOVERY	INCHES		USCS	SYMBOL	TSF	REMARKS
1.0		05/19/93 09:10	N/A		12		VERY HARD, (2.5Y, 4/4) OLIVE BROWN, SILTY CLAY, SLIGHT PLASTICITY, SOME GRAVEL, DRY	CL		4.5	PID=1.0 ppm BΓ=0-50 cpm
1.0 2.5		05/19/93 09:10	N/A		18		BLACK ROOFLING SHINGLES WITH SOME (2.5Y, 5/4) LIGHT OLIVE BROWN, SILTY CLAY, BETWEEN THEM, TAR	N/A		N/A	PID=2.5 ppm BΓ=200-250 cpm
2.5 5.0	115384	05/19/93 09:10	N/A		30		SAA, DRY	N/A		N/A	PID=2.5 ppm BΓ=200-250 cpm
5.0 7.5		05/19/93 09:30	N/A		N/A		NO RECOVERY	N/A		N/A	
7.5 10.0		05/19/93 09:30	N/A		N/A		NO RECOVERY	N/A		N/A	
10.0 12.0		05/19/93 10:35	8 12 18 18		12		HARD, (2.5Y 5/6) LIGHT OLIVE BROWN, CLAYEY SILT, LOW PLASTICITY, SOME (5Y, 5/1) GRAY CLAY ALONG CLEAVAGE PLANES, DRY	ML		3.0	PID=1.0 ppm BΓ=0-50 cpm
12.0 14.0	115385	05/19/93 10:45	7 12 18 20		24		SAA, DRY @10:50 DROVE SHELBY TUBE FROM 14.0' TO 16.0' SAMPLE NO. 115386	ML		3.0	PID=1.0 ppm BΓ=0-50 cpm
16.0		05/19/93 00:00	N/A		N/A		BOTTOM OF BORING = 16 FEET	N/A		N/A	

NOTES:
SOIL BORING USING CME SAMPLER TO 10' THEN USED 3" SPLIT SPOON TO 14/ PUSHED SHELBY TUBE FROM 14' TO 16'.
BACKGROUND READINGS: MT = 1 PPM, BETA/GAMMA = 0-50 CPM

Boring Contractor: PENNSYLVANIA DRILLING
Driller: DON SMITH

SAA = Same as Above
PID = Photoionization Detector
N/A = Not Applicable

PROJECT NUMBER: 20.03.05	PROJECT NAME: CRU2 RI PHASE II FIELD INVESTIGATION	
BORING NUMBER: 11040	COORDINATES: NORTH 482181.43 EAST 1379718.94	DATE:20-MAY-93
GROUND ELEVATION: 589.4	GWL: Depth Date/Time	DATE STARTED: 20-MAY-93
ENGINEER/GEOLOGIST: A COMO	Depth Date/Time	DATE COMPLETE: 20-MAY-93
DRILLING METHOD: HOLLOW STEM AUGER W/CME SAMPLER		

DEPTH	SAMPLE	DATE TIME	BLOWS ON SAMPLE	RECOVERY INCHES		USCS	SYMBOL	TSF	REMARKS
2.5		05/20/93 09:25	N/A	30	VERY HARD, (2.5Y, 5/4) LIGHT OLIVE BROWN, SILTY CLAY, SLIGHT PLASTICITY, SOME (5Y, 3/1) VERY DARK GRAY, SILTY CLAY, SOME GRAVEL, PIECES OF ORGANIC MATERIAL, DRY	CL		4.5	PID=.3 ppm BΓ=0-50 cpm
2.5 5.0	115392	05/20/93 09:25	N/A	30	HARD, (2.5Y, 5/6) LIGHT OLIVE BROWN AND (5Y, 4/3) OLIVE SILTY CLAY, LOW PLASTICITY, SOME GRAVEL, DRY, FEW PIECES OF PLASTIC AND WOOD	CL		2	PID=.3 ppm BΓ=0-50 cpm
5.0 7.5		05/20/93 09:35	N/A	30	SAA	CL		2	PID=.3 ppm BΓ=0-50 cpm
7.5 8.5		05/20/93 09:35	N/A	12	FIRM, (5Y, 4/1) DARK GRAY, SILTY CLAY, NO PLASTICITY, DRY	CL		1.5	PID=.3 ppm BΓ=0-50 cpm
8.5 10.0		05/20/93 09:35	N/A	0	NO RECOVERY	N/A		N/A	
10.0 12.5		05/20/93 10:00	N/A	30	HARD, (5Y, 4/1) DARK GRAY, SILTY CLAY, SLIGHT PLASTICITY, SOME (5Y, 4/3) OLIVE SILTY CLAY, DRY SOME (2.5Y, 5/4) LIGHT OLIVE BROWN CLAYEY SILT	CL		3	PID=.3 ppm BΓ=0-50 cpm
12.5 15.0	115393	05/20/93 10:00	N/A	30	HARD, (2.5Y, 5/4) LIGHT OLIVE BROWN, CLAYEY SILT, SOME (5Y, 5/1) GRAY SILTY CLAY ALONG CLEAVAGE PLANES, LOW PLASTLICITLY, DRY	ML		2	PID=.3 ppm BΓ=0-50 cpm
15.0 17.5		05/20/93 10:30	N/A	30	HARD, (2.5Y, 5/4) LIGHT OLIVE BROWN CLAYEY SILT, (5Y, 5/1) GRAY, SILTY CLAY ALONG CLEAVAGE PLANES, NO PLASTICITY, FEW PIECES OF SMALL GRAVEL, DRY, SOME THIN MOIST LENSES	ML		4.5	PID=.3 ppm BΓ=0-50 cpm
17.5 20.0		05/20/93 10:30	N/A	30	HARD, (2.5Y, 5/3) LIGHT OLIVE BROWN AND (5Y, 5/1) GRAY, CLAYEY SILT, SLIGHT PLASTICSITY, SOME SMALL LIMESTONE GRAVEL, DRY, IRON STAINING ON CLEAVAGE PLANES	ML		4	PID=.3 ppm BΓ=0-50 cpm
20.0 21.0		05/20/93 10:50	N/A	12	SAA	N/A		4	PID=.3 ppm BΓ=0-50 cpm
21.0 22.5		05/20/93 10:50	N/A	18	FIRM, (5Y, 4/1) DARK GRAY, SILTY CLAY, MEDIUM PLASTICITY, SMALL PIECES OF GRAVEL, DRY, THIN WELL GRADED, WET SAND LENSES	CL		2	PID=.3 ppm BΓ=0-50 cpm

NOTES:
SOIL BORING USING CME SAMPLER. PUSHED SHELBY TUBE FROM 15.0' TO 17.0'.
BACKGROUND READINGS: MT = .3 PPM, BETA/GAMMA = 0-50 CPM

Boring Contractor: PENSYLVANIA DRILLING CO
Driller: DON SMITH

SAA = Same as Above
PID = Photoionization Detector
N/A = Not Applicable

PROJECT NUMBER: 20.03.05	PROJECT NAME: CRU2 RI PHASE II FIELD INVESTIGATION	
BORING NUMBER: 11040	COORDINATES: NORTH 482181.43 EAST 1379718.94	DATE:20-MAY-93
GROUND ELEVATION: 589.4	GWL: Depth Date/Time	DATE STARTED: 20-MAY-93
ENGINEER/GEOLOGIST: A COMO	Depth Date/Time	DATE COMPLETE: 20-MAY-93
DRILLING METHOD: HOLLOW STEM AUGER W/CME SAMPLER		

DEPTH	SAMPLE	DATE TIME	BLOWS ON SAMPLE	RECOVERY INCHES		USCS SYMBOL	TSF	REMARKS
22.5 25.0		05/20/93 10:50	N/A	30	SAA	CL	2	PID=.3 ppm BΓ=0-50 cpm
25.0 27.5		05/20/93 14:00	N/A	30	FIRM, (5Y, 4/1) DARK GRAY, SILTY CLAY, MEDIUM PLASTICITY, GRAVEL, MOIST	CL	1.5	PID=.3 ppm BΓ=0-50 cpm
27.5 30.0		05/20/93 14:00	N/A	30	SAA, MOIST	CL	1.5	PID=.3 ppm BΓ=0-50 cpm
30.0 32.5		05/20/93 15:40	N/A	30	FIRM, (5Y, 4/1) DARK GRAY, CLAYEY SILT, SLIGHT PLASTICITY, SOME (2.5Y, 5/2) GRAYISH BROWN, SILTY CLAY, SOME SMALL GRAVEL, DRY, SOME MOIST THIN WELL GRADED SAND LENSES	ML	2	PID=.3 ppm BΓ=0-50 cpm
32.5 35.0		05/20/93 15:40	N/A	30	SAA	ML	2	PID=.3 ppm BΓ=0-50 cpm
35.0 37.5	115396	05/20/93 16:00	N/A	30	SAA	ML	4.5	PID=.3 ppm BΓ=0-50 cpm
37.5 40.0	115397	05/20/93 16:00	N/A	30	SAA	ML	4.5	PID=.3 ppm BΓ=0-50 cpm
40.0		05/20/93 00:00	N/A	N/A	BOTTOM OF BORING = 40 FEET	N/A	N/A	

NOTES:
SOIL BORING USING CME SAMPLER. PUSHED SHELBY TUBE FROM 15.0' TO 17.0'.
BACKGROUND READINGS: MT = .3 PPM, BETA/GAMMA = 0-50 CPM

Boring Contractor: PENSYLVANIA DRILLING CO
Driller: DON SMITH

SAA = Same as Above
PID = Photoionization Detector
N/A = Not Applicable

PROJECT NUMBER: 20.03.05	PROJECT NAME: CRU2 RI PHASE II FIELD INVESTIGATION	
BORING NUMBER: 11041	COORDINATES: NORTH 482213.71 EAST 1379682.69	DATE:19-MAY-93
GROUND ELEVATION: 589.7	GWL: Depth Date/Time	DATE STARTED: 19-MAY-93
ENGINEER/GEOLOGIST: A COMO	Depth Date/Time	DATE COMPLETE: 19-MAY-93
DRILLING METHOD: HOLLOW STEM AUGER W/CME SAMPLER		

DEPTH	SAMPLE	DATE TIME	BLOWS ON SAMPLE	RECOVERY INCHES		USCS SYMBOL	TSF	REMARKS
2.5	115389	05/19/93 13:30	N/A	30	FIRM (2.5Y, 4/4) OLIVE BROWN, CLAYEY SILT, NO PLASTICITY, SOME GRAVEL, ORGANIC MATERIAL, DRY, SOME STYRAFOAM AND WHITE PLASTIC	ML	2	PID=0 ppm BΓ=0-50 cpm
2.5 5.0		05/19/93 13:30	N/A	30	FIRM (2.5Y, 5/3) OLIVE AND (2.5Y, 5/6) LIGHT OLIVE BROWN, SILTY CLAY, MEDIUM PLASTICITY, FEW PIECES OF GRAVEL, DRY	CL	2	PID=0 ppm BΓ=0-50 cpm
5.0 7.5		05/19/93 13:45	N/A	30	FIRM (2.5Y, 5/3) OLIVE AND (2.5Y, 5/6) LIGHT OLIVE BROWN SILTY CLAY, HIGH PLASTICITY, FEW ORGANIC PIECES, MOIST, SOME (5Y, 5/1) GRAY CLAY	CL	1.25	PID=0 ppm BΓ=0-50 cpm
7.5 10.0		05/19/93 13:45	N/A	30	SAA, MOIST	CL	1.25	PID=0 ppm BΓ=0-50 cpm
10.0 12.0		05/19/93 14:00	N/A	24	FIRM (5Y, 4/1) DARK GRAY, SILTY CLAY, MEDIUM PLASTICITY, SOME (2.5Y, 5/6) LIGHT OLIVE BROWN, CLAYEY SILT, MOIST	CL	1	PID=0 ppm BΓ=0-50 cpm
12.0 12.5		05/19/93 14:00	N/A	6	HARD (2.5Y, 5/6) LIGHT OLIVE, BROWN CLAYEY SILT, SLIGHTLY PLASTICITY, SOME (5Y, 5/1) GRAY CLAY ON CLEAVAGE PLANES, DRY	ML	2	PID=0 ppm BΓ=0-50 cpm
12.5 15.0	110410	05/19/93 14:00	N/A	30	SAA, DRY	ML	2	PID=0 ppm BΓ=0-50 cpm
15.0 17.0	115391	05/19/93 14:10	N/A	N/A	PUSHED SHELBY TUBE FROM 15' TO 17'	N/A	N/A	
17.0		05/19/93 00:00	N/A	N/A	BOTTOM OF BORING = 17 FEET	N/A	N/A	

NOTES:
PUSHED SHELBY TUBE FROM 15' TO 17'. USED CME SAMPLER FROM 0.0' TO 15.0'.
BACKGROUND READINGS: MT = 0 PPM, BETA/GAMMA = 0-50 CPM

Boring Contractor: PENNSYLVANIA DRILLING
Driller: DON SMITH, SAM SMITH

SAA = Same as Above
PID = Photoionization Detector
N/A = Not Applicable

PROJECT NUMBER: 602 3.7	PROJECT NAME: CRU2 PHASE I FIELD INVESTIGATION	
BORING NUMBER: 1718	COORDINATES: NORTH 482144.49 EAST 1379619.44	DATE:31-JUL-91
GROUND ELEVATION: 587.5	GWL: Depth Date/Time	DATE STARTED: 31-JUL-91
ENGINEER/GEOLOGIST: J. LEAR	Depth Date/Time	DATE COMPLETE: 07-AUG-91
DRILLING METHOD: AUGER		

DEPTH	SAMPLE	DATE TIME	BLOWS ON	SAMPLE	RECOVERY INCHES		USCS SYMBOL	TSF	REMARKS
1.5	067265	07/31/91 15:00	14 29 33		14	V. DENSE, LIGHT YELLOWISH, BROWN (10YR, 6/4) SILTY CLAY TRACE GRAVEL & TRACE SAND, NO PLASTICITY, DRY.	CL	N/A	PID=0 ppm α=150 ppm BΓ=0 cpm
1.5 3.0	067266	07/31/91 15:05	14 17 19		18	DENSE, BROWN, (10YR, 5/3) SILTY CLAY, SOME GRAVEL, TRACE SAND, NO PLASTICITY, DRY.	CL	N/A	PID=0 ppm α=150 ppm BΓ=0 cpm
3.0 4.5	067267	07/31/91 15:10	19 24 23		18	DENSE, BROWN, (10YR, 5/3) SILTY CLAY, SOME GRAVEL, TRACE SAND, NO PLASTICITY, DRY.	CL	N/A	PID=0 ppm α=150 ppm BΓ=0 cpm
4.5 6.0	067268	07/31/91 15:15	12 19 21		16	MED. DENSE, LIGHT YELLOWISH BROWN (10YR, 6/4) SILTY CLAY, SOME GRAVEL, NO PLASTICITY, DRY. V. STIFF (10YR, 5/4) YELLOWISH BROWN SILTY CLAY, SOME GRAVEL SOME SAND MED. PLASTICITY, SL. MOIST.	CL CL	N/A 2.5	PID=0 ppm α=150 ppm BΓ=0 cpm
6.0 7.5	067269	07/31/91 15:20	9 11 10		16	FIRM DARK GRAY TO YELLOWISH BROWN (10YR, 4/1 TO 10YR, 5/8) SILTY CLAY, SOME SAND, SOME GRAVEL, MED. PLASTICITY, MOIST.	CL	.75	PID=0 ppm α=150 ppm BΓ=0 cpm
7.5 9.0	067271	07/31/91 15:25	6 7 9		18	SOFT OLIVE (5Y, 4/3) CLAY, TRACE CLAY, MED. PLASTICITY, MOIST.	CL	.25	PID=0 ppm α=150-200 ppm BΓ=0 cpm
9.0 10.5	067274	08/01/91 08:30	6 8 9		17	SOFT OLIVE (5Y, 4/3) CLAY, TRACE CLAY, MED. PLASTICITY, MOIST, PUMICE.	CL	.5	PID=0 ppm α=150 ppm BΓ=0 cpm
10.5 12.0	067276	08/01/91 08:35	10 9 11		18	SOFT OLIVE DARK GRAY TO OLIVE, (2.5Y, 4/1 TO 2.5Y, 4/3) CLAY, TRACE SAND, MED. TO HIGH PLASTICITY, V. MOIST.	CL	.5	PID=0 ppm α=150 ppm BΓ=0 cpm
12.0 13.5	067277	08/01/91 08:40	11 16 18		18	SOFT OLIVE, DARK GRAY TO OLIVE, 2.5Y, 4/1 TO 2.5Y, 4/3) CLAY TRACE SAND, MED. TO HIGH PLAS., V. MOIST, 12.75-FIRM, DARK YELLOWISH BROWN TO GRAY 10YR, 4/6 TO 10YR, 5/1 SILTY CLAY, LOW TO MED PLAS., MOIST.	CL CL	.5 1.5	PID=0 ppm α=150 ppm BΓ=0 cpm
13.5 15.0	067278	08/01/91 08:45	18 22 50		18	VERY HARD, BROWN MOTTLED (10YR, 5/3) SILTY CLAY, SOME GRAVEL, SOME SAND, LOW PLASTICITY, MOIST.	CL	4.5	PID=0 ppm α=150-200 ppm BΓ=0 cpm
15.0 16.5	067279	08/01/91 09:00	43 50 58		N/A	VERY HARD, BROWN MOTTLED (10YR, 5/3) SILTY CLAY, SOME GRAVEL, SOME SAND, LOW PLASTICITY, MOIST.	CL	4.5	PID=0 ppm α=150-200 ppm BΓ=0 cpm

NOTES:

SAA = Same as Above
PID = Photoionization Detector
N/A = Not Applicable

PROJECT NUMBER: 602 3.7	PROJECT NAME: CRU2 PHASE I FIELD INVESTIGATION	
BORING NUMBER: 1719	COORDINATES: NORTH 482215.57 EAST 1379699.18	DATE:07-AUG-91
GROUND ELEVATION: 590.1	GWL: Depth Date/Time	DATE STARTED: 07-AUG-91
ENGINEER/GEOLOGIST: J. LEAR	Depth Date/Time	DATE COMPLETE: 10-AUG-91
DRILLING METHOD: AUGER		

DEPTH	SAMPLE	DATE TIME	BLOWS ON SAMPLE	RECOVERY INCHES		USCS SYMBOL	TSF	REMARKS
1.5	067285	08/07/91 14:30	4 14 19	18	STIFF, BROWN, (10YR 4/3) SILTY CLAY, SOME ORGANICS, TRACE COBBLES, LOW PLASTICITY, MOIST. .75'-V. HARD, LIGHT YELLOWISH BROWN, (10YR, 6/4) SILTY CLAY, TRACE COBBLES, DRY.	CL CL	2.0 4.5	PID=0 ppm α=80 ppm BΓ=0 cpm
1.5 3.0	067286	08/07/91 14:35	52 64 4	7	V. DENSE, BROWN, (10YR, 4/3) TRACE SAND, SILTY STYRAPHOME INSTALLATION, SL. MOIST.	ML	N/A	PID=<2.0 ppm α=100-150 ppm BΓ=0 cpm
3.0 4.5	067287	08/07/91 14:40	13 13 15	16	STIFF DARK GRAY (2.5Y, 4/1) SILTY CLAY, TRACE SAND & TRACE GRAVEL, MED PLAST, MOIST.	CL	2.0	PID=0 ppm α=80-120 ppm BΓ=0 cpm
4.5 6.0	067288	08/07/91 14:45	14 13 11	0	NO RECOVERY	N/A	N/A	
6.0 7.5	067289	08/07/91 15:15	13 21 14	18	DENSE, DARK YELLOWISH BROWN (10YR, 4/4) SILT, TRACE SAND, TRACE GRAVEL, MOIST. 6.75'-SOFT, DARK GRAY (2.5Y, 4/1) CLAY, ORGANICS TRACE SAND, MED PLASTICITY, MOIST.	ML CL	N/A .5	PID=1-5 ppm α=80-150 ppm BΓ=0 cpm
7.5 9.0	067290	08/07/91 15:20	13 15 19	0	NO RECOVERY	N/A	N/A	
9.0 10.5	067291	08/07/91 15:25	13 19 21	0	NO RECOVERY	N/A	N/A	
10.5 12.0	067292	08/07/91 15:30	19 15 18	8	SOFT, OLIVE GRAY (2.5Y, 4/2) CLAY, TRACE SAND AND TRACE GRAVEL, MED PLASTICITY, MOIST.	CL	.5	PID=<2 ppm α=80-150 ppm BΓ=0 cpm
12.0 13.5	067293	08/08/91 08:30	43 13 15	3	M. DENSE, BROWN (10YR, 5/3) SILTY CLAY, SOME GRAVEL, LOW TO MED PLASTICITY, MOIST TO WET. * UNABLE TO USE PENTROMETER *	CL	N/A	PID=<2.0 ppm α=80-100 ppm BΓ=0 cpm
13.5 15.0	067294	08/08/91 08:40	11 13 24	14	DENSE, DENSE BROWN (10YR, 5/3) GRAVELLY CLAY, TRACE COBBLES, MED PLAST, WET, ORGANICS. * UNABLE TO USE PENETROMETER *	CL	N/A	PID=0-1 ppm α=80-100 ppm BΓ=0 cpm
15.0 16.5	067295	08/08/91 08:50	13 44 50/5"	14	HARD, BROWN, (10YR, 5/3) GRAVELLY CLAY, SOME ORGANICS, MED PLASTICITY, WET. 15.75-V. HARD, BROWN TO GRAY (10YR 5/3 TO 10YR, 5/1) SILTY CLAY, TRACE GRAVEL, LOW PLASTICITY, MOIST.	CL CL	4.0 4.5	PID=0 ppm α=80-100 ppm BΓ=0 cpm
16.5 18.0	067296	08/08/91 08:55	38 47 50/5"	14	HARD, BROWN (10YR, 5/3) GRAVELLY CLAY, SOME ORGANICS, MED PLAST, WET. - 15.75 - V. HARD, BROWN TO GRAY (10YR, 5/3 TO 10YR, 5/1) SILTY CLAY, TRACE GRAVEL, LOW PLAST, MOIST, NO GRAY (10YR, 5/1), SL MOIST.	CL	4.5	PID=0 ppm α=80-100 ppm BΓ=0 cpm

NOTES:

SAA = Same as Above
PID = Photoionization Detector
N/A = Not Applicable

PROJECT NUMBER: 602 3.7	PROJECT NAME: CRU2 PHASE I FIELD INVESTIGATION	
BORING NUMBER: 1719	COORDINATES: NORTH 482215.57 EAST 1379699.18	DATE:07-AUG-91
GROUND ELEVATION: 590.1	GWL: Depth Date/Time	DATE STARTED: 07-AUG-91
ENGINEER/GEOLOGIST: J. LEAR	Depth Date/Time	DATE COMPLETE: 10-AUG-91
DRILLING METHOD: AUGER		

DEPTH	SAMPLE	DATE	TIME	BLOWS ON	SAMPLE	RECOVERY	INCHES		USCS	SYMBOL	TSF	REMARKS
18.0 19.5	067300	08/08/91	09:00	29 35 48		16		HARD, BROWN (10YR, 5/3) GRAVELLY CLAY, SOME ORGANICS, MED PLAST, WET. - 15.75 - V. HARD, BROWN TO GRAY (10YR, 5/3 TO 10YR, 5/1) SILTY CLAY, TRACE GRAVEL, LOW PLAST, MOIST, NO GRAY (10YR, 5/1), SL MOIST, BROWN MOTTLED (10YR, 5/3).	CL		4.5	PID=0 ppm α=80-100 ppm BΓ=0 cpm

NOTES:

SAA = Same as Above
PID = Photoionization Detector
N/A = Not Applicable

PROJECT NUMBER: 602 3.7	PROJECT NAME: CRU2 PHASE I FIELD INVESTIGATION	
BORING NUMBER: 1720	COORDINATES: NORTH 482215.72 EAST 1379783.27	DATE:10-AUG-91
GROUND ELEVATION: 589.6	GWL: Depth Date/Time	DATE STARTED: 10-AUG-91
ENGINEER/GEOLOGIST: J. LEAR	Depth Date/Time	DATE COMPLETE: 10-AUG-91
DRILLING METHOD: AUGER		

DEPTH	SAMPLE	DATE TIME	BLOWS ON SAMPLE	RECOVERY INCHES		USCS SYMBOL	TSF	REMARKS
1.5	067305	08/10/91 14:00	3 7 15	15	M. DENSE, DARK YELLOWISH BROWN, (10YR, 4/4) CLAYEY SILT, TRACE SAND, GLASS, PLASTIC, MOIST.	ML	N/A	PID=0 ppm α=100 ppm BΓ=0 cpm
1.5 3.0	067306	08/10/91 14:05	13 15 15	18	HARD, BROWN (10YR, 5/3) SILTY CLAY, TRACE GRAVEL PLASTIC, WOOD, BRICK, LOW PLASTICITY, SL. MOIST.	CL	4.0	PID=0 ppm α=100-150 ppm BΓ=0 cpm
3.0 4.5	067307	08/10/91 14:10	18 13 17	18	FIRM, OLIVE (2.5Y, 4/3) SILTY CLAY, TRACE GRAVEL, MED. PLASTICITY, MOIST.	CL	1.5	PID=0 ppm α=80-100 ppm BΓ=0 cpm
4.5 6.0	067308	08/10/91 14:15	10 12 12	18	FIRM, OLIVE (2.5Y, 4/3) SILTY CLAY, TRACE GRAVEL, MED. PLASTICITY, MOIST.	CL	1.5	PID=0 ppm α=80-100 ppm BΓ=0 cpm
6.0 7.5	067309	08/10/91 15:15	19 9 8	16	FIRM, OLIVE, (2.5Y, 4/3) SILTY CLAY, TRACE GRAVEL, MED. PLASTICITY, MOIST, PLASTIC, PAPER, BRICK.	CL	1.5	PID=0 ppm α=80-100 ppm BΓ=0 cpm
7.5 9.0	067310	08/10/91 15:20	7 8 10	18	FIRM, OLIVE GRAY, (2.5Y, 4/2) CLAY, TRACE GRAVEL, PUMICE, MED. PLASTICITY, MOIST.	CL	.75	PID=0 ppm α=80-100 ppm BΓ=0 cpm
9.0 10.5	067312	08/10/91 15:25	23 20 21	18	HARD, YELLOWISH BROWN TO GRAY, (10YR, 5/8 TO 10YR, 6/1) SILTY CLAY, TRACE GRAVEL, SL. MOIST.	CL	4.0	PID=0 ppm α=80-100 ppm BΓ=0 cpm
10.5 12.0	067314	08/10/91 15:30	20 21 22	18	HARD, YELLOWISH BROWN TO GRAY, (10YR, 5/8 TO 10YR, 6/1) SILTY CLAY, TRACE GRAVEL, SL. MOIST.	CL	4.0	PID=0 ppm α=80-100 ppm BΓ=0 cpm
12.0 13.5	067315	08/10/91 15:35	19 17 20	18	HARD, YELLOWISH BROWN TO GRAY, (10YR, 5/8 TO 10YR, 6/1) SILTY CLAY, TRACE GRAVEL, SL. MOIST.	CL	4.0	PID=0 ppm α=80-100 ppm BΓ=0 cpm

NOTES:

SAA = Same as Above
PID = Photoionization Detector
N/A = Not Applicable

PROJECT NUMBER: 602 3.7	PROJECT NAME: CRU2 PHASE I FIELD INVESTIGATION	
BORING NUMBER: 1721	COORDINATES: NORTH 482136.40 EAST 1379785.34	DATE:26-JUL-91
GROUND ELEVATION: 588.6	GWL: Depth Date/Time	DATE STARTED: 26-JUL-91
ENGINEER/GEOLOGIST: J. LEAR	Depth Date/Time	DATE COMPLETE: 28-JUL-91
DRILLING METHOD: AUGER		

DEPTH	SAMPLE	DATE TIME	BLOWS ON SAMPLE	RECOVERY INCHES		USCS SYMBOL	TSF	REMARKS
1.5	067228	07/26/91 15:00	17 39 28	18	V HARD, BROWN (10YR, 5/3) SILTY CLAY, SOME COBBLES, V LOW PLASTICITY, DRY.	CL	4.5	PID=0 ppm α=150-200 ppm βΓ=2 cpm
1.5 3.0	067229	07/26/91 15:05	14 21 19	8	V HARD, BROWN (10YR, 5/3) SILTY CLAY, SOME COBBLES, V LOW PLASTICITY, DRY, HARD, SL. MOIST.	CL	3.0	PID=0 ppm α=100 ppm βΓ=0 cpm
3.0 4.5	067230	07/26/91 15:10	17 14 11	12	HARD, LIGHT OLIVE BROWN (2.5Y, 5/4) SILTY CLAY, TRACE GRAVEL, LOW TO MED PLASTICITY, MOIST.	CL	2.5	PID=1-3 ppm α=100 ppm βΓ=0 cpm
4.5 6.0	067231	07/26/91 15:15	10 9 7	0	NO RECOVERY	N/A	N/A	
6.0 7.5	067232	07/26/91 16:00	4 10 12	0	NO RECOVERY	N/A	N/A	
7.5 9.0	067233	07/26/91 16:05	14 15 17	5	SOFT, VERY DARK GRAY, (5Y, 3/) SILTY CLAY, TRACE SAND, MED PLASTICITY, MOIST TO WET.	CL	.50	PID=1-3 ppm α=100 ppm βΓ=0 cpm
9.0 10.5	067234	07/26/91 16:10	10 17 18	16	SOFT, OLIVE GRAY, (5Y, 4/2) SILTY CLAY, TRACE SAND MED PLASTICITY, MOIST, FIRM, VERY DARK GRAY (5Y, 3/) SILTY CLAY, TRACE SAND MED PLASTICITY, MOIST.	CL CL	.25 1.0	PID=1-3 ppm α=100 ppm βΓ=0 cpm
10.5 12.0	067235	07/26/91 16:15	20 22 21	0	NO RECOVERY	N/A	N/A	
12.0 13.5	067236	07/27/91 10:30	21 20 24	16	FIRM, OLIVE GRAY (5Y, 4/2) SILTY CLAY MED PLASTICITY, MOIST, 12.6-FIRM YELLOWISH BROWN (10YR, 5/6) SILTY CLAY TRACE SAND, TRACE GRAVEL, SL. MOIST, LOW PLASTICITY.	CL CL	1.5 1.5	PID=1.0 ppm α=80-100 ppm βΓ=0 cpm
13.5 15.0	067237	07/27/91 10:35	13 10 11	8	FIRM, GRAY TO YELLOWISH BROWN (10YR, 5/1 TO 10YR, 5/6) MOTTLED SILTY CLAY, TRACE SAND & GRAVEL, MOIST.	CL	1.0	PID=0 ppm α=80 ppm βΓ=0 cpm
15.0 16.5	067238	07/28/91 10:30	3 7 10	10	FIRM, BROWN (10YR, 5/3) SILTY CLAY, TRACE SAND, TRACE GRAVEL, MOIST, LOW PLASTICITY.	CL	2.0	PID=0 ppm α=80 ppm βΓ=0 cpm

NOTES:

SAA = Same as Above
PID = Photoionization Detector
N/A = Not Applicable

PROJECT NUMBER: 602 3.7	PROJECT NAME: CRU2 PHASE I FIELD·INVESTIGATION	
BORING NUMBER: 1722	COORDINATES: NORTH 482114.81 EAST 1379739.45	DATE:29-JUL-91
GROUND ELEVATION: 588.4	GWL: Depth Date/Time	DATE STARTED: 29-JUL-91
ENGINEER/GEOLOGIST: J. LEAR	Depth Date/Time	DATE COMPLETE: 30-JUL-91
DRILLING METHOD: AUGER		

DEPTH	SAMPLE	DATE TIME	BLOWS ON SAMPLE	RECOVERY INCHES		USCS SYMBOL	TSF	REMARKS
1.5	067249	07/29/91 17:00	9 37 46	16	V. DENSE, BROWNISH YELLOW (10YR, 6/4) GRAVELLY CLAY, SOME SAND, V. LOW PLASTICITY, SOME ORGANIC, V. DRY.	CL	N/A	PID=0 ppm α=150-200 ppm BΓ=0 cpm
1.5 3.0	067250	07/29/91 17:05	27 23 12	14	STYRAPHONE & WOODCHIPS - 1.75' - V. HARD, DARK YELLOWISH BROWN TO DARK GRAY (10YR, 4/4) TO (10YR, 4/1) SILTY CLAY, SOME GRAVEL, LOW PLASTICITY, DAMP.	CL	4.5	PID=10-50 ppm α=8000 ppm BΓ=20 cpm
3.0 4.5	067251	07/29/91 17:10	36 34 29	5	HARD, OLIVE GRAY (5Y, 4/2) SILTY CLAY, SOME GRAVEL, LOW PLASTICITY TO MED. PLASTICITY, SL. MOIST.	CL	3.75	PID=5-10 ppm α=10000-1900 pp BΓ=50-100 cpm
4.5 6.0	067252	07/29/91 17:15	22 19 43	0	NO RECOVERY	N/A	N/A	
6.0 7.5	067253	07/30/91 10:00	50	6	DARK OLIVE GRAY (5Y, 3/2) MED, SATURATED, 6.4'-LIMESTONE, AUGERING TO 8.0 FT.	N/A	N/A	PID=5-10 ppm α=15000 ppm BΓ=50-100 cpm
8.0 9.5	067254	07/30/91 14:10	14 28 17	0	NO RECOVERY	N/A	N/A	
9.5 11.0	067255	07/30/91 14:20	13 15 18	0	NO RECOVERY, AUGERING TO 11.0'	N/A	N/A	
11.0 12.5	067256	07/30/91 15:30	6 6 13	14	M. DENSE, LIGHT YELLOWISH BROWN, (10YR, 6/4) SILT, SOME COBBLES, DRY, VERY STIFF, YELLOWISH BROWN TO DARK GRAY (10YR, 4/6) TO (10YR, 4/2) SILTY CLAY, LOW TO MED. PLASTICITY, MOIST.	ML CL	N/A 2.5	PID=0 ppm α=150 ppm BΓ=0 cpm
12.5 14.0	067258	07/30/91 15:45	10 11 15	16	M. DENSE, LIGHT YELLOWISH BROWN (10YR, 6/4) SILT, SOME COBBLES, TRACE SAND, DRY.	ML	N/A	PID=0 ppm α=150 ppm BΓ=0 cpm
14.0 16.5	067259	07/30/91 15:40	25 27 28	15	HARD, YELLOWISH BROWN, TO GRAY (10YR, 4/6 TO 10YR, 5/1) SILTY CLAY, TRACE GRAVEL, LOW PLASTICITY, SL. MOIST.	CL	4.0	PID=0 ppm α=150 ppm BΓ=0 cpm

NOTES:

SAA = Same as Above
PID = Photoionization Detector
N/A = Not Applicable

000553

PROJECT NUMBER: 602 3.7	PROJECT NAME: CRU2 PHASE I FIELD INVESTIGATION	
BORING NUMBER: 1808	COORDINATES: NORTH 482142.91 EAST 1379622.56	DATE:27-AUG-91
GROUND ELEVATION: 587.2	GWL: Depth Date/Time	DATE STARTED: 27-AUG-91
ENGINEER/GEOLOGIST: G. MARSHALL	Depth Date/Time	DATE COMPLETE: 27-AUG-91
DRILLING METHOD: AUGER		

DEPTH	SAMPLE	DATE TIME	BLOWS ON SAMPLE	RECOVERY INCHES		USCS SYMBOL	TSF	REMARKS
1.5	067392	08/27/91 17:49	4 4 6	16	DARK GRAYISH BROWN (10YR, 4/2) CLAY, SILTY WITH TRACE OF GRAVEL, ORGANICS (GRASS & ROOTS), DRY, NO PLASTICITY.	CL	4.5	PID=0 ppm α=0 ppm BΓ=0 cpm
1.5 3.0	067393	08/27/91 17:58	5 6 8	14	DARK BROWN (10YR, 3/3) CLAY, SILTY, SOME SAND & GRAVEL, ROOTS, DRY, NO PLASTICITY.	CL	2.5	PID=0 ppm α=0 ppm BΓ=0 cpm
3.0 4.5	067394	08/27/91 18:15	15 16 16	14	YELLOWISH BROWN (10YR, 5/6) CLAY, SILTY, SOME SAND & GRAVEL, DRY, NO PLASTICITY.	CL	>4.5	PID=0 ppm α=0 ppm BΓ=0 cpm
4.5 6.0	067395	08/27/91 18:32	13 12 16	13	DARK YELLOWISH BROWN (10YR, 4/4) MODLE WITH A DARK RED (2.5YR, 3/6) CLAY, SILTY WITH SOME SAND & GRAVEL, DRY, NO PLASTICITY.	CL	1.0	PID=0 ppm α=0 ppm BΓ=0 cpm
6.0 7.5	067404	08/27/91 19:00	13 12 8	18	LIGHT OLIVE BROWN (2.5YR, 5/4) CLAY, SILTY WITH SOME SAND & GRAVEL, MOIST, MED PLASTICITY.	CL	1.0	PID=0 ppm α=0 ppm BΓ=0 cpm
7.5 9.0	067396	08/27/91 19:15	5 6 9	18	OLIVE (5Y, 4/3) CLAY, TRACE GRAVEL, MOIST, HIGH PLASTICITY.	CL	.75	PID=0 ppm α=0 ppm BΓ=0 cpm
9.0 10.5	067397	08/27/91 19:30	3 5 5	18	OLIVE GRAY (5Y, 4/2) CLAY, SOME SAND & GRAVEL, MOIST, MED PLASTICITY.	CL	2.0	PID=0 ppm α=0 ppm BΓ=0 cpm
10.5 12.0	067405	08/27/91 19:41	5 6 7	18	OLIVE (5Y, 4/4) CLAY, SOME SAND AND GRAVEL, MOIST, MED PLASTICITY.	CL	1.25	PID=0 ppm α=0 ppm BΓ=0 cpm
12.0 13.5	067399	08/27/91 20:11	8 10 15	18	DARK OLIVE GRAY (5Y, 3/2) CLAY, SOME SAND & GRAVEL, MOIST, MED PLASTICITY.	CL	1.75	PID=0 ppm α=0 ppm BΓ=0 cpm
13.5 15.0	067406	08/27/91 20:48	9 13 23	18	BROWN (10YR, 5/3) CLAY, SILTY, SOME SAND & GRAVEL, NO PLASTICITY, MOIST.	CL	>4.5	PID=0 ppm α=0 ppm BΓ=0 cpm
15.0 16.5	067401	08/27/91 21:30	28 41 47	18	BROWN (10YR, 5/3) CLAY, SOME SAND AND GRAVEL, MOIST, LOW PLASTICITY.	CL	>4.5	PID=0 ppm α=0 ppm BΓ=0 cpm

NOTES:

SAA = Same as Above
PID = Photoionization Detector
N/A = Not Applicable

PROJECT NUMBER: 602 3.7	PROJECT NAME: CRU2 PHASE I FIELD INVESTIGATION	
BORING NUMBER: 1888	COORDINATES: NORTH 482124.84 EAST 1379761.91	DATE:23-FEB-92
GROUND ELEVATION: 588.5	GWL: Depth Date/Time	DATE STARTED: 23-FEB-92
ENGINEER/GEOLOGIST: KEN MARION	Depth Date/Time	DATE COMPLETE: 23-FEB-92
DRILLING METHOD: AUGER		

DEPTH	SAMPLE DATE TIME	BLOWS ON SAMPLE	RECOVERY INCHES		USCS SYMBOL	TSF	REMARKS
1.5	067714 02/23/92 13:50	8 15 27	14	VERY STIFF LIGHT OLIVE BROWN (2.5Y, 5/4) GRAVELLY CLAY WITH SAND AND ORGANIC MATTER (IE ROOT STEMS), MEDIUM PLASTICITY, SLIGHTLY MOIST	CL	4.0	PID=0 ppm α=100 ppm BΓ=0 cpm
1.5 3.0	067715 02/23/92 13:55	13 28 47	15	VERY STIFF LIGHT OLIVE BROWN (2.5Y, 5/3) GRAVELLY CLAY WITH SAND, A LITTLE YELLOWISH BROWN (10YR, 5/6) WEATHERING, AND TRACE ORGANIC MATTER, MEDIUM PLASTICITY, SLIGHTLY MOIST	CL	4.0	PID=0 ppm α=100 ppm BΓ=0 cpm
3.0 4.5	067716 02/23/92 14:02	13 10 16	12	STIFF OLIVE (5Y, 5/3) GRAVELLY CLAY WITH SAND, MEDIUM PLASTICITY, MOIST.	CL	1.5	PID=0 ppm α=100 ppm BΓ=0 cpm
5.0 6.0	067717 02/23/92 14:38	8 5 8	18	MEDIUM STIFF OLIVE GRAY (5Y, 5/2) CLAY WITH SAND AND GRAVEL, TRACE ORGANIC MATTER, A PIECE OF STRING, MEDIUM PLASTICITY, VERY MOIST.	CL	1.0	PID=0 ppm α=400 ppm BΓ=0 cpm
6.0 7.5	067718 02/23/92 14:51	8 13 19	18	VERY STIFF VERY DARK BROWN (10YR, 2/2) CLAY, LOW PLASTICITY, SLIGHTLY MOIST.	CL	3.25	PID=0 ppm α=300 ppm BΓ=0 cpm
7.5 9.0	067720 02/23/92 15:40	16 18 21	18	STIFF BLACK (5Y, 2.5/1) CLAY WITH TRACE SAND AND ORGANIC MATTER, LOW PLASTICITY, SLIGHTLY MOIST	CL	2.0	PID=0 ppm α=100 ppm BΓ=0 cpm
9.0 10.5	067721 02/23/92 16:00	14 15 22	18	VERY STIFF MOTTLED GRAY (5Y, 5/1) AND YELLOWISH BROWN (10YR, 5/8) CLAY, HIGH PLASTICITY, MOIST	CL	2.5	PID=0 ppm α=100 ppm BΓ=0 cpm
10.5 12.0	067722 02/23/92 16:30	11 14 18	18	STIFF MOTTLED GRAY (105Y, 5/1) AND YELLOWISH BROWN (10YR, 5/8) CLAY, TRACE WOOD FRAGMENTS, PIECE OF STRING, MEDIUM PLASTICITY, MOIST. STIFF VERY DARK GRAY (5Y, 3/1) CLAY, HIGH PLASTICITY, SLIGHTLY MOIST	CL CL	1.75 1.7	PID=0 ppm α=100 ppm BΓ=0 cpm
12.0 13.5	067725 02/23/92 17:20	9 9 11	18	STIFF LIGHT OLIVE BROWN (2.5Y, 5/4) CLAY WITH YELLOWISH BROWN (10YR, 5/8) AND OLIVE GRAY (5Y, 5/2) MOTTLING AND TRACE SAND, HIGH PLASTICITY, MOIST.	CL	2.0	PID=0 ppm α=100 ppm BΓ=0 cpm
13.5 15.0	067726 02/23/92 17:30	11 10 17	18	STIFF LIGHT OLIVE BROWN (2.5Y, 5/4) CLAY WITH YELLOWISH BROWN (10YR, 5/8) AND OLIVE GRAY (5Y, 5/2) MOTTLING AND TRACE SAND, HIGH PLASTICITY, MOIST.	CL	2.0	PID=0 ppm α=100 ppm BΓ=0 cpm

NOTES:

SAA = Same as Above
PID = Photoionization Detector
N/A = Not Applicable

PROJECT NUMBER: 602 3.6	PROJECT NAME:	
BORING NUMBER: 1889	COORDINATES: NORTH 482121.36 EAST 1379765.86	DATE:25-FEB-92
GROUND ELEVATION: 588.3	GWL: Depth Date/Time	DATE STARTED: 25-FEB-92
ENGINEER/GEOLOGIST: K.MARION/C.GRUB	Depth Date/Time	DATE COMPLETE: 25-FEB-92
DRILLING METHOD: AUGER		

DEPTH	SAMPLE	DATE TIME	BLOWS ON SAMPLE	RECOVERY INCHES		USCS SYMBOL	TSF	REMARKS
1.5	067730	02/25/92 13:50	5 13 21	15	VERY STIFF (10YR, 5/4) YELLOWISH BROWN SILTY CLAY, SOME SAND & FINE TO COARSE GRAVEL, LOW PLASTICITY, SLIGHTLY MOIST, (TRACE ROOT STEMS)	CL	2.5	PID=0 ppm α=0 ppm βΓ=100 cpm
1.5 3.0	067731	02/25/92 13:57	16 19 18	15	VERY STIFF (10YR, 5/6) YELLOWISH BROWN SILTY CLAY, SOME SAND AND GRAVEL, TRACE ORGANIC MATTER (WOOD & ROOT STEMS) PIECE OF GRAVEL SIZE BLACK (5Y, 2.5/1) ORGANIC MATTER, SLIGHTLY MOIST, LOW PLASTICITY	CL	3.5	PID=0 ppm α=0 ppm βΓ=100 cpm
3.0 4.5	067732	02/25/92 14:04	10 9 13	10	STIFF (2.5Y, 4/4) OLIVE BROWN SANDY CLAY, SOME FINE TO COARSE GRAVEL, TRACE SILT, ORANGISH WEATHERING, MEDIUM PLASTICITY, MOIST (WOOD)	CL	1.25	PID=0 ppm α=0 ppm βΓ=120 cpm
4.5 6.0	067733	02/25/92 14:30	8 6 11	18	MEDIUM STIFF (5Y, 4/2) OLIVE GRAY GRAVELLY CLAY, SOME SAND, TRACE GRAYISH BROWN MATERIAL, TRACE ORGANICS (IE ROOTS & WOOD) MEDIUM PLASTICITY, MOIST.	CL	.75	PID=0 ppm α=0 ppm βΓ=100 cpm
6.0 7.5	067734	02/25/92 14:50	8 11 14	18	SOFT (2.5Y, 4/3) OLIVE SILTY CLAY, SOME SAND AND FINE TO COARSE GRAVEL, TRACE GRASS AND ROOTS MEDIUM PLASTICITY, MOIST. 7.0 FT. VERY STIFF (5Y, 3/1) VERY DARK GRAY SILTY CLAY, TRACE OF ORGANIC MATTER, LOW PLASTICITY TO NON-PLASTIC, MOIST	CL CL	.5 3.5	PID=0 ppm α=0 ppm βΓ=80-100 cpm
7.5 9.0	067735	02/25/92 15:13	19 22 26	18	VERY STIFF (5Y, 3/1) VERY DARK GRAY SILTY CLAY, TRACE ORGANIC MATTER, MEDIUM PLASTICITY, MOIST. 8.5 FT. STIFF (5Y, 4/2) OLIVE GRAY SILTY CLAY W/ (2.5Y, 5/4) YELLOWISH BROWN MOTTLING MEDIUM TO HIGH PLASTICITY, MOIST.	CL CL	2.5 2.0	PID=0 ppm α=0 ppm βΓ=100 cpm
9.0 10.5	067736	02/25/92 15:26	16 18 21	18	STIFF MOTTLED (5Y, 5/1) GRAY TO (10YR 5/6) YELLOWISH BROWN, VERY SILTY CLAY, TRACE ORGANICS LOW TO NON-PLASTICITY, MOIST.	CL	2.0	PID=0 ppm α=0 ppm βΓ=80-100 cpm
10.5 12.0	067737	02/25/92 15:46	10 15 17	18	STIFF MOTTLED (5Y, 6/1) GRAY TO (10YR, 5/6) YELLOWISH BROWN VERY SILTY CLAY, TRACE ORGANICS LOW TO NO PLASTICITY, MOIST.	CL	2.0	PID=0 ppm α=0 ppm βΓ=80-100 cpm
12.0 13.5	067738	02/25/92 16:07	17 15 14	18	VERY STIFF MOTTLED (5Y, 6/1) GRAY TO (10YR, 5/6) YELLOWISH BROWN VERY SILTY CLAY, TRACE ORGANICS, LOW TO NO PLASTICITY, MOIST. 13.0 FT. MEDIUM STIFF, 10YR, 5/6 YELLOWISH BROWN TO 2.5Y, 3/2 VERY DARK GRAYISH BROWN SILTY CLAY, LOW PLASTICITY, MOIST.	CL CL	2.25 1.0	PID=0 ppm α=0 ppm βΓ=100 cpm
13.5 15.5	067739	02/25/92 16:20	8 14 20	24	VERY STIFF LIGHT OLIVE BROWN (2.5Y, 5/6) AND LIGHT GRAY (5Y, 6/1) SILTY CLAY WITH SAND AND TRACE ORGANIC MATTER, LOW PLASTICITY, MOIST. 14.5 FT. DENSE LIGHT OLIVE BROWN (2.5Y, 5/4) AND LIGHT GRAY (5Y, 6/1) CLAYEY SILT WITH TRACE SAND AND FINE	CL ML	2.5	PID=0 ppm α=0 ppm βΓ=100 cpm
15.5 17.5	067740	02/25/92 16:50	32 78 53	24	SOFT OLIVE YELLOW (2.5Y, 6/6) SILTY CLAY WITH SOME SAND, LOW PLASTICITY, WET. 16.0 FT. VERY STIFF OLIVE YELLOW (2.5Y, 6/6) SILTY CLAY WITH SOME SAND AND A COUPLE PIECES OF LIMESTONE COBBLES, SLIGHTLY MOIST, LOW PLASTICITY	CL CL	.5 4.0	PID=0 ppm α=0 ppm βΓ=100 cpm

NOTES:

SAA = Same as Above
PID = Photoionization Detector
N/A = Not Applicable

PROJECT NUMBER: 20.03.05	PROJECT NAME: CRU2 RI PHASE II FIELD INVESTIGATION	
BORING NUMBER: 1947	COORDINATES: NORTH 482108.00 EAST 1379906.05	DATE:26-APR-93
GROUND ELEVATION: 590.2	GWL: Depth Date/Time	DATE STARTED: 26-APR-93
ENGINEER/GEOLOGIST: J REAGAN	Depth Date/Time	DATE COMPLETE: 28-APR-93
DRILLING METHOD: HOLLOW STEM AUGER		

DEPTH	SAMPLE	DATE TIME	BLOWS ON	SAMPLE	RECOVERY	INCHES		USCS SYMBOL	TSF	REMARKS
6.0		04/26/93 00:00	N/A		N/A		DESTRUCTIVE DRILLING FROM 0' TO 6'	N/A	N/A	
6.0 8.0	111639	04/26/93 14:20	N/A		N/A		SHELBY TUBE	CL	N/A	PID=0 ppm BΓ=50 cpm
8.0 8.5	111640	04/26/93 14:40	8		6		VERY STIFF,(10YR 5/6)YELLOWISH BROWN, SILTY CLAY, LOW PLASTICITY, MOIST	CL	2.5	PID=0 ppm BΓ=50 cpm
8.5 9.0	111640	04/26/93 14:40	10		6		SAA	CL	2.5	PID=0 ppm BΓ=50 cpm
9.0 9.5	111640	04/26/93 14:40	13		6		SAA	CL	2.5	PID=0 ppm BΓ=50 cpm
9.5 10.0	111640	04/26/93 14:40	13		6		SAA	CL	2.5	PID=0 ppm BΓ=50 cpm
10.0 10.5	111641	04/26/93 16:25	4		6		VERY STIFF, (10YR,5/4) YELLOWISH BROWN, SILTY CLAY, MOTTLED, SOME FINE SAND, LOW PLASTICITY, MOIST	CL	3.0	PID=0 ppm BΓ=80 cpm
10.5 11.0	111641	04/26/93 16:25	8		6		SAA	CL	3	PID=0 ppm BΓ=80 cpm
11.0 11.5	111641	04/26/93 16:25	8		6		SAA	CL	3.0	PID=0 ppm BΓ=80 cpm
11.5 12.0	111642	04/26/93 16:30	7		6		SAA	CL	3.0	PID=0 ppm BΓ=60 cpm
12.0 12.5	111642	04/26/93 16:30	8		6		SAA	CL	3	PID=0 ppm BΓ=60 cpm
12.5 13.0	111642	04/26/93 16:30	8		0		NO RECOVERY	N/A	N/A	
13.0 13.5	111643	04/26/93 16:40	3		6		STIFF, (10YR,5/4) YELLOWISH BROWN, SILTY CLAY, MOTTLED, LOW PLASTICITY, MOIST	CL	1.5	PID=0 ppm BΓ=60 cpm

NOTES:
TEMPORARY WELL SET AS PER INSTRUCTIONS FROM JOHN WHITEHEAD-SEE ATTACHED DRAWING WITH FADL OF 04/27/93.
BACKGROUND READINGS: BETA/GAMMA = 50 CPM, HNU = 0 PPM

Boring Contractor: PENNSYLVANIA DRILLING
Driller: MARTY WATRAL
Drilling Equipment: ACKER SOIL SENTRY

SAA = Same as Above
PID = Photoionization Detector
N/A = Not Applicable

PROJECT NUMBER: 20.03.05	PROJECT NAME: CRU2 RI PHASE II FIELD INVESTIGATION	
BORING NUMBER: 1947	COORDINATES: NORTH 482108.00 EAST 1379906.05	DATE:26-APR-93
GROUND ELEVATION: 590.2	GWL: Depth Date/Time	DATE STARTED: 26-APR-93
ENGINEER/GEOLOGIST: J REAGAN	Depth Date/Time	DATE COMPLETE: 28-APR-93
DRILLING METHOD: HOLLOW STEM AUGER		

DEPTH	SAMPLE	DATE TIME	BLOWS ON SAMPLE	RECOVERY INCHES		USCS SYMBOL	TSF	REMARKS
13.5 14.0	111643	04/26/93 16:40	10	6	SAA	CL	1.5	PID=0 ppm BΓ=60 cpm
14.0 14.5	111643	04/26/93 16:40	13	6	SAA	CL	1.5	PID=0 ppm BΓ=60 cpm
14.5 15.0	111644	04/26/93 16:50	6	6	STIFF, (10YR,5/4) YELLOWISH BROWN, SILTY CLAY, MOTTLED, LOW PLASTICITY, MOIST	CL	1.5	PID=0 ppm BΓ=80 cpm
15.0 15.5	111644	04/26/93 16:50	10	6	SAA	CL	1.5	PID=0 ppm BΓ=80 cpm
15.5 16.0	111644	04/26/93 16:50	13	4	SAA	CL	1.5	PID=0 ppm BΓ=80 cpm
16.0 16.5	111645	04/26/93 16:55	8	6	SAA	CL	1.5	PID=0 ppm BΓ=60 cpm
16.5 17.0	111645	04/26/93 16:55	10	6	SAA	CL	1.5	PID=0 ppm BΓ=60 cpm
17.0 17.5	111645	04/26/93 16:55	14	0	NO RECOVERY	N/A	N/A	
17.5 18.0	111646	04/26/93 17:05	8	6	SAA	CL	1.5	PID=0 ppm BΓ=80 cpm
18.0 18.5	111646	04/26/93 17:05	17	6	SAA	CL	1.5	PID=0 ppm BΓ=80 cpm
18.5 19.0	111646	04/26/93 17:05	24	6	SAA	CL	1.5	PID=0 ppm BΓ=80 cpm
19.0 19.5	111647	04/26/93 17:15	4	6	SAA	CL	1.5	PID=0 ppm BΓ=80 cpm
19.5 20.0	111647	04/26/93 17:15	8	6	SAA	CL	1.5	PID=0 ppm BΓ=80 cpm

NOTES:
TEMPORARY WELL SET AS PER INSTRUCTIONS FROM JOHN WHITEHEAD-SEE ATTACHED DRAWING WITH FADL OF 04/27/93.
BACKGROUND READINGS: BETA/GAMMA = 50 CPM, HNU = 0 PPM

Boring Contractor: PENNSYLVANIA DRILLING
Driller: MARTY WATRAL
Drilling Equipment: ACKER SOIL SENTRY

SAA = Same as Above
PID = Photoionization Detector
N/A = Not Applicable

PROJECT NUMBER: 20.03.05	PROJECT NAME: CRU2 RI PHASE II FIELD INVESTIGATION	
BORING NUMBER: 1947	COORDINATES: NORTH 482108.00 EAST 1379906.05	DATE:26-APR-93
GROUND ELEVATION: 590.2	GWL: Depth Date/Time	DATE STARTED: 26-APR-93
ENGINEER/GEOLOGIST: J REAGAN	Depth Date/Time	DATE COMPLETE: 28-APR-93
DRILLING METHOD: HOLLOW STEM AUGER		

DEPTH	SAMPLE	DATE TIME	BLOWS ON	SAMPLE	RECOVERY	INCHES		USCS	SYMBOL	TSF	REMARKS
20.0 20.5	111647	04/26/93 17:15	12		6		SAA	CL		1.5	PID=0 ppm BΓ=80 cpm
20.5		04/26/93 00:00	N/A		N/A		BOTTOM OF BORING = 20.5 FEET	N/A		N/A	

NOTES:
TEMPORARY WELL SET AS PER INSTRUCTIONS FROM JOHN WHITEHEAD-SEE ATTACHED DRAWING WITH FADL OF 04/27/93.
BACKGROUND READINGS: BETA/GAMMA = 50 CPM, HNU = 0 PPM

Boring Contractor: PENNSYLVANIA DRILLING
Driller: MARTY WATRAL
Drilling Equipment: ACKER SOIL SENTRY

SAA = Same as Above
PID = Photoionization Detector
N/A = Not Applicable

02/02/94 13:57

PROJECT NUMBER: 20.03.05	PROJECT NAME: CRU2 RI PHASE II FIELD INVESTIGATION	
BORING NUMBER: 1950	COORDINATES: NORTH 482202.10 EAST 1379549.67	DATE:05-MAY-93
GROUND ELEVATION: 582.39	GWL: Depth Date/Time	DATE STARTED: 05-MAY-93
ENGINEER/GEOLOGIST: J REGAN	Depth Date/Time	DATE COMPLETE: 06-MAY-93
DRILLING METHOD: HOLLOW STEM AUGER		

DEPTH	SAMPLE	DATE TIME	BLOWS ON SAMPLE	RECOVERY INCHES		USCS SYMBOL	TSF	REMARKS
.5	111678	05/05/93 13:05	3	6	STIFF, (2.5Y, 3/3) DARK OLIVE BROWN, SILTY FINE SAND, LOW PLASTICITY, MOIST	ML	1.5	PID=0 ppm α=0 ppm βΓ=50 cpm
.5 1.0	111679	05/05/93 13:05	10	6	VERY STIFF, (2.5Y, 4/4), OLIVE BROWN, SILTY CLAY, MEDIUM PLASTICITY, MOIST	CL	3.5	PID=0 ppm α=0 ppm βΓ=50 cpm
1.0 1.5	111680	05/05/93 13:05	10	6	SAA	CL	3	PID=0 ppm α=0 ppm βΓ=50 cpm
1.5 2.0	111681	05/05/93 13:05	14	6	SAA	CL	3	PID=0 ppm α=0 ppm βΓ=50 cpm
2.0 3.5	111682	05/05/93 13:10	N/A	16	SHELBY TUBE	N/A	N/A	PID=.4 ppm α=0 ppm βΓ=50 cpm
3.5 4.0	111682	05/05/93 13:10	N/A	N/A	SHELBY TUBE, (2.5Y, 5/4) LIGHT OLIVE BROWN, SILTY CLAY, SOME GRAVEL, MOIST	CL	N/A	PID=.4 ppm α=0 ppm βΓ=50 cpm
4.0 4.5	111683	05/05/93 13:30	4	6	STIFF, (2.5Y, 5/4) LIGHT OLIVE BROWN, CLAY, SOME GRAVELS, MOIST	CL	2	PID=.5 ppm α=0 ppm βΓ=50 cpm
4.5 5.0	111683	05/05/93 13:30	8	6	HARD, (2.5Y, 5/4) LIGHT OLIVE BROWN, CLAY, SOME GRAVELS, MOIST	CL	4.5	PID=.5 ppm α=0 ppm βΓ=50 cpm
5.0 5.5	111684	05/05/93 13:30	10	6	VERY STIFF, (2.5Y, 5/4) LIGHT OLIVE BROWN, CLAY, SOME GRAVELS, VERY MOIST	CL	2.5	PID=.5 ppm α=0 ppm βΓ=50 cpm
5.5 6.0	111685	05/05/93 13:30	16	6	HARD, (2.5Y, 5/4) LIGHT OLIVE BROWN, CLAY, SOME GRAVELS, MOIST	CL	4.25	PID=.5 ppm α=0 ppm βΓ=50 cpm
6.0 6.5	111686	05/05/93 13:45	10	6	VERY STIFF, (2.5Y, 5/4) LIGHT OLIVE BROWN, SILTY CLAY, TRACE FINE SAND, LOW PLASTICITY, MOIST	CL	3	PID=.5 ppm α=0 ppm βΓ=50 cpm
6.5 7.0	111687	05/05/93 13:45	16	6	SAA	CL	3	PID=.5 ppm α=0 ppm βΓ=50 cpm
7.0 7.5	111688	05/05/93 13:45	18	6	SAA	CL	3	PID=.5 ppm α=0 ppm βΓ=50 cpm

NOTES:
BACKGROUND READINGS: BETA/GAMMA = 50-70 CPM, ALPHA = 0 CPM, MT = .5 PPM

Boring Contractor: PENNSYLVANIA DRILLING CO.
Driller: M WATRAL, B DEILEY
Drilling Equipment: ACKER SOIL SENTRY

SAA = Same as Above
PID = Photoionization Detector
N/A = Not Applicable

000560

PROJECT NUMBER: 20.03.05	PROJECT NAME: CRU2 RI PHASE II FIELD INVESTIGATION	
BORING NUMBER: 1950	COORDINATES: NORTH 482202.10 EAST 1379549.67	DATE:05-MAY-93
GROUND ELEVATION: 582.39	GWL: Depth Date/Time	DATE STARTED: 05-MAY-93
ENGINEER/GEOLOGIST: J REGAN	Depth Date/Time	DATE COMPLETE: 06-MAY-93
DRILLING METHOD: HOLLOW STEM AUGER		

DEPTH	SAMPLE	DATE TIME	BLOWS ON SAMPLE	RECOVERY INCHES		USCS SYMBOL	TSF	REMARKS
7.5 8.0	115268	05/05/93 13:45	25	6	VERY STIFF, (2.5Y, 5/4) LIGHT OLIVE BROWN, SILTY CLAY, TRACE OF FINE SAND, LOW PLASTICITY, MOIST	CL	3	PID=.5 ppm α=0 ppm BΓ=50 cpm
8.0 9.5	115269	05/05/93 14:00	N/A	18	SHELBY TUBE	N/A	N/A	PID=.5 ppm α=0 ppm BΓ=50 cpm
9.5 10.0	115269	05/05/93 14:00	N/A	6	SHELBY TUBE, VERY STIFF, (2.5Y, 5/4) LIGHT OLIVE BROWN, SILTY CLAY, TRACE FINE SAND, LOW PLASTICITY, MOIST	CL	3.5	PID=.5 ppm α=0 ppm BΓ=50 cpm
10.0 10.5	115270	05/05/93 14:15	4	6	VERY STIFF, (2.5Y, 5/4) LIGHT OLIVE BROWN, SILTY FINE SAND, LOW PLASTICITY, MOIST	ML	2.5	PID=1 ppm α=0 ppm BΓ=50-70 cpm
10.5 11.0	115270	05/05/93 14:15	10	6	SAA	ML	2.5	PID=1 ppm α=0 ppm BΓ=50-70 cpm
11.0 11.5	115271	05/05/93 14:15	18	6	SAA	ML	2.5	PID=1 ppm α=0 ppm BΓ=50-70 cpm
11.5 12.0	115272	05/05/93 14:15	29	6	VERY STIFF, (2.5Y, 5/4) LIGHT OLIVE BROWN, (2.5Y, 5/1) GRAY MOTTLES, SILTY FINE SAND, LOW PLASTICITY, MOIST	ML	2	PID=1 ppm α=0 ppm BΓ=50-70 cpm
12.0 12.5	115273	05/05/93 14:30	4	6	SAA	ML	2	
12.5 13.0	115274	05/05/93 14:30	10	6	SAA	ML	2	PID=.7 ppm α=0 ppm BΓ=50 cpm
13.0 13.5	115275	05/05/93 14:30	18	6	SAA	ML	2	PID=.7 ppm α=0 ppm BΓ=50 cpm
13.5 14.0	115276	05/05/93 14:30	18	6	VERY STIFF, (2.5Y5/1) GRAY, SILTY FINE SAND, LOW PLASTICITY, MOIST, ROCK FRAGMENTS	ML	2	PID=.7 ppm α=0 ppm BΓ=50 cpm
14.0 14.5	115277	05/05/93 14:40	10	6	DENSE, (2.5Y5/1) GRAY, POORLY GRADED SAND, LOW PLASTICITY, MOIST	SP	N/A	PID=.9 ppm α=0 ppm BΓ=20 cpm
14.5 15.0	115278	05/05/93 14:40	14	6	SAA	SP	N/A	PID=.9 ppm α=0 ppm BΓ=20 cpm

NOTES:
BACKGROUND READINGS: BETA/GAMMA = 50-70 CPM, ALPHA = 0 CPM, MT = .5 PPM

Boring Contractor: PENNSYLVANIA DRILLING CO.
Driller: M WATRAL, B DEILEY
Drilling Equipment: ACKER SOIL SENTRY

SAA = Same as Above
PID = Photoionization Detector
N/A = Not Applicable

000561

PROJECT NUMBER: 20.03.05	PROJECT NAME: CRU2 RI PHASE II FIELD INVESTIGATION	
BORING NUMBER: 1950	COORDINATES: NORTH 482202.10 EAST 1379549.67	DATE:05-MAY-93
GROUND ELEVATION: 582.39	GWL: Depth Date/Time	DATE STARTED: 05-MAY-93
ENGINEER/GEOLOGIST: J REGAN	Depth Date/Time	DATE COMPLETE: 06-MAY-93
DRILLING METHOD: HOLLOW STEM AUGER		

DEPTH	SAMPLE / DATE / TIME	BLOWS ON SAMPLE	RECOVERY INCHES		USCS SYMBOL	TSF	REMARKS
15.0 15.5	115279 05/05/93 14:40	18	6	DENSE, (2.5Y5/1) GRAY, POORLY GRADED SAND, LOW PLASTICITY, WET, SOME GRAVELS	SP	N/A	PID=.9 ppm α=0 ppm βΓ=20 cpm
15.5 16.0	115280 05/05/93 14:40	20	4	SAA	SP	N/A	PID=.9 ppm α=0 ppm βΓ=20 cpm
16.0 16.5	115281 05/05/93 14:50	8	6	STIFF, (2.5Y5/1) GRAY, SILTY CLAY, LOW PLASTICITY, MOIST	CL	1.5	PID=1 ppm α=0 ppm βΓ=50 cpm
16.5 17.0	115282 05/05/93 14:50	10	6	VERY STIFF, (2.5Y5/1) GRAY, SILTY CLAY, LOW PLASTICITY, MOIST	CL	2	PID=1 ppm α=0 ppm βΓ=50 cpm
17.0 17.5	115283 05/05/93 14:50	12	6	STIFF, (2.5Y5/1) GRAY, SILTY CLAY, LOW PLASTICITY, MOIST	CL	1.75	PID=1 ppm α=0 ppm βΓ=50 cpm
17.5 18.0	115284 05/05/93 14:50	14	6	VERY STIFF, (2.5Y5/1) GRAY, SILTY CLAY, LOW PLASTICITY, MOIST	CL	2	PID=1 ppm α=0 ppm βΓ=50 cpm
18.0 18.5	115285 05/05/93 15:00	6	6	VERY STIFF, (2.5Y, 5/1) GRAY, SILTY CLAY, SOME GRAVELS, LOW PLASTICITY, MOIST	CL	2.5	PID=1 ppm α=0 ppm βΓ=100 cpm
18.5 19.0	115286 05/05/93 15:00	8	6	SAA	CL	2	PID=1 ppm α=0 ppm βΓ=100 cpm
19.0 19.5	115287 05/05/93 15:00	12	6	SAA	CL	2	PID=1 ppm α=0 ppm βΓ=100 cpm
19.5 20.0	115288 05/05/93 15:00	14	6	SAA	CL	2.5	PID=1 ppm α=0 ppm βΓ=100 cpm
20.0	05/05/93 00:00	N/A	N/A	BOTTOM OF BORING AT 20 FEET	N/A	N/A	

NOTES:
BACKGROUND READINGS: BETA/GAMMA = 50-70 CPM, ALPHA = 0 CPM, MT = .5 PPM

Boring Contractor: PENNSYLVANIA DRILLING CO.
Driller: M WATRAL, B DEILEY
Drilling Equipment: ACKER SOIL SENTRY

SAA = Same as Above
PID = Photoionization Detector
N/A = Not Applicable

PROJECT NUMBER: 20.03.05	PROJECT NAME: CRU2 RI PHASE II FIELD INVESTIGATION	
BORING NUMBER: 1952	COORDINATES: NORTH 482057.73 EAST 1379766.45	DATE:30-APR-93
GROUND ELEVATION: 588.01	GWL: Depth Date/Time	DATE STARTED: 30-APR-93
ENGINEER/GEOLOGIST: J REAGAN	Depth Date/Time	DATE COMPLETE: 30-APR-93
DRILLING METHOD: HOLLOW STEM AUGER		

DEPTH	SAMPLE	DATE TIME	BLOWS ON SAMPLE	RECOVERY INCHES		USCS SYMBOL	TSF	REMARKS
.5	111652	04/30/93 14:30	4	6	STIFF, (10YR3/3) SILTY FINE SAND, LOW PLASTICITY, MOIST	ML	2	PID=0 ppm α=0 ppm βΓ=60 cpm
.5 1.0	111653	04/30/93 14:30	8	6	VERY STIFF, (2.5Y4/3) OLIVE BROWN, (2.5Y5/4) MOTTLES, SILTY CLAY, SLIGHTLY PLASTIC, MOIST	CL	2	PID=0 ppm α=0 ppm βΓ=60 cpm
1.0 1.5	111654	04/30/93 14:30	11	6	SAA	CL	2	PID=0 ppm α=0 ppm βΓ=60 cpm
1.5 2.0	111655	04/30/93 14:30	11	6	SAA	CL	2	PID=0 ppm α=0 ppm βΓ=60 cpm
2.0 2.5	111656	04/30/93 14:35	5	6	SAA	CL	2	PID=0 ppm α=0 ppm βΓ=80 cpm
2.5 3.0	111657	04/30/93 14:35	6	6	SAA	CL	2	PID=0 ppm α=0 ppm βΓ=80 cpm
3.0 3.5		04/30/93 00:00	6	0	NO RECOVERY	N/A	N/A	
3.5 4.0		04/30/93 00:00	9	0	NO RECOVERY	N/A	N/A	
4.0 6.0	111658	04/30/93 14:50	N/A	N/A	SHELBY TUBE	N/A	N/A	
6.0 6.5	111659	04/30/93 15:00	7	6	VERY STIFF, (2.5Y5/4) SILTY CLAY, SLIGHTLY PLASTIC, MOIST	CL	2	PID=0 ppm α=0 ppm βΓ=80 cpm
6.5 7.0	111660	04/30/93 15:00	10	6	STIFF, (2.5Y5/4), SILITY CLAY, LOW PLASTICITY, MOIST	CL	1.5	PID=0 ppm α=0 ppm βΓ=80 cpm
7.0 7.5	111676	05/05/93 15:00	11	6	VERY STIFF, (2.5Y2/1) BLACK, SILTY CLAY, LOW PLASTICITY, MOIST	CL	2	PID=0 ppm α=0 ppm βΓ=80 cpm
7.5 8.0	111660	04/30/93 15:00	19	6	VERY STIFF, (2.5Y2/1) BLACK, SILTY CLAY, LOW PLASTICITY, MOIST	CL	2	PID=0 ppm α=0 ppm βΓ=80 cpm

NOTES:
BACKGROUND READINGS: BETA/GAMMA = 60-80 CPM, ALPHA = 0 CPM, MT = 0 PPM

Boring Contractor: PENNSYLVANIA DRILLING
Driller: MARTY WATRAL, BOB DEILEY

SAA = Same as Above
PID = Photoionization Detector
N/A = Not Applicable

000563

PROJECT NUMBER: 20.03.05	PROJECT NAME: CRU2 RI PHASE II FIELD INVESTIGATION	
BORING NUMBER: 1952	COORDINATES: NORTH 482057.73 EAST 1379766.45	DATE:30-APR-93
GROUND ELEVATION: 588.01	GWL: Depth Date/Time	DATE STARTED: 30-APR-93
ENGINEER/GEOLOGIST: J REAGAN	Depth Date/Time	DATE COMPLETE: 30-APR-93
DRILLING METHOD: HOLLOW STEM AUGER		

DEPTH	SAMPLE	DATE TIME	BLOWS ON	SAMPLE	RECOVERY INCHES		USCS SYMBOL	TSF	REMARKS
8.0 8.5	111661	04/30/93 15:10	4		6	VERY STIFF, (2.5Y5/4), SILTY CLAY, LOW PLASTICITY, MOIST	CL	2	PID=0 ppm α=0 ppm BΓ=60 cpm
8.5 9.0	111662	04/30/93 15:10	6		6	VERY STIFF, (2.5Y2/1) BLACK, SILTY CLAY, LOW PLASTICITY, MOIST	CL	2	PID=0 ppm α=0 ppm BΓ=60 cpm
9.0 9.5	111663	04/30/93 15:10	8		6	VERY STIFF, (2.5Y5/4) SILTY CLAY, LOW PLASTICITY, MOIST	CL	2	PID=0 ppm α=0 ppm BΓ=60 cpm
9.5 10.0	111664	04/30/93 15:10	14		6	SAA	CL	2	PID=0 ppm α=0 ppm BΓ=60 cpm
10.0 10.5	111665	04/30/93 15:15	5		6	VERY STIFF, (2.5Y2/1) BLACK, SILTY CLAY, LOW PLASTICITY, MOIST	CL	2.5	PID=0 ppm α=0 ppm BΓ=60 cpm
10.5 11.0	111666	04/30/93 15:15	9		6	VERY STIFF, (2.5Y5/4) SILTY CLAY, MEDIUM PLASTICITY, MOIST	CL	3	PID=0 ppm α=0 ppm BΓ=60 cpm
11.0 11.5	111667	04/30/93 15:15	11		6	SAA	CL	2.5	PID=0 ppm α=0 ppm BΓ=60 cpm
11.5 12.0	111668	04/30/93 15:15	16		6	VERY STIFF, (2.5Y5/4), SILTY CLAY, TRACE SAND, LOW PLASTICITY, WET	CL	2.5	PID=0 ppm α=0 ppm BΓ=60 cpm
12.0 14.0	111669	04/30/93 15:30	N/A		N/A	SHELBY TUBE	N/A	N/A	
14.0 14.5	111670	04/30/93 15:45	5		6	VERY STIFF, (2.5Y5/4), SILTY CLAY, TRACE SAND, LOW PLASTICITY, MOIST	CL	3	PID=0 ppm α=0 ppm BΓ=100 cpm
14.5 15.0	111670	04/30/93 15:45	12		6	SAA	CL	3	PID=0 ppm α=0 ppm BΓ=100 cpm
15.0 15.5	111671	04/30/93 15:45	17		6	VERY STIFF, (2.5Y5/4), SILTY CLAY, TRACE SAND, LOW PLASTICITY, MOIST	CL	3	PID=0 ppm α=0 ppm BΓ=100 cpm
15.5 16.0	111677	04/30/93 15:45	20		6	SAA	CL	3	

NOTES:
BACKGROUND READINGS: BETA/GAMMA = 60-80 CPM, ALPHA = 0 CPM, MT = 0 PPM

Boring Contractor: PENNSYLVANIA DRILLING
Driller: MARTY WATRAL, BOB DEILEY

SAA = Same as Above
PID = Photoionization Detector
N/A = Not Applicable

PROJECT NUMBER: 20.03.05	PROJECT NAME: CRU2 RI PHASE II FIELD INVESTIGATION	
BORING NUMBER: 1952	COORDINATES: NORTH 482057.73 EAST 1379766.45	DATE:30-APR-93
GROUND ELEVATION: 588.01	GWL: Depth Date/Time	DATE STARTED: 30-APR-93
ENGINEER/GEOLOGIST: J REAGAN	Depth Date/Time	DATE COMPLETE: 30-APR-93
DRILLING METHOD: HOLLOW STEM AUGER		

DEPTH	SAMPLE	DATE TIME	BLOWS ON	SAMPLE	RECOVERY	INCHES		USCS SYMBOL	TSF	REMARKS
16.0 16.5	111672	04/30/93 16:00	5		6		VERY STIFF, (2.5Y5/4), (2.5Y6/1) MOTTLES, CLAY, MEDIUM PLASTICITY, MOIST, FEW GRAVELS	CL	3	PID=0 ppm α=0 ppm BΓ=40 cpm
16.5 17.0	111673	04/30/93 16:00	5		6		SAA	CL	2.5	PID=0 ppm α=0 ppm BΓ=40 cpm
17.0 17.5	111674	04/30/93 16:00	12		6		VERY STIFF, (2.5Y5/4), (2.5Y6/1) AND (10YR5/4) MOTTLES, CLAY, MEDIUM PLASTICITY, MOIST	CL	2.5	PID=0 ppm α=0 ppm BΓ=40 cpm
17.5 18.0		04/30/93 16:00	21		0		NO RECOVERY	N/A	N/A	
18.0 18.5	111675	05/01/93 08:40	16		6		VERY STIFF, (2.5Y5/1) GRAY, (2.5Y5/4) MOTTLES, SILTY CLAY, SLIGHTLY PLASTIC, MOIST	CL	2.5	PID=1.4 ppm α=0 ppm BΓ=80 cpm
18.5 19.0		04/30/93 00:00	36		N/A		NO RECOVERY	N/A	N/A	
19.0 19.5		04/30/93 00:00	50		N/A		NO RECOVERY	N/A	N/A	
19.5 20.0		04/30/93 00:00	50		N/A		NO RECOVERY	N/A	N/A	
20.0		04/30/93 00:00	N/A		N/A		BOTTOM OF BORING AT 20 FEET	N/A	N/A	

NOTES:
BACKGROUND READINGS: BETA/GAMMA = 60-80 CPM, ALPHA = 0 CPM, MT = 0 PPM

Boring Contractor: PENNSYLVANIA DRILLING
Driller: MARTY WATRAL, BOB DEILEY

SAA = Same as Above
PID = Photoionization Detector
N/A = Not Applicable

000565

02/02/94 13:57

PROJECT NUMBER: 20.03.05	PROJECT NAME: CRU2 RI PHASE II FIELD INVESTIGATION	
BORING NUMBER: 1982	COORDINATES: NORTH 482223.30 EAST 1379595.20	DATE:06-MAY-93
GROUND ELEVATION: 584.5	GWL: Depth Date/Time	DATE STARTED: 06-MAY-93
ENGINEER/GEOLOGIST: A COMO	Depth Date/Time	DATE COMPLETE: 06-MAY-93
DRILLING METHOD: HOLLOW STEM AUGER W/CME SAMPLER		

DEPTH	SAMPLE	DATE TIME	BLOWS ON	SAMPLE	RECOVERY	INCHES		USCS	SYMBOL	TSF	REMARKS
2.5	111484 111485 111486	05/06/93 08:50	N/A		30		VERY STIFF, (2.5Y 5/3) LIGHT OLIVE BROWN, AND (10YR 5/6) YELLOWISH BROWN, SILTY CLAY, SLIGHT PLASTICITY, SOME GRAVEL, DRY	CL		3.75	PID=0.7 ppm BΓ=50-70 cpm
2.5 5.0		05/06/93 08:50	N/A		30		SAA	CL		2.5	PID=0.7 ppm BΓ=50-70 cpm
5.0 7.5		05/06/93 09:10	N/A		30		HARD (5Y 6/1) GRAY AND (2.5Y 5/6) LIGHT OLIVE BROWN SILTY CLAY, NO PLASTICITY, SOME SMALL GRAVEL, DRY	CL		4.5	PID=0.7 ppm BΓ=50-70 cpm
7.5 10.0	111487	05/06/93 09:10	N/A		30		VERY STIFF, (2.5Y 5/4) LIGHT OLIVE BROWN, SILTY CLAY, NO PLASTICITY, DRY, IRON STAINING ON CLEAVAGE SURFACES	CL		3.75	PID=0.7 ppm BΓ=50-70 cpm
10.0 12.0	111488	05/06/93 09:20	N/A		N/A		PUSH SHELBY TUBE FROM 10.0' TO 12.0' @ 09:20 SAMPLE #111488	N/A		N/A	
12.0		05/06/93 00:00	N/A		N/A		BOTTOM OF BORING AT 12 FEET	N/A		N/A	

NOTES:
SAMPLED TO 10.0' WITH CME SAMPLER. THEN PUSHED SHELBY TUBE FROM 10.0' TO 12.0'.
BACKGROUND READINGS: MT = .7 PPM, BETA/GAMMA = 50-70 CPM

Boring Contractor: PENNSYLVANIA DRILLING CO
Driller: DON SMITH, SAM SMITH

SAA = Same as Above
PID = Photoionization Detector
N/A = Not Applicable

PROJECT NUMBER: 20.03.05	PROJECT NAME: CRU2 RI PHASE II FIELD INVESTIGATION	
BORING NUMBER: 1983	COORDINATES: NORTH 482173.32 EAST 1379593.72	DATE:03-MAY-93
GROUND ELEVATION: 582.7	GWL: Depth Date/Time	DATE STARTED: 03-MAY-93
ENGINEER/GEOLOGIST: A COMO	Depth Date/Time	DATE COMPLETE: 05-MAY-93
DRILLING METHOD: HOLLOW STEM AUGER W/CME SAMPLER		

DEPTH	SAMPLE	DATE TIME	BLOWS ON SAMPLE	RECOVERY INCHES		USCS SYMBOL	TSF	REMARKS
1.5	111475	05/03/93 14:00	N/A	18	STIFF, (2.5Y 4/4) OLIVE BROWN, SILTY CLAY, MEDIUM PLASTICITY, SOME SMALL ANGULAR TO ROUNDED GRAVEL, MOIST	CL	1.5	PID=0.6 ppm BΓ=60-70 cpm
1.5 2.5	111476	05/03/93 14:00	N/A	12	VERY STIFF, (2.5Y 5/4) LIGHT OLIVE BROWN, SILTY CLAY, SLIGHT PLASTICITY, SOME GRAVEL, SOME BLACK CLAY SPOTS, MOIST	CL	3.25	PID=0.6 ppm BΓ=60-70 cpm
2.5 5.0	111477 111478	05/03/93 14:00	N/A	30	VERY STIFF, (2.5Y 5/6) LIGHT OLIVE BROWN, AND (5Y 5/1) GRAY SILTY CLAY, SOME GRAVEL, MEDIUM PLASTICITY, DRY	CL	3.0	PID=0.6 ppm BΓ=70-80 cpm
5.0 6.0		05/05/93 09:15	N/A	12	(2.5Y 5/6) LIGHT OLIVE BROWN, CLAYEY SILT, SOME SMALL BLACK SPECS, DRY	ML	N/A	PID=0 ppm BΓ=70-80 cpm
6.0 7.5		05/05/93 09:15	N/A	18	VERY STIFF, (5Y 5/1) GRAY SILTY CLAY, SLIGHT PLASTICITY, SOME VF SAND, SOME GRAVEL, DRY	CL	2.25	PID=0 ppm BΓ=70-80 cpm
7.5 8.5		05/05/93 09:15	N/A	12	STIFF, (5Y 5/1) GRAY SILTY CLAY, SLIGHT PLASTICITY, SOME GRAVEL, DRY	CL	1.5	PID=0 ppm BΓ=70-80 cpm
8.5 9.0		05/05/93 09:15	N/A	6	SAA WITH SOME (5Y 5/4) OLIVE CLAY, MOIST	CL	1.5	PID=0 ppm BΓ=70-80 cpm
9.0 10.0		05/05/93 09:15	N/A	12	STIFF (5Y 4/1) DARK GRAY SILTY CLAY, LOW PLASTICITY, SOME GRAVEL, SOME GREENISH SILTY CLAY, DRY	CL	1.5	PID=0 ppm BΓ=70-80 cpm
10.0 11.5		05/05/93 09:50	N/A	30	SAA	CL	1.5	PID=0 ppm BΓ=70-80 cpm
11.5 12.5		05/05/93 09:50	N/A	30	(2.5Y 5/4) OLIVE CLAYEY SILT WITH (10YR 4/6) DARK YELLOWISH BROWN, DISCOLORATION ALONG CLEAVAGE PLANES, SOME BLACK SPECS, SOME GRAVEL, NO PLASTICITY, DRY	ML	N/A	PID=0 ppm BΓ=70-80 cpm
12.5 14.0		05/05/93 09:50	N/A	30	SAA	ML	N/A	PID=0 ppm BΓ=70-80 cpm
14.0 15.0		05/05/93 09:50	N/A	30	VERY STIFF, (2.5Y 5/6) LIGHT OLIVE BROWN, CLAYEY SILT AND (5Y 5/1) GRAY CLAY, SOME SMALL GRAVEL, DRY, IRON STAINING ALONG CLEAVAGE PLANES	CL	3.25	PID=0 ppm BΓ=70-80 cpm

NOTES:
SOIL BORING USING CME SAMPLER.
05/03/93 BACKGROUND READINGS: MT = .6 PPM, BETA/GAMMA = 60-70 CPM;
05/05/93 BACKGROUND READINGS: MT = 0 PPM, BETA/GAMMA = 70-80 CPM

Boring Contractor: PENNSYLVANIA DRILLING CO
Driller: DON SMITH

SAA = Same as Above
PID = Photoionization Detector
N/A = Not Applicable

PROJECT NUMBER: 20.03.05	PROJECT NAME: CRU2 RI PHASE II FIELD INVESTIGATION	
BORING NUMBER: 1983	COORDINATES: NORTH 482173.32 EAST 1379593.72	DATE:03-MAY-93
GROUND ELEVATION: 582.7	GWL: Depth Date/Time	DATE STARTED: 03-MAY-93
ENGINEER/GEOLOGIST: A COMO	Depth Date/Time	DATE COMPLETE: 05-MAY-93
DRILLING METHOD: HOLLOW STEM AUGER W/CME SAMPLER		

DEPTH	SAMPLE	DATE TIME	BLOWS ON	SAMPLE	RECOVERY	INCHES		USCS	SYMBOL	TSF	REMARKS
15.0 17.5		05/05/93 10:15	N/A		30		VERY STIFF, (2.5Y 5/6) LIGHT OLIVE BROWN, AND (5Y 5/1) GRAY SILTY CLAY, SLIGHT PLASTICITY, SOME SMALL GRAVEL, DRY	CL		3.5	PID=0 ppm BΓ=70-80 cpm
17.5 19.0	111480 111481 111482	05/05/93 10:15	N/A		18		SAA	CL		3.5	PID=0 ppm BΓ=70-80 cpm
19.0 20.0	111480 111481 111482	05/05/93 10:15	N/A		12		(2.5Y 5/6) LIGHT OLIVE BROWN, CLAYEY SILT, NO PLASTICITY, DRY	ML		N/A	PID=0 ppm BΓ=70-80 cpm
20.0		05/05/93 00:00	N/A		N/A		BOTTOM OF BORING AT 20 FEET	N/A		N/A	

NOTES:
SOIL BORING USING CME SAMPLER.
05/03/93 BACKGROUND READINGS: MT = .6 PPM, BETA/GAMMA = 60-70 CPM;
05/05/93 BACKGROUND READINGS: MT = 0 PPM, BETA/GAMMA = 70-80 CPM

Boring Contractor: PENNSYLVANIA DRILLING CO
Driller: DON SMITH

SAA = Same as Above
PID = Photoionization Detector
N/A = Not Applicable

PROJECT NUMBER: 20.03.05	PROJECT NAME: CRU2 RI PHASE II FIELD INVESTIGATION	
BORING NUMBER: 1984	COORDINATES: NORTH 482096.15 EAST 1379666.47	DATE:01-MAY-93
GROUND ELEVATION: 588	GWL: Depth Date/Time	DATE STARTED: 01-MAY-93
ENGINEER/GEOLOGIST: A COMO	Depth Date/Time	DATE COMPLETE: 01-MAY-93
DRILLING METHOD: HOLLOW STEM AUGER W/CME SAMPLER		

DEPTH	SAMPLE	DATE TIME	BLOWS ON SAMPLE	RECOVERY INCHES		USCS SYMBOL	TSF	REMARKS
2.5	111463 111464 111465	05/01/93 11:00	N/A	30	VERY STIFF, (2.5Y 4/4) OLIVE BROWN AND (2.5Y 5/2) SILTY CLAY, SLIGHT PLASTICITY, SOME SMALL GRAVEL, DRY	CL	2.25	PID=1.5 ppm BΓ=100-110 cpm
2.5 5.0	111466	05/01/93 11:00	N/A	30	(2.5'-3.0') OBSTRUCTION DRILLED THROUGH WITH AUGERS, GRAY (5Y, 5/1) SILTY SAND, WELL GRADED WITH (2.5Y, 4/4) OLIVE BROWN SILTY CLAY, SOME SMALL GRAVEL, DRY	SM	N/A	PID=1.6 ppm BΓ=100-110 cpm
5.0 7.5	111469	05/01/93 14:00	N/A	30	(5Y 5/1) GRAY SILTY SAND, WELL GRADED, SOME SMALL GRAVEL, SOME (5Y 4/4) OLIVE SILTY CLAY, LOW PLASTICITY, DRY	SM	N/A	PID=1.1 ppm BΓ=100-110 cpm
7.5 9.0	111467	05/01/93 14:00	N/A	30	SAA	SM	N/A	PID=1.1 ppm BΓ=100-110 cpm
9.0 10.0	111471 111472	05/01/93 14:00	N/A	30	VERY STIFF, (5Y 3/1) VERY DARK GRAY, SILTY CLAY, LOW PLASTICITY, SOME (5Y 4/1) DARK GRAY SILTY CLAY, DRY	CL	2.25	PID=1.1 ppm BΓ=100-110 cpm
10.0 12.5	111470	05/01/93 14:30	N/A	30	VERY STIFF, (2.5Y 5/6) LIGHT OLIVE BROWN AND SILTY, (2.5Y 5/0) CLAY, SLIGHT PLASTICITY, DRY	CL	2.5	PID=1.1 ppm BΓ=100-110 cpm
12.5 15.0	111468	05/01/93 14:30	N/A	30	VERY STIFF, (2.5Y 5/6) LIGHT OLIVE BROWN, SILTY CLAY, SOME (2.5Y 6/0) SILTY CLAY, SLIGHT PLASTICITY, DRY	CL	2.75	PID=1.1 ppm BΓ=100-110 cpm
15.0		05/01/93 00:00	N/A	N/A	BOTTOM OF BORING AT 15 FEET	N/A	N/A	

NOTES:
SOIL BORING USING HOLLOW STEM AUGER W/CME SAMPLER.
BACKGROUND READINGS: MT = 1.1 PPM, BETA/GAMMA = 100-110 CPM

Boring Contractor: PENNSYLVANIA DRILLING CO
Driller: CHRIS COULTER, BOB JOHNSON

SAA = Same as Above
PID = Photoionization Detector
N/A = Not Applicable

PROJECT NUMBER: 20.03.05	PROJECT NAME: CRU2 RI PHASE II FIELD INVESTIGATION	
BORING NUMBER: 1985	COORDINATES: NORTH 482092.47 EAST 1379724.66	DATE:26-APR-93
GROUND ELEVATION: 588.1	GWL: Depth Date/Time	DATE STARTED: 26-APR-93
ENGINEER/GEOLOGIST: A COMO	Depth Date/Time	DATE COMPLETE: 27-APR-93
DRILLING METHOD: BUCKET AUGER AND CME SAMPLER		

DEPTH	SAMPLE	DATE TIME	BLOWS ON SAMPLE	RECOVERY INCHES		USCS SYMBOL	TSF	REMARKS
1.0	111440	04/26/93 13:40	N/A	12	(2.5Y 4/4) OLIVE BROWN, SILTY CLAY, LOW PLASTICITY, SOME GRAVEL, MOIST	CL	N/A	PID=.6 ppm BΓ=80-100 cpm
1.0 2.0	111440	04/26/93 13:40	N/A	12	SAA, DRY	CL	N/A	PID=.6 ppm BΓ=80-100 cpm
2.0 3.0	111440	04/26/93 14:00	N/A	12	(2.5Y, 5/3) LIGHT OLIVE BROWN, SILTY CLAY, LOW PLASTICITY, SOME GRAVEL, DRY	CL	N/A	PID=1.1 ppm BΓ=80-100 cpm
3.0 4.0	111441	04/26/93 14:00	N/A	12	SAA, DRY	CL	N/A	PID=1.1 ppm BΓ=80-100 cpm
4.0 5.0	111442	04/26/93 15:30	N/A	12	(2.5Y, 4/4) LIGHT OLIVE BROWN, SILTY CLAY, LOW PLASTICITY, SOME GRAVEL, WET	CL	N/A	PID=1.1 ppm BΓ=40-50 cpm
5.0 6.0	111442	04/26/93 15:30	N/A	12	SAA, SOME SAND, WELL GRADED CAN SEE WATER FLOWING INTO BOREHOLE FROM SIDEWALL TO 4.8'	CL	N/A	PID=1.1 ppm BΓ=40-50 cpm
6.0 7.0	111443	04/26/93 16:35	N/A	12	(2.5Y, 4/2)DARK GRAYISH BROWN, SILTY CLAY, MEDIUM PLASTICITY, SOME GRAVEL, SOME SAND, WELL GRADED, MOIST, NAIL	CL	N/A	PID=1.1 ppm BΓ=40-50 cpm
7.0 8.0	111443	04/26/93 16:35	N/A	12	SAA	CL	N/A	PID=1.1 ppm BΓ=40-50 cpm
8.0 9.0	111444	04/27/93 14:30	N/A	12	(2.5Y, 5/4) LIGHT OLIVE BROWN, CLAYEY SILT, LOW PLASTICITY, SOME GRAVEL, SOME SAND, WELL GRADED, MOIST	ML	N/A	PID=.8 ppm BΓ=40-50 cpm
9.0 10.0	111444	04/27/93 14:30	N/A	12	SAA	ML	N/A	PID=.8 ppm BΓ=40-50 cpm
10.0 11.0	111445	04/27/93 14:30	N/A	12	STIFF (2.5Y, 4/2) DARK GRAYISH BROWN, SILTY CLAY, MEDIUM PLASTICITY, SOME GRAVEL, MOIST	CL	1	PID=.8 ppm BΓ=40-50 cpm
11.0 12.0	111445	04/27/93 14:30	N/A	12	VERY STIFF (2.5Y, 2/0) BLACK AND (2.5Y, 4/0) DARK GRAY, SILTY CLAY, LOW PLASTICITY, DRY	CL	2.5	PID=.8 ppm BΓ=40-50 cpm
12.0 12.5	111446	04/27/93 14:30	N/A	6	SAA, VERY STIFF, DRY	CL	2.75	PID=.8 ppm BΓ=40-50 cpm

NOTES:
USED BUCKET AUGER FRIM 0.0' to 8.0'. THEN USED CME SAMPLER FROM 8.0 TO 17.0'. GROUTED NATIVE MATERIAL THEN BACKFILLED BORING WITH SOIL CUTTINGS.
BACKGROUND READINGS: MT = .6 PPM, BETA/GAMMA = 40-60 CPM

Boring Contractor: PENNSYLVAINA DRILLING
Driller: DON SMITH
Drilling Equipment: MOBILE B-80

SAA = Same as Above
PID = Photoionization Detector
N/A = Not Applicable

PROJECT NUMBER: 20.03.05	PROJECT NAME: CRU2 RI PHASE II FIELD INVESTIGATION	
BORING NUMBER: 1985	COORDINATES: NORTH 482092.47 EAST 1379724.66	DATE:26-APR-93
GROUND ELEVATION: 588.1	GWL: Depth Date/Time	DATE STARTED: 26-APR-93
ENGINEER/GEOLOGIST: A COMO	Depth Date/Time	DATE COMPLETE: 27-APR-93
DRILLING METHOD: BUCKET AUGER AND CME SAMPLER		

DEPTH	SAMPLE	DATE TIME	BLOWS ON SAMPLE	RECOVERY INCHES		USCS SYMBOL	TSF	REMARKS
12.5 13.0	111446	04/27/93 14:30	N/A	6	VERY STIFF (5Y, 5/1) GRAY CLAY, SOME (2.5Y, 5/6) LIGHT OLIVE BROWN, SILTY CLAY, LOW PLASTICITY, DRY	CL	2.75	PID=.8 ppm BΓ=40-50 cpm
13.0 14.0	111447	04/27/93 16:30	N/A	12	VERY STIFF (2.5Y, 5/4) LIGHT OLIVE BROWN, CLAYEY SILT, SOME (2.5Y, 4/0) DARK GRAY, SILTY CLAY, SOME GRAVEL, LOW PLASTICITY, DRY	ML	3	PID=.8 ppm BΓ=40-50 cpm
14.0 15.0	111447	04/27/93 16:30	N/A	12	SAA, DRY	ML	3	PID=.8 ppm BΓ=40-50 cpm
15.0 16.0	111448	04/27/93 16:30	N/A	12	VERY STIFF (2.5Y, 5/4) LIGHT OLIVE BROWN, CLAYEY SILT SOME (7.5Y, 5/6) STRONG BROWN, SILTY CLAY, SLIGHT PLASTICITY, SOME SMALL GRAVEL, DRY, IRON STAINING ON CLEAVAGE PLANES	ML	3.25	PID=.8 ppm BΓ=40-50 cpm
16.0 17.0	111448	04/27/93 16:30	N/A	12	SAA, DRY	ML	3.25	PID=.8 ppm BΓ=40-50 cpm
17.0		04/27/93 00:00	N/A	N/A	BOTTOM OF BORING AT 17 FEET	N/A	N/A	

NOTES:
USED BUCKET AUGER FRIM 0.0' to 8.0'. THEN USED CME SAMPLER FROM 8.0 TO 17.0'. GROUTED NATIVE MATERIAL THEN BACKFILLED BORING WITH SOIL CUTTINGS.
BACKGROUND READINGS: MT = .6 PPM, BETA/GAMMA = 40-60 CPM

Boring Contractor: PENNSYLVAINA DRILLING
Driller: DON SMITH
Drilling Equipment: MOBILE B-80

SAA = Same as Above
PID = Photoionization Detector
N/A = Not Applicable

PROJECT NUMBER: 20.03.05	PROJECT NAME: CRU2 RI PHASE II FIELD INVESTIGATION	
BORING NUMBER: 1986	COORDINATES: NORTH 482114.80 EAST 1379724.53	DATE:28-APR-93
GROUND ELEVATION: 588.7	GWL: Depth Date/Time	DATE STARTED: 28-APR-93
ENGINEER/GEOLOGIST: A COMO	Depth Date/Time	DATE COMPLETE: 30-APR-93
DRILLING METHOD: HOLLOW STEM AUGER W/CME SAMPLER		

DEPTH	SAMPLE / DATE / TIME	BLOWS ON SAMPLE	RECOVERY INCHES		USCS SYMBOL	TSF	REMARKS
2.5	111451 04/28/93 14:30	N/A	18	VERY STIFF, (2.5Y,4/3) OLIVE BROWN, SILTY CLAY, LOW TO MEDIUM PLASTICITY, DRY, SOME (5Y,4/2) OLIVE GRAY, SILTY CLAY	CL	2.75	PID=.9 ppm BΓ=100-120 cpm
2.5 4.8	111450 111452 111454 04/28/93 14:30	N/A	18	HARD (2.5Y, 4/3) OLIVE, BROWN, SILTY, CLAY, LOW PLASTICITY, GRAVEL, DRY	CL	4	
4.8 5.0	111450 04/28/93 14:30	N/A		HARD (2.5Y, 4/0) DARK, GRAY TO (2.5Y, 2/0) BLACK, SILTY, CLAY, NO PLASTICITY, DRY	CL	4	PID=.9 ppm BΓ=10,000 cpm
5.0 7.5	111453 111455 04/28/93 15:15	N/A	30	VERY STIFF(5Y,4/2)OLIVE, GRAY, SILTY, CLAY, LOW PLASTICITY, SOME GRAVEL, SMALL AREAS OF BLACK MATERIAL, SOME(2.5Y,5/4) LIGHT,OLIVE,BROWN,SILTY, CLAY WITH SOME(2.5Y, 5/1)GRAY,SILTY,CLAY,DRY	CL	3	PID=1 ppm BΓ=150-170 cpm
7.5 9.0	111456 04/29/93 15:15	N/A	24	VERY STIFF (5Y, 4/2) OLIVE, GRAY, SILTY, CLAY, SOME SUBANGULAR TO ROUNDED GRAVEL, LOW PLASTICITY, DRY	CL	2.75	PID=1 ppm BΓ=150-170 cpm
9.0 10.0	111456 04/29/93 15:15	N/A	N/A	(5Y, 4/2) OLIVE, GRAY, SAND LENSE VERY STIFF (7.5YR, 2/0) BLACK, SILTY, CLAY, LOW PLASTICITY, DRY	N/A	N/A	PID=1 ppm BΓ=150-170 cpm
10.0 11.0	111457 04/30/93 09:30	N/A	30	VERY STIFF (5Y, 5/1) GRAY, CLAY WITH (2.5Y, 5/6) LIGHT, OLIVE, BROWN, SILTY, CLAY, LOW PLASTICITY, DRY	CL	3	PID=.6 ppm BΓ=80-90 cpm
11.0 12.5	111457 04/30/93 09:30	N/A	N/A	VERY STIFF (2.5Y, 6/0) GRAY AND (2.5Y, 5/6) LIGHT, OLIVE, BROWN, SILTY, CLAY, WITH SOME (2.5Y, 2/0) BLACK, CLAY, LOW PLASTICITY, DRY	N/A	N/A	PID=.6 ppm BΓ=80-90 cpm
12.5 15.0	111456 111458 111459 115417 04/30/93 09:30	N/A	30	VERY STIFF (2.5Y, 5/6) LIGHT, OLIVE, BROWN, SILTY CLAY, LOW PLASTICITY, DRY; 13 FEET TO 13.5 FEET, (2.5Y, 5/6) LIGHT OLIVE BROWN, CLAYEY SAND, WELL GRADED, SOME GRAVEL, MOIST	CL	2.75	PID=.6 ppm BΓ=80-90 cpm

NOTES:
SOIL BORING USING HOLLOW STEM AUGER W/CME SAMPLER.
PUSHED SHELBY TUBE FROM 15.0' TO 17.0'.

Boring Contractor: PENNSYLVANIA DRILLING CO
Driller: DON SMITH

SAA = Same as Above
PID = Photoionization Detector
N/A = Not Applicable

PROJECT NUMBER: 20.03.05	PROJECT NAME: CRU2 RI PHASE II FIELD INVESTIGATION	
BORING NUMBER: 1987	COORDINATES: NORTH 482147.62 EAST 1379617.96	DATE:13-MAY-93
GROUND ELEVATION: 587.5	GWL: Depth Date/Time	DATE STARTED: 13-MAY-93
ENGINEER/GEOLOGIST: A COMO	Depth Date/Time	DATE COMPLETE: 13-MAY-93
DRILLING METHOD: HOLLOW STEM AUGER W/CME SAMPLER		

DEPTH	SAMPLE	DATE TIME	BLOWS ON SAMPLE	RECOVERY INCHES		USCS SYMBOL	TSF	REMARKS
2.5		05/13/93 10:00	N/A	30	HARD, (2.5Y,4/3) OLIVE BROWN, SILTY CLAY, NO PLASTICITY, SOME GRAVEL, DRY	CL	3	PID=1.4 ppm BΓ=40-80 cpm
3.0		05/13/93 10:00	N/A	6	SAA, DRY	CL	3	PID=1.4 ppm BΓ=40-80 cpm
5.0		05/13/93 10:00	N/A	24	HARD, (2.5Y,5/6) LIGHT OLIVE BROWN, SILTY CLAY, NO PLASTICITY, DRY, FEW PIECES OF GRAVEL, SOME (5Y,5/1) GRAY CLAY, DRY	CL	4	PID=1.4 ppm BΓ=40-80 cpm
7.5	115357 115358	05/13/93 10:15	N/A	30	HARD, (2.5Y,5/6) LIGHT OLIVE BROWN, SILTY CLAY, AND (5Y,5/1) GRAY, SILTY CLAY, LOW PLASTICITY, SOME GRAVEL, DRY, PIECES OF GLASS AND BLACK TAR LIKE MATERIAL	CL	3	PID=1.4 ppm BΓ=40-80 cpm
10.0		05/13/93 10:15	N/A	30	FIRM, (5Y,5/2) OLIVE GRAY, SILTY CLAY, MEDIUM PLASTICITY, SOME GRAVEL, SOME (2.5Y,5/6) LIGHT OLIVE BROWN, SILTY CLAY, DRY	CL	1	PID=1.4 ppm BΓ=40-80 cpm
12.0		05/13/93 10:40	N/A	24	HARD, (5Y,5/1) GRAY, SILTY CLAY, LOW PLASTICITY, SOME (2.5Y,5/6), CLAYEY SILT, DRY	CL	2.25	PID=1.4 ppm BΓ=40-80 cpm
12.5		05/13/93 10:40	N/A	6	VERY HARD, (2.5Y,5/4) LIGHT OLIVE BROWN, CLAYEY SILTY, NO PLASTICITY, SOME SMALL (2.5Y,5/0) GRAY PEBBLES, DRY	ML	4.5	PID=1.4 ppm BΓ=40-80 cpm
15.0	115359	05/13/93 10:40	N/A	30	SAA, DRY, IRON STAINING EVIDENT ON CLEAVAGE PLANES	ML	4.5	PID=1.4 ppm BΓ=40-80 cpm
17.0	115361	05/13/93 11:00	N/A	N/A	SHELBY TUBE	N/A	N/A	
17.0		05/13/93 00:00	N/A	N/A	BOTTOM OF BORING AT 17 FEET	N/A	N/A	

NOTES:
SOIL BORING USING CME SAMPLER. PUSHED SHELBY TUBE FROM 15' TO 17'.
BACKGROUND READINGS: MT = 1.4 PPM, BETA/GAMMA = 40-80 CPM

Boring Contractor: PENNSYLVANIA DRILLING CO.
Driller: DON SMITH, SAM SMITH

SAA = Same as Above
PID = Photoionization Detector
N/A = Not Applicable

000573

PROJECT NUMBER: 20.03.05	PROJECT NAME: CRU2 RI PHASE II FIELD INVESTIGATION	
BORING NUMBER: 1988	COORDINATES: NORTH 482118.15 EAST 1379767.17	DATE:12-MAY-93
GROUND ELEVATION: 588.3	GWL: Depth Date/Time	DATE STARTED: 12-MAY-93
ENGINEER/GEOLOGIST: A COMO	Depth Date/Time	DATE COMPLETE: 12-MAY-93
DRILLING METHOD: HOLLOW STEM AUGER W/CME SAMPLER		

DEPTH	SAMPLE	DATE TIME	BLOWS ON SAMPLE	RECOVERY INCHES		USCS SYMBOL	TSF	REMARKS
2.5		05/12/93 10:00	N/A	30	VERY HARD, (2.5Y,4/2) DARK GRAYISH BROWN, SILTY CLAY, NO PLASTICITY, SOME GRAVEL, SOME (2.5Y,4/0) DARK GRAY, SILTY CLAY, DRY	CL	4.5	PID=1.6 ppm BΓ=80-100 cpm
2.5 5.0		05/12/93 10:00	N/A	24	FIRM, (5Y,4/1) DARK GRAY, TO (5Y,3/1) VERY DARK GRAY, SILTY CLAY, MEDIUM PLASTICITY, SOME GRAVEL, DRY	CL	1	PID=4.2 ppm BΓ=180-200 cpm
5.0 7.5		05/12/93 10:15	N/A	30	FIRM, (5Y,4/1) DARK GRAY, SILTY CLAY, LOW PLASTICITY, SOME SMALL GRAVEL, SOME (5Y,3/1) VERY DARK GRAY, SILTY CLAY, FEW PIECES OF ORGANIC MATERIAL, MOIST	CL	1.5	PID=1.6 ppm BΓ=80-100 cpm
7.5 10.0		05/12/93 10:15	N/A	24	HARD, (5Y,3/1) VERY DARK GRAY, CLAYEY SILT, SOME (5Y,5/2) OLIVE GRAY CLAY, SLIGHT PLASTICITY, FEW PIECES OF GRAVEL, DRY	CL	2.25	PID=1.6 ppm BΓ=80-100 cpm
10.0 12.5		05/12/93 10:30	N/A	30	HARD, (5Y,5/1) GRAY, CLAY, SOME (10YR,5/6) YELLOW BROWN, SILTY CLAY, MEDIUM PLASTICITY, DRY	CL	3	PID=1.6 ppm BΓ=80-100 cpm
12.5 15.0		05/12/93 10:30	N/A	30	HARD, (10YR,5/6) YELLOWISH BROWN, AND (2.5Y,5/4) LIGHT OLIVE BROWN, SILTY CLAY, SOME (5Y,5/1) GRAY, CLAY, LOW PLASTICITY, DRY	CL	3	PID=1.6 ppm BΓ=80-100 cpm
15.0 17.5		05/12/93 13:00	N/A	30	HARD, (2.5Y,5/4) LIGHT OLIVE BROWN, CLAYEY SILTY, SOME (5Y,5/1) GRAY, CLAY, NO PLASTICITY, SOME PIECES OF GRAVEL, DRY	ML	3	PID=1.6 ppm BΓ=80-100 cpm
17.5 19.0		05/12/93 13:00	N/A	18	SAA, DRY	ML	4.5	PID=1.6 ppm BΓ=80-100 cpm
19.0 20.0		05/12/93 13:00	N/A	12	VERY HARD, (5Y,5/1) GRAY, SILTY CLAY, NO PLASTICITY, DRY, IRON STAINING EVIDENT ON CLEAVAGE PLANES	CL	4.5	PID=1.6 ppm BΓ=80-100 cpm
20.0 22.0		05/12/93 13:15	N/A	N/A	@ 13:15 PUSHED SHELBY TUBE FROM 20' TO 22' *VERY HARD TO PUSH SHELBY TUBE	N/A	N/A	
22.0		05/12/93 00:00	N/A	N/A	BOTTOM OF BORING AT 22 FEET	N/A	N/A	

NOTES:
SOIL BORING USING CME SAMPLER TO 20.0'. PUSHED SHELBY TUBE FROM 20.0' TO 22.0'.
BACKGROUND READINGS: MT - 1.6 PPM, BETA/GAMMA = 80-100 CPM

Boring Contractor: PENNSYLVANIA DRILLING CO
Driller: DON SMITH, SAM SMITH

SAA = Same as Above
PID = Photoionization Detector
N/A = Not Applicable

PROJECT NUMBER: 20.03.05	PROJECT NAME: CRU2 RI PHASE II FIELD INVESTIGATION	
BORING NUMBER: 1989	COORDINATES: NORTH 482197.59 EAST 1379619.43	DATE:14-MAY-93
GROUND ELEVATION: 586.7	GWL: Depth Date/Time	DATE STARTED: 14-MAY-93
ENGINEER/GEOLOGIST: A COMO	Depth Date/Time	DATE COMPLETE: 14-MAY-93
DRILLING METHOD: HOLLOW STEM AUGER W/CME SAMPLER		

DEPTH	SAMPLE	DATE TIME	BLOWS ON SAMPLE	RECOVERY INCHES		USCS SYMBOL	TSF	REMARKS
2.5		05/14/93 09:45	N/A	30	FIRM, (2.5Y,4/4) OLIVE BROWN, SILTY CLAY, SLIGHT PLASTICITY, SOME GRAVEL, DRY, SOME PLASTIC	CL	1.5	PID=.4 ppm BΓ=40-80 cpm
2.5 4.0	115362	05/14/93 09:45	N/A	18	FIRM, (5Y,4/1) DARK GRAY, SILTY CLAY, MEDIUM PLASTICITY, SOME GRAVEL, DRY, GLASS, PLASTIC, PAPER	CL	1.25	PID=1.4 ppm BΓ=80-100 cpm
4.0 5.0	115362	05/14/93 09:45	N/A	12	FIRM, (2.5Y,5/4) LIGHT OLIVE BROWN, SILTY CLAY, SOME (5Y,4/1) DARK GRAY, SILTY CLAY, MEDIUM PLASTICITY, SOME GRAVEL, DRY	CL	2	PID=1.4 ppm BΓ=80-100 cpm
5.0 7.5		05/14/93 10:00	N/A	30	FIRM, (5Y,5/3) OLIVE, AND (5Y,5/1) GRAY, SILTY CLAY, SOME GRAVEL, MEDIUM PLASTICITY, DRY, PLASTIC, GLASS	CL	2	PID=.4 ppm BΓ=40-80 cpm
7.5 8.5	115364 115365	05/14/93 10:00	N/A	12	SAA, DRY	CL	2	PID=.4 ppm BΓ=40-80 cpm
8.5 10.0	115364 115365	05/14/93 10:00	N/A	18	HARD, (2.5Y,5/6) LIGHT OLIVE BROWN, CLAYEY SILT, WITH SOME (5Y,6/1) GRAY CLAY, NO PLASTICITY, DRY, SOME SMALL GRAVEL	ML	2.25	PID=.4 ppm BΓ=40-80 cpm
10.0 12.5	115368	05/14/93 10:30	N/A	30	AT 10:05 PUSHED SHELBY TUBE 10'-12', VERY HARD, (2.5Y, 5/6) LIGHT OLIVE BROWN, CLAYEY SILT, NO PLASTICITY, SOME (5Y, 6/1) GRAY, CLAY ALONG CLEAVAGE PLANES, DRY, SOME SMALL GRAY GRAVEL	ML	4.5	PID=.4 ppm BΓ=40-80 cpm
12.5 15.0	115363	05/14/93 10:30	N/A	2.5	SAA, DRY	ML	4.5	PID=.4 ppm BΓ=40-80 cpm
15.0 17.0	115369	05/04/93 13:15	N/A	N/A	SHELBY TUBE	N/A	N/A	
17.0		05/04/93 00:00	N/A	N/A	BOTTOM OF BORING AT 17 FEET	N/A	N/A	

NOTES:
BACKGROUND READINGS: MT = .4 PPM, BETA/GAMMA = 40-80 CPM.
1040 PUSHED SHELBY TUBE FROM 15' - 17'; NO RECOVERY

Boring Contractor: PENNSYLVANIA DRILLING CO
Driller: DON SMITH

SAA = Same as Above
PID = Photoionization Detector
N/A = Not Applicable

PROJECT NUMBER: 20.03.05	PROJECT NAME: CRU2 RI PHASE II FIELD INVESTIGATION	
BORING NUMBER: 1990	COORDINATES: NORTH 482165.44 EAST 1379660.29	DATE:10-MAY-93
GROUND ELEVATION: 589.3	GWL: Depth Date/Time	DATE STARTED: 10-MAY-93
ENGINEER/GEOLOGIST: A COMO	Depth Date/Time	DATE COMPLETE: 10-MAY-93
DRILLING METHOD: HOLLOW STEM AUGER W/CME SAMPLER		

DEPTH	SAMPLE	DATE TIME	BLOWS ON SAMPLE	RECOVERY INCHES		USCS SYMBOL	TSF	REMARKS
2.5	115327 115328	05/10/93 13:20	N/A	30	FIRM, (2.5Y,4/3) OLIVE BROWN, SILTY CLAY, LOW PLASTICITY, SOME GRAVEL, DRY	CL	1.5	PID=.6 ppm BΓ=80-100 cpm
2.5 3.0	115327 115328	05/10/93 13:20	N/A	6	SAA	CL	1.5	PID=.6 ppm BΓ=80-100 cpm
3.0 5.0	115324	05/10/93 13:30	N/A	N/A	@13:30 PUSHED SHELBY TUBE FROM 3' TO 5' AUGERED FROM 3' TO 5' THEN RESUMED SAMPLING W/CME SAMPLER, PIECE OF PLASTIC AT END OF SHELBY TUBE	N/A	N/A	PID=.6 ppm BΓ=80-100 cpm
5.0 6.0		05/10/93 13:50	N/A	12	FIRM, (2.5Y,4/3) OLIVE BROWN, SILTY CLAY, LOW PLASTICITY, SOME GRAVEL, DRY	CL	1.5	PID=.6 ppm BΓ=80-100 cpm
6.0 7.5	115329 115330 115367 115331	05/10/93 13:50	N/A	18	HARD, (5Y,5/1) GRAY TO (5Y,4/1) DARK GRAY, SILTY CLAY, LOW PLASTICITY, SOME GRAVEL, SOME BLACK FLYASH, GLASS, PLASTIC CUP LIDS, DRY	CL	2	PID=1.8 ppm BΓ=200 cpm
7.5 9.0	115329 115367 115331 115330	05/10/93 13:50	N/A	18	SAA, MOIST	CL	1.5	PID=.6 ppm BΓ=300 cpm
9.0 10.0	115332 115333	05/10/93 13:50	N/A	12	SAA, MOIST-NO WASTE MATERIAL	CL	1.5	PID=.6 ppm BΓ=80-100 cpm
10.0 12.5	115325 115334	05/10/93 15:00	N/A	30	SAA, DRY, @ 14:05 PUSH SHELBY TUBE FROM 10' TO 12' SAMPLE #115325, PIECES OF GLASS, PLASTIC, STYROFOAM	CL	1	PID=.6 ppm BΓ=80-100 cpm
12.5 15.0		05/10/93 15:00	N/A	30	VERY HARD, (2.5Y,5/6) LIGHT OLIVE BROWN, SILTY CLAY, SOME (5Y,6/1) GRAY CLAY, SLIGHT PLASTICITY, DRY	CL	4.5	PID=.6 ppm BΓ=80-100 cpm
15.0 17.5		05/10/93 15:30	N/A	30	HARD, (2.5Y,5/6) LIGHT OLIVE BROWN, CLAYEY SILT, WITH SOME (5Y,5/1) GRAY SILTY CLAY, LOW PLASTICITY, SOME GRAVEL, SOME WELL GRADED FINE SAND, DRY	ML	4	PID=.6 ppm BΓ=80-100 cpm

NOTES:
USED CME SAMPLER TO 20'PUSHED SHELBY TUBE FROM 20 TO 22 FT.
BACKGROUND READINGS: MT = .6 PPM, BETA/GAMMA = 80-100 CPM

Driller: DON SMITH SAM SMITH

SAA = Same as Above
PID = Photoionization Detector
N/A = Not Applicable

PROJECT NUMBER: 20.03.05	PROJECT NAME: CRU2 RI PHASE II FIELD INVESTIGATION	
BORING NUMBER: 1990	COORDINATES: 482165.44 EAST 1379660.29	DATE:10-MAY-93
GROUND ELEVATION: 589.3	GWL: Depth Date/Time	DATE STARTED: 10-MAY-93
ENGINEER/GEOLOGIST: A COMO	Depth Date/Time	DATE COMPLETE: 10-MAY-93
DRILLING METHOD: HOLLOW STEM AUGER W/CME SAMPLER		

DEPTH	SAMPLE	DATE TIME	BLOWS ON SAMPLE	RECOVERY INCHES		USCS SYMBOL	TSF	REMARKS
17.5 20.0	115335 115336 115337	05/10/93 15:30	N/A	30	SAA, IRON STAINING ALONG CLEAVAGE PLANES	ML	4	PID=.6 ppm BΓ=80-100 cpm
20.0 22.0	115326	05/10/93 15:40	N/A	N/A	@ 15:40 PUSHED SHELBY TUBE FROM 20' TO 22' SAMPLE #115326	N/A	N/A	
22.0		05/10/93 00:00	N/A	N/A	BOTTOM OF BORING AT 22 FEET	N/A	N/A	

NOTES:
USED CME SAMPLER TO 20'PUSHED SHELBY TUBE FROM 20 TO 22 FT.
BACKGROUND READINGS: MT = .6 PPM, BETA/GAMMA = 80-100 CPM

Driller: DON SMITH SAM SMITH

SAA = Same as Above
PID = Photoionization Detector
N/A = Not Applicable

PROJECT NUMBER: 20.03.05	PROJECT NAME: CRU2 RI PHASE II FIELD INVESTIGATION	
BORING NUMBER: 1991	COORDINATES: NORTH 482196.10 EAST 1379689.37	DATE:06-MAY-93
GROUND ELEVATION: 589.1	GWL: Depth Date/Time	DATE STARTED: 06-MAY-93
ENGINEER/GEOLOGIST: A COMO	Depth Date/Time	DATE COMPLETE: 06-MAY-93
DRILLING METHOD: HOLLOW STEM AUGER W/CME SAMPLER		

DEPTH	SAMPLE	DATE TIME	BLOWS ON SAMPLE	RECOVERY INCHES		USCS SYMBOL	TSF	REMARKS
2.5		05/06/93 13:30	N/A	30	FIRM, (2.5Y,5/6) LIGHT OLIVE BROWN, AND (5Y,5/1) GRAY, SILTY CLAY, LOW PLASTICITY, SOME GRAVEL, DRY, STYROFOAM	CL	2	PID=0 ppm BГ=50-70 cpm
2.5 5.0		05/06/93 13:30	N/A	30	HARD, (5Y,5/1) GRAY, AND (5Y,5/6) OLIVE, SILTY CLAY, SLIGHT PLASTICITY, SOME GRAVEL, DRY, STYROFOAM	CL	3	PID=0 ppm BГ=50-70 cpm
5.0 6.0		05/06/93 13:45	N/A	12	SAA	CL	3	PID=0 ppm BГ=50-70 cpm
6.0 7.5		05/06/93 13:45	N/A	18	FIRM, (5Y,5/1) GRAY, SILTY CLAY, MEDIUM PLASTICITY, SOME GRAVEL, MOIST	CL	1.75	PID=0 ppm BГ=50-70 cpm
7.5 9.0	115319 115320	05/06/93 13:45	N/A	18	FIRM, (5Y,5/1) GRAY, SILTY CLAY, MEDIUM PLASTICITY, SOME GRAVEL, MOIST, SMALL PIECE OF STRIP METAL, PLASTIC, SOME BLACK WASTE MATERIAL	CL	1.75	PID=0 ppm BГ=50-70 cpm
9.0 10.0	115319 115320	05/06/93 13:45	N/A	12	HARD, (2.5Y,5/6) LIGHT OLIVE BROWN, SILTY CLAY, SOME (5Y,5/1) GRAY, SILTY CLAY, SLIGHT PLASTICITY, DRY	CL	2.5	PID=0 ppm BГ=50-70 cpm
10.0 12.5		05/06/93 14:00	N/A	30	HARD, (2.5Y,5/6) LIGHT OLIVE BROWN, SILTY CLAY, WITH SOME (5Y,6/1) GRAY, SILTY CLAY, SOME SMALL GRAVEL, LOW PLASTICITY, DRY	CL	2.5	PID=0 ppm BГ=50-70 cpm
12.5 15.0	115321	05/06/93 14:00	N/A	30	SAA	CL	4	PID=0 ppm BГ=50-70 cpm
15.0 17.0	115322	05/06/93 14:15	N/A	N/A	PUSHED SHELBY TUBE	N/A	N/A	
17.0		05/06/93 00:00	N/A	N/A	BOTTOM OF BORING AT 17 FEET	N/A	N/A	

NOTES:
HOLLOW STEM AUGER W/CME SAMPLER USED TO COLLECT SOIL SAMPLES TO 15.0' SHELBY TUBE WAS THEN PUSHED FROM 15.0' TO 17.0'.
BACKGROUND READINGS: MT = 0 PPM, BETA/GAMMA = 50-70 CPM

Driller: DON SMITH

SAA = Same as Above
PID = Photoionization Detector
N/A = Not Applicable

PROJECT NUMBER: 20.03.05	PROJECT NAME: CRU2 RI PHASE II FIELD INVESTIGATION	
BORING NUMBER: 1992	COORDINATES: NORTH 482243.09 EAST 1379770.85	DATE:11-MAY-93
GROUND ELEVATION: 590	GWL: Depth Date/Time	DATE STARTED: 11-MAY-93
ENGINEER/GEOLOGIST: A COMO	Depth Date/Time	DATE COMPLETE: 11-MAY-93
DRILLING METHOD: HOLLOW STEM AUGER W/CME SAMPLER		

DEPTH	SAMPLE	DATE TIME	BLOWS ON	SAMPLE	RECOVERY	INCHES		USCS	SYMBOL	TSF	REMARKS
2.5		05/11/93 15:15	N/A		30		HARD (2.5Y, 6/4) LIGHT YELLOWISH BROWN AND (5Y, 5/1) GRAY, SILTY CLAY, NO PLASTICITY, SOME SMALL GRAVEL, DRY	CL		4	PID=.6 ppm BГ=40-80 cpm
2.5 3.0		05/11/93 15:15	N/A		6		SAA, DRY	CL		4	PID=.6 ppm BГ=40-80 cpm
3.0 5.0	115348	05/11/93 15:20	N/A		24		@ 15:20 PUSHED SHELBY TUBE FROM 3' TO 5'	N/A		N/A	
5.0 7.5		05/11/93 15:35	N/A		30		FIRM (5Y, 5/3) OLIVE, SILTY CLAY, MEDIUM PLASTICITY, SOME SMALL GRAVEL, DRY	CL		1.25	PID=.6 ppm BГ=40-80 cpm
7.5 10.0	115343 115344 115345	05/11/93 15:35	N/A		30		SAA, DRY, PIECES OF BURNT WOOD	CL		1.25	PID=.6 ppm BГ=40-80 cpm
10.0 12.0		05/11/93 15:50	N/A		24		FIRM (2.5Y, 5/1) GRAY SILTY CLAY, LOW PLASTICITY, SOME (5Y, 2.5/1) BLACK CLAY, SOME (2.5Y, 5/4) LIGHT OLIVE BROWN SILT, SOME GRAVEL, DRY	CL		1	PID=.6 ppm BГ=40-80 cpm
12.0 12.5		05/11/93 15:50	N/A		6		(2.5Y, 5/4) LIGHT OLIVE BROWN, CLAYEY SILT,SOME (5Y, 5/1) GRAY, SILTY CLAY, FEW PIECES OF GRAVEL, DRY	ML		N/A	PID=.6 ppm BГ=40-80 cpm
12.5 15.0		05/11/93 15:50	N/A		30		SAA, DRY	ML		4.5	PID=.6 ppm BГ=40-80 cpm
15.0 17.5		05/11/93 16:35	N/A		30		(2.5Y, 5/4) LIGHT OLIVE BROWN, CLAYEY SILT, SLIGHT PLASTICITY, FEW PIECES OF GRAVEL, DRY	ML		N/A	PID=.6 ppm BГ=40-80 cpm
17.5 20.0	115346	05/11/93 16:35	N/A		30		SAA, DRY, IRON STAINING ON CLEAVAGE PLANES	ML		N/A	PID=.6 ppm BГ=40-80 cpm
20.0 22.0	115349	05/11/93 16:45	N/A		N/A		@ 16:45 PUSHED SHELBY TUBE FROM 20' TO 22'	N/A		N/A	
22.0		05/11/93 00:00	N/A		N/A		BOTTOM OF BORING AT 22 FEET	N/A		N/A	

NOTES:
SOIL BORING USING CME SAMPLER SHELBY TUBE FROM 20' TO 22.5' ARCHIVED.
BACKGROUND READINGS: MT = .6 PPM, BETA/GAMMA = 40-80 CPM

Boring Contractor: PENNSYLVANIA DRILLING CO.
Driller: DON SMITH, SAM SMITH

SAA = Same as Above
PID = Photoionization Detector
N/A = Not Applicable

PROJECT NUMBER: 20.03.05	PROJECT NAME: CRU2 RI PHASE II FIELD INVESTIGATION	
BORING NUMBER: 1993	COORDINATES: NORTH 482177.83 EAST 1379778.93	DATE:11-MAY-93
GROUND ELEVATION: 589.4	GWL: Depth Date/Time	DATE STARTED: 11-MAY-93
ENGINEER/GEOLOGIST: A COMO	Depth Date/Time	DATE COMPLETE: 11-MAY-93
DRILLING METHOD: HOLLOW STEM AUGER W/CME SAMPLER		

DEPTH	SAMPLE	DATE TIME	BLOWS ON SAMPLE	RECOVERY INCHES		USCS SYMBOL	TSF	REMARKS
2.0		05/11/93 09:15	N/A	24	VERY HARD (2.5Y, 4/4) LIGHT OLIVE BROWN, AND (5Y, 5/1) GRAY, SILTY CLAY, NO PLASTICITY, SOME SMALL GRAVEL, DRY	CL	4.5	PID=0 ppm BΓ=40-60 cpm
2.0 2.5		05/11/93 09:15	N/A	6	FIRM (5Y, 5/1) GRAY, SILTY CLAY, SOME (5Y, 5/3) OLIVE, SILTY CLAY, SOME GRAVEL, DRY, PIECES OF CONCRETE, METAL, PLASTIC CUP LIDS, BLACK ASH	CL	1.75	PID=0 ppm BΓ=40-60 cpm
2.5 5.0	115339	05/11/93 09:15	N/A	30	SAA, DRY	CL	1.75	PID=0 ppm BΓ=40-60 cpm
5.0 7.5		05/11/93 09:30	N/A	30	FIRM (5Y, 5/1) GRAY, SILTY CLAY, SOME (5Y, 5/3) OLIVE, SILTY CLAY, SOME GRAVEL, DRY	CL	1	PID=0 ppm BΓ=40-60 cpm
7.5 10.0		05/11/93 09:30	N/A	30	HARD (5Y, 5/1) GRAY TO (5Y, 4/1) DARK GRAY, SILTY CLAY, SLIGHT PLASTICITY, DRY	CL	2.5	PID=0 ppm BΓ=40-60 cpm
10.0 12.5		05/11/93 09:50	N/A	30	HARD (2.5Y, 5/6) LIGHT OLIVE BROWN, AND (5Y, 5/1) GRAY, SILTY CLAY, MEDIUM PLASTICITY, SOME SMALL GRAVEL, DRY	CL	2.5	PID=0 ppm BΓ=40-60 cpm
12.5 15.0		05/11/93 09:50	N/A	30	HARD (2.5Y, 5/6) LIGHT OLIVE BROWN, CLAYEY SILT, NO PLASTICITY, SOME (5Y, 5/1) GRAY CLAY, FEW PIECES OF GRAVEL, DRY	ML	3	PID=0 ppm BΓ=40-60 cpm
15.0 17.5	115340	05/11/93 10:15	N/A	30	VERY HARD (2.5Y, 5/4) LIGHT OLIVE BROWN, CLAYEY SILT, NO PLASTICITY, FEW PIECES OF GRAVEL, DRY	ML	4.5	PID=0 ppm BΓ=40-60 cpm
17.5 19.0		05/11/93 10:15	N/A	1.5	VERY HARD (2.5Y, 5/6) LIGHT OLIVE BROWN AND (5Y, 5/1) GRAY CLAYEY SILT, NO PLASTLICITY, FEW PIECES OF GRAVEL, DRY	ML'	4.5	PID=0 ppm BΓ=40-60 cpm
19.0 21.0	115342	05/11/93 10:25	N/A	N/A	@10:25 DROVE SHELBY TUBE FROM 19.0' TO 21.0" (SAMPLE #115342)	N/A	N/A	
21.0		05/11/93 00:00	N/A	N/A	BOTTOM OF BORING AT 21 FEET	N/A	N/A	

NOTES:
SOIL BORING USING CME SAMPLER. PUSHED SHELBY TUBE FROM 19.0' TO 21.0'.
BACKGROUND READINGS: MT = 0 PPM, BETA/GAMMA = 40-60 CPM

Driller: DON SMITH, SAM SMITH

SAA = Same as Above
PID = Photoionization Detector
N/A = Not Applicable

PROJECT NUMBER: 602 3.2	PROJECT NAME: CRU2 RI PHASE I FIELD INVESTIGATION	
BORING NUMBER: 2027	COORDINATES: NORTH 481969.29 EAST 1379317.37	DATE:10-DEC-87
GROUND ELEVATION: 582.7	GWL: Depth Date/Time	DATE STARTED: 10-DEC-87
ENGINEER/GEOLOGIST: KEGLEY/OAKLEY	Depth Date/Time	DATE COMPLETE: 17-DEC-87
DRILLING METHOD: CABLE-TOOL DRILLING		

DEPTH	SAMPLE	DATE TIME	BLOWS ON SAMPLE	RECOVERY INCHES		USCS SYMBOL	TSF	REMARKS
1.5	007841	12/10/87 13:10	4 4 4	14	VERY STIFF YELLOWISH-BROWN (10YR, 5/4) SILT, SOME SAND AND GRAVEL, TRACE CLAY - DRY.	ML	3.5	PID=0 ppm α=0 ppm BΓ=120 cpm
1.5 3.0	007842	12/10/87 13:35	4 7 7	12	VERY STIFF YELLOWISH BROWN (10YR, 5/4) SILT, SOME SAND AND GRAVEL, TRACE CLAY - DRY. HARD GRAY (2.5, 5/0) SILT, SOME SAND AND LIMESTONE GRAVEL, TRACE CLAY - DRY. HARD YELLOWISH BROWN (10YR, 5/4) SILT AND CLAY, SOME GRAVEL - DRY.	ML ML ML	3.5 4.5 4.0	PID=0 ppm α=0 ppm BΓ=120 cpm
3.0 4.5	007843	12/10/87 13:50	8 8 9	15	HARD YELLOWISH BROWN (10YR, 5/4) SILT AND CLAY, SOME GRAVEL - DRY.	ML	4.0	PID=0 ppm α=0 ppm BΓ=120 cpm
4.5 6.0	007844	12/10/87 14:00	14 24 28	15	HARD YELLOWISH BROWN (10YR, 5/4) SILT AND CLAY, SOME GRAVEL - DRY. DENSE LIGHT GRAY (10YR, 7/2) LIMESTONE GRAVEL AND CLAY - DRY.	ML GC	4.5	PID=0 ppm α=0 ppm BΓ=120 cpm
6.0 7.5	007845	12/10/87 14:10	14 23 26	15	HARD YELLOWISH BROWN (10YR, 5/6) MOTTLED SILT AND CLAY, SOME GRAVEL AND SAND - DRY.	ML	4.5+	PID=0 ppm α=0 ppm BΓ=120 cpm
7.5 9.0	007846	12/10/87 16:23	4 12 19	14	HARD YELLOWISH BROWN (10YR, 5/6) CLAY AND SILT, SOME SAND, TRACE GRAVEL - VERTICAL FRACTURES WITH IRON STAINING - DRY	CL	4.5+	PID=0 ppm α=0 ppm BΓ=60 cpm
9.0 10.5	007847	12/10/87 16:44	13 17 22	18	HARD STRONG BROWN (7.5YR, 5/6) SILT, SOME SAND AND CLAY - DRY. VERTICAL FRACTURES WITH IRON STAINING.	ML	4.5+	PID=0 ppm α=0 ppm BΓ=60 cpm
10.5 12.0	007848	12/10/87 17:02	6 12 18	10	HARD YELLOWISH BROWN (10YR, 5/6) SILT, SOME SAND AND CLAY - DRY. VERTICAL FRACTURES WITH IRON STAINING.	ML	4.5	PID=0 ppm α=0 ppm BΓ=60 cpm
12.0 13.5	007849	12/11/87 08:25	12 15 24	18	HARD LIGHT YELLOWISH BROWN (2.5Y, 6/4) SILT, SOME CLAY AND GRAVEL, TRACE SAND - DRY.	ML	3.25	PID=0 ppm α=0 ppm BΓ=80 cpm
13.5 15.0	007850	12/11/87 08:50	7 12 6	13	VERY STIFF LIGHT YELLOWISH BROWN SILTY CLAY, TRACE FINE GRAVEL AND SAND - MOIST.	CL	3.75	PID=0 ppm α=0 ppm BΓ=80 cpm
15.0 16.5	007851	12/11/87 09:05	5 7 12	15	VERY STIFF LIGHT YELLOWISH BROWN (2.5YR, 6/4) CLAY, SOME SILT, TRACE FINE GRAVEL AND SAND - MOIST. VERY STIFF GRAY (5Y, 5/1) CLAY, TRACE SAND AND SILT - MOIST.	CL CL	3.5 1.5	PID=0 ppm α=0 ppm BΓ=70 cpm
16.5 18.0	007852	12/11/87 09:15	7 15 15	18	VERY STIFF LIGHT YELLOWISH BROWN (2.5YR, 6/4) CLAY, SOME SILT, TRACE GRAVEL AND SAND - MOIST.	CL	3.5	PID=0 ppm α=2 ppm BΓ=70 cpm

NOTES:

SAA = Same as Above
PID = Photoionization Detector
N/A = Not Applicable

000581

PROJECT NUMBER: 602 3.2	PROJECT NAME: CRU2 RI PHASE I FIELD INVESTIGATION	
BORING NUMBER: 2027	COORDINATES: NORTH 481969.29 EAST 1379317.37	DATE:10-DEC-87.
GROUND ELEVATION: 582.7	GWL: Depth Date/Time	DATE STARTED: 10-DEC-87
ENGINEER/GEOLOGIST: KEGLEY/OAKLEY	Depth Date/Time	DATE COMPLETE: 17-DEC-87
DRILLING METHOD: CABLE-TOOL DRILLING		

DEPTH	SAMPLE	DATE TIME	BLOWS ON	SAMPLE	RECOVERY	INCHES		USCS SYMBOL	TSF	REMARKS
18.0 19.5	007853	12/14/87 08:20	3 7 11		5		VERY STIFF LIGHT YELLOWISH BROWN (2.5Y, 6/4) CLAY, SOME SILT, TRACE GRAVEL AND SAND - MOIST. VERY STIFF OLIVE GRAY (5Y, 5/2) CLAY, SOME SILT, TRACE GRAVEL AND SAND - WET.	CL CH	3.5 1.0	PID=0 ppm α=0 ppm BΓ=60 cpm
19.5 21.0	007854	12/14/87 08:40	4 5 8		9		STIFF OLIVE GRAY (5Y, 5/2) CLAY, SOME SILT AND GRAVEL - MOIST.	CH	1.0	PID=0 ppm α=0 ppm BΓ=50 cpm
21.0 22.5	007855	12/14/87 08:50	7 7 7		8		STIFF OLIVE GRAY (5Y, 5/2) CLAY, SOME GRAVEL AND SILT, TRACE SAND - WET. MEDIUM DENSE OLIVE GRAY (5Y, 5/2) SAND, SOME GRAVEL, TRACE CLAY - WET.	CH SW	1.25	PID=0 ppm α=0 ppm BΓ=40 cpm
22.5 24.0	007856	12/14/87 09:15	7 7 6		7		MEDIUM DENSE OLIVE GRAY (5Y, 5/2) SAND AND GRAVEL, TRACE CLAY - WET.	SW	N/A	PID=0 ppm α=0 ppm BΓ=40 cpm
24.0 25.5	007857	12/14/87 09:35	22 14 21		7		DENSE OLIVE GRAY (5Y, 5/2) SAND AND GRAVEL - WET. HARD LIGHT OLIVE GRAY (5Y, 6/2) CLAY, SOME SAND, AND GRAVEL, TRACE SILT - DRY.	SW CL	N/A	PID=0 ppm α=0 ppm BΓ=50 cpm
25.5 27.0	007858	12/14/87 10:40	11 31 37		5		HARD LIGHT OLIVE GRAY (5Y, 6/2) CLAY, SOME SAND, AND GRAVEL, TRACE SILT - DRY. VERY DENSE LIGHT OLIVE GRAY (5Y, 6/2) CLAYEY GRAVEL, SOME SAND - WET.	CL GC	N/A	PID=0 ppm α=0 ppm BΓ=40 cpm
27.0 28.5	007859	12/14/87 11:00	24 44 27		16		VERY DENSE LIGHT OLIVE GRAY (5Y, 6/2) CLAYEY GRAVEL, SOME SAND - WET. VERY DENSE LIGHT OLIVE GRAY (5Y, 6/2) SAND AND GRAVEL - MOIST. HARD GREEN (NOT CLOSE TO ANY MUNSELL COLOR) GRAVELLY CLAY, SOME SILT - MOIST.	GC SW CL	N/A 2.0	PID=0 ppm α=0 ppm BΓ=60 cpm
28.5 30.0	007860	12/14/87 13:30	13 16 27		10		HARD OLIVE GRAY (5Y, 5/2) CLAY, SOME GRAVEL AND SAND, TRACE SILT - MOIST.	CL	2.5	PID=0 ppm α=0 ppm BΓ=100 cpm
30.0 31.5	007861	12/14/87 13:50	4 11 15		14		VERY STIFF OLIVE GRAY (5Y, 5/2) CLAY, SOME GRAVEL, TRACE SAND AND SILT - MOIST.	CL	2.5	PID=0 ppm α=0 ppm BΓ=60 cpm
31.5 33.0	007862	12/14/87 14:15	7 11 27		14		HARD OLIVE GRAY (5Y, 5/2) CLAY, TRACE GRAVEL, SAND, AND SILT.	CL	2.75	α=0 ppm BΓ=70 cpm
33.0 34.5	007863	12/14/87 15:30	5 15 17		15		HARD OLIVE GRAY (5Y, 5/2) CLAY, SOME GRAVEL, TRACE SAND AND SILT - MOIST.	CL	2.75	PID=0 ppm α=0 ppm BΓ=30 cpm
34.5 36.0	007864	12/14/87 15:50	5 12 19		18		HARD OLIVE GRAY (5Y, 5/2) CLAY, TRACE GRAVEL, SAND, AND SILT - MOIST.	CL	2.5	PID=0 ppm α=0 ppm BΓ=70 cpm

NOTES:

SAA = Same as Above
PID = Photoionization Detector
N/A = Not Applicable

PROJECT NUMBER: 602 3.2	PROJECT NAME: CRU2 RI PHASE I FIELD INVESTIGATION	
BORING NUMBER: 2027	COORDINATES: NORTH 481969.29 EAST 1379317.37	DATE:10-DEC-87
GROUND ELEVATION: 582.7	GWL: Depth Date/Time	DATE STARTED: 10-DEC-87
ENGINEER/GEOLOGIST: KEGLEY/OAKLEY	Depth Date/Time	DATE COMPLETE: 17-DEC-87
DRILLING METHOD: CABLE-TOOL DRILLING		

DEPTH	SAMPLE	DATE TIME	BLOWS ON	SAMPLE	RECOVERY INCHES		USCS	SYMBOL	TSF	REMARKS
36.0 37.5	007865	12/15/87 09:15	7 11 18		3	VERY STIFF OLIVE GRAY (5Y, 5/2) CLAY, TRACE GRAVEL, SAND, AND SILT - MOIST.	CL		N/A	PID=0 ppm α=0 ppm BΓ=60 cpm
37.5 39.0	007866	12/15/87 09:40	7 12 15		14	VERY STIFF OLIVE GRAY (5Y, 5/2) CLAY, SOME GRAVEL, TRACE SAND AND SILT - MOIST.	CL		1.75	PID=0 ppm α=0 ppm BΓ=80 cpm
39.0 40.5	007867	12/15/87 10:05	8 20 30		6	VERY STIFF OLIVE GRAY (5Y, 5/2) CLAY, SOME GRAVEL, TRACE SAND AND SILT - MOIST.	CL		1.5	PID=0 ppm α=0 ppm BΓ=40 cpm
40.5 42.0	007868	12/15/87 11:05	7 9 13		16	VERY STIFF OLIVE GRAY (5Y, 5/2) CLAY, SOME GRAVEL, TRACE SAND AND SILT - MOIST. VERY STIFF GRAY (5Y, 6/1) SILT - WET.	CL ML		1.5 0.5	PID=0 ppm α=0 ppm BΓ=60 cpm
42.0 43.5	007869	12/15/87 13:35	16 24 40		15	HARD GRAY (5Y, 6/1) SILT - MOIST. HARD DARK YELLOWISH BROWNISH (10YR, 4/4) SILT - MOIST. VERY DENSE DARK YELLOWISH BROWN (10YR, 4/4) SAND AND GRAVEL - DRY.	ML ML SW		N/A	PID=0 ppm α=0 ppm BΓ=60 cpm
60.0 61.5	007873	12/16/87 13:35	30 49 32		8	VERY DENSE YELLOWISH BROWN (10YR, 5/4) GRAVEL AND SAND - MOIST. VERY DENSE GRAY (10YR, 5/1) SAND, SOME GRAVEL - MOIST.	GW SW		N/A	PID=0 ppm α=0 ppm BΓ=100 cpm
65.0 66.5	007874	12/16/87 14:35	25 25 25		10	DENSE DARK GRAY (10YR, 4/1) SAND, SOME GRAVEL - WET.	SW		N/A	PID=0 ppm α=0 ppm BΓ=70 cpm
70.0 71.5	007875	12/16/87 15:50	11 13 15		9	MEDIUM DENSE DARK GRAY (10YR, 4/1) FINE SAND, TRACE GRAVEL - WET.	SP		N/A	PID=0 ppm α=0 ppm BΓ=50 cpm
75.0 76.5	007876	12/17/87 09:35	44 25 24		18	DENSE DARK GRAY (10YR, 4/1) SAND AND GRAVEL - WET.	SW		N/A	PID=0 ppm α=0 ppm BΓ=60 cpm

NOTES:

SAA = Same as Above
PID = Photoionization Detector
N/A = Not Applicable

PROJECT NUMBER: 602 3.2	PROJECT NAME: CRU2 RI PHASE I FIELD INVESTIGATION	
BORING NUMBER: 2052	COORDINATES: NORTH 482507.16 EAST 1380139.73	DATE:01-NOV-87
GROUND ELEVATION: 584.5	GWL: Depth Date/Time	DATE STARTED: 01-NOV-87
ENGINEER/GEOLOGIST: W. KEGLEY	Depth Date/Time	DATE COMPLETE: 03-NOV-87
DRILLING METHOD: CABLE-TOOL DRILLING		

DEPTH	SAMPLE	DATE TIME	BLOWS ON	SAMPLE	RECOVERY INCHES		USCS SYMBOL	TSF	REMARKS
1.5	007249	11/01/87 08:50	9 13 7		10	HARD OLIVE BROWN (2.5, 4/4) CLAY - DRY.	CL	4.5+	PID=0 ppm α=60-80 ppm BΓ=0 cpm
1.5 3.0	007250	11/01/87 09:15	6 10 8		6	HARD, DARK, GRAYISH BROWN (2.5, 4/2) CLAY, SOME SILT - DRY.	CL	4.5+	PID=0 ppm α=60-80 ppm BΓ=0 cpm
3.0 4.5	007251	11/01/87 09:30	7 6 8		16	VERY STIFF, GRAYISH BROWN (2.5, 5/2) CLAY. SOME SILT, TRACE SAND - DRY.	CL	3.0	PID=0 ppm α=0 ppm BΓ=60-100 cpm
4.5 6.0	007253	11/01/87 09:50	8 6 8		18	STIFF YELLOW (2.5, 7/6) SILT, SOME CLAY, TRACE SAND - DRY.	ML	1.5	PID=7 ppm α=0 ppm BΓ=60-100 cpm
6.0 7.5	007255	11/01/87 10:15	8 5 6		18	STIFF YELLOW (2.5, 7/6) SILT, SOME CLAY, TRACE SAND - DRY.	ML	1.5	PID=7 ppm α=0 ppm BΓ=60-100 cpm
7.5 9.0	007256	11/01/87 10:45	8 7 10		18	VERY STIFF, LIGHT OLIVE BROWN (2.54, 5/4) SILT, SOME CLAY AND SAND TRACE GRAVEL - MOIST.	ML	2.5	PID=0 ppm α=0 ppm BΓ=60-100 cpm
9.0 10.5	007257	11/01/87 13:30	8 9 14		12	MEDIUM STIFF, GRAYISH BROWN (2.5Y, 5/2) CLAY AND SILT, SOME GRAVEL - MOIST.	ML	1.5	PID=0 ppm α=0 ppm BΓ=60-100 cpm
10.5 12.0	007258	11/01/87 14:10	13 9 11		13	VERY STIFF, GRAY (2.54, 5/0) SILT, SOME SAND AND GRAVEL - DRY.	ML	2.5	PID=0 ppm α=0 ppm BΓ=60-100 cpm
13.5 15.0	007260	11/01/87 14:20	3 7 12		14	VERY STIFF, GRAY (5Y, 5/1) SILT, SOME SAND, TRACE OF GRAVEL - DRY.	ML	2.5	PID=0 ppm α=0 ppm BΓ=60-100 cpm
15.0 16.5	007261	11/01/87 15:30	14 16 19		18	VERY STIFF, GRAY (5Y, 5/1) SILT, SOME CLAY, TRACE OF SAND AND GRAVEL - DRY.	ML	3.5	PID=0 ppm α=0 ppm BΓ=60-100 cpm
16.5 18.0	007262	11/01/87 15:45	8 10 12		12	VERY STIFF, GRAY (5Y, 5/1) SILT, SOME SAND AND GRAVEL, TRACE CLAY - DRY.	ML	2.5	PID=0 ppm α=0 ppm BΓ=60-100 cpm
18.0 19.5	007263	11/01/87 16:00	7 9 11		9	VERY STIFF, GRAY (5Y, 5/1) SILT AND SAND, SOME GRAVEL - DRY.	ML	2.5	PID=0 ppm α=0 ppm BΓ=60-100 cpm
19.5 21.0	007264	11/01/87 16:30	1 3 2		2	LOOSE, GRAY (5Y, 5/1) GRAVEL AND COURSE SAND, TRACE CLAY - WET.	GW	N/A	PID=0 ppm α=0 ppm BΓ=60-100 cpm

NOTES:

SAA = Same as Above
PID = Photoionization Detector
N/A = Not Applicable

PROJECT NUMBER: 602 3.2	PROJECT NAME: CRU2 RI PHASE I FIELD INVESTIGATION	
BORING NUMBER: 2052	COORDINATES: NORTH 482507.16 EAST 1380139.73	DATE:01-NOV-87
GROUND ELEVATION: 584.5	GWL: Depth Date/Time	DATE STARTED: 01-NOV-87
ENGINEER/GEOLOGIST: W. KEGLEY	Depth Date/Time	DATE COMPLETE: 03-NOV-87
DRILLING METHOD: CABLE-TOOL DRILLING		

DEPTH	SAMPLE	DATE TIME	BLOWS ON SAMPLE	RECOVERY INCHES		USCS SYMBOL	TSF	REMARKS
21.0 22.5	007265 11/01/87 17:25		3 5 8	1	MEDIUM, DENSE (5Y, 5/1) GRAY GRAVEL AND COUSE SAND, SOME CLAY - WET.	GC	N/A	PID=0 ppm α=0 ppm BΓ=60-100 cpm
22.5 24.0	007266 11/01/87 17:30		1 9 9	14	VERY STIFF (5Y, 5/1) GRAY SAND AND GRAVEL, CLAY AND SILT - MOIST.	SM	2.5	PID=0 ppm α=0 ppm BΓ=60-100 cpm
24.0 25.5	007267 11/01/87 17:50		7 9 11	18	MEDIUM, DENSE GRAY (2.5Y, 5/1) SAND AND SILT WITH SOME GRAVEL AND CLAY.	SM	1.5	PID=0 ppm α=0 ppm BΓ=60-100 cpm
25.5 27.0	007268 11/02/87 08:10		2 3 4	15	LOOSE, GRAY (2.5Y, 5/0) SILT AND SAND, SOME GRAVEL AND CLAY - WET.	ML	N/A	PID=0 ppm α=0 ppm BΓ=60-100 cpm
27.0 28.5	007269 11/02/87 10:00		2 3 5	2	LOOSE, GRAY (2.5Y, 5/0) GRAVEL AND CLAY, SOME SILT - WET.	GC	N/A	PID=0 ppm α=0 ppm BΓ=60-100 cpm
28.5 30.0	007270 11/02/87 13:25		3 7 13	14	MEDIUM STIFF, LIGHT OLIVE GRAY (5Y, 6/2)SILT AND CLAY, SOME GRAVEL - DRY.	ML	0.5	PID=0 ppm α=0 ppm BΓ=60-100 cpm
30.0 31.5	007271 11/02/87 13:45		3 6 13	10	VERY STIFF, OLIVE GRAY (5Y, 5/2) CLAY AND SILT, SOME GRAVEL, TRACE OF WOOD FRAGMENTS - DRY.	CL	3.5	PID=0 ppm α=0 ppm BΓ=60-120 cpm
31.5 33.0	007272 11/02/87 14:05		6 11 11	18	VERY STIFF, OLIVE GRAY (5Y, 5/2) SILT AND CLAY, SOME GRAVEL, TRACE OF SAND - DRY.	ML	3.0	PID=0 ppm α=0 ppm BΓ=60-120 cpm
33.0 34.5	007273 11/02/87 14:35		16 36 30	N/A	STIFF, OLIVE GRAY (5Y, 5/2) SILT AND CLAY, SOME GRAVEL AND SAND - DRY. DENSE LIGHT OLIVE BROWN (2.5Y, 5/4) SAND, SOME GRAVEL - DRY.	ML GW	1.0 N/A	PID=0 ppm α=0 ppm BΓ=60-120 cpm
35.0 36.5	007274 11/02/87 16:25		16 17 22	15	DENSE STRONG BROWN (7.5YR 4/6) SAND AND GRAVEL, SOME SILT, DRY	GW	N/A	PID=0 ppm α=0 ppm BΓ=60-120 cpm
40.0 41.5	007275 11/02/87 16:55		21 27 31	13	VERY DENSE, STRONG BROWN (7.5YR, 5/6) SAND, TRACE GRAVEL, SILT - WET.	SP	N/A	PID=0 ppm α=0 ppm BΓ=60-120 cpm
45.0 46.5	007276 11/02/87 17:00		11 30 42	12	VERY DENSE, STRONG BROWN (7.5YR, 5/6) SAND AND GRAVEL - DRY.	GW	N/A	PID=0 ppm α=0 ppm BΓ=60-120 cpm
50.0 51.5	007277 11/03/87 08:55		37 47 50	13	VERY DENSE, YELLOW (10YR, 7/6) SAND, SOME GRAVEL, TRACE SILT - DRY.	GW	N/A	PID=0 ppm α=0 ppm BΓ=60-120 cpm

NOTES:

SAA = Same as Above
PID = Photoionization Detector
N/A = Not Applicable

PROJECT NUMBER: 602 3.2	PROJECT NAME: CRU2 RI PHASE I FIELD INVESTIGATION	
BORING NUMBER: 2052	COORDINATES: NORTH 482507.16 EAST 1380139.73	DATE:01-NOV-87
GROUND ELEVATION: 584.5	GWL: Depth Date/Time	DATE STARTED: 01-NOV-87
ENGINEER/GEOLOGIST: W. KEGLEY	Depth Date/Time	DATE COMPLETE: 03-NOV-87
DRILLING METHOD: CABLE-TOOL DRILLING		

DEPTH	SAMPLE	DATE TIME	BLOWS ON SAMPLE	RECOVERY INCHES		USCS SYMBOL	TSF	REMARKS
55.0 56.5	007278 11/03/87 11:50		29 23 24	12	DENSE, DARK YELLOWISH BROWN (10YR, 4/6) SAND, SOME GRAVEL - WET	GW	N/A	PID=0 ppm α=0 ppm BΓ=60-120 cpm
65.0 66.5	007560 11/03/87 15:05		3 8 9	7	MEDIUM DENSE, YELLOWISH BROWN SAND AND GRAVEL - WET (10YR, 5/4).	GW	N/A	PID=0 ppm α=0 ppm BΓ=60-120 cpm
80.0 81.5	008629 07/22/88 14:30		13 22 22	3	DENSE COARSE GRAVELLY GREY (10YR 5/1) SAND WET.	SW	N/A	PID=0 ppm α=80-100 ppm

NOTES:

SAA = Same as Above
PID = Photoionization Detector
N/A = Not Applicable

PROJECT NUMBER: 20.03.05	PROJECT NAME: CRU2 RI PHASE II FIELD INVESTIGATION	
BORING NUMBER: 2947	COORDINATES: NORTH 482120.02 EAST 1379906.75	DATE:07-APR-93
GROUND ELEVATION: 589.8	GWL: Depth 72.1 Date/Time 13-Apr-93 13:20	DATE STARTED: 07-APR-93
ENGINEER/GEOLOGIST: P MCCARREN	Depth 68.1 Date/Time 18-Apr-93 14:20	DATE COMPLETE: 18-APR-93
DRILLING METHOD: CABLE TOOL		

DEPTH	SAMPLE / DATE / TIME	BLOWS ON SAMPLE	RECOVERY INCHES		USCS SYMBOL	TSF	REMARKS
1.5	111339 04/07/93 09:20	6 15 15	12	STIFF, (10YR, 3/2) DARK BROWN SILTY CLAY, MOTTLING SOME SAND AND PLANT FIBERS, LOW PLASTICITY, MOIST	CL	1.5	PID=0 ppm α=0 ppm BΓ=60-80 cpm
3.0	111340 04/07/93 09:35	12 13 15	8	STIFF, (10YR, 5/4) BROWN, SILTY CLAY MOTTLING, SOME FINE SAND, LOW PLASTICITY, MOIST	CL	1.5	PID=0 ppm α=0 ppm BΓ=80-120 cpm
4.5	111341 04/07/93 09:40	10 12 11	10	SAA	CL	1.5	PID=0 ppm α=0 ppm BΓ=80-120 cpm
6.0	111342 04/07/93 09:42	11 11 10	12	STIFF, (10YR, 4/2) DARK BROWN,SILTY CLAY, REDDISH MOTTLING, SOME FINE SAND, LOW PLASTICITY, MOIST	CL	1.0	PID=0 ppm α=0 ppm BΓ=80-120 cpm
7.5	111343 04/07/93 09:52	3 5 8	9.5	VERY STIFF, (10YR, 5/2) GRAYISH BROWN SILTY CLAY MOTTLING, SOME FINE SAND AND GRAVELS, LOW PLASTICITY, MOIST	CL	3.0	PID=0 ppm α=0 ppm BΓ=60-80 cpm
9.0	111344 04/07/93 09:55	9 11 14	18	VERY STIFF, (10YR, 5/2) GRAYISH BROWN, SILTY CLAY, MOTTLING, SOME FINE SAND, LOW PLASTICITY, MOIST 9"-18" VERY STIFF (10YR, 5/1) GRAY CLAYEY SILT, MEDIUM PLASTICITY, MOIST	CL ML	3.0	PID=0 ppm α=0 ppm BΓ=80-120 cpm
10.5	111345 04/07/93 10:05	13 25 28	18	VERY STIFF, (10YR, 5/4) YELLOWISH BROWN, SILTY CLAY MOTTLING, SOME FINE SAND, TRACE SMALL GRAVELS, LOW PLASTICITY, MOIST	CL	3.0	PID=0 ppm α=0 ppm BΓ=80-120 cpm
12.0	111346 04/07/93 10:25	9 22 17	16	SAA	CL	3.5	PID=0 ppm α=0 ppm BΓ=80-120 cpm
13.5	111347 04/07/93 10:35	10 13 16	18	VERY STIFF, (10YR, 5/1) GRAY CLAYEY SILT MOTTLING (RED OXIDE) SOME FINE SAND AND SMALL GRAVEL, LOW PLASTICITY, MOIST	ML	3.5	PID=0 ppm α=0 ppm BΓ=80-120 cpm
15.0	111348 04/07/93 13:35	12 19 16	18	VERY STIFF, (10YR, 5/3) BROWN CLAYEY SILT FINE SAND, SOME SMALL GRAVELS, OXIDE STAIN, LOW PLASTICITY, MOIST	ML	3.5	PID=0 ppm α=0 ppm BΓ=60-80 cpm
16.5	111349 04/07/93 14:35	7 10 16	16	VERY STIFF, (2.5Y 5/4) LIGHT OLIVE BROWN CLAYEY SILT, FINE SAND, SOME SMALL GRAVELS, OXIDE STAIN, LOW PLASTICITY, MOIST	ML	2.0	PID=0.0 ppm α=0 ppm BΓ=60-80 cpm
18.0	111350 04/07/93 14:45	7 11 17	16	SAA	ML	2.0	PID=0.0 ppm α=0 ppm BΓ=60-80 cpm
19.5	111351 04/07/93 14:50	9 17 25	16	VERY STIFF, (2.5Y, 4/16) DARK GRAY, CLAYEY SILT, SOME SMALL GRAVELS, OXIDE STAIN, LOW PLASTICITLY, MOIST	ML	3.0	PID=0.0 ppm α=0 ppm BΓ=80-100 cpm

NOTES:
CEMENT PLACED FROM 0.0 TO 1.0 TO HOLD PROTECTIVE PIPE IN PLACE

Driller: CRAIG COULTER
Drilling Equipment: 72 SPEED STAR

SAA = Same as Above
PID = Photoionization Detector
N/A = Not Applicable

02/02/94 13:57

PROJECT NUMBER: 20.03.05	PROJECT NAME: CRU2 RI PHASE II FIELD INVESTIGATION	
BORING NUMBER: 2947	COORDINATES: NORTH 482120.02 EAST 1379906.75	DATE:07-APR-93
GROUND ELEVATION: 589.8	GWL: Depth 72.1 Date/Time 13-Apr-93 13:20	DATE STARTED: 07-APR-93
ENGINEER/GEOLOGIST: P MCCARREN	Depth 68.1 Date/Time 18-Apr-93 14:20	DATE COMPLETE: 18-APR-93
DRILLING METHOD: CABLE TOOL		

DEPTH	SAMPLE	DATE TIME	BLOWS ON SAMPLE	RECOVERY INCHES		USCS SYMBOL	TSF	REMARKS
19.5 21.0	111352	04/07/93 15:05	9 16 26	18	SAA	ML	2.5	PID=0.0 ppm α=0 ppm BΓ=60-80 cpm
21.0 22.5	111353	04/07/93 15:15	7 12 27	16	SAA	ML	3.0	PID=0.0 ppm α=0 ppm BΓ=60-80 cpm
22.5 24.0	111354	04/07/93 16:05	7 15 17	16	VERY STIFF, (2.5Y, 4/1) DARK GRAY CLAYEY SILT, SMALL GRAVELS, LOW PLASTICLITY, MOIST	ML	2.0	PID=0.0 ppm α=0 ppm BΓ=60-80 cpm
24.0 25.5	111355	04/07/93 16:15	9 15 20	14	SAA	ML	2.5	PID=0.0 ppm α=0 ppm BΓ=60-80 cpm
25.5 27.0	111356	04/07/93 16:25	6 12 20	6	SAA	ML	3.5	PID=0.0 ppm α=0 ppm BΓ=60-80 cpm
27.0 28.5	111357	04/08/93 10:25	8 11 19	6	SAA	ML	2.5	PID=0 ppm α=0 ppm BΓ=60-80 cpm
28.5 30.0	111358	04/08/93 10:35	7 10 17	4	SAA	ML	2.0	PID=0 ppm α=0 ppm BΓ=40-60 cpm
30.0 31.5	111359	04/08/93 10:45	7 17 25	3	SAA	ML	3.0	PID=0 ppm α=0 ppm BΓ=40-60 cpm
31.5 33.0	111360	04/08/93 10:55	7 12 23	12	SAA	ML	2.5	PID=0 ppm α=0 ppm BΓ=40-60 cpm
33.0 34.5	111361	04/08/93 13:45	8 13 16 16	8	SAA	ML	2.5	PID=0 ppm α=0 ppm BΓ=40-60 cpm
34.5 36.0	111362	04/08/93 14:00	16 50	4	VERY STIFF, (2.5Y, 4/1) DARK GRAY CLAYEY SILT, SMALL GRAVELS, LOW PLASTICITY, SOME SAND, MOIST	ML	3.0	PID=0 ppm α=0 ppm BΓ=40-60 cpm
36.0 37.5	111363	04/08/93 14:25	50/3"	3	SAA	ML	2.0	PID=0 ppm α=0 ppm BΓ=40-60 cpm
37.5 39.0	111364	04/08/93 14:45	12 17 20	18	SAA	ML	3.5	PID=0 ppm α=0 ppm BΓ=40-60 cpm

NOTES:
CEMENT PLACED FROM 0.0 TO 1.0 TO HOLD PROTECTIVE PIPE IN PLACE

Driller: CRAIG COULTER
Drilling Equipment: 72 SPEED STAR

SAA = Same as Above
PID = Photoionization Detector
N/A = Not Applicable

PROJECT NUMBER: 20.03.05	PROJECT NAME: CRU2 RI PHASE II FIELD INVESTIGATION	
BORING NUMBER: 2947	COORDINATES: NORTH 482120.02 EAST 1379906.75	DATE:07-APR-93
GROUND ELEVATION: 589.8	GWL: Depth 72.1 Date/Time 13-Apr-93 13:20	DATE STARTED: 07-APR-93
ENGINEER/GEOLOGIST: P MCCARREN	Depth 68.1 Date/Time 18-Apr-93 14:20	DATE COMPLETE: 18-APR-93
DRILLING METHOD: CABLE TOOL		

DEPTH	SAMPLE	DATE TIME	BLOWS ON SAMPLE	RECOVERY INCHES		USCS SYMBOL	TSF	REMARKS
39.0 40.5	111365	04/08/93 15:00	40 23 25	16	VERY STIFF, (2.5Y, 4/1) DARK GRAY CLAYEY SILT, SMALL GRAVELS, SMALL SAND LENSES,LOW PLASTICITY, MOIST	ML	3.5	PID=0 ppm α=0 ppm BΓ=40-60 cpm
40.5 42.0	111366	04/08/93 15:15	9 17 23	16	SAA	ML	3.0	PID=0 ppm α=0 ppm BΓ=40-60 cpm
42.0 43.5	111367	04/08/93 15:30	16 50	14	0-7" SAA, 7"-14" VERY DENSE (10YR, 5/6) YELLOWISH BROWN, VERY FINE SAND, MOIST	ML SM	3.0	PID=0 ppm α=0 ppm BΓ=40-60 cpm
43.5 45.0	111368	04/08/93 15:40	24 29 50	16	SAA	SM	N/A	PID=0 ppm α=0 ppm BΓ=40-60 cpm
50.0 51.5	111369	04/12/93 09:10	50/4"	4	VERY DENSE, (10YR, 5/6) YELLOWISH BROWN, MEDIUM TO FINE SILTY SAND, SOME GRAVELS, MOIST	SM	N/A	PID=0 ppm α=0 ppm BΓ=20-40 cpm
51.5 55.0		04/12/93 00:00	N/A	N/A	DESTRUCTIVE DRILLING	N/A	N/A	
55.0 56.5	111370	04/12/93 09:35	50/4"	4	SAA	SM	N/A	PID=0 ppm α=0 ppm BΓ=20-40 cpm
56.5 60.0		04/12/93 00:00	N/A	N/A	DESTRUCTIVE DRILLING	N/A	N/A	
60.0 61.5	111371	04/12/93 14:50	24 40 31	12	SAA	SM	N/A	PID=0 ppm α=0 ppm BΓ=20-40 cpm
61.5 63.0	111372	04/12/93 15:10	9 24 36	14	SAA	SM	N/A	PID=0 ppm α=0 ppm BΓ=20-40 cpm
63.0 64.5	111373	04/12/93 16:00	50/4"	4	SAA	SM	N/A	PID=0 ppm α=0 ppm BΓ=20-40 cpm
64.5 66.0	111374	04/12/93 16:25	50/4"	4	SAA	SM	N/A	PID=0 ppm α=0 ppm BΓ=20-40 cpm
66.0 67.5	111375	04/12/93 16:45	50/4"	4	SAA	SM	N/A	PID=0 ppm α=0 ppm BΓ=20-40 cpm

NOTES:
CEMENT PLACED FROM 0.0 TO 1.0 TO HOLD PROTECTIVE PIPE IN PLACE

Driller: CRAIG COULTER
Drilling Equipment: 72 SPEED STAR

SAA = Same as Above
PID = Photoionization Detector
N/A = Not Applicable

PROJECT NUMBER: 20.03.05	PROJECT NAME: CRU2 RI PHASE II FIELD INVESTIGATION	
BORING NUMBER: 2947	COORDINATES: NORTH 482120.02 EAST 1379906.75	DATE:07-APR-93
GROUND ELEVATION: 589.8	GWL: Depth 72.1 Date/Time 13-Apr-93 13:20	DATE STARTED: 07-APR-93
ENGINEER/GEOLOGIST: P MCCARREN	Depth 68.1 Date/Time 18-Apr-93 14:20	DATE COMPLETE: 18-APR-93
DRILLING METHOD: CABLE TOOL		

DEPTH	SAMPLE	DATE TIME	BLOWS ON	SAMPLE	RECOVERY	INCHES		USCS	SYMBOL	TSF	REMARKS
67.5 69.0	111376	04/12/93 17:10	21 42 50		10		VERY DENSE (10YR, 5/6) YELLOWISH BROWN, MEDIUM TO FINE SILTY SAND, SOME SMALL GRAVELS, MOIST, 6"-10" VERY DENSE, (10YR, 4/1) DARK GRAY, WELL GRADED, COARSE MEDIUM ? FINE SAND AND GRAVELS, WET	SM SW	N/A	PID=0 ppm α=0 ppm BΓ=20-40 cpm
69.0 70.5	111377	04/13/93 09:10	29 41 50		12		VERY DENSE, (10YR, 4/1) DARK GRAY, WELL GRADED COARSE, MEDIUM AND FINE SAND, SOME SILT, WET AND SMALL GRAVELS	SW	N/A	PID=0 ppm α=0 ppm BΓ=20-40 cpm
70.5 72.0	111378	04/13/93 09:40	12 25 34		14		SAA	SW	N/A	PID=0 ppm α=0 ppm BΓ=20-40 cpm
72.0 73.5	111379	04/13/93 10:20	50/4"		4		VERY DENSE, (10YR, 4/1) DARK GRAY WELL GRADED COARSE MEDIUM AND FINE SAND, 15% SMALL GRAVELS, WET	SW	N/A	PID=0 ppm α=0 ppm BΓ=20-40 cpm
73.5 75.0	111380	04/13/93 10:45	12 24 50		18		SAA	SW	N/A	PID=0 ppm α=0 ppm BΓ=20-40 cpm
75.0 76.5	111381	04/13/93 10:55	2 5 15		8		SAA	SW	N/A	PID=0 ppm α=0 ppm BΓ=20-40 cpm
76.5 78.0	111382	04/13/93 11:10	8 27 50		10		SAA	SW	N/A	PID=0 ppm α=0 ppm BΓ=20-40 cpm
78.0 85.0		04/13/93 11:10	N/A		N/A		DESTRUCTIVE DRILLING FROM 78' TO 85'	N/A	N/A	
85.0 85.0		04/13/93 11:10	N/A		N/A		BOTTOM OF BORING 85.0 FT	N/A	N/A	

NOTES:
CEMENT PLACED FROM 0.0 TO 1.0 TO HOLD PROTECTIVE PIPE IN PLACE

Driller: CRAIG COULTER
Drilling Equipment: 72 SPEED STAR

SAA = Same as Above
PID = Photoionization Detector
N/A = Not Applicable

PROJECT NUMBER: 20.03.05	PROJECT NAME: CRU2 RI PHASE II FIELD INVESTIGATION	
BORING NUMBER: 2949	COORDINATES: NORTH 482338.10 EAST 1379718.25	DATE:25-MAR-93
GROUND ELEVATION: 583.8	GWL: Depth Date/Time	DATE STARTED: 25-MAR-93
ENGINEER/GEOLOGIST: K PAYNE	Depth Date/Time	DATE COMPLETE: 07-APR-93
DRILLING METHOD: CABLE TOOL		

DEPTH	SAMPLE / DATE / TIME	BLOWS ON SAMPLE	RECOVERY INCHES		USCS SYMBOL	TSF	REMARKS
1.5	111189 03/26/93 08:40	1 2 4	18	VERY STIFF 910YR, 6/4) LIGHT YELLOWISH BROWN, SILTY CLAY, LOW PLASTICITY, MOIST, MOTTLING	CL	2.5	PID=0 ppm BΓ=40-60 cpm
1.5 3.0	111190 03/26/93 08:45	2 3 5	5	SAA	CL	2.5	PID=0 ppm BΓ=40-60 cpm
3.0 4.0	111191 03/26/93 08:50	6 8	12	STIFF (10YR, 6/2) LIGHT BROWNISH GRAY, LOW PLASTLICITY, MOIST	CL	1.5	PID=0 ppm BΓ=60-80 cpm
4.0 6.0	111192 03/26/93 09:30	6 15 20 25	24	VERY STIFF (10YR, 6/8) BROWNISH YELLOW, SILTY CLAY, NON-PLASTIC, SLIGHTLY MOIST	CL	3	PID=0 ppm BΓ=80-100 cpm
6.0 7.5	111200 03/26/93 10:30	8 10 13	16	MEDIUM DENSE (10YR, 6/4) LIGHT YELLOWISH BROWN, CLAYEY SILT,NON-PLASTIC, SLIGHTLY MOIST	ML	N/A	PID=0 ppm BΓ=60-80 cpm
7.5 9.0	111201 03/26/93 10:40	6 12 14	15	MEDIUM DENSE (10YR, 6/4) LIGHT YELLOWISH BROWN, CLAYEY SILT WITH TRACE GRAVEL, NON-PLASTIC, SLIGHTLY MOIST	ML	N/A	PID=0 ppm BΓ=60-80 cpm
9.0 10.5	111202 03/26/93 15:30	7 11 17	14	MEDIUM DENSE (10YR, 5/3) BROWN, CLAYEY SILT WITH TRACE GRAVEL, NON-PLASTIC, SLIGHTLY MOIST	ML	N/A	PID=0 ppm BΓ=60-80 cpm
10.5 12.0	111203 03/26/93 15:45	3 6 9	12	MEDIUM DENSE (2.5Y, N6/) GRAY, CLAYEY SILT WITH TRACE GRAVEL, SLIGHTLY PLASTIC, SLIGHTLY MOIST	ML	N/A	PID=0 ppm BΓ=60-80 cpm
12.0 13.5	111204 03/26/93 16:00	2 3 6	11	LOOSE (2.5Y, N6/) GRAY, CLAYEY SILT, LOW PLASTICITY, MOIST	ML	N/A	PID=0 ppm BΓ=60-80 cpm
13.5 14.0	03/26/93 16:10	3	N/A	NO RECOVERY	N/A	N/A	
14.0 16.0	111206 111207 03/26/93 16:20	3 5 7 13	22	MEDIUM DENSE (2.5Y, N6/) GRAY, CLAYEY SILT, LOW PLASTICITY, MOIST	ML	N/A	PID=0 ppm BΓ=60-80 cpm
16.0 17.5	111215 03/29/93 08:45	5 3 4	12	LOOSE (5Y, 5/3) OLIVE CLAYEY SILT, TRACE GRAVEL, SLIGHTLY PLASTIC, MOIST	ML	N/A	PID=0 ppm BΓ=60-80 cpm

NOTES:
CEMENT WAS PLACED FROM 0 TO .7 FT TO HOLD THE PROTECTIVE COVER IN PLACE
BACKGROUND: HNU=0 PPM, BETA/GAMMA = 40-60 CPM.
USED 2" DIAMETER SPLIT SPOON SAMPLER EXCEPT FROM 4'-6' AND 14'-16' WHERE 3" USED.

Boring Contractor: PENNSYLVANIA DRILLING CO.

SAA = Same as Above
PID = Photoionization Detector
N/A = Not Applicable

PROJECT NUMBER: 20.03.05	PROJECT NAME: CRU2 RI PHASE II FIELD INVESTIGATION	
BORING NUMBER: 2949	COORDINATES: NORTH 482338.10 EAST 1379718.25	DATE:25-MAR-93
GROUND ELEVATION: 583.8	GWL: Depth Date/Time	DATE STARTED: 25-MAR-93
ENGINEER/GEOLOGIST: K PAYNE	Depth Date/Time	DATE COMPLETE: 07-APR-93
DRILLING METHOD: CABLE TOOL		

DEPTH	SAMPLE	DATE TIME	BLOWS ON	SAMPLE	RECOVERY	INCHES		USCS SYMBOL	TSF	REMARKS
17.5 19.0	111216	03/29/93 09:05	2 5 8		15		MEDIUM DENSE (5Y, 4/3) OLIVE, CLAYEY SILT, TRACE GRAVEL, SLIGHTLY PLASTIC, MOIST	ML	N/A	PID=0 ppm BΓ=40-60 cpm
19.0 20.5	111217	03/29/93 09:35	2 4/4" 6		10		LOOSE (5Y, 5/1) GRAY, CLAYEY SILT, SLIGHTLY PLASTIC, MOIST	ML	N/A	PID=0 ppm BΓ=60-80 cpm
20.5 22.0	111218	03/29/93 09:55	2 4 6		12		LOOSE (5Y, 5/2) OLIVE GRAY, CLAYEY SILT, SLIGHTLY PLASTIC, MOIST	ML	N/A	PID=0 ppm BΓ=60-80 cpm
22.0 23.5	111219	03/29/93 10:15	6 6 4		16		LOOSE (5Y, 5/2) OLIVE GRAY, CLAYEY SILT, SLIGHTLY PLASTIC, MOIST	ML	N/A	PID=0 ppm BΓ=60-80 cpm
23.5 25.0	111220	03/29/93 10:25	25 24 26		5		VERY STIFF (5Y, 4/1) DARK GRAY, SILTY CLAY, MEDIUM PLASTICITY, MOIST	CL	2	PID=0 ppm BΓ=60-80 cpm
25.0 26.5	111221	03/29/93 10:40	18 22 25		6		DENSE (5Y, 4/1) DARK GRAY, CLAYEY SILT, SLIGHT PLASTICITY, MOIST	ML	N/A	PID=0 ppm BΓ=60-80 cpm
26.5 28.0		03/29/93 11:00	18 19 26		0		NO RECOVERY	N/A	N/A	
28.0 29.5	111222	03/29/93 11:20	16 18 22		14		DENSE (5Y, 4/1) DARK GRAY, CLAYEY SILT WITH TRACE GRAVEL, SLIGHT PLASTICITY, MOIST	ML	N/A	PID=0 ppm BΓ=60-80 cpm
29.5 31.0	111223	03/29/93 13:40	6 12 18		13		MEDIUM DENSE (5Y, 5/1) GRAY, CLAYEY SILT TRACE GRAVEL, SLIGHTLY PLASTIC, MOIST	ML	N/A	PID=0 ppm BΓ=40-60 cpm
31.0 32.5	111224	03/29/93 13:55	4 10 13		11		MEDIUM DENSE (5Y, 5/1) GRAY, CLAYEY SILT, TRACE GRAVEL, SLIGHTLY PLASTIC, MOIST	ML	N/A	PID=0 ppm BΓ=60-80 cpm
32.5 34.0	111225	03/29/93 14:05	8 12 16		14		MEDIUM DENSE (5Y, 5/1) GRAY, CLAYEY SILT, TRACE GRAVEL, SLIGHTLY PLASTIC, MOIST	ML	N/A	PID=0 ppm BΓ=40-60 cpm
34.0 35.5	111226	03/29/93 14:15	5 10 21		15		DENSE (5Y, 5/1) GRAY, CLAYEY SILT, SLIGHTLY PLASTIC, MOIST	ML	N/A	PID=0 ppm BΓ=80-100 cpm
35.5 37.0	111227	03/29/93 14:30	9 9 13		7		MEDIUM DENSE (5Y, 5/1) GRAY, CLAYEY SILT, SLIGHTLY PLASTIC, MOIST	ML	N/A	PID=0 ppm BΓ=60-80 cpm

NOTES:
CEMENT WAS PLACED FROM 0 TO .7 FT TO HOLD THE PROTECTIVE COVER IN PLACE
BACKGROUND: HNU=0 PPM, BETA/GAMMA = 40-60 CPM.
USED 2" DIAMETER SPLIT SPOON SAMPLER EXCEPT FROM 4'-6' AND 14'-16' WHERE 3" USED.

Boring Contractor: PENNSYLVANIA DRILLING CO.

SAA = Same as Above
PID = Photoionization Detector
N/A = Not Applicable

PROJECT NUMBER: 20.03.05	PROJECT NAME: CRU2 RI PHASE II FIELD INVESTIGATION	
BORING NUMBER: 2949	COORDINATES: NORTH 482338.10 EAST 1379718.25	DATE:25-MAR-93
GROUND ELEVATION: 583.8	GWL: Depth Date/Time	DATE STARTED: 25-MAR-93
ENGINEER/GEOLOGIST: K PAYNE	Depth Date/Time	DATE COMPLETE: 07-APR-93
DRILLING METHOD: CABLE TOOL		

DEPTH	SAMPLE	DATE TIME	BLOWS ON SAMPLE	RECOVERY INCHES		USCS SYMBOL	TSF	REMARKS
37.0 38.5	111228	03/29/93 14:50	8 10 12	12	MEDIUM DENSE (5Y, 5/1) GRAY, CLAYEY SILT, SLIGHTLY PLASTIC, MOIST	ML	N/A	PID=0 ppm BΓ=40-60 cpm
38.5 40.0	111229	03/29/93 15:00	8 9 18	10	MEDIUM DENSE (2.5Y, 5/4) LIGHT OLIVE BROWN, POORLY GRADED FINE SAND, DRY	SP	N/A	PID=0 ppm BΓ=80-100 cpm
40.0 41.5	111230	03/29/93 15:50	6 8 9	12	MEDIUMD ENSE (2.5Y, 5/6) LIGHT OLIVE BROWN, POORLY GRADED FINE SAND, DRY	SP	N/A	PID=0 ppm BΓ=60-80 cpm
41.5 43.0	111231	03/29/93 16:10	8 16 15	16	DENSE (2.5Y, 5/6) LIGHT OLVIE BROWN, SANDY SILT, NON-PLASTIC, MOIST WITH 6" (2.5Y, N5/) GRAY CLAYEY SILT, SLIGHTLY PLASTIC, MOIST	ML	N/A	PID=0 ppm BΓ=60-80 cpm
43.0 44.5	111232	03/29/93 16:20	3 3 19	10	MEDIUM DENSE (2.5Y, N5/) GRAY SILT, NON-PLASTIC, MOIST	ML	N/A	PID=0 ppm BΓ=60-80 cpm
44.5 46.0	111233	03/29/93 16:35	20 33 45	8	VERY DENSE (2.5Y, 6/4) LIGHT YELLOWISH BROWN, POORLY GRADED FINE SAND WITH TRACE GRAVEL, DRY	SP	N/A	PID=0 ppm BΓ=80-100 cpm
46.0 50.0		03/29/93 00:00	N/A	N/A	DESTRUCTIVE DRILLING	N/A	N/A	
50.0 51.5	111234	03/29/93 17:05	14 17 32	7	DENSE (2.5Y, 6/4) LIGHT YELLOWISH BROWN, POORLY GRADED FINE SAND, DRY	SP	N/A	PID=0 ppm BΓ=60-80 cpm
51.5 55.0		03/30/93 00:00	N/A	N/A	DESTRUCTIVE DRILLING	N/A	N/A	
55.0 56.5	111235	03/30/93 08:40	35 45 50/3"	7	VERY DENSE (2.5Y, 5/6) LIGHT OLIVE BROWN, POORLY GRADED FINE SAND, DRY	SP	N/A	PID=0 ppm BΓ=40-60 cpm
56.5 60.0		03/03/93 00:00	N/A	N/A	DESTRUCTIVE DRILLING	N/A	N/A	
60.0 61.5	111236	03/30/93 10:00	25 37 50	9	VERY DENSE (10YR, 5/2) GRAYISH BROWN, POORLY GRADED FINE SAND WITH TRACE GRAVEL, DRY	SP	N/A	PID=0 ppm BΓ=60-80 cpm
61.5 63.0	111237	03/30/93 10:20	20 30 34	8	VERY DENSE (2.5Y,R, 5/3) LIGHT OLIVE BROWN, WELL GRADED SAND WITH TRACE GRAVEL, DRY	SW	N/A	PID=0 ppm BΓ=60-80 cpm

NOTES:
CEMENT WAS PLACED FROM 0 TO .7 FT TO HOLD THE PROTECTIVE COVER IN PLACE
BACKGROUND: HNU=0 PPM, BETA/GAMMA = 40-60 CPM.
USED 2" DIAMETER SPLIT SPOON SAMPLER EXCEPT FROM 4'-6' AND 14'-16' WHERE 3" USED.

Boring Contractor: PENNSYLVANIA DRILLING CO.

SAA = Same as Above
PID = Photoionization Detector
N/A = Not Applicable

PROJECT NUMBER: 20.03.05	PROJECT NAME: CRU2 RI PHASE II FIELD INVESTIGATION	
BORING NUMBER: 2949	COORDINATES: NORTH 482338.10 EAST 1379718.25	DATE:25-MAR-93
GROUND ELEVATION: 583.8	GWL: Depth Date/Time	DATE STARTED: 25-MAR-93
ENGINEER/GEOLOGIST: K PAYNE	Depth Date/Time	DATE COMPLETE: 07-APR-93
DRILLING METHOD: CABLE TOOL		

DEPTH	SAMPLE	DATE TIME	BLOWS ON SAMPLE	RECOVERY INCHES		USCS SYMBOL	TSF	REMARKS
63.0 64.5	111238 03/30/93 13:45	30 24 33	16	VERY DENSE (2.5Y, 4/2) DARK GRAYISH BROWN, POORLY GRADED FINE SAND, WET	SP	N/A	PID=0 ppm BΓ=80-100 cpm
64.5 66.0	111239 03/30/93 14:00	9 16 16	15	DENSE (2.5Y, 5/2) GRAYISH BROWN, WELL GRADED SAND, WET	SW	N/A	PID=0 ppm BΓ=60-80 cpm
66.0 67.5	111240 03/30/93 14:40	19 39 50	17	VERY DENSE (2.5Y, 4/2) DARK GRAYISH BROWN, POORLY GRADED FINE SAND, WET	SP	N/A	PID=0 ppm BΓ=80-100 cpm
67.5 69.0	111241 03/30/93 15:00	36 50 36	16	VERY DENSE (2.5Y, 4/2) DARK GRAYISH BROWN, POORLY GRADED FINE SAND WITH TRACE GRAVEL, WET	SP	N/A	PID=0 ppm BΓ=60-80 cpm
69.0 70.5	111242 03/30/93 15:20	10 18 26	18	DENSE (2.5Y, 4/2) DARK GRAYISH BROWN, POORLY GRADED FINE SAND, WET	SP	N/A	PID=0 ppm BΓ=60-80 cpm
70.5 72.0	111243 03/30/93 15:50	10 16 18	16	DENSE (2.5Y, 4/2) DARK GRAYISH BROWN, POORLY GRADED FINE SAND, WET	SP	N/A	PID=0 ppm BΓ=60-80 cpm
72.0 73.5	111244 03/30/93 16:15	65 83	10	VERY DENSE (5Y, 4/3) OLIVE, WELL GRADED SAND, WET	SW	N/A	PID=0 ppm BΓ=80-100 cpm
73.5 75.0	111245 03/30/93 16:40	18 24 26	17	VERY DENSE (5Y, 4/3) OLIVE, POORLY GRADED FINE SAND, WET	SP	N/A	PID=0 ppm BΓ=80-100 cpm
79.0	03/30/93 00:00	N/A	N/A	BOTTOM OF BORING AT 79 FEET	N/A	N/A	

NOTES:
CEMENT WAS PLACED FROM 0 TO .7 FT TO HOLD THE PROTECTIVE COVER IN PLACE
BACKGROUND: HNU=0 PPM, BETA/GAMMA = 40-60 CPM.
USED 2" DIAMETER SPLIT SPOON SAMPLER EXCEPT FROM 4'-6' AND 14'-16' WHERE 3" USED.

Boring Contractor: PENNSYLVANIA DRILLING CO.

SAA = Same as Above
PID = Photoionization Detector
N/A = Not Applicable

PROJECT NUMBER: 20.03.05	PROJECT NAME: CRU2 RI PHASE II FIELD INVESTIGATION	
BORING NUMBER: 2951	COORDINATES: NORTH 482158.80 EAST 1379554.77	DATE:13-APR-93
GROUND ELEVATION: 581.63	GWL: Depth 61.7 Date/Time 23-Apr-93 10:20	DATE STARTED: 12-APR-93
ENGINEER/GEOLOGIST: K PAYNE	Depth Date/Time	DATE COMPLETE: 23-APR-93
DRILLING METHOD: CABLE TOOL		

DEPTH	SAMPLE	DATE TIME	BLOWS ON SAMPLE	RECOVERY INCHES		USCS SYMBOL	TSF	REMARKS
1.5	111389	04/13/93 09:30	1 4 6	12	STIFF, (2.5Y4/3) OLIVE BROWN SILTY CLAY WITH MOTTLING, NON-PLASTIC, SLIGHTLY MOIST	CL	1.5	PID=0 ppm α=0 ppm βΓ=100 cpm
3.0	111390	04/13/93 09:33	6 10 2	12	VERY STIFF, (2.5Y5/6) LIGHT OLIVE BROWN SILTY CLAY WITH TRACE GRAVEL, NON-PLASTIC, SLIGLHTLY MOIST	CL	4	PID=0 ppm α=0 ppm βΓ=100 cpm
4.5	111391	04/13/93 09:40	6 21 25	14	HARD, (2.5Y5/6) LIGHT OLIVE BROWN, SILTY CLAY WITH TRACE GRAVEL, NON-PLASTIC, SLIGHTLY MOIST	CL	4.5	PID=0 ppm α=0 ppm βΓ=60 cpm
6.0	111392	04/13/93 09:45	30 33 30	15	VERY DENSE, (2.5Y6/2) LIGHT BROWNISH GRAY, CLAYEY SILT WITH TRACE GRAVEL, NON-PLASTIC, SLIGHTLY MOIST	ML	N/A	PID=0 ppm α=0 ppm βΓ=100 cpm
7.5	111393	04/13/93 09:55	21 27 31	16	VERY DENSE, (2.5Y5/3) LIGHT OLIVE BROWN, CLAYEY SILT WITH TRACE GRAVEL, SLIGHTLY PLASTIC, MOIST	ML	N/A	PID=0 ppm α=0 ppm βΓ=100 cpm
9.0	111394	04/13/93 10:05	34 37 30	17	VERY DENSE, (2.5Y5/3) LIGHT OLIVE BROWN, CLAYEY SILT WITH TRACE GRAVEL, NON-PLASTIC, SLIGHTLY MOIST	ML	N/A	PID=0 ppm α=0 ppm βΓ=70 cpm
10.5	111395	04/13/93 15:00	9 18 23	6	DENSE, (10YR,6/6) BROWNISH YELLOW, CLAYEY SILT, MOTTLING, NON-PLASTIC, SLIGHTLY MOIST	ML	N/A	PID=0 ppm α=0 ppm βΓ=80 cpm
12.0	111396	04/13/93 15:20	10 15 15	14	MEDIUM DENSE, (2.5Y, 6/3) LIGHT YELLOWSIH BROWN, CLAYEY SILT, NON-PLASTIC, SLIGHTLY MOIST	ML	N/A	PID=0 ppm α=0 ppm βΓ=80 cpm
13.5	111397	04/13/93 15:35	4 5 8	7	MEDIUM DENSE, (2.5Y, 4/2) DARK GRAYISH BROWN, CLAYEY SILT, SLLIGLHT PLASTICITY, MOIST	ML	N/A	PID=0 ppm α=0 ppm βΓ=60 cpm
15.0	111398	04/13/93 15:50	1 4 7	6	MEDIUM DENSE, (2.5Y, N4/) DARK GRAY, CLAYEY SILT, LOW PLASTICITY,MOIST	ML	N/A	PID=0 ppm α=0 ppm βΓ=80 cpm
16.5	111399	04/13/93 16:10	2 4 8	5	MEDIUM DENSE, (5Y5/2) OLIVE GRAY, CLAYEY SILT, LOW PLASTICITY, MOIST	ML	N/A	PID=0 ppm α=0 ppm βΓ=60 cpm
18.0	111400	04/13/93 16:30	1 4 8	7	SAA	ML	N/A	PID=0 ppm α=0 ppm βΓ=60 cpm
19.5	111401	04/13/93 16:40	2 4 8	6	MEDIUM DENSE, (5Y5/2) OLIVE GRAY, CLAYEY SILT WITH TRACE GRAVEL, LOW PLASTICITY, MOIST	ML	N/A	PID=0 ppm α=0 ppm βΓ=60 cpm

NOTES:
CEMENT PLACED 0.09 TO .8 FT TO HOLD THE PROTECTIVE COVER. BACKGROUND 4/12/93 PID=0PPM,BG=80CPM,ALPHA=0CPM; 4/13/93 PID=0ppm,BG=80cpm 4/15/93 PID=0PPM,BG=60CPM,ALPHA=0CPM; 4/16/93 PID=0PPM,BG=40-60CPM,ALPHA=0CPM 4/17/93 PID=2-3PPM, BG=60CPM, ALPHA=0CPM

Boring Contractor: PENNSYVANIA DRILLING
Driller: BOB JOHNSON, LONNIE MCGLOKLIN
Drilling Equipment: CYCLONE 42

SAA = Same as Above
PID = Photoionization Detector
N/A = Not Applicable

PROJECT NUMBER: 20.03.05	PROJECT NAME: CRU2 RI PHASE II FIELD INVESTIGATION	
BORING NUMBER: 2951	COORDINATES: NORTH 482158.80 EAST 1379554.77	DATE:13-APR-93
GROUND ELEVATION: 581.63	GWL: Depth 61.7 Date/Time 23-Apr-93 10:20	DATE STARTED: 12-APR-93
ENGINEER/GEOLOGIST: K PAYNE	Depth Date/Time	DATE COMPLETE: 23-APR-93
DRILLING METHOD: CABLE TOOL		

DEPTH	SAMPLE	DATE TIME	BLOWS ON SAMPLE	RECOVERY INCHES		USCS SYMBOL	TSF	REMARKS
19.5 21.0	111402	04/15/93 08:50	25 27 8	14	DENSE, (5Y5/1) GRAY SILTY SAND WITH TRACE GRAVEL, NON-PLASTIC, MOIST	SM	N/A	PID=0 ppm α=0 ppm BΓ=120 cpm
21.0 22.5	111403	04/15/93 09:10	8 16 45	6	VERY DENSE, (5Y4/2) OLIVE GRAY SILTY SAND, NON-PLASTIC, MOIST	SM	N/A	PID=0 ppm α=0 ppm BΓ=60 cpm
22.5 24.0	111404	04/15/93 09:25	31 21 35	8	VERY DENSE, (5Y5/2) OLIVE GRAY SILTY SAND WITH TRACE GRAVEL, NON-PLASTIC, MOIST	SM	N/A	PID=0 ppm α=0 ppm BΓ=60 cpm
24.0 25.5	111405	04/15/93 09:45	11 25 31	5	VERY DENSE, (5Y5/2) OLIVE GRAY SILTY SAND WITH TRACE GRAVEL, NON-PLASTIC, MOIST	SM	N/A	PID=0 ppm α=0 ppm BΓ=60 cpm
25.5 27.0	111406	04/15/93 10:05	12 19 50/3"	9	VERY DENSE, (5Y5/1) GRAY CLAYEY SILT, NON-PLASTIC, MOIST	ML	N/A	PID=0 ppm α=0 ppm BΓ=60 cpm
27.0 28.5	111407	04/15/93 10:30	10 12 14	13	MEDIUM DENSE, (5Y5/1) GRAY CLAYEY SILT WITH TRACE ORGANICS AND GRAVEL, SLIGHT PLASTICITY, MOIST	ML	N/A	PID=0 ppm α=0 ppm BΓ=60 cpm
28.5 30.0	111408	04/15/93 10:40	11 11 17	12	MEDIUM DENSE, (5Y5/1) GRAY CLAYEY SILT, SLIGHT PLASTICITY, MOIST	ML	N/A	PID=0 ppm α=0 ppm BΓ=80 cpm
30.0 31.5	111409	04/15/93 13:50	10 11 15	14	MEDIUM DENSE, (5Y4/1) DARK GRAY CLAYEY SILT, NON-PLASTIC MOIST	ML	N/A	PID=0 ppm α=0 ppm BΓ=100 cpm
31.5 33.0	111410	04/15/93 14:05	5 6 15	8	MEDIUM DENSE, (5Y4/1) DARK GRAY SILTY SAND, NON-PLASTIC, MOIST	SM	N/A	PID=0 ppm α=0 ppm BΓ=60 cpm
33.0 34.5	111411	04/15/93 09:10	12 30 25	18	HARD, (5Y4/1) DARK GRAY, SILTY GRAVELLY, MEDIUM PLASTICITY CLAY, MOIST	CL	4.5	PID=0 ppm α=0 ppm BΓ=60 cpm
34.5 36.0	111412	04/16/93 09:30	17 21 30	13	VERY DENSE, (2.5Y4/4) OLIVE BROWN, WELL GRADED, PEBBLY SAND, DRY	SW	N/A	PID=0 ppm α=0 ppm BΓ=60 cpm
36.0 37.5	111413	04/16/93 09:40	22 28 25	11	VERY DENSE, (2.5Y6/3) LIGHT YELLOWISH BROWN, WELL GRADED SAND, DRY	SW	N/A	PID=0 ppm α=0 ppm BΓ=60 cpm
37.5 39.0	111414	04/16/93 09:55	16 15 21	9	DENSE, (10YR6/3) PALE BROWN, WELL GRADED SAND, DRY	SW	N/A	PID=0 ppm α=0 ppm BΓ=60 cpm

NOTES:
CEMENT PLACED 0.09 TO .8 FT TO HOLD THE PROTECTIVE COVER. BACKGROUND 4/12/93 PID=0PPM,BG=80CPM,ALPHA=0CPM; 4/13/93 PID=0ppm,BG=80cpm 4/15/93 PID=0PPM,BG=60CPM,ALPHA=0CPM; 4/16/93 PID=0PPM,BG=40-60CPM,ALPHA=0CPM 4/17/93 PID=2-3PPM, BG=60CPM, ALPHA=0CPM

Boring Contractor: PENNSYVANIA DRILLING
Driller: BOB JOHNSON, LONNIE MCGLOKLIN
Drilling Equipment: CYCLONE 42

SAA = Same as Above
PID = Photoionization Detector
N/A = Not Applicable

PROJECT NUMBER: 20.03.05	PROJECT NAME: CRU2 RI PHASE II FIELD INVESTIGATION	
BORING NUMBER: 2951	COORDINATES: NORTH 482158.80 EAST 1379554.77	DATE:13-APR-93
GROUND ELEVATION: 581.63	GWL: Depth 61.7 Date/Time 23-Apr-93 10:20	DATE STARTED: 12-APR-93
ENGINEER/GEOLOGIST: K PAYNE	Depth Date/Time	DATE COMPLETE: 23-APR-93
DRILLING METHOD: CABLE TOOL		

DEPTH	SAMPLE	DATE TIME	BLOWS ON	SAMPLE	RECOVERY	INCHES		USCS SYMBOL	TSF	REMARKS
39.0 40.0		04/16/93 00:00	N/A		N/A		NO SAMPLE TAKEN	N/A	N/A	
40.0 41.5	111415	04/16/93 10:45	9 9 9		10		VERY SOFT, (2.5Y5/2) GRAYISH BROWN SILTY SAND, MEDIUM PLASTICITY CLAY, WET	CL	.25	PID=0 ppm α=0 ppm BΓ=60 cpm
41.5 43.0	111416	04/16/93 13:30	27 50/4"		10		VERY DENSE, (2.5Y6/3) LIGHT YELLOWISH BROWN, WELL GRADED PEBBLY SAND, DRY	SW	N/A	PID=0 ppm α=0 ppm BΓ=60 cpm
43.0 45.0		04/16/93 00:00	N/A		N/A		NO SAMPLES TAKEN	N/A	N/A	
45.0 46.5	111417	04/16/93 13:50	7 21 45		7		VERY DENSE, (10YR 6/2) LIGHT BROWNISH GRAY, WELL GRADED, GRAVELLY SAND, DRY	SW	N/A	PID=0 ppm α=0 ppm BΓ=60 cpm
46.5 50.0		04/16/73 00:00	N/A		N/A		NO SAMPLE COLLECTED	N/A	N/A	
50.0 51.5	111418	04/16/93 14:40	11 10 21		10		DENSE, (10YR,4/2) DARK GRAYISH BROWN, WELL GRADED, SILTY, CLAYEY SAND, WET	SC	N/A	PID=0 ppm α=0 ppm BΓ=60 cpm
51.5 55.0		04/16/93 00:00	N/A		N/A		NO SAMPLE COLLECTED	N/A	N/A	
55.0 56.5	111419	04/16/93 15:00	21 19 50		10		VERY DENSE, (2.5Y, 6/2) LIGHT GRAYISH BROWN, POORLY GRADED, GRAVELLY SAND, DRY	SP	N/A	PID=0 ppm α=0 ppm BΓ=60 cpm
56.5 58.0		04/16/93 00:00	N/A		N/A		NO SAMPLE COLLECTED	N/A	N/A	
58.0 59.5	111420	04/17/93 09:10	18 29 30		8		VERY DENSE, (2.5Y, 6/2) LIGHT BROWNISH GRAY, POORLY GRADED, GRAVELLY SAND, DRY	SP	N/A	PID=5.2 ppm α=0 ppm BΓ=60 cpm
59.5 61.0	111421	04/17/93 09:30	4 9 10		9		MEDIUM DENSE, (2.5Y, 5/4) LIGHT OLIVE BROWN, WELL GRADED, GRAVELLY SAND, WET	SW	N/A	PID=6.6 ppm α=0 ppm BΓ=60 cpm
61.0 62.5	111422	04/17/93 09:45	9 10 12		16		MEDIUM DENSE, (2.5Y, 4/2) DARK GRAYISH BROWN, WELL GRADED, GRAVELLY SAND, WET	SW	N/A	PID=8 ppm α=0 ppm BΓ=60 cpm

NOTES:
CEMENT PLACED 0.09 TO .8 FT TO HOLD THE PROTECTIVE COVER. BACKGROUND 4/12/93 PID=0PPM,BG=80CPM,ALPHA=0CPM; 4/13/93 PID=0ppm,BG=80cpm 4/15/93 PID=0PPM,BG=60CPM,ALPHA=0CPM; 4/16/93 PID=0PPM,BG=40-60CPM,ALPHA=0CPM 4/17/93 PID=2-3PPM, BG=60CPM, ALPHA=0CPM

Boring Contractor: PENNSYVANIA DRILLING
Driller: BOB JOHNSON, LONNIE MCGLOKLIN
Drilling Equipment: CYCLONE 42

SAA = Same as Above
PID = Photoionization Detector
N/A = Not Applicable

000597

PROJECT NUMBER: 20.03.05	PROJECT NAME: CRU2 RI PHASE II FIELD INVESTIGATION	
BORING NUMBER: 2951	COORDINATES: NORTH 482158.80 EAST 1379554.77	DATE:13-APR-93
GROUND ELEVATION: 581.63	GWL: Depth 61.7 Date/Time 23-Apr-93 10:20	DATE STARTED: 12-APR-93
ENGINEER/GEOLOGIST: K PAYNE	Depth Date/Time	DATE COMPLETE: 23-APR-93
DRILLING METHOD: CABLE TOOL		

DEPTH	SAMPLE	DATE TIME	BLOWS ON SAMPLE	RECOVERY INCHES		USCS SYMBOL	TSF	REMARKS
62.5 64.0	111423	04/17/93 10:00	14 13 14	12	MEDIUM DENSE, (5Y, 5/1) GRAY, WELL GRADED SAND WITH SOME GRAVEL, WET	SW	N/A	PID=7 ppm α=0 ppm BΓ=60 cpm
64.0 65.5	111424	04/17/93 10:30	18 23 16	11	DENSE, (5Y, 5/1) GRAY, WELL GRADED SAND WITH SOME GRAVEL, WET	SW	N/A	PID=4.9 ppm α=0 ppm BΓ=60 cpm
65.5 67.0	111425	04/17/93 13:15	32 50/3"	10	VERY DENSE, (10YR, 4/1) DARK GRAY, WELL GRADED SAND WITH SOME GRAVEL, WET	SW	N/A	PID=0 ppm α=0 ppm BΓ=60 cpm
67.0 68.5	111426	04/17/93 13:35	13 15 35	15	DENSE, (10YR, 4/1) DARK GRAY, WELL GRADED SAND WITH SOME GRAVEL, WET	SW	N/A	PID=0 ppm α=0 ppm BΓ=60 cpm
68.5 70.0	111427	04/17/93 14:00	12 18 18	16	DENSE, (5Y, 4/2) OLIVE GRAY, WELL GRADED, SAND WITH SOME GRAVEL, WET	SW	N/A	PID=0 ppm α=0 ppm BΓ=60 cpm
70.0 71.5	111428	05/26/93 15:25	10 11 12	15	MEDIUM DENSE (5Y,4/2) OLIVE GRAY, WELL GRADED SAND WITH SOME GRAVEL, WET	SW	N/A	PID=0 ppm BΓ=40-60 cpm
71.5 73.0	111429	04/17/93 15:00	50 50/3"	10	VERY DENSE, (5Y4/2) OLIVE GRAY, WELL GRADED SAND WITH SOME GRAVEL, WET	SW	N/A	PID=0 ppm α=0 ppm BΓ=60 cpm
75.0		04/17/93 00:00	N/A	N/A	BOTTOM OF BORING AT 75.01 FEET	N/A	N/A	

NOTES:
CEMENT PLACED 0.09 TO .8 FT TO HOLD THE PROTECTIVE COVER. BACKGROUND 4/12/93 PID=0PPM,BG=80CPM,ALPHA=0CPM; 4/13/93 PID=0ppm,BG=80cpm 4/15/93 PID=0PPM,BG=60CPM,ALPHA=0CPM; 4/16/93 PID=0PPM,BG=40-60CPM,ALPHA=0CPM 4/17/93 PID=2-3PPM, BG=60CPM, ALPHA=0CPM

Boring Contractor: PENNSYVANIA DRILLING
Driller: BOB JOHNSON, LONNIE MCGLOKLIN
Drilling Equipment: CYCLONE 42

SAA = Same as Above
PID = Photoionization Detector
N/A = Not Applicable

PROJECT NUMBER: 20.03.05	PROJECT NAME: CRU2 RI PHASE II FIELD INVESTIGATION	
BORING NUMBER: 2953	COORDINATES: NORTH 482020.08 EAST 1379744.25	DATE:17-MAY-93
GROUND ELEVATION: 586.6	GWL: Depth 66.35 Date/Time 06-Jun-93 09:20	DATE STARTED: 17-MAY-93
ENGINEER/GEOLOGIST: KEITH PAYNE	Depth Date/Time	DATE COMPLETE: 06-JUN-93
DRILLING METHOD: CABLE TOOL		

DEPTH	SAMPLE / DATE / TIME	BLOWS ON SAMPLE	RECOVERY INCHES		USCS SYMBOL	TSF	REMARKS
1.5	115418 05/17/93 09:20	3 4 18	7	VERY STIFF, (2.5Y, 4/3) OLIVE BROWN, CLAY WITH TRACE GRAVEL, SLIGHT PLASTICITY, MOIST	CL	3	PID=0 ppm α=0 ppm BΓ=80 cpm
1.5 3.0	115419 05/17/93 09:30	20 14 12	10	HARD, (2.5Y, 4/3) OLIVE BROWN, CLAY WITH TRACE GRAVEL, SLIGHT PLASTICITY, SLIGHTLY MOIST	CL	4.5	PID=0 ppm α=0 ppm BΓ=80 cpm
3.0 4.5	05/17/93 09:32	13 12 13	N/A	NO RECOVERY (2 SPOONS DRIVEN)	N/A	N/A	
4.5 6.0	05/17/93 09:35	10 10 11	N/A	NO RECOVERY (2 SPOONS DRIVEN)	N/A	N/A	
6.0 7.5	115420 05/17/93 09:42	8 10 11	6	SOFT, (5Y, 3/2) DARK OLIVE GRAY, CLAY, SLIGHT PLASTICITY, VERY MOIST	CL	.5	PID=0 ppm α=0 ppm BΓ=80 cpm
7.5 9.0	115421 05/17/93 09:48	14 14 15	13	STIFF, (2.5Y, 6/6) OLIVE YELLOW, SANDY CLAY, SLIGHT PLASTICITY, SLIGHTLY MOIST	CL	1.5	PID=0 ppm α=0 ppm BΓ=70 cpm
9.0 10.5	115422 05/17/93 16:05	4 7 13	12	SAA	CL	1.5	PID=0 ppm α=0 ppm BΓ=100 cpm
10.5 12.0	115423 05/17/93 16:20	6 11 18	6	STIFF, (2.5Y, 5/6) LIGHT OLIVE BROWN, CLAY, LOW PLASTICITY, MOIST	CL	1.5	PID=0 ppm α=0 ppm BΓ=100 cpm
12.0 13.5	115424 05/17/93 16:35	10 16 23	18	VERY STIFF, (2.5Y, 5/4) LIGHT OLIVE BROWN, CLAY, SLIGHT PLASTICITY, MOIST	CL	3	PID=0 ppm α=0 ppm BΓ=60 cpm
13.5 15.0	115425 05/17/93 16:47	13 24 28	13	VERY STIFF, (2.5Y, 5/4) LIGHT OLIVE BROWN, CLAY, SLIGHTLY PLASTICITY, MOIST	CL	2.5	PID=0 ppm α=0 ppm BΓ=70 cpm
15.0 16.5	115426 05/19/93 09:15	11 18 24	16	HARD, (2.5Y, 5/2) GRAYISH BROWN, SILTY CLAY, SLIGHT PLASTICITY, MOIST	CL	4.5	PID=0 ppm α=0 ppm BΓ=40 cpm
16.5 18.0	115427 05/19/93 09:30	7 9 14	15	VERY STIFF, (5Y, 4/1) DARK GRAY, SILTY CLAY WITH TRACE GRAVEL, SLIGHT PLASTICITY, MOIST	CL	2.5	PID=0 ppm α=0 ppm BΓ=80 cpm
18.0 19.5	115428 05/19/93 09:40	3 8 9	12	VERY STIFF, (5Y, 4/1) DARK GRAY, SILTY CLAY WITH TRACE SAND, SLIGHT PLASTICITY, MOIST	CL	2.5	PID=0 ppm α=0 ppm BΓ=80 cpm

NOTES:
CEMENT PLACED FROM 0 TO 0.8 FT
BACKGROUND 5/17/93 PID=ppm;BG=70cpm
5/19/93 PID=0ppm;BG=50cpm 5/20/93 PID=0ppm;BG=50cpm
5/20/93 PID=0ppm;BG=50cpm 5/24/93 PID=0ppm;BG=50cpm
5/27/93 PID=0ppm;BG=60cpm 6/1/93 PID=0ppm;BG=60cpm
6/6/93 PID=0ppm;BG=60cpm

Boring Contractor: PENNSYLVANIA DRILLING
Driller: BOB JOHNSON, JOHN VANDINE
Drilling Equipment: CYCLONE 42

SAA = Same as Above
PID = Photoionization Detector
N/A = Not Applicable

000599

PROJECT NUMBER: 20.03.05	PROJECT NAME: CRU2 RI PHASE II FIELD INVESTIGATION	
BORING NUMBER: 2953	COORDINATES: NORTH 482020.08 EAST 1379744.25	DATE:17-MAY-93
GROUND ELEVATION: 586.6	GWL: Depth 66.35 Date/Time 06-Jun-93 09:20	DATE STARTED: 17-MAY-93
ENGINEER/GEOLOGIST: KEITH PAYNE	Depth Date/Time	DATE COMPLETE: 06-JUN-93
DRILLING METHOD: CABLE TOOL		

DEPTH	SAMPLE	DATE TIME	BLOWS ON	SAMPLE	RECOVERY INCHES		USCS SYMBOL	TSF	REMARKS
19.5 21.0		05/19/93 13:30	5 8 10		N/A	NO RECOVERY (2 SPOONS DRIVEN)	N/A	N/A	
21.0 22.5	115429	05/19/93 13:50	3 5 9		10	MEDIUM DENSE, (5Y, 4/1) DARK GRAY, CLAYEY SILT, LOW PLASTICITY, MOIST	ML	N/A	PID=0 ppm α=0 ppm BΓ=80 cpm
22.5 24.0	115430	05/19/93 14:10	3 9 16		18	MEDIUM DENSE, (5Y, 4/1) DARK GRAY, CLAYEY SILT WITH TRACE GRAVEL, LOW PLASTICITY, MOIST (3 IN SPOON)	ML	N/A	PID=0 ppm α=0 ppm BΓ=80 cpm
24.0 25.5	115432	05/19/93 14:40	4 7 50		7	VERY DENSE, (5Y, 5/1) GRAY, CLAYEY SILT, LOW PLASTICITY, MOIST	ML	N/A	PID=0 ppm α=0 ppm BΓ=40 cpm
25.5 27.0	115433	05/19/93 14:50	8 20 14		16	DENSE, (5Y, 4/1) DARK GRAY, GRAVELY SILT, LOW PLASTICITY, MOIST	ML	N/A	PID=0 ppm α=0 ppm BΓ=40 cpm
27.0 28.5	115434	05/19/93 15:00	5 14 27		12	VERY DENSE, (5Y, 4/1) DARK GRAY, GRAVELY SILT, SLIGHT PLASTICITY, MOIST	ML	N/A	PID=0 ppm α=0 ppm BΓ=40 cpm
28.5 30.0	115435	05/19/93 15:10	7 11 16		14	MEDIUM DENSE, (5Y, 4/1) DARK GRAY, GRAVELY SILT, SLIGHT PLASTICITY, MOIST	ML	N/A	PID=0 ppm α=0 ppm BΓ=40 cpm
30.0 31.5	115436	05/20/93 09:50	5 7 13		10	MEDIUM DENSE, (5Y, 4/1) DARK GRAY, CLAYEY SILT WITH TRACE SAND, SLIGHT PLASTICITY, MOIST	ML	N/A	PID=0 ppm α=0 ppm BΓ=80 cpm
31.5 33.0	115437	05/20/93 10:05	7 9 13		9	SAA	ML	N/A	PID=0 ppm α=0 ppm BΓ=80 cpm
33.0 34.5	115438	05/20/93 10:25	3 7 13		6	SAA	ML	N/A	PID=0 ppm α=0 ppm BΓ=60 cpm
34.5 36.0	115439	05/20/93 10:40	10 10 11		12	MEDIUM DENSE, (5Y, 5/1) GRAY CLAYEY SILT WITH TRACE SAND AND GRAVEL, LOW PLASTICITY, MOIST	ML	N/A	PID=0 ppm α=0 ppm BΓ=40 cpm
36.0 37.5	115440	05/20/93 13:40	7 7 15		18	MEDIUM DENSE, (5Y, 4/1) DARK GRAY, SANDY SILT WITH ORGANICS, SLIGHT PLASTICITY, MOIST	ML	N/A	PID=0 ppm α=0 ppm BΓ=60 cpm
37.5 39.0	115441	05/20/93 13:56	10 11 15		18	MEDIUM DENSE, (5Y 4/1) DARK GRAY, CLAYEY SILT WITH TRACE GRAVEL, LOW PLASTICITY, MOIST	ML	N/A	PID=0.0 ppm α=0 ppm BΓ=60 cpm

NOTES:
CEMENT PLACED FROM 0 TO 0.8 FT
BACKGROUND 5/17/93 PID=ppm;BG=70cpm
5/19/93 PID=0ppm;BG=50cpm 5/20/93 PID=0ppm;BG=50cpm
5/20/93 PID=0ppm;BG=50cpm 5/24/93 PID=0ppm;BG=50cpm
5/27/93 PID=0ppm;BG=60cpm 6/1/93 PID=0ppm;BG=60cpm
6/6/93 PID=0ppm;BG=60cpm

Boring Contractor: PENNSYLVANIA DRILLING
Driller: BOB JOHNSON, JOHN VANDINE
Drilling Equipment: CYCLONE 42

SAA = Same as Above
PID = Photoionization Detector
N/A = Not Applicable

PROJECT NUMBER: 20.03.05	PROJECT NAME: OU2 RI PHASE II FIELD INVESTIGATION	
BORING NUMBER: 2953	COORDINATES: NORTH 482020.08 EAST 1379744.25	DATE:17-MAY-93
GROUND ELEVATION: 586.6	GWL: Depth 66.35 Date/Time 06-Jun-93 09:20	DATE STARTED: 17-MAY-93
ENGINEER/GEOLOGIST: KEITH PAYNE	Depth Date/Time	DATE COMPLETE: 06-JUN-93
DRILLING METHOD: CABLE TOOL		

DEPTH	SAMPLE	DATE TIME	BLOWS ON SAMPLE	RECOVERY INCHES		USCS SYMBOL	TSF	REMARKS
39.0 40.5	115442	05/20/93 14:05	8 11 13	14	MEDIUM DENSE, (10YR, 5/4) YELLOWISH BROWN, SANDY SILT WITH TRACE GRAVEL, SLIGHTLY PLASTICITY, SLIGHTLY MOIST	ML	N/A	PID=0 ppm α=0 ppm BΓ=60 cpm
40.5 42.0	115443	05/20/93 15:22	17 23 38	10	VERY DENSE, (10YR, 5/6) YELLOWISH BROWN, SILTY SAND, DRY	SM	N/A	PID=0 ppm α=0 ppm BΓ=50 cpm
42.0 45.0		05/20/93 00:00	N/A	N/A	BEGIN 5.0 FT SAMPLING	N/A	N/A	
45.0 46.5	115444 115445	05/20/93 15:50	35 100 100/3	14	VERY DENSE, (2.5Y, 5/4) LIGHT OLIVE BROWN, POORLY GRADED, SAND WITH TRACE GRAVEL, DRY (3 IN SPOON)	SP	N/A	PID=0 ppm α=0 ppm BΓ=50 cpm
46.5 50.0		05/20/93 00:00	N/A	N/A	NO SAMPLE	N/A	N/A	
50.0 51.5	115446	05/24/93 09:15	29 45 50/2"	12	VERY DENSE, (10YR, 5/6) YELLOWISH BROWN, WELL GRADED SAND WITH GRAVEL, DRY	SW	N/A	PID=0 ppm α=0 ppm BΓ=60 cpm
51.5 55.0		05/24/93 00:00	N/A	N/A	NO SAMPLE	N/A	N/A	
55.0 56.5	115447	05/24/93 10:30	16 16 21	10	DENSE, (10YR, 6/6) BROWNISH YELLOW, WELL GRADED SAND WITH GRAVEL, DRY	SW	N/A	PID=0 ppm α=0 ppm BΓ=60 cpm
56.5 60.0		05/27/93 00:00	N/A	N/A	NO SAMPLE	N/A	N/A	
60.0 61.5	115448	05/27/93 16:50	27 50/3"	6	VERY DENSE, (2.5Y, 5/4) LIGHT OLIVE BROWN, WELL GRADED SAND, DRY	SW	N/A	PID=.3 ppm α=0 ppm BΓ=50 cpm
61.5 63.0	115449	06/01/93 09:45	38 42 50	7	VERY DENSE, (2.5Y, 5/4) LIGHT OLIVE BROWN, WELL GRADED SAND WITH GRAVEL, MOIST	SW	N/A	PID=0 ppm α=0 ppm BΓ=80 cpm
63.0 64.5	115450	06/01/93 09:55	38 50	6	VERY DENSE, (2.5Y, 5/4) LIGHT OLIVE BROWN, WELL GRADED, SAND WITH GRAVEL, MOIST	SW	N/A	PID=0 ppm α=0 ppm BΓ=70 cpm
64.5 66.0	115451	06/01/93 10:00	8 10 15	6	DENSE, (5Y, 4/2) OLIVE GRAY, POORLY GRADED, FINE SAND TRACE GRAVEL, WET	SP	N/A	PID=0 ppm α=0 ppm BΓ=80 cpm

NOTES:
CEMENT PLACED FROM 0 TO 0.8 FT
BACKGROUND 5/17/93 PID=ppm;BG=70cpm
5/19/93 PID=0ppm;BG=50cpm 5/20/93 PID=0ppm;BG=50cpm
5/20/93 PID=0ppm;BG=50cpm 5/24/93 PID=0ppm;BG=50cpm
5/27/93 PID=0ppm;BG=60cpm 6/1/93 PID=0ppm;BG=60cpm
6/6/93 PID=0ppm;BG=60cpm

Boring Contractor: PENNSYLVANIA DRILLING
Driller: BOB JOHNSON, JOHN VANDINE
Drilling Equipment: CYCLONE 42

SAA = Same as Above
PID = Photoionization Detector
N/A = Not Applicable

02/02/94 13:57

PROJECT NUMBER: 20.03.05	PROJECT NAME: CRU2 RI PHASE II FIELD INVESTIGATION	
BORING NUMBER: 2953	COORDINATES: NORTH 482020.08 EAST 1379744.25	DATE:17-MAY-93
GROUND ELEVATION: 586.6	GWL: Depth 66.35 Date/Time 06-Jun-93 09:20	DATE STARTED: 17-MAY-93
ENGINEER/GEOLOGIST: KEITH PAYNE	Depth Date/Time	DATE COMPLETE: 06-JUN-93
DRILLING METHOD: CABLE TOOL		

DEPTH	SAMPLE	DATE TIME	BLOWS ON SAMPLE	RECOVERY INCHES		USCS SYMBOL	TSF	REMARKS
66.0 67.5	115452	06/01/93 10:10	12 13 17	9	DENSE, (5Y, 4/2) OLIVE GRAY, POORLY GRADED FINE SAND, WET	SP	N/A	PID=0 ppm α=0 ppm βΓ=80 cpm
67.5 69.0	115453	06/01/93 10:40	17 50	12	VERY DENSE, (5Y, 4/3) OLIVE, POORLY GRADED, FINE SAND, WET	SP	N/A	PID=0 ppm α=0 ppm βΓ=80 cpm
69.0 70.5	115454 115455	06/01/93 10:50	50	6	VERY DENSE, (5Y, 4/3) OLIVE, POORLY GRADED, FINE SAND, WET (3 IN SPOON)	SP	N/A	PID=0 ppm α=0 ppm βΓ=80 cpm
70.5 72.0	115456	06/01/93 11:05	8 15 16	15	DENSE, (5Y, 4/2) OLIVE GRAY, WELL GRADED SAND, WET	SW	N/A	PID=0 ppm α=0 ppm βΓ=80 cpm
72.0 73.5	115457	06/01/93 11:15	10 13 34	16	VERY DENSE, (5Y, 5/3) OLIVE, WELL GRADED SAND TRACE GRAVEL, WET	SW	N/A	PID=0 ppm α=0 ppm βΓ=70 cpm
73.5 75.0	115458	06/01/93 11:30	9 15 41	12	VERY DENSE, (5Y, 5/3) OLIVE, WELL GRADED SAND WITH GRAVEL, WET	SW	N/A	PID=0 ppm α=0 ppm βΓ=70 cpm
75.0 80.0		06/19/03 00:00	N/A	N/A	NO SAMPLE	N/A	N/A	
80.0		06/01/93 00:00	N/A	N/A	BOTTOM OF BORING AT 80 FEET	N/A	N/A	

NOTES:
CEMENT PLACED FROM 0 TO 0.8 FT
BACKGROUND 5/17/93 PID=ppm;BG=70cpm
5/19/93 PID=0ppm;BG=50cpm 5/20/93 PID=0ppm;BG=50cpm
5/20/93 PID=0ppm;BG=50cpm 5/24/93 PID=0ppm;BG=50cpm
5/27/93 PID=0ppm;BG=60cpm 6/1/93 PID=0ppm;BG=60cpm
6/6/93 PID=0ppm;BG=60cpm

Boring Contractor: PENNSYLVANIA DRILLING
Driller: BOB JOHNSON, JOHN VANDINE
Drilling Equipment: CYCLONE 42

SAA = Same as Above
PID = Photoionization Detector
N/A = Not Applicable

PROJECT NUMBER: 602 3.2	PROJECT NAME: CRU2 RI PHASE I FIELD INVESTIGATION	
BORING NUMBER: 3037	COORDINATES: NORTH 482141.43 EAST 1379791.96	DATE:19-JAN-88
GROUND ELEVATION: 588.5	GWL: Depth Date/Time	DATE STARTED: 19-JAN-88
ENGINEER/GEOLOGIST: W. KEGLEY	Depth Date/Time	DATE COMPLETE: 03-FEB-88
DRILLING METHOD: CABLE-TOOL DRILLING		

DEPTH	SAMPLE / DATE / TIME	BLOWS ON SAMPLE	RECOVERY INCHES		USCS SYMBOL	TSF	REMARKS
1.5	007953 01/19/88 11:03	3 17 19	17	HARD BROWN (10YR, 5/3) CLAY, SOME GRAVEL AND SILT - DRY.	CL	4.5+	PID=0 ppm α=0 ppm βΓ=60 cpm
1.5 3.0	007954 01/19/88 11:05	8 8 13	16	STIFF BROWN (10YR, 5/3) SILT, SOME SAND AND CLAY, TRACE GRAVEL - DRY.	ML	2.0	PID=0 ppm α=0 ppm βΓ=60 cpm
3.0 4.5	007955 01/19/88 13:00	12 10 9	10	STIFF LIGHT YELLOWISH BROWN (2.5Y, 6/4) SILT AND SAND, SOME GRAVEL, TRACE CLAY - DRY.	ML	1.0	PID=0 ppm α=0 ppm βΓ=60 cpm
4.5 6.0	007956 01/19/88 13:14	6 6 6	4	VERY SOFT OLIVE BROWN (2.5Y 4/4) CLAY, SOME SAND AND SILT, TRACE GRAVEL - MOIST.	CL	<.25	PID=0 ppm α=0 ppm βΓ=60 cpm
6.0 7.5	007957 01/19/88 13:21	5 5 10	10	VERY SOFT OLIVE BROWN (2.5Y, 4/4) CLAY, SOME SAND AND SILT, TRACE GRAVEL - MOIST. VERY STIFF VERY DARK GREY (2.5, 3/0) CLAY, SOME SILT, DRY.	CL CL	<.25 3.0	PID=0 ppm α=0 ppm βΓ=60 cpm
7.5 9.0	007958 01/20/88 08:50	5 7 10	12	STIFF DARK GREY (5Y, 4/1) CLAY, SOME SILT - DRY.	CL	1.5	PID=0 ppm α=0 ppm βΓ=60 cpm
9.0 10.5	007959 01/20/88 09:00	3 5 8	15	STIFF DARK GREY (5Y, 4/1) CLAY, SOME SILT - DRY. VERY STIFF BROWNISH YELLOW (10YR, 6/8) MOTTLED CLAY, SOME SILT - DRY.	CL CL	1.5 2.5	PID=0 ppm α=0 ppm βΓ=60 cpm
10.5 12.0	007960 01/20/88 09:28	4 5 8	17	VERY STIFF YELLOWISH BROWN (10YR, 5/8) MOTTLED CLAY AND SILT - DRY.	CL	2.5	PID=0 ppm α=0 ppm βΓ=60 cpm
12.0 13.5	007961 01/20/88 09:42	5 7 11	16	VERY STIFF YELLOWISH BROWN (10YR, 5/4) CLAY AND SILT, TRACE GRAVEL - DRY.	CL	2.5	PID=0 ppm α=0 ppm βΓ=60 cpm
13.5 15.0	007962 01/20/88 09:58	6 12 15	18	VERY STIFF YELLOWISH BROWN (10YR, 5/4) CLAY AND SILT, TRACE GRAVEL - DRY.	CL	2.5	PID=0 ppm α=0 ppm βΓ=60 cpm
15.0 16.5	007963 01/20/88 10:07	10 16 24	18	VERY STIFF STRONG BROWN (7.5YR, 5/6) SILT AND CLAY, SOME GRAVEL - TRACE SAND, DRY.	ML	3.5	PID=0 ppm α=0 ppm βΓ=80 cpm
16.5 18.0	007964 01/20/88 13:30	21 33 41	6	HARD DARK BROWN (10YR, 5/3) SILT AND CLAY, SOME GRAVEL - DRY.	ML	4.25	PID=0 ppm α=0 ppm βΓ=80 cpm
18.0 19.5	007965 01/20/88 14:26	15 13 23	12	HARD DARK BROWN (10YR, 5/3) SILT AND CLAY, SOME GRAVEL - DRY. VERY STIFF DARK GREY SILT, SOME CLAY AND GRAVEL - DRY.	ML ML	4.25 4.0	PID=0 ppm α=0 ppm βΓ=80 cpm

NOTES:

SAA = Same as Above
PID = Photoionization Detector
N/A = Not Applicable

000603

PROJECT NUMBER: 602 3.2	PROJECT NAME: CRU2 RI PHASE I FIELD INVESTIGATION	
BORING NUMBER: 3037	COORDINATES: NORTH 482141.43 EAST 1379791.96	DATE:19-JAN-88
GROUND ELEVATION: 588.5	GWL: Depth Date/Time	DATE STARTED: 19-JAN-88
ENGINEER/GEOLOGIST: W. KEGLEY	Depth Date/Time	DATE COMPLETE: 03-FEB-88
DRILLING METHOD: CABLE-TOOL DRILLING		

DEPTH	SAMPLE	DATE TIME	BLOWS ON SAMPLE	RECOVERY INCHES		USCS SYMBOL	TSF	REMARKS
19.5 21.0	007966	01/20/88 14:38	4 10 14	16	VERY STIFF DARK GREY (5Y, 5/1) CLAY AND SILT, SOME GRAVEL - DRY.	CL	2.5	PID=0 ppm α=0 ppm BΓ=80 cpm
21.0 22.5	007967	01/20/88 15:05	6 10 12	13	VERY STIFF DARK GREY (5Y 4/1) CLAY AND SILT, SOME GRAVEL - DRY.	CL	2.5	PID=0 ppm α=0 ppm BΓ=80 cpm
22.5 24.0	007968	01/20/88 15:27	4 8 14	14	STIFF GREY (5Y, 5/1) CLAY AND SILT, SOME GRAVEL - DRY.	CL	1.25	PID=0 ppm α=0 ppm BΓ=80 cpm
24.0 25.5	007969	01/20/88 15:42	6 8 13	18	STIFF DARK GREY (5Y 4/1) CLAY AND SILT, SOME GRAVEL - DRY.	CL	1.25	PID=0 ppm α=0 ppm BΓ=80 cpm
25.5 27.0	007970	01/20/88 15:51	4 7 12	12	STIFF DARK GREY (5Y, 5/1) CLAY AND SILT, SOME GRAVEL, TRACE SAND - DRY.	CL	1.5	PID=0 ppm α=0 ppm BΓ=80 cpm
27.0 28.5	007971	01/22/88 09:20	4 5 11	4	VERY SOFT GREY (5Y 5/1) CLAY AND SILT, SOME GRAVEL - DRY.	CL	<.25	PID=0 ppm α=0 ppm BΓ=120 cpm
30.0 31.5	007973	01/22/88 10:07	14 22 26	12	HARD GREY (5Y, 5/1) CLAY, SOME GRAVEL, TRACE SILT - DRY.	CL	>4.5	PID=0 ppm α=0 ppm BΓ=80 cpm
31.5 33.0	007974	01/22/88 10:34	20 21 27	15	HARD GREY (5Y, 5/1) CLAY, SOME GRAVEL, TRACE SILT - DRY.	CL	3.75	PID=0 ppm α=0 ppm BΓ=80 cpm
33.0 34.5	007975	01/22/88 10:56	6 13 16	16	VERY STIFF GREY (5Y, 5/1) CLAY, SOME GRAVEL AND SAND, TRACE SILT - DRY.	CL	4.0	PID=0 ppm α=0 ppm BΓ=80 cpm
34.5 36.0	007976	01/22/88 13:35	11 12 15	15	STIFF GREY (5Y, 5/1) CLAY AND SILT, SOME GRAVEL AND SAND - DRY.	CL	1.75	PID=0 ppm α=0 ppm BΓ=80 cpm
36.0 37.5	007977	01/22/88 14:45	5 8 13	10	STIFF GREY (5Y, 5/1) SILTY CLAY, SOME GRAVEL AND SAND - DRY.	CL	1.5	PID=0 ppm α=0 ppm BΓ=80 cpm
37.5 39.0	007978	01/22/88 15:08	5 10 13	3	VERY SOFT GREY (5Y, 5/1 GRAVELLY CLAY, SOME SAND AND SILT - MOIST.	CL	<.25	PID=0 ppm α=0 ppm BΓ=80 cpm
39.0 40.5	007979	01/22/88 15:35	1 5 8	12	STIFF GREY (5Y, 5/1) SILTY CLAY, SOME SAND AND GRAVEL - MOIST.	CL	1.25	PID=0 ppm α=0 ppm BΓ=80 cpm

NOTES:

SAA = Same as Above
PID = Photoionization Detector
N/A = Not Applicable

PROJECT NUMBER: 602 3.2	PROJECT NAME: CRU2 RI PHASE I FIELD INVESTIGATION	
BORING NUMBER: 3037	COORDINATES: NORTH 482141.43 EAST 1379791.96	DATE:19-JAN-88
GROUND ELEVATION: 588.5	GWL: Depth Date/Time	DATE STARTED: 19-JAN-88
ENGINEER/GEOLOGIST: W. KEGLEY	Depth Date/Time	DATE COMPLETE: 03-FEB-88
DRILLING METHOD: CABLE-TOOL DRILLING		

DEPTH	SAMPLE	DATE TIME	BLOWS ON SAMPLE	RECOVERY INCHES		USCS SYMBOL	TSF	REMARKS
40.5 42.0	008105	01/22/88 16:00	5 28 12	9	STIFF GREY (5Y 5/1) GRAVELLY CLAY, SOME SAND AND SILT - MOIST.	CL	1.5	PID=0 ppm α=0 ppm βΓ=80 cpm
42.0 43.5	008106	01/22/88 16:25	5 15 23	10	STIFF GREY (5Y 5/1) GRAVELLY CLAY, SOME SAND AND SILT - MOIST. DENSE YELLOWISH BROWN (10YR 5/4) SAND - DRY.	CL SP	1.5	PID=0 ppm α=0 ppm βΓ=80 cpm
45.0 46.5	008107	01/22/88 16:46	27 40 26	13	VERY DENSE YELLOWISH BROWN (10YR, 5/4) SAND - DRY.	SP	N/A	PID=0 ppm α=0 ppm βΓ=80 cpm
70.0 71.5	008112	01/24/88 10:08	41 40 42	10	VERY DENSE DARK GREY (10YR, 4/1) GRAVELLY SAND - WET.	SW	N/A	PID=0 ppm βΓ=100 cpm
75.0 76.5	008113	01/24/88 14:20	17 27 27	14	VERY DENSE GREY (10YR, 5/1) SAND, TRACE GRAVEL AND SILT - WET.	SP	N/A	PID=0 ppm βΓ=60 cpm
80.0 81.5	008114	01/24/88 15:54	30 27 32	15	VERY DENSE GREY (10YR, 5/1) SAND, SOME GRAVEL, TRACE SILT - DRY.	SP	N/A	PID=0 ppm βΓ=60 cpm
90.0 91.5	008116	01/25/88 11:00	6 7 9	5	MEDIUM DENSE OLIVE GREY (5Y, 5/2) SANDY GRAVEL, TRACE SILT - WET.	GW	N/A	PID=0 ppm βΓ=60 cpm
95.0 96.5	008117	01/25/88 13:30	14 19 28	10	DENSE GREY (10YR, 5/1) SAND, SOME GRAVEL, TRACE SILT - WET.	SW	N/A	PID=0 ppm α=0 ppm βΓ=40 cpm
100.0 101.5	008118	01/25/88 14:55	9 13 23	12	DENSE VERY DARK GREY (10YR, 3/1) SAND, TRACE GRAVEL AND SILT - WET.	SP	N/A	PID=0 ppm βΓ=40 cpm
105.0 106.5	008119	01/25/88 16:10	3 4 10	18	MEDIUM DENSE VERY DARK GREY (10YR 3/1) SAND - WET. MEDIUM DENSE VERY DARK GREY (10YR 3/1) GRAVEL, SOME SAND - WET.	SP GW	N/A	PID=0 ppm βΓ=60 cpm
110.0 111.5	008120	01/26/88 13:15	23 26 27	15	VERY DENSE DARK OLIVE GREY (5Y, 5/2) SAND, TRACE GRAVEL AND SILT - WET.	SP	N/A	βΓ=40 cpm
135.0 136.5	008123	02/03/88 09:20	4 11 20	12	STIFF DARK GREY (5Y, 4/1) CLAY, TRACE SILT - MOIST.	CL	1.0	PID=0 ppm α=0 ppm βΓ=60 cpm

NOTES:

SAA = Same as Above
PID = Photoionization Detector
N/A = Not Applicable

000005

TABLE C-23

TABLE C-23

MONITORING WELL INSTALLATION RECORD

PROJECT NAME: Fernald Environmental Management Project	**PROJECT LOCATION:** Fernald
BORING ID NO: 1035	**COUNTY:** Hamilton
PROJECT ID: NA	**STATE:** Ohio
DATE INSTALLED: March 21, 1988	**CONTRACTOR:** NA
FIELD ENG./GEOL.: M. Slusarski	**DRILLED BY:** NA
TYPE OF SEAL: Bentonite	**DRILLING METHOD:** Cable-Tool Drilling
DEVELOPEMENT METHOD: NA	**TYPE OF BIT:** Flat Head Hammer
SURVEY DATUM	**SAND PACK TYPE:** NA
	WATER LEVEL/DATE: NA

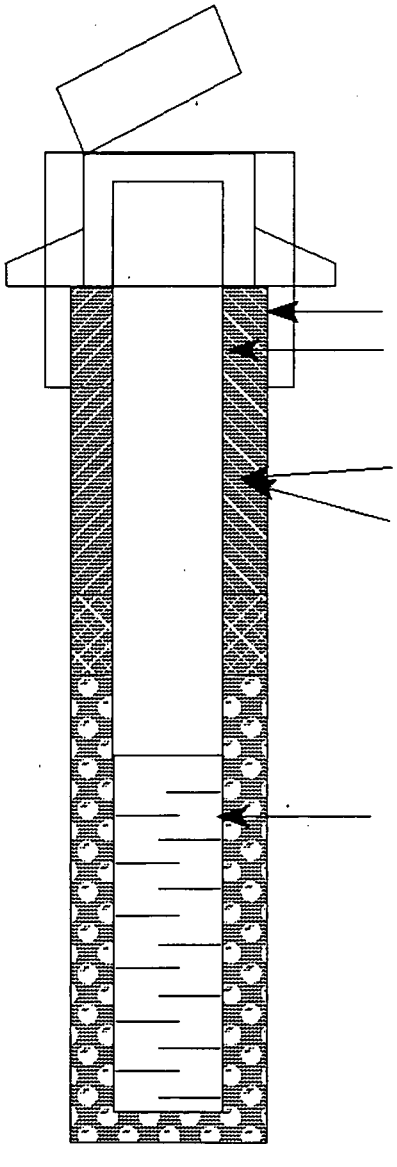

586.65 ft, Top of Casing (Protective pipe)
586.19 ft, Top of Well
584.8 ft, Concrete Elevation
584.3 ft, Ground Elevation
10 3/8 in, Boring Diameter
4 in, Casing Diameter
2.5 Bottom Protective Pipe
S. S. Casing Material
Grout
Other Bentonite
0 ft, Top of Bentonite
9 ft, Bottom of Bentonite
13 ft, Top of Screen
Well Screen
4 ID in, Diameter
.01 in, Slot
11 Length (ft)
S. S. Material
24 ft, Bottom of Screen
27 ft, Bottom of Boring

Note: Elevations in feet above mean sea level.

TABLE C-23

MONITORING WELL INSTALLATION RECORD

PROJECT NAME: Fernald Environmental Management Project	**PROJECT LOCATION:** Fernald
BORING ID NO: 1038	**COUNTY:** Hamilton
PROJECT ID: NA	**STATE:** Ohio
DATE INSTALLED: January 13, 1988	**CONTRACTOR:** NA
FIELD ENG./GEOL.: W. Kegley	**DRILLED BY:** NA
TYPE OF SEAL: Bentonite	**DRILLING METHOD:** Cable-Tool Drilling
DEVELOPEMENT METHOD: NA	**TYPE OF BIT:** Flat Head Hammer
SURVEY DATUM	**SAND PACK TYPE:** NA
	WATER LEVEL/DATE: NA

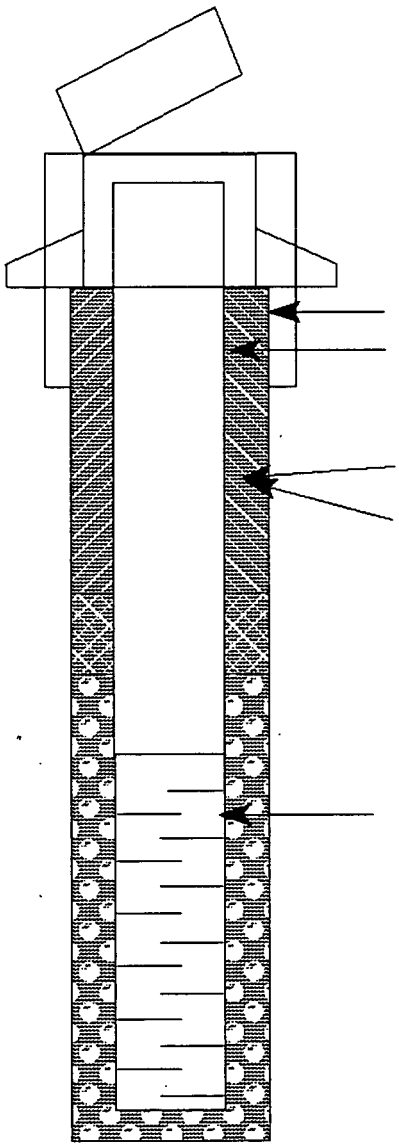

584.61 ft, Top of Casing (Protective pipe)
584.09 ft, Top of Well
582.4 ft, Concrete Elevation
581.9 ft, Ground Elevation
10 3/8 in, Boring Diameter
4 in, Casing Diameter
2.5 Bottom Protective Pipe
S. S. Casing Material
■ Grout
□ Other _____
9.5 ft, Top of Bentonite
14.2 ft, Bottom of Bentonite
16 ft, Top of Screen
Well Screen
4 in, Diameter
.01 in, Slot
10 Length (ft)
S. S. Material
26 ft, Bottom of Screen
28.5 ft, Bottom of Boring

Note: Elevations in feet above mean sea level.

TABLE C-23

MONITORING WELL INSTALLATION RECORD

PROJECT NAME: Fernald Environmental Management Project	**PROJECT LOCATION:** Fernald
BORING ID NO: 1719	**COUNTY:** Hamilton
PROJECT ID: NA	**STATE:** Ohio
DATE INSTALLED: August 10, 1991	**CONTRACTOR:** NA
FIELD ENG./GEOL.: J. Lear	**DRILLED BY:** NA
TYPE OF SEAL: Grout	**DRILLING METHOD:** Auger
DEVELOPEMENT METHOD: NA	**TYPE OF BIT:** 10' Hollow Auger
SURVEY DATUM	**SAND PACK TYPE:** NA
	WATER LEVEL/DATE: NA

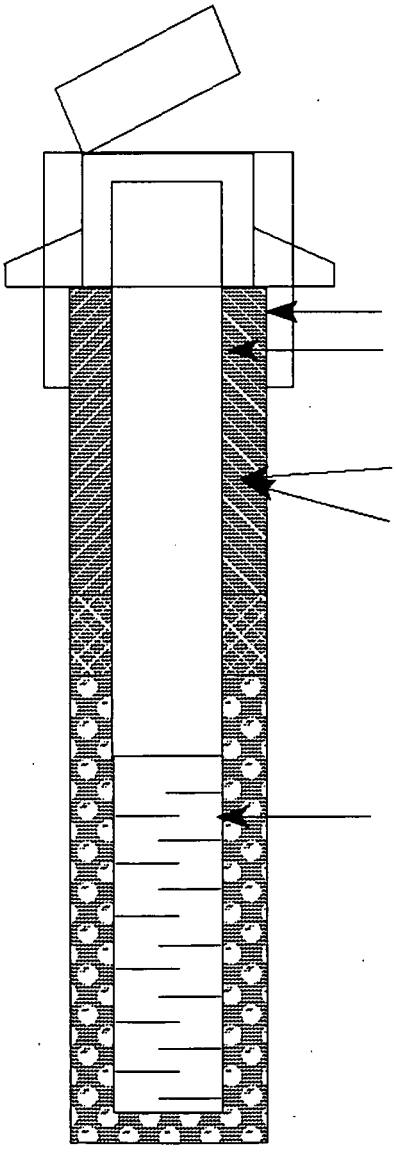

592.74 ft, Top of Casing (Protective pipe)
592.28 ft, Top of Well
NA ft, Concrete Elevation
590.1 ft, Ground Elevation
10 in, Boring Diameter
4 in, Casing Diameter
2.5 Bottom Protective Pipe
S. S. Casing Material
■ Grout
□ Other _____
11 ft, Top of Bentonite
16.25 ft, Bottom of Bentonite
12.75 ft, Top of Screen
Well Screen
4 ID in, Diameter
.01 in, Slot
3 Length (ft)
S. S. Material
15.75 ft, Bottom of Screen
19.5 ft, Bottom of Boring

Note: Elevations in feet above mean sea level.

TABLE C-23

MONITORING WELL INSTALLATION RECORD

PROJECT NAME: Fernald Environmental Management Project	**PROJECT LOCATION:** Fernald
BORING ID NO: 2027	**COUNTY:** Hamilton
PROJECT ID: NA	**STATE:** Ohio
DATE INSTALLED: December 18, 1987	**CONTRACTOR:** NA
FIELD ENG./GEOL.: D. Oakley, W. Kegely	**DRILLED BY:** NA
TYPE OF SEAL: Bentonite	**DRILLING METHOD:** Cable-Tool Drilling
DEVELOPEMENT METHOD: NA	**TYPE OF BIT:** Flat Head Hammer
SURVEY DATUM	**SAND PACK TYPE:** NA
	WATER LEVEL/DATE: NA

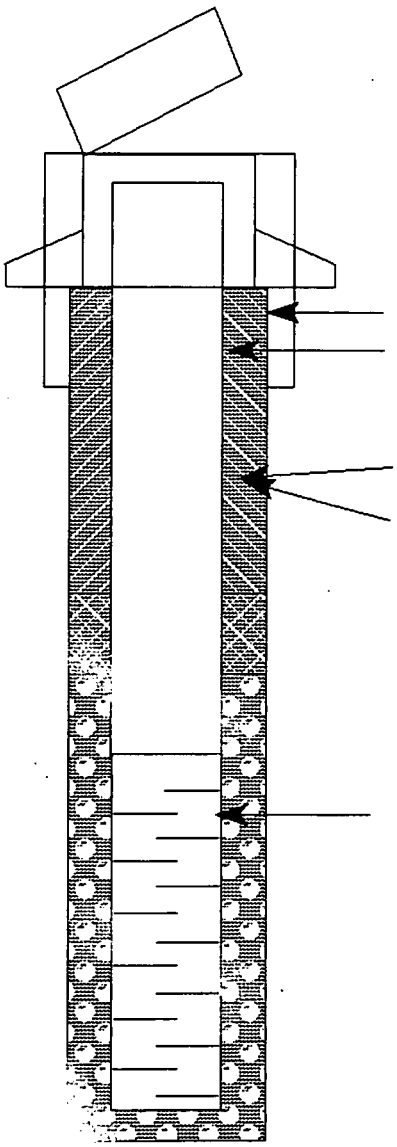

585.9 ft, Top of Casing (Protective pipe)
585.55 ft, Top of Well
538.6 ft, Concrete Elevation
582.7 ft, Ground Elevation
10 3/8 in, Boring Diameter
4 in, Casing Diameter
2.5 Bottom Protective Pipe
S. S. Casing Material
■ Grout
□ Other _____
47 ft, Top of Bentonite
56 ft, Bottom of Bentonite
58.4 ft, Top of Screen
Well Screen
4 in, Diameter
.01 in, Slot
15 Length (ft)
S. S. Material
73.4 ft, Bottom of Screen
76.5 ft, Bottom of Boring

Note: Elevations in feet above mean sea level.

TABLE C-23

MONITORING WELL INSTALLATION RECORD

PROJECT NAME: Fernald Environmental Management Project	**PROJECT LOCATION:** Fernald
BORING ID NO: 2037	**COUNTY:** Hamilton
PROJECT ID: NA	**STATE:** Ohio
DATE INSTALLED: February 20, 1988	**CONTRACTOR:** NA
FIELD ENG./GEOL.: M. Slisarski	**DRILLED BY:** NA
TYPE OF SEAL: Bentonite	**DRILLING METHOD:** Cable-Tool Drilling
DEVELOPEMENT METHOD: NA	**TYPE OF BIT:** Flat Head Hammer
SURVEY DATUM	**SAND PACK TYPE:** NA
	WATER LEVEL/DATE: NA

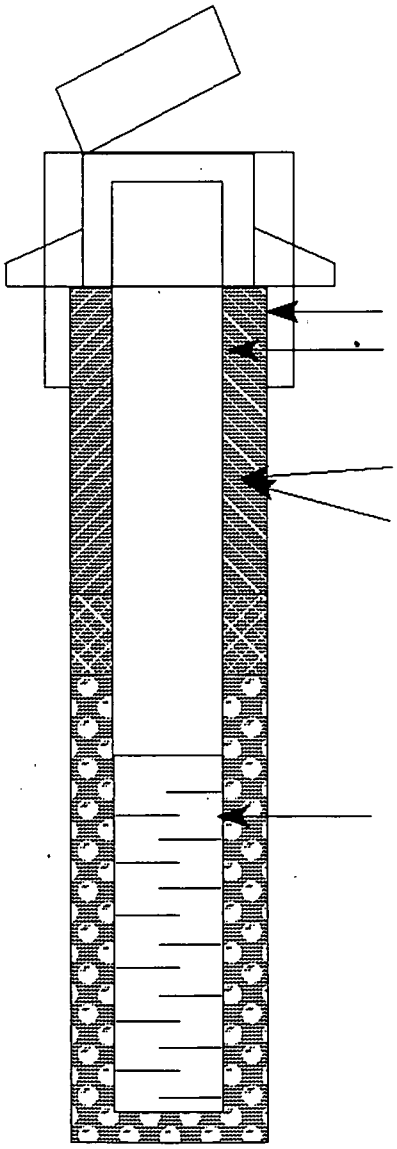

591.08 ft, Top of Casing (Protective pipe)
590.54 ft, Top of Well
589.02 ft, Concrete Elevation
588.5 ft, Ground Elevation
10 3/8 in, Boring Diameter
4 in, Casing Diameter
2.5 Bottom Protective Pipe
S. S. Casing Material
■ Grout
□ Other _____
57 ft, Top of Bentonite
61 ft, Bottom of Bentonite
65 ft, Top of Screen
Well Screen
4 in, Diameter
.01 in, Slot
15 Length (ft)
S. S. Material
80 ft, Bottom of Screen
84 ft, Bottom of Boring

Note: Elevations in feet above mean sea level.

TABLE C-23

MONITORING WELL INSTALLATION RECORD

PROJECT NAME: Fernald Environmental Management Project	**PROJECT LOCATION:** Fernald
BORING ID NO: 1947	**COUNTY:** Hamilton
PROJECT ID: 20.03.05	**STATE:** Ohio
DATE INSTALLED: 4-28-93	**CONTRACTOR:** Pennsylvania Drilling
FIELD ENG./GEOL.: J. Reagan	**DRILLED BY:** Marty Watral
TYPE OF SEAL: Bentonite	**DRILLING METHOD:** Hollow Stem Auger
DEVELOPEMENT METHOD: Surge-Bail	**TYPE OF BIT:** Auger
SURVEY DATUM	**SAND PACK TYPE:** 10/20 Silica
	WATER LEVEL/DATE: 580.4/5-7-93

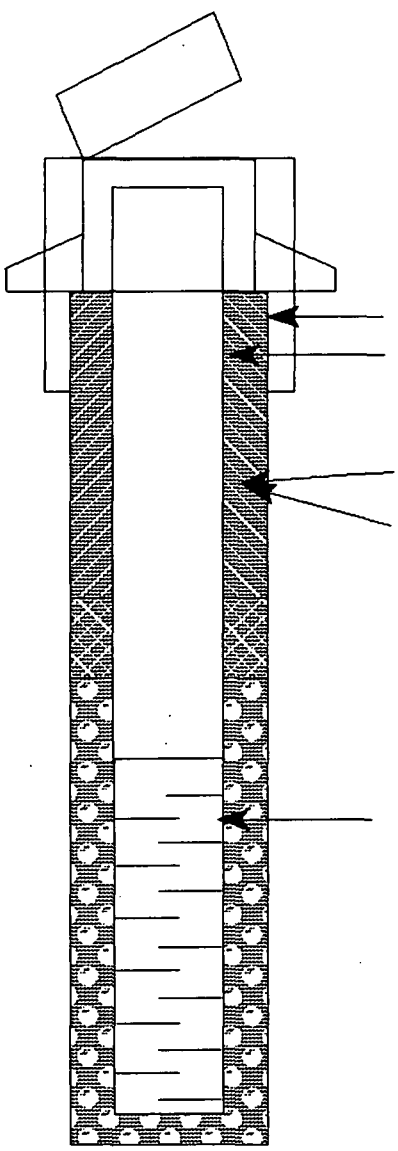

592.48 ft, Top of Casing (Protective pipe)
591.88 ft, Top of Well
NA ft, Concrete Elevation
590.2 ft, Ground Elevation
8.5 in, Boring Diameter
2 in, Casing Diameter
2.5 Bottom Protective Pipe
S. S. Casing Material
■ Grout
□ Other _____
7 ft, Top of Bentonite
8.5 ft, Bottom of Bentonite
10.5 ft, Top of Screen
Well Screen
2 in, Diameter
.01 in, Slot
9.7 Length (ft)
S. S. Material
20.2 ft, Bottom of Screen
20.5 ft, Bottom of Boring

Note: Elevations in feet above mean sea level.

TABLE C-23

MONITORING WELL INSTALLATION RECORD

PROJECT NAME: Fernald Environmental Management Project	**PROJECT LOCATION:** Fernald
BORING ID NO: 1950	**COUNTY:** Hamilton
PROJECT ID: 20.03.05	**STATE:** Ohio
DATE INSTALLED: 5-6-93	**CONTRACTOR:** Pennsylvania Drilling Co.
FIELD ENG./GEOL.: J. Regan	**DRILLED BY:** M. Watral, B. Deiley
TYPE OF SEAL: Bentonite	**DRILLING METHOD:** Auger
DEVELOPEMENT METHOD: Surge-Bail	**TYPE OF BIT:** Auger
SURVEY DATUM	**SAND PACK TYPE:** 10/20 Silica
	WATER LEVEL/DATE: 573.95/5-7-93

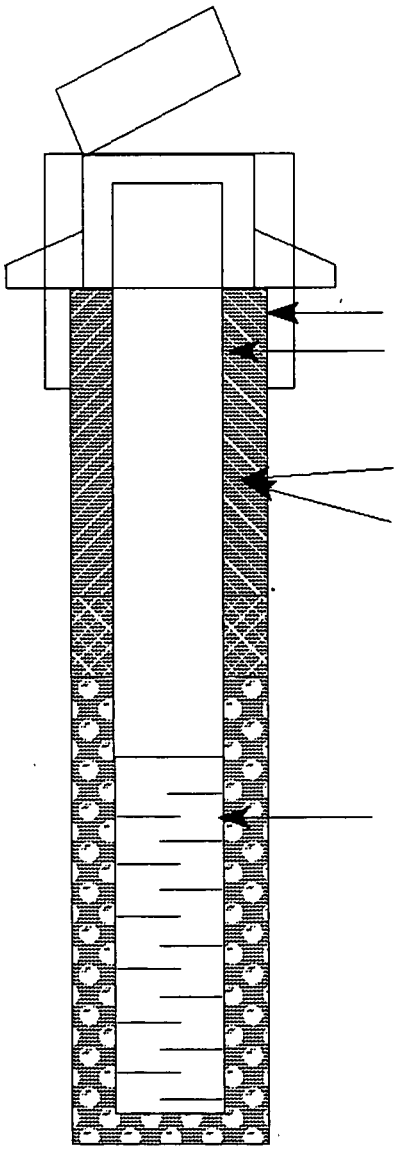

584.84 ft, Top of Casing (Protective pipe)
584.34 ft, Top of Well
582.89 ft, Concrete Elevation
582.39 ft, Ground Elevation
8.5 in, Boring Diameter
2 in, Casing Diameter
2.5 Bottom Protective Pipe
S. S. Casing Material
■ Grout
□ Other _____
5 ft, Top of Bentonite
7 ft, Bottom of Bentonite
9 ft, Top of Screen

Well Screen

2 in, Diameter
.01 in, Slot
10 Length (ft)
S. S. Material

19 ft, Bottom of Screen
20 ft, Bottom of Boring

Note: Elevations in feet above mean sea level.

TABLE C-23

MONITORING WELL INSTALLATION RECORD

PROJECT NAME: Fernald Environmental Management Project	**PROJECT LOCATION:** Fernald
BORING ID NO: 1952	**COUNTY:** Hamilton
PROJECT ID: 20.03.05	**STATE:** Ohio
DATE INSTALLED: 5-1-93	**CONTRACTOR:** Pennsylvania Drilling Co.
FIELD ENG./GEOL.: J. Reagan	**DRILLED BY:** NA
TYPE OF SEAL: Grout/Slurry	**DRILLING METHOD:** Hollow Stem Auger
DEVELOPEMENT METHOD: Surge-Bail	**TYPE OF BIT:** Auger
SURVEY DATUM	**SAND PACK TYPE:** 10/20 Silica
	WATER LEVEL/DATE: 579.31/5-19-93

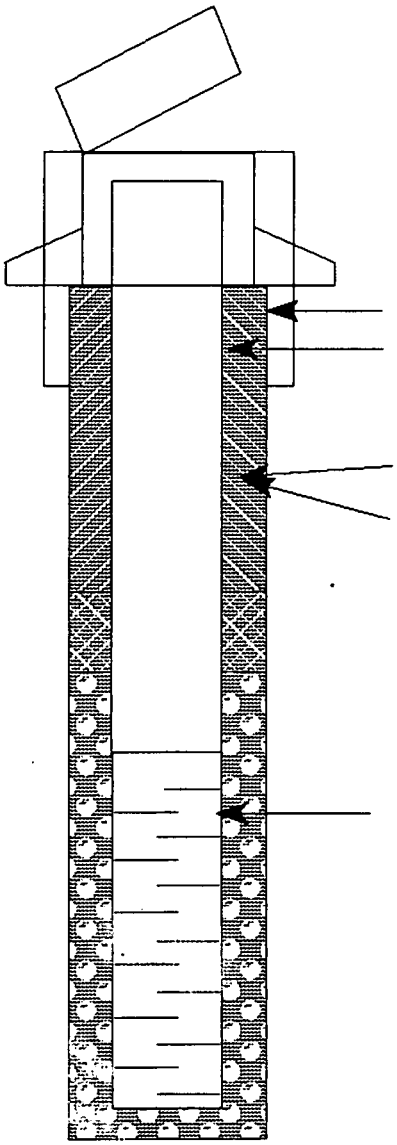

590.51 ft, Top of Casing (Protective pipe)
590.02 ft, Top of Well
588.51 ft, Concrete Elevation
588.01 ft, Ground Elevation
8.5 in, Boring Diameter
2 in, Casing Diameter
2.5 Bottom Protective Pipe
S. S. Casing Material
■ Grout
□ Other _____
1 ft, Top of Bentonite
5.5 ft, Bottom of Bentonite
8 ft, Top of Screen

Well Screen

2 in, Diameter
.01 in, Slot
10 Length (ft)
S. S. Material
18 ft, Bottom of Screen
20 ft, Bottom of Boring

Note: Elevations in feet above mean sea level.

TABLE C-23

MONITORING WELL INSTALLATION RECORD

PROJECT NAME: Fernald Environmental Management Project	**PROJECT LOCATION:** Fernald
BORING ID NO: 2947	**COUNTY:** Hamilton
PROJECT ID: 20.03.05	**STATE:** Ohio
DATE INSTALLED: April 18, 1993	**CONTRACTOR:** Pennsylvania Drilling Co.
FIELD ENG./GEOL.: P. McCarren	**DRILLED BY:** Craig Coulter
TYPE OF SEAL: Volclay Grout	**DRILLING METHOD:** Cable Tool
DEVELOPEMENT METHOD: Bail-Surge-Bail	**TYPE OF BIT:** Hammer Percussion
SURVEY DATUM	**SAND PACK TYPE:** 10/20 Silica
	WATER LEVEL/DATE: 522.31/5-7-93

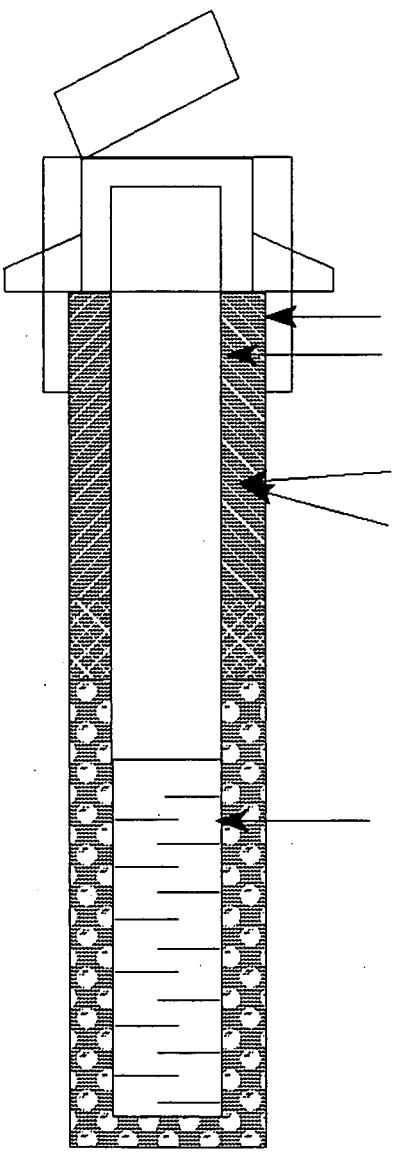

592.11 ft, Top of Casing (Protective pipe)
591.78 ft, Top of Well
NA ft, Concrete Elevation
589.8 ft, Ground Elevation
8 in, Boring Diameter
4 in, Casing Diameter
2.5 Bottom Protective Pipe
S. S. Casing Material
■ Grout
□ Other _____
1 ft, Top of Bentonite
53 ft, Bottom of Bentonite
63 ft, Top of Screen
Well Screen
4 in, Diameter
.02 in, Slot
15 Length (ft)
S. S. Material
78 ft, Bottom of Screen
85 ft, Bottom of Boring

Note: Elevations in feet above mean sea level.

TABLE C-23

MONITORING WELL INSTALLATION RECORD

PROJECT NAME: Fernald Environmental Management Project	**PROJECT LOCATION:** Fernald
BORING ID NO: 2949	**COUNTY:** Hamilton
PROJECT ID: 20.03.05	**STATE:** Ohio
DATE INSTALLED: 4-9-93	**CONTRACTOR:** Pennsylvania Drilling Co.
FIELD ENG./GEOL.: K. Payne	**DRILLED BY:** NA
TYPE OF SEAL: Grout/Slurry	**DRILLING METHOD:** Cable Tool
DEVELOPEMENT METHOD: Bail-Surge-Bail	**TYPE OF BIT:** Hammer Percussion Bit
SURVEY DATUM	**SAND PACK TYPE:** 10/20 Silica
	WATER LEVEL/DATE: 522.28/5-7-93

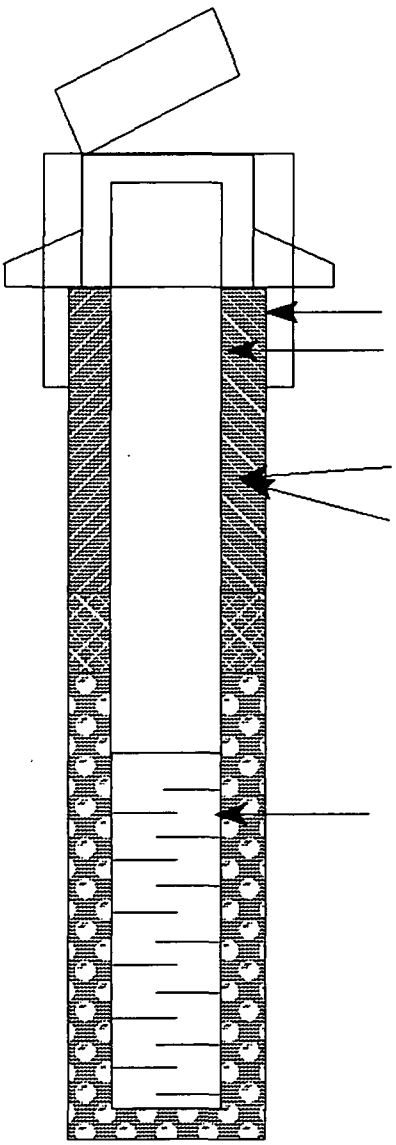

586.26 ft, Top of Casing (Protective pipe)
585.5 ft, Top of Well
NA ft, Concrete Elevation
583.8 ft, Ground Elevation
10 3/8 in, Boring Diameter
4 in, Casing Diameter
2.5 Bottom Protective Pipe
S. S. Casing Material
■ Grout
□ Other _____
.7 ft, Top of Bentonite
50 ft, Bottom of Bentonite
60 ft, Top of Screen
Well Screen
4 in, Diameter
.02 in, Slot
15 Length (ft)
S. S. Material
75 ft, Bottom of Screen
79 ft, Bottom of Boring

Note: Elevations in feet above mean sea level.

TABLE C-23

MONITORING WELL INSTALLATION RECORD

PROJECT NAME: Fernald Environmental Management Project	**PROJECT LOCATION:** Fernald
BORING ID NO: 2951	**COUNTY:** Hamilton
PROJECT ID: 20.03.05	**STATE:** Ohio
DATE INSTALLED: April 24, 1993	**CONTRACTOR:** Pennsylvania Drilling
FIELD ENG./GEOL.: K. Payne	**DRILLED BY:** Bob Johnson, Lonnie McGloklin
TYPE OF SEAL: Grout/Slurry	**DRILLING METHOD:** Cable Tool
DEVELOPEMENT METHOD: Bail-Surge-Bail	**TYPE OF BIT:** Hammer Percussion Bit
SURVEY DATUM	**SAND PACK TYPE:** 10/20 Silica
	WATER LEVEL/DATE: 521.83/5-7-93

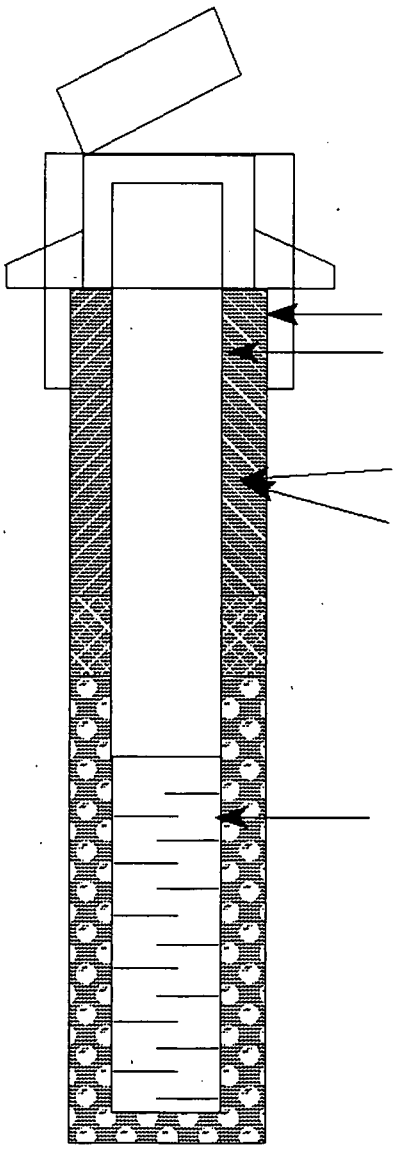

583.8 ft, Top of Casing (Protective pipe)
583.36 ft, Top of Well
_____ ft, Concrete Elevation
581.4 ft, Ground Elevation
10 3/8 in, Boring Diameter
4 in, Casing Diameter
2.5 Bottom Protective Pipe
S. S. Casing Material
■ Grout
□ Other _____
.8 ft, Top of Bentonite
45 ft, Bottom of Bentonite
55 ft, Top of Screen
Well Screen
4 in, Diameter
.01 in, Slot
15 Length (ft)
S. S. Material
70 ft, Bottom of Screen
75 ft, Bottom of Boring

Note: Elevations in feet above mean sea level.

TABLE C-23

MONITORING WELL INSTALLATION RECORD

PROJECT NAME: Fernald Environmental Management Project	**PROJECT LOCATION:** Fernald
BORING ID NO: 2953	**COUNTY:** Hamilton
PROJECT ID: 20.03.05	**STATE:** Ohio
DATE INSTALLED: June 6, 1993	**CONTRACTOR:** Pennsylvania Drilling
FIELD ENG./GEOL.: Keith Payne	**DRILLED BY:** Bob Johnson, John Vandine
TYPE OF SEAL: Grout/Slurry	**DRILLING METHOD:** Cable Tool
DEVELOPEMENT METHOD: Bail-Surge-Bail	**TYPE OF BIT:** Hammer Percussion Bit
SURVEY DATUM	**SAND PACK TYPE:** 10/20 Silica
	WATER LEVEL/DATE: 522.10/8-2-93

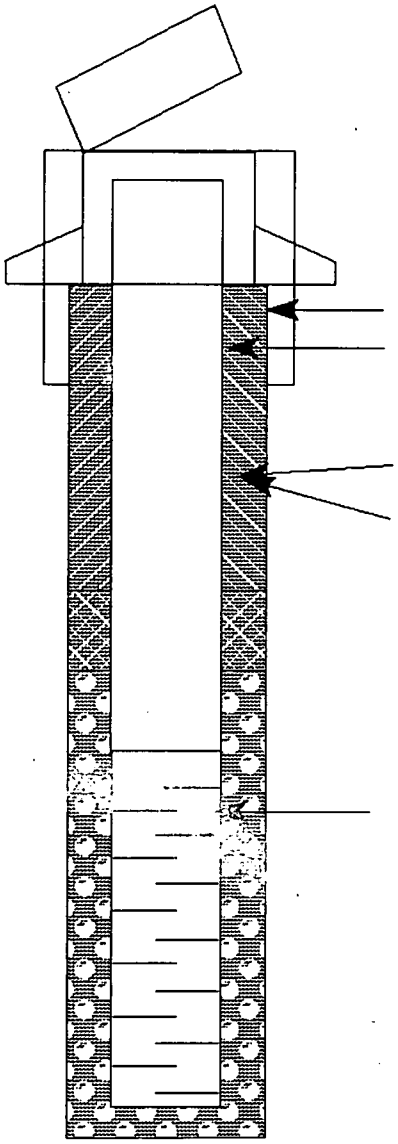

578.77 ft, Top of Casing (Protective pipe)
588.55 ft, Top of Well
NA ft, Concrete Elevation
586.6 ft, Ground Elevation
10 3/8 in, Boring Diameter
4 in, Casing Diameter
2.5 Bottom Protective Pipe
S. S. Casing Material
■ Grout
□ Other _____
.8 ft, Top of Bentonite
49.8 ft, Bottom of Bentonite
60 ft, Top of Screen
Well Screen
4 in, Diameter
.01 in, Slot
15 Length (ft)
S. S. Material
75 ft, Bottom of Screen
80 ft, Bottom of Boring

Note: Elevations in feet above mean sea level.

TABLE C-24

TABLE C-24A

SOLID WASTE LANDFILL
GROUNDWATER ELEVATION DATA[a], 1988 - 1992
OPERABLE UNIT 2 REMEDIAL INVESTIGATION
FERNALD ENVIRONMENTAL MANAGEMENT PROJECT

Year	Well No.	January	February	March	April	May	June	July	August	September	October	November	December
1988	1035	NMT[b]	NMT	NMT	NMT	578.39	577.46	576.09	576.95	576.58	575.91	576.46	577.62
1988	1038	NMT	NMT	568.98	569.21	569.09	569.19	568.94	569.06	568.80	568.73	568.82	568.78
1988	2027	519.21	519.51	520.09	520.68	521.05	521.07	520.27	520.03	518.89	518.64	517.95	518.12
1988	2037	NMT	NMT	519.76	NMT	520.66	520.67	519.94	519.20	518.42	518.22	517.49	517.66
1988	2052	DRY	518.94	519.01	519.01	DRY	518.80	518.81	519.16	518.51	518.15	517.24	517.31
1989	1035	579.44	578.64	580.15	578.75	579.02	578.56	577.91	NMT	NMT	577.70	579.08	576.47
1989	1038	568.42	567.27	566.84	568.62	568.68	568.74	568.87	567.82	569.30	569.46	569.73	569.54
1989	2027	517.75	518.35	519.22	520.39	521.87	523.11	523.53	523.00	522.34	520.33	521.24	521.42
1989	2037	517.22	517.84	518.76	519.98	521.59	522.93	523.23	522.74	522.01	521.59	521.16	521.00
1989	2052	516.78	517.47	518.21	519.71	521.59	523.11	523.46	522.91	522.03	520.26	521.01	520.68
1990	1035	579.46	580.67	NMT	578.64	579.03	578.19	578.41	577.73	578.55	578.13	578.38	578.97
1990	1038	569.91	567.50	NMT	569.91	569.86	553.44	570.17	569.71	570.23	569.72	569.79	570.73
1990	2027	521.11	521.57	NMT	523.05	523.50	524.47	524.05	523.87	523.19	523.01	523.05	523.03
1990	2037	520.58	521.06	NMT	522.70	523.14	524.12	523.64	523.49	522.00	522.42	522.57	522.49
1990	2052	520.42	520.14	NMT	522.66	523.04	524.17	523.65	523.62	523.01	522.21	522.49	522.71
1991	1035	578.96	578.85	NMT	NMT	NMT	577.88	NMT	NMT	577.17	576.62	576.88	577.99
1991	1038	570.53	569.87	NMT	NMT	NMT	570.19	570.03	570.39	570.37	570.51	570.10	570.35
1991	2027	524.36	524.77	NMT	NMT	NMT	524.98	523.55	522.72	521.87	521.39	520.61	519.75
1991	2037	524.05	524.48	NMT	NMT	NMT	524.04	NMT	522.18	521.29	520.82	519.97	519.16
1991	2052	523.47	524.68	524.85	NMT	NMT	524.43	523.05	522.16	521.60	520.69	520.20	519.07
1992	1035	579.27	578.61	578.27	578.41	NMT	NMT	NMT	NMT	576.92	577.75	578.35	578.29
1992	1038	570.60	570.51	570.01	570.96	NMT	570.38	570.10	570.39	570.79	570.44	570.41	570.25

See footnotes at end of table.

FER\CRU2RI\TLC\APP-C\TABC-24A\January 6, 1995 8:58am

000618

6508

TABLE C-24A
(Continued)

Year	Well No.	January	February	March	April	May	June	July	August	September	October	November	December
MISCELLANEOUS GROUNDWATER ELEVATION DATA													
1992	2027	519.59	NMT	518.92	519.18	NMT	519.57	519.67	520.06	520.24	519.62	519.90	520.05
1992	2037	519.00	518.98	518.58	518.64	NMT	519.00	519.34	519.82	520.03	519.40	519.65	520.03
1992	2052	518.90	525.49	518.32	518.07	NMT	519.02	519.20	519.64	519.67	519.35	519.39	519.32
1988	1025	NMT	569.82	570.33	570.04	561.54	568.34	570.85	571.07	571.16	570.88	570.75	570.63
1988	1064	NMT	NMT	NMT	NMT	NMT	NMT	NMT	NMT	NMT	NMT	NMT	559.92
1988	1080	NMT	NMT	NMT	NMT	560.15	567.24	567.55	560.89	567.71	567.83	567.73	568.18
1988	1081	575.10	575.95	576.69	576.89	575.49	575.35	575.05	575.04	574.95	574.71	574.68	575.05
1988	2068	517.88	518.34	519.34	520.10	520.17	519.75	518.81	518.17	517.52	517.13	516.50	516.58
1989	1025	570.34	563.52	570.48	569.89	571.37	571.73	571.75	571.95	DRY	570.27	571.62	570.84
1989	1064	566.90	577.59	577.35	577.55	577.06	574.76	573.94	NMT	573.44	571.12	573.28	572.46
1989	1080	568.61	568.40	567.77	NMT	568.95	568.74	568.06	568.05	566.85	566.62	568.66	NMT
1989	1081	575.73	575.87	576.69	576.65	576.72	575.25	575.64	570.27	575.51	575.35	575.53	575.10
1989	2068	516.43	517.38	518.45	520.65	522.20	523.52	522.80	521.94	521.14	519.17	519.98	519.75
1989	2106	NMT	518.78	520.45	522.23	523.09	523.43	522.40	521.51	NMT	519.07	520.35	519.97
1990	1025	570.63	NMT	NMT	570.95	570.38	571.63	571.84	567.72	572.08	572.27	569.76	571.57
1990	1064	573.71	576.65	NMT	575.50	575.41	574.95	NMT	573.03	572.98	565.36	574.30	576.57
1990	1080	567.98	568.72	NMT	568.72	564.65	568.64	NMT	568.37	568.69	567.36	NMT	569.46
1990	1081	575.63	563.32	NMT	576.00	577.49	576.13	576.07	575.79	575.71	577.05	575.75	NMT
1990	2068	519.49	520.14	NMT	522.23	522.74	523.68	523.02	522.66	521.59	521.59	521.85	521.85
1990	2106	520.57	521.75	522.81	523.05	524.29	523.65	523.20	522.32	521.84	522.66	522.35	522.62
1990	2385	NMT	NMT	NMT	NMT	524.11	519.57	523.73	523.07	522.22	522.46	522.73	522.83
1990	2397	NMT	NMT	NMT	NMT	NMT	NMT	NMT	522.61	521.93	521.99	521.99	522.21
1991	1025	571.37	566.77	NMT	NMT	NMT	570.50	571.58	571.89	NMT	572.11	572.19	571.59

See footnotes at end of table.

TABLE C-24A
(Continued)

Year	Well No.	January	February	March	April	May	June	July	August	September	October	November	December
MISCELLANEOUS GROUNDWATER ELEVATION DATA (continued)													
1991	1032	NMT	NMT	NMT	NMT	NMT	NMT	NMT	NMT	NMT	559.11	559.10	559.49
1991	1064	579.80	579.37	579.57	NMT	NMT	575.18	NMT	573.24	NMT	NMT	NMT	NMT
1991	1080	569.21	568.91	NMT	NMT	NMT	565.70	564.22	NMT	NMT	NMT	NMT	NMT
1991	1081	NMT	NMT	NMT	NMT	NMT	576.54	NMT	NMT	NMT	NMT	NMT	NMT
1991	1907	NMT	NMT	NMT	NMT	NMT	NMT	DRY	NMT	NMT	NMT	NMT	NMT
1991	2068	524.12	524.08	524.14	NMT	NMT	523.41	521.98	520.74	NMT	519.36	518.68	517.85
1991	2106	524.05	522.99	524.35	NMT	NMT	523.34	NMT	521.21	520.90	NMT	NMT	NMT
1991	2385	524.71	524.10	524.73	NMT	524.34	NMT	522.45	521.71	521.28	520.40	519.74	519.00
1991	2397	524.46	524.38	524.26	NMT	NMT	523.38	521.97	521.20	520.62	519.79	519.08	518.27
1992	1025	572.19	568.27	NMT	NMT	NMT	570.89	565.54	572.03	572.39	571.88	571.64	571.29
1992	1032	561.02	559.05	559.09	559.50	NMT	560.49	561.05	559.17	559.46	560.17	560.88	559.16
1992	2068	517.60	517.60	517.44	517.56	NMT	517.29	518.63	519.52	519.07	518.71	518.68	519.37
1992	2385	518.98	519.05	518.89	519.23	NMT	519.20	NMT	519.91	519.87	519.47	519.49	520.25
1992	2397	517.99	518.07	517.95	518.18	NMT	518.63	518.91	NMT	519.33	519.01	519.00	519.63

[a]Feet above Mean Sea Level

[b]No measurement taken

000620

6508

TABLE C-24B

SOLID WASTE LANDFILL
GROUNDWATER ELEVATION DATA[a], 1993
PHASE II FIELD INVESTIGATION
OPERABLE UNIT 2 REMEDIAL INVESTIGATION
FERNALD ENVIRONMENTAL MANAGEMENT PROJECT

Well ID	3/18/93	3/23/93	4/09/93	4/19/93	5/07/93	5/19/93	6/02/93	6/21/93	7/08/93	7/19/93	8/02/93	8/16/93
1035	578.49	579.05	578.43	578.54	578.87	578.17	576.68	577.82	577.43	577.18	576.37	576.56
1038	570.34	570.70	570.95	567.87	568.01	569.83	570.34	570.49	570.43	570.59	570.74	570.64
1719	579.30	579.38	579.50	579.52	576.73	579.30	NMT[b]	577.12	577.42	575.38	576.08	576.47
1947	NMT	NMT	NMT	NMT	580.40	NMT	580.69	580.69	580.53	580.31	580.20	580.08
1950	NMT	NMT	NMT	NMT	573.95	578.79	578.39	575.19	577.47	577.10	576.62	576.03
1952	NMT	NMT	NMT	NMT	NMT	579.31	NMT	579.24	579.15	579.14	579.13	579.12
2027	520.90	521.80	522.15	522.13	522.09	522.65	522.45	522.50	522.53	522.22	522.14	585.90
2037	520.68	NMT	521.78	521.86	521.96	522.00	522.29	522.32	522.03	521.76	521.93	521.59
2052	520.62	NMT	521.80	521.83	522.00	522.13	522.20	522.28	521.93	521.95	521.83	521.56
2947	NMT	NMT	NMT	NMT	522.31	NMT	NMT	522.29	522.10	521.89	522.00	521.56
2949	NMT	NMT	NMT	NMT	522.28	522.38	522.51	522.41	522.28	522.07	522.18	521.77
2951	NMT	NMT	NMT	NMT	521.83	NMT	522.17	522.20	521.92	521.92	521.83	521.45
2953	NMT	NMT	NMT	NMT	NMT	NMT	NMT	NMT	NMT	NMT	522.10	521.72

[a]Feet above Mean Sea Level

[b]NMT = No measurement taken

000121

Appendix D
Lime Sludge Ponds

TABLE OF CONTENTS/LIST OF TABLES AND FIGURES
APPENDIX D - LIME SLUDGE PONDS

Table	Title	Page
D-1A	Lime Sludge Ponds Summary of RI/FS Sample Collection Activities Phase I Field Investigation	D-1-1
D-1B	North Lime Sludge Pond Summary of RCRA Facility Assessment Sample Activities	D-1-4
D-1C	Lime Sludge Ponds Summary of RI/FS Sample Collection Activities Phase II Field Investigation	D-1-6
D-2A	Lime Sludge Ponds Concentrations of Detected Analytes Above Background in Surface Soil Phase II Investigation	D-2-1
D-2B	Lime Sludge Ponds Concentrations of Detected Analytes Above Background in Subsurface Soil Phase I Investigation	D-2-10
D-2C	Lime Sludge Ponds Concentrations of Detected Analytes Above Background in Subsurface Soil Phase II Investigation	D-2-12
D-2D	Lime Sludge Ponds Concentrations of Detected Analytes Above Background in Surface Water Phase I Field Investigation	D-2-24
D-2E	Lime Sludge Ponds Concentrations of Detected Analytes Above Background in Surface Water Phase II Field Investigation	D-2-27
D-2F	Lime Sludge Ponds Concentrations of Detected Analytes Above Background in Groundwater 1000 Series Phase I Field Investigation	D-2-29
D-2G	Lime Sludge Ponds Concentrations of Detected Analytes Above Background in Groundwater 1000 Series Phase II Investigation	D-2-32
D-2H	Lime Sludge Ponds Concentrations of Detected Analytes Above Background in Groundwater Great Miami Aquifer - Phase I Field Investigation	D-2-37
D-2I	Lime Sludge Ponds Concentrations of Detected Analytes Above Background in Groundwater Great Miami Aquifer - Phase II Field Investigation	D-2-39
D-3A	Lime Sludge Ponds RI/FS Surface Soil Results	D-3-1
D-3B	Lime Sludge Ponds Tentatively Identified Compounds Surface Soil	D-3-26

TABLE OF CONTENTS
(Continued)

Table	Title	Page
D-4	Lime Sludge Ponds CIS Surface Soil Radiological Results	D-4-1
D-5	Lime Sludge Ponds Surface Media Analyses Environmental Survey	D-5-1
D-6A	Lime Sludge Ponds RI/FS Subsurface Soil Results	D-6-1
D-6B	Lime Sludge Ponds Tentatively Identified Compounds Sludge and Subsurface Soil	D-6-70
D-7A	Lime Sludge Ponds CIS Subsurface Soil Results Analysis of Composite Samples	D-7-1
D-7B	Lime Sludge Ponds CIS Subsurface Soil Results, Non-Radiological Data	D-7-3
D-8	North Lime Sludge Pond Subsurface Media Analysis RCRA Facility Assessment	D-8-1
D-9	Lime Sludge Ponds RI/FS Surface Water Results	D-9-1
D-10	North Lime Sludge Pond Surface Water Analysis RCRA Facility Assessment	D-10-1
D-11A	Lime Sludge Ponds RI/FS Groundwater Results	D-11-1
D-11B	Lime Sludge Ponds Tentatively Identified Compounds Water	D-11-84
D-12	Lime Sludge Ponds RI/FS TCLP Results	D-12-1
D-13	Lime Sludge Ponds CIS RCRA Hazardous Characteristics and EP-Toxicity Results	D-13-1
D-14	Lime Sludge Ponds RI/FS Quality Control Samples	D-14-1
D-15	Lime Sludge Ponds On-Site Laboratory Screening Results Phase II Field Investigation	D-15-1
D-16A	Lime Sludge Ponds CIS Surface Soil On-site Analytical Data	D-16-1
D-16B	Lime Sludge Ponds FEMP Laboratory Screening Data Results Activity Concentrations of CIS Profile Samples	D-16-8
D-16C	Lime Sludge Ponds CIS Fidler Surface Readings	D-16-11

TABLE OF CONTENTS
(Continued)

Table	Title	Page
D-16D	Lime Sludge Ponds CIS Exposure Rate Measurements	D-16-19
D-16E	Lime Sludge Ponds CIS Beta Gamma Dose Rate Measurements	D-16-20
D-17A	Lime Sludge Ponds Geotechnical Analysis Phase I Field Investigation	D-17-1
D-17B	Lime Sludge Ponds Geotechnical Analysis Phase II Field Investigation	D-17-2
D-17C	Lime Sludge Ponds Sieve Analysis ASTM D 422 Phase II Field Investigation	D-17-4
D-17D	Lime Sludge Ponds Hydrometer Analysis ASTM D 422 Phase II Remedial Investigation	D-17-5
D-18A	Lime Sludge Ponds CIS Geophysical Analysis Total Magnetic Intensity Readings	D-18-1
D-18B	Lime Sludge Ponds CIS Geophysical Analysis EM 31 Readings	D-18-4
D-19A	Lime Sludge Ponds Boring Logs	D-19-1
D-19B	K-65/Lime Sludge Ponds Trenching Logs	D-19-37
D-20	Monitoring Well Installation Records	D-20-1
D-21A	Lime Sludge Ponds Groundwater Elevation Data, 1988-1992	D-21-1
D-21B	Lime Sludge Ponds Groundwater Elevation Data, 1993	D-21-5

Figure	Title	Page
D-16A	Lime Sludge Ponds CIS Fidler Measurement Contours	D-16-21
D-16B	Lime Sludge Ponds CIS Exposure Rate Contours	D-16-22
D-16C	Lime Sludge Ponds CIS Beta Gamma Dose Rate Contours	D-16-23
D-17A	Lime Sludge Ponds Unconfined Compressive Strength Results - ASTM D 1266 Location 1934 2.0 to 4.0 feet	D-17-9

TABLE OF CONTENTS
(Continued)

Figure	Title	Page
D-17B	Lime Sludge Ponds Unconfined Compressive Strength Results - ASTM D 1266 Location 1948 2.0 to 4.0 feet	D-17-10
D-17C	Lime Sludge Ponds Unconfined Compressive Strength Results - ASTM D 1266 Location 2936 2.0 to 4.0 feet	D-17-11
D-18A	Lime Sludge Ponds CIS Geophysical Analysis Total Magnetic Intensity Contours	D-18-6
D-18B	Lime Sludge Ponds CIS Geophysical Analysis EM 31 Horizontal Dipole Apparent Conductivity Map	D-18-7
D-18C	Lime Sludge Ponds CIS Geophysical Analysis EM 31 Vertical Dipole Apparent Conductivity Map	D-18-8
D-18D	Lime Sludge Ponds CIS Geophysical Analysis Ground Penetrating Radar Results	D-18-9

KEY TO DATA TABLES

FLTD Filtered Status of the Sample (applies to water samples)

FILT	Filtered sample; filtered status identified on Request for Analysis/Chain of Custody
UNFI	Unfiltered sample; filtered status identified on Request for Analysis/Chain of Custody
*F	Filtered sample; filtered status not identified on Request for Analysis/Chain of Custody; determination based upon other field investigation documentation.
*U	Unfiltered sample; filtered status not identified on Request for Analysis/Chain of Custody; determination based upon other field investigation documentation.
UNKN	Unknown; filtered status could not be determined.

L Analytical Support Level (ASL)

The analytical support level for sample analyses and data validation, defined as follows:

A	*Qualitative Field Analysis* - Analogous to EPA analytical level 1.
B	*Qualitative, Semi-Quantitative, and Quantitative Analyses* - Analogous to EPA analytical level 2.
C	*Quantitative with fully defined QA/QC* - Laboratory analyses generated with full QA/QC checks of types and frequencies specified for ASL D according to FEMP-specified analytical protocols for radiological and nonradiological parameters. The analytical methods are identical to ASL D for QA/QC sample analysis and method performance criteria. However, the data package does not typically contain raw instrument output but does include summaries of QA/QC sample results. Laboratories are required to retain, in the project file, raw instrument data to upgrade ASL C reports to ASL D. Analogous to EPA analytical level 3.
D	*Confirmational with complete QA/QC and reporting* - Provides data generated with a full complement of QA/QC checks of specified types and frequencies according to FEMP-specified analytical protocols for radiological and nonradiological parameters. Analogous to EPA analytical level 4.
E	*Nonstandard* - Analyses by nonstandard protocols that often require method development or validation. Analogous to EPA analytical level 5.
NOTE:	The number 3 is sometimes used to indicate ASL C. Likewise, the numbers 4 and 5 are sometimes used to indicate ASLs D and E, respectively.

VQ Data Validation Qualifier

J	Analyte was analyzed for and positively identified, but the associated numerical value may not be consistent with the amount present in the environmental sample.

KEY TO DATA TABLES
(continued)

VQ Data Validation Qualifier (continued)

N	Analysis indicates that an analyte is present and there are strong indications that the identity is correct.
R	Data are unusable for any purpose. Analyte was analyzed for, but the presence or absence of the analyte was not verified.
U	Analyte was analyzed for and was not present above the level of the associated value. Associated numerical value indicates the approximate concentration necessary to detect the analyte in the sample.
UJ	This is a combination of the U and J qualifiers. Analyte was analyzed for and was not present above the level of the associated value. The associated value may not accurately or precisely represent the concentration necessary to detect the analyte in the sample.
–	No data validation qualifier assigned.

6508

TABLE D-1

TABLE D-1A

LIME SLUDGE PONDS
SUMMARY OF RI/FS SAMPLE COLLECTION ACTIVITIES
PHASE I FIELD INVESTIGATION
OPERABLE UNIT 2 REMEDIAL INVESTIGATION
FERNALD ENVIRONMENTAL MANAGEMENT PROJECT

Location	Sample No.	Date Collected	Radionuclides	Herbicide Organics	Dioxins/ Furans	Pest/ PCB[a]	VOC[b]	SVOC[c]	General Chemistry	Metals	TCLP[d]
SURFACE WATER											
North Pond	067500	8/29/91	X[e]	X	-[f]	X	X	X	X	X	-
	067008	5/14/91	X	-	-	X	X	X	X	X	-
	067900	11/6/91	-	X	-	X	X	X	-	X	-
	067907	11/7/91	-	-	-	-	-	-	-	X	-
GROUNDWATER SAMPLES											
1039	003179	5/11/88	X	-	-	-	-	-	X	X	-
	003491	8/10/88	X	-	-	-	-	-	X	X	-
	003733	11/20/88	X	-	-	-	-	-	X	X	-
	003928	2/5/89	X	-	-	-	-	-	X	X	-
1041	003180	5/11/88	X	-	-	-	-	-	X	X	-
	003490	8/10/88	X	-	-	-	-	-	X	X	-
	003732	11/17/88	X	-	-	-	-	-	X	X	-
	003924	3/1/89	X	-	-	-	-	-	X	X	-
1042	003182	5/11/88	X	-	-	-	-	-	X	X	-
	003416	8/9/88	X	-	-	-	-	-	X	X	-
	003723	11/17/88	X	-	-	-	-	-	X	X	-
	003922	3/1/89	X	-	-	-	-	-	X	X	-
1134	045426	10/18/89	Total Uranium only	-	-	-	-	-	-	-	-
	045427	10/18/89	-	-	-	-	-	-	nitrate only	-	-
	045428	1/31/90	-	-	-	-	-	-	nitrate only	-	-

See footnotes at end of table

FER\CRU2RI\JLG\TABD-1A\January 6, 1995 10:15am

000328

6508

TABLE D-1A
(Continued)

Location	Sample No.	Date Collected	Radionuclides	Herbicide Organics	Dioxins/ Furans	Pest/ PCB[a]	VOC[b]	SVOC[c]	General Chemistry	Metals	TCLP[d]
GROUNDWATER SAMPLES (Continued)											
1210	045738	10/22/89	-	-	-	-	-	-	nitrate only	-	-
	045739	10/22/89	Total Uranium only	-	-	-	-	-	-	-	-
	045740	7/2/90	-	-	-	-	-	-	nitrate only	-	-
1229	045780	10/23/89	Total Uranium only	-	-	-	-	-	-	-	-
	045781	10/23/89	-	-	-	-	-	-	nitrate only	-	-
	045782	6/30/90	-	-	-	-	-	-	nitrate only	-	-
2042	003150	5/4/88	X	-	-	X	X	X	X	X	-
	003415	8/9/88	X	-	-	-	-	X	X	X	-
	003722	11/17/88	X	-	-	-	-	-	X	X	-
	003921	3/1/89	X	-	-	-	-	-	X	X	-
	004036 (duplicate of 003921)	3/1/89	X	-	-	-	-	-	X	X	-
	066845	1/5/90	X	-	-	-	-	-	-	-	-
4101	003031	12/4/87	-	X	X	X	-	X	X	X	-
	003207	5/19/88	X	-	-	-	-	-	X	X	-
	003208 (duplicate of 003207)	5/19/88	X	-	-	-	-	-	X	X	-
	003409	8/8/88	X	-	-	-	-	-	X	X	-
	003410 (duplicate of 003409)	8/8/88	X	-	-	-	-	-	X	X	-
	003719	11/18/88	X	-	-	-	-	-	X	X	-
	003918	3/15/89	X	-	-	X	X	X	X	X	-
	066736	12/7/89	X	-	-	-	-	-	-	-	-
	066737	12/7/89	-	-	-	-	X	-	X	X	-

See footnotes at end of table .

FER\CRU2RI\ULG\TABD-1A\January 6, 1995 10:15am

000029

TABLE D-1A
(Continued)

Location	Sample No.	Date Collected	Radionuclides	Herbicide Organics	Dioxins/ Furans	Pest/ PCB[a]	VOC[b]	SVOC[c]	General Chemistry	Metals	TCLP[d]
GROUNDWATER SAMPLES (Continued)											
4102	003205	5/19/88	X	-	-	-	-	-	X	X	-
	003206 (duplicate of 003205)	5/19/88	X	-	-	-	-	-	X	X	-
	003412	8/8/88	X	-	-	-	-	-	X	X	-
	003413 (duplicate of 003412)	8/8/88	X	-	-	-	-	-	X	X	-
	003720	11/18/88	X	-	-	-	-	-	X	X	-
	003919	2/23/89	X	-	-	-	-	-	X	X	-
	066738	12/7/89	X	-	-	-	-	-	-	-	-
	066739	12/7/89	-	-	-	-	X	-	X	X	-

Location	Sample No.	Sample Interval (ft)[g]	Radionuclides	Herbicide Organics	Dioxins/ Furans	Pest/ PCB[a]	VOC[b]	SVOC[c]	General Chemistry	Metals	TCLP[d]
SUBSURFACE SAMPLES											
1039	008439	12.0-13.5	X	-	-	-	-	-	-	-	-
1041	008448	0.0-1.5	X	-	-	-	-	-	-	-	-
1716	067904	0.0-2.0	X	X	X	X	X	X	sulfide only	X	-
	067007	1.5-2.0	-	-	-	-	-	-	-	-	X
1717	067902	0.0-2.0	X	X	X	X	X	X	sulfide only	X	-
	067003	1.5-2.0	-	-	-	-	-	-	-	-	X
2042	008869	3.0-4.5	X	-	-	-	-	-	-	-	-
	008509	45.0-46.5	X	-	-	-	-	-	-	-	-

[a]Pest/PCB = Pesticide/Polychlorinated Biphenyl
[b]VOC = Volatile Organic Compound
[c]SVOC = Semivolatile Organic Compound
[d]TCLP = Toxicity Characteristic Leaching Procedure
[e]X = Sample analyzed for parameter indicated
[f]Sample not analyzed for this parameter
[g]Sample interval is depth, in feet, below the ground surface.

FER\CRU2RI\JLG\TABD-1A\January 6, 1995 10:15am

000630

TABLE D-1B

NORTH LIME SLUDGE POND
SUMMARY OF RCRA FACILITY ASSESSMENT SAMPLE ACTIVITIES
OPERABLE UNIT 2 REMEDIAL INVESTIGATION
FERNALD ENVIRONMENTAL MANAGEMENT PROJECT

Location	Sample No.	Sample Interval (ft)[a]	Total Volatiles	TCLP[b]
SURFACE WATER SAMPLES				
SP-4	911120-087	NA[c]	X[d]	X
SP-5	911120-088	NA	X	X
SP-6	911120-089	NA	X	metals and SVOCs[e] only
SUBSURFACE SAMPLES				
SP-EF-1-1	920407-198	0.0-3.0	X	X
SP-EF-2-1	920407-197	0.0-3.0	X	X
SP-EF-3-1	920407-199	0.0-1.0	X	X
SP-INF-1	920319-052	0.0-1.0	X	X
	920319-053	1.0-2.0	X	X
	920319-054	2.0-3.0	X	X
	920319-055	3.0-4.0	X	X
	920319-056	4.0-5.0	X	X
	920319-057	5.0-6.0	X	X
SP-INF-2	920319-058	0.0-1.0	X	X
	920319-059	1.0-2.0	X	X
	920319-060	1.0-2.0	X	X
SP-1	911122-005	0.0-1.0	X	X
SP-2	920323-085	2.0-3.0	X	X
	920323-086	3.0-4.0	-[f]	X
	920323-087	4.0-5.0	X	X

See footnotes at end of table

TABLE D-1B
(Continued)

Location	Sample No.	Sample Interval (ft)[a]	Total Volatiles	TCLP[b]
SUBSURFACE SAMPLES (continued)				
SP-3	920323-088	0.0-1.0	X	X
	920323-089	1.0-2.0	X	X
	920323-090	2.0-3.0	X	X
	920323-091	3.0-4.0	X	X
	920323-092	4.0-5.0	X	X
SP-3-1	911114-039	0.0-0.1	X	X
SP-4	920323-093	0.0-1.0	X	X
	920323-094	1.0-2.0	X	X
	920323-095	2.0-3.0	X	X
	920323-096	3.0-4.0	X	X
	920323-097	6.0-7.0	X	X
SP-10-1	920407-192	0.0-1.0	X	X
SP-10-2	920407-193	1.0-2.0	X	X
SP-10-2A	920407-194	1.0-2.0	X	X
SP-10-3	920407-195	2.0-3.0	X	X
SP-10-4	920407-196	3.0-4.0	X	X
SP-11	920211-237	0.0-7.0	X	X
SP-14	920211-239	0.0-10.0	X	X
	920211-236	0.0-10.0	X	X

[a]The sample interval is depth, in feet, below the ground surface.
[b]TCLP = Toxicity Characteristic Leaching Procedure
[c]NA = Not applicable
[d]X = Sample analyzed for parameter indicated
[e]SVOCs = Semivolatile Organic Compounds
[f]Sample not analyzed for parameter indicated

TABLE D-1C

LIME SLUDGE PONDS
SUMMARY OF RI/FS SAMPLE COLLECTION ACTIVITIES
PHASE II FIELD INVESTIGATION
OPERABLE UNIT 2 REMEDIAL INVESTIGATION
FERNALD INVIRONMENTAL MANAGEMENT PROJECT

Monitoring Well or Sample Location	Sample Numbers	Target Analyte List 20.03.05	
		Total Uranium Screening A	Full HSL, Gen. GW Qual., Full Rad. B
SURFACE WATER SAMPLES			
LSP-SW-01	114593		X
	114595[b] (duplicate of 114593)		X
	114596 (duplicate of 114597)	X	
	114597[b]	X	
K-65 Trench[b]	114770	X	
GROUNDWATER SAMPLES			
1039	111990		X
	111991	X	
1041	116220		X
	116221[b]		X[d]
	116329	X	
	116330[b]	X	
1042	110889		X
	110890	X	
1134		X	X
1176		X	X
1210		X	X
1229		X	X
1934	114620		X
	114621	X	
	114622[b] (duplicate of 114620)		X[h]
1937	114617		X[g,f]
	114618	X	
	114626		X[m], TOC
	114782[b]		X[h]

See footnotes at end of table

TABLE D-1C
(Continued)

Monitoring Well or Sample Location	Sample Numbers	Target Analyte List 20.03.05	
		Total Uranium Screening A	Full HSL, Gen. GW Qual., Full Rad. B
GROUNDWATER SAMPLES (Continued)			
1940	114786	X	
	114784		X
	114785[b]		X[h]
2042	110989		X
	110990[b]		X[d]
	110991	X	
	110992[b]	X	
	110994[b] (duplicate of 110989)		X
	110995[b] (duplicate of 110990)		X[d]
	110996[b] (duplicate of 110991)	X	
	110997[b] (duplicate of 110992)	X	
2935	114921		X
	114923	X	
2936	114788		X
	114789[b]		X[h]
	114791	X	
	114917[b] (duplicate of 114788)		X
	114918[b] (duplicate of 114789)		X[h]
	114920[b] (duplicate of 114791)	X	
2939	114924		X
	114926	X	

See footnotes at end of table

TABLE D-1C
(Continued)

Sample Location	Sample Number	Sample Interval (ft.)	Target Analyte List 20.03.05							
			Screening	Chem/Rad	RCRA/Geotechnical					
			A	C	D	E	F	G	H	J
SURFACE SAMPLES										
LSP-TR-01	114581[b]	0.0 - 0.5		X[p]						
	114584		X							
	114589			X						
LSP-TR-02	114585	0.0 - 0.5	X							
	114591			X						
LSP-SS-03	114467	0.0 - 0.5		X						
	114470		X							
LSP-SS-04	114474	0.0 - 0.5		X						
	114483		X							
LSP-SS-05	114485	0.0 - 0.5		X						
LSP-SS-06	114487	0.0 - 0.5		X						X
	114493				SA,HA,W					
LSP-SS-07	114477	0.0 - 0.5		X						
LSP-SS-08	114488	0.0 - 0.5		X						
LSP-SS-09	114598	0.0 - 0.5		X						
LSP-SS-10	114881	0.0 - 0.5		X						
LSP-SS-11	114498	0.0 - 0.5		X						
LSP-SS-12	114501	0.0 - 0.5		X						
LSP-SS-13	114514	0.0 - 0.5		X						
LSP-SS-14	114516	0.0 - 0.5		X						
SUBSURFACE SAMPLES										
LSP-SS-03	114469	0.5 - 1.0		X						
	114471		X							
LSP-SS-04	114476	0.5 - 1.0		X						
	114484		X							
LSP-SS-07	114479	0.5 - 1.0		X						
LSP-SS-08	114490	0.5 - 1.0		X						
LSP-SS-11	114500	0.5 -1.0		X						
LSP-SS-12	114503	0.5 - 1.0		X						

See footnotes at end of table

TABLE D-1C
(Continued)

Sample Location	Sample Number	Sample Interval (ft.)	Target Analyte List 20.03.05							
			Screening	Chem/Rad	RCRA/Geotechnical					
			A	C	D	E	F	G	H	J
SUBSURFACE SAMPLES (Continued)										
LSP-SB-01	114564	0.5 - 1.0		X						
	114565		X							
	114567	1.0 - 3.0			TOC					
	114568				X[g]					
LSP-SB-02	114508	0.5 - 1.0		X						
	114513		X							
LSP-SB-03	114510	0.5 - 1.0		X						
LSP-SB-04	114868[b]	0.5 - 1.0		X[k]						
	114570			X						
	114573		X							
	114572	1.0 - 3.0			TOC					
	114574				X[g]					
LSP-SB-05	114603	0.5 - 1.0	X							
	114600			X						
LSP-SB-06	114602	0.5 - 1.0		X						
LSP-SB-07	114576	0.5 - 1.0		X						
	114578	1.0 - 3.0			TOC	X				
	114575				X[g]					
K-65 Trench 30'	114767	0.0 - 6.0		X						
K-65 Trench 168'	114774	0.0-2.0	X[i]							
K-65 Trench 225'-234'	114776	0.0 - 6.0		X						
	114777		X[l]							
1934	114540	2.0 - 4.0						UC		X
	111182	4.0 - 6.0	X							
	111183				TOC					
	111184				X[g]					
1937	111141	2.0 - 4.0			X[g]					
	111142		X							
	111143				TOC					

See footnotes at end of table

TABLE D-1C
(Continued)

Sample Location	Sample Number	Sample Interval (ft.)	Target Analyte List 20.03.05							
			Screening	Chem/Rad	RCRA/Geotechnical					
			A	C	D	E	F	G	H	J
SUBSURFACE SAMPLES (Continued)										
1940	114671	2.0 - 4.0						UC		X
	114672	4.0 - 6.0			X[g]					
	114673				TOC					
	114674[b]	6.0 - 6.5	X							
1956	114857	0.0 - 4.0		X						
	114858								X	
	114861				W	X				
	114859	6.0 - 7.0		X[b]						X
	114862[b]	7.0 - 9.5			X[g]					
	114863[b]				TOC					
		10.0 - 10.5		X						
		10.5 - 12.5			X					1
		12.5 - 14.5				X	X			
1957	114835[b]	0.5 - 2.0		X[f]						
	114836[b]								X	
	114854[b]				W					
	114872[b]			1[m]						
	114837	2.0 - 4.0			TOC	X				X
	114855[b]				X[g]					
	114838[b]	4.0 - 5.0		X						
		5.0 - 7.0		X	W				X	
		8.0 - 10.0			X					
		10.0 - 10.5		X						
		10.5 - 13.5								X
1958	114821	0.5 - 2.5		X						
	114822[a]								X	
	114827[a]				W					
	114823	4.5 - 5.0		X						
	114824	5.0 - 6.0			TOC	X				X
	114828[b]				X[g]					
		10.0 - 10.5		X						

See footnotes at end of table

TABLE D-1C
(Continued)

Sample Location	Sample Number	Sample Interval (ft.)	Target Analyte List 20.03.05							
			Screening	Chem/Rad	RCRA/Geotechnical					
			A	C	D	E	F	G	H	J
SUBSURFACE SAMPLES (Continued)										
1958 (continued)		10.5 - 12.5			X					
		12.5 - 14.5				X	X			X
1959	114818	2.0 - 3.0			W					
	114812	3.0 - 5.0		X						
	114813								X	
	114819[a]				W					
		5.0 - 5.5		X					X	
		5.5 - 7.5				X				X
	114814	8.0 - 8.5		X						
		8.0 - 10.0				X				X
		10.0 - 10.5		X						
	114815	11.0 - 13.5		X						
	114816				TOC					
	114820				X[g]					
1960	114733	2.5 - 5.0							X	
	114736				W					
	114734	5.0 - 6.0		X						
		5.5 - 7.5								X
		10.0 - 12.0					X			X
	114737[a]	13.0 - 13.5		X						
1961	114745	2.0 - 4.0		X						
	114746								X	
	114747	7.0 - 9.0			TOC					X
	114748				X[g]					
	114742	10.0 - 12.0			TOC					
	114749				X[g]					
	114743	12.0 - 13.0		X						
1962	114604	2.5 - 4.5			W					
	114609								X	
	114605	4.5 - 7.0		X						X
	114607[a]	12.5 - 14.0		X						

See footnotes at end of table

TABLE D-1C
(Continued)

Sample Location	Sample Number	Sample Interval (ft.)	Target Analyte List 20.03.05							
			Screening	Chem/Rad	RCRA/Geotechnical					
			A	C	D	E	F	G	H	J
SUBSURFACE SAMPLES (Continued)										
1962 (continued)		12.5 - 15.0				X	X			X
1963	114762	2.0 - 4.0		X						
	114763								X	
	114764	4.0 - 6.0			TOC					
	114793				X[g]					
		6.0 - 8.0								X
		10.0 - 12.0			X					
	114794	12.0 - 15.5			X[g]					
	114765				TOC					
	114766			X						
	114874[b]	17.0 - 18.5		X[f]						
	114879[b]			X[m]						
2935	110789	2.0 - 4.0	X							
	110790				X[g]					
	110811				TOC					
2936	110938	2.0 - 4.0						UC		X
	110942	4.0 - 6.0	X							
	110943				X[g]					
	110944				TOC					
2939	110828	2.0 - 4.0	X							

See footnotes at end of table

TABLE D-1C
(Continued)

TARGET ANALYTE LIST DETAILS:

[A] Water/Soil - Total Uranium

[B] Water - Full Hazardous Substance List (HSL), Full Rad., General Groundwater Quality Parameters

[C] Soil/Sediment/Sludge/Waste - Full HSL, Full Rad.

[D] Classification Tests
SG=Specific Gravity
W=Water Content
LL=Liquid Limit
PL=Plastic Limit
Grain Size
SA=Sieve Analysis
HA=Hydrometer Analysis
Other
TOC=Total Organic Carbon

[E] CON=Consolidation Test

[F] HC=Hydraulic Conductivity

[G] Strength Tests
UC=Unconfined Compression
CIU=Consolidated Isotropic Undrained Triaxial
DS=Direct Shear

[H] Toxicity Characteristic Leaching Procedure (TCLP)

[J] Dry Unit Weight

NOTES: X = Sample analyzed for parameter indicated, except where shaded.

The shaded areas represent samples or analyses that were specified in the Sampling and Analysis Plan (SAP) but were not performed. These differences may be due to field conditions (e.g., dry well) or laboratory variances (e.g., missed holding time).

[a]Substitute samples for samples specified in the SAP

[b]Additional samples not specified in the SAP

[c]TAL B or C without Rad.

[d]TAL B or C with Full Rad., metals, and cyanide only

[e]TAL B or C with Full Rad. only

[f]TAL B or C without volatile organic compounds (VOCs)

[g]TAL B or D without total organic carbon (TOC)

[h]Unfiltered metals and Full Rad. only

[i]Total uranium, thorium, and radium

[j]VOCs, semivolatile organic coumpounds (SVOCs), polychlorinated biphenyls (PCBs), and pesticides only

[k]SVOCs, PCBs, and pesticides only

[l]Full Rad., VOCs, metals, and cyanide only

[m]VOCs only

[n]Metals only

[o]Total uranium, total thorium, isotopic uranium, and isotopic thorium

[p]PCBs and pesticides only

TABLE D-2

TABLE D-2A

LIME SLUDGE PONDS
CONCENTRATIONS OF DETECTED ANALYTES
ABOVE BACKGROUND IN SURFACE SOIL
PHASE II FIELD INVESTIGATION
OPERABLE UNIT 2 REMEDIAL INVESTIGATION
FERNALD ENVIRONMENTAL MANAGEMENT PROJECT

SAMPLE LOCATION	SAMPLE ID	SAMPLE INTERVALS	SAMPLE DATE	PARAMETER	RESULTS	VAL QUAL	BACKGROUND	UNITS
METALS								
LSP-SS-03	114467	0 - .5	01-MAY-93	Barium	97.600	J	88.500	mg/kg
LSP-SS-03	114467	0 - .5	01-MAY-93	Beryllium	1.400	-	.600	mg/kg
LSP-SS-03	114467	0 - .5	01-MAY-93	Cadmium	1.100	-	.770	mg/kg
LSP-SS-03	114467	0 - .5	01-MAY-93	Calcium	20100.000	J	5296.781	mg/kg
LSP-SS-03	114467	0 - .5	01-MAY-93	Copper	25.400	-	15.700	mg/kg
LSP-SS-03	114467	0 - .5	01-MAY-93	Potassium	1470.000	J	1349.530	mg/kg
LSP-SS-03	114467	0 - .5	01-MAY-93	Sodium	90.100	-	55.145	mg/kg
LSP-SS-03	114467	0 - .5	01-MAY-93	Magnesium	9050.000	-	1460.000	mg/kg
LSP-SS-04	114474	0 - .5	02-MAY-93	Barium	99.600	J	88.500	mg/kg
LSP-SS-04	114474	0 - .5	02-MAY-93	Beryllium	1.300	-	.600	mg/kg
LSP-SS-04	114474	0 - .5	02-MAY-93	Calcium	22100.000	J	5296.781	mg/kg
LSP-SS-04	114474	0 - .5	02-MAY-93	Copper	19.900	-	15.700	mg/kg
LSP-SS-04	114474	0 - .5	02-MAY-93	Sodium	98.900	-	55.145	mg/kg
LSP-SS-04	114474	0 - .5	02-MAY-93	Magnesium	8160.000	-	1460.000	mg/kg
LSP-SS-04	114474	0 - .5	02-MAY-93	Cadmium	1.200	-	.770	mg/kg
LSP-SS-05	114485	0 - .5	03-MAY-93	Calcium	347000.000	J	5296.781	mg/kg
LSP-SS-05	114485	0 - .5	03-MAY-93	Chromium	20.100	-	17.057	mg/kg
LSP-SS-05	114485	0 - .5	03-MAY-93	Copper	36.000	-	15.700	mg/kg
LSP-SS-05	114485	0 - .5	03-MAY-93	Cyanide	.320	J	.230	mg/kg
LSP-SS-05	114485	0 - .5	03-MAY-93	Magnesium	15600.000	-	1460.000	mg/kg
LSP-SS-05	114485	0 - .5	03-MAY-93	Sodium	222.000	-	55.145	mg/kg
LSP-SS-05	114485	0 - .5	03-MAY-93	Silicon	3200.000	J	1914.313	mg/kg
LSP-SS-06	114487	0 - .5	03-MAY-93	Calcium	312000.000	J	5296.781	mg/kg
LSP-SS-06	114487	0 - .5	03-MAY-93	Copper	36.000	-	15.700	mg/kg
LSP-SS-06	114487	0 - .5	03-MAY-93	Cyanide	.820	J	.230	mg/kg
LSP-SS-06	114487	0 - .5	03-MAY-93	Magnesium	13800.000	-	1460.000	mg/kg
LSP-SS-06	114487	0 - .5	03-MAY-93	Sodium	231.000	-	55.145	mg/kg
LSP-SS-06	114487	0 - .5	03-MAY-93	Silicon	3550.000	J	1914.313	mg/kg
LSP-SS-07	114477	0 - .5	02-MAY-93	Barium	98.000	-	88.500	mg/kg
LSP-SS-07	114477	0 - .5	02-MAY-93	Beryllium	1.600	-	.600	mg/kg
LSP-SS-07	114477	0 - .5	02-MAY-93	Cadmium	.970	-	.770	mg/kg
LSP-SS-07	114477	0 - .5	02-MAY-93	Zinc	96.600	-	58.500	mg/kg
LSP-SS-07	114477	0 - .5	02-MAY-93	Sodium	131.000	J	55.145	mg/kg
LSP-SS-07	114477	0 - .5	02-MAY-93	Potassium	1700.000	J	1349.530	mg/kg

TABLE D-2A
(Continued)

SAMPLE LOCATION	SAMPLE ID	SAMPLE INTERVALS	SAMPLE DATE	PARAMETER	RESULTS	VAL QUAL	BACKGROUND	UNITS
METALS (Continued)								
LSP-SS-07	114477	0 - .5	02-MAY-93	Molybdenum	1.600	-	.000	mg/kg
LSP-SS-07	114477	0 - .5	02-MAY-93	Magnesium	16900.000	J	1460.000	mg/kg
LSP-SS-07	114477	0 - .5	02-MAY-93	Copper	22.000	-	15.700	mg/kg
LSP-SS-07	114477	0 - .5	02-MAY-93	Chromium	18.900	-	17.057	mg/kg
LSP-SS-07	114477	0 - .5	02-MAY-93	Calcium	52500.000	-	5296.781	mg/kg
LSP-SS-08	114488	0 - .5	03-MAY-93	Barium	97.600	J	88.500	mg/kg
LSP-SS-08	114488	0 - .5	03-MAY-93	Beryllium	1.300	-	.600	mg/kg
LSP-SS-08	114488	0 - .5	03-MAY-93	Cadmium	.960	-	.770	mg/kg
LSP-SS-08	114488	0 - .5	03-MAY-93	Calcium	31100.000	J	5296.781	mg/kg
LSP-SS-08	114488	0 - .5	03-MAY-93	Copper	21.300	-	15.700	mg/kg
LSP-SS-08	114488	0 - .5	03-MAY-93	Sodium	104.000	-	55.145	mg/kg
LSP-SS-08	114488	0 - .5	03-MAY-93	Magnesium	11400.000	-	1460.000	mg/kg
LSP-SS-09	114598	0 - .5	19-MAY-93	Calcium	279000.000	-	5296.781	mg/kg
LSP-SS-09	114598	0 - .5	19-MAY-93	Sodium	224.000	-	55.145	mg/kg
LSP-SS-09	114598	0 - .5	19-MAY-93	Magnesium	14700.000	-	1460.000	mg/kg
LSP-SS-09	114598	0 - .5	19-MAY-93	Copper	18.500	-	15.700	mg/kg
LSP-SS-10	114881	0 - .5	14-JUN-93	Beryllium	.880	J	.600	mg/kg
LSP-SS-10	114881	0 - .5	14-JUN-93	Cyanide	.440	J	.230	mg/kg
LSP-SS-10	114881	0 - .5	14-JUN-93	Magnesium	19900.000	J	1460.000	mg/kg
LSP-SS-10	114881	0 - .5	14-JUN-93	Copper	16.500	J	15.700	mg/kg
LSP-SS-10	114881	0 - .5	14-JUN-93	Sodium	410.000	J	55.145	mg/kg
LSP-SS-10	114881	0 - .5	14-JUN-93	Calcium	350000.000	J	5296.781	mg/kg
LSP-SS-11	114498	0 - .5	04-MAY-93	Beryllium	1.500	-	.600	mg/kg
LSP-SS-11	114498	0 - .5	04-MAY-93	Sodium	142.000	J	55.145	mg/kg
LSP-SS-11	114498	0 - .5	04-MAY-93	Potassium	1400.000	J	1349.530	mg/kg
LSP-SS-11	114498	0 - .5	04-MAY-93	Magnesium	17500.000	-	1460.000	mg/kg
LSP-SS-11	114498	0 - .5	04-MAY-93	Copper	20.500	J	15.700	mg/kg
LSP-SS-11	114498	0 - .5	04-MAY-93	Calcium	48500.000	-	5296.781	mg/kg
LSP-SS-11	114498	0 - .5	04-MAY-93	Cadmium	1.100	-	.770	mg/kg
LSP-SS-12	114501	0 - .5	04-MAY-93	Beryllium	1.700	-	.600	mg/kg
LSP-SS-12	114501	0 - .5	04-MAY-93	Cadmium	1.100	-	.770	mg/kg
LSP-SS-12	114501	0 - .5	04-MAY-93	Copper	19.100	J	15.700	mg/kg
LSP-SS-12	114501	0 - .5	04-MAY-93	Potassium	2080.000	J	1349.530	mg/kg
LSP-SS-12	114501	0 - .5	04-MAY-93	Magnesium	19600.000	-	1460.000	mg/kg
LSP-SS-12	114501	0 - .5	04-MAY-93	Sodium	155.000	J	55.145	mg/kg
LSP-SS-12	114501	0 - .5	04-MAY-93	Calcium	67000.000	-	5296.781	mg/kg
LSP-SS-13	114514	0 - .5	05-MAY-93	Beryllium	1.800	-	.600	mg/kg
LSP-SS-13	114514	0 - .5	05-MAY-93	Cyanide	.690	J	.230	mg/kg
LSP-SS-13	114514	0 - .5	05-MAY-93	Lead	52.700	J	29.575	mg/kg
LSP-SS-13	114514	0 - .5	05-MAY-93	Silicon	1920.000	-	1914.313	mg/kg
LSP-SS-13	114514	0 - .5	05-MAY-93	Sodium	262.000	J	55.145	mg/kg

000542

TABLE D-2A
(Continued)

SAMPLE LOCATION	SAMPLE ID	SAMPLE INTERVALS	SAMPLE DATE	PARAMETER	RESULTS	VAL QUAL	BACKGROUND	UNITS
METALS (Continued)								
LSP-SS-13	114514	0 - .5	05-MAY-93	Magnesium	27500.000	-	1460.000	mg/kg
LSP-SS-13	114514	0 - .5	05-MAY-93	Copper	18.600	J	15.700	mg/kg
LSP-SS-13	114514	0 - .5	05-MAY-93	Calcium	97300.000	-	5296.781	mg/kg
LSP-SS-14	114516	0 - .5	05-MAY-93	Barium	101.000	-	88.500	mg/kg
LSP-SS-14	114516	0 - .5	05-MAY-93	Zinc	68.000	J	58.500	mg/kg
LSP-SS-14	114516	0 - .5	05-MAY-93	Sodium	222.000	J	55.145	mg/kg
LSP-SS-14	114516	0 - .5	05-MAY-93	Potassium	1930.000	J	1349.530	mg/kg
LSP-SS-14	114516	0 - .5	05-MAY-93	Magnesium	21500.000	-	1460.000	mg/kg
LSP-SS-14	114516	0 - .5	05-MAY-93	Lead	45.900	J	29.575	mg/kg
LSP-SS-14	114516	0 - .5	05-MAY-93	Copper	21.500	J	15.700	mg/kg
LSP-SS-14	114516	0 - .5	05-MAY-93	Chromium	18.000	-	17.057	mg/kg
LSP-SS-14	114516	0 - .5	05-MAY-93	Calcium	83100.000	-	5296.781	mg/kg
LSP-SS-14	114516	0 - .5	05-MAY-93	Cadmium	.980	-	.770	mg/kg
LSP-SS-14	114516	0 - .5	05-MAY-93	Cyanide	.350	J	.230	mg/kg
LSP-SS-14	114516	0 - .5	05-MAY-93	Beryllium	2.000	-	.600	mg/kg
LSP-TR-01	114589	0 - .5	16-MAY-93	Calcium	112000.000	-	5296.781	mg/kg
LSP-TR-01	114589	0 - .5	16-MAY-93	Zinc	107.000	J	58.500	mg/kg
LSP-TR-01	114589	0 - .5	16-MAY-93	Vanadium	39.100	J	33.693	mg/kg
LSP-TR-01	114589	0 - .5	16-MAY-93	Sodium	187.000	-	55.145	mg/kg
LSP-TR-01	114589	0 - .5	16-MAY-93	Silver	20.800	J	.000	mg/kg
LSP-TR-01	114589	0 - .5	16-MAY-93	Chromium	54.200	J	17.057	mg/kg
LSP-TR-01	114589	0 - .5	16-MAY-93	Copper	67.100	-	15.700	mg/kg
LSP-TR-01	114589	0 - .5	16-MAY-93	Lead	58.300	-	29.575	mg/kg
LSP-TR-01	114589	0 - .5	16-MAY-93	Molybdenum	21.000	J	.000	mg/kg
LSP-TR-01	114589	0 - .5	16-MAY-93	Magnesium	17400.000	-	1460.000	mg/kg
LSP-TR-01	114589	0 - .5	16-MAY-93	Iron	74000.000	-	24788.749	mg/kg
LSP-TR-02	114591	0 - .5	16-MAY-93	Calcium	81500.000	-	5296.781	mg/kg
LSP-TR-02	114591	0 - .5	16-MAY-93	Chromium	22.900	-	17.057	mg/kg
LSP-TR-02	114591	0 - .5	16-MAY-93	Zinc	94.400	-	58.500	mg/kg
LSP-TR-02	114591	0 - .5	16-MAY-93	Sodium	184.000	-	55.145	mg/kg
LSP-TR-02	114591	0 - .5	16-MAY-93	Silver	7.100	-	.000	mg/kg
LSP-TR-02	114591	0 - .5	16-MAY-93	Molybdenum	9.700	-	.000	mg/kg
LSP-TR-02	114591	0 - .5	16-MAY-93	Magnesium	16200.000	-	1460.000	mg/kg
LSP-TR-02	114591	0 - .5	16-MAY-93	Lead	240.000	-	29.575	mg/kg
LSP-TR-02	114591	0 - .5	16-MAY-93	Iron	26200.000	-	24788.749	mg/kg
LSP-TR-02	114591	0 - .5	16-MAY-93	Copper	31.800	-	15.700	mg/kg
RADIONUCLIDES								
LSP-SS-03	114467	0 - .5	01-MAY-93	GROSS ALPHA	28.480	J	.000	pCi/g
LSP-SS-03	114467	0 - .5	01-MAY-93	PU-239/240	.037	J	.000	pCi/g
LSP-SS-03	114467	0 - .5	01-MAY-93	TH-230	2.640	-	2.112	pCi/g

TABLE D-2A
(Continued)

SAMPLE LOCATION	SAMPLE ID	SAMPLE INTERVALS	SAMPLE DATE	PARAMETER	RESULTS	VAL QUAL	BACKGROUND	UNITS
RADIONUCLIDES (Continued)								
LSP-SS-03	114467	0 - .5	01-MAY-93	U-235/236	.414	J	.181	pCi/g
LSP-SS-03	114467	0 - .5	01-MAY-93	U-TOTAL	35.800	-	3.240	mg/kg
LSP-SS-03	114467	0 - .5	01-MAY-93	U-238	8.490	J	1.270	pCi/g
LSP-SS-03	114467	0 - .5	01-MAY-93	U-234	8.000	J	1.319	pCi/g
LSP-SS-03	114467	0 - .5	01-MAY-93	RA-228	1.420	-	1.170	pCi/g
LSP-SS-03	114467	0 - .5	01-MAY-93	PU-238	.040	J	.000	pCi/g
LSP-SS-03	114467	0 - .5	01-MAY-93	GROSS BETA	40.640	J	.000	pCi/g
LSP-SS-03	114467	0 - .5	01-MAY-93	NP-237	.160	N	.000	pCi/g
LSP-SS-04	114474	0 - .5	02-MAY-93	GROSS ALPHA	20.600	J	.000	pCi/g
LSP-SS-04	114474	0 - .5	02-MAY-93	U-TOTAL	28.900	-	3.240	mg/kg
LSP-SS-04	114474	0 - .5	02-MAY-93	U-238	6.540	J	1.270	pCi/g
LSP-SS-04	114474	0 - .5	02-MAY-93	U-235/236	.290	J	.181	pCi/g
LSP-SS-04	114474	0 - .5	02-MAY-93	U-234	5.580	J	1.319	pCi/g
LSP-SS-04	114474	0 - .5	02-MAY-93	TH-230	3.000	-	2.112	pCi/g
LSP-SS-04	114474	0 - .5	02-MAY-93	RA-228	1.350	-	1.170	pCi/g
LSP-SS-04	114474	0 - .5	02-MAY-93	PU-239/240	.052	J	.000	pCi/g
LSP-SS-04	114474	0 - .5	02-MAY-93	PU-238	.051	J	.000	pCi/g
LSP-SS-04	114474	0 - .5	02-MAY-93	NP-237	.041	N	.000	pCi/g
LSP-SS-04	114474	0 - .5	02-MAY-93	GROSS BETA	32.900	J	.000	pCi/g
LSP-SS-05	114485	0 - .5	03-MAY-93	GROSS ALPHA	12.900	J	.000	pCi/g
LSP-SS-05	114485	0 - .5	03-MAY-93	NP-237	.590	N	.000	pCi/g
LSP-SS-05	114485	0 - .5	03-MAY-93	PU-238	.662	-	.000	pCi/g
LSP-SS-05	114485	0 - .5	03-MAY-93	U-TOTAL	20.500	-	3.240	mg/kg
LSP-SS-05	114485	0 - .5	03-MAY-93	U-238	6.670	J	1.270	pCi/g
LSP-SS-05	114485	0 - .5	03-MAY-93	U-235/236	.335	J	.181	pCi/g
LSP-SS-05	114485	0 - .5	03-MAY-93	U-234	6.090	J	1.319	pCi/g
LSP-SS-05	114485	0 - .5	03-MAY-93	PU-239/240	.200	J	.000	pCi/g
LSP-SS-05	114485	0 - .5	03-MAY-93	GROSS BETA	17.600	J	.000	pCi/g
LSP-SS-06	114487	0 - .5	03-MAY-93	GROSS BETA	7.740	J	.000	pCi/g
LSP-SS-06	114487	0 - .5	03-MAY-93	U-TOTAL	14.300	J	3.240	mg/kg
LSP-SS-06	114487	0 - .5	03-MAY-93	U-238	2.120	J	1.270	pCi/g
LSP-SS-06	114487	0 - .5	03-MAY-93	NP-237	.050	N	.000	pCi/g
LSP-SS-06	114487	0 - .5	03-MAY-93	U-234	2.440	J	1.319	pCi/g
LSP-SS-06	114487	0 - .5	03-MAY-93	PU-239/240	.030	J	.000	pCi/g
LSP-SS-06	114487	0 - .5	03-MAY-93	PU-238	.240	J	.000	pCi/g
LSP-SS-07	114477	0 - .5	02-MAY-93	GROSS ALPHA	99.650	-	.000	pCi/g
LSP-SS-07	114477	0 - .5	02-MAY-93	GROSS BETA	42.740	-	.000	pCi/g
LSP-SS-07	114477	0 - .5	02-MAY-93	U-TOTAL	14.500	-	3.240	mg/kg
LSP-SS-07	114477	0 - .5	02-MAY-93	U-238	4.640	-	1.270	pCi/g
LSP-SS-07	114477	0 - .5	02-MAY-93	U-234	4.070	-	1.319	pCi/g
LSP-SS-07	114477	0 - .5	02-MAY-93	TH-230	44.800	-	2.112	pCi/g

TABLE D-2A
(Continued)

SAMPLE LOCATION	SAMPLE ID	SAMPLE INTERVALS	SAMPLE DATE	PARAMETER	RESULTS	VAL QUAL	BACKGROUND	UNITS
RADIONUCLIDES (Continued)								
LSP-SS-07	114477	0 - .5	02-MAY-93	RA-228	1.470	-	1.170	pCi/g
LSP-SS-07	114477	0 - .5	02-MAY-93	RA-226	2.450	-	1.528	pCi/g
LSP-SS-07	114477	0 - .5	02-MAY-93	PU-239/240	.042	J	.000	pCi/g
LSP-SS-07	114477	0 - .5	02-MAY-93	PU-238	.057	J	.000	pCi/g
LSP-SS-07	114477	0 - .5	02-MAY-93	NP-237	.096	N	.000	pCi/g
LSP-SS-08	114488	0 - .5	03-MAY-93	GROSS ALPHA	23.600	J	.000	pCi/g
LSP-SS-08	114488	0 - .5	03-MAY-93	U-TOTAL	27.000	-	3.240	mg/kg
LSP-SS-08	114488	0 - .5	03-MAY-93	U-238	6.690	J	1.270	pCi/g
LSP-SS-08	114488	0 - .5	03-MAY-93	U-235/236	.420	J	.181	pCi/g
LSP-SS-08	114488	0 - .5	03-MAY-93	U-234	5.900	J	1.319	pCi/g
LSP-SS-08	114488	0 - .5	03-MAY-93	PU-239/240	.051	J	.000	pCi/g
LSP-SS-08	114488	0 - .5	03-MAY-93	PU-238	.040	J	.000	pCi/g
LSP-SS-08	114488	0 - .5	03-MAY-93	GROSS BETA	34.700	J	.000	pCi/g
LSP-SS-08	114488	0 - .5	03-MAY-93	TH-230	2.400	-	2.112	pCi/g
LSP-SS-08	114488	0 - .5	03-MAY-93	NP-237	.040	N	.000	pCi/g
LSP-SS-09	114598	0 - .5	19-MAY-93	GROSS BETA	7.980	J	.000	pCi/g
LSP-SS-09	114598	0 - .5	19-MAY-93	NP-237	.040	N	.000	pCi/g
LSP-SS-09	114598	0 - .5	19-MAY-93	U-TOTAL	4.260	J	3.240	mg/kg
LSP-SS-10	114881	0 - .5	14-JUN-93	GROSS ALPHA	20.300	J	.000	pCi/g
LSP-SS-10	114881	0 - .5	14-JUN-93	NP-237	.161	N	.000	pCi/g
LSP-SS-10	114881	0 - .5	14-JUN-93	GROSS BETA	29.900	J	.000	pCi/g
LSP-SS-11	114498	0 - .5	04-MAY-93	GROSS ALPHA	24.500	-	.000	pCi/g
LSP-SS-11	114498	0 - .5	04-MAY-93	SR-90	.508	J	.000	pCi/g
LSP-SS-11	114498	0 - .5	04-MAY-93	U-234	7.710	J	1.319	pCi/g
LSP-SS-11	114498	0 - .5	04-MAY-93	U-238	9.380	J	1.270	pCi/g
LSP-SS-11	114498	0 - .5	04-MAY-93	U-TOTAL	29.000	-	3.240	mg/kg
LSP-SS-11	114498	0 - .5	04-MAY-93	U-235/236	.377	J	.181	pCi/g
LSP-SS-11	114498	0 - .5	04-MAY-93	TH-230	3.590	J	2.112	pCi/g
LSP-SS-11	114498	0 - .5	04-MAY-93	PU-239/240	.049	J	.000	pCi/g
LSP-SS-11	114498	0 - .5	04-MAY-93	PU-238	.070	J	.000	pCi/g
LSP-SS-11	114498	0 - .5	04-MAY-93	NP-237	.143	N	.000	pCi/g
LSP-SS-11	114498	0 - .5	04-MAY-93	GROSS BETA	31.400	-	.000	pCi/g
LSP-SS-12	114501	0 - .5	04-MAY-93	GROSS ALPHA	41.000	-	.000	pCi/g
LSP-SS-12	114501	0 - .5	04-MAY-93	U-TOTAL	25.700	-	3.240	mg/kg
LSP-SS-12	114501	0 - .5	04-MAY-93	U-238	9.540	J	1.270	pCi/g
LSP-SS-12	114501	0 - .5	04-MAY-93	U-235/236	.348	J	.181	pCi/g
LSP-SS-12	114501	0 - .5	04-MAY-93	U-234	7.870	J	1.319	pCi/g
LSP-SS-12	114501	0 - .5	04-MAY-93	TH-230	6.010	J	2.112	pCi/g
LSP-SS-12	114501	0 - .5	04-MAY-93	PU-239/240	.040	J	.000	pCi/g
LSP-SS-12	114501	0 - .5	04-MAY-93	PU-238	.064	J	.000	pCi/g
LSP-SS-12	114501	0 - .5	04-MAY-93	NP-237	.284	N	.000	pCi/g

TABLE D-2A
(Continued)

SAMPLE LOCATION	SAMPLE ID	SAMPLE INTERVALS	SAMPLE DATE	PARAMETER	RESULTS	VAL QUAL	BACKGROUND	UNITS
RADIONUCLIDES (Continued)								
LSP-SS-12	114501	0 - .5	04-MAY-93	GROSS BETA	36.500	-	.000	pCi/g
LSP-SS-13	114514	0 - .5	05-MAY-93	CS-137	.890	-	.849	pCi/g
LSP-SS-13	114514	0 - .5	05-MAY-93	GROSS BETA	106.000	-	.000	pCi/g
LSP-SS-13	114514	0 - .5	05-MAY-93	RA-228	2.920	-	1.170	pCi/g
LSP-SS-13	114514	0 - .5	05-MAY-93	TH-230	44.800	J	2.112	pCi/g
LSP-SS-13	114514	0 - .5	05-MAY-93	TH-228	2.910	J	1.519	pCi/g
LSP-SS-13	114514	0 - .5	05-MAY-93	U-TOTAL	175.000	-	3.240	mg/kg
LSP-SS-13	114514	0 - .5	05-MAY-93	U-238	56.400	J	1.270	pCi/g
LSP-SS-13	114514	0 - .5	05-MAY-93	U-235/236	1.450	J	.181	pCi/g
LSP-SS-13	114514	0 - .5	05-MAY-93	U-234	22.700	J	1.319	pCi/g
LSP-SS-13	114514	0 - .5	05-MAY-93	TH-TOTAL	25.100	J	10.700	mg/kg
LSP-SS-13	114514	0 - .5	05-MAY-93	TH-232	2.750	J	1.469	pCi/g
LSP-SS-13	114514	0 - .5	05-MAY-93	RA-226	3.470	-	1.528	pCi/g
LSP-SS-13	114514	0 - .5	05-MAY-93	PU-239/240	.119	J	.000	pCi/g
LSP-SS-13	114514	0 - .5	05-MAY-93	PU-238	.242	J	.000	pCi/g
LSP-SS-13	114514	0 - .5	05-MAY-93	NP-237	.720	N	.000	pCi/g
LSP-SS-13	114514	0 - .5	05-MAY-93	GROSS ALPHA	145.000	-	.000	pCi/g
LSP-SS-14	114516	0 - .5	05-MAY-93	GROSS ALPHA	131.000	-	.000	pCi/g
LSP-SS-14	114516	0 - .5	05-MAY-93	GROSS BETA	108.000	-	.000	pCi/g
LSP-SS-14	114516	0 - .5	05-MAY-93	U-TOTAL	244.000	-	3.240	mg/kg
LSP-SS-14	114516	0 - .5	05-MAY-93	U-238	84.000	J	1.270	pCi/g
LSP-SS-14	114516	0 - .5	05-MAY-93	U-235/236	1.830	J	.181	pCi/g
LSP-SS-14	114516	0 - .5	05-MAY-93	U-234	26.500	J	1.319	pCi/g
LSP-SS-14	114516	0 - .5	05-MAY-93	TH-TOTAL	22.300	J	10.700	mg/kg
LSP-SS-14	114516	0 - .5	05-MAY-93	TH-230	40.900	J	2.112	pCi/g
LSP-SS-14	114516	0 - .5	05-MAY-93	TH-228	2.580	J	1.519	pCi/g
LSP-SS-14	114516	0 - .5	05-MAY-93	SR-90	.785	J	.000	pCi/g
LSP-SS-14	114516	0 - .5	05-MAY-93	RA-228	2.850	-	1.170	pCi/g
LSP-SS-14	114516	0 - .5	05-MAY-93	RA-226	3.160	-	1.528	pCi/g
LSP-SS-14	114516	0 - .5	05-MAY-93	PU-239/240	.122	J	.000	pCi/g
LSP-SS-14	114516	0 - .5	05-MAY-93	PU-238	.256	J	.000	pCi/g
LSP-SS-14	114516	0 - .5	05-MAY-93	NP-237	.676	N	.000	pCi/g
LSP-TR-01	114589	0 - .5	16-MAY-93	GROSS ALPHA	78.200	J	.000	pCi/g
LSP-TR-01	114589	0 - .5	16-MAY-93	GROSS BETA	77.100	J	.000	pCi/g
LSP-TR-01	114589	0 - .5	16-MAY-93	NP-237	.160	N	.000	pCi/g
LSP-TR-01	114589	0 - .5	16-MAY-93	RA-226	3.150	-	1.528	pCi/g
LSP-TR-01	114589	0 - .5	16-MAY-93	U-TOTAL	51.600	J	3.240	mg/kg
LSP-TR-01	114589	0 - .5	16-MAY-93	U-238	20.400	-	1.270	pCi/g
LSP-TR-01	114589	0 - .5	16-MAY-93	U-235/236	1.313	-	.181	pCi/g
LSP-TR-01	114589	0 - .5	16-MAY-93	U-234	19.500	-	1.319	pCi/g
LSP-TR-01	114589	0 - .5	16-MAY-93	TH-230	9.790	-	2.112	pCi/g

000646

TABLE D-2A
(Continued)

SAMPLE LOCATION	SAMPLE ID	SAMPLE INTERVALS	SAMPLE DATE	PARAMETER	RESULTS	VAL QUAL	BACKGROUND	UNITS
RADIONUCLIDES (Continued)								
LSP-TR-01	114589	0 - .5	16-MAY-93	TH-228	1.750	-	1.519	pCi/g
LSP-TR-01	114589	0 - .5	16-MAY-93	TC-99	1.050	J	.000	pCi/g
LSP-TR-01	114589	0 - .5	16-MAY-93	RA-228	2.000	-	1.170	pCi/g
LSP-TR-01	114589	0 - .5	16-MAY-93	PU-239/240	.470	J	.000	pCi/g
LSP-TR-01	114589	0 - .5	16-MAY-93	PU-238	.069	J	.000	pCi/g
LSP-TR-02	114591	0 - .5	16-MAY-93	GROSS ALPHA	93.500	J	.000	pCi/g
LSP-TR-02	114591	0 - .5	16-MAY-93	U-234	13.400	-	1.319	pCi/g
LSP-TR-02	114591	0 - .5	16-MAY-93	TH-230	16.230	-	2.112	pCi/g
LSP-TR-02	114591	0 - .5	16-MAY-93	U-TOTAL	45.000	J	3.240	mg/kg
LSP-TR-02	114591	0 - .5	16-MAY-93	U-238	14.800	-	1.270	pCi/g
LSP-TR-02	114591	0 - .5	16-MAY-93	U-235/236	.770	-	.181	pCi/g
LSP-TR-02	114591	0 - .5	16-MAY-93	TH-228	1.540	-	1.519	pCi/g
LSP-TR-02	114591	0 - .5	16-MAY-93	TC-99	1.790	J	.000	pCi/g
LSP-TR-02	114591	0 - .5	16-MAY-93	RA-228	1.800	-	1.170	pCi/g
LSP-TR-02	114591	0 - .5	16-MAY-93	RA-226	3.480	-	1.528	pCi/g
LSP-TR-02	114591	0 - .5	16-MAY-93	GROSS BETA	57.100	J	.000	pCi/g
LSP-TR-02	114591	0 - .5	16-MAY-93	NP-237	.210	N	.000	pCi/g
VOLATILE ORGANICS								
LSP-SS-12	114501	0 - .5	04-MAY-93	Acetone	2.000	J	.000	ug/kg
LSP-SS-12	114501	0 - .5	04-MAY-93	Toluene	4.000	J	.000	ug/kg
LSP-SS-13	114514	0 - .5	05-MAY-93	Toluene	7.000	J	.000	ug/kg
LSP-SS-14	114516	0 - .5	05-MAY-93	Toluene	17.000	-	.000	ug/kg
SEMIVOLATILE ORGANICS								
LSP-SS-03	114467	0 - .5	01-MAY-93	bis(2-Ethylhexyl) phthalate	240.000	J	.000	ug/kg
LSP-SS-04	114474	0 - .5	02-MAY-93	bis(2-Ethylhexyl) phthalate	10000.000	-	.000	ug/kg
LSP-SS-05	114485	0 - .5	03-MAY-93	bis(2-Ethylhexyl) phthalate	78.000	J	.000	ug/kg
LSP-SS-06	114487	0 - .5	03-MAY-93	bis(2-Ethylhexyl) phthalate	220.000	J	.000	ug/kg
LSP-SS-07	114477	0 - .5	02-MAY-93	Di-n-octyl phthalate	87.000	J	.000	ug/kg
LSP-SS-07	114477	0 - .5	02-MAY-93	bis(2-Ethylhexyl) phthalate	1700.000	-	.000	ug/kg
LSP-SS-08	114488	0 - .5	03-MAY-93	bis(2-Ethylhexyl) phthalate	96.000	J	.000	ug/kg
LSP-SS-09	114598	0 - .5	19-MAY-93	Di-n-butyl phthalate	120.000	J	.000	ug/kg
LSP-SS-09	114598	0 - .5	19-MAY-93	bis(2-Ethylhexyl) phthalate	390.000	J	.000	ug/kg
LSP-SS-10	114881	0 - .5	14-JUN-93	bis(2-Ethylhexyl) phthalate	350.000	J	.000	ug/kg
LSP-SS-11	114498	0 - .5	04-MAY-93	Anthracene	1.000	J	.000	ug/kg
LSP-SS-11	114498	0 - .5	04-MAY-93	Benzo(a)pyrene	1.000	J	.000	ug/kg
LSP-SS-11	114498	0 - .5	04-MAY-93	Chrysene	2.000	J	.000	ug/kg
LSP-SS-11	114498	0 - .5	04-MAY-93	Fluoranthene	3.000	J	.000	ug/kg
LSP-SS-11	114498	0 - .5	04-MAY-93	Pyrene	3.000	J	.000	ug/kg
LSP-SS-11	114498	0 - .5	04-MAY-93	Phenanthrene	1.000	J	.000	ug/kg
LSP-SS-11	114498	0 - .5	04-MAY-93	Benzo(b)fluoranthene	2.000	J	.000	ug/kg

TABLE D-2A
(Continued)

SAMPLE LOCATION	SAMPLE ID	SAMPLE INTERVALS	SAMPLE DATE	PARAMETER	RESULTS	VAL QUAL	BACKGROUND	UNITS
SEMIVOLATILE ORGANICS (Continued)								
LSP-SS-11	114498	0 - .5	04-MAY-93	Benzo(k)fluoranthene	2.000	J	.000	ug/kg
LSP-SS-11	114498	0 - .5	04-MAY-93	Benzo(a)anthracene	1.000	J	.000	ug/kg
LSP-SS-12	114501	0 - .5	04-MAY-93	Chrysene	43.000	J	.000	ug/kg
LSP-SS-12	114501	0 - .5	04-MAY-93	Fluoranthene	74.000	J	.000	ug/kg
LSP-SS-12	114501	0 - .5	04-MAY-93	Pyrene	61.000	J	.000	ug/kg
LSP-SS-13	114514	0 - .5	05-MAY-93	Anthracene	120.000	J	.000	ug/kg
LSP-SS-13	114514	0 - .5	05-MAY-93	Pyrene	1100.000	-	.000	ug/kg
LSP-SS-13	114514	0 - .5	05-MAY-93	Phenanthrene	640.000	-	.000	ug/kg
LSP-SS-13	114514	0 - .5	05-MAY-93	Indeno(1,2,3-cd)pyrene	580.000	J	.000	ug/kg
LSP-SS-13	114514	0 - .5	05-MAY-93	Fluoranthene	1300.000	-	.000	ug/kg
LSP-SS-13	114514	0 - .5	05-MAY-93	Dibenzo(a,h)anthracene	240.000	J	.000	ug/kg
LSP-SS-13	114514	0 - .5	05-MAY-93	Di-n-butyl phthalate	42.000	J	.000	ug/kg
LSP-SS-13	114514	0 - .5	05-MAY-93	Chrysene	720.000	-	.000	ug/kg
LSP-SS-13	114514	0 - .5	05-MAY-93	Carbazole	71.000	J	.000	ug/kg
LSP-SS-13	114514	0 - .5	05-MAY-93	Benzo(k)fluoranthene	660.000	-	.000	ug/kg
LSP-SS-13	114514	0 - .5	05-MAY-93	Benzo(b)fluoranthene	680.000	-	.000	ug/kg
LSP-SS-13	114514	0 - .5	05-MAY-93	Benzo(a)pyrene	820.000	-	.000	ug/kg
LSP-SS-13	114514	0 - .5	05-MAY-93	Benzo(a)anthracene	630.000	-	.000	ug/kg
LSP-SS-14	114516	0 - .5	05-MAY-93	Anthracene	240.000	J	.000	ug/kg
LSP-SS-14	114516	0 - .5	05-MAY-93	Pyrene	1900.000	-	.000	ug/kg
LSP-SS-14	114516	0 - .5	05-MAY-93	Phenanthrene	1600.000	-	.000	ug/kg
LSP-SS-14	114516	0 - .5	05-MAY-93	Indeno(1,2,3-cd)pyrene	720.000	J	.000	ug/kg
LSP-SS-14	114516	0 - .5	05-MAY-93	Fluorene	79.000	J	.000	ug/kg
LSP-SS-14	114516	0 - .5	05-MAY-93	Fluoranthene	2100.000	-	.000	ug/kg
LSP-SS-14	114516	0 - .5	05-MAY-93	Dibenzofuran	42.000	J	.000	ug/kg
LSP-SS-14	114516	0 - .5	05-MAY-93	Dibenzo(a,h)anthracene	320.000	J	.000	ug/kg
LSP-SS-14	114516	0 - .5	05-MAY-93	Chrysene	1100.000	-	.000	ug/kg
LSP-SS-14	114516	0 - .5	05-MAY-93	Carbazole	140.000	J	.000	ug/kg
LSP-SS-14	114516	0 - .5	05-MAY-93	Benzo(k)fluoranthene	800.000	-	.000	ug/kg
LSP-SS-14	114516	0 - .5	05-MAY-93	Benzo(g,h,i)perylene	630.000	-	.000	ug/kg
LSP-SS-14	114516	0 - .5	05-MAY-93	Benzo(b)fluoranthene	1000.000	-	.000	ug/kg
LSP-SS-14	114516	0 - .5	05-MAY-93	Benzo(a)anthracene	910.000	-	.000	ug/kg
LSP-SS-14	114516	0 - .5	05-MAY-93	Benzo(a)pyrene	1100.000	-	.000	ug/kg
LSP-TR-01	114589	0 - .5	16-MAY-93	Benzo(b)fluoranthene	55.000	J	.000	ug/kg
LSP-TR-01	114589	0 - .5	16-MAY-93	Pyrene	64.000	J	.000	ug/kg
LSP-TR-01	114589	0 - .5	16-MAY-93	Fluoranthene	77.000	J	.000	ug/kg
LSP-TR-01	114589	0 - .5	16-MAY-93	Chrysene	57.000	J	.000	ug/kg
LSP-TR-02	114591	0 - .5	16-MAY-93	Anthracene	56.000	J	.000	ug/kg
LSP-TR-02	114591	0 - .5	16-MAY-93	Benzo(b)fluoranthene	500.000	-	.000	ug/kg
LSP-TR-02	114591	0 - .5	16-MAY-93	Benzo(a)pyrene	350.000	J	.000	ug/kg
LSP-TR-02	114591	0 - .5	16-MAY-93	Benzo(a)anthracene	610.000	-	.000	ug/kg

TABLE D-2A
(Continued)

SAMPLE LOCATION	SAMPLE ID	SAMPLE INTERVALS	SAMPLE DATE	PARAMETER	RESULTS	VAL QUAL	BACKGROUND	UNITS
SEMIVOLATILE ORGANICS (Continued)								
LSP-TR-02	114591	0 - .5	16-MAY-93	Benzo(k)fluoranthene	450.000	-	.000	ug/kg
LSP-TR-02	114591	0 - .5	16-MAY-93	Indeno(1,2,3-cd)pyrene	210.000	J	.000	ug/kg
LSP-TR-02	114591	0 - .5	16-MAY-93	Fluoranthene	1300.000	-	.000	ug/kg
LSP-TR-02	114591	0 - .5	16-MAY-93	Pyrene	1000.000	-	.000	ug/kg
LSP-TR-02	114591	0 - .5	16-MAY-93	Phenanthrene	250.000	J	.000	ug/kg
LSP-TR-02	114591	0 - .5	16-MAY-93	Dibenzo(a,h)anthracene	110.000	J	.000	ug/kg
LSP-TR-02	114591	0 - .5	16-MAY-93	Chrysene	660.000	-	.000	ug/kg
LSP-TR-02	114591	0 - .5	16-MAY-93	Benzo(g,h,i)perylene	170.000	J	.000	ug/kg
PESTICIDES/PCBS								
LSP-SS-12	114501	0 - .5	04-MAY-93	Aroclor-1254	43.000	-	.000	ug/kg
LSP-SS-13	114514	0 - .5	05-MAY-93	Aroclor-1254	590.000	-	.000	ug/kg
LSP-SS-14	114516	0 - .5	05-MAY-93	Aroclor-1254	90.000	-	.000	ug/kg

000649

6508

TABLE D-2B

LIME SLUDGE PONDS
CONCENTRATIONS OF DETECTED ANALYTES
ABOVE BACKGROUND IN SUBSURFACE SOIL
PHASE I FIELD INVESTIGATION
OPERABLE UNIT 2 REMEDIAL INVESTIGATION
FERNALD ENVIRONMENTAL MANAGEMENT PROJECT

SAMPLE LOCATION	SAMPLE ID	SAMPLE INTERVALS	SAMPLE DATE	PARAMETER	RESULTS	VAL QUAL	BACKGROUND	UNITS
METALS								
LIME	067902	- 2	06-NOV-91	Antimony	20.000	-	.000	mg/kg
LIME	067902	- 2	06-NOV-91	Beryllium	.650	J	.620	mg/kg
LIME	067902	- 2	06-NOV-91	Cadmium	2.500	J	.910	mg/kg
LIME	067902	- 2	06-NOV-91	Calcium	339000.000	J	150000.000	mg/kg
LIME	067902	- 2	06-NOV-91	Cyanide	1.700	J	.170	mg/kg
LIME	067902	- 2	06-NOV-91	Silicon	3220.000	-	1069.496	mg/kg
LIME	067902	- 2	06-NOV-91	Sodium	327.000	-	227.947	mg/kg
LIME	067902	- 2	06-NOV-91	Silver	21.700	J	.000	mg/kg
LIME	067902	- 2	06-NOV-91	Molybdenum	5.700	J	.270	mg/kg
LIME	067902	- 2	06-NOV-91	Chromium	28.100	J	20.953	mg/kg
LIME	067904	- 2	06-NOV-91	Antimony	22.100	J	.000	mg/kg
LIME	067904	- 2	06-NOV-91	Cadmium	4.000	J	.910	mg/kg
LIME	067904	- 2	06-NOV-91	Calcium	323000.000	J	150000.000	mg/kg
LIME	067904	- 2	06-NOV-91	Copper	20.500	J	20.230	mg/kg
LIME	067904	- 2	06-NOV-91	Silicon	5920.000	J	1069.496	mg/kg
LIME	067904	- 2	06-NOV-91	Sodium	599.000	J	227.947	mg/kg
LIME	067904	- 2	06-NOV-91	Thallium	.510	J	.490	mg/kg
LIME	067904	- 2	06-NOV-91	Silver	22.000	J	.000	mg/kg
LIME	067904	- 2	06-NOV-91	Molybdenum	8.200	J	.270	mg/kg
LIME	067904	- 2	06-NOV-91	Chromium	28.200	J	20.953	mg/kg
LIME	067904	- 2	06-NOV-91	Beryllium	.760	J	.620	mg/kg
RADIONUCLIDES								
1041	008448	0 - 1.5	10-APR-88	TH-230	3.800	-	1.897	pCi/g
1041	008448	0 - 1.5	10-APR-88	TH-232	1.500	-	1.269	pCi/g
1041	008448	0 - 1.5	10-APR-88	U-234	3.800	J	1.034	pCi/g
1041	008448	0 - 1.5	10-APR-88	U-238	5.900	J	1.122	pCi/g
2042	008869	3 - 4.5	11-APR-88	SR-90	6.000	J	.560	pCi/g
2042	008869	3 - 4.5	11-APR-88	TH-230	2.300	J	1.897	pCi/g
2042	008869	3 - 4.5	11-APR-88	TH-232	1.300	J	1.269	pCi/g
LIME	067902	- 2	06-NOV-91	TH-228	1.460	J	1.341	pCi/g
LIME	067904	- 2	06-NOV-91	U-234	1.570	J	1.034	pCi/g
LIME	067904	- 2	06-NOV-91	U-TOTAL	5.490	-	2.540	mg/kg
LIME	067904	- 2	06-NOV-91	U-238	1.330	-	1.122	pCi/g

TABLE D-2B
(Continued)

SAMPLE LOCATION	SAMPLE ID	SAMPLE INTERVALS	SAMPLE DATE	PARAMETER	RESULTS	VAL QUAL	BACKGROUND	UNITS
VOLATILE ORGANICS								
LIME	067902	- 2	06-NOV-91	2-Hexanone	2.000	J	.000	ug/kg

TABLE D-2C

LIME SLUDGE PONDS
CONCENTRATIONS OF DETECTED ANALYTES
ABOVE BACKGROUND IN SUBSURFACE SOIL
PHASE II FIELD INVESTIGATION
OPERABLE UNIT 2 REMEDIAL INVESTIGATION
FERNALD ENVIRONMENTAL MANAGEMENT PROJECT

SAMPLE LOCATION	SAMPLE ID	SAMPLE INTERVALS	SAMPLE DATE	PARAMETER	RESULTS	VAL QUAL	BACKGROUND	UNITS
METALS								
1956	114857	0 - 4	08-JUN-93	Arsenic	11.200	J	9.704	mg/kg
1956	114857	0 - 4	08-JUN-93	Beryllium	.720	J	.62	mg/kg
1956	114857	0 - 4	08-JUN-93	Copper	29.800	J	20.23	mg/kg
1956	114857	0 - 4	08-JUN-93	Calcium	269000.000	J	150000	mg/kg
1956	114857	0 - 4	08-JUN-93	Cyanide	.300	J	.17	mg/kg
1956	114857	0 - 4	08-JUN-93	Lead	104.000	J	15.78	mg/kg
1956	114857	0 - 4	08-JUN-93	Silicon	5680.000	J	1069.496	mg/kg
1956	114857	0 - 4	08-JUN-93	Sodium	671.000	J	227.947	mg/kg
1956	114857	0 - 4	08-JUN-93	Molybdenum	3.200	J	.27	mg/kg
1956	114859	6 - 7	08-JUN-93	Barium	135.000	-	121.064	mg/kg
1956	114859	6 - 7	08-JUN-93	Cadmium	1.500	-	.91	mg/kg
1956	114859	6 - 7	08-JUN-93	Cobalt	20.000	-	15.929	mg/kg
1956	114859	6 - 7	08-JUN-93	Beryllium	.790	-	.62	mg/kg
1956	114859	6 - 7	08-JUN-93	Zinc	79.800	J	73.158	mg/kg
1956	114859	6 - 7	08-JUN-93	Sodium	444.000	-	227.947	mg/kg
1956	114859	6 - 7	08-JUN-93	Silicon	1800.000	J	1069.496	mg/kg
1956	114859	6 - 7	08-JUN-93	Potassium	2050.000	-	2007.519	mg/kg
1956	114859	6 - 7	08-JUN-93	Nickel	36.300	-	34.747	mg/kg
1956	114859	6 - 7	08-JUN-93	Manganese	1360.000	-	1045.407	mg/kg
1956	114859	6 - 7	08-JUN-93	Copper	36.600	-	20.23	mg/kg
1957	114835	.5 - 2	07-JUN-93	Copper	25.000	-	20.23	mg/kg
1957	114835	.5 - 2	07-JUN-93	Mercury	.440	J	.29	mg/kg
1957	114835	.5 - 2	07-JUN-93	Sodium	1620.000	J	227.947	mg/kg
1957	114838	4 - 5	07-JUN-93	Arsenic	14.600	-	9.704	mg/kg
1957	114838	4 - 5	07-JUN-93	Zinc	73.200	J	73.158	mg/kg
1957	114838	4 - 5	07-JUN-93	Beryllium	.850	-	.62	mg/kg
1957	114838	4 - 5	07-JUN-93	Lead	17.300	-	15.78	mg/kg
1957	114838	4 - 5	07-JUN-93	Silicon	1640.000	J	1069.496	mg/kg
1957	114838	4 - 5	07-JUN-93	Sodium	503.000	-	227.947	mg/kg
1957	114838	4 - 5	07-JUN-93	Copper	25.100	-	20.23	mg/kg
1957	114838	4 - 5	07-JUN-93	Cobalt	16.900	-	15.929	mg/kg
1958	114821	.5 - 2.5	06-JUN-93	Antimony	23.200	-	0	mg/kg
1958	114821	.5 - 2.5	06-JUN-93	Cyanide	.250	-	.17	mg/kg
1958	114821	.5 - 2.5	06-JUN-93	Sodium	345.000	-	227.947	mg/kg
1958	114821	.5 - 2.5	06-JUN-93	Silicon	7220.000	J	1069.496	mg/kg

000632

TABLE D-2C
(Continued)

SAMPLE LOCATION	SAMPLE ID	SAMPLE INTERVALS	SAMPLE DATE	PARAMETER	RESULTS	VAL QUAL	BACKGROUND	UNITS
METALS (Continued)								
1958	114821	.5 - 2.5	06-JUN-93	Mercury	2.300	J	.29	mg/kg
1958	114821	.5 - 2.5	06-JUN-93	Calcium	353000.000	-	150000	mg/kg
1958	114823	4.5 - 5	06-JUN-93	Aluminum	17700.000	-	16277.291	mg/kg
1958	114823	4.5 - 5	06-JUN-93	Arsenic	13.800	-	9.704	mg/kg
1958	114823	4.5 - 5	06-JUN-93	Copper	28.300	-	20.23	mg/kg
1958	114823	4.5 - 5	06-JUN-93	Vanadium	40.300	-	38.088	mg/kg
1958	114823	4.5 - 5	06-JUN-93	Sodium	373.000	-	227.947	mg/kg
1958	114823	4.5 - 5	06-JUN-93	Zinc	84.100	J	73.158	mg/kg
1958	114823	4.5 - 5	06-JUN-93	Silicon	2500.000	J	1069.496	mg/kg
1958	114823	4.5 - 5	06-JUN-93	Lead	17.600	-	15.78	mg/kg
1958	114823	4.5 - 5	06-JUN-93	Iron	36400.000	-	31188.164	mg/kg
1958	114823	4.5 - 5	06-JUN-93	Cobalt	17.600	-	15.929	mg/kg
1958	114823	4.5 - 5	06-JUN-93	Barium	130.000	-	121.064	mg/kg
1959	114812	3 - 5	05-JUN-93	Aluminum	19700.000	J	16277.291	mg/kg
1959	114812	3 - 5	05-JUN-93	Barium	144.000	J	121.064	mg/kg
1959	114812	3 - 5	05-JUN-93	Vanadium	42.200	J	38.088	mg/kg
1959	114812	3 - 5	05-JUN-93	Sodium	308.000	J	227.947	mg/kg
1959	114812	3 - 5	05-JUN-93	Silicon	3810.000	J	1069.496	mg/kg
1959	114812	3 - 5	05-JUN-93	Potassium	3010.000	J	2007.519	mg/kg
1959	114812	3 - 5	05-JUN-93	Nickel	46.700	J	34.747	mg/kg
1959	114812	3 - 5	05-JUN-93	Iron	48100.000	J	31188.164	mg/kg
1959	114812	3 - 5	05-JUN-93	Copper	44.600	J	20.23	mg/kg
1959	114812	3 - 5	05-JUN-93	Cobalt	30.200	J	15.929	mg/kg
1959	114812	3 - 5	05-JUN-93	Chromium	21.100	J	20.953	mg/kg
1959	114812	3 - 5	05-JUN-93	Beryllium	1.500	J	.62	mg/kg
1959	114812	3 - 5	05-JUN-93	Zinc	122.000	J	73.158	mg/kg
1959	114812	3 - 5	05-JUN-93	Antimony	29.200	J	0	mg/kg
1959	114814	8 - 8.5	05-JUN-93	Calcium	180000.000	-	150000	mg/kg
1959	114814	8 - 8.5	05-JUN-93	Silicon	4230.000	J	1069.496	mg/kg
1959	114814	8 - 8.5	05-JUN-93	Sodium	306.000	-	227.947	mg/kg
1959	114815	11 - 13.5	05-JUN-93	Potassium	3170.000	-	2007.519	mg/kg
1959	114815	11 - 13.5	05-JUN-93	Silicon	4060.000	J	1069.496	mg/kg
1959	114815	11 - 13.5	05-JUN-93	Sodium	249.000	-	227.947	mg/kg
1960	114734	5 - 6	27-MAY-93	Calcium	254000.000	-	150000	mg/kg
1960	114734	5 - 6	27-MAY-93	Sodium	253.000	-	227.947	mg/kg
1960	114737	13 - 13.5	28-MAY-93	Molybdenum	2.800	J	.27	mg/kg
1960	114737	13 - 13.5	28-MAY-93	Silver	2.500	J	0	mg/kg
1961	114743	12 - 13	01-JUN-93	Copper	20.300	-	20.23	mg/kg
1961	114743	12 - 13	01-JUN-93	Potassium	2500.000	-	2007.519	mg/kg
1961	114743	12 - 13	01-JUN-93	Silicon	1230.000	J	1069.496	mg/kg
1961	114743	12 - 13	01-JUN-93	Silver	5.800	-	0	mg/kg
1961	114743	12 - 13	01-JUN-93	Molybdenum	6.700	-	.27	mg/kg

TABLE D-2C
(Continued)

SAMPLE LOCATION	SAMPLE ID	SAMPLE INTERVALS	SAMPLE DATE	PARAMETER	RESULTS	VAL QUAL	BACKGROUND	UNITS
METALS (Continued)								
1961	114745	2 - 4	01-JUN-93	Calcium	328000.000	J	150000	mg/kg
1961	114745	2 - 4	01-JUN-93	Sodium	232.000	J	227.947	mg/kg
1961	114745	2 - 4	01-JUN-93	Silicon	5940.000	J	1069.496	mg/kg
1962	114605	4.5 - 7	20-MAY-93	Calcium	270000.000	-	150000	mg/kg
1962	114605	4.5 - 7	20-MAY-93	Silicon	3950.000	-	1069.496	mg/kg
1962	114607	12.5 - 14	25-MAY-93	Molybdenum	2.500	J	.27	mg/kg
1962	114607	12.5 - 14	25-MAY-93	Selenium	.520	-	0	mg/kg
1963	114762	2 - 4	03-JUN-93	Calcium	289000.000	-	150000	mg/kg
1963	114762	2 - 4	03-JUN-93	Sodium	228.000	-	227.947	mg/kg
1963	114762	2 - 4	03-JUN-93	Silicon	3390.000	J	1069.496	mg/kg
1963	114766	13.5 - 15.5	03-JUN-93	Molybdenum	3.800	-	.27	mg/kg
1963	114766	13.5 - 15.5	03-JUN-93	Silver	2.900	-	0	mg/kg
1963	114766	13.5 - 15.5	03-JUN-93	Selenium	.550	-	0	mg/kg
1963	114874	17 - 18	11-JUN-93	Beryllium	.680	-	.62	mg/kg
1963	114874	17 - 18	11-JUN-93	Silver	3.900	-	0	mg/kg
1963	114874	17 - 18	11-JUN-93	Molybdenum	5.200	-	.27	mg/kg
LSP-SB-01	114564	.5 - 1	05-MAY-93	Sodium	263.000	-	227.947	mg/kg
LSP-SB-02	114508	.5 - 1	05-MAY-93	Aluminum	17600.000	-	16277.291	mg/kg
LSP-SB-02	114508	.5 - 1	05-MAY-93	Cadmium	1.600	-	.91	mg/kg
LSP-SB-02	114508	.5 - 1	05-MAY-93	Barium	129.000	-	121.064	mg/kg
LSP-SB-02	114508	.5 - 1	05-MAY-93	Chromium	22.100	-	20.953	mg/kg
LSP-SB-02	114508	.5 - 1	05-MAY-93	Copper	24.500	J	20.23	mg/kg
LSP-SB-02	114508	.5 - 1	05-MAY-93	Beryllium	1.800	-	.62	mg/kg
LSP-SB-03	114510	.5 - 1	05-MAY-93	Aluminum	18000.000	-	16277.291	mg/kg
LSP-SB-03	114510	.5 - 1	05-MAY-93	Barium	123.000	-	121.064	mg/kg
LSP-SB-03	114510	.5 - 1	05-MAY-93	Beryllium	1.800	-	.62	mg/kg
LSP-SB-03	114510	.5 - 1	05-MAY-93	Lead	18.000	J	15.78	mg/kg
LSP-SB-03	114510	.5 - 1	05-MAY-93	Copper	20.400	J	20.23	mg/kg
LSP-SB-03	114510	.5 - 1	05-MAY-93	Cadmium	1.300	-	.91	mg/kg
LSP-SB-04	114570	.5 - 1	06-MAY-93	Beryllium	.880	-	.62	mg/kg
LSP-SB-04	114570	.5 - 1	06-MAY-93	Cadmium	1.100	-	.91	mg/kg
LSP-SB-04	114570	.5 - 1	06-MAY-93	Copper	31.900	J	20.23	mg/kg
LSP-SB-05	114600	.5 - 1	10-MAY-93	Beryllium	.790	-	.62	mg/kg
LSP-SB-05	114600	.5 - 1	10-MAY-93	Cadmium	1.100	-	.91	mg/kg
LSP-SB-05	114600	.5 - 1	10-MAY-93	Silicon	1070.000	J	1069.496	mg/kg
LSP-SB-05	114600	.5 - 1	10-MAY-93	Potassium	2320.000	J	2007.519	mg/kg
LSP-SB-05	114600	.5 - 1	10-MAY-93	Copper	37.600	J	20.23	mg/kg
LSP-SB-06	114602	.5 - 1	10-MAY-93	Barium	166.000	J	121.064	mg/kg
LSP-SB-06	114602	.5 - 1	10-MAY-93	Silicon	1130.000	J	1069.496	mg/kg
LSP-SB-06	114602	.5 - 1	10-MAY-93	Selenium	.260	-	0	mg/kg
LSP-SB-06	114602	.5 - 1	10-MAY-93	Cadmium	1.600	-	.91	mg/kg
LSP-SB-06	1146Q2	.5 - 1	10-MAY-93	Beryllium	.960	-	.62	mg/kg

TABLE D-2C
(Continued)

SAMPLE LOCATION	SAMPLE ID	SAMPLE INTERVALS	SAMPLE DATE	PARAMETER	RESULTS	VAL QUAL	BACKGROUND	UNITS
METALS (Continued)								
LSP-SB-06	114602	.5 - 1	10-MAY-93	Cobalt	16.200	-	15.929	mg/kg
LSP-SB-06	114602	.5 - 1	10-MAY-93	Copper	29.500	J	20.23	mg/kg
LSP-SB-07	114576	.5 - 1	06-MAY-93	Cadmium	1.000	-	.91	mg/kg
LSP-SB-07	114576	.5 - 1	06-MAY-93	Copper	24.300	J	20.23	mg/kg
LSP-SB-07	114576	.5 - 1	06-MAY-93	Selenium	.290	-	0	mg/kg
LSP-SB-07	114576	.5 - 1	06-MAY-93	Silicon	1120.000	J	1069.496	mg/kg
LSP-SS-03	114469	-	01-MAY-93	Beryllium	1.400	-	.62	mg/kg
LSP-SS-03	114469	-	01-MAY-93	Cadmium	1.300	-	.91	mg/kg
LSP-SS-03	114469	-	01-MAY-93	Copper	23.900	-	20.23	mg/kg
LSP-SS-04	114476	.5 - 1	02-MAY-93	Beryllium	1.600	-	.62	mg/kg
LSP-SS-04	114476	.5 - 1	02-MAY-93	Cadmium	1.500	-	.91	mg/kg
LSP-SS-04	114476	.5 - 1	02-MAY-93	Copper	21.300	-	20.23	mg/kg
LSP-SS-07	114479	.5 - 1	02-MAY-93	Beryllium	1.500	-	.62	mg/kg
LSP-SS-07	114479	.5 - 1	02-MAY-93	Molybdenum	1.400	-	.27	mg/kg
LSP-SS-07	114479	.5 - 1	02-MAY-93	Cadmium	.920	-	.91	mg/kg
LSP-SS-07	114479	.5 - 1	02-MAY-93	Lead	16.600	J	15.78	mg/kg
LSP-SS-08	114490	.5 - 1	03-MAY-93	Barium	125.000	J	121.064	mg/kg
LSP-SS-08	114490	.5 - 1	03-MAY-93	Copper	24.000	-	20.23	mg/kg
LSP-SS-08	114490	.5 - 1	03-MAY-93	Cadmium	1.100	-	.91	mg/kg
LSP-SS-08	114490	.5 - 1	03-MAY-93	Beryllium	2.100	-	.62	mg/kg
LSP-SS-11	114500	.5 - 1	04-MAY-93	Beryllium	1.600	-	.62	mg/kg
LSP-SS-11	114500	.5 - 1	04-MAY-93	Cadmium	1.000	-	.91	mg/kg
LSP-SS-11	114500	.5 - 1	04-MAY-93	Copper	21.400	J	20.23	mg/kg
LSP-SS-12	114503	.5 - 1	04-MAY-93	Beryllium	1.800	-	.62	mg/kg
LSP-SS-12	114503	.5 - 1	04-MAY-93	Cadmium	1.300	-	.91	mg/kg
LSP/K65	114776	0 - 6	07-JUN-93	Antimony	21.800	J	0	mg/kg
LSP/K65	114776	0 - 6	07-JUN-93	Molybdenum	1.600	-	.27	mg/kg
LSP/K65 TRNCH	114767	0 - 6	25-MAY-93	Aluminum	18600.000	-	16277.291	mg/kg
LSP/K65 TRNCH	114767	0 - 6	25-MAY-93	Zinc	80.200	-	73.158	mg/kg
LSP/K65 TRNCH	114767	0 - 6	25-MAY-93	Vanadium	42.100	-	38.088	mg/kg
LSP/K65 TRNCH	114767	0 - 6	25-MAY-93	Silver	7.800	-	0	mg/kg
LSP/K65 TRNCH	114767	0 - 6	25-MAY-93	Silicon	1310.000	J	1069.496	mg/kg
LSP/K65 TRNCH	114767	0 - 6	25-MAY-93	Potassium	2150.000	-	2007.519	mg/kg
LSP/K65 TRNCH	114767	0 - 6	25-MAY-93	Molybdenum	8.900	-	.27	mg/kg
LSP/K65 TRNCH	114767	0 - 6	25-MAY-93	Copper	25.100	-	20.23	mg/kg
LSP/K65 TRNCH	114767	0 - 6	25-MAY-93	Beryllium	1.000	-	.62	mg/kg
RADIONUCLIDES								
1956	114857	0 - 4	08-JUN-93	CS-137	.088	J	0	pCi/g
1956	114857	0 - 4	08-JUN-93	NP-237	.086	N	0	pCi/g
1956	114857	0 - 4	08-JUN-93	PU-238	.536	J	0	pCi/g
1956	114857	0 - 4	08-JUN-93	GROSS BETA	16.690	-	0	pCi/g

TABLE D-2C
(Continued)

SAMPLE LOCATION	SAMPLE ID	SAMPLE INTERVALS	SAMPLE DATE	PARAMETER	RESULTS	VAL QUAL	BACKGROUND	UNITS
RADIONUCLIDES (Continued)								
1956	114857	0 - 4	08-JUN-93	U-TOTAL	16.800	J	2.54	mg/kg
1956	114857	0 - 4	08-JUN-93	U-238	3.170	J	1.122	pCi/g
1956	114857	0 - 4	08-JUN-93	U-234	3.370	J	1.034	pCi/g
1956	114857	0 - 4	08-JUN-93	TC-99	.890	J	0	pCi/g
1956	114857	0 - 4	08-JUN-93	PU-239/240	.046	J	0	pCi/g
1956	114857	0 - 4	08-JUN-93	GROSS ALPHA	10.690	J	0	pCi/g
1956	114859	6 - 7	08-JUN-93	GROSS BETA	20.500	-	0	pCi/g
1956	114859	6 - 7	08-JUN-93	PU-239/240	.040	J	0	pCi/g
1956	114859	6 - 7	08-JUN-93	U-TOTAL	13.700	J	2.54	mg/kg
1956	114859	6 - 7	08-JUN-93	PU-238	.107	J	0	pCi/g
1957	114835	.5 - 2	07-JUN-93	CS-137	.060	J	0	pCi/g
1957	114835	.5 - 2	07-JUN-93	U-TOTAL	9.730	-	2.54	mg/kg
1957	114835	.5 - 2	07-JUN-93	PU-239/240	.035	J	0	pCi/g
1957	114835	.5 - 2	07-JUN-93	PU-238	.060	J	0	pCi/g
1957	114835	.5 - 2	07-JUN-93	NP-237	.130	N	0	pCi/g
1957	114835	.5 - 2	07-JUN-93	U-238	2.840	-	1.122	pCi/g
1957	114835	.5 - 2	07-JUN-93	U-234	2.440	-	1.034	pCi/g
1957	114835	.5 - 2	07-JUN-93	GROSS BETA	18.700	-	0	pCi/g
1957	114835	.5 - 2	07-JUN-93	GROSS ALPHA	11.900	J	0	pCi/g
1957	114838	4 - 5	07-JUN-93	GROSS ALPHA	12.150	J	0	pCi/g
1957	114838	4 - 5	07-JUN-93	U-TOTAL	11.100	J	2.54	mg/kg
1957	114838	4 - 5	07-JUN-93	U-238	1.140	J	1.122	pCi/g
1957	114838	4 - 5	07-JUN-93	U-234	1.150	J	1.034	pCi/g
1957	114838	4 - 5	07-JUN-93	TH-TOTAL	12.300	J	9.47	mg/kg
1957	114838	4 - 5	07-JUN-93	RA-228	1.440	-	1.325	pCi/g
1957	114838	4 - 5	07-JUN-93	PU-239/240	.035	J	0	pCi/g
1957	114838	4 - 5	07-JUN-93	PU-238	.065	J	0	pCi/g
1957	114838	4 - 5	07-JUN-93	NP-237	.077	N	0	pCi/g
1957	114838	4 - 5	07-JUN-93	GROSS BETA	27.700	-	0	pCi/g
1958	114821	.5 - 2.5	06-JUN-93	U-234	1.910	-	1.034	pCi/g
1958	114821	.5 - 2.5	06-JUN-93	U-TOTAL	14.000	-	2.54	mg/kg
1958	114821	.5 - 2.5	06-JUN-93	U-238	1.840	-	1.122	pCi/g
1958	114821	.5 - 2.5	06-JUN-93	U-235/236	.144	J	.142	pCi/g
1958	114823	4.5 - 5	06-JUN-93	GROSS BETA	27.400	-	0	pCi/g
1958	114823	4.5 - 5	06-JUN-93	U-TOTAL	13.100	-	2.54	mg/kg
1958	114823	4.5 - 5	06-JUN-93	U-238	1.370	-	1.122	pCi/g
1958	114823	4.5 - 5	06-JUN-93	U-234	1.290	-	1.034	pCi/g
1958	114823	4.5 - 5	06-JUN-93	TH-TOTAL	11.000	J	9.47	mg/kg
1959	114812	3 - 5	05-JUN-93	PU-238	.133	J	0	pCi/g
1959	114812	3 - 5	05-JUN-93	PU-239/240	.133	J	0	pCi/g
1959	114812	3 - 5	05-JUN-93	U-TOTAL	15.000	-	2.54	mg/kg
1959	114812	3 - 5	05-JUN-93	U-238	2.470	-	1.122	pCi/g

TABLE D-2C
(Continued)

SAMPLE LOCATION	SAMPLE ID	SAMPLE INTERVALS	SAMPLE DATE	PARAMETER	RESULTS	VAL QUAL	BACKGROUND	UNITS
RADIONUCLIDES (Continued)								
1959	114812	3 - 5	05-JUN-93	U-235/236	.199	J	.142	pCi/g
1959	114812	3 - 5	05-JUN-93	U-234	2.550	-	1.034	pCi/g
1959	114814	8 - 8.5	05-JUN-93	GROSS ALPHA	12.900	-	0	pCi/g
1959	114814	8 - 8.5	05-JUN-93	GROSS BETA	23.700	-	0	pCi/g
1959	114814	8 - 8.5	05-JUN-93	NP-237	.071	N	0	pCi/g
1959	114814	8 - 8.5	05-JUN-93	U-TOTAL	12.300	-	2.54	mg/kg
1959	114814	8 - 8.5	05-JUN-93	U-238	1.150	-	1.122	pCi/g
1959	114814	8 - 8.5	05-JUN-93	U-234	1.080	-	1.034	pCi/g
1959	114814	8 - 8.5	05-JUN-93	TH-TOTAL	11.500	J	9.47	mg/kg
1959	114814	8 - 8.5	05-JUN-93	PU-239/240	.016	J	0	pCi/g
1959	114814	8 - 8.5	05-JUN-93	PU-238	.039	J	0	pCi/g
1959	114815	11 - 13.5	05-JUN-93	GROSS BETA	25.300	-	0	pCi/g
1959	114815	11 - 13.5	05-JUN-93	NP-237	.054	N	0	pCi/g
1959	114815	11 - 13.5	05-JUN-93	PU-238	.016	J	0	pCi/g
1959	114815	11 - 13.5	05-JUN-93	U-234	1.140	-	1.034	pCi/g
1959	114815	11 - 13.5	05-JUN-93	U-TOTAL	11.300	-	2.54	mg/kg
1959	114815	11 - 13.5	05-JUN-93	U-238	1.150	-	1.122	pCi/g
1959	114815	11 - 13.5	05-JUN-93	PU-239/240	.020	J	0	pCi/g
1960	114734	5 - 6	27-MAY-93	GROSS BETA	7.200	J	0	pCi/g
1960	114734	5 - 6	27-MAY-93	PU-238	.104	J	0	pCi/g
1960	114734	5 - 6	27-MAY-93	U-TOTAL	3.720	-	2.54	mg/kg
1960	114734	5 - 6	27-MAY-93	U-238	1.590	-	1.122	pCi/g
1960	114734	5 - 6	27-MAY-93	U-234	1.470	-	1.034	pCi/g
1960	114734	5 - 6	27-MAY-93	PU-239/240	.044	J	0	pCi/g
1960	114737	13 - 13.5	28-MAY-93	GROSS ALPHA	11.900	-	0	pCi/g
1960	114737	13 - 13.5	28-MAY-93	GROSS BETA	16.200	-	0	pCi/g
1960	114737	13 - 13.5	28-MAY-93	U-TOTAL	12.300	-	2.54	mg/kg
1960	114737	13 - 13.5	28-MAY-93	TH-230	4.510	-	1.897	pCi/g
1960	114737	13 - 13.5	28-MAY-93	PU-238	.020	J	0	pCi/g
1960	114737	13 - 13.5	28-MAY-93	NP-237	.050	N	0	pCi/g
1961	114743	12 - 13	01-JUN-93	GROSS BETA	14.600	-	0	pCi/g
1961	114743	12 - 13	01-JUN-93	U-234	1.050	-	1.034	pCi/g
1961	114743	12 - 13	01-JUN-93	U-TOTAL	14.300	-	2.54	mg/kg
1961	114743	12 - 13	01-JUN-93	U-238	1.170	-	1.122	pCi/g
1961	114745	2 - 4	01-JUN-93	GROSS BETA	7.800	-	0	pCi/g
1961	114745	2 - 4	01-JUN-93	TH-230	2.700	J	1.897	pCi/g
1961	114745	2 - 4	01-JUN-93	U-234	1.850	-	1.034	pCi/g
1961	114745	2 - 4	01-JUN-93	U-238	1.860	-	1.122	pCi/g
1961	114745	2 - 4	01-JUN-93	U-TOTAL	13.500	-	2.54	mg/kg
1961	114745	2 - 4	01-JUN-93	U-235/236	.960	-	.142	pCi/g
1962	114605	4.5 - 7	20-MAY-93	CS-137	.029	J	0	pCi/g
1962	114605	4.5 - 7	20-MAY-93	GROSS ALPHA	9.730	J	0	pCi/g

TABLE D-2C
(Continued)

SAMPLE LOCATION	SAMPLE ID	SAMPLE INTERVALS	SAMPLE DATE	PARAMETER	RESULTS	VAL QUAL	BACKGROUND	UNITS
RADIONUCLIDES (Continued)								
1962	114605	4.5 - 7	20-MAY-93	U-TOTAL	6.760	-	2.54	mg/kg
1962	114605	4.5 - 7	20-MAY-93	U-238	3.330	J	1.122	pCi/g
1962	114605	4.5 - 7	20-MAY-93	U-235/236	.233	J	.142	pCi/g
1962	114605	4.5 - 7	20-MAY-93	U-234	3.310	-	1.034	pCi/g
1962	114605	4.5 - 7	20-MAY-93	TH-230	3.060	-	1.897	pCi/g
1962	114605	4.5 - 7	20-MAY-93	PU-238	.144	J	0	pCi/g
1962	114605	4.5 - 7	20-MAY-93	GROSS BETA	6.430	J	0	pCi/g
1962	114607	12.5 - 14	25-MAY-93	GROSS ALPHA	9.740	J	0	pCi/g
1962	114607	12.5 - 14	25-MAY-93	TH-230	2.470	-	1.897	pCi/g
1962	114607	12.5 - 14	25-MAY-93	PU-238	.043	J	0	pCi/g
1962	114607	12.5 - 14	25-MAY-93	GROSS BETA	15.970	J	0	pCi/g
1963	114762	2 - 4	03-JUN-93	U-TOTAL	10.600	-	2.54	mg/kg
1963	114766	13.5 - 15.5	03-JUN-93	GROSS BETA	13.400	-	0	pCi/g
1963	114766	13.5 - 15.5	03-JUN-93	U-TOTAL	8.610	-	2.54	mg/kg
1963	114766	13.5 - 15.5	03-JUN-93	NP-237	.050	N	0	pCi/g
1963	114874	17 - 18	11-JUN-93	NP-237	.129	N	0	pCi/g
1963	114874	17 - 18	11-JUN-93	U-TOTAL	4.010	-	2.54	mg/kg
LSP-SB-01	114564	.5 - 1	05-MAY-93	GROSS ALPHA	14.900	J	0	pCi/g
LSP-SB-01	114564	.5 - 1	05-MAY-93	NP-237	.110	N	0	pCi/g
LSP-SB-01	114564	.5 - 1	05-MAY-93	U-238	1.990	-	1.122	pCi/g
LSP-SB-01	114564	.5 - 1	05-MAY-93	U-TOTAL	6.910	-	2.54	mg/kg
LSP-SB-01	114564	.5 - 1	05-MAY-93	GROSS BETA	25.800	J	0	pCi/g
LSP-SB-01	114564	.5 - 1	05-MAY-93	PU-238	.030	J	0	pCi/g
LSP-SB-01	114564	.5 - 1	05-MAY-93	PU-239/240	.030	J	0	pCi/g
LSP-SB-01	114564	.5 - 1	05-MAY-93	U-234	1.600	-	1.034	pCi/g
LSP-SB-02	114508	.5 - 1	05-MAY-93	GROSS ALPHA	21.900	-	0	pCi/g
LSP-SB-02	114508	.5 - 1	05-MAY-93	U-TOTAL	15.100	-	2.54	mg/kg
LSP-SB-02	114508	.5 - 1	05-MAY-93	U-238	3.930	J	1.122	pCi/g
LSP-SB-02	114508	.5 - 1	05-MAY-93	U-235/236	.203	J	.142	pCi/g
LSP-SB-02	114508	.5 - 1	05-MAY-93	GROSS BETA	32.300	-	0	pCi/g
LSP-SB-02	114508	.5 - 1	05-MAY-93	PU-239/240	.042	J	0	pCi/g
LSP-SB-02	114508	.5 - 1	05-MAY-93	SR-90	.959	J	.56	pCi/g
LSP-SB-02	114508	.5 - 1	05-MAY-93	U-234	3.710	J	1.034	pCi/g
LSP-SB-02	114508	.5 - 1	05-MAY-93	PU-238	.042	J	0	pCi/g
LSP-SB-02	114508	.5 - 1	05-MAY-93	NP-237	.111	N	0	pCi/g
LSP-SB-03	114510	.5 - 1	05-MAY-93	CS-137	.094	J	0	pCi/g
LSP-SB-03	114510	.5 - 1	05-MAY-93	U-TOTAL	23.500	-	2.54	mg/kg
LSP-SB-03	114510	.5 - 1	05-MAY-93	U-238	8.750	J	1.122	pCi/g
LSP-SB-03	114510	.5 - 1	05-MAY-93	U-235/236	.204	J	.142	pCi/g
LSP-SB-03	114510	.5 - 1	05-MAY-93	U-234	4.280	J	1.034	pCi/g
LSP-SB-03	114510	.5 - 1	05-MAY-93	TH-230	1.940	J	1.897	pCi/g
LSP-SB-03	114510	.5 - 1	05-MAY-93	SR-90	.841	J	.56	pCi/g

TABLE D-2C
(Continued)

SAMPLE LOCATION	SAMPLE ID	SAMPLE INTERVALS	SAMPLE DATE	PARAMETER	RESULTS	VAL QUAL	BACKGROUND	UNITS
RADIONUCLIDES (Continued)								
LSP-SB-03	114510	.5 - 1	05-MAY-93	PU-239/240	.013	J	0	pCi/g
LSP-SB-03	114510	.5 - 1	05-MAY-93	NP-237	.044	N	0	pCi/g
LSP-SB-03	114510	.5 - 1	05-MAY-93	GROSS BETA	29.800	-	0	pCi/g
LSP-SB-03	114510	.5 - 1	05-MAY-93	GROSS ALPHA	22.700	-	0	pCi/g
LSP-SB-04	114570	.5 - 1	06-MAY-93	CS-137	.100	J	0	pCi/g
LSP-SB-04	114570	.5 - 1	06-MAY-93	PU-238	.110	J	0	pCi/g
LSP-SB-04	114570	.5 - 1	06-MAY-93	U-TOTAL	25.200	J	2.54	mg/kg
LSP-SB-04	114570	.5 - 1	06-MAY-93	U-238	6.470	J	1.122	pCi/g
LSP-SB-04	114570	.5 - 1	06-MAY-93	U-235/236	.260	J	.142	pCi/g
LSP-SB-04	114570	.5 - 1	06-MAY-93	U-234	5.450	J	1.034	pCi/g
LSP-SB-04	114570	.5 - 1	06-MAY-93	TH-230	4.740	J	1.897	pCi/g
LSP-SB-04	114570	.5 - 1	06-MAY-93	RA-228	1.430	-	1.325	pCi/g
LSP-SB-04	114570	.5 - 1	06-MAY-93	PU-239/240	.090	J	0	pCi/g
LSP-SB-04	114570	.5 - 1	06-MAY-93	NP-237	.480	N	0	pCi/g
LSP-SB-04	114570	.5 - 1	06-MAY-93	GROSS BETA	39.000	J	0	pCi/g
LSP-SB-04	114570	.5 - 1	06-MAY-93	GROSS ALPHA	27.100	J	0	pCi/g
LSP-SB-05	114600	.5 - 1	10-MAY-93	GROSS ALPHA	16.600	J	0	pCi/g
LSP-SB-05	114600	.5 - 1	10-MAY-93	NP-237	.289	J	0	pCi/g
LSP-SB-05	114600	.5 - 1	10-MAY-93	U-TOTAL	19.100	-	2.54	mg/kg
LSP-SB-05	114600	.5 - 1	10-MAY-93	U-238	3.780	-	1.122	pCi/g
LSP-SB-05	114600	.5 - 1	10-MAY-93	U-235/236	.181	J	.142	pCi/g
LSP-SB-05	114600	.5 - 1	10-MAY-93	U-234	3.460	-	1.034	pCi/g
LSP-SB-05	114600	.5 - 1	10-MAY-93	TH-230	5.020	-	1.897	pCi/g
LSP-SB-05	114600	.5 - 1	10-MAY-93	GROSS BETA	25.500	J	0	pCi/g
LSP-SB-06	114602	.5 - 1	10-MAY-93	GROSS ALPHA	16.400	J	0	pCi/g
LSP-SB-06	114602	.5 - 1	10-MAY-93	U-TOTAL	18.500	-	2.54	mg/kg
LSP-SB-06	114602	.5 - 1	10-MAY-93	U-238	2.750	-	1.122	pCi/g
LSP-SB-06	114602	.5 - 1	10-MAY-93	U-235/236	.143	J	.142	pCi/g
LSP-SB-06	114602	.5 - 1	10-MAY-93	U-234	2.670	-	1.034	pCi/g
LSP-SB-06	114602	.5 - 1	10-MAY-93	NP-237	.354	J	0	pCi/g
LSP-SB-06	114602	.5 - 1	10-MAY-93	GROSS BETA	20.100	J	0	pCi/g
LSP-SB-07	114576	.5 - 1	06-MAY-93	CS-137	.116	-	0	pCi/g
LSP-SB-07	114576	.5 - 1	06-MAY-93	TH-TOTAL	9.840	-	9.47	mg/kg
LSP-SB-07	114576	.5 - 1	06-MAY-93	U-TOTAL	26.400	-	2.54	mg/kg
LSP-SB-07	114576	.5 - 1	06-MAY-93	U-238	5.090	-	1.122	pCi/g
LSP-SB-07	114576	.5 - 1	06-MAY-93	U-235/236	.220	J	.142	pCi/g
LSP-SB-07	114576	.5 - 1	06-MAY-93	U-234	4.490	-	1.034	pCi/g
LSP-SB-07	114576	.5 - 1	06-MAY-93	TH-230	5.190	-	1.897	pCi/g
LSP-SB-07	114576	.5 - 1	06-MAY-93	PU-239/240	.089	J	0	pCi/g
LSP-SB-07	114576	.5 - 1	06-MAY-93	GROSS ALPHA	32.500	J	0	pCi/g
LSP-SB-07	114576	.5 - 1	06-MAY-93	NP-237	.541	N	0	pCi/g
LSP-SB-07	114576	.5 - 1	06-MAY-93	PU-238	.098	J	0	pCi/g

TABLE D-2C
(Continued)

SAMPLE LOCATION	SAMPLE ID	SAMPLE INTERVALS	SAMPLE DATE	PARAMETER	RESULTS	VAL QUAL	BACKGROUND	UNITS
RADIONUCLIDES (Continued)								
LSP-SB-07	114576	.5 - 1	06-MAY-93	GROSS BETA	27.200	J	0	pCi/g
LSP-SS-03	114469	-	01-MAY-93	CS-137	.170	J	0	pCi/g
LSP-SS-03	114469	-	01-MAY-93	U-TOTAL	24.000	-	2.54	mg/kg
LSP-SS-03	114469	-	01-MAY-93	U-238	4.690	J	1.122	pCi/g
LSP-SS-03	114469	-	01-MAY-93	U-235/236	.200	J	.142	pCi/g
LSP-SS-03	114469	-	01-MAY-93	U-234	4.400	J	1.034	pCi/g
LSP-SS-03	114469	-	01-MAY-93	TH-230	2.000	-	1.897	pCi/g
LSP-SS-03	114469	-	01-MAY-93	RA-228	1.330	-	1.325	pCi/g
LSP-SS-03	114469	-	01-MAY-93	PU-239/240	.039	J	0	pCi/g
LSP-SS-03	114469	-	01-MAY-93	PU-238	.060	J	0	pCi/g
LSP-SS-03	114469	-	01-MAY-93	NP-237	.080	N	0	pCi/g
LSP-SS-03	114469	-	01-MAY-93	GROSS BETA	29.280	J	0	pCi/g
LSP-SS-03	114469	-	01-MAY-93	GROSS ALPHA	23.440	J	0	pCi/g
LSP-SS-04	114476	.5 - 1	02-MAY-93	GROSS ALPHA	24.200	J	0	pCi/g
LSP-SS-04	114476	.5 - 1	02-MAY-93	GROSS BETA	27.100	J	0	pCi/g
LSP-SS-04	114476	.5 - 1	02-MAY-93	NP-237	.030	N	0	pCi/g
LSP-SS-04	114476	.5 - 1	02-MAY-93	U-238	4.520	J	1.122	pCi/g
LSP-SS-04	114476	.5 - 1	02-MAY-93	U-TOTAL	20.700	-	2.54	mg/kg
LSP-SS-04	114476	.5 - 1	02-MAY-93	U-235/236	.220	J	.142	pCi/g
LSP-SS-04	114476	.5 - 1	02-MAY-93	U-234	3.830	J	1.034	pCi/g
LSP-SS-04	114476	.5 - 1	02-MAY-93	PU-239/240	.051	J	0	pCi/g
LSP-SS-04	114476	.5 - 1	02-MAY-93	PU-238	.082	J	0	pCi/g
LSP-SS-07	114479	.5 - 1	02-MAY-93	CS-137	.130	J	0	pCi/g
LSP-SS-07	114479	.5 - 1	02-MAY-93	TH-230	32.200	-	1.897	pCi/g
LSP-SS-07	114479	.5 - 1	02-MAY-93	SR-90	.860	J	.56	pCi/g
LSP-SS-07	114479	.5 - 1	02-MAY-93	RA-228	1.370	-	1.325	pCi/g
LSP-SS-07	114479	.5 - 1	02-MAY-93	RA-226	2.360	-	1.47	pCi/g
LSP-SS-07	114479	.5 - 1	02-MAY-93	PU-239/240	.043	J	0	pCi/g
LSP-SS-07	114479	.5 - 1	02-MAY-93	PU-238	.067	J	0	pCi/g
LSP-SS-07	114479	.5 - 1	02-MAY-93	GROSS ALPHA	61.400	-	0	pCi/g
LSP-SS-07	114479	.5 - 1	02-MAY-93	NP-237	.190	N	0	pCi/g
LSP-SS-07	114479	.5 - 1	02-MAY-93	U-TOTAL	17.600	-	2.54	mg/kg
LSP-SS-07	114479	.5 - 1	02-MAY-93	U-238	5.610	-	1.122	pCi/g
LSP-SS-07	114479	.5 - 1	02-MAY-93	U-235/236	.209	J	.142	pCi/g
LSP-SS-07	114479	.5 - 1	02-MAY-93	U-234	4.500	-	1.034	pCi/g
LSP-SS-07	114479	.5 - 1	02-MAY-93	TH-TOTAL	12.200	-	9.47	mg/kg
LSP-SS-07	114479	.5 - 1	02-MAY-93	TH-232	1.340	-	1.269	pCi/g
LSP-SS-07	114479	.5 - 1	02-MAY-93	GROSS BETA	43.360	-	0	pCi/g
LSP-SS-08	114490	.5 - 1	03-MAY-93	GROSS ALPHA	23.700	J	0	pCi/g
LSP-SS-08	114490	.5 - 1	03-MAY-93	GROSS BETA	27.300	J	0	pCi/g
LSP-SS-08	114490	.5 - 1	03-MAY-93	U-TOTAL	22.700	-	2.54	mg/kg
LSP-SS-08	114490	.5 - 1	03-MAY-93	U-238	4.680	J	1.122	pCi/g

TABLE D-2C
(Continued)

SAMPLE LOCATION	SAMPLE ID	SAMPLE INTERVALS	SAMPLE DATE	PARAMETER	RESULTS	VAL QUAL	BACKGROUND	UNITS
RADIONUCLIDES (Continued)								
LSP-SS-08	114490	.5 - 1	03-MAY-93	U-235/236	.290	J	.142	pCi/g
LSP-SS-08	114490	.5 - 1	03-MAY-93	U-234	3.750	J	1.034	pCi/g
LSP-SS-08	114490	.5 - 1	03-MAY-93	PU-238	.040	J	0	pCi/g
LSP-SS-08	114490	.5 - 1	03-MAY-93	TH-230	2.900	-	1.897	pCi/g
LSP-SS-08	114490	.5 - 1	03-MAY-93	RA-228	1.330	-	1.325	pCi/g
LSP-SS-08	114490	.5 - 1	03-MAY-93	PU-239/240	.011	J	0	pCi/g
LSP-SS-08	114490	.5 - 1	03-MAY-93	NP-237	.040	N	0	pCi/g
LSP-SS-11	114500	.5 - 1	04-MAY-93	GROSS ALPHA	24.000	-	0	pCi/g
LSP-SS-11	114500	.5 - 1	04-MAY-93	U-TOTAL	11.200	-	2.54	mg/kg
LSP-SS-11	114500	.5 - 1	04-MAY-93	U-238	4.050	J	1.122	pCi/g
LSP-SS-11	114500	.5 - 1	04-MAY-93	U-235/236	.204	J	.142	pCi/g
LSP-SS-11	114500	.5 - 1	04-MAY-93	U-234	3.660	J	1.034	pCi/g
LSP-SS-11	114500	.5 - 1	04-MAY-93	PU-239/240	.020	J	0	pCi/g
LSP-SS-11	114500	.5 - 1	04-MAY-93	PU-238	.079	J	0	pCi/g
LSP-SS-11	114500	.5 - 1	04-MAY-93	NP-237	.128	N	0	pCi/g
LSP-SS-11	114500	.5 - 1	04-MAY-93	GROSS BETA	35.000	-	0	pCi/g
LSP-SS-12	114503	.5 - 1	04-MAY-93	CS-137	.130	J	0	pCi/g
LSP-SS-12	114503	.5 - 1	04-MAY-93	GROSS ALPHA	25.900	-	0	pCi/g
LSP-SS-12	114503	.5 - 1	04-MAY-93	GROSS BETA	33.200	-	0	pCi/g
LSP-SS-12	114503	.5 - 1	04-MAY-93	NP-237	.045	N	0	pCi/g
LSP-SS-12	114503	.5 - 1	04-MAY-93	U-TOTAL	13.700	-	2.54	mg/kg
LSP-SS-12	114503	.5 - 1	04-MAY-93	U-238	4.100	J	1.122	pCi/g
LSP-SS-12	114503	.5 - 1	04-MAY-93	U-235/236	.197	J	.142	pCi/g
LSP-SS-12	114503	.5 - 1	04-MAY-93	U-234	3.580	J	1.034	pCi/g
LSP-SS-12	114503	.5 - 1	04-MAY-93	TH-230	2.020	J	1.897	pCi/g
LSP/K65	114776	0 - 6	07-JUN-93	CS-137	.092	J	0	pCi/g
LSP/K65	114776	0 - 6	07-JUN-93	GROSS BETA	29.800	-	0	pCi/g
LSP/K65	114776	0 - 6	07-JUN-93	PU-238	.036	J	0	pCi/g
LSP/K65	114776	0 - 6	07-JUN-93	RA-226	2.320	-	1.47	pCi/g
LSP/K65	114776	0 - 6	07-JUN-93	TH-230	20.300	J	1.897	pCi/g
LSP/K65	114776	0 - 6	07-JUN-93	U-234	5.330	J	1.034	pCi/g
LSP/K65	114776	0 - 6	07-JUN-93	TH-TOTAL	13.000	J	9.47	mg/kg
LSP/K65	114776	0 - 6	07-JUN-93	U-TOTAL	24.800	J	2.54	mg/kg
LSP/K65	114776	0 - 6	07-JUN-93	U-238	5.500	J	1.122	pCi/g
LSP/K65	114776	0 - 6	07-JUN-93	U-235/236	.260	J	.142	pCi/g
LSP/K65	114776	0 - 6	07-JUN-93	TH-232	1.430	J	1.269	pCi/g
LSP/K65	114776	0 - 6	07-JUN-93	TH-228	1.750	J	1.341	pCi/g
LSP/K65	114776	0 - 6	07-JUN-93	RA-228	1.720	-	1.325	pCi/g
LSP/K65	114776	0 - 6	07-JUN-93	PU-239/240	.046	J	0	pCi/g
LSP/K65	114776	0 - 6	07-JUN-93	NP-237	.305	N	0	pCi/g
LSP/K65	114776	0 - 6	07-JUN-93	GROSS ALPHA	36.740	J	0	pCi/g
LSP/K65 TRNCH	114767	0 - 6	25-MAY-93	CS-137	.113	J	0	pCi/g

TABLE D-2C
(Continued)

SAMPLE LOCATION	SAMPLE ID	SAMPLE INTERVALS	SAMPLE DATE	PARAMETER	RESULTS	VAL QUAL	BACKGROUND	UNITS
RADIONUCLIDES (Continued)								
LSP/K65 TRNCH	114767	0 - 6	25-MAY-93	U-TOTAL	11.500	-	2.54	mg/kg
LSP/K65 TRNCH	114767	0 - 6	25-MAY-93	U-238	3.910	-	1.122	pCi/g
LSP/K65 TRNCH	114767	0 - 6	25-MAY-93	U-235/236	.277	J	.142	pCi/g
LSP/K65 TRNCH	114767	0 - 6	25-MAY-93	U-234	3.640	-	1.034	pCi/g
LSP/K65 TRNCH	114767	0 - 6	25-MAY-93	TH-230	5.340	-	1.897	pCi/g
LSP/K65 TRNCH	114767	0 - 6	25-MAY-93	RA-226	5.930	-	1.47	pCi/g
LSP/K65 TRNCH	114767	0 - 6	25-MAY-93	PU-239/240	.050	J	0	pCi/g
LSP/K65 TRNCH	114767	0 - 6	25-MAY-93	PU-238	.344	J	0	pCi/g
LSP/K65 TRNCH	114767	0 - 6	25-MAY-93	NP-237	.103	N	0	pCi/g
LSP/K65 TRNCH	114767	0 - 6	25-MAY-93	GROSS BETA	41.200	J	0	pCi/g
LSP/K65 TRNCH	114767	0 - 6	25-MAY-93	GROSS ALPHA	48.100	J	0	pCi/g
VOLATILE ORGANICS								
1956	114857	0 - 4	08-JUN-93	Acetone	11.000	J	0	ug/kg
1956	114859	6 - 7	08-JUN-93	Acetone	21.000	-	0	ug/kg
1957	114838	4 - 5	07-JUN-93	Acetone	6.000	J	0	ug/kg
1958	114821	.5 - 2.5	06-JUN-93	Methylene chloride	31.000	J	0	ug/kg
1959	114812	3 - 5	05-JUN-93	1,1-Dichloroethane	5.000	J	0	ug/kg
1959	114812	3 - 5	05-JUN-93	Acetone	34.000	J	0	ug/kg
1959	114812	3 - 5	05-JUN-93	2-Butanone	5.000	J	0	ug/kg
1959	114814	8 - 8.5	05-JUN-93	2-Butanone	1.000	J	0	ug/kg
1959	114814	8 - 8.5	05-JUN-93	Acetone	7.000	J	0	ug/kg
1960	114737	13 - 13.5	28-MAY-93	Acetone	5.000	J	0	ug/kg
1961	114743	12 - 13	01-JUN-93	Acetone	3.000	J	0	ug/kg
1961	114745	2 - 4	01-JUN-93	Acetone	38.000	-	0	ug/kg
1961	114745	2 - 4	01-JUN-93	Toluene	5.000	J	0	ug/kg
1963	114766	13.5 - 15.5	03-JUN-93	Acetone	5.000	J	0	ug/kg
1963	114879	18 - 18.5	14-JUN-93	2-Butanone	2.000	J	0	ug/kg
1963	114879	18 - 18.5	14-JUN-93	Acetone	10.000	J	0	ug/kg
LSP-SB-06	114602	.5 - 1	10-MAY-93	Toluene	2.000	J	0	ug/kg
LSP-SS-03	114469	-	01-MAY-93	Acetone	12.000	-	0	ug/kg
LSP-SS-04	114476	.5 - 1	02-MAY-93	Toluene	2.000	J	0	ug/kg
LSP-SS-07	114479	.5 - 1	02-MAY-93	Toluene	2.000	J	0	ug/kg
LSP-SS-08	114490	.5 - 1	03-MAY-93	Toluene	11.000	J	0	ug/kg
LSP/K65	114776	0 - 6	07-JUN-93	Toluene	2.000	J	0	ug/kg
SEMIVOLATILE ORGANICS								
1956	114857	0 - 4	08-JUN-93	Anthracene	82.000	J	0	ug/kg
1956	114857	0 - 4	08-JUN-93	bis(2-Ethylhexyl) phthalate	440.000	J	0	ug/kg
1956	114857	0 - 4	08-JUN-93	Phenanthrene	82.000	J	0	ug/kg
1956	114859	6 - 7	08-JUN-93	Benzoic acid	160.000	J	0	ug/kg
1956	114859	6 - 7	08-JUN-93	bis(2-Ethylhexyl) phthalate	88.000	J	0	ug/kg

TABLE D-2C
(Continued)

SAMPLE LOCATION	SAMPLE ID	SAMPLE INTERVALS	SAMPLE DATE	PARAMETER	RESULTS	VAL QUAL	BACKGROUND	UNITS
SEMIVOLATILE ORGANICS (Continued)								
1956	114859	6 - 7	08-JUN-93	Di-n-butyl phthalate	75.000	J	0	ug/kg
1957	114835	.5 - 2	07-JUN-93	bis(2-Ethylhexyl) phthalate	91.000	J	0	ug/kg
1957	114838	4 - 5	07-JUN-93	Di-n-butyl phthalate	59.000	J	0	ug/kg
1957	114838	4 - 5	07-JUN-93	bis(2-Ethylhexyl) phthalate	410.000	J	0	ug/kg
1958	114821	.5 - 2.5	06-JUN-93	bis(2-Ethylhexyl) phthalate	92.000	J	0	ug/kg
1959	114812	3 - 5	05-JUN-93	Di-n-butyl phthalate	140.000	J	0	ug/kg
1959	114812	3 - 5	05-JUN-93	bis(2-Ethylhexyl) phthalate	260.000	J	0	ug/kg
1959	114814	8 - 8.5	05-JUN-93	Di-n-butyl phthalate	48.000	J	0	ug/kg
1959	114815	11 - 13.5	05-JUN-93	Di-n-butyl phthalate	62.000	J	0	ug/kg
1961	114743	12 - 13	01-JUN-93	Di-n-butyl phthalate	68.000	J	0	ug/kg
1961	114743	12 - 13	01-JUN-93	bis(2-Ethylhexyl) phthalate	78.000	J	0	ug/kg
1961	114745	2 - 4	01-JUN-93	bis(2-Ethylhexyl) phthalate	150.000	J	0	ug/kg
1962	114605	4.5 - 7	20-MAY-93	Di-n-butyl phthalate	72.000	J	0	ug/kg
1962	114607	12.5 - 14	25-MAY-93	Di-n-butyl phthalate	2.000	J	0	ug/kg
1962	114607	12.5 - 14	25-MAY-93	bis(2-Ethylhexyl) phthalate	2.000	J	0	ug/kg
1963	114762	2 - 4	03-JUN-93	bis(2-Ethylhexyl) phthalate	88.000	J	0	ug/kg
1963	114874	17 - 18	11-JUN-93	Benzoic acid	90.000	J	0	ug/kg
1963	114874	17 - 18	11-JUN-93	bis(2-Ethylhexyl) phthalate	93.000	J	0	ug/kg
LSP-SB-01	114564	.5 - 1	05-MAY-93	bis(2-Ethylhexyl) phthalate	360.000	J	0	ug/kg
LSP-SB-02	114508	.5 - 1	05-MAY-93	Fluoranthene	57.000	J	0	ug/kg
LSP-SB-02	114508	.5 - 1	05-MAY-93	Pyrene	51.000	J	0	ug/kg
LSP-SB-07	114576	.5 - 1	06-MAY-93	bis(2-Ethylhexyl) phthalate	220.000	J	0	ug/kg
LSP-SS-03	114469	-	01-MAY-93	bis(2-Ethylhexyl) phthalate	140.000	J	0	ug/kg
LSP-SS-04	114476	.5 - 1	02-MAY-93	bis(2-Ethylhexyl) phthalate	580.000	-	0	ug/kg
LSP-SS-07	114479	.5 - 1	02-MAY-93	bis(2-Ethylhexyl) phthalate	4800.000	-	0	ug/kg
LSP-SS-08	114490	.5 - 1	03-MAY-93	bis(2-Ethylhexyl) phthalate	230.000	J	0	ug/kg
LSP/K65	114776	0 - 6	07-JUN-93	bis(2-Ethylhexyl) phthalate	55.000	J	0	ug/kg
LSP/K65 TRNCH	114767	0 - 6	25-MAY-93	N-Nitrosodimethylamine	5.000	J	0	ug/kg
LSP/K65 TRNCH	114767	0 - 6	25-MAY-93	bis(2-Ethylhexyl) phthalate	3.000	J	0	ug/kg

TABLE D-2D

LIME SLUDGE PONDS
CONCENTRATIONS OF DETECTED ANALYTES
ABOVE BACKGROUND[a] IN SURFACE WATER
PHASE I FIELD INVESTIGATION
OPERABLE UNIT 2 REMEDIAL INVESTIGATION
FERNALD ENVIRONMENTAL MANAGEMENT PROJECT

SAMPLE LOCATION	SAMPLE ID	SAMPLE INTERVALS	SAMPLE DATE	PARAMETER	FILTER FLAG	RESULTS	VAL QUAL	BACKGROUND	UNITS
METALS									
LIME SLUDG	067900	-	06-NOV-91	Aluminum	UNKN	.099	J	0	mg/L
LIME SLUDG	067900	-	06-NOV-91	Antimony	N/A	.037	J	0	mg/L
LIME SLUDG	067900	-	06-NOV-91	Boron	UNKN	.211	J	0	mg/L
LIME SLUDG	067900	-	06-NOV-91	Barium	UNKN	.042	J	0	mg/L
LIME SLUDG	067900	-	06-NOV-91	Chromium	UNKN	.016	-	0	mg/L
LIME SLUDG	067900	-	06-NOV-91	Magnesium	UNKN	47.800	-	0	mg/L
LIME SLUDG	067900	-	06-NOV-91	Molybdenum	UNKN	.014	J	0	mg/L
LIME SLUDG	067900	-	06-NOV-91	Silicon	UNKN	.780	J	0	mg/L
LIME SLUDG	067900	-	06-NOV-91	Sodium	UNKN	199.000	-	0	mg/L
LIME SLUDG	067900	-	06-NOV-91	Silver	UNKN	.011	J	0	mg/L
LIME SLUDG	067900	-	06-NOV-91	Potassium	UNKN	13.200	-	0	mg/L
LIME SLUDG	067900	-	06-NOV-91	Manganese	UNKN	.006	-	0	mg/L
LIME SLUDG	067900	-	06-NOV-91	Iron	UNKN	.033	J	0	mg/L
LIME SLUDG	067900	-	06-NOV-91	Calcium	UNKN	47.900	-	0	mg/L
LIME SLUDG	067900	-	06-NOV-91	Cadmium	UNKN	.007	J	0	mg/L
LIME SLUDG	067907	-	07-NOV-91	Aluminum	UNKN	.095	-	0	mg/L
LIME SLUDG	067907	-	07-NOV-91	Calcium	UNKN	43.500	-	0	mg/L
LIME SLUDG	067907	-	07-NOV-91	Iron	UNKN	.023	-	0	mg/L
LIME SLUDG	067907	-	07-NOV-91	Chromium	UNKN	.015	J	0	mg/L
LIME SLUDG	067907	-	07-NOV-91	Zinc	UNKN	.008	-	0	mg/L
LIME SLUDG	067907	-	07-NOV-91	Sodium	UNKN	185.000	-	0	mg/L
LIME SLUDG	067907	-	07-NOV-91	Silver	UNKN	.011	J	0	mg/L
LIME SLUDG	067907	-	07-NOV-91	Silicon	UNKN	1.040	-	0	mg/L
LIME SLUDG	067907	-	07-NOV-91	Potassium	UNKN	11.400	-	0	mg/L
LIME SLUDG	067907	-	07-NOV-91	Molybdenum	UNKN	.018	-	0	mg/L
LIME SLUDG	067907	-	07-NOV-91	Manganese	UNKN	.114	-	0	mg/L
LIME SLUDG	067907	-	07-NOV-91	Magnesium	UNKN	45.900	-	0	mg/L
LIME SLUDG	067907	-	07-NOV-91	Cadmium	UNKN	.007	-	0	mg/L
LIME SLUDG	067907	-	07-NOV-91	Antimony	UNKN	.033	J	0	mg/L

See footnotes at end of table

TABLE D-2D
(Continued)

SAMPLE LOCATION	SAMPLE ID	SAMPLE INTERVALS	SAMPLE DATE	PARAMETER	FILTER FLAG	RESULTS	VAL QUAL	BACKGROUND	UNITS
METALS (Continued)									
LIME SLUDG	067907	-	07-NOV-91	Arsenic	UNKN	.003	-	0	mg/L
LIME SLUDG	067907	-	07-NOV-91	Boron	UNKN	.243	-	0	mg/L
LIME SLUDG	067907	-	07-NOV-91	Barium	UNKN	.033	-	0	mg/L
LIME SLUDG	067008	-	14-MAY-91	Aluminum	N/A	.100	-	0	mg/L
LIME SLUDG	067008	-	14-MAY-91	Iron	N/A	.023	-	0	mg/L
LIME SLUDG	067008	-	14-MAY-91	Magnesium	N/A	33.500	-	0	mg/L
LIME SLUDG	067008	-	14-MAY-91	Lead	N/A	.002	J	0	mg/L
LIME SLUDG	067008	-	14-MAY-91	Zinc	N/A	.193	-	0	mg/L
LIME SLUDG	067008	-	14-MAY-91	Sodium	N/A	272.000	-	0	mg/L
LIME SLUDG	067008	-	14-MAY-91	Silicon	N/A	.402	-	0	mg/L
LIME SLUDG	067008	-	14-MAY-91	Potassium	N/A	8.540	-	0	mg/L
LIME SLUDG	067008	-	14-MAY-91	Molybdenum	N/A	.011	-	0	mg/L
LIME SLUDG	067008	-	14-MAY-91	Mercury	N/A	.001	-	0	mg/L
LIME SLUDG	067008	-	14-MAY-91	Manganese	N/A	.008	-	0	mg/L
LIME SLUDG	067008	-	14-MAY-91	Chromium	N/A	.012	-	0	mg/L
LIME SLUDG	067008	-	14-MAY-91	Arsenic	N/A	.004	J	0	mg/L
LIME SLUDG	067008	-	14-MAY-91	Barium	N/A	.043	-	0	mg/L
LIME SLUDG	067008	-	14-MAY-91	Calcium	N/A	43.300	-	0	mg/L
LIME SLUDG	067008	-	14-MAY-91	Cadmium	N/A	.009	-	0	mg/L
LIME SLUDG	067500	-	29-AUG-91	Aluminum	N/A	.127	-	0	mg/L
LIME SLUDG	067500	-	29-AUG-91	Barium	N/A	.061	-	0	mg/L
LIME SLUDG	067500	-	29-AUG-91	Boron	N/A	.359	-	0	mg/L
LIME SLUDG	067500	-	29-AUG-91	Cadmium	N/A	.004	-	0	mg/L
LIME SLUDG	067500	-	29-AUG-91	Chromium	N/A	.021	J	0	mg/L
LIME SLUDG	067500	-	29-AUG-91	Manganese	N/A	.006	-	0	mg/L
LIME SLUDG	067500	-	29-AUG-91	Magnesium	N/A	24.400	-	0	mg/L
LIME SLUDG	067500	-	29-AUG-91	Silicon	N/A	.520	J	0	mg/L
LIME SLUDG	067500	-	29-AUG-91	Sodium	N/A	299.000	-	0	mg/L
LIME SLUDG	067500	-	29-AUG-91	Silver	N/A	.017	J	0	mg/L
LIME SLUDG	067500	-	29-AUG-91	Zinc	N/A	.016	-	0	mg/L
LIME SLUDG	067500	-	29-AUG-91	Vanadium	N/A	.010	-	0	mg/L
LIME SLUDG	067500	-	29-AUG-91	Potassium	N/A	11.300	-	0	mg/L
LIME SLUDG	067500	-	29-AUG-91	Calcium	N/A	71.000	-	0	mg/L
RADIONUCLIDES									
LIME SLUDG	067008	-	14-MAY-91	U-238	N/A	1.220	-	0	pCi/L
LIME SLUDG	067008	-	14-MAY-91	U-TOTAL	N/A	6.330	-	0	ug/L

See footnotes at end of table

TABLE D-2D
(Continued)

SAMPLE LOCATION	SAMPLE ID	SAMPLE INTERVALS	SAMPLE DATE	PARAMETER	FILTER FLAG	RESULTS	VAL QUAL	BACKGROUND	UNITS
GENERAL CHEMISTRY									
LIME SLUDG	067500	-	29-AUG-91	Chloride	N/A	519.000	-	0	mg/L
LIME SLUDG	067500	-	29-AUG-91	Total Organic Carbon	N/A	279.000	-	0	mg/L
LIME SLUDG	067500	-	29-AUG-91	Total Organic Nitrogen	N/A	.500	-	0	mg/L
LIME SLUDG	067500	-	29-AUG-91	Phosphorus	N/A	.050	J	0	mg/L
LIME SLUDG	067500	-	29-AUG-91	Nitrate	N/A	6.900	-	0	mg/L
LIME SLUDG	067500	-	29-AUG-91	Fluoride	N/A	.270	-	0	mg/L

[a]Zero background concentration has been used for surface water. Background data for surface water is not available at this time.

UNKN = Unknown; filtered status could not be determined.

N/A = Not Applicable

TABLE D-2E

LIME SLUDGE PONDS
CONCENTRATIONS OF DETECTED ANALYTES
ABOVE BACKGROUND[a] IN SURFACE WATER
PHASE II FIELD INVESTIGATION
OPERABLE UNIT 2 REMEDIAL INVESTIGATION
FERNALD ENVIRONMENTAL MANAGEMENT PROJECT

SAMPLE LOCATION	SAMPLE ID	SAMPLE INTERVALS	SAMPLE DATE	PARAMETER	FILTER FLAG	DUPS	RESULTS	VAL QUAL	BACKGROUND	UNITS
METALS										
LSP-SW-01	114593	-	16-MAY-93	Antimony	UNFL		.005	-	0	mg/L
LSP-SW-01	114593	-	16-MAY-93	Barium	UNFL		.018	-	0	mg/L
LSP-SW-01	114593	-	16-MAY-93	Magnesium	UNFL		17.900	-	0	mg/L
LSP-SW-01	114593	-	16-MAY-93	Calcium	UNFL		17.200	-	0	mg/L
LSP-SW-01	114593	-	16-MAY-93	Potassium	UNFL		3.930	-	0	mg/L
LSP-SW-01	114593	-	16-MAY-93	Sodium	UNFL		40.600	-	0	mg/L
LSP-SW-01	114593	-	16-MAY-93	Silicon	UNFL		.572	-	0	mg/L
LSP-SW-01	114595	-	16-MAY-93	Barium	UNFL	DUP	.016	-	0	mg/L
LSP-SW-01	114595	-	16-MAY-93	Calcium	UNFL	DUP	15.900	-	0	mg/L
LSP-SW-01	114595	-	16-MAY-93	Potassium	UNFL	DUP	3.740	-	0	mg/L
LSP-SW-01	114595	-	16-MAY-93	Silicon	UNFL	DUP	.444	-	0	mg/L
LSP-SW-01	114595	-	16-MAY-93	Sodium	UNFL	DUP	39.400	-	0	mg/L
LSP-SW-01	114595	-	16-MAY-93	Magnesium	UNFL	DUP	17.400	-	0	mg/L
RADIONUCLIDES										
LSP-SW-01	114593	-	16-MAY-93	GROSS BETA	UNFL		4.220	J	0	pCi/L
LSP-SW-01	114593	-	16-MAY-93	TH-230	UNFL		.210	J	0	pCi/L
LSP-SW-01	114595	-	16-MAY-93	U-TOTAL	UNFL	DUP	.060	J	0	ug/L
SEMIVOLATILE ORGANICS										
LSP-SW-01	114593	-	16-MAY-93	bis(2-Ethylhexyl) phthalate	UNFL		2.000	J	0	ug/L
PESTICIDES/PCBs										
LSP-SW-01	114595	-	16-MAY-93	alpha-BHC	UNFL	DUP	.002	J	0	ug/L
LSP-SW-01	114595	-	16-MAY-93	gamma-BHC (Lindane)	UNFL	DUP	.005	J	0	ug/L
GENERAL CHEMISTRY										
LSP-SW-01	114593	-	16-MAY-93	Chloride	UNFL		72.000	-	0	mg/L
LSP-SW-01	114593	-	16-MAY-93	Total Kjeldahl Nitrogen	UNFL		.170	-	0	mg/L
LSP-SW-01	114593	-	16-MAY-93	Total Organic Carbon	UNFL		2.240	-	0	mg/L
LSP-SW-01	114593	-	16-MAY-93	Total Organic Nitrogen	UNFL		.170	-	0	mg/L
LSP-SW-01	114593	-	16-MAY-93	Total Organic Halides	UNFL		.023	J	0	mg/L

See footnotes at end of table

FER\CRU2RI\TDO\APP-D\TABD-2E\January 19, 1995 2:44pm

000637

6508

TABLE D-2E
(Continued)

SAMPLE LOCATION	SAMPLE ID	SAMPLE INTERVALS	SAMPLE DATE	PARAMETER	FILTER FLAG	DUPS	RESULTS	VAL QUAL	BACKGROUND	UNITS
GENERAL CHEMISTRY (Continued)										
LSP-SW-01	114593		16-MAY-93	Sulfate	UNFL		39.300	-	0	mg/L
LSP-SW-01	114593	-	16-MAY-93	Fluoride	UNFL		.110	-	0	mg/L
LSP-SW-01	114595	-	16-MAY-93	Chloride	UNFL	DUP	68.600	-	0	mg/L
LSP-SW-01	114595	-	16-MAY-93	Fluoride	UNFL	DUP	.100	-	0	mg/L
LSP-SW-01	114595	-	16-MAY-93	Sulfate	UNFL	DUP	43.000	-	0	mg/L
LSP-SW-01	114595	-	16-MAY-93	Total Kjeldahl Nitrogen	UNFL	DUP	.150	-	0	mg/L
LSP-SW-01	114595	-	16-MAY-93	Total Organic Carbon	UNFL	DUP	2.320	-	0	mg/L
LSP-SW-01	114595	-	16-MAY-93	Total Organic Halides	UNFL	DUP	.023	-	0	mg/L
LSP-SW-01	114595	-	16-MAY-93	Total Organic Nitrogen	UNFL	DUP	.150	-	0	mg/L

[a]Zero background concentration has been used for surface water. Background data for surface water is not available at this time.

UNFL = Unfiltered sample; filtered status identified on Request for Analysis/Chain of Custody

DUP = Duplicate Sample

000568

TABLE D-2F

LIME SLUDGE POND
CONCENTRATIONS OF DETECTED ANALYTES
ABOVE BACKGROUND[a] IN GROUNDWATER - 1000 SERIES
PHASE I FIELD INVESTIGATION
OPERABLE UNIT 2 REMEDIAL INVESTIGATION
FERNALD ENVIRONMENTAL MANAGEMENT PROJECT

SAMPLE LOCATION	SAMPLE ID	SAMPLE INTERVALS	SAMPLE DATE	PARAMETER	FILTER FLAG	RESULTS	VAL QUAL	Background Concentration	UNITS
METALS									
1039	003179	-	11-MAY-88	Calcium	FLTR	274.000	-	125.574	mg/L
1039	003179	-	11-MAY-88	Magnesium	FLTR	109.600	-	49.627	mg/L
1039	003179	-	11-MAY-88	Manganese	FLTR	.986	-	.165	mg/L
1039	003179	-	11-MAY-88	Sodium	FLTR	243.900	-	49.178	mg/L
1039	003491	-	10-AUG-88	Calcium	*F	240.000	-	125.574	mg/L
1039	003491	-	10-AUG-88	Magnesium	*F	100.000	-	49.627	mg/L
1039	003491	-	10-AUG-88	Manganese	*F	.790	-	.165	mg/L
1039	003491	-	10-AUG-88	Sodium	*F	350.000	-	49.178	mg/L
1039	003733	-	20-NOV-88	Calcium	FLTR	186.000	-	125.574	mg/L
1039	003733	-	20-NOV-88	Magnesium	FLTR	71.200	-	49.627	mg/L
1039	003733	-	20-NOV-88	Manganese	FLTR	.643	-	.165	mg/L
1039	003733	-	20-NOV-88	Sodium	FLTR	245.000	-	49.178	mg/L
1039	003928	-	05-FEB-89	Cadmium	FLTR	.010	-	.007	mg/L
1039	003928	-	05-FEB-89	Calcium	FLTR	168.000	-	125.574	mg/L
1039	003928	-	05-FEB-89	Chromium	FLTR	.035	-	.035	mg/L
1039	003928	-	05-FEB-89	Sodium	FLTR	218.000	-	49.178	mg/L
1039	003928	-	05-FEB-89	Manganese	FLTR	.481	-	.165	mg/L
1039	003928	-	05-FEB-89	Magnesium	FLTR	70.000	-	49.627	mg/L
1041	003180	-	11-MAY-88	Calcium	FLTR	172.000	-	125.574	mg/L
1041	003180	-	11-MAY-88	Manganese	FLTR	.614	-	.165	mg/L
1041	003180	-	11-MAY-88	Magnesium	FLTR	70.500	-	49.627	mg/L
1041	003490	-	10-AUG-88	Calcium	*F	150.000	-	125.574	mg/L
1041	003490	-	10-AUG-88	Manganese	*F	.360	-	.165	mg/L
1041	003490	-	10-AUG-88	Magnesium	*F	61.000	-	49.627	mg/L
1041	003732	-	17-NOV-88	Calcium	FLTR	196.000	-	125.574	mg/L
1041	003732	-	17-NOV-88	Molybdenum	FLTR	.030	-	.028	mg/L
1041	003732	-	17-NOV-88	Manganese	FLTR	.670	-	.165	mg/L
1041	003732	-	17-NOV-88	Magnesium	FLTR	72.200	-	49.627	mg/L
1041	003924	-	01-MAR-89	Calcium	FLTR	180.000	-	125.574	mg/L
1041	003924	-	01-MAR-89	Manganese	FLTR	.610	-	.165	mg/L
1041	003924	-	01-MAR-89	Magnesium	FLTR	70.000	-	49.627	mg/L
1042	003182	-	11-MAY-88	Manganese	FLTR	.205	-	.165	mg/L
1042	003416	-	09-AUG-88	Zinc	*F	.140	-	.032	mg/L

See footnotes at end of table

TABLE D-2F
(Continued)

SAMPLE LOCATION	SAMPLE ID	SAMPLE INTERVALS	SAMPLE DATE	PARAMETER	FILTER FLAG	RESULTS	VAL QUAL	Background Concentration	UNITS
RADIONUCLIDES									
1039	003928	-	05-FEB-89	U-238	*U	1.800	-	1.070	pCi/L
1041	003180	-	11-MAY-88	TH-228	*U	1.200	-	1.040	pCi/L
1041	003180	-	11-MAY-88	U-238	*U	2.400	-	1.070	pCi/L
1041	003180	-	11-MAY-88	U-TOTAL	*U	9.000	J	4.000	ug/L
1041	003490	-	10-AUG-88	U-234	*U	2.100	J	1.900	pCi/L
1041	003490	-	10-AUG-88	U-238	*U	1.700	J	1.070	pCi/L
1041	003490	-	10-AUG-88	U-TOTAL	*U	6.000	-	4.000	ug/L
1041	003732	-	17-NOV-88	U-238	*U	2.100	-	1.070	pCi/L
1041	003732	-	17-NOV-88	U-TOTAL	*U	6.000	-	4.000	ug/L
1041	003924	-	01-MAR-89	TH-228	*U	1.100	J	1.040	pCi/L
1041	003924	-	01-MAR-89	U-TOTAL	*U	8.000	-	4.000	ug/L
1041	003924	-	01-MAR-89	U-238	*U	2.400	-	1.070	pCi/L
1042	003182	-	11-MAY-88	U-TOTAL	*U	7.000	J	4.000	ug/L
1042	003416	-	09-AUG-88	U-234	N/A	2.500	-	1.900	pCi/L
1042	003416	-	09-AUG-88	U-238	UNKN	2.200	-	1.070	pCi/L
1042	003416	-	09-AUG-88	U-TOTAL	UNKN	6.000	-	4.000	ug/L
1042	003723	-	17-NOV-88	U-234	*U	3.300	-	1.900	pCi/L
1042	003723	-	17-NOV-88	U-TOTAL	*U	11.000	-	4.000	ug/L
1042	003723	-	17-NOV-88	U-238	*U	3.200	-	1.070	pCi/L
1042	003922	-	01-MAR-89	U-238	*U	9.700	-	1.070	pCi/L
1042	003922	-	01-MAR-89	U-TOTAL	*U	30.000	-	4.000	ug/L
1134	045426	-	18-OCT-89	U-TOTAL	*U	21.000	-	4.000	ug/L
1210	045739	-	22-OCT-89	U-TOTAL	*U	8.400	-	4.000	ug/L
1229	045780	-	23-OCT-89	U-TOTAL	*U	58.000	J	4.000	ug/L
SEMIVOLATILE ORGANICS									
1042	003416	-	09-AUG-88	Phenol	UNFL	50.000	-	.000	ug/L
GENERAL CHEMISTRY									
1039	003179	-	11-MAY-88	Chloride	UNFL	1095.000	-	110.159	mg/L
1039	003491	-	10-AUG-88	Chloride	*U	860.000	-	110.159	mg/L
1039	003491	-	10-AUG-88	Total Kjeldahl Nitrogen	UNFL	21.000	-	.000	mg/L
1039	003491	-	10-AUG-88	Fluoride	UNFL	3.500	-	1.352	mg/L
1039	003733	-	20-NOV-88	Chloride	UNFL	750.000	J	110.159	mg/L
1039	003733	-	20-NOV-88	Total Organic Nitrogen	UNFL	.300	J	.000	mg/L
1039	003733	-	20-NOV-88	Total Kjeldahl Nitrogen	UNFL	.300	J	.000	mg/L
1039	003733	-	20-NOV-88	Sulfate	UNFL	144.000	J	141.894	mg/L
1039	003928	-	05-FEB-89	Chloride	UNFL	700.000	-	110.159	mg/L
1039	003928	-	05-FEB-89	Total Kjeldahl Nitrogen	UNFL	.103	J	.000	mg/L

See footnotes at end of table

TABLE D-2F
(Continued)

SAMPLE LOCATION	SAMPLE ID	SAMPLE INTERVALS	SAMPLE DATE	PARAMETER	FILTER FLAG	RESULTS	VAL QUAL	Background Concentration	UNITS
GENERAL CHEMISTRY (Continued)									
1039	003928	-	05-FEB-89	Total Organic Nitrogen	UNFL	.103	J	.000	mg/L
1041	003180	-	11-MAY-88	Chloride	UNFL	495.000	-	110.159	mg/L
1041	003180	-	11-MAY-88	Phosphorus	UNFL	.270	J	.223	mg/L
1041	003490	-	10-AUG-88	Chloride	*U	170.000	-	110.159	mg/L
1041	003490	-	10-AUG-88	Fluoride	UNFL	1.800	-	1.352	mg/L
1041	003732	-	17-NOV-88	Chloride	UNFL	259.000	J	110.159	mg/L
1041	003732	-	17-NOV-88	Total Organic Nitrogen	UNFL	.700	-	.000	mg/L
1041	003732	-	17-NOV-88	Total Kjeldahl Nitrogen	UNFL	.820	J	.000	mg/L
1041	003732	-	17-NOV-88	Phosphorus	UNFL	.536	J	.223	mg/L
1041	003924	-	01-MAR-89	Chloride	UNFL	230.000	-	110.159	mg/L
1042	003416	-	09-AUG-88	Fluoride	UNFL	1.400	-	1.352	mg/L
1042	003723	-	17-NOV-88	Phosphorus	UNFL	.872	J	.223	mg/L
1042	003723	-	17-NOV-88	Sulfate	UNFL	246.000	J	141.894	mg/L
1042	003723	-	17-NOV-88	Total Organic Nitrogen	UNFL	.510	-	.000	mg/L
1042	003723	-	17-NOV-88	Total Kjeldahl Nitrogen	UNFL	.510	J	.000	mg/L

[a]Background concentrations established for metals are filtered while all other background parameters are unfiltered.

FLTR = Filtered sample; filtered status identified on Request for Analysis/Chain of Custody

UNFL = Unfiltered sample; filtered status identified on Request for Analysis/Chain of Custody

UNKN = Unknown; filtered status could not be determined.

*F = Filtered sample; filtered status not identified on Request for Analysis/Chain of Custody; determination based upon other field investigation documentation.

*U = Unfiltered sample; filtered status not identified on Request for Analysis/Chain of Custody; determination based upon other field investigation documentation.

N/A = Not Applicable

TABLE D-2G

LIME SLUDGE POND
CONCENTRATIONS OF DETECTED ANALYTES
ABOVE BACKGROUND[a] IN GROUNDWATER - 1000 SERIES
PHASE II FIELD INVESTIGATION
OPERABLE UNIT 2 REMEDIAL INVESTIGATION
FERNALD ENVIRONMENTAL MANAGEMENT PROJECT

SAMPLE LOCATION	SAMPLE ID	SAMPLE INTERVALS	SAMPLE DATE	PARAMETER	FILTER FLAG	DUPS	RESULTS	VAL QUAL	BACKGROUND	UNITS
METALS										
1039	111990	-	28-APR-93	Manganese	FLTR		.418	-	.165	mg/L
1039	111990	-	28-APR-93	Silicon	FLTR		5.680	-	0	mg/L
1039	111990	-	28-APR-93	Sodium	FLTR		157.000	-	49.178	mg/L
1041	116220	-	05-MAY-93	Aluminum	UNFL		8.600	-	.123	mg/L
1041	116220	-	05-MAY-93	Beryllium	UNFL		.002	-	.0018	mg/L
1041	116220	-	05-MAY-93	Calcium	UNFL		170.000	-	125.574	mg/L
1041	116220	-	05-MAY-93	Cobalt	UNFL		.009	-	0	mg/L
1041	116220	-	05-MAY-93	Iron	UNFL		17.600	-	10.965	mg/L
1041	116220	-	05-MAY-93	Magnesium	UNFL		65.100	-	49.627	mg/L
1041	116220	-	05-MAY-93	Manganese	UNFL		1.210	-	.165	mg/L
1041	116220	-	05-MAY-93	Zinc	UNFL		.064	-	.0317	mg/L
1041	116220	-	05-MAY-93	Vanadium	UNFL		.027	-	.0195	mg/L
1041	116220	-	05-MAY-93	Silicon	UNFL		17.900	-	0	mg/L
1041	116220	-	05-MAY-93	Nickel	UNFL		.029	-	.026	mg/L
1041	116221	-	05-MAY-93	Calcium	FLTR		127.000	-	125.574	mg/L
1041	116221	-	05-MAY-93	Silicon	FLTR		5.370	-	0	mg/L
1041	116221	-	05-MAY-93	Magnesium	FLTR		55.500	-	49.627	mg/L
1041	116221	-	05-MAY-93	Manganese	FLTR		.176	-	.165	mg/L
1042	110889	-	22-APR-93	Calcium	FLTR		138.000	J	125.574	mg/L
1042	110889	-	22-APR-93	Magnesium	FLTR		56.600	J	49.627	mg/L
1042	110889	-	22-APR-93	Silicon	FLTR		5.280	-	0	mg/L
1934	114620	-	13-MAY-93	Magnesium	UNFL		69.100	-	49.627	mg/L
1934	114620	-	13-MAY-93	Silicon	UNFL		6.030	-	0	mg/L
1934	114622	-	13-MAY-93	Aluminum	UNFL	DUP	49.800	-	.123	mg/L
1934	114622	-	13-MAY-93	Zinc	UNFL	DUP	.284	-	.0317	mg/L
1934	114622	-	13-MAY-93	Vanadium	UNFL	DUP	.125	-	.0195	mg/L
1934	114622	-	13-MAY-93	Silicon	UNFL	DUP	71.300	-	0	mg/L
1934	114622	-	13-MAY-93	Nickel	UNFL	DUP	.108	-	.026	mg/L
1934	114622	-	13-MAY-93	Manganese	UNFL	DUP	3.060	-	.165	mg/L
1934	114622	-	13-MAY-93	Magnesium	UNFL	DUP	325.000	-	49.627	mg/L
1934	114622	-	13-MAY-93	Lead	UNFL	DUP	.051	-	.05	mg/L
1934	114622	-	13-MAY-93	Iron	UNFL	DUP	94.800	-	10.965	mg/L

See footnotes at end of table

TABLE D-2G
(Continued)

SAMPLE LOCATION	SAMPLE ID	SAMPLE INTERVALS	SAMPLE DATE	PARAMETER	FILTER FLAG	DUPS	RESULTS	VAL QUAL	BACKGROUND	UNITS
METALS (Continued)										
1934	114622	-	13-MAY-93	Calcium	UNFL	DUP	781.000	-	125.574	mg/L
1934	114622	-	13-MAY-93	Beryllium	UNFL	DUP	.007	-	.0018	mg/L
1934	114622	-	13-MAY-93	Copper	UNFL	DUP	.113	-	.03	mg/L
1934	114622	-	13-MAY-93	Cobalt	UNFL	DUP	.048	-	0	mg/L
1934	114622	-	13-MAY-93	Chromium	UNFL	DUP	.064	-	.0345	mg/L
1937	114617	-	11-MAY-93	Calcium	UNFL		214.000	-	125.574	mg/L
1937	114617	-	11-MAY-93	Sodium	UNFL		146.000	-	49.178	mg/L
1937	114617	-	11-MAY-93	Silicon	UNFL		5.950	-	0	mg/L
1937	114617	-	11-MAY-93	Manganese	UNFL		.612	-	.165	mg/L
1937	114617	-	11-MAY-93	Magnesium	UNFL		82.000	-	49.627	mg/L
1937	114782	-	01-JUN-93	Aluminum	UNFL		15.400	-	.123	mg/L
1937	114782	-	01-JUN-93	Magnesium	UNFL		144.000	-	49.627	mg/L
1937	114782	-	01-JUN-93	Vanadium	UNFL		.038	-	.0195	mg/L
1937	114782	-	01-JUN-93	Zinc	UNFL		.065	J	.0317	mg/L
1937	114782	-	01-JUN-93	Sodium	UNFL		156.000	-	49.178	mg/L
1937	114782	-	01-JUN-93	Silicon	UNFL		31.000	J	0	mg/L
1937	114782	-	01-JUN-93	Iron	UNFL		23.700	-	10.965	mg/L
1937	114782	-	01-JUN-93	Calcium	UNFL		446.000	-	125.574	mg/L
1937	114782	-	01-JUN-93	Manganese	UNFL		1.290	-	.165	mg/L
1937	114782	-	01-JUN-93	Nickel	UNFL		.029	J	.026	mg/L
1940	114784	-	11-JUN-93	Aluminum	UNFL		.786	-	.123	mg/L
1940	114784	-	11-JUN-93	Sodium	UNFL		59.400	-	49.178	mg/L
1940	114784	-	11-JUN-93	Silicon	UNFL		7.900	-	0	mg/L
1940	114784	-	11-JUN-93	Magnesium	UNFL		56.400	-	49.627	mg/L
1940	114784	-	11-JUN-93	Calcium	UNFL		146.000	-	125.574	mg/L
1940	114784	-	11-JUN-93	Manganese	UNFL		.298	-	.165	mg/L
1940	114784	-	11-JUN-93	Nickel	UNFL		.042	-	.026	mg/L
1940	114785	-	11-JUN-93	Aluminum	UNFL		13.100	-	.123	mg/L
1940	114785	-	11-JUN-93	Copper	UNFL		.328	-	.03	mg/L
1940	114785	-	11-JUN-93	Calcium	UNFL		283.000	-	125.574	mg/L
1940	114785	-	11-JUN-93	Zinc	UNFL		.105	-	.0317	mg/L
1940	114785	-	11-JUN-93	Vanadium	UNFL		.029	-	.0195	mg/L
1940	114785	-	11-JUN-93	Sodium	UNFL		60.500	-	49.178	mg/L
1940	114785	-	11-JUN-93	Silicon	UNFL		26.400	-	0	mg/L
1940	114785	-	11-JUN-93	Nickel	UNFL		.028	-	.026	mg/L
1940	114785	-	11-JUN-93	Manganese	UNFL		.815	-	.165	mg/L
1940	114785	-	11-JUN-93	Magnesium	UNFL		104.000	-	49.627	mg/L
1940	114785	-	11-JUN-93	Iron	UNFL		26.400	-	10.965	mg/L

See footnotes at end of table

TABLE D-2G
(Continued)

SAMPLE LOCATION	SAMPLE ID	SAMPLE INTERVALS	SAMPLE DATE	PARAMETER	FILTER FLAG	DUPS	RESULTS	VAL QUAL	BACKGROUND	UNITS
RADIONUCLIDES										
1041	116220	-	05-MAY-93	GROSS BETA	UNFL		15.300	J	0	pCi/L
1041	116220	-	05-MAY-93	TH-232	UNFL		.740	J	0	pCi/L
1041	116220	-	05-MAY-93	U-TOTAL	UNFL		7.800	-	4	ug/L
1041	116220	-	05-MAY-93	U-238	UNFL		3.330	-	1.07	pCi/L
1041	116220	-	05-MAY-93	U-235/236	UNFL		.180	J	0	pCi/L
1041	116220	-	05-MAY-93	U-234	UNFL		3.020	-	1.9	pCi/L
1041	116220	-	05-MAY-93	TH-TOTAL	UNFL		6.830	-	3	ug/L
1041	116221	-	05-MAY-93	U-234	FLTR		2.450	-	1.9	pCi/L
1041	116221	-	05-MAY-93	U-235/236	FLTR		.180	-	0	pCi/L
1041	116221	-	05-MAY-93	U-TOTAL	FLTR		8.300	-	4	ug/L
1041	116221	-	05-MAY-93	U-238	FLTR		2.720	-	1.07	pCi/L
1042	110889	-	22-APR-93	GROSS ALPHA	UNFL		27.120	J	0	pCi/L
1042	110889	-	22-APR-93	U-TOTAL	UNFL		30.400	-	4	ug/L
1042	110889	-	22-APR-93	U-238	UNFL		11.810	J	1.07	pCi/L
1042	110889	-	22-APR-93	SR-90	UNFL		3.450	J	0	pCi/L
1042	110889	-	22-APR-93	U-234	UNFL		11.020	J	1.9	pCi/L
1042	110889	-	22-APR-93	U-235/236	UNFL		.700	J	0	pCi/L
1934	114620	-	13-MAY-93	NP-237	UNFL		.147	N	0	pCi/L
1934	114620	-	13-MAY-93	U-235/236	UNFL		.176	-	0	pCi/L
1934	114620	-	13-MAY-93	U-TOTAL	UNFL		4.770	-	4	ug/L
1934	114620	-	13-MAY-93	U-238	UNFL		1.890	-	1.07	pCi/L
1934	114622	-	13-MAY-93	GROSS ALPHA	UNFL	DUP	23.800	J	0	pCi/L
1934	114622	-	13-MAY-93	U-TOTAL	UNFL	DUP	17.500	-	4	ug/L
1934	114622	-	13-MAY-93	U-238	UNFL	DUP	5.750	-	1.07	pCi/L
1934	114622	-	13-MAY-93	U-235/236	UNFL	DUP	.250	-	0	pCi/L
1934	114622	-	13-MAY-93	U-234	UNFL	DUP	6.690	-	1.9	pCi/L
1934	114622	-	13-MAY-93	TH-TOTAL	UNFL	DUP	23.900	-	3	ug/L
1934	114622	-	13-MAY-93	TH-232	UNFL	DUP	2.600	-	0	pCi/L
1934	114622	-	13-MAY-93	TH-230	UNFL	DUP	6.670	-	2	pCi/L
1934	114622	-	13-MAY-93	TH-228	UNFL	DUP	2.870	-	1.04	pCi/L
1934	114622	-	13-MAY-93	GROSS BETA	UNFL	DUP	31.600	J	0	pCi/L
1934	114622	-	13-MAY-93	RA-226	UNFL	DUP	1.400	-	1	pCi/L
1934	114622	-	13-MAY-93	NP-237	UNFL	DUP	.839	N	0	pCi/L
1937	114617	-	11-MAY-93	TH-230	UNFL		3.040		2	pCi/L
1937	114617	-	11-MAY-93	U-TOTAL	UNFL		5.160	-	4	ug/L
1937	114617	-	11-MAY-93	U-238	UNFL		2.130	-	1.07	pCi/L
1937	114617	-	11-MAY-93	U-234	UNFL		2.420	J	1.9	pCi/L
1937	114617	-	11-MAY-93	U-235/236	UNFL		.078	J	0	pCi/L
1937	114782	-	01-JUN-93	GROSS ALPHA	UNFL		42.800	J	0	pCi/L

See footnotes at end of table

000574

TABLE D-2G
(Continued)

SAMPLE LOCATION	SAMPLE ID	SAMPLE INTERVALS	SAMPLE DATE	PARAMETER	FILTER FLAG	DUPS	RESULTS	VAL QUAL	BACKGROUND	UNITS
RADIONUCLIDES (Continued)										
1937	114782	-	01-JUN-93	U-TOTAL	UNFL		6.480	-	4	ug/L
1937	114782	-	01-JUN-93	U-238	UNFL		3.190	-	1.07	pCi/L
1937	114782	-	01-JUN-93	U-235/236	UNFL		.165	J	0	pCi/L
1937	114782	-	01-JUN-93	U-234	UNFL		3.170	-	1.9	pCi/L
1937	114782	-	01-JUN-93	TH-TOTAL	UNFL		17.400	-	3	ug/L
1937	114782	-	01-JUN-93	TH-232	UNFL		1.910	-	0	pCi/L
1937	114782	-	01-JUN-93	TH-230	UNFL		2.740	J	2	pCi/L
1937	114782	-	01-JUN-93	TH-228	UNFL		2.370	-	1.04	pCi/L
1940	114784	-	11-JUN-93	NP-237	UNFL		.339	N	0	pCi/L
1940	114784	-	11-JUN-93	U-234	UNFL		3.140	-	1.9	pCi/L
1940	114784	-	11-JUN-93	U-TOTAL	UNFL		6.300	-	4	ug/L
1940	114784	-	11-JUN-93	U-238	UNFL		2.580	-	1.07	pCi/L
1940	114784	-	11-JUN-93	U-235/236	UNFL		.076	J	0	pCi/L
1940	114785	-	11-JUN-93	GROSS BETA	UNFL		20.900	J	0	pCi/L
1940	114785	-	11-JUN-93	U-TOTAL	UNFL		7.620	-	4	ug/L
1940	114785	-	11-JUN-93	U-238	UNFL		3.670	-	1.07	pCi/L
1940	114785	-	11-JUN-93	TH-228	UNFL		1.360	-	1.04	pCi/L
1940	114785	-	11-JUN-93	TH-232	UNFL		.756	J	0	pCi/L
1940	114785	-	11-JUN-93	U-234	UNFL		3.340	-	1.9	pCi/L
1940	114785	-	11-JUN-93	U-235/236	UNFL		.212	J	0	pCi/L
1940	114785	-	11-JUN-93	TH-TOTAL	UNFL		6.890	-	3	ug/L
1940	114785	-	11-JUN-93	RA-226	UNFL		1.210	J	1	pCi/L
SEMIVOLATILE ORGANICS										
1041	116220	-	05-MAY-93	bis(2-Ethylhexyl) phthalate	UNFL		2.000	J	0	ug/L
1937	114617	-	11-MAY-93	bis(2-Ethylhexyl) phthalate	UNFL		1.000	J	0	ug/L
GENERAL CHEMISTRY										
1039	111990	-	28-APR-93	Chloride	UNFL		360.230	-	110.159	mg/L
1039	111990	-	28-APR-93	Total Organic Nitrogen	UNFL		.130	-	0	mg/L
1039	111990	-	28-APR-93	Total Organic Halides	UNFL		.028	-	0	mg/L
1039	111990	-	28-APR-93	Total Organic Carbon	UNFL		1.220	-	0	mg/L
1039	111990	-	28-APR-93	Total Kjeldahl Nitrogen	UNFL		.130	-	0	mg/L
1041	116220	-	05-MAY-93	Total Kjeldahl Nitrogen	UNFL		.180	-	0	mg/L
1041	116220	-	05-MAY-93	Total Organic Nitrogen	UNFL		.180	-	0	mg/L
1041	116220	-	05-MAY-93	Total Organic Halides	UNFL		.030	J	0	mg/L
1041	116220	-	05-MAY-93	Total Organic Carbon	UNFL		1.040	-	0	mg/L
1042	110889	-	22-APR-93	Total Organic Carbon	UNFL		1.400	-	0	mg/L
1934	114620	-	13-MAY-93	Total Kjeldahl Nitrogen	UNFL		.500	-	0	mg/L
1934	114620	-	13-MAY-93	Total Organic Carbon	UNFL		1.570	-	0	mg/L

See footnotes at end of table

FER\CRU2RI\TDO\APP-D\TABD-2G\January 19, 1995 2:45pm

000625
6508

TABLE D-2G
(Continued)

SAMPLE LOCATION	SAMPLE ID	SAMPLE INTERVALS	SAMPLE DATE	PARAMETER	FILTER FLAG	DUPS	RESULTS	VAL QUAL	BACKGROUND	UNITS
GENERAL CHEMISTRY (Continued)										
1934	114620	-	13-MAY-93	Total Organic Nitrogen	UNFL		1.200	-	0	mg/L
1934	114620	-	13-MAY-93	Total Organic Halides	UNFL		.018	-	0	mg/L
1937	114617	-	11-MAY-93	Chloride	UNFL		573.800	-	110.159	mg/L
1937	114617	-	11-MAY-93	Total Organic Nitrogen	UNFL		.150	-	0	mg/L
1937	114617	-	11-MAY-93	Total Organic Halides	UNFL		.067	-	0	mg/L
1937	114617	-	11-MAY-93	Total Kjeldahl Nitrogen	UNFL		.290	-	0	mg/L
1937	114626	-	01-JUN-93	Total Organic Carbon	UNFL		1.650	-	0	mg/L
1940	114784	-	11-JUN-93	Chloride	UNFL		180.780	-	110.159	mg/L
1940	114784	-	11-JUN-93	Total Organic Carbon	UNFL		1.220	-	0	mg/L
1940	114784	-	11-JUN-93	Sulfate	UNFL		147.500	-	141.894	mg/L
1940	114784	-	11-JUN-93	Total Organic Nitrogen	UNFL		.380	-	0	mg/L
1940	114784	-	11-JUN-93	Total Organic Halides	UNFL		.032	J	0	mg/L
1940	114784	-	11-JUN-93	Total Kjeldahl Nitrogen	UNFL		.380	-	0	mg/L

[a]Background concentrations established for metals are filtered while all other background parameters are unfiltered.

FLTR = Filtered sample; filtered status identified on Request for Analysis/Chain of Custody

UNFL = Unfiltered sample; filtered status identified on Request for Analysis/Chain of Custody

DUP = Duplicate Sample

000576

TABLE D-2H

LIME SLUDGE POND
CONCENTRATIONS OF DETECTED ANALYTES
ABOVE BACKGROUND[a] IN GROUNDWATER
GREAT MIAMI AQUIFER - PHASE I FIELD INVESTIGATION
OPERABLE UNIT 2 REMEDIAL INVESTIGATION
FERNALD ENVIRONMENTAL MANAGEMENT PROJECT

SAMPLE LOCATION	SAMPLE ID	SAMPLE INTERVALS	SAMPLE DATE	PARAMETER	FILTER FLAG	DUPS	RESULTS	VAL QUAL	BACKGROUND	UNITS
METALS										
2042	003415	-	09-AUG-88	Antimony	FLTR		.060	-	.038	mg/L
2042	004036	-	01-MAR-89	Calcium	FLTR	DUP	160.000	-	135.163	mg/L
2042	004036	-	01-MAR-89	Potassium	FLTR	DUP	3.700	-	3.087	mg/L
4101	003207	-	19-MAY-88	Iron	FLTR		5.840	-	4	mg/L
4101	003207	-	19-MAY-88	Potassium	FLTR		4.870	-	3.087	mg/L
4101	003208	-	19-MAY-88	Iron	FLTR	DUP	5.630	-	4	mg/L
4101	003208	-	19-MAY-88	Potassium	FLTR	DUP	3.880	-	3.087	mg/L
4101	003208	-	19-MAY-88	Molybdenum	FLTR	DUP	.028	-	.027	mg/L
4101	003719	-	18-NOV-88	Iron	FLTR		4.940	-	4	mg/L
4101	003719	-	18-NOV-88	Potassium	FLTR		4.120	-	3.087	mg/L
4101	003918	-	15-MAR-89	Iron	FLTR		4.230	-	4	mg/L
4101	003918	-	15-MAR-89	Potassium	FLTR		3.440	-	3.087	mg/L
RADIONUCLIDES										
2042	003150	-	04-MAY-88	TH-228	*U		1.600	J	1.52	pCi/L
2042	003150	-	04-MAY-88	U-TOTAL	*U		4.000	J	2.92	ug/L
2042	003150	-	04-MAY-88	U-238	*U		1.500	J	.9	pCi/L
2042	003921	-	01-MAR-89	U-TOTAL	*U		3.000	-	2.92	ug/L
2042	004036	-	01-MAR-89	U-TOTAL	*U	DUP	3.000	-	2.92	ug/L
2042	066845	-	05-JAN-90	U-238	UNKN		1.870	-	.9	pCi/L
2042	066845	-	05-JAN-90	U-TOTAL	UNKN		7.450	J	2.92	ug/L
4102	003919	-	23-FEB-89	U-238	*U		1.000	-	.9	pCi/L
VOLATILE ORGANICS										
2042	003150	-	04-MAY-88	Acetone	UNFL		7.000	J	0	ug/L
SEMIVOLATILE ORGANICS										
2042	003415	-	09-AUG-88	Phenol	UNFL		50.000	-	0	ug/L

See footnotes at end of table

FER\CRU2RI\TDO\APP-D\TABD-2H\January 6, 1995 10:50am

000672

6508

TABLE D-2H
(Continued)

SAMPLE LOCATION	SAMPLE ID	SAMPLE INTERVALS	SAMPLE DATE	PARAMETER	FILTER FLAG	DUPS	RESULTS	VAL QUAL	BACKGROUND	UNITS
GENERAL CHEMISTRY										
2042	003415	-	09-AUG-88	Fluoride	UNFL		1.200	-	.938	mg/L
2042	003921	-	01-MAR-89	Total Kjeldahl Nitrogen	UNFL		.600	-	0	mg/L
4101	003207	-	19-MAY-88	Ammonia	UNFL		3.600	J	3.24	mg/L
4101	003208	-	19-MAY-88	Total Organic Nitrogen	UNFL	DUP	3.500	J	.652	mg/L
4101	003719	-	18-NOV-88	Ammonia	UNFL		6.630	-	3.24	mg/L
4101	003719	-	18-NOV-88	Total Kjeldahl Nitrogen	UNFL		6.790	-	0	mg/L
4101	003918	-	15-MAR-89	Ammonia	UNFL		5.130	J	3.24	mg/L
4101	003918	-	15-MAR-89	Total Kjeldahl Nitrogen	UNFL		3.480	J	0	mg/L
4102	003720	-	18-NOV-88	Total Kjeldahl Nitrogen	UNFL		.580	-	0	mg/L
4102	003919	-	23-FEB-89	Total Kjeldahl Nitrogen	UNFL		.800	J	0	mg/L

[a]Background concentrations established for metals are filtered while all other background parameters are unfiltered.

FLTR = Filtered sample; filtered status identified on Request for Analysis/Chain of Custody

UNFL = Unfiltered sample; filtered status identified on Request for Analysis/Chain of Custody

UNKN = Unknown; filtered status could not be determined.

DUP = Duplicate Sample

*U = Unfiltered sample; filtered status not identified on Request for Analysis/Chain of Custody; determination based upon other field investigation documentation.

TABLE D-2I

LIME SLUDGE POND
CONCENTRATIONS OF DETECTED ANALYTES
ABOVE BACKGROUND[a] IN GROUNDWATER
GREAT MIAMI AQUIFER - PHASE II FIELD INVESTIGATION
OPERABLE UNIT 2 REMEDIAL INVESTIGATION
FERNALD ENVIRONMENTAL MANAGEMENT PROJECT

SAMPLE LOCATION	SAMPLE ID	SAMPLE INTERVALS	SAMPLE DATE	PARAMETER	FILTER FLAG	DUPS	RESULTS	VAL QUAL	BACKGROUND	UNITS
METALS										
2042	110989	-	04-MAY-93	Manganese	UNFL		1.290	J	.8	mg/L
2042	110989	-	04-MAY-93	Potassium	UNFL		3.160	-	3.087	mg/L
2042	110990	-	04-MAY-93	Potassium	UNFL		3.100	-	3.087	mg/L
2042	110994	-	04-MAY-93	Cobalt	UNFL	DUP	.005	-	0	mg/L
2042	110994	-	04-MAY-93	Manganese	UNFL	DUP	2.080	J	.8	mg/L
2042	110994	-	04-MAY-93	Iron	UNFL	DUP	4.720	J	4	mg/L
2042	110995	-	04-MAY-93	Potassium	FLTR	DUP	3.160	-	3.087	mg/L
2935	114921	-	13-JUN-93	Aluminum	UNFL		.260	-	.184	mg/L
2936	114917	-	12-JUN-93	Potassium	UNFL	DUP	5.460	J	3.087	mg/L
RADIONUCLIDES										
2042	110989	-	04-MAY-93	GROSS BETA	UNFL		5.230	J	0	pCi/L
2042	110989	-	04-MAY-93	U-235/236	UNFL		.160	J	0	pCi/L
2042	110989	-	04-MAY-93	U-238	UNFL		1.230	-	.9	pCi/L
2042	110989	-	04-MAY-93	NP-237	UNFL		.100	N	0	pCi/L
2042	110989	-	04-MAY-93	PU-238	UNFL		.050	J	0	pCi/L
2042	110990	-	04-MAY-93	U-238	FLTR		1.310	-	.9	pCi/L
2042	110990	-	04-MAY-93	U-TOTAL	FLTR		3.100	-	2.92	ug/L
2042	110994	-	04-MAY-93	GROSS BETA	UNFL	DUP	7.880	J	0	pCi/L
2042	110994	-	04-MAY-93	U-TOTAL	UNFL	DUP	3.390	-	2.92	ug/L
2042	110994	-	04-MAY-93	U-238	UNFL	DUP	1.430	-	.9	pCi/L
2042	110994	-	04-MAY-93	NP-237	UNFL	DUP	.360	N	0	pCi/L
2042	110994	-	04-MAY-93	PU-238	UNFL	DUP	.190	J	0	pCi/L
2042	110995	-	04-MAY-93	NP-237	FLTR	DUP	.360	N	0	pCi/L
2042	110995	-	04-MAY-93	TH-232	FLTR	DUP	.110	J	0	pCi/L
2042	110995	-	04-MAY-93	U-238	FLTR	DUP	1.080	-	.9	pCi/L
2935	114921	-	13-JUN-93	NP-237	FLTR		.400	N	0	pCi/L
2935	114921	-	13-JUN-93	U-235/236	UNFL		.076	J	0	pCi/L
2935	114921	-	13-JUN-93	U-235/236	FLTR		.115	J	0	pCi/L
2935	114921	-	13-JUN-93	U-238	UNFL		1.230	-	.9	pCi/L
2935	114921	-	13-JUN-93	U-238	FLTR		1.180	-	.9	pCi/L
2935	114921	-	13-JUN-93	PU-238	FLTR		.062	J	0	pCi/L
2935	114921	-	13-JUN-93	PU-238	UNFL		.050	J	0	pCi/L

See footnote at end of table

TABLE D-2I
(Continued)

SAMPLE LOCATION	SAMPLE ID	SAMPLE INTERVALS	SAMPLE DATE	PARAMETER	FILTER FLAG	DUPS	RESULTS	VAL QUAL	BACKGROUND	UNITS
RADIONUCLIDES (Continued)										
2936	114788	-	12-JUN-93	NP-237	UNFL		.520	J	0	pCi/L
2936	114788	-	12-JUN-93	U-238	UNFL		1.940	J	.9	pCi/L
2936	114788	-	12-JUN-93	U-TOTAL	UNFL		3.640	J	2.92	ug/L
2936	114789	-	12-JUN-93	U-238	UNFL		1.390	J	.9	pCi/L
2936	114789	-	12-JUN-93	U-TOTAL	UNFL		3.790	J	2.92	ug/L
2936	114917	-	12-JUN-93	NP-237	UNFL	DUP	.295	N	0	pCi/L
2936	114917	-	12-JUN-93	PU-238	UNFL	DUP	.174	J	0	pCi/L
2936	114917	-	12-JUN-93	U-TOTAL	UNFL	DUP	3.430	-	2.92	ug/L
2936	114917	-	12-JUN-93	U-238	UNFL	DUP	1.290	-	.9	pCi/L
2936	114917	-	12-JUN-93	U-235/236	UNFL	DUP	.201	J	0	pCi/L
2936	114918	-	12-JUN-93	GROSS BETA	UNFL	DUP	5.610	J	0	pCi/L
2936	114918	-	12-JUN-93	U-TOTAL	UNFL	DUP	3.490	-	2.92	ug/L
2936	114918	-	12-JUN-93	U-238	UNFL	DUP	1.230	-	.9	pCi/L
2936	114918	-	12-JUN-93	U-235/236	UNFL	DUP	.167	J	0	pCi/L
2936	114918	-	12-JUN-93	NP-237	UNFL	DUP	.317	N	0	pCi/L
2939	114924	-	13-JUN-93	GROSS BETA	FLTR		6.180	J	0	pCi/L
2939	114924	-	13-JUN-93	U-235/236	FLTR		.072	J	0	pCi/L
2939	114924	-	13-JUN-93	NP-237	FLTR		.376	N	0	pCi/L
2939	114924	-	13-JUN-93	GROSS BETA	UNFL		5.080	J	0	pCi/L
SEMIVOLATILE ORGANICS										
2935	114921	-	13-JUN-93	Butyl benzyl phthalate	UNFL		2.000	J	0	ug/L
2936	114788	-	12-JUN-93	Butyl benzyl phthalate	UNFL		2.000	J	0	ug/L
2936	114917	-	12-JUN-93	Butyl benzyl phthalate	UNFL	DUP	1.000	J	0	ug/L
2939	114924	-	13-JUN-93	Butyl benzyl phthalate	UNFL		1.000	J	0	ug/L
GENERAL CHEMISTRY										
2042	110989	-	04-MAY-93	Total Kjeldahl Nitrogen	UNFL		.110	-	0	mg/L

[a]Background concentrations established for metals are filtered while all other background parameters are unfiltered.

FLTR = Filtered sample; filtered status identified on Request for Analysis/Chain of Custody

UNFL = Unfiltered sample; filtered status identified on Request for Analysis/Chain of Custody

DUP = Duplicate Sample

TABLE D-3

TABLE D-3A

LIME SLUDGE PONDS
RI/FS SURFACE SOIL RESULTS
OPERABLE UNIT 2 REMEDIAL INVESTIGATION
FERNALD ENVIRONMENTAL MANAGEMENT PROJECT

PHASE II - RADIOLOGICAL PARAMETERS

BORING NUMBER	LSP-TR-01			LSP-TR-02			LSP-SS-03		
SAMPLE NUMBER	114589			114591			114467		
	0 - 0.5			0 - 0.5			0 - 0.5		
SAMPLING DATE	05/16/93			05/16/93			05/01/93		
RADIOLOGICAL PARAMETERS	RESULTS	UNITS	VQ	RESULTS	UNITS	VQ	RESULTS	UNITS	VQ
CS-137	0.180	pci/g	J	0.120	pci/g	J	0.210	pci/g	-
GROSS ALPHA	78.200	pci/g	J	93.500	pci/g	J	28.480	pci/g	J
GROSS BETA	77.100	pci/g	J	57.100	pci/g	J	40.640	pci/g	J
NP-237	0.160	pci/g	N	0.210	pci/g	N	0.160	pci/g	N
PU-238	0.069	pci/g	J	0.057	pci/g	UJ	0.040	pci/g	J
PU-239/240	0.470	pci/g	J	0.470	pci/g	UJ	0.037	pci/g	J
RA-226	3.150	pci/g	-	3.480	pci/g	-	1.080	pci/g	J
RA-228	2.000	pci/g	-	1.800	pci/g	-	1.420	pci/g	-
RU-106	0.820	pci/g	UJ	0.690	pci/g	UJ	0.700	pci/g	UJ
SR-90	0.217	pci/g	UJ	0.210	pci/g	UJ	0.235	pci/g	UJ
TC-99	1.050	pci/g	J	1.790	pci/g	J	0.342	pci/g	UJ
TH-228	1.750	pci/g	-	1.540	pci/g	-	0.950	pci/g	-
TH-230	9.790	pci/g	-	16.230	pci/g	-	2.640	pci/g	-
TH-232	0.950	pci/g	-	0.920	pci/g	-	1.130	pci/g	-
TH-TOTAL	8.630	ug/g	-	8.410	ug/g	-	10.300	ug/g	-
U-234	19.500	pci/g	-	13.400	pci/g	-	8.000	pci/g	J
U-235/236	1.313	pci/g	-	0.770	pci/g	-	0.414	pci/g	J
U-238	20.400	pci/g	-	14.800	pci/g	-	8.490	pci/g	J
U-TOTAL	51.600	mg/kg	J	45.000	mg/kg	J	35.800	mg/kg	-

TABLE D-3A
(Continued)

PHASE II - RADIOLOGICAL PARAMETERS

BORING NUMBER	LSP-SS-04			LSP-SS-05			LSP-SS-06		
SAMPLE NUMBER	114474			114485			114487		
	0 - 0.5			0 - 0.5			0 - 0.5		
SAMPLING DATE	05/02/93			05/03/93			05/03/93		
RADIOLOGICAL PARAMETERS	RESULTS	UNITS	VQ	RESULTS	UNITS	VQ	RESULTS	UNITS	VQ
CS-137	0.192	pci/g	J	0.145	pci/g	J	0.085	pci/g	UJ
GROSS ALPHA	20.600	pci/g	J	12.900	pci/g	J	9.500	pci/g	UJ
GROSS BETA	32.900	pci/g	J	17.600	pci/g	J	7.740	pci/g	J
NP-237	0.041	pci/g	N	0.590	pci/g	N	0.050	pci/g	N
PU-238	0.051	pci/g	J	0.662	pci/g	-	0.240	pci/g	J
PU-239/240	0.052	pci/g	J	0.200	pci/g	J	0.030	pci/g	J
RA-226	1.230	pci/g	J	0.210	pci/g	UJ	0.392	pci/g	J
RA-228	1.350	pci/g	-	0.460	pci/g	UJ	0.460	pci/g	UJ
RU-106	0.830	pci/g	UJ	0.680	pci/g	UJ	0.074	pci/g	UJ
SR-90	0.419	pci/g	UJ	0.458	pci/g	UJ	0.352	pci/g	UJ
TC-99	0.403	pci/g	UJ	0.372	pci/g	UJ	0.352	pci/g	UJ
TH-228	0.980	pci/g	-	0.310	pci/g	UJ	0.230	pci/g	J
TH-230	3.000	pci/g	-	2.000	pci/g	-	0.890	pci/g	-
TH-232	1.010	pci/g	-	0.224	pci/g	UJ	0.220	pci/g	J
TH-TOTAL	9.730	ug/g	-	7.120	ug/g	-	1.970	ug/g	-
U-234	5.580	pci/g	J	6.090	pci/g	J	2.440	pci/g	J
U-235/236	0.290	pci/g	J	0.335	pci/g	J	0.103	pci/g	J
U-238	6.540	pci/g	J	6.670	pci/g	J	2.120	pci/g	J
U-TOTAL	28.900	mg/kg	-	20.500	mg/kg	-	14.300	mg/kg	J

TABLE D-3A
(Continued)

PHASE II - RADIOLOGICAL PARAMETERS

BORING NUMBER	LSP-SS-07			LSP-SS-08			LSP-SS-09		
SAMPLE NUMBER	114477			114488			114598		
	0 - 0.5			0 - 0.5			0 - 0.5		
SAMPLING DATE	05/02/93			05/03/93			05/19/93		
RADIOLOGICAL PARAMETERS	RESULTS	UNITS	VQ	RESULTS	UNITS	VQ	RESULTS	UNITS	VQ
CS-137	0.064	pci/g	J	0.280	pci/g	-	0.090	pci/g	UJ
GROSS ALPHA	99.650	pci/g	-	23.600	pci/g	J	9.440	pci/g	UJ
GROSS BETA	42.740	pci/g	-	34.700	pci/g	J	7.980	pci/g	J
NP-237	0.096	pci/g	N	0.040	pci/g	N	0.040	pci/g	N
PU-238	0.057	pci/g	J	0.040	pci/g	J	0.030	pci/g	UJ
PU-239/240	0.042	pci/g	J	0.051	pci/g	J	0.030	pci/g	UJ
RA-226	2.450	pci/g	-	1.170	pci/g	J	0.200	pci/g	UJ
RA-228	1.470	pci/g	-	1.110	pci/g	-	0.420	pci/g	UJ
RU-106	0.650	pci/g	UJ	0.820	pci/g	UJ	0.870	pci/g	UJ
SR-90	0.480	pci/g	UJ	0.412	pci/g	UJ	NA		
TC-99	0.390	pci/g	UJ	0.347	pci/g	UJ	0.380	pci/g	UJ
TH-228	0.936	pci/g	-	1.060	pci/g	-	0.110	pci/g	R
TH-230	44.800	pci/g	-	2.400	pci/g	-	0.250	pci/g	R
TH-232	0.930	pci/g	-	0.870	pci/g	-	0.150	pci/g	R
TH-TOTAL	8.470	ug/g	-	7.900	ug/g	-	0.240	ug/g	R
U-234	4.070	pci/g	-	5.900	pci/g	J	1.170	pci/g	J
U-235/236	0.180	pci/g	J	0.420	pci/g	J	0.090	pci/g	J
U-238	4.640	pci/g	-	6.690	pci/g	J	1.240	pci/g	J
U-TOTAL	14.500	mg/kg	-	27.000	mg/kg	-	4.260	mg/kg	J

TABLE D-3A
(Continued)

PHASE II - RADIOLOGICAL PARAMETERS

BORING NUMBER	LSP-SS-10			LSP-SS-11			LSP-SS-12		
SAMPLE NUMBER	114881			114498			114501		
	0 - 0.5			0 - 0.5			0 - 0.5		
SAMPLING DATE	06/14/93			05/04/93			05/04/93		
RADIOLOGICAL PARAMETERS	RESULTS	UNITS	VQ	RESULTS	UNITS	VQ	RESULTS	UNITS	VQ
CS-137	0.071	pci/g	UJ	0.215	pci/g	-	0.339	pci/g	-
GROSS ALPHA	20.300	pci/g	J	24.500	pci/g	-	41.000	pci/g	-
GROSS BETA	29.900	pci/g	J	31.400	pci/g	-	36.500	pci/g	-
NP-237	0.161	pci/g	N	0.143	pci/g	N	0.284	pci/g	N
PU-238	0.018	pci/g	UJ	0.070	pci/g	J	0.064	pci/g	J
PU-239/240	0.018	pci/g	UJ	0.049	pci/g	J	0.040	pci/g	J
RA-226	0.205	pci/g	J	1.470	pci/g	-	1.050	pci/g	-
RA-228	0.360	pci/g	UJ	1.070	pci/g	-	0.709	pci/g	-
RU-106	0.636	pci/g	UJ	0.780	pci/g	UJ	0.710	pci/g	UJ
SR-90	0.159	pci/g	UJ	0.508	pci/g	J	0.627	pci/g	UJ
TC-99	0.423	pci/g	UJ	0.396	pci/g	UJ	0.369	pci/g	UJ
TH-228	0.082	pci/g	J	0.935	pci/g	J	0.865	pci/g	J
TH-230	0.373	pci/g	J	3.590	pci/g	J	6.010	pci/g	J
TH-232	0.037	pci/g	J	0.841	pci/g	J	0.693	pci/g	J
TH-TOTAL	0.340	ug/g	J	7.660	ug/g	J	6.320	ug/g	J
U-234	1.080	pci/g	-	7.710	pci/g	J	7.870	pci/g	J
U-235/236	0.025	pci/g	J	0.377	pci/g	J	0.348	pci/g	J
U-238	0.856	pci/g	-	9.380	pci/g	J	9.540	pci/g	J
U-TOTAL	2.450	mg/kg	J	29.000	mg/kg	-	25.700	mg/kg	-

000284

TABLE D-3A
(Continued)

PHASE II - RADIOLOGICAL PARAMETERS

BORING NUMBER	LSP-SS-13			LSP-SS-14		
SAMPLE NUMBER	114514			114516		
	0 - 0.5			0 - 0.5		
SAMPLING DATE	05/05/93			05/05/93		
RADIOLOGICAL PARAMETERS	RESULTS	UNITS	VQ	RESULTS	UNITS	VQ
CS-137	0.890	pci/g	-	0.543	pci/g	-
GROSS ALPHA	145.000	pci/g	-	131.000	pci/g	-
GROSS BETA	106.000	pci/g	-	108.000	pci/g	-
NP-237	0.720	pci/g	N	0.676	pci/g	N
PU-238	0.242	pci/g	J	0.256	pci/g	J
PU-239/240	0.119	pci/g	J	0.122	pci/g	J
RA-226	3.470	pci/g	-	3.160	pci/g	-
RA-228	2.920	pci/g	-	2.850	pci/g	-
RU-106	0.880	pci/g	UJ	0.840	pci/g	UJ
SR-90	0.203	pci/g	UJ	0.785	pci/g	J
TC-99	0.390	pci/g	UJ	0.370	pci/g	UJ
TH-228	2.910	pci/g	J	2.580	pci/g	J
TH-230	44.800	pci/g	J	40.900	pci/g	J
TH-232	2.750	pci/g	J	NA		
TH-TOTAL	25.100	ug/g	J	22.300	ug/g	J
U-234	22.700	pci/g	J	26.500	pci/g	J
U-235/236	1.450	pci/g	J	1.830	pci/g	J
U-238	56.400	pci/g	J	84.000	pci/g	J
U-TOTAL	175.000	mg/kg	-	244.000	mg/kg	-

TABLE D-3A
(Continued)

PHASE II - CHEMICAL PARAMETERS

BORING NUMBER	LSP-SS-03				LSP-SS-04				LSP-SS-07			
SAMPLE NUMBER	114467				114474				114477			
	0-0.5				0-0.5				0-0.5			
SAMPLING DATE	05/01/93				05/02/93				05/02/93			
CHEMICAL PARAMETERS	RESULTS	UNITS	L	VQ	RESULTS	UNITS	L	VQ	RESULTS	UNITS	L	VQ
Inorganics												
Aluminum	11300.000	mg/kg	C	-	12300.000	mg/kg	D	-	12800.000	mg/kg	C	-
Antimony	0.490	mg/kg	C	UJ	0.280	mg/kg	D	UJ	0.230	mg/kg	C	R
Arsenic	7.500	mg/kg	C	J	7.100	mg/kg	D	J	7.800	mg/kg	C	J
Barium	97.600	mg/kg	C	J	99.600	mg/kg	D	J	98.000	mg/kg	C	-
Beryllium	1.400	mg/kg	C	-	1.300	mg/kg	D	-	1.600	mg/kg	C	-
Cadmium	1.100	mg/kg	C	-	1.200	mg/kg	D	-	0.970	mg/kg	C	-
Calcium	20100.000	mg/kg	C	J	22100.000	mg/kg	D	J	52500.000	mg/kg	C	-
Chromium	16.300	mg/kg	C	-	16.500	mg/kg	D	-	18.900	mg/kg	C	-
Cobalt	10.400	mg/kg	C	-	11.500	mg/kg	D	-	13.800	mg/kg	C	-
Copper	25.400	mg/kg	C	-	19.900	mg/kg	D	-	22.000	mg/kg	C	-
Cyanide	0.150	mg/kg	C	J	0.190	mg/kg	D	J	0.120	mg/kg	C	U
Iron	23300.000	mg/kg	C	J	22800.000	mg/kg	D	J	19900.000	mg/kg	C	-
Lead	18.900	mg/kg	C	J	17.000	mg/kg	D	J	23.900	mg/kg	C	J
Magnesium	9050.000	mg/kg	C	-	8160.000	mg/kg	D	-	16900.000	mg/kg	C	J
Manganese	584.000	mg/kg	C	J	569.000	mg/kg	D	J	743.000	mg/kg	C	-
Mercury	0.120	mg/kg	C	U	0.120	mg/kg	D	U	0.110	mg/kg	C	U
Molybdenum	1.300	mg/kg	C	U	2.000	mg/kg	D	U	1.600	mg/kg	C	-
Nickel	20.500	mg/kg	C	-	21.000	mg/kg	D	-	21.700	mg/kg	C	-
Potassium	1470.000	mg/kg	C	J	1320.000	mg/kg	D	J	1700.000	mg/kg	C	J
Selenium	0.250	mg/kg	C	UJ	0.240	mg/kg	D	UJ	0.230	mg/kg	C	UJ
Silicon	1000.000	mg/kg	C	J	1170.000	mg/kg	D	J	785.000	mg/kg	C	-
Silver	0.490	mg/kg	C	U	0.460	mg/kg	D	U	0.460	mg/kg	C	U
Sodium	90.100	mg/kg	C	-	98.900	mg/kg	D	-	131.000	mg/kg	C	J
Thallium	0.250	mg/kg	C	U	0.240	mg/kg	D	U	0.230	mg/kg	C	U
Vanadium	27.600	mg/kg	C	J	28.300	mg/kg	D	J	31.000	mg/kg	C	J
Zinc	56.500	mg/kg	C	J	55.900	mg/kg	D	J	96.600	mg/kg	C	-
Volatile Organics												
1,1,1-Trichloroethane	13.000	ug/kg	C	U	12.000	ug/kg	D	U	12.000	ug/kg	C	U
1,1,2,2-Tetrachloroethane	13.000	ug/kg	C	U	12.000	ug/kg	D	U	12.000	ug/kg	C	U
1,1,2-Trichloroethane	13.000	ug/kg	C	U	12.000	ug/kg	D	U	12.000	ug/kg	C	U
1,1-Dichloroethane	13.000	ug/kg	C	U	12.000	ug/kg	D	U	12.000	ug/kg	C	U
1,1-Dichloroethene	13.000	ug/kg	C	U	12.000	ug/kg	D	U	12.000	ug/kg	C	U
1,2-Dichloroethane	13.000	ug/kg	C	U	12.000	ug/kg	D	U	12.000	ug/kg	C	U
1,2-Dichloroethene	13.000	ug/kg	C	U	12.000	ug/kg	D	U	12.000	ug/kg	C	U
1,2-Dichloropropane	13.000	ug/kg	C	U	12.000	ug/kg	D	U	12.000	ug/kg	C	U
2-Butanone	13.000	ug/kg	C	U	12.000	ug/kg	D	U	12.000	ug/kg	C	U
2-Hexanone	13.000	ug/kg	C	U	12.000	ug/kg	D	U	12.000	ug/kg	C	U
4-Methyl-2-pentanone	13.000	ug/kg	C	U	12.000	ug/kg	D	U	12.000	ug/kg	C	U
Acetone	13.000	ug/kg	C	U	12.000	ug/kg	D	U	12.000	ug/kg	C	U
Benzene	13.000	ug/kg	C	U	12.000	ug/kg	D	U	12.000	ug/kg	C	U

TABLE D-3A
(Continued)

PHASE II - CHEMICAL PARAMETERS

BORING NUMBER	LSP-SS-03			LSP-SS-04			LSP-SS-07		
SAMPLE NUMBER	114467			114474			114477		
	0-0.5			0-0.5			0-0.5		
SAMPLING DATE	05/01/93			05/02/93			05/02/93		
CHEMICAL PARAMETERS	RESULTS	UNITS	L VQ	RESULTS	UNITS	L VQ	RESULTS	UNITS	L VQ
Volatile Organics									
Bromodichloromethane	13.000	ug/kg	C U	12.000	ug/kg	D U	12.000	ug/kg	C U
Bromoform	13.000	ug/kg	C U	12.000	ug/kg	D U	12.000	ug/kg	C U
Bromomethane	13.000	ug/kg	C UJ	12.000	ug/kg	D UJ	12.000	ug/kg	C U
Carbon Tetrachloride	13.000	ug/kg	C U	12.000	ug/kg	D U	12.000	ug/kg	C U
Carbon disulfide	13.000	ug/kg	C U	12.000	ug/kg	D U	12.000	ug/kg	C U
Chlorobenzene	13.000	ug/kg	C U	12.000	ug/kg	D U	12.000	ug/kg	C U
Chloroethane	13.000	ug/kg	C UJ	12.000	ug/kg	D UJ	12.000	ug/kg	C U
Chloroform	13.000	ug/kg	C U	12.000	ug/kg	D U	12.000	ug/kg	C U
Chloromethane	13.000	ug/kg	C U	12.000	ug/kg	D U	12.000	ug/kg	C U
Dibromochloromethane	13.000	ug/kg	C U	12.000	ug/kg	D U	12.000	ug/kg	C U
Ethylbenzene	13.000	ug/kg	C U	12.000	ug/kg	D U	12.000	ug/kg	C U
Methylene chloride	13.000	ug/kg	C U	12.000	ug/kg	D U	12.000	ug/kg	C U
Styrene	13.000	ug/kg	C U	12.000	ug/kg	D U	12.000	ug/kg	C U
Tetrachloroethene	13.000	ug/kg	C U	12.000	ug/kg	D U	12.000	ug/kg	C U
Toluene	13.000	ug/kg	C U	12.000	ug/kg	D U	12.000	ug/kg	C U
Trichloroethene	13.000	ug/kg	C U	12.000	ug/kg	D U	12.000	ug/kg	C U
Vinyl Acetate	NA			NA			12.000	ug/kg	C U
Vinyl chloride	13.000	ug/kg	C U	12.000	ug/kg	D U	12.000	ug/kg	C U
Xylenes, Total	13.000	ug/kg	C U	12.000	ug/kg	D U	12.000	ug/kg	C U
cis-1,3-Dichloropropene	13.000	ug/kg	C U	12.000	ug/kg	D U	12.000	ug/kg	C U
trans-1,3-Dichloropropene	13.000	ug/kg	C U	12.000	ug/kg	D U	12.000	ug/kg	C UJ
Semivolatile Organics									
1,2,4-Trichlorobenzene	410.000	ug/kg	C UJ	400.000	ug/kg	D UJ	580.000	ug/kg	C U
1,2-Dichlorobenzene	410.000	ug/kg	C U	400.000	ug/kg	D U	580.000	ug/kg	C U
1,3-Dichlorobenzene	410.000	ug/kg	C U	400.000	ug/kg	D U	580.000	ug/kg	C U
1,4-Dichlorobenzene	410.000	ug/kg	C U	400.000	ug/kg	D U	580.000	ug/kg	C U
2,4,5-Trichlorophenol	990.000	ug/kg	C U	970.000	ug/kg	D U	1400.000	ug/kg	C U
2,4,6-Trichlorophenol	410.000	ug/kg	C U	400.000	ug/kg	D U	580.000	ug/kg	C U
2,4-Dichlorophenol	410.000	ug/kg	C U	400.000	ug/kg	D U	580.000	ug/kg	C U
2,4-Dimethylphenol	410.000	ug/kg	C U	400.000	ug/kg	D U	580.000	ug/kg	C U
2,4-Dinitrophenol	990.000	ug/kg	C UJ	970.000	ug/kg	D UJ	1400.000	ug/kg	C U
2,4-Dinitrotoluene	410.000	ug/kg	C U	400.000	ug/kg	D U	580.000	ug/kg	C U
2,6-Dinitrotoluene	410.000	ug/kg	C U	400.000	ug/kg	D U	580.000	ug/kg	C U
2-Chloronaphthalene	410.000	ug/kg	C U	400.000	ug/kg	D U	580.000	ug/kg	C U
2-Chlorophenol	410.000	ug/kg	C U	400.000	ug/kg	D U	580.000	ug/kg	C U
2-Methylnaphthalene	410.000	ug/kg	C U	400.000	ug/kg	D U	580.000	ug/kg	C U
2-Methylphenol	410.000	ug/kg	C UJ	400.000	ug/kg	D U	580.000	ug/kg	C U
2-Nitroaniline	990.000	ug/kg	C U	970.000	ug/kg	D U	1400.000	ug/kg	C U
2-Nitrophenol	410.000	ug/kg	C U	400.000	ug/kg	D U	580.000	ug/kg	C U
3,3'-Dichlorobenzidine	410.000	ug/kg	C U	400.000	ug/kg	D UJ	580.000	ug/kg	C U

TABLE D-3A
(Continued)

PHASE II - CHEMICAL PARAMETERS

BORING NUMBER	LSP-SS-03				LSP-SS-04				LSP-SS-07			
SAMPLE NUMBER	114467				114474				114477			
	0-0.5				0-0.5				0-0.5			
SAMPLING DATE	05/01/93				05/02/93				05/02/93			
CHEMICAL PARAMETERS	RESULTS	UNITS	L	VQ	RESULTS	UNITS	L	VQ	RESULTS	UNITS	L	VQ
Semivolatile Organics												
3-Nitroaniline	990.000	ug/kg	C	UJ	970.000	ug/kg	D	UJ	1400.000	ug/kg	C	U
4,6-Dinitro-2-methylphenol	990.000	ug/kg	C	U	970.000	ug/kg	D	U	1400.000	ug/kg	C	U
4-Bromophenyl phenyl ether	410.000	ug/kg	C	U	400.000	ug/kg	D	U	580.000	ug/kg	C	U
4-Chloro-3-methylphenol	410.000	ug/kg	C	U	400.000	ug/kg	D	U	580.000	ug/kg	C	U
4-Chlorophenylphenyl ether	410.000	ug/kg	C	U	400.000	ug/kg	D	U	580.000	ug/kg	C	U
4-Methylphenol	410.000	ug/kg	C	UJ	400.000	ug/kg	D	UJ	580.000	ug/kg	C	U
4-Nitroaniline	990.000	ug/kg	C	R	970.000	ug/kg	D	UJ	1400.000	ug/kg	C	U
4-Nitrophenol	990.000	ug/kg	C	U	970.000	ug/kg	D	R	1400.000	ug/kg	C	U
Acenaphthene	410.000	ug/kg	C	U	400.000	ug/kg	D	U	580.000	ug/kg	C	U
Acenaphthylene	410.000	ug/kg	C	U	400.000	ug/kg	D	U	580.000	ug/kg	C	U
Anthracene	410.000	ug/kg	C	U	400.000	ug/kg	D	U	580.000	ug/kg	C	U
Benzo(a)anthracene	410.000	ug/kg	C	U	400.000	ug/kg	D	U	580.000	ug/kg	C	U
Benzo(a)pyrene	410.000	ug/kg	C	U	400.000	ug/kg	D	U	580.000	ug/kg	C	U
Benzo(b)fluoranthene	410.000	ug/kg	C	U	400.000	ug/kg	D	U	580.000	ug/kg	C	U
Benzo(g,h,i)perylene	410.000	ug/kg	C	U	400.000	ug/kg	D	U	580.000	ug/kg	C	U
Benzo(k)fluoranthene	410.000	ug/kg	C	UJ	400.000	ug/kg	D	U	580.000	ug/kg	C	U
Benzoic acid	2000.000	ug/kg	C	U	1900.000	ug/kg	D	U	2800.000	ug/kg	C	U
Benzyl alcohol	410.000	ug/kg	C	U	400.000	ug/kg	D	U	580.000	ug/kg	C	U
Butyl benzyl phthalate	410.000	ug/kg	C	U	400.000	ug/kg	D	U	580.000	ug/kg	C	U
Carbazole	410.000	ug/kg	C	U	400.000	ug/kg	D	U	580.000	ug/kg	C	U
Chrysene	410.000	ug/kg	C	U	400.000	ug/kg	D	U	580.000	ug/kg	C	U
Di-n-butyl phthalate	410.000	ug/kg	C	U	400.000	ug/kg	D	U	580.000	ug/kg	C	U
Di-n-octyl phthalate	410.000	ug/kg	C	U	400.000	ug/kg	U	U	87.000	ug/kg	C	J
Dibenzo(a,h)anthracene	410.000	ug/kg	C	U	400.000	ug/kg	D	U	580.000	ug/kg	C	U
Dibenzofuran	410.000	ug/kg	C	U	400.000	ug/kg	D	U	580.000	ug/kg	C	U
Diethyl phthalate	410.000	ug/kg	C	UJ	400.000	ug/kg	D	U	580.000	ug/kg	C	U
Dimethyl phthalate	410.000	ug/kg	C	U	400.000	ug/kg	D	U	580.000	ug/kg	C	U
Fluoranthene	410.000	ug/kg	C	U	400.000	ug/kg	D	U	580.000	ug/kg	C	U
Fluorene	410.000	ug/kg	C	U	400.000	ug/kg	D	U	580.000	ug/kg	C	U
Hexachlorobenzene	410.000	ug/kg	C	U	400.000	ug/kg	D	U	580.000	ug/kg	C	U
Hexachlorobutadiene	410.000	ug/kg	C	R	400.000	ug/kg	D	U	580.000	ug/kg	C	U
Hexachlorocyclopentadiene	410.000	ug/kg	C	U	400.000	ug/kg	D	U	580.000	ug/kg	C	U
Hexachloroethane	410.000	ug/kg	C	U	400.000	ug/kg	D	U	580.000	ug/kg	C	U
Indeno(1,2,3-cd)pyrene	410.000	ug/kg	C	U	400.000	ug/kg	D	U	580.000	ug/kg	C	U
Isophorone	410.000	ug/kg	C	U	400.000	ug/kg	D	U	580.000	ug/kg	C	U
N-Nitroso-di-n-propylamine	410.000	ug/kg	C	U	400.000	ug/kg	D	U	580.000	ug/kg	C	U
N-Nitrosodiphenylamine	410.000	ug/kg	C	U	400.000	ug/kg	D	U	580.000	ug/kg	C	U
Naphthalene	410.000	ug/kg	C	U	400.000	ug/kg	D	U	580.000	ug/kg	C	U
Nitrobenzene	410.000	ug/kg	C	U	400.000	ug/kg	D	U	580.000	ug/kg	C	U
Pentachlorophenol	990.000	ug/kg	C	U	970.000	ug/kg	D	U	1400.000	ug/kg	C	U
Phenanthrene	410.000	ug/kg	C	U	400.000	ug/kg	D	U	580.000	ug/kg	C	U
Phenol	410.000	ug/kg	C	U	400.000	ug/kg	D	U	580.000	ug/kg	C	U

TABLE D-3A
(Continued)

PHASE II - CHEMICAL PARAMETERS

BORING NUMBER	LSP-SS-03			LSP-SS-04			LSP-SS-07		
SAMPLE NUMBER	114467			114474			114477		
	0-0.5			0-0.5			0-0.5		
SAMPLING DATE	05/01/93			05/02/93			05/02/93		
CHEMICAL PARAMETERS	RESULTS	UNITS	L VQ	RESULTS	UNITS	L VQ	RESULTS	UNITS	L VQ
Semivolatile Organics									
Pyrene	410.000	ug/kg	C U	400.000	ug/kg	D U	580.000	ug/kg	C U
bis(2-Chloroethoxy)methane	410.000	ug/kg	C U	400.000	ug/kg	D U	580.000	ug/kg	C U
bis(2-Chloroethyl)ether	410.000	ug/kg	C U	400.000	ug/kg	D U	580.000	ug/kg	C U
bis(2-Chloroisopropyl) ether	410.000	ug/kg	C UJ	400.000	ug/kg	D UJ	580.000	ug/kg	C U
bis(2-Ethylhexyl) phthalate	240.000	ug/kg	C J	10000.000	ug/kg	D -	1700.000	ug/kg	C -
p-Chloroaniline	410.000	ug/kg	C U	400.000	ug/kg	D UJ	580.000	ug/kg	C U
Pesticide Organics/PCBs									
4,4'-DDD	4.100	ug/kg	C U	4.000	ug/kg	D U	5.900	ug/kg	C U
4,4'-DDE	4.100	ug/kg	C U	4.000	ug/kg	D U	5.900	ug/kg	C U
4,4'-DDT	4.100	ug/kg	C U	4.000	ug/kg	D U	5.900	ug/kg	C U
Aldrin	2.100	ug/kg	C U	2.100	ug/kg	D U	3.100	ug/kg	C U
Aroclor-1016	41.000	ug/kg	C U	40.000	ug/kg	D U	59.000	ug/kg	C UJ
Aroclor-1221	83.000	ug/kg	C U	81.000	ug/kg	D U	120.000	ug/kg	C UJ
Aroclor-1232	41.000	ug/kg	C U	40.000	ug/kg	D U	59.000	ug/kg	C UJ
Aroclor-1242	41.000	ug/kg	C U	40.000	ug/kg	D U	59.000	ug/kg	C UJ
Aroclor-1248	41.000	ug/kg	C U	40.000	ug/kg	D U	59.000	ug/kg	C UJ
Aroclor-1254	41.000	ug/kg	C U	40.000	ug/kg	D U	59.000	ug/kg	C UJ
Aroclor-1260	41.000	ug/kg	C U	40.000	ug/kg	D U	59.000	ug/kg	C UJ
Dieldrin	4.100	ug/kg	C U	4.000	ug/kg	D U	5.900	ug/kg	C U
Endosulfan II	4.100	ug/kg	C U	4.000	ug/kg	D U	5.900	ug/kg	C U
Endosulfan sulfate	4.100	ug/kg	C U	4.000	ug/kg	D U	5.900	ug/kg	C U
Endosulfan-I	2.100	ug/kg	C U	2.100	ug/kg	D U	3.100	ug/kg	C U
Endrin	4.100	ug/kg	C U	4.000	ug/kg	D U	5.900	ug/kg	C U
Endrin aldehyde	4.100	ug/kg	C U	4.000	ug/kg	D U	5.900	ug/kg	C U
Endrin ketone	4.100	ug/kg	C U	4.000	ug/kg	D U	5.900	ug/kg	C U
Heptachlor	2.100	ug/kg	C U	2.100	ug/kg	D U	3.100	ug/kg	C U
Heptachlor epoxide	2.100	ug/kg	C U	2.100	ug/kg	D U	3.100	ug/kg	C U
Methoxychlor	21.000	ug/kg	C UJ	21.000	ug/kg	D UJ	31.000	ug/kg	C U
Toxaphene	210.000	ug/kg	C U	210.000	ug/kg	D U	310.000	ug/kg	C UJ
alpha-BHC	2.100	ug/kg	C U	2.100	ug/kg	D U	3.100	ug/kg	C U
alpha-Chlordane	2.100	ug/kg	C U	2.100	ug/kg	D U	3.100	ug/kg	C U
beta-BHC	2.100	ug/kg	C U	2.100	ug/kg	D U	3.100	ug/kg	C U
delta-BHC	2.100	ug/kg	C U	2.100	ug/kg	D U	3.100	ug/kg	C U
gamma-BHC (Lindane)	2.100	ug/kg	C U	2.100	ug/kg	D U	3.100	ug/kg	C U
gamma-Chlordane	2.100	ug/kg	C U	2.100	ug/kg	D U	3.100	ug/kg	C U

TABLE D-3A
(Continued)

PHASE II - CHEMICAL PARAMETERS

BORING NUMBER	LSP-SS-05			LSP-SS-06			LSP-SS-08		
SAMPLE NUMBER	114485			114487			114488		
	0-0.5			0-0.5			0-0.5		
SAMPLING DATE	05/03/93			05/03/93			05/03/93		
CHEMICAL PARAMETERS	RESULTS	UNITS	L VQ	RESULTS	UNITS	L VQ	RESULTS	UNITS	L VQ
Inorganics									
Aluminum	4070.000	mg/kg	C -	4370.000	mg/kg	C -	12200.000	mg/kg	C -
Antimony	0.600	mg/kg	C UJ	0.840	mg/kg	C UJ	0.510	mg/kg	C UJ
Arsenic	5.200	mg/kg	C J	9.500	mg/kg	C J	6.300	mg/kg	C J
Barium	71.100	mg/kg	C J	82.700	mg/kg	C J	97.600	mg/kg	C J
Beryllium	0.350	mg/kg	C U	0.470	mg/kg	C -	1.300	mg/kg	C -
Cadmium	0.710	mg/kg	C U	0.680	mg/kg	C U	0.960	mg/kg	C -
Calcium	347000.000	mg/kg	C J	312000.000	mg/kg	C J	31100.000	mg/kg	C J
Chromium	20.100	mg/kg	C -	5.100	mg/kg	C -	16.600	mg/kg	C -
Cobalt	1.100	mg/kg	C U	5.200	mg/kg	C -	11.700	mg/kg	C -
Copper	36.000	mg/kg	C -	36.000	mg/kg	C -	21.300	mg/kg	C -
Cyanide	0.320	mg/kg	C J	0.820	mg/kg	C J	0.120	mg/kg	C UJ
Iron	4620.000	mg/kg	C J	5040.000	mg/kg	C J	22100.000	mg/kg	C J
Lead	7.800	mg/kg	C J	6.300	mg/kg	C J	14.800	mg/kg	C J
Magnesium	15600.000	mg/kg	C -	13800.000	mg/kg	C -	11400.000	mg/kg	C -
Manganese	622.000	mg/kg	C J	562.000	mg/kg	C J	570.000	mg/kg	C J
Mercury	0.180	mg/kg	C U	0.270	mg/kg	C -	0.120	mg/kg	C U
Molybdenum	1.100	mg/kg	C U	1.000	mg/kg	C U	1.900	mg/kg	C U
Nickel	5.200	mg/kg	C -	8.300	mg/kg	C -	22.100	mg/kg	C -
Potassium	63.000	mg/kg	C UJ	162.000	mg/kg	C UJ	1160.000	mg/kg	C J
Selenium	0.340	mg/kg	C UJ	0.340	mg/kg	C UJ	0.240	mg/kg	C UJ
Silicon	3200.000	mg/kg	C J	3550.000	mg/kg	C J	1110.000	mg/kg	C J
Silver	0.710	mg/kg	C U	0.680	mg/kg	C U	0.460	mg/kg	C U
Sodium	222.000	mg/kg	C -	231.000	mg/kg	C -	104.000	mg/kg	C -
Thallium	0.340	mg/kg	C UJ	0.340	mg/kg	C U	0.240	mg/kg	C U
Vanadium	15.600	mg/kg	C J	14.200	mg/kg	C J	27.600	mg/kg	C J
Zinc	21.800	mg/kg	C U	35.900	mg/kg	C J	56.800	mg/kg	C J
Volatile Organics									
1,1,1-Trichloroethane	19.000	ug/kg	C U	94.000	ug/kg	C U	12.000	ug/kg	C U
1,1,2,2-Tetrachloroethane	19.000	ug/kg	C U	94.000	ug/kg	C U	12.000	ug/kg	C U
1,1,2-Trichloroethane	19.000	ug/kg	C U	94.000	ug/kg	C U	12.000	ug/kg	C U
1,1-Dichloroethane	19.000	ug/kg	C U	94.000	ug/kg	C U	12.000	ug/kg	C U
1,1-Dichloroethene	19.000	ug/kg	C U	94.000	ug/kg	C U	12.000	ug/kg	C U
1,2-Dichloroethane	19.000	ug/kg	C U	94.000	ug/kg	C U	12.000	ug/kg	C U
1,2-Dichloroethene	19.000	ug/kg	C U	94.000	ug/kg	C U	12.000	ug/kg	C U
1,2-Dichloropropane	19.000	ug/kg	C U	94.000	ug/kg	C U	12.000	ug/kg	C U
2-Butanone	19.000	ug/kg	C U	94.000	ug/kg	C U	12.000	ug/kg	C U
2-Hexanone	19.000	ug/kg	C U	94.000	ug/kg	C U	12.000	ug/kg	C U
4-Methyl-2-pentanone	19.000	ug/kg	C U	94.000	ug/kg	C U	12.000	ug/kg	C U
Acetone	19.000	ug/kg	C U	94.000	ug/kg	C U	12.000	ug/kg	C U
Benzene	19.000	ug/kg	C U	94.000	ug/kg	C U	12.000	ug/kg	C U

000590

TABLE D-3A
(Continued)

PHASE II - CHEMICAL PARAMETERS

BORING NUMBER	LSP-SS-05			LSP-SS-06			LSP-SS-08		
SAMPLE NUMBER	114485			114487			114488		
	0-0.5			0-0.5			0-0.5		
SAMPLING DATE	05/03/93			05/03/93			05/03/93		
CHEMICAL PARAMETERS	RESULTS	UNITS	L VQ	RESULTS	UNITS	L VQ	RESULTS	UNITS	L VQ
Volatile Organics									
Bromodichloromethane	19.000	ug/kg	C U	94.000	ug/kg	C U	12.000	ug/kg	C U
Bromoform	19.000	ug/kg	C U	94.000	ug/kg	C U	12.000	ug/kg	C U
Bromomethane	19.000	ug/kg	C U	94.000	ug/kg	C U	12.000	ug/kg	C UJ
Carbon Tetrachloride	19.000	ug/kg	C U	94.000	ug/kg	C U	12.000	ug/kg	C U
Carbon disulfide	19.000	ug/kg	C U	94.000	ug/kg	C U	12.000	ug/kg	C U
Chlorobenzene	19.000	ug/kg	C U	94.000	ug/kg	C U	12.000	ug/kg	C U
Chloroethane	19.000	ug/kg	C UJ	94.000	ug/kg	C UJ	12.000	ug/kg	C UJ
Chloroform	19.000	ug/kg	C U	94.000	ug/kg	C U	12.000	ug/kg	C U
Chloromethane	19.000	ug/kg	C U	94.000	ug/kg	C U	12.000	ug/kg	C U
Dibromochloromethane	19.000	ug/kg	C U	94.000	ug/kg	C U	12.000	ug/kg	C U
Ethylbenzene	19.000	ug/kg	C U	94.000	ug/kg	C U	12.000	ug/kg	C U
Methylene chloride	19.000	ug/kg	C U	94.000	ug/kg	C U	12.000	ug/kg	C U
Styrene	19.000	ug/kg	C U	94.000	ug/kg	C U	12.000	ug/kg	C U
Tetrachloroethene	19.000	ug/kg	C U	94.000	ug/kg	C U	12.000	ug/kg	C U
Toluene	19.000	ug/kg	C U	94.000	ug/kg	C U	12.000	ug/kg	C U
Trichloroethene	19.000	ug/kg	C U	94.000	ug/kg	C U	12.000	ug/kg	C U
Vinyl chloride	19.000	ug/kg	C U	94.000	ug/kg	C U	12.000	ug/kg	C U
Xylenes, Total	19.000	ug/kg	C U	94.000	ug/kg	C U	12.000	ug/kg	C U
cis-1,3-Dichloropropene	19.000	ug/kg	C U	94.000	ug/kg	C U	12.000	ug/kg	C U
trans-1,3-Dichloropropene	19.000	ug/kg	C U	94.000	ug/kg	C U	12.000	ug/kg	C U
Semivolatile Organics									
1,2,4-Trichlorobenzene	570.000	ug/kg	C UJ	690.000	ug/kg	C UJ	400.000	ug/kg	C UJ
1,2-Dichlorobenzene	570.000	ug/kg	C U	690.000	ug/kg	C U	400.000	ug/kg	C U
1,3-Dichlorobenzene	570.000	ug/kg	C U	690.000	ug/kg	C U	400.000	ug/kg	C U
1,4-Dichlorobenzene	570.000	ug/kg	C U	690.000	ug/kg	C U	400.000	ug/kg	C U
2,4,5-Trichlorophenol	1400.000	ug/kg	C U	1700.000	ug/kg	C U	960.000	ug/kg	C U
2,4,6-Trichlorophenol	570.000	ug/kg	C U	690.000	ug/kg	C U	400.000	ug/kg	C U
2,4-Dichlorophenol	570.000	ug/kg	C U	690.000	ug/kg	C U	400.000	ug/kg	C U
2,4-Dimethylphenol	570.000	ug/kg	C U	690.000	ug/kg	C U	400.000	ug/kg	C U
2,4-Dinitrophenol	1400.000	ug/kg	C U	1700.000	ug/kg	C UJ	960.000	ug/kg	C UJ
2,4-Dinitrotoluene	570.000	ug/kg	C U	690.000	ug/kg	C U	400.000	ug/kg	C U
2,6-Dinitrotoluene	570.000	ug/kg	C U	690.000	ug/kg	C U	400.000	ug/kg	C U
2-Chloronaphthalene	570.000	ug/kg	C U	690.000	ug/kg	C U	400.000	ug/kg	C U
2-Chlorophenol	570.000	ug/kg	C U	690.000	ug/kg	C U	400.000	ug/kg	C U
2-Methylnaphthalene	570.000	ug/kg	C U	690.000	ug/kg	C U	400.000	ug/kg	C U
2-Methylphenol	570.000	ug/kg	C U	690.000	ug/kg	C UJ	400.000	ug/kg	C UJ
2-Nitroaniline	1400.000	ug/kg	C U	1700.000	ug/kg	C U	960.000	ug/kg	C U
2-Nitrophenol	570.000	ug/kg	C U	690.000	ug/kg	C U	400.000	ug/kg	C U
3,3'-Dichlorobenzidine	570.000	ug/kg	C UJ	690.000	ug/kg	C U	400.000	ug/kg	C U
3-Nitroaniline	1400.000	ug/kg	C UJ	1700.000	ug/kg	C UJ	960.000	ug/kg	C UJ

TABLE D-3A
(Continued)

PHASE II - CHEMICAL PARAMETERS

BORING NUMBER	LSP-SS-05			LSP-SS-06			LSP-SS-08		
SAMPLE NUMBER	114485			114487			114488		
	0-0.5			0-0.5			0-0.5		
SAMPLING DATE	05/03/93			05/03/93			05/03/93		
CHEMICAL PARAMETERS	RESULTS	UNITS	L VQ	RESULTS	UNITS	L VQ	RESULTS	UNITS	L VQ
Semivolatile Organics									
4,6-Dinitro-2-methylphenol	1400.000	ug/kg	C U	1700.000	ug/kg	C U	960.000	ug/kg	C U
4-Bromophenyl phenyl ether	570.000	ug/kg	C U	690.000	ug/kg	C U	400.000	ug/kg	C U
4-Chloro-3-methylphenol	570.000	ug/kg	C U	690.000	ug/kg	C U	400.000	ug/kg	C U
4-Chlorophenylphenyl ether	570.000	ug/kg	C U	690.000	ug/kg	C U	400.000	ug/kg	C U
4-Methylphenol	570.000	ug/kg	C UJ	690.000	ug/kg	C UJ	400.000	ug/kg	C UJ
4-Nitroaniline	1400.000	ug/kg	C UJ	1700.000	ug/kg	C R	960.000	ug/kg	C R
4-Nitrophenol	1400.000	ug/kg	C R	1700.000	ug/kg	C U	960.000	ug/kg	C U
Acenaphthene	570.000	ug/kg	C U	690.000	ug/kg	C U	400.000	ug/kg	C U
Acenaphthylene	570.000	ug/kg	C U	690.000	ug/kg	C U	400.000	ug/kg	C U
Anthracene	570.000	ug/kg	C U	690.000	ug/kg	C U	400.000	ug/kg	C U
Benzo(a)anthracene	570.000	ug/kg	C U	690.000	ug/kg	C U	400.000	ug/kg	C U
Benzo(a)pyrene	570.000	ug/kg	C U	690.000	ug/kg	C U	400.000	ug/kg	C U
Benzo(b)fluoranthene	570.000	ug/kg	C U	690.000	ug/kg	C U	400.000	ug/kg	C U
Benzo(g,h,i)perylene	570.000	ug/kg	C U	690.000	ug/kg	C U	400.000	ug/kg	C U
Benzo(k)fluoranthene	570.000	ug/kg	C U	690.000	ug/kg	C UJ	400.000	ug/kg	C UJ
Benzoic acid	2800.000	ug/kg	C U	3300.000	ug/kg	C U	1900.000	ug/kg	C U
Benzyl alcohol	570.000	ug/kg	C U	690.000	ug/kg	C U	400.000	ug/kg	C U
Butyl benzyl phthalate	570.000	ug/kg	C U	690.000	ug/kg	C U	400.000	ug/kg	C U
Carbazole	570.000	ug/kg	C U	690.000	ug/kg	C U	400.000	ug/kg	C U
Chrysene	570.000	ug/kg	C U	690.000	ug/kg	C U	400.000	ug/kg	C U
Di-n-butyl phthalate	570.000	ug/kg	C U	690.000	ug/kg	C U	400.000	ug/kg	C U
Di-n-octyl phthalate	570.000	ug/kg	C U	690.000	ug/kg	C U	400.000	ug/kg	C U
Dibenzo(a,h)anthracene	570.000	ug/kg	C U	690.000	ug/kg	C U	400.000	ug/kg	C U
Dibenzofuran	570.000	ug/kg	C U	690.000	ug/kg	C U	400.000	ug/kg	C U
Diethyl phthalate	570.000	ug/kg	C U	690.000	ug/kg	C UJ	400.000	ug/kg	C UJ
Dimethyl phthalate	570.000	ug/kg	C U	690.000	ug/kg	C U	400.000	ug/kg	C U
Fluoranthene	570.000	ug/kg	C U	690.000	ug/kg	C U	400.000	ug/kg	C U
Fluorene	570.000	ug/kg	C U	690.000	ug/kg	C U	400.000	ug/kg	C U
Hexachlorobenzene	570.000	ug/kg	C U	690.000	ug/kg	C U	400.000	ug/kg	C U
Hexachlorobutadiene	570.000	ug/kg	C R	690.000	ug/kg	C R	400.000	ug/kg	C R
Hexachlorocyclopentadiene	570.000	ug/kg	C U	690.000	ug/kg	C U	400.000	ug/kg	C U
Hexachloroethane	570.000	ug/kg	C U	690.000	ug/kg	C U	400.000	ug/kg	C U
Indeno(1,2,3-cd)pyrene	570.000	ug/kg	C U	690.000	ug/kg	C U	400.000	ug/kg	C U
Isophorone	570.000	ug/kg	C U	690.000	ug/kg	C U	400.000	ug/kg	C U
N-Nitroso-di-n-propylamine	570.000	ug/kg	C U	690.000	ug/kg	C U	400.000	ug/kg	C U
N-Nitrosodiphenylamine	570.000	ug/kg	C U	690.000	ug/kg	C U	400.000	ug/kg	C U
Naphthalene	570.000	ug/kg	C U	690.000	ug/kg	C U	400.000	ug/kg	C U
Nitrobenzene	570.000	ug/kg	C U	690.000	ug/kg	C U	400.000	ug/kg	C U
Pentachlorophenol	1400.000	ug/kg	C U	1700.000	ug/kg	C U	960.000	ug/kg	C U
Phenanthrene	570.000	ug/kg	C U	690.000	ug/kg	C U	400.000	ug/kg	C U
Phenol	570.000	ug/kg	C U	690.000	ug/kg	C U	400.000	ug/kg	C U
Pyrene	570.000	ug/kg	C U	690.000	ug/kg	C U	400.000	ug/kg	C U

000392

TABLE D-3A
(Continued)

PHASE II - CHEMICAL PARAMETERS

BORING NUMBER	LSP-SS-05			LSP-SS-06			LSP-SS-08		
SAMPLE NUMBER	114485			114487			114488		
	0-0.5			0-0.5			0-0.5		
SAMPLING DATE	05/03/93			05/03/93			05/03/93		
CHEMICAL PARAMETERS	RESULTS	UNITS	L VQ	RESULTS	UNITS	L VQ	RESULTS	UNITS	L VQ
Semivolatile Organics									
bis(2-Chloroethoxy)methane	570.000	ug/kg	C U	690.000	ug/kg	C U	400.000	ug/kg	C U
bis(2-Chloroethyl)ether	570.000	ug/kg	C U	690.000	ug/kg	C U	400.000	ug/kg	C U
bis(2-Chloroisopropyl) ether	570.000	ug/kg	C UJ	690.000	ug/kg	C UJ	400.000	ug/kg	C UJ
bis(2-Ethylhexyl) phthalate	78.000	ug/kg	C J	220.000	ug/kg	C J	96.000	ug/kg	C J
p-Chloroaniline	570.000	ug/kg	C UJ	690.000	ug/kg	C U	400.000	ug/kg	C U
Pesticide Organics/PCBs									
4,4'-DDD	5.600	ug/kg	C U	7.100	ug/kg	C U	4.000	ug/kg	C U
4,4'-DDE	5.600	ug/kg	C U	7.100	ug/kg	C U	4.000	ug/kg	C U
4,4'-DDT	5.600	ug/kg	C U	7.100	ug/kg	C U	4.000	ug/kg	C U
Aldrin	2.900	ug/kg	C U	3.600	ug/kg	C U	2.000	ug/kg	C U
Aroclor-1016	56.000	ug/kg	C UJ	71.000	ug/kg	C U	40.000	ug/kg	C UJ
Aroclor-1221	110.000	ug/kg	C UJ	140.000	ug/kg	C U	81.000	ug/kg	C UJ
Aroclor-1232	56.000	ug/kg	C UJ	71.000	ug/kg	C U	40.000	ug/kg	C UJ
Aroclor-1242	56.000	ug/kg	C UJ	71.000	ug/kg	C U	40.000	ug/kg	C UJ
Aroclor-1248	56.000	ug/kg	C UJ	71.000	ug/kg	C U	40.000	ug/kg	C UJ
Aroclor-1254	56.000	ug/kg	C UJ	71.000	ug/kg	C U	40.000	ug/kg	C UJ
Aroclor-1260	56.000	ug/kg	C UJ	71.000	ug/kg	C U	40.000	ug/kg	C UJ
Dieldrin	5.600	ug/kg	C U	7.100	ug/kg	C U	4.000	ug/kg	C U
Endosulfan II	5.600	ug/kg	C U	7.100	ug/kg	C U	4.000	ug/kg	C U
Endosulfan sulfate	5.600	ug/kg	C U	7.100	ug/kg	C U	4.000	ug/kg	C U
Endosulfan-I	2.900	ug/kg	C U	3.600	ug/kg	C U	2.000	ug/kg	C U
Endrin	5.600	ug/kg	C U	7.100	ug/kg	C U	4.000	ug/kg	C U
Endrin aldehyde	5.600	ug/kg	C U	7.100	ug/kg	C U	4.000	ug/kg	C U
Endrin ketone	5.600	ug/kg	C U	7.100	ug/kg	C U	4.000	ug/kg	C U
Heptachlor	2.900	ug/kg	C U	3.600	ug/kg	C U	2.000	ug/kg	C U
Heptachlor epoxide	2.900	ug/kg	C U	3.600	ug/kg	C U	2.000	ug/kg	C U
Methoxychlor	29.000	ug/kg	C UJ	36.000	ug/kg	C UJ	20.000	ug/kg	C UJ
Toxaphene	290.000	ug/kg	C UJ	360.000	ug/kg	C U	200.000	ug/kg	C UJ
alpha-BHC	2.900	ug/kg	C U	3.600	ug/kg	C U	2.000	ug/kg	C U
alpha-Chlordane	2.900	ug/kg	C U	3.600	ug/kg	C U	2.000	ug/kg	C U
beta-BHC	2.900	ug/kg	C U	3.600	ug/kg	C U	2.000	ug/kg	C U
delta-BHC	2.900	ug/kg	C U	3.600	ug/kg	C U	2.000	ug/kg	C U
gamma-BHC (Lindane)	2.900	ug/kg	C U	3.600	ug/kg	C U	2.000	ug/kg	C U
gamma-Chlordane	2.900	ug/kg	C U	3.600	ug/kg	C U	2.000	ug/kg	C U

TABLE D-3A
(Continued)

PHASE II - CHEMICAL PARAMETERS

BORING NUMBER	LSP-SS-11			LSP-SS-12			LSP-SS-13		
SAMPLE NUMBER	114498			114501			114514		
	0-0.5			0-0.5			0-0.5		
SAMPLING DATE	05/04/93			05/04/93			05/05/93		
CHEMICAL PARAMETERS	RESULTS	UNITS L	VQ	RESULTS	UNITS L	VQ	RESULTS	UNITS L	VQ
Inorganics									
Aluminum	9690.000	mg/kg C	-	11900.000	mg/kg C	-	7380.000	mg/kg C	-
Antimony	1.200	mg/kg C	UJ	0.790	mg/kg C	UJ	0.860	mg/kg C	UJ
Arsenic	6.400	mg/kg C	-	5.800	mg/kg C	-	7.100	mg/kg C	-
Barium	81.300	mg/kg C	-	82.000	mg/kg C	-	82.700	mg/kg C	-
Beryllium	1.500	mg/kg C	-	1.700	mg/kg C	-	1.800	mg/kg C	-
Cadmium	1.100	mg/kg C	-	1.100	mg/kg C	-	0.460	mg/kg C	U
Calcium	48500.000	mg/kg C	-	67000.000	mg/kg C	-	97300.000	mg/kg C	-
Chromium	13.000	mg/kg C	-	16.000	mg/kg C	-	14.200	mg/kg C	-
Cobalt	9.300	mg/kg C	-	8.900	mg/kg C	-	5.100	mg/kg C	-
Copper	20.500	mg/kg C	J	19.100	mg/kg C	J	18.600	mg/kg C	J
Cyanide	0.130	mg/kg C	R	0.120	mg/kg C	R	0.690	mg/kg C	J
Iron	18100.000	mg/kg C	-	19100.000	mg/kg C	-	10800.000	mg/kg C	-
Lead	19.700	mg/kg C	J	21.300	mg/kg C	J	52.700	mg/kg C	J
Magnesium	17500.000	mg/kg C	-	19600.000	mg/kg C	-	27500.000	mg/kg C	-
Manganese	546.000	mg/kg C	-	585.000	mg/kg C	-	995.000	mg/kg C	-
Mercury	0.130	mg/kg C	U	0.110	mg/kg C	U	0.110	mg/kg C	U
Molybdenum	1.200	mg/kg C	U	1.100	mg/kg C	U	1.900	mg/kg C	U
Nickel	17.800	mg/kg C	-	18.300	mg/kg C	-	11.600	mg/kg C	-
Potassium	1400.000	mg/kg C	J	2080.000	mg/kg C	J	853.000	mg/kg C	J
Selenium	0.250	mg/kg C	UJ	0.230	mg/kg C	UJ	0.370	mg/kg C	J
Silicon	1070.000	mg/kg C	-	867.000	mg/kg C	-	1920.000	mg/kg C	-
Silver	0.510	mg/kg C	U	0.460	mg/kg C	U	0.460	mg/kg C	U
Sodium	142.000	mg/kg C	J	155.000	mg/kg C	J	262.000	mg/kg C	J
Thallium	0.250	mg/kg C	U	0.230	mg/kg C	U	0.230	mg/kg C	U
Vanadium	23.600	mg/kg C	J	28.400	mg/kg C	J	20.400	mg/kg C	J
Zinc	55.700	mg/kg C	J	55.500	mg/kg C	J	54.300	mg/kg C	J
Volatile Organics									
1,1,1-Trichloroethane	12.000	ug/kg C	U	12.000	ug/kg C	U	12.000	ug/kg C	U
1,1,2,2-Tetrachloroethane	12.000	ug/kg C	U	12.000	ug/kg C	U	12.000	ug/kg C	U
1,1,2-Trichloroethane	12.000	ug/kg C	U	12.000	ug/kg C	U	12.000	ug/kg C	U
1,1-Dichloroethane	12.000	ug/kg C	U	12.000	ug/kg C	U	12.000	ug/kg C	U
1,1-Dichloroethene	12.000	ug/kg C	U	12.000	ug/kg C	U	12.000	ug/kg C	U
1,2-Dichloroethane	12.000	ug/kg C	U	12.000	ug/kg C	U	12.000	ug/kg C	U
1,2-Dichloroethene	12.000	ug/kg C	U	12.000	ug/kg C	U	12.000	ug/kg C	U
1,2-Dichloropropane	12.000	ug/kg C	U	12.000	ug/kg C	U	12.000	ug/kg C	U
2-Butanone	12.000	ug/kg C	U	12.000	ug/kg C	U	12.000	ug/kg C	U
2-Hexanone	12.000	ug/kg C	U	12.000	ug/kg C	U	12.000	ug/kg C	U
4-Methyl-2-pentanone	12.000	ug/kg C	U	12.000	ug/kg C	U	12.000	ug/kg C	U
Acetone	12.000	ug/kg C	UJ	2.000	ug/kg C	J	12.000	ug/kg C	UJ
Benzene	12.000	ug/kg C	U	12.000	ug/kg C	U	12.000	ug/kg C	U

TABLE D-3A
(Continued)

PHASE II - CHEMICAL PARAMETERS

BORING NUMBER	LSP-SS-11				LSP-SS-12				LSP-SS-13			
SAMPLE NUMBER	114498				114501				114514			
	0-0.5				0-0.5				0-0.5			
SAMPLING DATE	05/04/93				05/04/93				05/05/93			
CHEMICAL PARAMETERS	RESULTS	UNITS	L	VQ	RESULTS	UNITS	L	VQ	RESULTS	UNITS	L	VQ
Volatile Organics												
Bromodichloromethane	12.000	ug/kg	C	U	12.000	ug/kg	C	U	12.000	ug/kg	C	U
Bromoform	12.000	ug/kg	C	U	12.000	ug/kg	C	U	12.000	ug/kg	C	U
Bromomethane	12.000	ug/kg	C	U	12.000	ug/kg	C	U	12.000	ug/kg	C	U
Carbon Tetrachloride	12.000	ug/kg	C	U	12.000	ug/kg	C	U	12.000	ug/kg	C	U
Carbon disulfide	12.000	ug/kg	C	U	12.000	ug/kg	C	U	12.000	ug/kg	C	U
Chlorobenzene	12.000	ug/kg	C	U	12.000	ug/kg	C	U	12.000	ug/kg	C	U
Chloroethane	12.000	ug/kg	C	U	12.000	ug/kg	C	U	12.000	ug/kg	C	U
Chloroform	12.000	ug/kg	C	U	12.000	ug/kg	C	U	12.000	ug/kg	C	U
Chloromethane	12.000	ug/kg	C	UJ	12.000	ug/kg	C	UJ	12.000	ug/kg	C	UJ
Dibromochloromethane	12.000	ug/kg	C	U	12.000	ug/kg	C	U	12.000	ug/kg	C	U
Ethylbenzene	12.000	ug/kg	C	U	12.000	ug/kg	C	U	12.000	ug/kg	C	U
Methylene chloride	12.000	ug/kg	C	U	12.000	ug/kg	C	U	27.000	ug/kg	C	U
Styrene	12.000	ug/kg	C	U	12.000	ug/kg	C	U	12.000	ug/kg	C	U
Tetrachloroethene	12.000	ug/kg	C	U	12.000	ug/kg	C	U	12.000	ug/kg	C	U
Toluene	12.000	ug/kg	C	U	4.000	ug/kg	C	J	7.000	ug/kg	C	J
Trichloroethene	12.000	ug/kg	C	U	12.000	ug/kg	C	U	12.000	ug/kg	C	U
Vinyl Acetate	12.000	ug/kg	C	U	12.000	ug/kg	C	U	12.000	ug/kg	C	U
Vinyl chloride	12.000	ug/kg	C	U	12.000	ug/kg	C	U	12.000	ug/kg	C	U
Xylenes, Total	12.000	ug/kg	C	U	12.000	ug/kg	C	U	12.000	ug/kg	C	U
cis-1,3-Dichloropropene	12.000	ug/kg	C	U	12.000	ug/kg	C	U	12.000	ug/kg	C	U
trans-1,3-Dichloropropene	12.000	ug/kg	C	U	12.000	ug/kg	C	U	12.000	ug/kg	C	U
Semivolatile Organics												
1,2,4-Trichlorobenzene	390.000	ug/kg	C	UJ	410.000	ug/kg	C	UJ	390.000	ug/kg	C	UJ
1,2-Dichlorobenzene	390.000	ug/kg	C	U	410.000	ug/kg	C	U	390.000	ug/kg	C	U
1,3-Dichlorobenzene	390.000	ug/kg	C	U	410.000	ug/kg	C	U	390.000	ug/kg	C	U
1,4-Dichlorobenzene	390.000	ug/kg	C	U	410.000	ug/kg	C	U	390.000	ug/kg	C	U
2,4,5-Trichlorophenol	950.000	ug/kg	C	U	1000.000	ug/kg	C	U	950.000	ug/kg	C	U
2,4,6-Trichlorophenol	390.000	ug/kg	C	U	410.000	ug/kg	C	U	390.000	ug/kg	C	U
2,4-Dichlorophenol	390.000	ug/kg	C	U	410.000	ug/kg	C	U	390.000	ug/kg	C	U
2,4-Dimethylphenol	390.000	ug/kg	C	U	410.000	ug/kg	C	U	390.000	ug/kg	C	U
2,4-Dinitrophenol	950.000	ug/kg	C	R	1000.000	ug/kg	C	R	950.000	ug/kg	C	R
2,4-Dinitrotoluene	390.000	ug/kg	C	U	410.000	ug/kg	C	U	390.000	ug/kg	C	U
2,6-Dinitrotoluene	390.000	ug/kg	C	U	410.000	ug/kg	C	U	390.000	ug/kg	C	U
2-Benzyl-4-chlorophenol	390.000	ug/kg	C	UJ	410.000	ug/kg	C	UJ	390.000	ug/kg	C	UJ
2-Chloronaphthalene	390.000	ug/kg	C	U	410.000	ug/kg	C	U	390.000	ug/kg	C	U
2-Chlorophenol	390.000	ug/kg	C	U	410.000	ug/kg	C	U	390.000	ug/kg	C	U
2-Methylnaphthalene	390.000	ug/kg	C	U	410.000	ug/kg	C	U	390.000	ug/kg	C	U
2-Methylphenol	390.000	ug/kg	C	U	410.000	ug/kg	C	U	390.000	ug/kg	C	U
2-Nitroaniline	950.000	ug/kg	C	U	1000.000	ug/kg	C	U	950.000	ug/kg	C	U
2-Nitrophenol	390.000	ug/kg	C	U	410.000	ug/kg	C	U	390.000	ug/kg	C	U

TABLE D-3A
(Continued)

PHASE II - CHEMICAL PARAMETERS

BORING NUMBER	LSP-SS-11				LSP-SS-12				LSP-SS-13			
SAMPLE NUMBER	114498				114501				114514			
	0-0.5				0-0.5				0-0.5			
SAMPLING DATE	05/04/93				05/04/93				05/05/93			
CHEMICAL PARAMETERS	RESULTS	UNITS	L	VQ	RESULTS	UNITS	L	VQ	RESULTS	UNITS	L	VQ
Semivolatile Organics												
3,3'-Dichlorobenzidine	390.000	ug/kg	C	U	410.000	ug/kg	C	U	390.000	ug/kg	C	U
3-Nitroaniline	950.000	ug/kg	C	U	1000.000	ug/kg	C	U	950.000	ug/kg	C	U
4,6-Dinitro-2-methylphenol	950.000	ug/kg	C	R	1000.000	ug/kg	C	R	950.000	ug/kg	C	R
4-Bromophenyl phenyl ether	390.000	ug/kg	C	U	410.000	ug/kg	C	U	390.000	ug/kg	C	U
4-Chloro-3-methylphenol	390.000	ug/kg	C	U	410.000	ug/kg	C	U	390.000	ug/kg	C	U
4-Chlorophenylphenyl ether	390.000	ug/kg	C	U	410.000	ug/kg	C	U	390.000	ug/kg	C	U
4-Methylphenol	390.000	ug/kg	C	U	410.000	ug/kg	C	U	390.000	ug/kg	C	U
4-Nitroaniline	950.000	ug/kg	C	U	1000.000	ug/kg	C	U	950.000	ug/kg	C	U
4-Nitrophenol	950.000	ug/kg	C	R	1000.000	ug/kg	C	R	950.000	ug/kg	C	R
Acenaphthene	390.000	ug/kg	C	U	410.000	ug/kg	C	U	390.000	ug/kg	C	U
Acenaphthylene	390.000	ug/kg	C	U	410.000	ug/kg	C	U	390.000	ug/kg	C	U
Anthracene	1.000	ug/kg	C	J	410.000	ug/kg	C	U	120.000	ug/kg	C	J
Benzo(a)anthracene	1.000	ug/kg	C	J	410.000	ug/kg	C	U	630.000	ug/kg	C	-
Benzo(a)pyrene	1.000	ug/kg	C	J	410.000	ug/kg	C	U	820.000	ug/kg	C	-
Benzo(b)fluoranthene	2.000	ug/kg	C	J	410.000	ug/kg	C	U	680.000	ug/kg	C	-
Benzo(g,h,i)perylene	390.000	ug/kg	C	U	410.000	ug/kg	C	U	530.000	ug/kg	C	U
Benzo(k)fluoranthene	2.000	ug/kg	C	J	410.000	ug/kg	C	U	660.000	ug/kg	C	-
Benzoic acid	1900.000	ug/kg	C	R	2000.000	ug/kg	C	R	1900.000	ug/kg	C	R
Benzyl alcohol	390.000	ug/kg	C	UJ	410.000	ug/kg	C	UJ	390.000	ug/kg	C	UJ
Butyl benzyl phthalate	390.000	ug/kg	C	R	410.000	ug/kg	C	R	390.000	ug/kg	C	R
Carbazole	390.000	ug/kg	C	U	410.000	ug/kg	C	U	71.000	ug/kg	C	J
Chrysene	2.000	ug/kg	C	J	43.000	ug/kg	C	J	720.000	ug/kg	C	-
Di-n-butyl phthalate	390.000	ug/kg	C	U	410.000	ug/kg	C	U	42.000	ug/kg	C	J
Di-n-octyl phthalate	390.000	ug/kg	C	R	410.000	ug/kg	C	R	390.000	ug/kg	C	R
Dibenzo(a,h)anthracene	390.000	ug/kg	C	UJ	410.000	ug/kg	C	UJ	240.000	ug/kg	C	J
Dibenzofuran	390.000	ug/kg	C	U	410.000	ug/kg	C	U	390.000	ug/kg	C	U
Diethyl phthalate	390.000	ug/kg	C	U	410.000	ug/kg	C	U	390.000	ug/kg	C	U
Dimethyl phthalate	390.000	ug/kg	C	U	410.000	ug/kg	C	U	390.000	ug/kg	C	U
Fluoranthene	3.000	ug/kg	C	J	74.000	ug/kg	C	J	1300.000	ug/kg	C	-
Fluorene	390.000	ug/kg	C	U	410.000	ug/kg	C	U	390.000	ug/kg	C	U
Hexachlorobenzene	390.000	ug/kg	C	UJ	410.000	ug/kg	C	UJ	390.000	ug/kg	C	UJ
Hexachlorobutadiene	390.000	ug/kg	C	U	410.000	ug/kg	C	U	390.000	ug/kg	C	U
Hexachlorocyclopentadiene	390.000	ug/kg	C	UJ	410.000	ug/kg	C	UJ	390.000	ug/kg	C	UJ
Hexachloroethane	390.000	ug/kg	C	U	410.000	ug/kg	C	U	390.000	ug/kg	C	U
Indeno(1,2,3-cd)pyrene	390.000	ug/kg	C	UJ	410.000	ug/kg	C	UJ	580.000	ug/kg	C	J
Isophorone	390.000	ug/kg	C	U	410.000	ug/kg	C	U	390.000	ug/kg	C	U
N-Nitroso-di-n-propylamine	390.000	ug/kg	C	U	410.000	ug/kg	C	U	390.000	ug/kg	C	U
N-Nitrosodiphenylamine	390.000	ug/kg	C	U	410.000	ug/kg	C	U	390.000	ug/kg	C	U
Naphthalene	390.000	ug/kg	C	U	410.000	ug/kg	C	U	390.000	ug/kg	C	U
Nitrobenzene	390.000	ug/kg	C	U	410.000	ug/kg	C	U	390.000	ug/kg	C	U
Pentachlorophenol	950.000	ug/kg	C	UJ	1000.000	ug/kg	C	UJ	950.000	ug/kg	C	UJ
Phenanthrene	1.000	ug/kg	C	J	410.000	ug/kg	C	U	640.000	ug/kg	C	-

TABLE D-3A
(Continued)

PHASE II - CHEMICAL PARAMETERS

BORING NUMBER	LSP-SS-11				LSP-SS-12				LSP-SS-13			
SAMPLE NUMBER	114498				114501				114514			
	0-0.5				0-0.5				0-0.5			
SAMPLING DATE	05/04/93				05/04/93				05/05/93			
CHEMICAL PARAMETERS	RESULTS	UNITS	L	VQ	RESULTS	UNITS	L	VQ	RESULTS	UNITS	L	VQ
Semivolatile Organics												
Phenol	390.000	ug/kg	C	U	410.000	ug/kg	C	U	390.000	ug/kg	C	U
Pyrene	3.000	ug/kg	C	J	61.000	ug/kg	C	J	1100.000	ug/kg	C	-
bis(2-Chloroethoxy)methane	390.000	ug/kg	C	U	410.000	ug/kg	C	U	390.000	ug/kg	C	U
bis(2-Chloroethyl)ether	390.000	ug/kg	C	U	410.000	ug/kg	C	U	390.000	ug/kg	C	U
bis(2-Chloroisopropyl) ether	390.000	ug/kg	C	U	410.000	ug/kg	C	U	390.000	ug/kg	C	U
bis(2-Ethylhexyl) phthalate	390.000	ug/kg	C	UJ	410.000	ug/kg	C	UJ	390.000	ug/kg	C	UJ
p-Chloroaniline	390.000	ug/kg	C	U	410.000	ug/kg	C	U	390.000	ug/kg	C	U
Pesticide Organics/PCBs												
4,4'-DDD	4.000	ug/kg	C	U	4.100	ug/kg	C	U	4.000	ug/kg	C	U
4,4'-DDE	4.000	ug/kg	C	U	4.100	ug/kg	C	U	4.000	ug/kg	C	U
4,4'-DDT	4.000	ug/kg	C	U	4.100	ug/kg	C	U	4.000	ug/kg	C	U
Aldrin	2.000	ug/kg	C	U	2.100	ug/kg	C	U	2.000	ug/kg	C	U
Aroclor-1016	40.000	ug/kg	C	U	41.000	ug/kg	C	U	40.000	ug/kg	C	U
Aroclor-1221	81.000	ug/kg	C	U	84.000	ug/kg	C	U	80.000	ug/kg	C	U
Aroclor-1232	40.000	ug/kg	C	U	41.000	ug/kg	C	U	40.000	ug/kg	C	U
Aroclor-1242	40.000	ug/kg	C	U	41.000	ug/kg	C	U	40.000	ug/kg	C	U
Aroclor-1248	40.000	ug/kg	C	U	41.000	ug/kg	C	U	40.000	ug/kg	C	U
Aroclor-1254	40.000	ug/kg	C	U	43.000	ug/kg	C	-	590.000	ug/kg	C	-
Aroclor-1260	40.000	ug/kg	C	U	41.000	ug/kg	C	U	40.000	ug/kg	C	U
Dieldrin	4.000	ug/kg	C	U	4.100	ug/kg	C	U	4.000	ug/kg	C	U
Endosulfan II	4.000	ug/kg	C	U	4.100	ug/kg	C	U	4.000	ug/kg	C	U
Endosulfan sulfate	4.000	ug/kg	C	U	4.100	ug/kg	C	U	4.000	ug/kg	C	U
Endosulfan-I	2.000	ug/kg	C	U	2.100	ug/kg	C	U	2.000	ug/kg	C	U
Endrin	4.000	ug/kg	C	U	4.100	ug/kg	C	U	4.000	ug/kg	C	U
Endrin aldehyde	4.000	ug/kg	C	U	4.100	ug/kg	C	U	4.000	ug/kg	C	U
Endrin ketone	4.000	ug/kg	C	U	4.100	ug/kg	C	U	4.000	ug/kg	C	U
Heptachlor	2.000	ug/kg	C	U	2.100	ug/kg	C	U	2.000	ug/kg	C	U
Heptachlor epoxide	2.000	ug/kg	C	U	2.100	ug/kg	C	U	2.000	ug/kg	C	U
Methoxychlor	20.000	ug/kg	C	U	21.000	ug/kg	C	U	20.000	ug/kg	C	U
Toxaphene	200.000	ug/kg	C	U	210.000	ug/kg	C	U	200.000	ug/kg	C	U
alpha-BHC	2.000	ug/kg	C	U	2.100	ug/kg	C	U	2.000	ug/kg	C	U
alpha-Chlordane	2.000	ug/kg	C	U	2.100	ug/kg	C	U	2.000	ug/kg	C	U
beta-BHC	2.000	ug/kg	C	U	2.100	ug/kg	C	U	2.000	ug/kg	C	U
delta-BHC	2.000	ug/kg	C	U	2.100	ug/kg	C	U	2.000	ug/kg	C	U
gamma-BHC (Lindane)	2.000	ug/kg	C	U	2.100	ug/kg	C	U	2.000	ug/kg	C	U
gamma-Chlordane	2.000	ug/kg	C	U	2.100	ug/kg	C	U	2.000	ug/kg	C	U

TABLE D-3A
(Continued)

PHASE II - CHEMICAL PARAMETERS

BORING NUMBER	LSP-SS-14			LSP-TR-01			LSP-TR-01		
SAMPLE NUMBER	114516			114581			114589		
	0-0.5			0-0.5			0-0.5		
SAMPLING DATE	05/05/93			05/11/93			05/16/93		
CHEMICAL PARAMETERS	RESULTS	UNITS	L VQ	RESULTS	UNITS	L VQ	RESULTS	UNITS	L VQ
Inorganics									
Aluminum	12700.000	mg/kg	C -	NA			4620.000	mg/kg	C -
Antimony	0.600	mg/kg	C UJ	NA			1.300	mg/kg	C UJ
Arsenic	5.700	mg/kg	C -	NA			5.800	mg/kg	C -
Barium	101.000	mg/kg	C -	NA			77.200	mg/kg	C J
Beryllium	2.000	mg/kg	C -	NA			0.500	mg/kg	C U
Cadmium	0.980	mg/kg	C -	NA			1.300	mg/kg	C U
Calcium	83100.000	mg/kg	C -	NA			112000.000	mg/kg	C -
Chromium	18.000	mg/kg	C -	NA			54.200	mg/kg	C J
Cobalt	8.200	mg/kg	C -	NA			4.700	mg/kg	C J
Copper	21.500	mg/kg	C J	NA			67.100	mg/kg	C -
Cyanide	0.350	mg/kg	C J	NA			0.130	mg/kg	C U
Iron	16700.000	mg/kg	C -	NA			74000.000	mg/kg	C -
Lead	45.900	mg/kg	C J	NA			58.300	mg/kg	C -
Magnesium	21500.000	mg/kg	C -	NA			17400.000	mg/kg	C -
Manganese	1210.000	mg/kg	C -	NA			681.000	mg/kg	C J
Mercury	0.110	mg/kg	C U	NA			0.100	mg/kg	C U
Molybdenum	1.300	mg/kg	C U	NA			21.000	mg/kg	C J
Nickel	17.900	mg/kg	C -	NA			24.600	mg/kg	C -
Potassium	1930.000	mg/kg	C J	NA			765.000	mg/kg	C -
Selenium	0.260	mg/kg	C J	NA			0.530	mg/kg	C U
Silicon	1030.000	mg/kg	C -	NA			604.000	mg/kg	C -
Silver	0.480	mg/kg	C U	NA			20.800	mg/kg	C J
Sodium	222.000	mg/kg	C J	NA			187.000	mg/kg	C -
Thallium	0.240	mg/kg	C U	NA			0.530	mg/kg	C U
Vanadium	29.900	mg/kg	C J	NA			39.100	mg/kg	C J
Zinc	68.000	mg/kg	C J	NA			107.000	mg/kg	C J
Volatile Organics									
1,1,1-Trichloroethane	12.000	ug/kg	C U	NA			13.000	ug/kg	C U
1,1,2,2-Tetrachloroethane	12.000	ug/kg	C U	NA			13.000	ug/kg	C U
1,1,2-Trichloroethane	12.000	ug/kg	C U	NA			13.000	ug/kg	C U
1,1-Dichloroethane	12.000	ug/kg	C U	NA			13.000	ug/kg	C U
1,1-Dichloroethene	12.000	ug/kg	C U	NA			13.000	ug/kg	C U
1,2-Dichloroethane	12.000	ug/kg	C U	NA			13.000	ug/kg	C U
1,2-Dichloroethene	12.000	ug/kg	C U	NA			13.000	ug/kg	C U
1,2-Dichloropropane	12.000	ug/kg	C U	NA			13.000	ug/kg	C U
2-Butanone	12.000	ug/kg	C U	NA			13.000	ug/kg	C U
2-Hexanone	12.000	ug/kg	C U	NA			13.000	ug/kg	C U
4-Methyl-2-pentanone	12.000	ug/kg	C U	NA			13.000	ug/kg	C U
Acetone	12.000	ug/kg	C UJ	NA			13.000	ug/kg	C U
Benzene	12.000	ug/kg	C U	NA			13.000	ug/kg	C U

000698

TABLE D-3A
(Continued)

PHASE II - CHEMICAL PARAMETERS

BORING NUMBER	LSP-SS-14				LSP-TR-01				LSP-TR-01			
SAMPLE NUMBER	114516				114581				114589			
	0-0.5				0-0.5				0-0.5			
SAMPLING DATE	05/05/93				05/11/93				05/16/93			
CHEMICAL PARAMETERS	RESULTS	UNITS	L	VQ	RESULTS	UNITS	L	VQ	RESULTS	UNITS	L	VQ
Volatile Organics												
Bromodichloromethane	12.000	ug/kg	C	U	NA				13.000	ug/kg	C	U
Bromoform	12.000	ug/kg	C	U	NA				13.000	ug/kg	C	U
Bromomethane	12.000	ug/kg	C	U	NA				13.000	ug/kg	C	U
Carbon Tetrachloride	12.000	ug/kg	C	U	NA				13.000	ug/kg	C	U
Carbon disulfide	12.000	ug/kg	C	U	NA				13.000	ug/kg	C	U
Chlorobenzene	12.000	ug/kg	C	U	NA				13.000	ug/kg	C	U
Chloroethane	12.000	ug/kg	C	U	NA				13.000	ug/kg	C	U
Chloroform	12.000	ug/kg	C	U	NA				13.000	ug/kg	C	U
Chloromethane	12.000	ug/kg	C	UJ	NA				13.000	ug/kg	C	UJ
Dibromochloromethane	12.000	ug/kg	C	U	NA				13.000	ug/kg	C	U
Ethylbenzene	12.000	ug/kg	C	U	NA				13.000	ug/kg	C	U
Methylene chloride	29.000	ug/kg	C	U	NA				13.000	ug/kg	C	U
Styrene	12.000	ug/kg	C	U	NA				13.000	ug/kg	C	U
Tetrachloroethene	12.000	ug/kg	C	U	NA				13.000	ug/kg	C	U
Toluene	17.000	ug/kg	C	-	NA				13.000	ug/kg	C	U
Trichloroethene	12.000	ug/kg	C	U	NA				13.000	ug/kg	C	U
Vinyl Acetate	12.000	ug/kg	C	U	NA				13.000	ug/kg	C	U
Vinyl chloride	12.000	ug/kg	C	U	NA				13.000	ug/kg	C	U
Xylenes, Total	12.000	ug/kg	C	U	NA				13.000	ug/kg	C	U
cis-1,3-Dichloropropene	12.000	ug/kg	C	U	NA				13.000	ug/kg	C	U
trans-1,3-Dichloropropene	12.000	ug/kg	C	U	NA				13.000	ug/kg	C	U
Semivolatile Organics												
1,2,4-Trichlorobenzene	400.000	ug/kg	C	UJ	NA				440.000	ug/kg	C	U
1,2-Dichlorobenzene	400.000	ug/kg	C	U	NA				440.000	ug/kg	C	U
1,3-Dichlorobenzene	400.000	ug/kg	C	U	NA				440.000	ug/kg	C	U
1,4-Dichlorobenzene	400.000	ug/kg	C	U	NA				440.000	ug/kg	C	U
2,4,5-Trichlorophenol	970.000	ug/kg	C	U	NA				1100.000	ug/kg	C	U
2,4,6-Trichlorophenol	400.000	ug/kg	C	U	NA				440.000	ug/kg	C	U
2,4-Dichlorophenol	400.000	ug/kg	C	U	NA				440.000	ug/kg	C	U
2,4-Dimethylphenol	400.000	ug/kg	C	U	NA				440.000	ug/kg	C	U
2,4-Dinitrophenol	970.000	ug/kg	C	R	NA				1100.000	ug/kg	C	UJ
2,4-Dinitrotoluene	400.000	ug/kg	C	U	NA				440.000	ug/kg	C	U
2,6-Dinitrotoluene	400.000	ug/kg	C	U	NA				440.000	ug/kg	C	U
2-Benzyl-4-chlorophenol	400.000	ug/kg	C	UJ	NA				NA			
2-Chloronaphthalene	400.000	ug/kg	C	U	NA				440.000	ug/kg	C	U
2-Chlorophenol	400.000	ug/kg	C	U	NA				440.000	ug/kg	C	U
2-Methylnaphthalene	400.000	ug/kg	C	U	NA				440.000	ug/kg	C	U
2-Methylphenol	400.000	ug/kg	C	U	NA				440.000	ug/kg	C	U
2-Nitroaniline	970.000	ug/kg	C	U	NA				1100.000	ug/kg	C	U
2-Nitrophenol	400.000	ug/kg	C	U	NA				440.000	ug/kg	C	U

TABLE D-3A
(Continued)

PHASE II - CHEMICAL PARAMETERS

BORING NUMBER	LSP-SS-14				LSP-TR-01				LSP-TR-01			
SAMPLE NUMBER	114516				114581				114589			
	0-0.5				0-0.5				0-0.5			
SAMPLING DATE	05/05/93				05/11/93				05/16/93			
CHEMICAL PARAMETERS	RESULTS	UNITS	L	VQ	RESULTS	UNITS	L	VQ	RESULTS	UNITS	L	VQ
Semivolatile Organics												
3,3'-Dichlorobenzidine	400.000	ug/kg	C	U	NA				440.000	ug/kg	C	U
3-Nitroaniline	970.000	ug/kg	C	U	NA				1100.000	ug/kg	C	U
4,6-Dinitro-2-methylphenol	970.000	ug/kg	C	R	NA				1100.000	ug/kg	C	U
4-Bromophenyl phenyl ether	400.000	ug/kg	C	U	NA				440.000	ug/kg	C	U
4-Chloro-3-methylphenol	400.000	ug/kg	C	U	NA				440.000	ug/kg	C	U
4-Chlorophenylphenyl ether	400.000	ug/kg	C	U	NA				440.000	ug/kg	C	U
4-Methylphenol	400.000	ug/kg	C	U	NA				440.000	ug/kg	C	U
4-Nitroaniline	970.000	ug/kg	C	U	NA				1100.000	ug/kg	C	U
4-Nitrophenol	970.000	ug/kg	C	R	NA				1100.000	ug/kg	C	U
Acenaphthene	74.000	ug/kg	C	U	NA				440.000	ug/kg	C	U
Acenaphthylene	400.000	ug/kg	C	U	NA				440.000	ug/kg	C	U
Anthracene	240.000	ug/kg	C	J	NA				440.000	ug/kg	C	U
Benzo(a)anthracene	910.000	ug/kg	C	-	NA				440.000	ug/kg	C	U
Benzo(a)pyrene	1100.000	ug/kg	C	-	NA				440.000	ug/kg	C	U
Benzo(b)fluoranthene	1000.000	ug/kg	C	-	NA				55.000	ug/kg	C	J
Benzo(g,h,i)perylene	630.000	ug/kg	C	-	NA				440.000	ug/kg	C	U
Benzo(k)fluoranthene	800.000	ug/kg	C	-	NA				440.000	ug/kg	C	U
Benzoic acid	1900.000	ug/kg	C	R	NA				NA			
Benzyl alcohol	400.000	ug/kg	C	UJ	NA				NA			
Butyl benzyl phthalate	400.000	ug/kg	C	R	NA				440.000	ug/kg	C	U
Carbazole	140.000	ug/kg	C	J	NA				440.000	ug/kg	C	U
Chrysene	1100.000	ug/kg	C	-	NA				57.000	ug/kg	C	J
Di-n-butyl phthalate	400.000	ug/kg	C	U	NA				440.000	ug/kg	C	U
Di-n-octyl phthalate	400.000	ug/kg	C	R	NA				440.000	ug/kg	C	U
Dibenzo(a,h)anthracene	320.000	ug/kg	C	J	NA				440.000	ug/kg	C	U
Dibenzofuran	42.000	ug/kg	C	J	NA				440.000	ug/kg	C	U
Diethyl phthalate	400.000	ug/kg	C	U	NA				440.000	ug/kg	C	U
Dimethyl phthalate	400.000	ug/kg	C	U	NA				440.000	ug/kg	C	U
Fluoranthene	2100.000	ug/kg	C	-	NA				77.000	ug/kg	C	J
Fluorene	79.000	ug/kg	C	J	NA				440.000	ug/kg	C	U
Hexachlorobenzene	400.000	ug/kg	C	UJ	NA				440.000	ug/kg	C	U
Hexachlorobutadiene	400.000	ug/kg	C	U	NA				440.000	ug/kg	C	U
Hexachlorocyclopentadiene	400.000	ug/kg	C	UJ	NA				440.000	ug/kg	C	UJ
Hexachloroethane	400.000	ug/kg	C	U	NA				440.000	ug/kg	C	U
Indeno(1,2,3-cd)pyrene	720.000	ug/kg	C	J	NA				440.000	ug/kg	C	U
Isophorone	400.000	ug/kg	C	U	NA				440.000	ug/kg	C	U
N-Nitroso-di-n-propylamine	400.000	ug/kg	C	U	NA				440.000	ug/kg	C	U
N-Nitrosodiphenylamine	400.000	ug/kg	C	U	NA				440.000	ug/kg	C	U
Naphthalene	400.000	ug/kg	C	U	NA				440.000	ug/kg	C	U
Nitrobenzene	400.000	ug/kg	C	U	NA				440.000	ug/kg	C	U
Pentachlorophenol	970.000	ug/kg	C	UJ	NA				1100.000	ug/kg	C	U
Phenanthrene	1600.000	ug/kg	C	-	NA				440.000	ug/kg	C	U

TABLE D-3A
(Continued)

PHASE II - CHEMICAL PARAMETERS

BORING NUMBER	LSP-SS-14				LSP-TR-01				LSP-TR-01			
SAMPLE NUMBER	114516				114581				114589			
	0-0.5				0-0.5				0-0.5			
SAMPLING DATE	05/05/93				05/11/93				05/16/93			
CHEMICAL PARAMETERS	RESULTS	UNITS	L	VQ	RESULTS	UNITS	L	VQ	RESULTS	UNITS	L	VQ
Semivolatile Organics												
Phenol	400.000	ug/kg	C	U	NA				440.000	ug/kg	C	U
Pyrene	1900.000	ug/kg	C	-	NA				64.000	ug/kg	C	J
bis(2-Chloroethoxy)methane	400.000	ug/kg	C	U	NA				440.000	ug/kg	C	U
bis(2-Chloroethyl)ether	400.000	ug/kg	C	U	NA				440.000	ug/kg	C	U
bis(2-Chloroisopropyl) ether	400.000	ug/kg	C	U	NA				440.000	ug/kg	C	U
bis(2-Ethylhexyl) phthalate	400.000	ug/kg	C	UJ	NA				440.000	ug/kg	C	U
p-Chloroaniline	400.000	ug/kg	C	U	NA				440.000	ug/kg	C	U
Pesticide Organics/PCBs												
4,4'-DDD	20.000	ug/kg	C	U	4.100	ug/kg	C	U	4.500	ug/kg	C	U
4,4'-DDE	20.000	ug/kg	C	U	4.100	ug/kg	C	U	4.500	ug/kg	C	UJ
4,4'-DDT	20.000	ug/kg	C	U	4.100	ug/kg	C	U	4.500	ug/kg	C	U
Aldrin	10.000	ug/kg	C	U	2.100	ug/kg	C	U	2.300	ug/kg	C	U
Aroclor-1016	200.000	ug/kg	C	U	41.000	ug/kg	C	U	45.000	ug/kg	C	U
Aroclor-1221	400.000	ug/kg	C	U	83.000	ug/kg	C	U	91.000	ug/kg	C	U
Aroclor-1232	200.000	ug/kg	C	U	41.000	ug/kg	C	U	45.000	ug/kg	C	U
Aroclor-1242	200.000	ug/kg	C	U	41.000	ug/kg	C	U	45.000	ug/kg	C	U
Aroclor-1248	200.000	ug/kg	C	U	41.000	ug/kg	C	U	45.000	ug/kg	C	U
Aroclor-1254	90.000	ug/kg	C	-	41.000	ug/kg	C	U	45.000	ug/kg	C	U
Aroclor-1260	200.000	ug/kg	C	U	41.000	ug/kg	C	U	45.000	ug/kg	C	U
Dieldrin	20.000	ug/kg	C	U	4.100	ug/kg	C	U	4.500	ug/kg	C	U
Endosulfan II	20.000	ug/kg	C	U	4.100	ug/kg	C	U	4.500	ug/kg	C	U
Endosulfan sulfate	20.000	ug/kg	C	U	4.100	ug/kg	C	U	4.500	ug/kg	C	U
Endosulfan-I	10.000	ug/kg	C	U	2.100	ug/kg	C	U	2.300	ug/kg	C	U
Endrin	20.000	ug/kg	C	U	4.100	ug/kg	C	U	4.500	ug/kg	C	U
Endrin aldehyde	20.000	ug/kg	C	U	4.100	ug/kg	C	U	4.500	ug/kg	C	U
Endrin ketone	20.000	ug/kg	C	U	4.100	ug/kg	C	U	4.500	ug/kg	C	U
Heptachlor	10.000	ug/kg	C	U	2.100	ug/kg	C	U	2.300	ug/kg	C	U
Heptachlor epoxide	10.000	ug/kg	C	U	2.100	ug/kg	C	U	2.300	ug/kg	C	U
Methoxychlor	100.000	ug/kg	C	U	21.000	ug/kg	C	UJ	23.000	ug/kg	C	U
Toxaphene	1000.000	ug/kg	C	U	210.000	ug/kg	C	U	230.000	ug/kg	C	U
alpha-BHC	10.000	ug/kg	C	U	2.100	ug/kg	C	U	2.300	ug/kg	C	U
alpha-Chlordane	10.000	ug/kg	C	U	2.100	ug/kg	C	U	2.300	ug/kg	C	U
beta-BHC	10.000	ug/kg	C	U	2.100	ug/kg	C	U	2.300	ug/kg	C	U
delta-BHC	10.000	ug/kg	C	U	2.100	ug/kg	C	U	2.300	ug/kg	C	UJ
gamma-BHC (Lindane)	10.000	ug/kg	C	U	2.100	ug/kg	C	U	2.300	ug/kg	C	U
gamma-Chlordane	10.000	ug/kg	C	U	2.100	ug/kg	C	U	2.300	ug/kg	C	U

TABLE D-3A
(Continued)

PHASE II - CHEMICAL PARAMETERS

BORING NUMBER	LSP-TR-02			LSP-SS-09			LSP-SS-10		
SAMPLE NUMBER	114591			114598			114881		
	0-0.5			0-0.5			0-0.5		
SAMPLING DATE	05/16/93			05/19/93			06/14/93		
CHEMICAL PARAMETERS	RESULTS	UNITS	L VQ	RESULTS	UNITS	L VQ	RESULTS	UNITS	L VQ
Inorganics									
Aluminum	5320.000	mg/kg	C -	4480.000	mg/kg	D -	6140.000	mg/kg	C J
Antimony	1.200	mg/kg	C UJ	1.800	mg/kg	D UJ	1.900	mg/kg	C UJ
Arsenic	6.000	mg/kg	C -	3.500	mg/kg	D -	4.300	mg/kg	C J
Barium	62.000	mg/kg	C -	63.300	mg/kg	D J	79.100	mg/kg	C J
Beryllium	0.460	mg/kg	C U	0.700	mg/kg	D U	0.880	mg/kg	C J
Cadmium	1.200	mg/kg	C U	1.800	mg/kg	D U	1.900	mg/kg	C UJ
Calcium	81500.000	mg/kg	C -	279000.000	mg/kg	D -	350000.000	mg/kg	C J
Chromium	22.900	mg/kg	C -	3.500	mg/kg	D UJ	3.800	mg/kg	C UJ
Cobalt	5.100	mg/kg	C -	4.100	mg/kg	D J	3.800	mg/kg	C UJ
Copper	31.800	mg/kg	C -	18.500	mg/kg	D -	16.500	mg/kg	C J
Cyanide	0.120	mg/kg	C U	0.190	mg/kg	D UJ	0.440	mg/kg	C J
Iron	26200.000	mg/kg	C -	3960.000	mg/kg	D -	4890.000	mg/kg	C J
Lead	240.000	mg/kg	C -	1.600	mg/kg	D -	1.500	mg/kg	C J
Magnesium	16200.000	mg/kg	C -	14700.000	mg/kg	D -	19900.000	mg/kg	C J
Manganese	460.000	mg/kg	C -	523.000	mg/kg	D J	671.000	mg/kg	C J
Mercury	0.080	mg/kg	C U	0.130	mg/kg	D U	0.180	mg/kg	C UJ
Molybdenum	9.700	mg/kg	C -	3.500	mg/kg	D U	3.800	mg/kg	C UJ
Nickel	16.300	mg/kg	C -	7.000	mg/kg	D U	7.700	mg/kg	C UJ
Potassium	891.000	mg/kg	C -	65.200	mg/kg	D -	58.700	mg/kg	C J
Selenium	0.430	mg/kg	C U	0.680	mg/kg	D U	0.740	mg/kg	C UJ
Silicon	485.000	mg/kg	C -	915.000	mg/kg	D -	1160.000	mg/kg	C J
Silver	7.100	mg/kg	C -	3.500	mg/kg	D U	3.800	mg/kg	C UJ
Sodium	184.000	mg/kg	C -	224.000	mg/kg	D -	410.000	mg/kg	C J
Thallium	0.430	mg/kg	C U	0.680	mg/kg	D U	0.740	mg/kg	C UJ
Vanadium	25.100	mg/kg	C -	3.600	mg/kg	D J	3.800	mg/kg	C UJ
Zinc	94.400	mg/kg	C -	35.500	mg/kg	D J	33.600	mg/kg	C J
Volatile Organics									
1,1,1-Trichloroethane	12.000	ug/kg	C U	19.000	ug/kg	D U	21.000	ug/kg	C U
1,1,2,2-Tetrachloroethane	12.000	ug/kg	C U	19.000	ug/kg	D U	21.000	ug/kg	C U
1,1,2-Trichloroethane	12.000	ug/kg	C U	19.000	ug/kg	D U	21.000	ug/kg	C U
1,1-Dichloroethane	12.000	ug/kg	C U	19.000	ug/kg	D U	21.000	ug/kg	C U
1,1-Dichloroethene	12.000	ug/kg	C U	19.000	ug/kg	D U	21.000	ug/kg	C U
1,2-Dichloroethane	12.000	ug/kg	C U	19.000	ug/kg	D U	21.000	ug/kg	C U
1,2-Dichloroethene	12.000	ug/kg	C U	19.000	ug/kg	D U	21.000	ug/kg	C U
1,2-Dichloropropane	12.000	ug/kg	C U	19.000	ug/kg	D U	21.000	ug/kg	C U
2-Butanone	12.000	ug/kg	C U	19.000	ug/kg	D U	21.000	ug/kg	C U
2-Hexanone	12.000	ug/kg	C U	19.000	ug/kg	D U	21.000	ug/kg	C U
4-Methyl-2-pentanone	12.000	ug/kg	C U	19.000	ug/kg	D U	21.000	ug/kg	C U
Acetone	12.000	ug/kg	C U	19.000	ug/kg	D U	21.000	ug/kg	C U
Benzene	12.000	ug/kg	C U	19.000	ug/kg	D U	21.000	ug/kg	C U

TABLE D-3A
(Continued)

PHASE II - CHEMICAL PARAMETERS

BORING NUMBER	LSP-TR-02				LSP-SS-09				LSP-SS-10			
SAMPLE NUMBER	114591				114598				114881			
	0-0.5				0-0.5				0-0.5			
SAMPLING DATE	05/16/93				05/19/93				06/14/93			
CHEMICAL PARAMETERS	RESULTS	UNITS	L	VQ	RESULTS	UNITS	L	VQ	RESULTS	UNITS	L	VQ
Volatile Organics												
Bromodichloromethane	12.000	ug/kg	C	U	19.000	ug/kg	D	U	21.000	ug/kg	C	U
Bromoform	12.000	ug/kg	C	U	19.000	ug/kg	D	U	21.000	ug/kg	C	U
Bromomethane	12.000	ug/kg	C	U	19.000	ug/kg	D	U	21.000	ug/kg	C	U
Carbon Tetrachloride	12.000	ug/kg	C	U	19.000	ug/kg	D	U	21.000	ug/kg	C	U
Carbon disulfide	12.000	ug/kg	C	U	19.000	ug/kg	D	U	21.000	ug/kg	C	U
Chlorobenzene	12.000	ug/kg	C	U	19.000	ug/kg	D	U	21.000	ug/kg	C	U
Chloroethane	12.000	ug/kg	C	U	19.000	ug/kg	D	U	21.000	ug/kg	C	U
Chloroform	12.000	ug/kg	C	U	19.000	ug/kg	D	U	21.000	ug/kg	C	U
Chloromethane	12.000	ug/kg	C	UJ	19.000	ug/kg	D	UJ	21.000	ug/kg	C	U
Dibromochloromethane	12.000	ug/kg	C	U	19.000	ug/kg	D	U	21.000	ug/kg	C	U
Ethylbenzene	12.000	ug/kg	C	U	19.000	ug/kg	D	U	21.000	ug/kg	C	U
Methylene chloride	16.000	ug/kg	C	U	29.000	ug/kg	D	U	21.000	ug/kg	C	UJ
Styrene	12.000	ug/kg	C	U	19.000	ug/kg	D	U	21.000	ug/kg	C	U
Tetrachloroethene	12.000	ug/kg	C	U	19.000	ug/kg	D	U	21.000	ug/kg	C	U
Toluene	12.000	ug/kg	C	U	19.000	ug/kg	D	U	21.000	ug/kg	C	U
Trichloroethene	12.000	ug/kg	C	U	19.000	ug/kg	D	U	21.000	ug/kg	C	U
Vinyl Acetate	12.000	ug/kg	C	U	19.000	ug/kg	D	U	21.000	ug/kg	C	U
Vinyl chloride	12.000	ug/kg	C	U	19.000	ug/kg	D	U	21.000	ug/kg	C	U
Xylenes, Total	12.000	ug/kg	C	U	19.000	ug/kg	D	U	21.000	ug/kg	C	U
cis-1,3-Dichloropropene	12.000	ug/kg	C	U	19.000	ug/kg	D	U	21.000	ug/kg	C	U
trans-1,3-Dichloropropene	12.000	ug/kg	C	U	19.000	ug/kg	D	U	21.000	ug/kg	C	U
Semivolatile Organics												
1,2,4-Trichlorobenzene	430.000	ug/kg	C	U	640.000	ug/kg	D	U	690.000	ug/kg	C	U
1,2-Dichlorobenzene	430.000	ug/kg	C	U	640.000	ug/kg	D	U	690.000	ug/kg	C	U
1,3-Dichlorobenzene	430.000	ug/kg	C	U	640.000	ug/kg	D	U	690.000	ug/kg	C	U
1,4-Dichlorobenzene	430.000	ug/kg	C	U	640.000	ug/kg	D	U	690.000	ug/kg	C	U
2,4,5-Trichlorophenol	1000.000	ug/kg	C	U	1600.000	ug/kg	D	U	1700.000	ug/kg	C	R
2,4,6-Trichlorophenol	430.000	ug/kg	C	U	640.000	ug/kg	D	U	690.000	ug/kg	C	R
2,4-Dichlorophenol	430.000	ug/kg	C	U	640.000	ug/kg	D	U	690.000	ug/kg	C	R
2,4-Dimethylphenol	430.000	ug/kg	C	U	640.000	ug/kg	D	U	690.000	ug/kg	C	R
2,4-Dinitrophenol	1000.000	ug/kg	C	UJ	1600.000	ug/kg	D	UJ	3300.000	ug/kg	C	R
2,4-Dinitrotoluene	430.000	ug/kg	C	U	640.000	ug/kg	D	U	690.000	ug/kg	C	U
2,6-Dinitrotoluene	430.000	ug/kg	C	U	640.000	ug/kg	D	U	690.000	ug/kg	C	U
2-Benzyl-4-chlorophenol	NA				NA				690.000	ug/kg	C	R
2-Chloronaphthalene	430.000	ug/kg	C	U	640.000	ug/kg	D	U	690.000	ug/kg	C	U
2-Chlorophenol	430.000	ug/kg	C	U	640.000	ug/kg	D	U	690.000	ug/kg	C	R
2-Methylnaphthalene	430.000	ug/kg	C	U	640.000	ug/kg	D	U	690.000	ug/kg	C	U
2-Methylphenol	430.000	ug/kg	C	U	640.000	ug/kg	D	U	690.000	ug/kg	C	R
2-Nitroaniline	1000.000	ug/kg	C	U	1600.000	ug/kg	D	U	1700.000	ug/kg	C	UJ
2-Nitrophenol	430.000	ug/kg	C	U	640.000	ug/kg	D	U	690.000	ug/kg	C	R

TABLE D-3A
(Continued)

PHASE II - CHEMICAL PARAMETERS

BORING NUMBER	LSP-TR-02				LSP-SS-09				LSP-SS-10			
SAMPLE NUMBER	114591				114598				114881			
	0-0.5				0-0.5				0-0.5			
SAMPLING DATE	05/16/93				05/19/93				06/14/93			
CHEMICAL PARAMETERS	RESULTS	UNITS	L	VQ	RESULTS	UNITS	L	VQ	RESULTS	UNITS	L	VQ
Semivolatile Organics												
3,3'-Dichlorobenzidine	430.000	ug/kg	C	U	640.000	ug/kg	D	U	690.000	ug/kg	C	U
3-Nitroaniline	1000.000	ug/kg	C	U	1600.000	ug/kg	D	U	1700.000	ug/kg	C	U
4,6-Dinitro-2-methylphenol	1000.000	ug/kg	C	U	1600.000	ug/kg	D	U	1700.000	ug/kg	C	R
4-Bromophenyl phenyl ether	430.000	ug/kg	C	U	640.000	ug/kg	D	U	690.000	ug/kg	C	U
4-Chloro-3-methylphenol	430.000	ug/kg	C	U	640.000	ug/kg	D	U	690.000	ug/kg	C	R
4-Chlorophenylphenyl ether	430.000	ug/kg	C	U	640.000	ug/kg	D	U	690.000	ug/kg	C	U
4-Methylphenol	430.000	ug/kg	C	U	640.000	ug/kg	D	U	690.000	ug/kg	C	R
4-Nitroaniline	1000.000	ug/kg	C	U	1600.000	ug/kg	D	U	1700.000	ug/kg	C	UJ
4-Nitrophenol	1000.000	ug/kg	C	U	1600.000	ug/kg	D	U	1700.000	ug/kg	C	U
Acenaphthene	430.000	ug/kg	C	U	640.000	ug/kg	D	U	690.000	ug/kg	C	U
Acenaphthylene	430.000	ug/kg	C	U	640.000	ug/kg	D	U	690.000	ug/kg	C	U
Anthracene	56.000	ug/kg	C	J	640.000	ug/kg	D	U	690.000	ug/kg	C	U
Benzo(a)anthracene	610.000	ug/kg	C	-	640.000	ug/kg	D	U	690.000	ug/kg	C	U
Benzo(a)pyrene	350.000	ug/kg	C	J	640.000	ug/kg	D	U	690.000	ug/kg	C	U
Benzo(b)fluoranthene	500.000	ug/kg	C	-	640.000	ug/kg	D	U	690.000	ug/kg	C	U
Benzo(g,h,i)perylene	170.000	ug/kg	C	J	640.000	ug/kg	D	U	690.000	ug/kg	C	U
Benzo(k)fluoranthene	450.000	ug/kg	C	-	640.000	ug/kg	D	U	690.000	ug/kg	C	U
Benzoic acid	NA				NA				3300.000	ug/kg	C	U
Benzyl alcohol	NA				NA				690.000	ug/kg	C	R
Butyl benzyl phthalate	430.000	ug/kg	C	U	640.000	ug/kg	D	U	690.000	ug/kg	C	U
Carbazole	430.000	ug/kg	C	U	640.000	ug/kg	D	U	690.000	ug/kg	C	U
Chrysene	660.000	ug/kg	C	-	640.000	ug/kg	D	U	690.000	ug/kg	C	U
Di-n-butyl phthalate	430.000	ug/kg	C	U	120.000	ug/kg	D	J	690.000	ug/kg	C	U
Di-n-octyl phthalate	430.000	ug/kg	C	U	640.000	ug/kg	D	U	690.000	ug/kg	C	U
Dibenzo(a,h)anthracene	110.000	ug/kg	C	J	640.000	ug/kg	D	U	690.000	ug/kg	C	U
Dibenzofuran	430.000	ug/kg	C	U	640.000	ug/kg	D	U	690.000	ug/kg	C	U
Diethyl phthalate	430.000	ug/kg	C	U	640.000	ug/kg	D	U	690.000	ug/kg	C	U
Dimethyl phthalate	430.000	ug/kg	C	U	640.000	ug/kg	D	U	690.000	ug/kg	C	U
Fluoranthene	1300.000	ug/kg	C	-	640.000	ug/kg	D	U	690.000	ug/kg	C	U
Fluorene	430.000	ug/kg	C	U	640.000	ug/kg	D	U	690.000	ug/kg	C	U
Hexachlorobenzene	430.000	ug/kg	C	U	640.000	ug/kg	D	U	690.000	ug/kg	C	U
Hexachlorobutadiene	430.000	ug/kg	C	U	640.000	ug/kg	D	U	690.000	ug/kg	C	UJ
Hexachlorocyclopentadiene	430.000	ug/kg	C	UJ	640.000	ug/kg	D	UJ	690.000	ug/kg	C	U
Hexachloroethane	430.000	ug/kg	C	U	640.000	ug/kg	D	U	690.000	ug/kg	C	U
Indeno(1,2,3-cd)pyrene	210.000	ug/kg	C	J	640.000	ug/kg	D	U	690.000	ug/kg	C	U
Isophorone	430.000	ug/kg	C	U	640.000	ug/kg	D	U	690.000	ug/kg	C	U
N-Nitroso-di-n-propylamine	430.000	ug/kg	C	U	640.000	ug/kg	D	U	690.000	ug/kg	C	UJ
N-Nitrosodimethylamine	NA				NA				690.000	ug/kg	C	UJ
N-Nitrosodiphenylamine	430.000	ug/kg	C	U	640.000	ug/kg	D	U	690.000	ug/kg	C	U
Naphthalene	430.000	ug/kg	C	U	640.000	ug/kg	D	U	690.000	ug/kg	C	U
Nitrobenzene	430.000	ug/kg	C	U	640.000	ug/kg	D	U	690.000	ug/kg	C	U
Pentachlorophenol	1000.000	ug/kg	C	U	1600.000	ug/kg	D	U	1700.000	ug/kg	C	R

TABLE D-3A
(Continued)

PHASE II - CHEMICAL PARAMETERS

BORING NUMBER	LSP-TR-02				LSP-SS-09				LSP-SS-10			
SAMPLE NUMBER	114591				114598				114881			
	0-0.5				0-0.5				0-0.5			
SAMPLING DATE	05/16/93				05/19/93				06/14/93			
CHEMICAL PARAMETERS	RESULTS	UNITS	L	VQ	RESULTS	UNITS	L	VQ	RESULTS	UNITS	L	VQ
Semivolatile Organics												
Phenanthrene	250.000	ug/kg	C	J	640.000	ug/kg	D	U	690.000	ug/kg	C	U
Phenol	430.000	ug/kg	C	U	640.000	ug/kg	D	U	690.000	ug/kg	C	R
Pyrene	1000.000	ug/kg	C	-	640.000	ug/kg	D	U	690.000	ug/kg	C	U
Tributyl phosphate	NA				NA				690.000	ug/kg	C	U
bis(2-Chloroethoxy)methane	430.000	ug/kg	C	U	640.000	ug/kg	D	U	690.000	ug/kg	C	U
bis(2-Chloroethyl)ether	430.000	ug/kg	C	U	640.000	ug/kg	D	U	690.000	ug/kg	C	U
bis(2-Chloroisopropyl) ether	430.000	ug/kg	C	U	640.000	ug/kg	D	U	690.000	ug/kg	C	U
bis(2-Ethylhexyl) phthalate	430.000	ug/kg	C	U	390.000	ug/kg	D	J	350.000	ug/kg	C	J
p-Chloroaniline	430.000	ug/kg	C	U	640.000	ug/kg	D	U	690.000	ug/kg	C	U
Pesticide Organics/PCBs												
4,4'-DDD	4.200	ug/kg	C	U	6.400	ug/kg	D	U	7.000	ug/kg	C	U
4,4'-DDE	4.200	ug/kg	C	UJ	6.400	ug/kg	D	U	7.000	ug/kg	C	U
4,4'-DDT	4.200	ug/kg	C	U	6.400	ug/kg	D	U	7.000	ug/kg	C	UJ
Aldrin	2.200	ug/kg	C	U	3.300	ug/kg	D	U	3.600	ug/kg	C	U
Aroclor-1016	42.000	ug/kg	C	U	64.000	ug/kg	D	U	70.000	ug/kg	C	U
Aroclor-1221	85.000	ug/kg	C	U	130.000	ug/kg	D	U	140.000	ug/kg	C	U
Aroclor-1232	42.000	ug/kg	C	U	64.000	ug/kg	D	U	70.000	ug/kg	C	U
Aroclor-1242	42.000	ug/kg	C	U	64.000	ug/kg	D	U	70.000	ug/kg	C	U
Aroclor-1248	42.000	ug/kg	C	U	64.000	ug/kg	D	U	70.000	ug/kg	C	U
Aroclor-1254	42.000	ug/kg	C	U	64.000	ug/kg	D	U	70.000	ug/kg	C	U
Aroclor-1260	42.000	ug/kg	C	U	64.000	ug/kg	D	U	70.000	ug/kg	C	U
Dieldrin	4.200	ug/kg	C	U	6.400	ug/kg	D	U	7.000	ug/kg	C	U
Endosulfan II	4.200	ug/kg	C	U	6.400	ug/kg	D	U	7.000	ug/kg	C	U
Endosulfan sulfate	4.200	ug/kg	C	U	6.400	ug/kg	D	U	7.000	ug/kg	C	U
Endosulfan-I	2.200	ug/kg	C	U	3.300	ug/kg	D	U	3.600	ug/kg	C	U
Endrin	4.200	ug/kg	C	U	6.400	ug/kg	D	U	7.000	ug/kg	C	U
Endrin aldehyde	4.200	ug/kg	C	U	6.400	ug/kg	D	U	7.000	ug/kg	C	U
Endrin ketone	4.200	ug/kg	C	U	6.400	ug/kg	D	U	7.000	ug/kg	C	U
Heptachlor	2.200	ug/kg	C	U	3.300	ug/kg	D	U	3.600	ug/kg	C	U
Heptachlor epoxide	2.200	ug/kg	C	U	3.300	ug/kg	D	U	3.600	ug/kg	C	U
Methoxychlor	22.000	ug/kg	C	U	33.000	ug/kg	D	U	36.000	ug/kg	C	U
Toxaphene	220.000	ug/kg	C	U	330.000	ug/kg	D	U	360.000	ug/kg	C	U
alpha-BHC	2.200	ug/kg	C	U	3.300	ug/kg	D	U	3.600	ug/kg	C	U
alpha-Chlordane	2.200	ug/kg	C	U	3.300	ug/kg	D	U	3.600	ug/kg	C	U
beta-BHC	2.200	ug/kg	C	U	3.300	ug/kg	D	U	3.600	ug/kg	C	U
delta-BHC	2.200	ug/kg	C	UJ	3.300	ug/kg	D	U	3.600	ug/kg	C	U
gamma-BHC (Lindane)	2.200	ug/kg	C	U	3.300	ug/kg	D	U	3.600	ug/kg	C	U
gamma-Chlordane	2.200	ug/kg	C	U	3.300	ug/kg	D	U	3.600	ug/kg	C	U

TABLE D-3B
LIME SLUDGE PONDS
TENTATIVELY IDENTIFIED COMPOUNDS
SURFACE SOIL

Sample Number	Sample Location	Parameter	Result	Units
114474	LSP-SS-04	methane, thiobis	21	ug/kg
114498	LSP-SS-11	3-hexen-2-one, 5-methyl-	15	ug/kg
114498	LSP-SS-11	hexanedioic acid, doictyl es	25	ug/kg
114501	LSP-SS-12	tetratetracontane	110	ug/kg
114501	LSP-SS-12	tetratetracontane	230	ug/kg
114501	LSP-SS-12	hexanedioic acid, doictyl es	680	ug/kg
114501	LSP-SS-12	heptadecane, 2,6,10,15-tetra	220	ug/kg
114501	LSP-SS-12	tetratetracontane	170	ug/kg
114501	LSP-SS-12	tetratetracontane	180	ug/kg
114501	LSP-SS-12	tritetracontane	340	ug/kg
114501	LSP-SS-12	tritetracontane	780	ug/kg
114503	LSP-SS-12	3-hexen-2-one, 5-methyl-	450	ug/kg
114503	LSP-SS-12	tetratetracontane	88	ug/kg
114503	LSP-SS-12	tetratetracontane	140	ug/kg
114503	LSP-SS-12	hexanedioic acid, mono(2-eth	2700	ug/kg
114503	LSP-SS-12	tetratetracontane	160	ug/kg
114498	LSP-SS-11	3-hexen-2-one, 5-methyl-	1300	ug/kg
114498	LSP-SS-11	ethanone, 1-oxiranyl-	170	ug/kg
114498	LSP-SS-11	1,2-ethanediol, monoacetate	84	ug/kg
114498	LSP-SS-11	1,2-benzenedicarboxylic acid	180	ug/kg
114498	LSP-SS-11	anthracene, 2-methyl-	110	ug/kg
114498	LSP-SS-11	4h-cyclopenta def phenanthre	260	ug/kg
114498	LSP-SS-11	11h-benzo-a-fluorene	220	ug/kg
114498	LSP-SS-11	11h-benzo-a-fluorene	130	ug/kg
114498	LSP-SS-11	pyrene, 1-methyl-	91	ug/kg
114498	LSP-SS-11	tritetracontane	100	ug/kg
114498	LSP-SS-11	tetratetracontane	200	ug/kg
114498	LSP-SS-11	3,4-dihydrocyclopenta(cd)pyr	97	ug/kg
114498	LSP-SS-11	tritetracontane	100	ug/kg
114498	LSP-SS-11	eicosane, 2-methyl-	150	ug/kg
114498	LSP-SS-11	octadecane, 9-ethyl-9-heptyl	380	ug/kg
114516	LSP-SS-14	3-hexen-2-one, 5-methyl-	960	ug/kg
114516	LSP-SS-14	ethanone, 1-oxiranyl-	120	ug/kg
114516	LSP-SS-14	anthracene, 2-methyl-	110	ug/kg
114516	LSP-SS-14	4h-cyclopenta def phenanthre	330	ug/kg
114516	LSP-SS-14	9,10-anthracenedione	150	ug/kg
114516	LSP-SS-14	11h-benzo-a-fluorene	130	ug/kg
114516	LSP-SS-14	tetratetracontane	140	ug/kg
114516	LSP-SS-14	11h-benzo-a-fluorene	280	ug/kg
114516	LSP-SS-14	11h-benzo-a-fluorene	120	ug/kg
114516	LSP-SS-14	tetratetracontane	240	ug/kg
114516	LSP-SS-14	tetratetracontane	440	ug/kg
114516	LSP-SS-14	3,4-dihydrocyclopenta(cd)pyr	130	ug/kg
114516	LSP-SS-14	tetratetracontane	210	ug/kg
114516	LSP-SS-14	tetratetracontane	200	ug/kg
114516	LSP-SS-14	tritetracontane	160	ug/kg
114516	LSP-SS-14	eicosane, 2-methyl-	190	ug/kg
114516	LSP-SS-14	octadecane, 9-ethyl-9-heptyl	390	ug/kg
114591	LSP-SS-02	cyclotetrasiloxane, octameth	150	ug/kg
114591	LSP-SS-02	2-cyclohexen-1-one, 3,5-dime	270	ug/kg
114591	LSP-SS-02	1,2-benzenedicarboxylic acid	130	ug/kg
114591	LSP-SS-02	11h-benzo-a-fluorene	99	ug/kg
114591	LSP-SS-02	7h-benz-de-anthracen-7-one	140	ug/kg

TABLE D-4

TABLE D-4

LIME SLUDGE PONDS
CIS SURFACE SOIL RADIOLOGICAL RESULTS
OPERABLE UNIT 2 REMEDIAL INVESTIGATION
FERNALD ENVIRONMENTAL MANAGEMENT PROJECT

FEMP ID #	SS46187			SS23012			SS23013		
Depth	0-6"			0-6"			0-6"		
Date	02/13/87			11/06/86			11/06/86		
Isotope	Activity (pCi/g)	Uncertainty	Validation Qualifier	Activity (pCi/g)	Uncertainty	Lab Qualifier	Activity (pCi/g)	Uncertainty	Lab Qualifier
Cesium-137	0.58	±0.27		0.60	NA	<	2.30	.60	
Neptunium-237	0.34	NA	U	0.10	NA	<	2.70	.50	
Lead-210	44.00	3.00		30.00	2.00		12.00	1.00	
Plutonium-239/240	0.18	NA	U	0.10	NA	<	0.20	.10	
Plutonium-238	0.31	±0.17	J	0.10	NA	<	0.30	.10	
Radium-226				29.39	1.93		9.64	1.30	
Radium-228									
Ruthenium-106	2.04	NA	U	3.00	NA	<	2.00	NA	<
Strontium-90	0.3	NA	U	0.50	NA	<	0.70	NA	<
Technetium-99	0.9	NA	U	.20	NA	<	91.00	4.00	
Thorium-230	31.4	±1.04	J	13.00	1.00		21.00	1.00	
Thorium-232	2.80	±0.31	J	.20	.10		.50	.10	
Thorium-228	3.42	±0.35	J	.40	.10		3.30	.30	
Uranium-238	86.5	±1.05	J	27.00	1.00		83.00	2.00	
Uranium-234	23.8	±0.55	J	25.00	1.00		84.00	2.00	
Uranium-235	1.78	±0.15	J	1.00	.10		3.80	.30	

[a]Laboratory Qualifiers, no data validation was performed on screening data.

[b]NA = Not applicable

[c]< = Less than

FER\CRU2RI\JLG\TABD-4\January 6, 1995 10:52am

000707

TABLE D-5

TABLE D-5

LIME SLUDGE PONDS
SURFACE MEDIA ANALYSES ENVIRONMENTAL SURVEY
OPERABLE UNIT 2 REMEDIAL INVESTIGATION
FERNALD ENVIRONMENTAL MANAGEMENT PROJECT

Analyte	616 FEO616SS1B	617 FEO617SS1B	617 FEO617SS2B	618 FEO618SS1B	619 FEO619SS1B
Asbestos	NA	NA	NA	NA	NA
TCLP METALS (mg/L)					
Arsenic	<0.5	<0.5	<0.5	<0.5	<0.5
Barium	0.36	0.28	0.27	0.29	0.29
Cadmium	<0.02	<0.02	<0.02	<0.02	<0.02
Chromium	0.05	0.04	0.04	0.04	0.03
Lead	<0.3	<0.3	<0.3	<0.3	<0.3
Mercury	<0.001	<0.001	<0.001	<0.001	<0.001
Selenium	<0.5	<0.5	<0.5	<0.5	<0.5
Silver	<0.1	<0.1	<0.1	<0.1	<0.1

Analyte	616 FEO616SS3B	617 FEO617SS3B	618 FEO618SS3B	619 FEO619SS3B
VOLATILE ORGANIC COMPOUNDS (µg/kg)				
1,1-Dichloroethane	<5	<5	<5	<5
1,1,1-Tricloroethane	<5	14	9	9
1,1,2-Trichloroethane	<5	<5	<5	<5
1,1,2,2-Tetrachloroethane	<5	<5	<5	<5
1,2-Dichloropropane	<5	<5	<5	<5
1,2-Dichloroethane	<5	<5	<5	<5
2-Chloroethylvinyl ether	<10	<10	<10	<10
2-Butanone	<10	<10	<10	<10
2-Hexanone	<10	<10	<10	<10
4-Methyl-2-pentanone	<10	<10	<10	<10
Acetone	18 B	19 B	21 B	25 B
Benzene	<5	<5	<5	<5
Bromodichloromethane	<5	<5	<5	<5
Bromoform	<5	<5	<5	<5
Bromomethane	<10	<10	<10	<10
Carbon tetrachloride	<5	<5	<5	<5
Carbon disulfide	<5	<5	<5	<5
Chlorobenzene	<5	<5	<5	<5
Chloroethane	<10	<10	<10	<10
Chloroform	7	11	7	8
Chloromethane	<10	<10	<10	<10
Cis-1,3-dichloropropene	<5	<5	<5	<5
Dibromochloromethane	<5	<5	<5	<5
Ethyl benzene	<5	<5	<5	<5
Methylene chloride	8 B	12 B	14 B	22 B
Styrene	<5	<5	<5	<5
Tetrachloroethene	<5	<5	<5	<5
Toluene	3 BJ	3 BJ	3 BJ	3 BJ
Total xylenes	<5	<5	<5	<5
Trans-1,3-dichloropropene	<5	<5	<5	<5
Trans-1,2-dichloroethene	<5	<5	<5	<5
Trichloroethene	<5	<5	<5	<5

See notes at end of table

TABLE D-5
(Continued)

Analyte	616 FEO616SS3B	617 FEO617SS3B	618 FEO618SS3B	619 FEO619SS3B
PCBs (mg/kg)				
Aroclor-1242	NA	NA	NA	NA
Aroclor-1248	NA	NA	NA	NA
Aroclor-1254	NA	NA	NA	NA
Aroclor-1260	NA	NA	NA	NA

Analyte	616 FEO617SS2B	617 FEO617SS1B	617 FEO617SS2B	618 FEO619SS2B	619 FEO619SS2B
RADIONUCLIDES (pCi/g)					
Bismuth-214	I	0.4±0.09	NA	I	0.27±0.04
Cesium-137	I	0.27±0.04	NA	I	0.21±0.02
Radium-226	I	0.38±0.07	NA	I	0.27±0.03
Thorium-228	I	I	NA	I	I
Thorium-232	I	I	NA	I	I
Uranium-235	N	NA	0.18±0.02	N	0.44±0.02
Uranium-238	N	NA	1.6±0.3	41±6	22±4
Total uranium (mg/kg)	14	19	17	36	28

NA = Not Analyzed

N = Nuclide not identified by GAMANAL analysis as being present in the sample; no value reported.

I = Nuclide identified by GAMANAL analysis of sample spectrum, but values did not exceed room background at the 95% confidence level; no value reported

B = Analyte was found in the blank as well as the sample

J = Estimated value of compound present but less than the specified detection limit

G = Gamma Spectroscopy Analysis

ND = None detected

TABLE D-6

TABLE D-6A

LIME SLUDGE PONDS
RI/FS SUSBURFACE SOIL RESULTS
OPERABLE UNIT 2 REMEDIAL INVESTIGATION
FERNALD ENVIRONMENTAL MANAGEMENT PROJECT

PHASE I - RADIOLOGICAL PARAMETERS

BORING NUMBER	1039			1041			2042		
SAMPLE NUMBER	008439			008448			008869		
	12 - 13.5			0 - 1.5			3 - 4.5		
SAMPLING DATE	04/08/88			04/10/88			04/11/88		
RADIOLOGICAL PARAMETERS	RESULTS	UNITS	VQ	RESULTS	UNITS	VQ	RESULTS	UNITS	VQ
CS-137	0.200	pci/g	UJ	0.200	pci/g	UJ	0.200	pci/g	UJ
NP-237	0.600	pci/g	U	0.600	pci/g	U	0.600	pci/g	UJ
PU-238	0.600	pci/g	U	0.600	pci/g	U	0.600	pci/g	U
PU-239/240	0.600	pci/g	U	0.600	pci/g	U	0.600	pci/g	U
RA-226	0.900	pci/g	J	1.100	pci/g	J	1.000	pci/g	J
RA-228	0.500	pci/g	UJ	0.900	pci/g	J	1.200	pci/g	J
RU-106	1.000	pci/g	UJ	1.000	pci/g	UJ	1.000	pci/g	UJ
SR-90	0.500	pci/g	U	0.500	pci/g	U	6.000	pci/g	J
TC-99	0.900	pci/g	U	0.900	pci/g	NV	0.900	pci/g	UJ
TH-228	0.700	pci/g	J	1.300	pci/g	-	1.000	pci/g	J
TH-230	1.500	pci/g	-	3.800	pci/g	-	2.300	pci/g	J
TH-232	0.900	pci/g	-	1.500	pci/g	-	1.300	pci/g	J
U-234	0.800	pci/g	J	3.800	pci/g	J	0.800	pci/g	-
U-235/236	0.600	pci/g	UJ	0.600	pci/g	UJ	0.600	pci/g	U
U-238	0.700	pci/g	J	5.900	pci/g	J	0.900	pci/g	-

TABLE D-6A
(Continued)

PHASE I - RADIOLOGICAL PARAMETERS

BORING NUMBER	2042			1717			1716		
SAMPLE NUMBER	008509			067902			067904		
	45 - 46.5			0 - 2			0 - 2		
SAMPLING DATE	04/12/88			11/06/91			11/06/91		
RADIOLOGICAL PARAMETERS	RESULTS	UNITS	VQ	RESULTS	UNITS	VQ	RESULTS	UNITS	VQ
CS-137	0.200	pci/g	UJ	0.200	pci/g	U	0.200	pci/g	U
GROSS ALPHA	NA			12.600	pci/g	NV	5.660	pci/g	NV
GROSS BETA	NA			5.800	pci/g	NV	5.700	pci/g	NV
NP-237	0.600	pci/g	UJ	NA			NA		
PU-238	0.600	pci/g	U	0.600	pci/g	UJ	0.600	pci/g	UJ
PU-239/240	0.600	pci/g	U	0.600	pci/g	R	0.600	pci/g	R
RA-226	0.400	pci/g	J	0.350	pci/g	J	0.300	pci/g	U
RA-228	0.500	pci/g	UJ	0.500	pci/g	U	0.500	pci/g	U
RU-106	1.000	pci/g	UJ	1.000	pci/g	U	1.000	pci/g	U
SR-90	0.500	pci/g	UJ	0.500	pci/g	U	0.500	pci/g	U
TC-99	0.900	pci/g	UJ	0.900	pci/g	R	0.900	pci/g	R
TH-228	0.600	pci/g	U	1.460	pci/g	J	1.040	pci/g	J
TH-230	1.300	pci/g	J	1.200	pci/g	UJ	0.600	pci/g	UJ
TH-232	0.600	pci/g	U	0.600	pci/g	U	0.600	pci/g	U
TH-TOTAL	NA			1.200	ug/g	U	1.000	ug/g	U
U-234	0.600	pci/g	U	0.866	pci/g	J	1.570	pci/g	J
U-235	NA			0.600	pci/g	U	0.600	pci/g	U
U-235/236	0.600	pci/g	U	0.600	pci/g	UJ	0.600	pci/g	UJ
U-238	0.600	pci/g	U	0.712	pci/g	-	1.330	pci/g	-
U-TOTAL	NA			2.080	mg/kg	J	5.490	mg/kg	-

000721

TABLE D-6A
(Continued)

PHASE I - CHEMICAL PARAMETERS

BORING NUMBER	1717				1716			
SAMPLE NUMBER	067902				067904			
	0-2				0-2			
SAMPLING DATE	11/06/91				11/06/91			
CHEMICAL PARAMETERS	RESULTS	UNITS	L	VQ	RESULTS	UNITS	L	VQ
Inorganics								
Aluminum	2700.000	mg/kg	D	-	4580.000	mg/kg	D	J
Antimony	20.000	mg/kg	D	-	22.100	mg/kg	D	J
Arsenic	1.700	mg/kg	D	-	4.200	mg/kg	D	J
Barium	63.400	mg/kg	D	-	71.100	mg/kg	D	J
Beryllium	0.650	mg/kg	D	J	0.760	mg/kg	D	J
Boron	28.900	mg/kg	D	J	37.000	mg/kg	D	J
Cadmium	2.500	mg/kg	D	J	4.000	mg/kg	D	J
Calcium	339000.000	mg/kg	D	J	323000.000	mg/kg	D	J
Chromium	28.100	mg/kg	D	J	28.200	mg/kg	D	J
Cobalt	3.900	mg/kg	D	J	5.100	mg/kg	D	J
Copper	8.400	mg/kg	D	J	20.500	mg/kg	D	J
Cyanide	1.700	mg/kg	D	J	0.240	mg/kg	D	UJ
Iron	3240.000	mg/kg	D	-	3980.000	mg/kg	D	J
Lead	0.980	mg/kg	D	J	2.000	mg/kg	D	J
Magnesium	13300.000	mg/kg	D	-	19600.000	mg/kg	D	J
Manganese	499.000	mg/kg	D	-	515.000	mg/kg	D	J
Mercury	0.140	mg/kg	D	UJ	0.190	mg/kg	D	UJ
Molybdenum	5.700	mg/kg	D	J	8.200	mg/kg	D	J
Nickel	9.000	mg/kg	D	J	11.700	mg/kg	D	J
Potassium	22.200	mg/kg	D	U	68.700	mg/kg	D	J
Selenium	0.450	mg/kg	D	UJ	0.460	mg/kg	D	UJ
Silicon	3220.000	mg/kg	D	-	5920.000	mg/kg	D	J
Silver	21.700	mg/kg	D	J	22.000	mg/kg	D	J
Sodium	327.000	mg/kg	D	-	599.000	mg/kg	D	J
Thallium	0.450	mg/kg	D	UJ	0.510	mg/kg	D	J
Tin	44.500	mg/kg	D	U	45.700	mg/kg	D	UJ
Vanadium	17.100	mg/kg	D	J	17.500	mg/kg	D	J
Zinc	8.200	mg/kg	D	J	13.800	mg/kg	D	J
Volatile Organics								
1,1,1,2-Tetrachloroethane	17.000	ug/kg	D	U	23.000	ug/kg	D	U
1,1,1-Trichloroethane	8.000	ug/kg	D	U	12.000	ug/kg	D	U
1,1,2,2-Tetrachloroethane	8.000	ug/kg	D	U	12.000	ug/kg	D	U
1,1,2-Trichloroethane	8.000	ug/kg	D	U	12.000	ug/kg	D	U
1,1-Dichloroethane	8.000	ug/kg	D	U	12.000	ug/kg	D	U
1,1-Dichloroethene	8.000	ug/kg	D	U	12.000	ug/kg	D	U
1,2,3-Trichloropropane	17.000	ug/kg	C	U	23.000	ug/kg	D	U
1,2-Dibromo-3-chloropropane	17.000	ug/kg	D	U	23.000	ug/kg	D	U
1,2-Dibromoethane	17.000	ug/kg	D	U	23.000	ug/kg	D	U
1,2-Dichloroethane	8.000	ug/kg	D	U	12.000	ug/kg	D	U
1,2-Dichloroethene	8.000	ug/kg	D	U	12.000	ug/kg	D	U

TABLE D-6A
(Continued)

PHASE I - CHEMICAL PARAMETERS

BORING NUMBER	1717				1716			
SAMPLE NUMBER	067902				067904			
	0-2				0-2			
SAMPLING DATE	11/06/91				11/06/91			
CHEMICAL PARAMETERS	RESULTS	UNITS	L	VQ	RESULTS	UNITS	L	VQ
Volatile Organics								
1,2-Dichloropropane	8.000	ug/kg	D	U	12.000	ug/kg	D	U
1,4-Dioxane	330.000	ug/kg	D	R	470.000	ug/kg	D	R
2-Butanone	17.000	ug/kg	D	U	23.000	ug/kg	D	U
2-Chloro-1,3-butadiene	17.000	ug/kg	D	UJ	23.000	ug/kg	D	UJ
2-Hexanone	2.000	ug/kg	D	J	23.000	ug/kg	D	U
3-Chloropropene	17.000	ug/kg	D	UJ	23.000	ug/kg	D	UJ
4-Methyl-2-pentanone	17.000	ug/kg	D	U	23.000	ug/kg	D	U
Acetone	17.000	ug/kg	D	U	23.000	ug/kg	D	U
Acetonitrile	33.000	ug/kg	D	UJ	47.000	ug/kg	D	UJ
Acrolein	33.000	ug/kg	D	UJ	47.000	ug/kg	D	UJ
Acrylonitrile	33.000	ug/kg	D	R	47.000	ug/kg	D	R
Benzene	8.000	ug/kg	D	U	12.000	ug/kg	D	U
Bromodichloromethane	8.000	ug/kg	D	U	12.000	ug/kg	D	U
Bromoform	8.000	ug/kg	D	U	12.000	ug/kg	D	U
Bromomethane	17.000	ug/kg	D	U	23.000	ug/kg	D	U
Carbon Tetrachloride	8.000	ug/kg	D	U	12.000	ug/kg	D	U
Carbon disulfide	8.000	ug/kg	D	U	12.000	ug/kg	D	U
Chlorobenzene	8.000	ug/kg	D	U	12.000	ug/kg	D	U
Chloroethane	17.000	ug/kg	D	U	23.000	ug/kg	D	U
Chloroform	8.000	ug/kg	D	U	12.000	ug/kg	D	U
Chloromethane	17.000	ug/kg	D	UJ	23.000	ug/kg	D	UJ
Dibromochloromethane	8.000	ug/kg	D	U	12.000	ug/kg	D	U
Dibromomethane	17.000	ug/kg	D	U	23.000	ug/kg	D	U
Dichlorodifluoromethane	330.000	ug/kg	D	R	470.000	ug/kg	D	R
Ethyl cyanide	17.000	ug/kg	D	U	23.000	ug/kg	D	U
Ethyl methacrylate	17.000	ug/kg	D	U	23.000	ug/kg	D	U
Ethylbenzene	8.000	ug/kg	D	U	12.000	ug/kg	D	U
Iodomethane	17.000	ug/kg	D	U	23.000	ug/kg	D	U
Isobutyl alcohol	330.000	ug/kg	D	U	470.000	ug/kg	D	U
Methacrylonitrile	17.000	ug/kg	D	U	23.000	ug/kg	D	U
Methyl methacrylate	17.000	ug/kg	D	U	23.000	ug/kg	D	U
Methylene chloride	8.000	ug/kg	D	U	12.000	ug/kg	D	U
Pyridine	1100.000	ug/kg	D	U	1600.000	ug/kg	D	U
Styrene	8.000	ug/kg	D	U	12.000	ug/kg	D	U
Tetrachloroethene	8.000	ug/kg	D	U	12.000	ug/kg	D	U
Toluene	8.000	ug/kg	D	U	12.000	ug/kg	D	U
Trichloroethene	8.000	ug/kg	D	U	12.000	ug/kg	D	U
Trichlorofluoromethane	17.000	ug/kg	D	U	23.000	ug/kg	D	U
Vinyl Acetate	17.000	ug/kg	D	U	23.000	ug/kg	D	U
Vinyl chloride	17.000	ug/kg	D	U	23.000	ug/kg	D	U
Xylenes, Total	8.000	ug/kg	D	U	12.000	ug/kg	D	U
cis-1,3-Dichloropropene	8.000	ug/kg	D	U	12.000	ug/kg	D	U

TABLE D-6A
(Continued)

PHASE I - CHEMICAL PARAMETERS

BORING NUMBER	1717			1716		
SAMPLE NUMBER	067902			067904		
	0-2			0-2		
SAMPLING DATE	11/06/91			11/06/91		
CHEMICAL PARAMETERS	RESULTS	UNITS	L VQ	RESULTS	UNITS	L VQ
Volatile Organics						
trans-1,3-Dichloropropene	8.000	ug/kg	D U	12.000	ug/kg	D U
trans-1,4-Dichloro-2-butene	17.000	ug/kg	D UJ	23.000	ug/kg	D UJ
Semivolatile Organics						
1,2,4,5-Tetrachlorobenzene	1100.000	ug/kg	D U	1600.000	ug/kg	D U
1,2,4-Trichlorobenzene	1100.000	ug/kg	D U	1600.000	ug/kg	D U
1,2-Dichlorobenzene	1100.000	ug/kg	D U	1600.000	ug/kg	D U
1,3,5-Trinitrobenzene	1100.000	ug/kg	D U	1600.000	ug/kg	D U
1,3-Dichlorobenzene	1100.000	ug/kg	D U	1600.000	ug/kg	D U
1,3-Dinitrobenzene	1100.000	ug/kg	D U	1600.000	ug/kg	D U
1,4-Dichlorobenzene	1100.000	ug/kg	D U	1600.000	ug/kg	D U
1,4-Naphthoquinone	1100.000	ug/kg	D U	1600.000	ug/kg	D U
1-Naphthylamine	14000.000	ug/kg	D U	19000.000	ug/kg	D U
2,3,4,6-Tetrachlorophenol	1100.000	ug/kg	D UJ	1600.000	ug/kg	D UJ
2,4,5-Trichlorophenol	5400.000	ug/kg	D U	7700.000	ug/kg	D U
2,4,6-Trichlorophenol	1100.000	ug/kg	D U	1600.000	ug/kg	D U
2,4-Dichlorophenol	1100.000	ug/kg	D U	1600.000	ug/kg	D U
2,4-Dimethylphenol	1100.000	ug/kg	D U	1600.000	ug/kg	D U
2,4-Dinitrophenol	5400.000	ug/kg	D UJ	7700.000	ug/kg	D UJ
2,4-Dinitrotoluene	1100.000	ug/kg	D U	1600.000	ug/kg	D U
2,6-Dichlorophenol	1100.000	ug/kg	D UJ	1600.000	ug/kg	D UJ
2,6-Dinitrotoluene	1100.000	ug/kg	D U	1600.000	ug/kg	D U
2-Acetylaminofluorene	1100.000	ug/kg	D U	1600.000	ug/kg	D U
2-Chloronaphthalene	1100.000	ug/kg	D U	1600.000	ug/kg	D U
2-Chlorophenol	1100.000	ug/kg	D U	1600.000	ug/kg	D U
2-Methylnaphthalene	1100.000	ug/kg	D U	1600.000	ug/kg	D U
2-Methylphenol	1100.000	ug/kg	D U	1600.000	ug/kg	D U
2-Naphthylamine	19000.000	ug/kg	D U	28000.000	ug/kg	D U
2-Nitroaniline	5400.000	ug/kg	D U	7700.000	ug/kg	D U
2-Nitrophenol	1100.000	ug/kg	D U	1600.000	ug/kg	D U
2-Picoline	7800.000	ug/kg	D U	11000.000	ug/kg	D U
3,3'-Dichlorobenzidine	2200.000	ug/kg	D UJ	3200.000	ug/kg	D UJ
3,3'-Dimethylbenzidine	9200.000	ug/kg	D U	13000.000	ug/kg	D U
3-Methylcholanthrene	3400.000	ug/kg	D U	4800.000	ug/kg	D U
3-Methylphenol	1100.000	ug/kg	D U	1600.000	ug/kg	D U
3-Nitroaniline	5400.000	ug/kg	D UJ	7700.000	ug/kg	D UJ
4,6-Dinitro-2-methylphenol	5400.000	ug/kg	D U	7700.000	ug/kg	D U
4-Aminobiphenyl	5700.000	ug/kg	D U	8100.000	ug/kg	D U
4-Bromophenyl phenyl ether	1100.000	ug/kg	D U	1600.000	ug/kg	D U
4-Chloro-3-methylphenol	1100.000	ug/kg	D U	1600.000	ug/kg	D U
4-Chlorophenylphenyl ether	1100.000	ug/kg	D U	1600.000	ug/kg	D U

TABLE D-6A
(Continued)

PHASE I - CHEMICAL PARAMETERS

BORING NUMBER	1717				1716			
SAMPLE NUMBER	067902				067904			
	0-2				0-2			
SAMPLING DATE	11/06/91				11/06/91			
CHEMICAL PARAMETERS	RESULTS	UNITS	L	VQ	RESULTS	UNITS	L	VQ
Semivolatile Organics								
4-Methylphenol	1100.000	ug/kg	D	U	1600.000	ug/kg	D	U
4-Nitroaniline	5400.000	ug/kg	D	UJ	7700.000	ug/kg	D	UJ
4-Nitrophenol	5400.000	ug/kg	D	UJ	7700.000	ug/kg	D	UJ
4-Nitroquinoline-1-oxide	1100.000	ug/kg	D	R	1600.000	ug/kg	D	R
5-Nitro-o-toluidine	2300.000	ug/kg	D	U	3200.000	ug/kg	D	U
7,12-Dimethylbenz(a)anthracene	2300.000	ug/kg	D	U	3200.000	ug/kg	D	U
Acenaphthene	1100.000	ug/kg	D	U	1600.000	ug/kg	D	U
Acenaphthylene	1100.000	ug/kg	D	U	1600.000	ug/kg	D	U
Acetophenone	1100.000	ug/kg	D	U	1600.000	ug/kg	D	U
Aniline	5800.000	ug/kg	D	U	8200.000	ug/kg	D	U
Anthracene	1100.000	ug/kg	D	U	1600.000	ug/kg	D	U
Aramite	1100.000	ug/kg	D	UJ	1600.000	ug/kg	D	UJ
Benzo(a)anthracene	1100.000	ug/kg	D	U	1600.000	ug/kg	D	U
Benzo(a)pyrene	1100.000	ug/kg	D	U	1600.000	ug/kg	D	U
Benzo(b)fluoranthene	1100.000	ug/kg	D	U	1600.000	ug/kg	D	U
Benzo(g,h,i)perylene	1100.000	ug/kg	D	U	1600.000	ug/kg	D	U
Benzo(k)fluoranthene	1100.000	ug/kg	D	U	1600.000	ug/kg	D	U
Benzoic acid	5400.000	ug/kg	D	UJ	7700.000	ug/kg	D	UJ
Benzyl alcohol	1100.000	ug/kg	D	UJ	1600.000	ug/kg	D	UJ
Butyl benzyl phthalate	1100.000	ug/kg	D	U	1600.000	ug/kg	D	U
Chrysene	1100.000	ug/kg	D	U	1600.000	ug/kg	D	U
Di-n-butyl phthalate	1100.000	ug/kg	D	U	1600.000	ug/kg	D	U
Di-n-octyl phthalate	1100.000	ug/kg	D	U	1600.000	ug/kg	D	U
Diallate	1100.000	ug/kg	D	UJ	1600.000	ug/kg	D	UJ
Dibenzo(a,h)anthracene	1100.000	ug/kg	D	U	1600.000	ug/kg	D	U
Dibenzofuran	1100.000	ug/kg	D	U	1600.000	ug/kg	D	U
Diethyl phthalate	1100.000	ug/kg	D	U	1600.000	ug/kg	D	U
Dimethyl phthalate	1100.000	ug/kg	D	U	1600.000	ug/kg	D	U
Diphenylamine	1100.000	ug/kg	D	U	1600.000	ug/kg	D	U
Ethyl methanesulfonate	1100.000	ug/kg	D	U	1600.000	ug/kg	D	U
Fluoranthene	1100.000	ug/kg	D	U	1600.000	ug/kg	D	U
Fluorene	1100.000	ug/kg	D	U	1600.000	ug/kg	D	U
Hexachlorobenzene	1100.000	ug/kg	D	U	1600.000	ug/kg	D	U
Hexachlorobutadiene	1100.000	ug/kg	D	U	1600.000	ug/kg	D	U
Hexachlorocyclopentadiene	1100.000	ug/kg	D	UJ	1600.000	ug/kg	D	UJ
Hexachloroethane	1100.000	ug/kg	D	U	1600.000	ug/kg	D	U
Hexachlorophene	5800.000	ug/kg	D	R	8200.000	ug/kg	D	R
Hexachloropropene	2300.000	ug/kg	D	R	3200.000	ug/kg	D	R
Indeno(1,2,3-cd)pyrene	1100.000	ug/kg	D	U	1600.000	ug/kg	D	U
Isophorone	1100.000	ug/kg	D	U	1600.000	ug/kg	D	U
Isosafrole	1100.000	ug/kg	D	U	1600.000	ug/kg	D	U
Methapyrilene	4500.000	ug/kg	D	UJ	6400.000	ug/kg	D	UJ

TABLE D-6A
(Continued)

PHASE I - CHEMICAL PARAMETERS

BORING NUMBER	1717				1716			
SAMPLE NUMBER	067902				067904			
	0-2				0-2			
SAMPLING DATE	11/06/91				11/06/91			
CHEMICAL PARAMETERS	RESULTS	UNITS	L	VQ	RESULTS	UNITS	L	VQ
Semivolatile Organics								
Methyl methanesulfonate	1100.000	ug/kg	D	U	1600.000	ug/kg	D	U
Methyl parathion	100.000	ug/kg	C	U	100.000	ug/kg	D	U
N-Nitroso-di-n-propylamine	1100.000	ug/kg	D	U	1600.000	ug/kg	D	U
N-Nitrosodi-n-butylamine	2300.000	ug/kg	D	U	3200.000	ug/kg	D	U
N-Nitrosodiethylamine	1100.000	ug/kg	D	U	1600.000	ug/kg	D	U
N-Nitrosodimethylamine	1100.000	ug/kg	D	U	1600.000	ug/kg	D	U
N-Nitrosodiphenylamine	1100.000	ug/kg	D	U	1600.000	ug/kg	D	U
N-Nitrosomethylethylamine	1100.000	ug/kg	D	U	1600.000	ug/kg	D	U
N-Nitrosomorpholine	1100.000	ug/kg	D	U	1600.000	ug/kg	D	U
N-Nitrosopiperidine	1100.000	ug/kg	D	U	1600.000	ug/kg	D	U
N-Nitrosopyrrolidine	1100.000	ug/kg	D	UJ	1600.000	ug/kg	D	UJ
Naphthalene	1100.000	ug/kg	D	U	1600.000	ug/kg	D	U
Nitrobenzene	1100.000	ug/kg	D	U	1600.000	ug/kg	D	U
O,O,O-Triethylphosphorothioate	100.000	ug/kg	D	U	100.000	ug/kg	D	U
Parathion	100.000	ug/kg	C	U	100.000	ug/kg	D	U
Pentachlorobenzene	2300.000	ug/kg	D	U	3200.000	ug/kg	D	U
Pentachloroethane	2300.000	ug/kg	D	U	3200.000	ug/kg	D	U
Pentachloronitrobenzene	2300.000	ug/kg	D	U	3200.000	ug/kg	D	U
Pentachlorophenol	5400.000	ug/kg	D	U	7700.000	ug/kg	D	U
Phenacetin	1100.000	ug/kg	D	U	1600.000	ug/kg	D	U
Phenanthrene	1100.000	ug/kg	D	U	1600.000	ug/kg	D	U
Phenol	1100.000	ug/kg	D	U	1600.000	ug/kg	D	U
Pronamide	3400.000	ug/kg	D	U	4800.000	ug/kg	D	U
Pyrene	1100.000	ug/kg	D	U	1600.000	ug/kg	D	U
Safrole	1100.000	ug/kg	D	U	1600.000	ug/kg	D	U
Sulfotep	100.000	ug/kg	C	U	100.000	ug/kg	D	U
Tributyl phosphate	1100.000	ug/kg	C	U	1600.000	ug/kg	D	U
a,a-Dimethylphenethylamine	1100.000	ug/kg	D	R	1600.000	ug/kg	D	R
bis(2-Chloroethoxy)methane	1100.000	ug/kg	D	U	1600.000	ug/kg	D	U
bis(2-Chloroethyl)ether	1100.000	ug/kg	D	U	1600.000	ug/kg	D	U
bis(2-Chloroisopropyl) ether	1100.000	ug/kg	D	U	1600.000	ug/kg	D	U
bis(2-Ethylhexyl) phthalate	1100.000	ug/kg	D	U	1600.000	ug/kg	D	U
o-Toluidine	1100.000	ug/kg	D	U	1600.000	ug/kg	D	U
p-Chloroaniline	1100.000	ug/kg	D	U	1600.000	ug/kg	D	U
p-Dimethylaminoazobenzene	3400.000	ug/kg	D	U	4800.000	ug/kg	D	U
p-Phenylenediamine	5700.000	ug/kg	D	R	8100.000	ug/kg	D	R
Herbicide Organics								
2,4,5-T	66.000	ug/kg	D	U	92.000	ug/kg	D	U
2,4,5-TP (Silvex)	61.000	ug/kg	D	U	85.000	ug/kg	D	U
2,4-D	340.000	ug/kg	D	U	470.000	ug/kg	D	U

TABLE D-6A
(Continued)

PHASE I - CHEMICAL PARAMETERS

BORING NUMBER	1717				1716			
SAMPLE NUMBER	067902				067904			
	0-2				0-2			
SAMPLING DATE	11/06/91				11/06/91			
CHEMICAL PARAMETERS	RESULTS	UNITS	L	VQ	RESULTS	UNITS	L	VQ
Herbicide Organics								
Dinoseb	24.000	ug/kg	D	U	33.000	ug/kg	D	U
Pesticide Organics/PCBs								
4,4'-DDD	28.000	ug/kg	D	U	38.000	ug/kg	D	U
4,4'-DDE	28.000	ug/kg	D	U	38.000	ug/kg	D	U
4,4'-DDT	28.000	ug/kg	D	U	38.000	ug/kg	D	U
Aldrin	14.000	ug/kg	D	U	19.000	ug/kg	D	U
Aroclor-1016	140.000	ug/kg	D	U	190.000	ug/kg	D	U
Aroclor-1221	140.000	ug/kg	D	U	190.000	ug/kg	D	U
Aroclor-1232	140.000	ug/kg	D	U	190.000	ug/kg	D	U
Aroclor-1242	140.000	ug/kg	D	U	190.000	ug/kg	D	U
Aroclor-1248	140.000	ug/kg	D	U	190.000	ug/kg	D	U
Aroclor-1254	280.000	ug/kg	D	U	380.000	ug/kg	D	U
Aroclor-1260	280.000	ug/kg	D	U	380.000	ug/kg	D	U
Chlorobenzilate	28.000	ug/kg	D	U	38.000	ug/kg	D	U
Dieldrin	28.000	ug/kg	D	U	38.000	ug/kg	D	U
Dimethoate	100.000	ug/kg	C	U	100.000	ug/kg	D	U
Disulfoton	100.000	ug/kg	C	U	100.000	ug/kg	D	U
Endosulfan II	28.000	ug/kg	D	U	38.000	ug/kg	D	U
Endosulfan sulfate	28.000	ug/kg	D	U	38.000	ug/kg	D	U
Endosulfan-I	14.000	ug/kg	D	U	19.000	ug/kg	D	U
Endrin	28.000	ug/kg	D	U	38.000	ug/kg	D	U
Endrin ketone	28.000	ug/kg	D	U	38.000	ug/kg	D	U
Famphur	100.000	ug/kg	C	U	100.000	ug/kg	D	U
Heptachlor	14.000	ug/kg	D	U	19.000	ug/kg	D	U
Heptachlor epoxide	14.000	ug/kg	D	U	19.000	ug/kg	D	U
Isodrin	14.000	ug/kg	D	U	19.000	ug/kg	D	U
Kepone	28.000	ug/kg	D	U	38.000	ug/kg	D	U
Methoxychlor	140.000	ug/kg	D	U	190.000	ug/kg	D	U
Phorate	100.000	ug/kg	C	U	100.000	ug/kg	D	U
Tetraethylpyrophosphate	100.000	ug/kg	D	UJ	100.000	ug/kg	D	UJ
Thionazin	100.000	ug/kg	C	U	100.000	ug/kg	D	U
Toxaphene	280.000	ug/kg	D	U	380.000	ug/kg	D	U
alpha-BHC	14.000	ug/kg	D	U	19.000	ug/kg	D	U
alpha-Chlordane	140.000	ug/kg	D	U	190.000	ug/kg	D	U
beta-BHC	14.000	ug/kg	D	U	19.000	ug/kg	D	U
delta-BHC	14.000	ug/kg	D	U	19.000	ug/kg	D	U
gamma-BHC (Lindane)	14.000	ug/kg	D	U	19.000	ug/kg	D	U
gamma-Chlordane	140.000	ug/kg	D	U	190.000	ug/kg	D	U
Dioxin Furan								
1,2,3,4,6,7,8-Heptachlorodibenzo-p-dioxin	0.072	ug/kg	E	U	0.320	ug/kg	E	U

000547

TABLE D-6A
(Continued)

PHASE I - CHEMICAL PARAMETERS

BORING NUMBER	1717				1716			
SAMPLE NUMBER	067902				067904			
	0-2				0-2			
SAMPLING DATE	11/06/91				11/06/91			
CHEMICAL PARAMETERS	RESULTS	UNITS	L	VQ	RESULTS	UNITS	L	VQ
Dioxin Furan								
1,2,3,4,6,7,8-Heptachlorodibenzofuran	0.240	ug/kg	E	U	0.260	ug/kg	E	U
1,2,3,4,7,8,9-Heptachlorodibenzofuran	0.340	ug/kg	E	U	0.370	ug/kg	E	U
1,2,3,4,7,8-Hexachlorodibenzo-p-dioxin	0.050	ug/kg	E	U	0.097	ug/kg	E	U
1,2,3,4,7,8-Hexachlorodibenzofuran	0.048	ug/kg	E	U	0.100	ug/kg	E	U
1,2,3,6,7,8-Hexachlorodibenzo-p-dioxin	0.039	ug/kg	E	U	0.077	ug/kg	E	U
1,2,3,6,7,8-Hexachlorodibenzofuran	0.043	ug/kg	E	U	0.089	ug/kg	E	U
1,2,3,7,8,9-Hexachlorodibenzo-p-dioxin	0.041	ug/kg	E	U	0.081	ug/kg	E	U
1,2,3,7,8,9-Hexachlorodibenzofuran	0.056	ug/kg	E	U	0.120	ug/kg	E	U
1,2,3,7,8-Pentachlorodibenzo-p-dioxin	0.100	ug/kg	E	UJ	0.240	ug/kg	E	UJ
1,2,3,7,8-Pentachlorodibenzofuran	0.085	ug/kg	E	U	0.300	ug/kg	E	U
2,3,4,6,7,8-Hexachlorodibenzofuran	0.050	ug/kg	E	U	0.110	ug/kg	E	U
2,3,4,7,8-Pentachlorodibenzofuran	0.092	ug/kg	E	U	0.330	ug/kg	E	U
2,3,7,8-TCDD	0.100	ug/kg	E	U	0.120	ug/kg	E	U
2,3,7,8-TCDF	0.110	ug/kg	E	U	0.056	ug/kg	E	U
Heptachlorodibenzo-p-dioxin	0.072	ug/kg	E	U	0.320	ug/kg	E	U
Heptachlorodibenzofuran	0.290	ug/kg	E	U	0.310	ug/kg	E	U
Hexachlorodibenzo-p-dioxin	0.043	ug/kg	E	U	0.084	ug/kg	E	U
Hexachlorodibenzofuran	0.049	ug/kg	E	U	0.100	ug/kg	E	U
Octachlorodibenzo-p-dioxin	0.051	ug/kg	E	U	0.310	ug/kg	E	UJ
Octachlorodibenzofuran	0.037	ug/kg	E	U	0.420	ug/kg	E	U
Pentachlorodibenzo-p-dioxin	0.100	ug/kg	E	UJ	0.240	ug/kg	E	UJ
Pentachlorodibenzofuran	0.088	ug/kg	E	U	0.310	ug/kg	E	U
Tetrachlorodibenzo-p-dioxin	0.041	ug/kg	E	U	0.055	ug/kg	E	U
Tetrachlorodibenzofuran	0.048	ug/kg	E	U	0.042	ug/kg	E	U
General Chemistry								
Sulfide	14.470	mg/kg	C	U	15.140	mg/kg	C	U

TABLE D-6A
(Continued)

PHASE II - RADIOLOGICAL PARAMETERS

BORING NUMBER	1956			1956			1957		
SAMPLE NUMBER	114857			114859			114835		
	0 - 4			6 - 7			0.5 - 2		
SAMPLING DATE	06/08/93			06/08/93			06/07/93		
RADIOLOGICAL PARAMETERS	RESULTS	UNITS	VQ	RESULTS	UNITS	VQ	RESULTS	UNITS	VQ
CS-137	0.088	pci/g	J	0.110	pci/g	UJ	0.060	pci/g	J
GROSS ALPHA	10.690	pci/g	J	9.920	pci/g	UJ	11.900	pci/g	J
GROSS BETA	16.690	pci/g	-	20.500	pci/g	-	18.700	pci/g	-
NP-237	0.086	pci/g	N	0.034	pci/g	U	0.130	pci/g	N
PU-238	0.536	pci/g	J	0.107	pci/g	J	0.060	pci/g	J
PU-239/240	0.046	pci/g	J	0.040	pci/g	J	0.035	pci/g	J
RA-226	0.670	pci/g	-	1.250	pci/g	-	0.880	pci/g	-
RA-228	0.780	pci/g	-	0.900	pci/g	-	0.590	pci/g	-
RU-106	0.720	pci/g	UJ	0.720	pci/g	UJ	0.530	pci/g	UJ
SR-90	0.130	pci/g	UJ	0.210	pci/g	UJ	0.150	pci/g	UJ
TC-99	0.890	pci/g	J	0.420	pci/g	UJ	0.390	pci/g	UJ
TH-228	0.310	pci/g	U	0.710	pci/g	J	0.599	pci/g	U
TH-230	1.090	pci/g	J	1.240	pci/g	J	1.370	pci/g	J
TH-232	0.250	pci/g	U	1.000	pci/g	J	0.530	pci/g	J
TH-TOTAL	2.270	ug/g	U	9.080	ug/g	J	4.840	ug/g	J
U-234	3.370	pci/g	J	0.890	pci/g	J	2.440	pci/g	-
U-235/236	0.140	pci/g	J	[illegible].060	pci/g	J	0.130	pci/g	J
U-238	3.170	pci/g	J	6.970	pci/g	J	2.840	pci/g	-
U-TOTAL	16.800	mg/kg	J	[illegible].700	mg/kg	J	9.730	mg/kg	-

000719

TABLE D-6A
(Continued)

PHASE II - RADIOLOGICAL PARAMETERS

BORING NUMBER	1957			1958			1958		
SAMPLE NUMBER	114838			114821			114823		
	4 - 5			0.5 - 2.5			4.5 - 5		
SAMPLING DATE	06/07/93			06/06/93			06/06/93		
RADIOLOGICAL PARAMETERS	RESULTS	UNITS	VQ	RESULTS	UNITS	VQ	RESULTS	UNITS	VQ
CS-137	0.071	pci/g	UJ	0.091	pci/g	UJ	0.092	pci/g	UJ
GROSS ALPHA	12.150	pci/g	J	9.120	pci/g	UJ	9.600	pci/g	UJ
GROSS BETA	27.700	pci/g	-	5.780	pci/g	UJ	27.400	pci/g	-
NP-237	0.077	pci/g	N	0.130	pci/g	R	0.044	pci/g	R
PU-238	0.065	pci/g	J	0.130	pci/g	UJ	0.064	pci/g	UJ
PU-239/240	0.035	pci/g	J	0.120	pci/g	UJ	0.060	pci/g	UJ
RA-226	1.370	pci/g	-	0.408	pci/g	-	1.260	pci/g	-
RA-228	1.440	pci/g	-	0.458	pci/g	UJ	1.180	pci/g	-
RU-106	0.620	pci/g	UJ	0.707	pci/g	UJ	0.774	pci/g	UJ
SR-90	0.160	pci/g	UJ	0.182	pci/g	UJ	0.364	pci/g	J
TC-99	0.400	pci/g	UJ	0.647	pci/g	UJ	0.571	pci/g	UJ
TH-228	1.270	pci/g	J	0.130	pci/g	J	1.070	pci/g	J
TH-230	1.510	pci/g	J	0.294	pci/g	J	1.350	pci/g	J
TH-232	1.120	pci/g	J	0.060	pci/g	J	1.210	pci/g	J
TH-TOTAL	12.300	ug/g	J	0.551	ug/g	J	11.000	ug/g	J
U-234	1.150	pci/g	J	1.910	pci/g	-	1.290	pci/g	-
U-235/236	0.057	pci/g	J	0.144	pci/g	J	0.079	pci/g	J
U-238	1.140	pci/g	J	1.840	pci/g	-	1.370	pci/g	-
U-TOTAL	11.100	mg/kg	J	14.000	mg/kg	-	13.100	mg/kg	-

TABLE D-6A
(Continued)

PHASE II - RADIOLOGICAL PARAMETERS

BORING NUMBER	1959			1959			1959		
SAMPLE NUMBER	114812			114814			114815		
	3 - 5			8 - 8.5			11 - 13.5		
SAMPLING DATE	06/05/93			06/05/93			06/05/93		
RADIOLOGICAL PARAMETERS	RESULTS	UNITS	VQ	RESULTS	UNITS	VQ	RESULTS	UNITS	VQ
CS-137	0.068	pci/g	UJ	0.106	pci/g	UJ	0.074	pci/g	UJ
GROSS ALPHA	8.300	pci/g	UJ	12.900	pci/g	-	8.660	pci/g	UJ
GROSS BETA	5.770	pci/g	UJ	23.700	pci/g	-	25.300	pci/g	-
NP-237	0.183	pci/g	R	0.071	pci/g	N	0.054	pci/g	N
PU-238	0.133	pci/g	J	0.039	pci/g	J	0.016	pci/g	J
PU-239/240	0.133	pci/g	J	0.016	pci/g	J	0.020	pci/g	J
RA-226	0.536	pci/g	-	1.170	pci/g	-	1.220	pci/g	-
RA-228	0.460	pci/g	UJ	1.060	pci/g	-	1.050	pci/g	-
RU-106	0.760	pci/g	UJ	0.901	pci/g	UJ	0.672	pci/g	UJ
SR-90	0.167	pci/g	UJ	0.538	pci/g	J	0.237	pci/g	J
TC-99	0.597	pci/g	UJ	0.575	pci/g	UJ	0.640	pci/g	UJ
TH-228	0.228	pci/g	J	1.020	pci/g	J	0.811	pci/g	J
TH-230	0.405	pci/g	J	1.280	pci/g	J	0.857	pci/g	J
TH-232	0.112	pci/g	J	1.260	pci/g	J	0.629	pci/g	J
TH-TOTAL	1.020	ug/g	J	11.500	ug/g	J	5.740	ug/g	J
U-234	2.550	pci/g	-	1.080	pci/g	-	1.140	pci/g	-
U-235/236	0.199	pci/g	J	0.117	pci/g	J	0.068	pci/g	J
U-238	2.470	pci/g	-	1.150	pci/g	-	1.150	pci/g	-
U-TOTAL	15.000	mg/kg	-	12.300	mg/kg	-	11.300	mg/kg	-

000721

TABLE D-6A
(Continued)

PHASE II - RADIOLOGICAL PARAMETERS

BORING NUMBER	1960			1960			1961		
SAMPLE NUMBER	114734			114737			114743		
	5 - 6			13 - 13.5			12 - 13		
SAMPLING DATE	05/27/93			05/28/93			06/01/93		
RADIOLOGICAL PARAMETERS	RESULTS	UNITS	VQ	RESULTS	UNITS	VQ	RESULTS	UNITS	VQ
CS-137	0.006	pci/g	UJ	0.090	pci/g	UJ	0.090	pci/g	UJ
GROSS ALPHA	8.570	pci/g	UJ	11.900	pci/g	-	9.090	pci/g	UJ
GROSS BETA	7.200	pci/g	J	16.200	pci/g	-	14.600	pci/g	-
NP-237	0.038	pci/g	R	0.050	pci/g	N	0.040	pci/g	R
PU-238	0.104	pci/g	J	0.020	pci/g	J	0.090	pci/g	U
PU-239/240	0.044	pci/g	J	0.030	pci/g	UJ	0.040	pci/g	UJ
RA-226	0.395	pci/g	-	0.880	pci/g	-	1.030	pci/g	-
RA-228	0.362	pci/g	UJ	0.670	pci/g	-	0.960	pci/g	-
RU-106	0.509	pci/g	UJ	0.930	pci/g	UJ	0.990	pci/g	UJ
SR-90	0.176	pci/g	UJ	0.190	pci/g	UJ	0.190	pci/g	UJ
TC-99	0.352	pci/g	UJ	0.570	pci/g	UJ	0.570	pci/g	UJ
TH-228	0.111	pci/g	J	0.540	pci/g	-	0.780	pci/g	-
TH-230	1.880	pci/g	-	4.510	pci/g	-	1.120	pci/g	U
TH-232	0.082	pci/g	J	0.360	pci/g	-	0.860	pci/g	-
TH-TOTAL	0.750	ug/g	J	3.310	ug/g	-	7.840	ug/g	-
U-234	1.470	pci/g	-	0.780	pci/g	-	1.050	pci/g	-
U-235/236	0.039	pci/g	J	0.040	pci/g	UJ	0.080	pci/g	J
U-238	1.590	pci/g	-	0.660	pci/g	-	1.170	pci/g	-
U-TOTAL	3.720	mg/kg	-	12.300	mg/kg	-	14.300	mg/kg	-

TABLE D-6A
(Continued)

PHASE II - RADIOLOGICAL PARAMETERS

BORING NUMBER	1961			1962			1963		
SAMPLE NUMBER	114745			114605			114762		
	2 - 4			4.5 - 7			2 - 4		
SAMPLING DATE	06/01/93			05/20/93			06/03/93		
RADIOLOGICAL PARAMETERS	RESULTS	UNITS	VQ	RESULTS	UNITS	VQ	RESULTS	UNITS	VQ
CS-137	0.100	pci/g	UJ	0.029	pci/g	J	0.080	pci/g	UJ
GROSS ALPHA	9.640	pci/g	UJ	9.730	pci/g	J	8.840	pci/g	UJ
GROSS BETA	7.800	pci/g	-	6.430	pci/g	J	6.340	pci/g	UJ
NP-237	0.150	pci/g	R	0.150	pci/g	R	0.170	pci/g	R
PU-238	0.190	pci/g	UJ	0.144	pci/g	J	0.130	pci/g	UJ
PU-239/240	0.040	pci/g	UJ	0.150	pci/g	UJ	0.090	pci/g	UJ
RA-226	0.570	pci/g	-	0.456	pci/g	-	0.370	pci/g	J
RA-228	0.490	pci/g	UJ	0.500	pci/g	UJ	0.400	pci/g	UJ
RU-106	0.610	pci/g	UJ	0.640	pci/g	UJ	0.630	pci/g	UJ
SR-90	0.160	pci/g	UJ	0.174	pci/g	UJ	0.170	pci/g	UJ
TC-99	0.590	pci/g	UJ	0.050	pci/g	UJ	0.570	pci/g	UJ
TH-228	0.260	pci/g	J	0.113	pci/g	UJ	0.110	pci/g	J
TH-230	2.700	pci/g	J	3.060	pci/g	-	0.480	pci/g	J
TH-232	0.230	pci/g	J	0.146	pci/g	J	0.110	pci/g	J
TH-TOTAL	2.090	ug/g	J	1.340	ug/g	J	1.020	ug/g	J
U-234	1.850	pci/g	-	3.310	pci/g	-	0.900	pci/g	-
U-235/236	0.960	pci/g	-	0.233	pci/g	J	0.080	pci/g	J
U-238	1.860	pci/g	-	3.330	pci/g	J	0.870	pci/g	-
U-TOTAL	13.500	mg/kg	-	6.760	mg/kg	-	10.600	mg/kg	-

000723

TABLE D-6A
(Continued)

PHASE II - RADIOLOGICAL PARAMETERS

BORING NUMBER	1963			1963			LSP-SB-01		
SAMPLE NUMBER	114766			114874			114564		
	13.5 - 15.5			17 - 18			0.5 - 1		
SAMPLING DATE	06/03/93			06/11/93			05/05/93		
RADIOLOGICAL PARAMETERS	RESULTS	UNITS	VQ	RESULTS	UNITS	VQ	RESULTS	UNITS	VQ
CS-137	0.050	pci/g	UJ	0.079	pci/g	UJ	0.100	pci/g	UJ
GROSS ALPHA	9.730	pci/g	UJ	9.080	pci/g	UJ	14.900	pci/g	J
GROSS BETA	13.400	pci/g	-	5.890	pci/g	UJ	25.800	pci/g	J
NP-237	0.050	pci/g	N	0.129	pci/g	N	0.110	pci/g	N
PU-238	0.030	pci/g	UJ	0.040	pci/g	UJ	0.030	pci/g	J
PU-239/240	0.020	pci/g	UJ	0.019	pci/g	UJ	0.030	pci/g	J
RA-226	0.830	pci/g	-	1.040	pci/g	-	1.050	pci/g	-
RA-228	0.730	pci/g	-	0.890	pci/g	-	0.660	pci/g	J
RU-106	0.570	pci/g	UJ	0.604	pci/g	UJ	0.840	pci/g	UJ
SR-90	0.170	pci/g	UJ	0.215	pci/g	UJ	0.400	pci/g	UJ
TC-99	0.540	pci/g	UJ	0.438	pci/g	UJ	0.350	pci/g	UJ
TH-228	0.480	pci/g	J	0.919	pci/g	J	1.070	pci/g	NV
TH-230	0.480	pci/g	J	1.340	pci/g	J	1.830	pci/g	NV
TH-232	0.430	pci/g	J	0.939	pci/g	J	0.880	pci/g	NV
TH-TOTAL	3.950	ug/g	J	8.560	ug/g	J	7.980	ug/g	NV
U-234	0.620	pci/g	-	1.010	pci/g	-	1.600	pci/g	-
U-235/236	0.030	pci/g	J	0.036	pci/g	J	0.080	pci/g	J
U-238	0.590	pci/g	J	1.020	pci/g	-	1.990	pci/g	-
U-TOTAL	8.610	mg/kg	-	4.010	mg/kg	-	6.910	mg/kg	-

TABLE D-6A
(Continued)

PHASE II - RADIOLOGICAL PARAMETERS

BORING NUMBER	LSP-SB-02			LSP-SB-03			LSP-SB-04		
SAMPLE NUMBER	114508			114510			114570		
	0.5 - 1			0.5 - 1			0.5 - 1		
SAMPLING DATE	05/05/93			05/05/93			05/06/93		
RADIOLOGICAL PARAMETERS	RESULTS	UNITS	VQ	RESULTS	UNITS	VQ	RESULTS	UNITS	VQ
CS-137	0.110	pci/g	UJ	0.094	pci/g	J	0.100	pci/g	J
GROSS ALPHA	21.900	pci/g	-	22.700	pci/g	-	27.100	pci/g	J
GROSS BETA	32.300	pci/g	-	29.800	pci/g	-	39.000	pci/g	J
NP-237	0.111	pci/g	N	0.044	pci/g	N	0.480	pci/g	N
PU-238	0.042	pci/g	J	0.018	pci/g	U	0.110	pci/g	J
PU-239/240	0.042	pci/g	J	0.013	pci/g	J	0.090	pci/g	J
RA-226	1.330	pci/g	-	1.060	pci/g	-	1.140	pci/g	-
RA-228	1.240	pci/g	-	1.210	pci/g	-	1.430	pci/g	-
RU-106	0.840	pci/g	UJ	0.760	pci/g	UJ	0.790	pci/g	UJ
SR-90	0.959	pci/g	J	0.841	pci/g	J	0.430	pci/g	UJ
TC-99	0.392	pci/g	UJ	0.355	pci/g	UJ	0.340	pci/g	UJ
TH-228	0.915	pci/g	R	1.060	pci/g	J	1.150	pci/g	J
TH-230	1.550	pci/g	R	1.940	pci/g	J	4.740	pci/g	J
TH-232	0.966	pci/g	R	1.050	pci/g	J	0.880	pci/g	J
TH-TOTAL	8.800	ug/g	R	7.570	ug/g	J	8.100	ug/g	J
U-234	3.710	pci/g	J	4.280	pci/g	J	5.450	pci/g	J
U-235/236	0.203	pci/g	J	0.204	pci/g	J	0.260	pci/g	J
U-238	3.930	pci/g	J	8.750	pci/g	J	6.470	pci/g	J
U-TOTAL	15.100	mg/kg	-	23.500	mg/kg	-	25.200	mg/kg	J

000725

TABLE D-6A
(Continued)

PHASE II - RADIOLOGICAL PARAMETERS

BORING NUMBER	LSP-SB-05			LSP-SB-06			LSP-SB-07		
SAMPLE NUMBER	114600			114602			114576		
	0.5 - 1			0.5 - 1			0.5 - 1		
SAMPLING DATE	05/10/93			05/10/93			05/06/93		
RADIOLOGICAL PARAMETERS	RESULTS	UNITS	VQ	RESULTS	UNITS	VQ	RESULTS	UNITS	VQ
CS-137	0.107	pci/g	UJ	0.085	pci/g	UJ	0.116	pci/g	-
GROSS ALPHA	16.600	pci/g	J	16.400	pci/g	J	32.500	pci/g	J
GROSS BETA	25.500	pci/g	J	20.100	pci/g	J	27.200	pci/g	J
NP-237	0.289	pci/g	J	0.354	pci/g	J	0.541	pci/g	N
PU-238	0.087	pci/g	U	0.087	pci/g	U	0.098	pci/g	J
PU-239/240	0.108	pci/g	U	0.065	pci/g	U	0.089	pci/g	J
RA-226	0.953	pci/g	-	0.970	pci/g	-	1.260	pci/g	-
RA-228	1.080	pci/g	-	1.160	pci/g	-	1.320	pci/g	-
RU-106	0.767	pci/g	UJ	0.861	pci/g	UJ	0.819	pci/g	UJ
SR-90	0.376	pci/g	UJ	0.354	pci/g	UJ	0.381	pci/g	UJ
TC-99	0.344	pci/g	UJ	0.331	pci/g	UJ	0.374	pci/g	UJ
TH-228	0.911	pci/g	-	0.956	pci/g	R	1.270	pci/g	-
TH-230	5.020	pci/g	-	1.530	pci/g	J	5.190	pci/g	-
TH-232	0.947	pci/g	-	0.876	pci/g	R	1.070	pci/g	-
TH-TOTAL	8.710	ug/g	-	8.060	ug/g	R	9.840	ug/g	-
U-234	3.460	pci/g	-	2.670	pci/g	-	4.490	pci/g	-
U-235/236	0.181	pci/g	J	0.143	pci/g	J	0.220	pci/g	J
U-238	3.780	pci/g	-	2.750	pci/g	-	5.090	pci/g	-
U-TOTAL	19.100	mg/kg	-	18.500	mg/kg	-	26.400	mg/kg	-

TABLE D-6A
(Continued)

PHASE II - RADIOLOGICAL PARAMETERS

BORING NUMBER	LSP-SB-196			LSP-SS-03			LSP-SS-04		
SAMPLE NUMBER	114607			114469			114476		
	12.5 - 14						0.5 - 1		
SAMPLING DATE	05/25/93			05/01/93			05/02/93		
RADIOLOGICAL PARAMETERS	RESULTS	UNITS	VQ	RESULTS	UNITS	VQ	RESULTS	UNITS	VQ
CS-137	0.100	pci/g	UJ	0.170	pci/g	J	0.086	pci/g	UJ
GROSS ALPHA	9.740	pci/g	J	23.440	pci/g	J	24.200	pci/g	J
GROSS BETA	15.970	pci/g	J	29.280	pci/g	J	27.100	pci/g	J
NP-237	0.031	pci/g	R	0.080	pci/g	N	0.030	pci/g	N
PU-238	0.043	pci/g	J	0.060	pci/g	J	0.082	pci/g	J
PU-239/240	0.022	pci/g	UJ	0.039	pci/g	J	0.051	pci/g	J
RA-226	0.842	pci/g	-	1.080	pci/g	J	1.060	pci/g	J
RA-228	0.775	pci/g	-	1.330	pci/g	-	1.120	pci/g	-
RU-106	0.786	pci/g	UJ	0.790	pci/g	UJ	0.620	pci/g	UJ
SR-90	0.199	pci/g	UJ	0.397	pci/g	UJ	0.417	pci/g	UJ
TC-99	0.367	pci/g	UJ	0.339	pci/g	UJ	0.352	pci/g	UJ
TH-228	0.536	pci/g	J	1.070	pci/g	-	0.960	pci/g	-
TH-230	2.470	pci/g	-	2.000	pci/g	-	1.800	pci/g	-
TH-232	0.335	pci/g	J	1.030	pci/g	-	0.940	pci/g	-
TH-TOTAL	3.050	ug/g	J	9.400	ug/g	-	8.540	ug/g	-
U-234	0.710	pci/g	-	4.400	pci/g	J	3.830	pci/g	J
U-235/236	0.066	pci/g	J	0.200	pci/g	J	0.220	pci/g	J
U-238	0.732	pci/g	-	4.690	pci/g	J	4.520	pci/g	J
U-TOTAL	2.170	mg/kg	-	24.000	mg/kg	-	20.700	mg/kg	-

000527

TABLE D-6A
(Continued)

PHASE II - RADIOLOGICAL PARAMETERS

BORING NUMBER	LSP-SS-07			LSP-SS-08			LSP-SS-11		
SAMPLE NUMBER	114479			114490			114500		
	0.5 - 1			0.5 - 1			0.5 - 1		
SAMPLING DATE	05/02/93			05/03/93			05/04/93		
RADIOLOGICAL PARAMETERS	RESULTS	UNITS	VQ	RESULTS	UNITS	VQ	RESULTS	UNITS	VQ
CS-137	0.130	pci/g	J	0.087	pci/g	UJ	0.093	pci/g	UJ
GROSS ALPHA	61.400	pci/g	-	23.700	pci/g	J	24.000	pci/g	-
GROSS BETA	43.360	pci/g	-	27.300	pci/g	J	35.000	pci/g	-
NP-237	0.190	pci/g	N	0.040	pci/g	N	0.128	pci/g	N
PU-238	0.067	pci/g	J	0.040	pci/g	J	0.079	pci/g	J
PU-239/240	0.043	pci/g	J	0.011	pci/g	J	0.020	pci/g	J
RA-226	2.360	pci/g	-	1.120	pci/g	J	1.140	pci/g	-
RA-228	1.370	pci/g	-	1.330	pci/g	-	1.080	pci/g	-
RU-106	0.740	pci/g	UJ	0.660	pci/g	UJ	0.800	pci/g	UJ
SR-90	0.860	pci/g	J	0.410	pci/g	J	0.725	pci/g	UJ
TC-99	0.400	pci/g	UJ	0.358	pci/g	UJ	0.399	pci/g	UJ
TH-228	1.090	pci/g	-	0.960	pci/g	-	0.898	pci/g	J
TH-230	32.200	pci/g	-	2.900	pci/g	-	1.150	pci/g	J
TH-232	1.340	pci/g	-	0.940	pci/g	-	0.851	pci/g	J
TH-TOTAL	12.200	ug/g	-	8.550	ug/g	-	7.750	ug/g	J
U-234	4.500	pci/g	-	3.750	pci/g	J	3.660	pci/g	J
U-235/236	0.209	pci/g	J	0.290	pci/g	J	0.204	pci/g	J
U-238	5.610	pci/g	-	4.680	pci/g	J	4.050	pci/g	J
U-TOTAL	17.600	mg/kg	-	22.700	mg/kg	-	11.200	mg/kg	-

TABLE D-6A
(Continued)

PHASE II - RADIOLOGICAL PARAMETERS

BORING NUMBER	LSP-SS-12			K-65 TRENCH			K-65 TRENCH		
SAMPLE NUMBER	114503			114776			114767		
	0.5 - 1			0 - 6			0 - 6		
SAMPLING DATE	05/04/93			06/07/93			05/25/93		
RADIOLOGICAL PARAMETERS	RESULTS	UNITS	VQ	RESULTS	UNITS	VQ	RESULTS	UNITS	VQ
CS-137	0.130	pci/g	J	0.092	pci/g	J	0.113	pci/g	J
GROSS ALPHA	25.900	pci/g	-	36.740	pci/g	J	48.100	pci/g	J
GROSS BETA	33.200	pci/g	-	29.800	pci/g	-	41.200	pci/g	J
NP-237	0.045	pci/g	N	0.305	pci/g	N	0.103	pci/g	N
PU-238	0.016	pci/g	U	0.036	pci/g	J	0.344	pci/g	J
PU-239/240	0.028	pci/g	UJ	0.046	pci/g	J	0.050	pci/g	J
RA-226	1.150	pci/g	-	2.320	pci/g	-	5.930	pci/g	-
RA-228	0.983	pci/g	-	1.720	pci/g	-	1.020	pci/g	-
RU-106	0.590	pci/g	UJ	0.650	pci/g	UJ	0.797	pci/g	UJ
SR-90	0.565	pci/g	UJ	0.160	pci/g	UJ	0.268	pci/g	J
TC-99	0.398	pci/g	UJ	0.450	pci/g	UJ	0.387	pci/g	UJ
TH-228	0.859	pci/g	J	1.750	pci/g	J	1.300	pci/g	-
TH-230	2.020	pci/g	J	20.300	pci/g	J	5.340	pci/g	-
TH-232	0.819	pci/g	J	1.430	pci/g	J	0.912	pci/g	-
TH-TOTAL	7.460	ug/g	J	13.000	ug/g	J	8.310	ug/g	-
U-234	3.580	pci/g	J	5.330	pci/g	J	3.640	pci/g	-
U-235/236	0.197	pci/g	J	0.260	pci/g	J	0.277	pci/g	J
U-238	4.100	pci/g	J	5.500	pci/g	J	3.910	pci/g	-
U-TOTAL	13.700	mg/kg	-	24.800	mg/kg	J	11.500	mg/kg	-

000729

TABLE D-6A
(Continued)

PHASE II - CHEMICAL PARAMETERS

BORING NUMBER	1956				1956				1957			
SAMPLE NUMBER	114857				114859				114835			
	0-4				6-7				0.5-2			
SAMPLING DATE	06/08/93				06/08/93				06/07/93			
CHEMICAL PARAMETERS	RESULTS	UNITS	L	VQ	RESULTS	UNITS	L	VQ	RESULTS	UNITS	L	VQ
Inorganics												
Aluminum	7110.000	mg/kg	C	J	12300.000	mg/kg	C	-	12100.000	mg/kg	C	-
Antimony	25.700	mg/kg	C	UJ	16.000	mg/kg	C	UJ	20.200	mg/kg	C	UJ
Arsenic	11.200	mg/kg	C	J	7.900	mg/kg	C	-	6.000	mg/kg	C	-
Barium	85.600	mg/kg	C	J	135.000	mg/kg	C	-	86.500	mg/kg	C	-
Beryllium	0.720	mg/kg	C	J	0.790	mg/kg	C	-	0.520	mg/kg	C	-
Cadmium	1.400	mg/kg	C	UJ	1.500	mg/kg	C	-	1.100	mg/kg	C	U
Calcium	269000.000	mg/kg	C	J	24100.000	mg/kg	C	-	150000.000	mg/kg	C	J
Chromium	2.200	mg/kg	C	J	12.100	mg/kg	C	-	11.100	mg/kg	C	-
Cobalt	9.800	mg/kg	C	J	20.000	mg/kg	C	-	10.000	mg/kg	C	-
Copper	29.800	mg/kg	C	J	36.600	mg/kg	C	-	25.000	mg/kg	C	-
Cyanide	0.300	mg/kg	C	J	0.140	mg/kg	C	U	0.160	mg/kg	C	U
Iron	10100.000	mg/kg	C	J	28900.000	mg/kg	C	-	15800.000	mg/kg	C	-
Lead	104.000	mg/kg	C	J	14.000	mg/kg	C	-	13.700	mg/kg	C	-
Magnesium	15800.000	mg/kg	C	J	13500.000	mg/kg	C	-	11200.000	mg/kg	C	-
Manganese	556.000	mg/kg	C	J	1360.000	mg/kg	C	-	401.000	mg/kg	C	-
Mercury	0.210	mg/kg	C	J	0.070	mg/kg	C	U	0.440	mg/kg	C	J
Molybdenum	3.200	mg/kg	C	J	1.800	mg/kg	C	U	2.300	mg/kg	C	U
Nickel	16.800	mg/kg	C	J	36.300	mg/kg	C	-	24.700	mg/kg	C	-
Potassium	1310.000	mg/kg	C	UJ	2050.000	mg/kg	C	-	1570.000	mg/kg	C	-
Selenium	0.440	mg/kg	C	UJ	0.270	mg/kg	C	UJ	1.700	mg/kg	C	UJ
Silicon	5680.000	mg/kg	C	J	1800.000	mg/kg	C	J	150.000	mg/kg	C	J
Silver	1.500	mg/kg	C	UJ	0.960	mg/kg	C	U	1.200	mg/kg	C	U
Sodium	671.000	mg/kg	C	J	444.000	mg/kg	C	-	1620.000	mg/kg	C	J
Thallium	0.440	mg/kg	C	UJ	0.270	mg/kg	C	U	0.340	mg/kg	C	U
Vanadium	8.900	mg/kg	C	J	15.700	mg/kg	C	-	18.800	mg/kg	C	-
Zinc	72.600	mg/kg	C	J	79.800	mg/kg	C	J	69.600	mg/kg	C	J
Volatile Organics												
1,1,1-Trichloroethane	23.000	ug/kg	C	U	14.000	ug/kg	C	U	NA			
1,1,2,2-Tetrachloroethane	23.000	ug/kg	C	U	14.000	ug/kg	C	U	NA			
1,1,2-Trichloroethane	23.000	ug/kg	C	U	14.000	ug/kg	C	U	NA			
1,1-Dichloroethane	23.000	ug/kg	C	U	14.000	ug/kg	C	U	NA			
1,1-Dichloroethene	23.000	ug/kg	C	U	14.000	ug/kg	C	U	NA			
1,2-Dichloroethane	23.000	ug/kg	C	U	14.000	ug/kg	C	U	NA			
1,2-Dichloroethene	23.000	ug/kg	C	U	14.000	ug/kg	C	U	NA			
1,2-Dichloropropane	23.000	ug/kg	C	U	14.000	ug/kg	C	U	NA			
2-Butanone	23.000	ug/kg	C	U	14.000	ug/kg	C	U	NA			
2-Hexanone	23.000	ug/kg	C	U	14.000	ug/kg	C	U	NA			
4-Methyl-2-pentanone	23.000	ug/kg	C	U	14.000	ug/kg	C	U	NA			
Acetone	11.000	ug/kg	C	J	21.000	ug/kg	C	-	NA			
Benzene	23.000	ug/kg	C	U	14.000	ug/kg	C	U	NA			

TABLE D-6A
(Continued)

PHASE II - CHEMICAL PARAMETERS

BORING NUMBER	1956			1956			1957		
SAMPLE NUMBER	114857			114859			114835		
	0-4			6-7			0.5-2		
SAMPLING DATE	06/08/93			06/08/93			06/07/93		
CHEMICAL PARAMETERS	RESULTS	UNITS L	VQ	RESULTS	UNITS L	VQ	RESULTS	UNITS L	VQ
Volatile Organics									
Bromodichloromethane	23.000	ug/kg C	U	14.000	ug/kg C	U	NA		
Bromoform	23.000	ug/kg C	U	14.000	ug/kg C	U	NA		
Bromomethane	23.000	ug/kg C	U	14.000	ug/kg C	U	NA		
Carbon Tetrachloride	23.000	ug/kg C	U	14.000	ug/kg C	U	NA		
Carbon disulfide	23.000	ug/kg C	U	14.000	ug/kg C	U	NA		
Chlorobenzene	23.000	ug/kg C	U	14.000	ug/kg C	U	NA		
Chloroethane	23.000	ug/kg C	U	14.000	ug/kg C	U	NA		
Chloroform	23.000	ug/kg C	U	14.000	ug/kg C	U	NA		
Chloromethane	23.000	ug/kg C	UJ	14.000	ug/kg C	UJ	NA		
Dibromochloromethane	23.000	ug/kg C	U	14.000	ug/kg C	U	NA		
Ethylbenzene	23.000	ug/kg C	U	14.000	ug/kg C	U	NA		
Methylene chloride	18.000	ug/kg C	U	16.000	ug/kg C	U	NA		
Styrene	23.000	ug/kg C	U	14.000	ug/kg C	U	NA		
Tetrachloroethene	23.000	ug/kg C	U	14.000	ug/kg C	U	NA		
Toluene	23.000	ug/kg C	U	14.000	ug/kg C	U	NA		
Trichloroethene	23.000	ug/kg C	U	14.000	ug/kg C	U	NA		
Vinyl Acetate	23.000	ug/kg C	U	14.000	ug/kg C	U	NA		
Vinyl chloride	23.000	ug/kg C	U	14.000	ug/kg C	U	NA		
Xylenes, Total	23.000	ug/kg C	U	14.000	ug/kg C	U	NA		
cis-1,3-Dichloropropene	23.000	ug/kg C	U	14.000	ug/kg C	U	NA		
trans-1,3-Dichloropropene	23.000	ug/kg C	U	14.000	ug/kg C	U	NA		
Semivolatile Organics									
1,2,4-Trichlorobenzene	780.000	ug/kg C	U	460.000	ug/kg C	U	550.000	ug/kg C	U
1,2-Dichlorobenzene	780.000	ug/kg C	U	460.000	ug/kg C	U	550.000	ug/kg C	U
1,3-Dichlorobenzene	780.000	ug/kg C	U	460.000	ug/kg C	U	550.000	ug/kg C	U
1,4-Dichlorobenzene	780.000	ug/kg C	U	460.000	ug/kg C	U	550.000	ug/kg C	U
2,4,5-Trichlorophenol	1900.000	ug/kg C	U	1100.000	ug/kg C	U	1300.000	ug/kg C	U
2,4,6-Trichlorophenol	780.000	ug/kg C	U	460.000	ug/kg C	U	550.000	ug/kg C	U
2,4-Dichlorophenol	780.000	ug/kg C	U	460.000	ug/kg C	U	550.000	ug/kg C	U
2,4-Dimethylphenol	780.000	ug/kg C	U	460.000	ug/kg C	U	550.000	ug/kg C	U
2,4-Dinitrophenol	1900.000	ug/kg C	R	1100.000	ug/kg C	R	1300.000	ug/kg C	UJ
2,4-Dinitrotoluene	780.000	ug/kg C	U	460.000	ug/kg C	U	550.000	ug/kg C	U
2,6-Dinitrotoluene	780.000	ug/kg C	U	460.000	ug/kg C	U	550.000	ug/kg C	U
2-Benzyl-4-chlorophenol	780.000	ug/kg C	U	460.000	ug/kg C	U	550.000	ug/kg C	UJ
2-Chloronaphthalene	780.000	ug/kg C	U	460.000	ug/kg C	U	550.000	ug/kg C	U
2-Chlorophenol	780.000	ug/kg C	U	460.000	ug/kg C	U	550.000	ug/kg C	U
2-Methylnaphthalene	780.000	ug/kg C	U	460.000	ug/kg C	U	550.000	ug/kg C	U
2-Methylphenol	780.000	ug/kg C	U	460.000	ug/kg C	U	550.000	ug/kg C	U
2-Nitroaniline	1900.000	ug/kg C	U	1100.000	ug/kg C	U	1300.000	ug/kg C	U
2-Nitrophenol	780.000	ug/kg C	U	460.000	ug/kg C	U	550.000	ug/kg C	U

TABLE D-6A
(Continued)

PHASE II - CHEMICAL PARAMETERS

BORING NUMBER	1956				1956				1957			
SAMPLE NUMBER	114857				114859				114835			
	0-4				6-7				0.5-2			
SAMPLING DATE	06/08/93				06/08/93				06/07/93			
CHEMICAL PARAMETERS	RESULTS	UNITS	L	VQ	RESULTS	UNITS	L	VQ	RESULTS	UNITS	L	VQ
Semivolatile Organics												
3,3'-Dichlorobenzidine	780.000	ug/kg	C	U	460.000	ug/kg	C	U	550.000	ug/kg	C	U
3-Nitroaniline	1900.000	ug/kg	C	U	1100.000	ug/kg	C	U	1300.000	ug/kg	C	U
4,6-Dinitro-2-methylphenol	1900.000	ug/kg	C	UJ	1100.000	ug/kg	C	UJ	1300.000	ug/kg	C	UJ
4-Bromophenyl phenyl ether	780.000	ug/kg	C	U	460.000	ug/kg	C	U	550.000	ug/kg	C	U
4-Chloro-3-methylphenol	780.000	ug/kg	C	U	460.000	ug/kg	C	U	550.000	ug/kg	C	U
4-Chlorophenylphenyl ether	780.000	ug/kg	C	U	460.000	ug/kg	C	U	550.000	ug/kg	C	U
4-Methylphenol	780.000	ug/kg	C	U	460.000	ug/kg	C	U	550.000	ug/kg	C	U
4-Nitroaniline	1900.000	ug/kg	C	U	1100.000	ug/kg	C	U	1300.000	ug/kg	C	U
4-Nitrophenol	1900.000	ug/kg	C	U	1100.000	ug/kg	C	U	1300.000	ug/kg	C	UJ
Acenaphthene	780.000	ug/kg	C	U	460.000	ug/kg	C	U	550.000	ug/kg	C	U
Acenaphthylene	780.000	ug/kg	C	U	460.000	ug/kg	C	U	550.000	ug/kg	C	U
Anthracene	82.000	ug/kg	C	J	460.000	ug/kg	C	U	550.000	ug/kg	C	U
Benzo(a)anthracene	780.000	ug/kg	C	U	460.000	ug/kg	C	U	550.000	ug/kg	C	U
Benzo(a)pyrene	780.000	ug/kg	C	UJ	460.000	ug/kg	C	UJ	550.000	ug/kg	C	U
Benzo(b)fluoranthene	780.000	ug/kg	C	UJ	460.000	ug/kg	C	UJ	550.000	ug/kg	C	U
Benzo(g,h,i)perylene	780.000	ug/kg	C	UJ	460.000	ug/kg	C	UJ	550.000	ug/kg	C	U
Benzo(k)fluoranthene	780.000	ug/kg	C	UJ	460.000	ug/kg	C	UJ	550.000	ug/kg	C	U
Benzoic acid	3800.000	ug/kg	C	UJ	160.000	ug/kg	C	J	2600.000	ug/kg	C	U
Benzyl alcohol	780.000	ug/kg	C	U	460.000	ug/kg	C	U	550.000	ug/kg	C	UJ
Butyl benzyl phthalate	780.000	ug/kg	C	U	460.000	ug/kg	C	U	550.000	ug/kg	C	U
Carbazole	780.000	ug/kg	C	U	460.000	ug/kg	C	U	550.000	ug/kg	C	U
Chrysene	780.000	ug/kg	C	UJ	460.000	ug/kg	C	UJ	550.000	ug/kg	C	U
Di-n-butyl phthalate	780.000	ug/kg	C	U	75.000	ug/kg	C	J	550.000	ug/kg	C	U
Di-n-octyl phthalate	780.000	ug/kg	C	UJ	460.000	ug/kg	C	UJ	550.000	ug/kg	C	U
Dibenzo(a,h)anthracene	780.000	ug/kg	C	UJ	460.000	ug/kg	C	UJ	550.000	ug/kg	C	U
Dibenzofuran	780.000	ug/kg	C	U	460.000	ug/kg	C	U	550.000	ug/kg	C	U
Diethyl phthalate	780.000	ug/kg	C	U	460.000	ug/kg	C	U	550.000	ug/kg	C	U
Dimethyl phthalate	780.000	ug/kg	C	U	460.000	ug/kg	C	U	550.000	ug/kg	C	U
Fluoranthene	780.000	ug/kg	C	U	460.000	ug/kg	C	U	550.000	ug/kg	C	U
Fluorene	780.000	ug/kg	C	U	460.000	ug/kg	C	U	550.000	ug/kg	C	U
Hexachlorobenzene	780.000	ug/kg	C	U	460.000	ug/kg	C	U	550.000	ug/kg	C	U
Hexachlorobutadiene	780.000	ug/kg	C	U	460.000	ug/kg	C	U	550.000	ug/kg	C	U
Hexachlorocyclopentadiene	780.000	ug/kg	C	U	460.000	ug/kg	C	U	550.000	ug/kg	C	U
Hexachloroethane	780.000	ug/kg	C	U	460.000	ug/kg	C	U	550.000	ug/kg	C	U
Indeno(1,2,3-cd)pyrene	780.000	ug/kg	C	UJ	460.000	ug/kg	C	UJ	550.000	ug/kg	C	U
Isophorone	780.000	ug/kg	C	U	460.000	ug/kg	C	U	550.000	ug/kg	C	U
N-Nitroso-di-n-propylamine	780.000	ug/kg	C	U	460.000	ug/kg	C	U	550.000	ug/kg	C	U
N-Nitrosodimethylamine	780.000	ug/kg	C	U	460.000	ug/kg	C	U	550.000	ug/kg	C	U
N-Nitrosodiphenylamine	780.000	ug/kg	C	U	460.000	ug/kg	C	U	550.000	ug/kg	C	U
Naphthalene	780.000	ug/kg	C	U	460.000	ug/kg	C	U	550.000	ug/kg	C	U
Nitrobenzene	780.000	ug/kg	C	U	460.000	ug/kg	C	U	550.000	ug/kg	C	U
Pentachlorophenol	1900.000	ug/kg	C	UJ	1100.000	ug/kg	C	UJ	1300.000	ug/kg	C	UJ

000232

6508

TABLE D-6A
(Continued)

PHASE II - CHEMICAL PARAMETERS

BORING NUMBER	1956			1956			1957		
SAMPLE NUMBER	114857			114859			114835		
	0-4			6-7			0.5-2		
SAMPLING DATE	06/08/93			06/08/93			06/07/93		
CHEMICAL PARAMETERS	RESULTS	UNITS	L VQ	RESULTS	UNITS	L VQ	RESULTS	UNITS	L VQ
Semivolatile Organics									
Phenanthrene	82.000	ug/kg	C J	460.000	ug/kg	C U	550.000	ug/kg	C U
Phenol	780.000	ug/kg	C U	460.000	ug/kg	C U	550.000	ug/kg	C U
Pyrene	780.000	ug/kg	C UJ	460.000	ug/kg	C UJ	550.000	ug/kg	C U
Tributyl phosphate	780.000	ug/kg	C U	460.000	ug/kg	C U	550.000	ug/kg	C U
bis(2-Chloroethoxy)methane	780.000	ug/kg	C U	460.000	ug/kg	C U	550.000	ug/kg	C U
bis(2-Chloroethyl)ether	780.000	ug/kg	C U	460.000	ug/kg	C U	550.000	ug/kg	C U
bis(2-Chloroisopropyl) ether	780.000	ug/kg	C U	460.000	ug/kg	C U	550.000	ug/kg	C U
bis(2-Ethylhexyl) phthalate	440.000	ug/kg	C J	88.000	ug/kg	C J	91.000	ug/kg	C J
p-Chloroaniline	780.000	ug/kg	C U	460.000	ug/kg	C U	550.000	ug/kg	C U
Pesticide Organics/PCBs									
4,4'-DDD	7.800	ug/kg	C U	4.600	ug/kg	C U	5.400	ug/kg	C U
4,4'-DDE	7.800	ug/kg	C U	4.600	ug/kg	C U	5.400	ug/kg	C U
4,4'-DDT	7.800	ug/kg	C U	4.600	ug/kg	C U	5.400	ug/kg	C U
Aldrin	4.000	ug/kg	C U	2.400	ug/kg	C U	2.800	ug/kg	C U
Aroclor-1016	78.000	ug/kg	C U	46.000	ug/kg	C U	54.000	ug/kg	C U
Aroclor-1221	160.000	ug/kg	C U	93.000	ug/kg	C U	110.000	ug/kg	C U
Aroclor-1232	78.000	ug/kg	C U	46.000	ug/kg	C U	54.000	ug/kg	C U
Aroclor-1242	78.000	ug/kg	C U	46.000	ug/kg	C U	54.000	ug/kg	C U
Aroclor-1248	78.000	ug/kg	C U	46.000	ug/kg	C U	54.000	ug/kg	C U
Aroclor-1254	78.000	ug/kg	C U	46.000	ug/kg	C U	54.000	ug/kg	C U
Aroclor-1260	78.000	ug/kg	C U	46.000	ug/kg	C U	54.000	ug/kg	C U
Dieldrin	7.800	ug/kg	C U	4.600	ug/kg	C U	5.400	ug/kg	C U
Endosulfan II	7.800	ug/kg	C U	4.600	ug/kg	C U	5.400	ug/kg	C U
Endosulfan sulfate	7.800	ug/kg	C U	4.600	ug/kg	C U	5.400	ug/kg	C U
Endosulfan-I	4.000	ug/kg	C U	2.400	ug/kg	C U	2.800	ug/kg	C U
Endrin	7.800	ug/kg	C U	4.600	ug/kg	C U	5.400	ug/kg	C U
Endrin aldehyde	7.800	ug/kg	C U	4.600	ug/kg	C U	5.400	ug/kg	C UJ
Endrin ketone	7.800	ug/kg	C U	4.600	ug/kg	C U	5.400	ug/kg	C U
Heptachlor	4.000	ug/kg	C U	2.400	ug/kg	C U	2.800	ug/kg	C U
Heptachlor epoxide	4.000	ug/kg	C U	2.400	ug/kg	C U	2.800	ug/kg	C U
Methoxychlor	40.000	ug/kg	C U	24.000	ug/kg	C U	28.000	ug/kg	C U
Toxaphene	400.000	ug/kg	C U	240.000	ug/kg	C U	280.000	ug/kg	C U
alpha-BHC	4.000	ug/kg	C U	2.400	ug/kg	C U	2.800	ug/kg	C U
alpha-Chlordane	4.000	ug/kg	C U	2.400	ug/kg	C U	2.800	ug/kg	C U
beta-BHC	4.000	ug/kg	C U	2.400	ug/kg	C U	2.800	ug/kg	C U
delta-BHC	4.000	ug/kg	C U	2.400	ug/kg	C U	2.800	ug/kg	C U
gamma-BHC (Lindane)	4.000	ug/kg	C U	2.400	ug/kg	C U	2.800	ug/kg	C U
gamma-Chlordane	4.000	ug/kg	C U	2.400	ug/kg	C U	2.800	ug/kg	C U

000733

TABLE D-6A
(Continued)

PHASE II - CHEMICAL PARAMETERS

BORING NUMBER	1957			1957			1958		
SAMPLE NUMBER	114872			114838			114821		
	0.5-2			4-5			0.5-2.5		
SAMPLING DATE	06/10/93			06/07/93			06/06/93		
CHEMICAL PARAMETERS	RESULTS	UNITS	L VQ	RESULTS	UNITS	L VQ	RESULTS	UNITS	L VQ
Inorganics									
Aluminum	NA			12800.000	mg/kg	C -	5240.000	mg/kg	C -
Antimony	NA			15.800	mg/kg	C UJ	23.200	mg/kg	C -
Arsenic	NA			14.600	mg/kg	C -	8.400	mg/kg	C -
Barium	NA			111.000	mg/kg	C -	84.900	mg/kg	C -
Beryllium	NA			0.850	mg/kg	C -	0.120	mg/kg	C U
Cadmium	NA			0.840	mg/kg	C U	1.600	mg/kg	C U
Calcium	NA			4980.000	mg/kg	C -	353000.000	mg/kg	C -
Chromium	NA			13.000	mg/kg	C -	6.000	mg/kg	C U
Cobalt	NA			16.900	mg/kg	C -	3.700	mg/kg	C -
Copper	NA			25.100	mg/kg	C -	18.100	mg/kg	C U
Cyanide	NA			0.130	mg/kg	C U	0.250	mg/kg	C -
Iron	NA			30200.000	mg/kg	C -	5810.000	mg/kg	C -
Lead	NA			17.300	mg/kg	C -	3.600	mg/kg	C -
Magnesium	NA			4660.000	mg/kg	C -	17200.000	mg/kg	C -
Manganese	NA			605.000	mg/kg	C -	661.000	mg/kg	C -
Mercury	NA			0.070	mg/kg	C U	2.300	mg/kg	C J
Molybdenum	NA			1.800	mg/kg	C U	2.600	mg/kg	C UJ
Nickel	NA			30.000	mg/kg	C -	8.300	mg/kg	C U
Potassium	NA			1020.000	mg/kg	C -	1180.000	mg/kg	C U
Selenium	NA			0.270	mg/kg	C UJ	4.000	mg/kg	C UJ
Silicon	NA			1640.000	mg/kg	C J	7220.000	mg/kg	C J
Silver	NA			0.940	mg/kg	C U	1.400	mg/kg	C U
Sodium	NA			503.000	mg/kg	C -	345.000	mg/kg	C -
Thallium	NA			0.270	mg/kg	C U	0.400	mg/kg	C U
Vanadium	NA			29.600	mg/kg	C -	2.500	mg/kg	C U
Zinc	NA			73.200	mg/kg	C J	NA		
Volatile Organics									
1,1,1-Trichloroethane	20.000	ug/kg	C U	13.000	ug/kg	C U	20.000	ug/kg	C UJ
1,1,2,2-Tetrachloroethane	20.000	ug/kg	C U	13.000	ug/kg	C U	20.000	ug/kg	C UJ
1,1,2-Trichloroethane	20.000	ug/kg	C U	13.000	ug/kg	C U	20.000	ug/kg	C UJ
1,1,2Trichlorotrifluoroethane	20.000	ug/kg	C NV	NA			NA		
1,1-Dichloroethane	20.000	ug/kg	C U	13.000	ug/kg	C U	20.000	ug/kg	C UJ
1,1-Dichloroethene	20.000	ug/kg	C U	13.000	ug/kg	C U	20.000	ug/kg	C UJ
1,2-Dichloroethane	20.000	ug/kg	C UJ	13.000	ug/kg	C U	20.000	ug/kg	C UJ
1,2-Dichloroethene	20.000	ug/kg	C U	13.000	ug/kg	C U	20.000	ug/kg	C UJ
1,2-Dichloropropane	20.000	ug/kg	C U	13.000	ug/kg	C U	20.000	ug/kg	C UJ
1,2-diethylbenzene	41.000	ug/kg	C NV	NA			NA		
2-Butanone	20.000	ug/kg	C U	13.000	ug/kg	C U	20.000	ug/kg	C UJ
2-Hexanone	20.000	ug/kg	C U	13.000	ug/kg	C U	20.000	ug/kg	C UJ
4-Methyl-2-pentanone	20.000	ug/kg	C U	13.000	ug/kg	C U	20.000	ug/kg	C UJ

TABLE D-6A
(Continued)

PHASE II - CHEMICAL PARAMETERS

BORING NUMBER	1957			1957			1958		
SAMPLE NUMBER	114872			114838			114821		
	0.5-2			4-5			0.5-2.5		
SAMPLING DATE	06/10/93			06/07/93			06/06/93		
CHEMICAL PARAMETERS	RESULTS	UNITS	L VQ	RESULTS	UNITS	L VQ	RESULTS	UNITS	L VQ
Volatile Organics									
Acetone	20.000	ug/kg	C U	6.000	ug/kg	C J	20.000	ug/kg	C UJ
Acetonitrile	200.000	ug/kg	C NV	NA			NA		
Acrylonitrile	200.000	ug/kg	C NV	NA			NA		
Benzene	20.000	ug/kg	C U	13.000	ug/kg	C U	20.000	ug/kg	C UJ
Bromodichloromethane	20.000	ug/kg	C U	13.000	ug/kg	C U	20.000	ug/kg	C UJ
Bromoform	20.000	ug/kg	C U	13.000	ug/kg	C U	20.000	ug/kg	C UJ
Bromomethane	20.000	ug/kg	C U	13.000	ug/kg	C U	20.000	ug/kg	C UJ
Carbon Tetrachloride	20.000	ug/kg	C U	13.000	ug/kg	C U	20.000	ug/kg	C UJ
Carbon disulfide	20.000	ug/kg	C U	13.000	ug/kg	C U	20.000	ug/kg	C UJ
Chlorobenzene	20.000	ug/kg	C U	13.000	ug/kg	C U	20.000	ug/kg	C UJ
Chloroethane	20.000	ug/kg	C UJ	13.000	ug/kg	C U	20.000	ug/kg	C UJ
Chloroform	20.000	ug/kg	C U	13.000	ug/kg	C U	20.000	ug/kg	C UJ
Chloromethane	20.000	ug/kg	C R	13.000	ug/kg	C UJ	20.000	ug/kg	C UJ
Dibromochloromethane	20.000	ug/kg	C U	13.000	ug/kg	C U	20.000	ug/kg	C UJ
Ethylbenzene	20.000	ug/kg	C U	13.000	ug/kg	C U	20.000	ug/kg	C UJ
Hexane	20.000	ug/kg	C NV	NA			NA		
Iodomethane	20.000	ug/kg	C NV	NA			NA		
Methylene chloride	20.000	ug/kg	C U	13.000	ug/kg	C U	31.000	ug/kg	C J
Styrene	20.000	ug/kg	C U	13.000	ug/kg	C U	20.000	ug/kg	C UJ
Tetrachloroethene	20.000	ug/kg	C U	13.000	ug/kg	C U	20.000	ug/kg	C UJ
Toluene	20.000	ug/kg	C U	13.000	ug/kg	C U	20.000	ug/kg	C UJ
Trichloroethene	20.000	ug/kg	C U	13.000	ug/kg	C U	20.000	ug/kg	C UJ
Vinyl Acetate	20.000	ug/kg	C U	13.000	ug/kg	C U	20.000	ug/kg	C UJ
Vinyl chloride	20.000	ug/kg	C U	13.000	ug/kg	C U	20.000	ug/kg	C UJ
Xylenes, Total	20.000	ug/kg	C U	13.000	ug/kg	C U	20.000	ug/kg	C UJ
cis-1,3-Dichloropropene	20.000	ug/kg	C U	13.000	ug/kg	C U	20.000	ug/kg	C UJ
trans-1,3-Dichloropropene	20.000	ug/kg	C U	13.000	ug/kg	C U	20.000	ug/kg	C UJ
Semivolatile Organics									
1,2,4-Trichlorobenzene	NA			450.000	ug/kg	C U	680.000	ug/kg	C UJ
1,2-Dichlorobenzene	NA			450.000	ug/kg	C U	680.000	ug/kg	C UJ
1,3-Dichlorobenzene	NA			450.000	ug/kg	C U	680.000	ug/kg	C UJ
1,4-Dichlorobenzene	NA			450.000	ug/kg	C U	680.000	ug/kg	C UJ
2,4,5-Trichlorophenol	NA			1100.000	ug/kg	C U	1600.000	ug/kg	C UJ
2,4,6-Trichlorophenol	NA			450.000	ug/kg	C U	680.000	ug/kg	C UJ
2,4-Dichlorophenol	NA			450.000	ug/kg	C U	680.000	ug/kg	C UJ
2,4-Dimethylphenol	NA			450.000	ug/kg	C U	680.000	ug/kg	C UJ
2,4-Dinitrophenol	NA			1100.000	ug/kg	C UJ	3300.000	ug/kg	C UJ
2,4-Dinitrotoluene	NA			450.000	ug/kg	C U	680.000	ug/kg	C UJ
2,6-Dinitrotoluene	NA			450.000	ug/kg	C U	680.000	ug/kg	C UJ
2-Benzyl-4-chlorophenol	NA			450.000	ug/kg	C U	680.000	ug/kg	C UJ

TABLE D-6A
(Continued)

PHASE II - CHEMICAL PARAMETERS

BORING NUMBER	1957			1957			1958		
SAMPLE NUMBER	114872			114838			114821		
	0.5-2			4-5			0.5-2.5		
SAMPLING DATE	06/10/93			06/07/93			06/06/93		
CHEMICAL PARAMETERS	RESULTS	UNITS	L VQ	RESULTS	UNITS	L VQ	RESULTS	UNITS	L VQ
Semivolatile Organics									
2-Chloronaphthalene	NA			450.000	ug/kg	C U	680.000	ug/kg	C UJ
2-Chlorophenol	NA			450.000	ug/kg	C U	680.000	ug/kg	C UJ
2-Methylnaphthalene	NA			450.000	ug/kg	C U	680.000	ug/kg	C UJ
2-Methylphenol	NA			450.000	ug/kg	C U	680.000	ug/kg	C UJ
2-Nitroaniline	NA			1100.000	ug/kg	C U	1600.000	ug/kg	C UJ
2-Nitrophenol	NA			450.000	ug/kg	C U	680.000	ug/kg	C UJ
3,3'-Dichlorobenzidine	NA			450.000	ug/kg	C U	680.000	ug/kg	C UJ
3-Nitroaniline	NA			1100.000	ug/kg	C U	1600.000	ug/kg	C UJ
4,6-Dinitro-2-methylphenol	NA			1100.000	ug/kg	C UJ	1600.000	ug/kg	C UJ
4-Bromophenyl phenyl ether	NA			450.000	ug/kg	C U	680.000	ug/kg	C UJ
4-Chloro-3-methylphenol	NA			450.000	ug/kg	C U	680.000	ug/kg	C UJ
4-Chlorophenylphenyl ether	NA			450.000	ug/kg	C U	680.000	ug/kg	C UJ
4-Methylphenol	NA			450.000	ug/kg	C U	680.000	ug/kg	C UJ
4-Nitroaniline	NA			1100.000	ug/kg	C U	1600.000	ug/kg	C UJ
4-Nitrophenol	NA			1100.000	ug/kg	C U	1600.000	ug/kg	C UJ
Acenaphthene	NA			450.000	ug/kg	C U	680.000	ug/kg	C UJ
Acenaphthylene	NA			450.000	ug/kg	C U	680.000	ug/kg	C UJ
Anthracene	NA			450.000	ug/kg	C U	680.000	ug/kg	C UJ
Benzo(a)anthracene	NA			450.000	ug/kg	C U	680.000	ug/kg	C UJ
Benzo(a)pyrene	NA			450.000	ug/kg	C U	680.000	ug/kg	C UJ
Benzo(b)fluoranthene	NA			450.000	ug/kg	C U	680.000	ug/kg	C UJ
Benzo(g,h,i)perylene	NA			450.000	ug/kg	C U	680.000	ug/kg	C UJ
Benzo(k)fluoranthene	NA			450.000	ug/kg	C U	680.000	ug/kg	C UJ
Benzoic acid	NA			2200.000	ug/kg	C R	3300.000	ug/kg	C UJ
Benzyl alcohol	NA			450.000	ug/kg	C UJ	680.000	ug/kg	C UJ
Butyl benzyl phthalate	NA			450.000	ug/kg	C U	680.000	ug/kg	C UJ
Carbazole	NA			450.000	ug/kg	C U	680.000	ug/kg	C UJ
Chrysene	NA			450.000	ug/kg	C U	680.000	ug/kg	C UJ
Di-n-butyl phthalate	NA			59.000	ug/kg	C J	680.000	ug/kg	C UJ
Di-n-octyl phthalate	NA			450.000	ug/kg	C U	680.000	ug/kg	C UJ
Dibenzo(a,h)anthracene	NA			450.000	ug/kg	C U	680.000	ug/kg	C UJ
Dibenzofuran	NA			450.000	ug/kg	C U	680.000	ug/kg	C UJ
Diethyl phthalate	NA			450.000	ug/kg	C U	680.000	ug/kg	C UJ
Dimethyl phthalate	NA			450.000	ug/kg	C U	680.000	ug/kg	C UJ
Fluoranthene	NA			450.000	ug/kg	C U	680.000	ug/kg	C UJ
Fluorene	NA			450.000	ug/kg	C U	680.000	ug/kg	C UJ
Hexachlorobenzene	NA			450.000	ug/kg	C U	680.000	ug/kg	C UJ
Hexachlorobutadiene	NA			450.000	ug/kg	C U	680.000	ug/kg	C UJ
Hexachlorocyclopentadiene	NA			450.000	ug/kg	C U	680.000	ug/kg	C UJ
Hexachloroethane	NA			450.000	ug/kg	C U	680.000	ug/kg	C UJ
Indeno(1,2,3-cd)pyrene	NA			450.000	ug/kg	C U	680.000	ug/kg	C UJ
Isophorone	NA			450.000	ug/kg	C U	680.000	ug/kg	C UJ

TABLE D-6A
(Continued)

PHASE II - CHEMICAL PARAMETERS

BORING NUMBER	1957			1957			1958		
SAMPLE NUMBER	114872			114838			114821		
	0.5-2			4-5			0.5-2.5		
SAMPLING DATE	06/10/93			06/07/93			06/06/93		
CHEMICAL PARAMETERS	RESULTS	UNITS	L VQ	RESULTS	UNITS	L VQ	RESULTS	UNITS	L VQ
Semivolatile Organics									
N-Nitroso-di-n-propylamine	NA			450.000	ug/kg	C U	680.000	ug/kg	C UJ
N-Nitrosodimethylamine	NA			450.000	ug/kg	C U	680.000	ug/kg	C UJ
N-Nitrosodiphenylamine	NA			450.000	ug/kg	C U	680.000	ug/kg	C UJ
Naphthalene	NA			450.000	ug/kg	C U	680.000	ug/kg	C UJ
Nitrobenzene	NA			450.000	ug/kg	C U	680.000	ug/kg	C UJ
Pentachlorophenol	NA			1100.000	ug/kg	C U	1600.000	ug/kg	C UJ
Phenanthrene	NA			450.000	ug/kg	C U	680.000	ug/kg	C UJ
Phenol	NA			450.000	ug/kg	C U	680.000	ug/kg	C UJ
Pyrene	NA			450.000	ug/kg	C U	680.000	ug/kg	C UJ
Tributyl phosphate	NA			450.000	ug/kg	C U	680.000	ug/kg	C UJ
bis(2-Chloroethoxy)methane	NA			450.000	ug/kg	C U	680.000	ug/kg	C UJ
bis(2-Chloroethyl)ether	NA			450.000	ug/kg	C U	680.000	ug/kg	C UJ
bis(2-Chloroisopropyl) ether	NA			450.000	ug/kg	C U	680.000	ug/kg	C UJ
bis(2-Ethylhexyl) phthalate	NA			410.000	ug/kg	C J	92.000	ug/kg	C J
p-Chloroaniline	NA			450.000	ug/kg	C U	680.000	ug/kg	C UJ
Pesticide Organics/PCBs									
4,4'-DDD	NA			4.400	ug/kg	C U	6.800	ug/kg	C UJ
4,4'-DDE	NA			4.400	ug/kg	C U	6.800	ug/kg	C UJ
4,4'-DDT	NA			4.400	ug/kg	C U	6.800	ug/kg	C UJ
Aldrin	NA			2.300	ug/kg	C U	3.500	ug/kg	C UJ
Aroclor-1016	NA			44.000	ug/kg	C U	68.000	ug/kg	C UJ
Aroclor-1221	NA			90.000	ug/kg	C U	140.000	ug/kg	C UJ
Aroclor-1232	NA			44.000	ug/kg	C U	68.000	ug/kg	C UJ
Aroclor-1242	NA			44.000	ug/kg	C U	68.000	ug/kg	C UJ
Aroclor-1248	NA			44.000	ug/kg	C U	68.000	ug/kg	C UJ
Aroclor-1254	NA			44.000	ug/kg	C U	68.000	ug/kg	C UJ
Aroclor-1260	NA			44.000	ug/kg	C U	68.000	ug/kg	C UJ
Dieldrin	NA			4.400	ug/kg	C U	6.800	ug/kg	C UJ
Endosulfan II	NA			4.400	ug/kg	C U	6.800	ug/kg	C UJ
Endosulfan sulfate	NA			4.400	ug/kg	C U	6.800	ug/kg	C UJ
Endosulfan-I	NA			2.300	ug/kg	C U	3.500	ug/kg	C UJ
Endrin	NA			4.400	ug/kg	C U	6.800	ug/kg	C UJ
Endrin aldehyde	NA			4.400	ug/kg	C U	6.800	ug/kg	C UJ
Endrin ketone	NA			4.400	ug/kg	C U	6.800	ug/kg	C UJ
Heptachlor	NA			2.300	ug/kg	C U	3.500	ug/kg	C UJ
Heptachlor epoxide	NA			2.300	ug/kg	C U	3.500	ug/kg	C UJ
Methoxychlor	NA			23.000	ug/kg	C U	35.000	ug/kg	C UJ
Toxaphene	NA			230.000	ug/kg	C U	350.000	ug/kg	C UJ
alpha-BHC	NA			2.300	ug/kg	C U	3.500	ug/kg	C UJ
alpha-Chlordane	NA			2.300	ug/kg	C U	3.500	ug/kg	C UJ

000737

TABLE D-6A
(Continued)

PHASE II - CHEMICAL PARAMETERS

BORING NUMBER	1957			1957			1958		
SAMPLE NUMBER	114872			114838			114821		
	0.5-2			4-5			0.5-2.5		
SAMPLING DATE	06/10/93			06/07/93			06/06/93		
CHEMICAL PARAMETERS	RESULTS	UNITS	L VQ	RESULTS	UNITS	L VQ	RESULTS	UNITS	L VQ
Pesticide Organics/PCBs									
beta-BHC	NA			2.300	ug/kg	C U	3.500	ug/kg	C UJ
delta-BHC	NA			2.300	ug/kg	C U	3.500	ug/kg	C UJ
gamma-BHC (Lindane)	NA			2.300	ug/kg	C U	3.500	ug/kg	C UJ
gamma-Chlordane	NA			2.300	ug/kg	C U	3.500	ug/kg	C UJ

000238

6508

TABLE D-6A
(Continued)

PHASE II - CHEMICAL PARAMETERS

BORING NUMBER	1958			1959			1959		
SAMPLE NUMBER	114823			114812			114814		
	4.5-5			3-5			8-8.5		
SAMPLING DATE	06/06/93			06/05/93			06/05/93		
CHEMICAL PARAMETERS	RESULTS	UNITS	L VQ	RESULTS	UNITS	L VQ	RESULTS	UNITS	L VQ
Inorganics									
Aluminum	17700.000	mg/kg	C -	19700.000	mg/kg	C J	2990.000	mg/kg	C -
Antimony	15.500	mg/kg	C UJ	29.200	mg/kg	C J	15.200	mg/kg	C UJ
Arsenic	13.800	mg/kg	C -	6.100	mg/kg	C J	8.700	mg/kg	C -
Barium	130.000	mg/kg	C -	144.000	mg/kg	C J	43.400	mg/kg	C -
Beryllium	1.000	mg/kg	C U	1.500	mg/kg	C J	0.210	mg/kg	C U
Cadmium	1.300	mg/kg	C U	1.400	mg/kg	C UJ	1.500	mg/kg	C U
Calcium	8100.000	mg/kg	C -	136000.000	mg/kg	C J	180000.000	mg/kg	C -
Chromium	20.000	mg/kg	C -	21.100	mg/kg	C J	2.300	mg/kg	C U
Cobalt	17.600	mg/kg	C -	30.200	mg/kg	C J	3.400	mg/kg	C -
Copper	28.300	mg/kg	C -	44.600	mg/kg	C J	16.500	mg/kg	C U
Cyanide	0.130	mg/kg	C U	NA			0.120	mg/kg	C U
Iron	36400.000	mg/kg	C -	48100.000	mg/kg	C J	3920.000	mg/kg	C -
Lead	17.600	mg/kg	C -	6.400	mg/kg	C J	15.100	mg/kg	C -
Magnesium	6850.000	mg/kg	C -	40300.000	mg/kg	C J	10300.000	mg/kg	C -
Manganese	524.000	mg/kg	C -	1020.000	mg/kg	C J	370.000	mg/kg	C -
Mercury	0.070	mg/kg	C UJ	0.110	mg/kg	C UJ	0.060	mg/kg	C UJ
Molybdenum	1.800	mg/kg	C U	5.100	mg/kg	C UJ	1.700	mg/kg	C U
Nickel	32.900	mg/kg	C -	46.700	mg/kg	C J	5.400	mg/kg	C U
Potassium	1850.000	mg/kg	C -	3010.000	mg/kg	C J	773.000	mg/kg	C U
Selenium	0.260	mg/kg	C UJ	2.300	mg/kg	C UJ	0.260	mg/kg	C UJ
Silicon	2500.000	mg/kg	C J	3810.000	mg/kg	C J	4230.000	mg/kg	C J
Silver	0.920	mg/kg	C U	1.600	mg/kg	C UJ	0.910	mg/kg	C U
Sodium	373.000	mg/kg	C -	308.000	mg/kg	C J	306.000	mg/kg	C -
Thallium	0.260	mg/kg	C U	0.460	mg/kg	C UJ	0.260	mg/kg	C U
Vanadium	40.300	mg/kg	C -	42.200	mg/kg	C J	1.200	mg/kg	C U
Zinc	84.100	mg/kg	C J	122.000	mg/kg	C J	28.500	mg/kg	C J
Volatile Organics									
1,1,1-Trichloroethane	13.000	ug/kg	C U	23.000	ug/kg	C UJ	12.000	ug/kg	C U
1,1,2,2-Tetrachloroethane	13.000	ug/kg	C U	23.000	ug/kg	C UJ	12.000	ug/kg	C U
1,1,2-Trichloroethane	13.000	ug/kg	C U	23.000	ug/kg	C UJ	12.000	ug/kg	C U
1,1-Dichloroethane	13.000	ug/kg	C U	5.000	ug/kg	C J	12.000	ug/kg	C U
1,1-Dichloroethene	13.000	ug/kg	C U	23.000	ug/kg	C UJ	12.000	ug/kg	C U
1,2-Dichloroethane	13.000	ug/kg	C U	23.000	ug/kg	C UJ	12.000	ug/kg	C UJ
1,2-Dichloroethene	13.000	ug/kg	C U	23.000	ug/kg	C UJ	12.000	ug/kg	C U
1,2-Dichloropropane	13.000	ug/kg	C U	23.000	ug/kg	C UJ	12.000	ug/kg	C U
2-Butanone	13.000	ug/kg	C U	5.000	ug/kg	C J	1.000	ug/kg	C J
2-Hexanone	13.000	ug/kg	C U	23.000	ug/kg	C UJ	12.000	ug/kg	C U
4-Methyl-2-pentanone	13.000	ug/kg	C U	23.000	ug/kg	C UJ	12.000	ug/kg	C U
Acetone	13.000	ug/kg	C U	34.000	ug/kg	C J	7.000	ug/kg	C J
Benzene	13.000	ug/kg	C U	23.000	ug/kg	C UJ	12.000	ug/kg	C U

000739

TABLE D-6A
(Continued)

PHASE II - CHEMICAL PARAMETERS

BORING NUMBER	1958			1959			1959		
SAMPLE NUMBER	114823			114812			114814		
	4.5-5			3-5			8-8.5		
SAMPLING DATE	06/06/93			06/05/93			06/05/93		
CHEMICAL PARAMETERS	RESULTS	UNITS L	VQ	RESULTS	UNITS L	VQ	RESULTS	UNITS L	VQ
Volatile Organics									
Bromodichloromethane	13.000	ug/kg C	U	23.000	ug/kg C	UJ	12.000	ug/kg C	U
Bromoform	13.000	ug/kg C	U	23.000	ug/kg C	UJ	12.000	ug/kg C	U
Bromomethane	13.000	ug/kg C	U	23.000	ug/kg C	UJ	12.000	ug/kg C	U
Carbon Tetrachloride	13.000	ug/kg C	U	23.000	ug/kg C	UJ	12.000	ug/kg C	U
Carbon disulfide	13.000	ug/kg C	U	23.000	ug/kg C	UJ	12.000	ug/kg C	U
Chlorobenzene	13.000	ug/kg C	U	23.000	ug/kg C	UJ	12.000	ug/kg C	U
Chloroethane	13.000	ug/kg C	U	23.000	ug/kg C	UJ	12.000	ug/kg C	U
Chloroform	13.000	ug/kg C	U	23.000	ug/kg C	UJ	12.000	ug/kg C	U
Chloromethane	13.000	ug/kg C	UJ	23.000	ug/kg C	UJ	12.000	ug/kg C	U
Dibromochloromethane	13.000	ug/kg C	U	23.000	ug/kg C	UJ	12.000	ug/kg C	U
Ethylbenzene	13.000	ug/kg C	U	23.000	ug/kg C	UJ	12.000	ug/kg C	U
Methylene chloride	13.000	ug/kg C	U	28.000	ug/kg C	UJ	16.000	ug/kg C	U
Styrene	13.000	ug/kg C	U	23.000	ug/kg C	UJ	12.000	ug/kg C	U
Tetrachloroethene	13.000	ug/kg C	U	23.000	ug/kg C	UJ	12.000	ug/kg C	U
Toluene	13.000	ug/kg C	U	23.000	ug/kg C	UJ	12.000	ug/kg C	U
Trichloroethene	13.000	ug/kg C	U	23.000	ug/kg C	UJ	12.000	ug/kg C	U
Vinyl Acetate	13.000	ug/kg C	U	23.000	ug/kg C	UJ	12.000	ug/kg C	U
Vinyl chloride	13.000	ug/kg C	U	23.000	ug/kg C	UJ	12.000	ug/kg C	U
Xylenes, Total	13.000	ug/kg C	U	23.000	ug/kg C	UJ	12.000	ug/kg C	U
cis-1,3-Dichloropropene	13.000	ug/kg C	U	23.000	ug/kg C	UJ	12.000	ug/kg C	U
trans-1,3-Dichloropropene	13.000	ug/kg C	U	23.000	ug/kg C	UJ	12.000	ug/kg C	U
Semivolatile Organics									
1,2,4-Trichlorobenzene	420.000	ug/kg C	U	760.000	ug/kg C	UJ	420.000	ug/kg C	U
1,2-Dichlorobenzene	420.000	ug/kg C	U	760.000	ug/kg C	UJ	420.000	ug/kg C	U
1,3-Dichlorobenzene	420.000	ug/kg C	U	760.000	ug/kg C	UJ	420.000	ug/kg C	U
1,4-Dichlorobenzene	420.000	ug/kg C	U	760.000	ug/kg C	UJ	420.000	ug/kg C	U
2,4,5-Trichlorophenol	1000.000	ug/kg C	U	1800.000	ug/kg C	UJ	1000.000	ug/kg C	U
2,4,6-Trichlorophenol	420.000	ug/kg C	U	760.000	ug/kg C	UJ	420.000	ug/kg C	U
2,4-Dichlorophenol	420.000	ug/kg C	U	760.000	ug/kg C	UJ	420.000	ug/kg C	UJ
2,4-Dimethylphenol	420.000	ug/kg C	U	760.000	ug/kg C	UJ	420.000	ug/kg C	U
2,4-Dinitrophenol	2000.000	ug/kg C	UJ	3700.000	ug/kg C	UJ	2000.000	ug/kg C	UJ
2,4-Dinitrotoluene	420.000	ug/kg C	U	760.000	ug/kg C	UJ	420.000	ug/kg C	U
2,6-Dinitrotoluene	420.000	ug/kg C	U	760.000	ug/kg C	UJ	420.000	ug/kg C	U
2-Benzyl-4-chlorophenol	420.000	ug/kg C	UJ	760.000	ug/kg C	UJ	420.000	ug/kg C	UJ
2-Chloronaphthalene	420.000	ug/kg C	U	760.000	ug/kg C	UJ	420.000	ug/kg C	U
2-Chlorophenol	420.000	ug/kg C	U	760.000	ug/kg C	UJ	420.000	ug/kg C	U
2-Methylnaphthalene	420.000	ug/kg C	U	760.000	ug/kg C	UJ	420.000	ug/kg C	U
2-Methylphenol	420.000	ug/kg C	U	760.000	ug/kg C	UJ	420.000	ug/kg C	U
2-Nitroaniline	1000.000	ug/kg C	U	1800.000	ug/kg C	UJ	1000.000	ug/kg C	U
2-Nitrophenol	420.000	ug/kg C	U	760.000	ug/kg C	UJ	420.000	ug/kg C	U

TABLE D-6A
(Continued)

PHASE II - CHEMICAL PARAMETERS

BORING NUMBER	1958			1959			1959		
SAMPLE NUMBER	114823			114812			114814		
	4.5-5			3-5			8-8.5		
SAMPLING DATE	06/06/93			06/05/93			06/05/93		
CHEMICAL PARAMETERS	RESULTS	UNITS L	VQ	RESULTS	UNITS L	VQ	RESULTS	UNITS L	VQ
Semivolatile Organics									
3,3'-Dichlorobenzidine	420.000	ug/kg C	U	760.000	ug/kg C	UJ	420.000	ug/kg C	U
3-Nitroaniline	1000.000	ug/kg C	U	1800.000	ug/kg C	UJ	1000.000	ug/kg C	U
4,6-Dinitro-2-methylphenol	1000.000	ug/kg C	UJ	1800.000	ug/kg C	UJ	1000.000	ug/kg C	UJ
4-Bromophenyl phenyl ether	420.000	ug/kg C	U	760.000	ug/kg C	UJ	420.000	ug/kg C	U
4-Chloro-3-methylphenol	420.000	ug/kg C	U	760.000	ug/kg C	UJ	420.000	ug/kg C	U
4-Chlorophenylphenyl ether	420.000	ug/kg C	U	760.000	ug/kg C	UJ	420.000	ug/kg C	U
4-Methylphenol	420.000	ug/kg C	U	760.000	ug/kg C	UJ	420.000	ug/kg C	U
4-Nitroaniline	1000.000	ug/kg C	U	1800.000	ug/kg C	UJ	1000.000	ug/kg C	U
4-Nitrophenol	1000.000	ug/kg C	UJ	1800.000	ug/kg C	UJ	1000.000	ug/kg C	UJ
Acenaphthene	420.000	ug/kg C	U	760.000	ug/kg C	UJ	420.000	ug/kg C	U
Acenaphthylene	420.000	ug/kg C	U	760.000	ug/kg C	UJ	420.000	ug/kg C	U
Anthracene	420.000	ug/kg C	U	760.000	ug/kg C	UJ	420.000	ug/kg C	U
Benzo(a)anthracene	420.000	ug/kg C	U	760.000	ug/kg C	UJ	420.000	ug/kg C	U
Benzo(a)pyrene	420.000	ug/kg C	U	760.000	ug/kg C	UJ	420.000	ug/kg C	U
Benzo(b)fluoranthene	420.000	ug/kg C	U	760.000	ug/kg C	UJ	420.000	ug/kg C	U
Benzo(g,h,i)perylene	420.000	ug/kg C	U	760.000	ug/kg C	UJ	420.000	ug/kg C	U
Benzo(k)fluoranthene	420.000	ug/kg C	U	760.000	ug/kg C	UJ	420.000	ug/kg C	U
Benzoic acid	2000.000	ug/kg C	UJ	3700.000	ug/kg C	UJ	2000.000	ug/kg C	UJ
Benzyl alcohol	420.000	ug/kg C	UJ	760.000	ug/kg C	UJ	420.000	ug/kg C	UJ
Butyl benzyl phthalate	420.000	ug/kg C	U	760.000	ug/kg C	UJ	420.000	ug/kg C	U
Carbazole	420.000	ug/kg C	U	760.000	ug/kg C	UJ	420.000	ug/kg C	U
Chrysene	420.000	ug/kg C	U	760.000	ug/kg C	UJ	420.000	ug/kg C	U
Di-n-butyl phthalate	420.000	ug/kg C	U	140.000	ug/kg C	J	48.000	ug/kg C	J
Di-n-octyl phthalate	420.000	ug/kg C	U	760.000	ug/kg C	UJ	420.000	ug/kg C	U
Dibenzo(a,h)anthracene	420.000	ug/kg C	U	760.000	ug/kg C	UJ	420.000	ug/kg C	U
Dibenzofuran	420.000	ug/kg C	U	760.000	ug/kg C	UJ	420.000	ug/kg C	U
Diethyl phthalate	420.000	ug/kg C	U	760.000	ug/kg C	UJ	420.000	ug/kg C	U
Dimethyl phthalate	420.000	ug/kg C	U	760.000	ug/kg C	UJ	420.000	ug/kg C	U
Fluoranthene	420.000	ug/kg C	U	760.000	ug/kg C	UJ	420.000	ug/kg C	U
Fluorene	420.000	ug/kg C	U	760.000	ug/kg C	UJ	420.000	ug/kg C	U
Hexachlorobenzene	420.000	ug/kg C	U	760.000	ug/kg C	UJ	420.000	ug/kg C	U
Hexachlorobutadiene	420.000	ug/kg C	U	760.000	ug/kg C	UJ	420.000	ug/kg C	U
Hexachlorocyclopentadiene	420.000	ug/kg C	U	760.000	ug/kg C	UJ	420.000	ug/kg C	U
Hexachloroethane	420.000	ug/kg C	U	760.000	ug/kg C	UJ	420.000	ug/kg C	U
Indeno(1,2,3-cd)pyrene	420.000	ug/kg C	U	760.000	ug/kg C	UJ	420.000	ug/kg C	U
Isophorone	420.000	ug/kg C	U	760.000	ug/kg C	UJ	420.000	ug/kg C	U
N-Nitroso-di-n-propylamine	420.000	ug/kg C	U	760.000	ug/kg C	UJ	420.000	ug/kg C	U
N-Nitrosodimethylamine	420.000	ug/kg C	U	760.000	ug/kg C	UJ	420.000	ug/kg C	U
N-Nitrosodiphenylamine	420.000	ug/kg C	U	760.000	ug/kg C	UJ	420.000	ug/kg C	U
Naphthalene	420.000	ug/kg C	U	760.000	ug/kg C	UJ	420.000	ug/kg C	U
Nitrobenzene	420.000	ug/kg C	U	760.000	ug/kg C	UJ	420.000	ug/kg C	U
Pentachlorophenol	1000.000	ug/kg C	UJ	1800.000	ug/kg C	UJ	1000.000	ug/kg C	UJ

000721

TABLE D-6A
(Continued)

PHASE II - CHEMICAL PARAMETERS

BORING NUMBER	1958				1959				1959			
SAMPLE NUMBER	114823				114812				114814			
	4.5-5				3-5				8-8.5			
SAMPLING DATE	06/06/93				06/05/93				06/05/93			
CHEMICAL PARAMETERS	RESULTS	UNITS	L	VQ	RESULTS	UNITS	L	VQ	RESULTS	UNITS	L	VQ
Semivolatile Organics												
Phenanthrene	420.000	ug/kg	C	U	760.000	ug/kg	C	UJ	420.000	ug/kg	C	U
Phenol	420.000	ug/kg	C	U	760.000	ug/kg	C	UJ	420.000	ug/kg	C	U
Pyrene	420.000	ug/kg	C	U	760.000	ug/kg	C	UJ	420.000	ug/kg	C	U
Tributyl phosphate	420.000	ug/kg	C	U	760.000	ug/kg	C	UJ	420.000	ug/kg	C	U
bis(2-Chloroethoxy)methane	420.000	ug/kg	C	U	760.000	ug/kg	C	UJ	420.000	ug/kg	C	U
bis(2-Chloroethyl)ether	420.000	ug/kg	C	U	760.000	ug/kg	C	UJ	420.000	ug/kg	C	U
bis(2-Chloroisopropyl) ether	420.000	ug/kg	C	U	760.000	ug/kg	C	UJ	420.000	ug/kg	C	U
bis(2-Ethylhexyl) phthalate	420.000	ug/kg	C	U	260.000	ug/kg	C	J	420.000	ug/kg	C	U
p-Chloroaniline	420.000	ug/kg	C	U	760.000	ug/kg	C	UJ	420.000	ug/kg	C	U
Pesticide Organics/PCBs												
4,4'-DDD	4.100	ug/kg	C	U	7.700	ug/kg	C	UJ	4.100	ug/kg	C	U
4,4'-DDE	4.100	ug/kg	C	U	7.700	ug/kg	C	UJ	4.100	ug/kg	C	U
4,4'-DDT	4.100	ug/kg	C	U	7.700	ug/kg	C	UJ	4.100	ug/kg	C	U
Aldrin	2.100	ug/kg	C	U	4.000	ug/kg	C	UJ	2.100	ug/kg	C	U
Aroclor-1016	41.000	ug/kg	C	U	77.000	ug/kg	C	UJ	41.000	ug/kg	C	U
Aroclor-1221	84.000	ug/kg	C	U	160.000	ug/kg	C	UJ	84.000	ug/kg	C	U
Aroclor-1232	41.000	ug/kg	C	U	77.000	ug/kg	C	UJ	41.000	ug/kg	C	U
Aroclor-1242	41.000	ug/kg	C	U	77.000	ug/kg	C	UJ	41.000	ug/kg	C	U
Aroclor-1248	41.000	ug/kg	C	U	77.000	ug/kg	C	UJ	41.000	ug/kg	C	U
Aroclor-1254	41.000	ug/kg	C	U	77.000	ug/kg	C	UJ	41.000	ug/kg	C	U
Aroclor-1260	41.000	ug/kg	C	U	77.000	ug/kg	C	UJ	41.000	ug/kg	C	U
Dieldrin	4.100	ug/kg	C	U	7.700	ug/kg	C	UJ	4.100	ug/kg	C	U
Endosulfan II	4.100	ug/kg	C	U	7.700	ug/kg	C	UJ	4.100	ug/kg	C	U
Endosulfan sulfate	4.100	ug/kg	C	U	7.700	ug/kg	C	UJ	4.100	ug/kg	C	U
Endosulfan-I	2.100	ug/kg	C	U	4.000	ug/kg	C	UJ	2.100	ug/kg	C	U
Endrin	4.100	ug/kg	C	U	7.700	ug/kg	C	UJ	4.100	ug/kg	C	U
Endrin aldehyde	4.100	ug/kg	C	U	7.700	ug/kg	C	UJ	4.100	ug/kg	C	U
Endrin ketone	4.100	ug/kg	C	U	7.700	ug/kg	C	UJ	4.100	ug/kg	C	U
Heptachlor	2.100	ug/kg	C	U	4.000	ug/kg	C	UJ	2.100	ug/kg	C	U
Heptachlor epoxide	2.100	ug/kg	C	U	4.000	ug/kg	C	UJ	2.100	ug/kg	C	U
Methoxychlor	21.000	ug/kg	C	U	40.000	ug/kg	C	UJ	21.000	ug/kg	C	U
Toxaphene	210.000	ug/kg	C	U	400.000	ug/kg	C	UJ	210.000	ug/kg	C	U
alpha-BHC	2.100	ug/kg	C	U	4.000	ug/kg	C	UJ	2.100	ug/kg	C	U
alpha-Chlordane	4.100	ug/kg	C	U	4.000	ug/kg	C	UJ	2.100	ug/kg	C	U
beta-BHC	2.100	ug/kg	C	U	4.000	ug/kg	C	UJ	2.100	ug/kg	C	U
delta-BHC	2.100	ug/kg	C	U	4.000	ug/kg	C	UJ	2.100	ug/kg	C	U
gamma-BHC (Lindane)	2.100	ug/kg	C	U	4.000	ug/kg	C	UJ	2.100	ug/kg	C	U
gamma-Chlordane	4.100	ug/kg	C	U	4.000	ug/kg	C	UJ	2.100	ug/kg	C	U

TABLE D-6A
(Continued)

PHASE II - CHEMICAL PARAMETERS

BORING NUMBER	1959			1960			1960		
SAMPLE NUMBER	114815			114734			114737		
	11-13.5			5-6			13-13.5		
SAMPLING DATE	06/05/93			05/27/93			05/28/93		
CHEMICAL PARAMETERS	RESULTS	UNITS L	VQ	RESULTS	UNITS L	VQ	RESULTS	UNITS L	VQ
Inorganics									
Aluminum	13100.000	mg/kg D	-	3160.000	mg/kg C	-	4280.000	mg/kg C	-
Antimony	15.400	mg/kg D	UJ	1.100	mg/kg C	UJ	1.200	mg/kg C	UJ
Arsenic	7.500	mg/kg D	-	2.100	mg/kg C	J	3.800	mg/kg C	-
Barium	57.200	mg/kg D	-	42.400	mg/kg C	J	21.900	mg/kg C	J
Beryllium	0.820	mg/kg D	U	0.430	mg/kg C	U	0.460	mg/kg C	U
Cadmium	0.940	mg/kg D	U	1.100	mg/kg C	U	1.200	mg/kg C	U
Calcium	84900.000	mg/kg D	-	254000.000	mg/kg C	-	120000.000	mg/kg C	-
Chromium	14.600	mg/kg D	-	2.500	mg/kg C	J	4.700	mg/kg C	J
Cobalt	12.400	mg/kg D	-	2.100	mg/kg C	U	3.800	mg/kg C	J
Copper	23.700	mg/kg D	U	2.100	mg/kg C	U	9.600	mg/kg C	-
Cyanide	0.130	mg/kg D	U	0.120	mg/kg C	U	0.120	mg/kg C	U
Iron	24700.000	mg/kg D	-	3330.000	mg/kg C	-	10600.000	mg/kg C	-
Lead	10.900	mg/kg D	-	0.450	mg/kg C	U	6.200	mg/kg C	-
Magnesium	25700.000	mg/kg D	-	13800.000	mg/kg C	-	36000.000	mg/kg C	-
Manganese	498.000	mg/kg D	-	480.000	mg/kg C	J	424.000	mg/kg C	J
Mercury	0.070	mg/kg D	UJ	0.080	mg/kg C	U	0.100	mg/kg C	U
Molybdenum	1.800	mg/kg D	U	2.100	mg/kg C	U	2.800	mg/kg C	J
Nickel	28.200	mg/kg D	-	4.300	mg/kg C	U	8.100	mg/kg C	-
Potassium	3170.000	mg/kg D	-	21.500	mg/kg C	U	991.000	mg/kg C	-
Selenium	0.260	mg/kg D	UJ	0.360	mg/kg C	U	0.500	mg/kg C	U
Silicon	4060.000	mg/kg D	J	506.000	mg/kg C	J	908.000	mg/kg C	J
Silver	0.920	mg/kg D	U	2.100	mg/kg C	U	2.500	mg/kg C	J
Sodium	249.000	mg/kg D	-	253.000	mg/kg C	-	170.000	mg/kg C	-
Thallium	0.260	mg/kg D	U	0.360	mg/kg C	U	0.500	mg/kg C	U
Vanadium	23.600	mg/kg D	-	3.400	mg/kg C	J	14.000	mg/kg C	J
Zinc	70.000	mg/kg D	J	11.800	mg/kg C	J	30.300	mg/kg C	J
Volatile Organics									
1,1,1-Trichloroethane	13.000	ug/kg C	U	12.000	ug/kg C	U	12.000	ug/kg C	U
1,1,2,2-Tetrachloroethane	13.000	ug/kg C	U	12.000	ug/kg C	U	12.000	ug/kg C	U
1,1,2-Trichloroethane	13.000	ug/kg C	U	12.000	ug/kg C	U	12.000	ug/kg C	U
1,1-Dichloroethane	13.000	ug/kg C	U	12.000	ug/kg C	U	12.000	ug/kg C	U
1,1-Dichloroethene	13.000	ug/kg C	U	12.000	ug/kg C	U	12.000	ug/kg C	U
1,2-Dichloroethane	13.000	ug/kg C	U	12.000	ug/kg C	U	12.000	ug/kg C	U
1,2-Dichloroethene	13.000	ug/kg C	U	12.000	ug/kg C	U	12.000	ug/kg C	U
1,2-Dichloropropane	13.000	ug/kg C	U	12.000	ug/kg C	U	12.000	ug/kg C	U
2-Butanone	13.000	ug/kg C	U	12.000	ug/kg C	U	12.000	ug/kg C	U
2-Hexanone	13.000	ug/kg C	U	12.000	ug/kg C	U	12.000	ug/kg C	U
4-Methyl-2-pentanone	13.000	ug/kg C	U	12.000	ug/kg C	U	12.000	ug/kg C	U
Acetone	13.000	ug/kg C	U	12.000	ug/kg C	U	5.000	ug/kg C	J
Benzene	13.000	ug/kg C	U	12.000	ug/kg C	U	12.000	ug/kg C	U

000283

TABLE D-6A
(Continued)

PHASE II - CHEMICAL PARAMETERS

BORING NUMBER	1959			1960			1960		
SAMPLE NUMBER	114815			114734			114737		
	11-13.5			5-6			13-13.5		
SAMPLING DATE	06/05/93			05/27/93			05/28/93		
CHEMICAL PARAMETERS	RESULTS	UNITS	L VQ	RESULTS	UNITS	L VQ	RESULTS	UNITS	L VQ
Volatile Organics									
Bromodichloromethane	13.000	ug/kg	C U	12.000	ug/kg	C U	12.000	ug/kg	C U
Bromoform	13.000	ug/kg	C U	12.000	ug/kg	C U	12.000	ug/kg	C U
Bromomethane	13.000	ug/kg	C U	12.000	ug/kg	C U	12.000	ug/kg	C U
Carbon Tetrachloride	13.000	ug/kg	C U	12.000	ug/kg	C U	12.000	ug/kg	C U
Carbon disulfide	13.000	ug/kg	C U	12.000	ug/kg	C U	12.000	ug/kg	C U
Chlorobenzene	13.000	ug/kg	C U	12.000	ug/kg	C U	12.000	ug/kg	C U
Chloroethane	13.000	ug/kg	C U	12.000	ug/kg	C U	12.000	ug/kg	C U
Chloroform	13.000	ug/kg	C U	12.000	ug/kg	C U	12.000	ug/kg	C U
Chloromethane	13.000	ug/kg	C UJ	12.000	ug/kg	C U	12.000	ug/kg	C UJ
Dibromochloromethane	13.000	ug/kg	C U	12.000	ug/kg	C U	12.000	ug/kg	C U
Ethylbenzene	13.000	ug/kg	C U	12.000	ug/kg	C U	12.000	ug/kg	C U
Methylene chloride	23.000	ug/kg	C U	12.000	ug/kg	C U	77.000	ug/kg	C U
Styrene	13.000	ug/kg	C U	12.000	ug/kg	C U	12.000	ug/kg	C U
Tetrachloroethene	13.000	ug/kg	C U	12.000	ug/kg	C U	12.000	ug/kg	C U
Toluene	13.000	ug/kg	C U	12.000	ug/kg	C U	12.000	ug/kg	C U
Trichloroethene	13.000	ug/kg	C U	12.000	ug/kg	C U	12.000	ug/kg	C U
Vinyl Acetate	13.000	ug/kg	C U	12.000	ug/kg	C U	12.000	ug/kg	C U
Vinyl chloride	13.000	ug/kg	C U	12.000	ug/kg	C U	12.000	ug/kg	C U
Xylenes, Total	13.000	ug/kg	C U	12.000	ug/kg	C U	12.000	ug/kg	C U
cis-1,3-Dichloropropene	13.000	ug/kg	C U	12.000	ug/kg	C U	12.000	ug/kg	C U
trans-1,3-Dichloropropene	13.000	ug/kg	C U	12.000	ug/kg	C U	12.000	ug/kg	C U
Semivolatile Organics									
1,2,4-Trichlorobenzene	410.000	ug/kg	C U	590.000	ug/kg	C U	410.000	ug/kg	C U
1,2-Dichlorobenzene	410.000	ug/kg	C U	590.000	ug/kg	C U	410.000	ug/kg	C U
1,3-Dichlorobenzene	410.000	ug/kg	C U	590.000	ug/kg	C U	410.000	ug/kg	C U
1,4-Dichlorobenzene	410.000	ug/kg	C U	590.000	ug/kg	C U	410.000	ug/kg	C U
2,4,5-Trichlorophenol	990.000	ug/kg	C U	1400.000	ug/kg	C U	1000.000	ug/kg	C U
2,4,6-Trichlorophenol	410.000	ug/kg	C U	590.000	ug/kg	C U	410.000	ug/kg	C U
2,4-Dichlorophenol	410.000	ug/kg	C U	590.000	ug/kg	C U	410.000	ug/kg	C U
2,4-Dimethylphenol	410.000	ug/kg	C U	590.000	ug/kg	C U	410.000	ug/kg	C U
2,4-Dinitrophenol	2000.000	ug/kg	C UJ	1400.000	ug/kg	C UJ	1000.000	ug/kg	C UJ
2,4-Dinitrotoluene	410.000	ug/kg	C U	590.000	ug/kg	C U	410.000	ug/kg	C U
2,6-Dinitrotoluene	410.000	ug/kg	C U	590.000	ug/kg	C U	410.000	ug/kg	C U
2-Benzyl-4-chlorophenol	410.000	ug/kg	C UJ	590.000	ug/kg	C UJ	410.000	ug/kg	C U
2-Chloronaphthalene	410.000	ug/kg	C U	590.000	ug/kg	C U	410.000	ug/kg	C U
2-Chlorophenol	410.000	ug/kg	C U	590.000	ug/kg	C U	410.000	ug/kg	C U
2-Methylnaphthalene	410.000	ug/kg	C U	590.000	ug/kg	C U	410.000	ug/kg	C U
2-Methylphenol	410.000	ug/kg	C U	590.000	ug/kg	C U	410.000	ug/kg	C U
2-Nitroaniline	990.000	ug/kg	C U	1400.000	ug/kg	C U	1000.000	ug/kg	C U
2-Nitrophenol	410.000	ug/kg	C U	590.000	ug/kg	C U	410.000	ug/kg	C U

TABLE D-6A
(Continued)

PHASE II - CHEMICAL PARAMETERS

BORING NUMBER	1959			1960			1960		
SAMPLE NUMBER	114815			114734			114737		
	11-13.5			5-6			13-13.5		
SAMPLING DATE	06/05/93			05/27/93			05/28/93		
CHEMICAL PARAMETERS	RESULTS	UNITS	L VQ	RESULTS	UNITS	L VQ	RESULTS	UNITS	L VQ
Semivolatile Organics									
3,3'-Dichlorobenzidine	410.000	ug/kg	C U	590.000	ug/kg	C U	410.000	ug/kg	C U
3-Nitroaniline	990.000	ug/kg	C U	1400.000	ug/kg	C U	1000.000	ug/kg	C U
4,6-Dinitro-2-methylphenol	990.000	ug/kg	C UJ	1400.000	ug/kg	C U	1000.000	ug/kg	C U
4-Bromophenyl phenyl ether	410.000	ug/kg	C U	590.000	ug/kg	C U	410.000	ug/kg	C U
4-Chloro-3-methylphenol	410.000	ug/kg	C U	590.000	ug/kg	C U	410.000	ug/kg	C U
4-Chlorophenylphenyl ether	410.000	ug/kg	C U	590.000	ug/kg	C U	410.000	ug/kg	C U
4-Methylphenol	410.000	ug/kg	C U	590.000	ug/kg	C U	410.000	ug/kg	C U
4-Nitroaniline	990.000	ug/kg	C U	1400.000	ug/kg	C U	1000.000	ug/kg	C U
4-Nitrophenol	990.000	ug/kg	C UJ	1400.000	ug/kg	C U	1000.000	ug/kg	C U
Acenaphthene	410.000	ug/kg	C U	590.000	ug/kg	C U	410.000	ug/kg	C U
Acenaphthylene	410.000	ug/kg	C U	590.000	ug/kg	C U	410.000	ug/kg	C U
Anthracene	410.000	ug/kg	C U	590.000	ug/kg	C U	410.000	ug/kg	C U
Benzo(a)anthracene	410.000	ug/kg	C U	590.000	ug/kg	C U	410.000	ug/kg	C U
Benzo(a)pyrene	410.000	ug/kg	C U	590.000	ug/kg	C U	410.000	ug/kg	C U
Benzo(b)fluoranthene	410.000	ug/kg	C U	590.000	ug/kg	C U	410.000	ug/kg	C U
Benzo(g,h,i)perylene	410.000	ug/kg	C U	590.000	ug/kg	C U	410.000	ug/kg	C U
Benzo(k)fluoranthene	410.000	ug/kg	C U	590.000	ug/kg	C U	410.000	ug/kg	C U
Benzoic acid	2000.000	ug/kg	C UJ	2900.000	ug/kg	C UJ	2000.000	ug/kg	C UJ
Benzyl alcohol	410.000	ug/kg	C UJ	590.000	ug/kg	C R	410.000	ug/kg	C R
Butyl benzyl phthalate	410.000	ug/kg	C U	590.000	ug/kg	C U	410.000	ug/kg	C U
Carbazole	410.000	ug/kg	C U	590.000	ug/kg	C U	410.000	ug/kg	C U
Chrysene	410.000	ug/kg	C U	590.000	ug/kg	C U	410.000	ug/kg	C U
Di-n-butyl phthalate	62.000	ug/kg	C J	590.000	ug/kg	C U	410.000	ug/kg	C U
Di-n-octyl phthalate	410.000	ug/kg	C U	590.000	ug/kg	C U	410.000	ug/kg	C U
Dibenzo(a,h)anthracene	410.000	ug/kg	C U	590.000	ug/kg	C U	410.000	ug/kg	C U
Dibenzofuran	410.000	ug/kg	C U	590.000	ug/kg	C U	410.000	ug/kg	C U
Diethyl phthalate	410.000	ug/kg	C U	590.000	ug/kg	C U	410.000	ug/kg	C U
Dimethyl phthalate	410.000	ug/kg	C U	590.000	ug/kg	C U	410.000	ug/kg	C U
Fluoranthene	410.000	ug/kg	C U	590.000	ug/kg	C U	410.000	ug/kg	C U
Fluorene	410.000	ug/kg	C U	590.000	ug/kg	C U	410.000	ug/kg	C U
Hexachlorobenzene	410.000	ug/kg	C U	590.000	ug/kg	C U	410.000	ug/kg	C U
Hexachlorobutadiene	410.000	ug/kg	C U	590.000	ug/kg	C U	410.000	ug/kg	C U
Hexachlorocyclopentadiene	410.000	ug/kg	C U	590.000	ug/kg	C U	410.000	ug/kg	C U
Hexachloroethane	410.000	ug/kg	C U	590.000	ug/kg	C U	410.000	ug/kg	C U
Indeno(1,2,3-cd)pyrene	410.000	ug/kg	C U	590.000	ug/kg	C U	410.000	ug/kg	C U
Isophorone	410.000	ug/kg	C U	590.000	ug/kg	C U	410.000	ug/kg	C U
N-Nitroso-di-n-propylamine	410.000	ug/kg	C U	590.000	ug/kg	C U	410.000	ug/kg	C U
N-Nitrosodimethylamine	410.000	ug/kg	C U	590.000	ug/kg	C U	410.000	ug/kg	C U
N-Nitrosodiphenylamine	410.000	ug/kg	C U	590.000	ug/kg	C U	410.000	ug/kg	C U
Naphthalene	410.000	ug/kg	C U	590.000	ug/kg	C U	410.000	ug/kg	C U
Nitrobenzene	410.000	ug/kg	C U	590.000	ug/kg	C U	410.000	ug/kg	C U
Pentachlorophenol	990.000	ug/kg	C UJ	1400.000	ug/kg	C U	1000.000	ug/kg	C U

000745

TABLE D-6A
(Continued)

PHASE II - CHEMICAL PARAMETERS

BORING NUMBER	1959				1960				1960			
SAMPLE NUMBER	114815				114734				114737			
	11-13.5				5-6				13-13.5			
SAMPLING DATE	06/05/93				05/27/93				05/28/93			
CHEMICAL PARAMETERS	RESULTS	UNITS	L	VQ	RESULTS	UNITS	L	VQ	RESULTS	UNITS	L	VQ
Semivolatile Organics												
Phenanthrene	410.000	ug/kg	C	U	590.000	ug/kg	C	U	410.000	ug/kg	C	U
Phenol	410.000	ug/kg	C	U	590.000	ug/kg	C	U	410.000	ug/kg	C	U
Pyrene	410.000	ug/kg	C	U	590.000	ug/kg	C	U	410.000	ug/kg	C	U
Tributyl phosphate	410.000	ug/kg	C	U	590.000	ug/kg	C	U	410.000	ug/kg	C	U
bis(2-Chloroethoxy)methane	410.000	ug/kg	C	U	590.000	ug/kg	C	U	410.000	ug/kg	C	U
bis(2-Chloroethyl)ether	410.000	ug/kg	C	U	590.000	ug/kg	C	U	410.000	ug/kg	C	U
bis(2-Chloroisopropyl) ether	410.000	ug/kg	C	U	590.000	ug/kg	C	U	410.000	ug/kg	C	U
bis(2-Ethylhexyl) phthalate	410.000	ug/kg	C	U	590.000	ug/kg	C	U	410.000	ug/kg	C	U
p-Chloroaniline	410.000	ug/kg	C	U	590.000	ug/kg	C	U	410.000	ug/kg	C	U
Pesticide Organics/PCBs												
4,4'-DDD	4.200	ug/kg	C	U	6.000	ug/kg	C	UJ	4.200	ug/kg	C	U
4,4'-DDE	4.200	ug/kg	C	U	6.000	ug/kg	C	UJ	4.200	ug/kg	C	U
4,4'-DDT	4.200	ug/kg	C	U	6.000	ug/kg	C	UJ	4.200	ug/kg	C	U
Aldrin	2.200	ug/kg	C	U	3.100	ug/kg	C	UJ	2.100	ug/kg	C	U
Aroclor-1016	42.000	ug/kg	C	U	60.000	ug/kg	C	U	42.000	ug/kg	C	U
Aroclor-1221	85.000	ug/kg	C	U	120.000	ug/kg	C	U	85.000	ug/kg	C	U
Aroclor-1232	42.000	ug/kg	C	U	60.000	ug/kg	C	U	42.000	ug/kg	C	U
Aroclor-1242	42.000	ug/kg	C	U	60.000	ug/kg	C	U	42.000	ug/kg	C	U
Aroclor-1248	42.000	ug/kg	C	U	60.000	ug/kg	C	U	42.000	ug/kg	C	U
Aroclor-1254	42.000	ug/kg	C	U	60.000	ug/kg	C	U	42.000	ug/kg	C	U
Aroclor-1260	42.000	ug/kg	C	U	60.000	ug/kg	C	U	42.000	ug/kg	C	U
Dieldrin	4.200	ug/kg	C	U	6.000	ug/kg	C	UJ	4.200	ug/kg	C	U
Endosulfan II	4.200	ug/kg	C	U	6.000	ug/kg	C	UJ	4.200	ug/kg	C	U
Endosulfan sulfate	4.200	ug/kg	C	U	6.000	ug/kg	C	UJ	4.200	ug/kg	C	U
Endosulfan-I	2.200	ug/kg	C	U	3.100	ug/kg	C	UJ	2.100	ug/kg	C	U
Endrin	4.200	ug/kg	C	U	6.000	ug/kg	C	UJ	4.200	ug/kg	C	U
Endrin aldehyde	4.200	ug/kg	C	U	6.000	ug/kg	C	UJ	4.200	ug/kg	C	U
Endrin ketone	4.200	ug/kg	C	U	6.000	ug/kg	C	UJ	4.200	ug/kg	C	U
Heptachlor	2.200	ug/kg	C	U	3.100	ug/kg	C	UJ	2.100	ug/kg	C	U
Heptachlor epoxide	2.200	ug/kg	C	U	3.100	ug/kg	C	UJ	2.100	ug/kg	C	U
Methoxychlor	22.000	ug/kg	C	U	31.000	ug/kg	C	UJ	21.000	ug/kg	C	U
Toxaphene	220.000	ug/kg	C	U	310.000	ug/kg	C	U	210.000	ug/kg	C	U
alpha-BHC	2.200	ug/kg	C	U	3.100	ug/kg	C	UJ	2.100	ug/kg	C	U
alpha-Chlordane	2.200	ug/kg	C	U	3.100	ug/kg	C	UJ	2.100	ug/kg	C	U
beta-BHC	2.200	ug/kg	C	U	3.100	ug/kg	C	UJ	2.100	ug/kg	C	U
delta-BHC	2.200	ug/kg	C	U	3.100	ug/kg	C	UJ	2.100	ug/kg	C	U
gamma-BHC (Lindane)	2.200	ug/kg	C	U	3.100	ug/kg	C	UJ	2.100	ug/kg	C	U
gamma-Chlordane	2.200	ug/kg	C	U	3.100	ug/kg	C	UJ	2.100	ug/kg	C	U

TABLE D-6A
(Continued)

PHASE II - CHEMICAL PARAMETERS

BORING NUMBER	1961			1961			1962		
SAMPLE NUMBER	114745			114743			114605		
	2-4			12-13			4.5-7		
SAMPLING DATE	06/01/93			06/01/93			05/20/93		
CHEMICAL PARAMETERS	RESULTS	UNITS	L VQ	RESULTS	UNITS	L VQ	RESULTS	UNITS	L VQ
Inorganics									
Aluminum	5810.000	mg/kg	C J	12000.000	mg/kg	C -	3580.000	mg/kg	C J
Antimony	2.700	mg/kg	C UJ	1.200	mg/kg	C UJ	1.900	mg/kg	C UJ
Arsenic	4.000	mg/kg	C J	4.300	mg/kg	C -	2.600	mg/kg	C J
Barium	54.400	mg/kg	C J	49.100	mg/kg	C -	46.500	mg/kg	C -
Beryllium	0.830	mg/kg	C UJ	0.470	mg/kg	C U	0.740	mg/kg	C U
Cadmium	2.100	mg/kg	C UJ	1.200	mg/kg	C U	1.900	mg/kg	C U
Calcium	328000.000	mg/kg	C J	83600.000	mg/kg	C -	270000.000	mg/kg	C -
Chromium	6.100	mg/kg	C J	13.700	mg/kg	C -	3.700	mg/kg	C U
Cobalt	4.100	mg/kg	C UJ	7.500	mg/kg	C -	3.700	mg/kg	C U
Copper	4.100	mg/kg	C UJ	20.300	mg/kg	C -	3.700	mg/kg	C U
Cyanide	0.220	mg/kg	C UJ	0.130	mg/kg	C U	0.190	mg/kg	C U
Iron	NA			21700.000	mg/kg	C -	3410.000	mg/kg	C -
Lead	0.810	mg/kg	C UJ	10.200	mg/kg	C -	0.900	mg/kg	C -
Magnesium	21000.000	mg/kg	C J	27100.000	mg/kg	C -	12800.000	mg/kg	C -
Manganese	709.000	mg/kg	C J	401.000	mg/kg	C -	501.000	mg/kg	C -
Mercury	0.220	mg/kg	C UJ	0.120	mg/kg	C U	0.130	mg/kg	C U
Molybdenum	4.100	mg/kg	C UJ	6.700	mg/kg	C -	3.700	mg/kg	C U
Nickel	8.300	mg/kg	C UJ	22.800	mg/kg	C -	7.400	mg/kg	C U
Potassium	41.500	mg/kg	C UJ	2500.000	mg/kg	C -	37.200	mg/kg	C U
Selenium	0.810	mg/kg	C UJ	0.430	mg/kg	C U	0.700	mg/kg	C U
Silicon	5940.000	mg/kg	C J	1230.000	mg/kg	C J	3950.000	mg/kg	C -
Silver	4.100	mg/kg	C UJ	5.800	mg/kg	C -	3.700	mg/kg	C U
Sodium	232.000	mg/kg	C J	157.000	mg/kg	C -	197.000	mg/kg	C -
Thallium	NA			0.430	mg/kg	C U	0.700	mg/kg	C U
Vanadium	7.500	mg/kg	C J	28.300	mg/kg	C -	3.900	mg/kg	C -
Zinc	25.600	mg/kg	C J	64.600	mg/kg	C -	13.300	mg/kg	C -
Volatile Organics									
1,1,1-Trichloroethane	22.000	ug/kg	C U	12.000	ug/kg	C U	19.000	ug/kg	C U
1,1,2,2-Tetrachloroethane	22.000	ug/kg	C U	12.000	ug/kg	C U	19.000	ug/kg	C U
1,1,2-Trichloroethane	22.000	ug/kg	C U	12.000	ug/kg	C U	19.000	ug/kg	C U
1,1-Dichloroethane	22.000	ug/kg	C U	12.000	ug/kg	C U	19.000	ug/kg	C UJ
1,1-Dichloroethene	22.000	ug/kg	C U	12.000	ug/kg	C U	19.000	ug/kg	C U
1,2-Dichloroethane	22.000	ug/kg	C UJ	12.000	ug/kg	C UJ	19.000	ug/kg	C U
1,2-Dichloroethene	22.000	ug/kg	C U	12.000	ug/kg	C U	19.000	ug/kg	C U
1,2-Dichloropropane	22.000	ug/kg	C U	12.000	ug/kg	C U	19.000	ug/kg	C U
2-Butanone	22.000	ug/kg	C U	12.000	ug/kg	C U	19.000	ug/kg	C UJ
2-Hexanone	22.000	ug/kg	C U	12.000	ug/kg	C U	19.000	ug/kg	C U
4-Methyl-2-pentanone	22.000	ug/kg	C U	12.000	ug/kg	C U	19.000	ug/kg	C U
Acetone	38.000	ug/kg	C -	3.000	ug/kg	C J	19.000	ug/kg	C U
Benzene	22.000	ug/kg	C U	12.000	ug/kg	C U	19.000	ug/kg	C U

000727

TABLE D-6A
(Continued)

PHASE II - CHEMICAL PARAMETERS

BORING NUMBER	1961				1961				1962			
SAMPLE NUMBER	114745				114743				114605			
	2-4				12-13				4.5-7			
SAMPLING DATE	06/01/93				06/01/93				05/20/93			
CHEMICAL PARAMETERS	RESULTS	UNITS	L	VQ	RESULTS	UNITS	L	VQ	RESULTS	UNITS	L	VQ
Volatile Organics												
Bromodichloromethane	22.000	ug/kg	C	U	12.000	ug/kg	C	U	19.000	ug/kg	C	U
Bromoform	22.000	ug/kg	C	U	12.000	ug/kg	C	U	19.000	ug/kg	C	U
Bromomethane	22.000	ug/kg	C	U	12.000	ug/kg	C	U	19.000	ug/kg	C	U
Carbon Tetrachloride	22.000	ug/kg	C	U	12.000	ug/kg	C	U	19.000	ug/kg	C	U
Carbon disulfide	22.000	ug/kg	C	U	12.000	ug/kg	C	U	19.000	ug/kg	C	U
Chlorobenzene	22.000	ug/kg	C	U	12.000	ug/kg	C	U	19.000	ug/kg	C	U
Chloroethane	22.000	ug/kg	C	U	12.000	ug/kg	C	U	19.000	ug/kg	C	UJ
Chloroform	22.000	ug/kg	C	U	12.000	ug/kg	C	U	19.000	ug/kg	C	U
Chloromethane	22.000	ug/kg	C	U	12.000	ug/kg	C	U	19.000	ug/kg	C	UJ
Dibromochloromethane	22.000	ug/kg	C	U	12.000	ug/kg	C	U	19.000	ug/kg	C	U
Ethylbenzene	22.000	ug/kg	C	U	12.000	ug/kg	C	U	19.000	ug/kg	C	U
Methylene chloride	37.000	ug/kg	C	U	12.000	ug/kg	C	U	19.000	ug/kg	C	U
Styrene	22.000	ug/kg	C	U	12.000	ug/kg	C	U	19.000	ug/kg	C	U
Tetrachloroethene	22.000	ug/kg	C	U	12.000	ug/kg	C	U	19.000	ug/kg	C	U
Toluene	5.000	ug/kg	C	J	12.000	ug/kg	C	U	19.000	ug/kg	C	U
Trichloroethene	22.000	ug/kg	C	U	12.000	ug/kg	C	U	19.000	ug/kg	C	U
Vinyl Acetate	22.000	ug/kg	C	U	12.000	ug/kg	C	U	19.000	ug/kg	C	U
Vinyl chloride	22.000	ug/kg	C	U	12.000	ug/kg	C	U	19.000	ug/kg	C	U
Xylenes, Total	22.000	ug/kg	C	U	12.000	ug/kg	C	U	19.000	ug/kg	C	U
cis-1,3-Dichloropropene	22.000	ug/kg	C	U	12.000	ug/kg	C	U	19.000	ug/kg	C	U
trans-1,3-Dichloropropene	22.000	ug/kg	C	U	12.000	ug/kg	C	U	19.000	ug/kg	C	U
Semivolatile Organics												
1,2,4-Trichlorobenzene	740.000	ug/kg	C	U	410.000	ug/kg	C	U	610.000	ug/kg	C	U
1,2-Dichlorobenzene	740.000	ug/kg	C	U	410.000	ug/kg	C	U	610.000	ug/kg	C	U
1,3-Dichlorobenzene	740.000	ug/kg	C	U	410.000	ug/kg	C	U	610.000	ug/kg	C	U
1,4-Dichlorobenzene	740.000	ug/kg	C	U	410.000	ug/kg	C	U	610.000	ug/kg	C	U
2,4,5-Trichlorophenol	1800.000	ug/kg	C	U	1000.000	ug/kg	C	U	1500.000	ug/kg	C	U
2,4,6-Trichlorophenol	740.000	ug/kg	C	U	410.000	ug/kg	C	U	610.000	ug/kg	C	U
2,4-Dichlorophenol	740.000	ug/kg	C	U	410.000	ug/kg	C	U	610.000	ug/kg	C	U
2,4-Dimethylphenol	740.000	ug/kg	C	U	410.000	ug/kg	C	U	610.000	ug/kg	C	U
2,4-Dinitrophenol	1800.000	ug/kg	C	UJ	1000.000	ug/kg	C	UJ	1500.000	ug/kg	C	UJ
2,4-Dinitrotoluene	740.000	ug/kg	C	U	410.000	ug/kg	C	U	610.000	ug/kg	C	U
2,6-Dinitrotoluene	740.000	ug/kg	C	U	410.000	ug/kg	C	U	610.000	ug/kg	C	U
2-Benzyl-4-chlorophenol	740.000	ug/kg	C	UJ	410.000	ug/kg	C	UJ	NA			
2-Chloronaphthalene	740.000	ug/kg	C	U	410.000	ug/kg	C	U	610.000	ug/kg	C	U
2-Chlorophenol	740.000	ug/kg	C	U	410.000	ug/kg	C	U	610.000	ug/kg	C	U
2-Methylnaphthalene	740.000	ug/kg	C	U	410.000	ug/kg	C	U	610.000	ug/kg	C	U
2-Methylphenol	740.000	ug/kg	C	U	410.000	ug/kg	C	U	610.000	ug/kg	C	U
2-Nitroaniline	1800.000	ug/kg	C	U	1000.000	ug/kg	C	U	1500.000	ug/kg	C	U
2-Nitrophenol	740.000	ug/kg	C	U	410.000	ug/kg	C	U	610.000	ug/kg	C	U

000748
6508

TABLE D-6A
(Continued)

PHASE II - CHEMICAL PARAMETERS

BORING NUMBER	1961				1961				1962			
SAMPLE NUMBER	114745				114743				114605			
	2-4				12-13				4.5-7			
SAMPLING DATE	06/01/93				06/01/93				05/20/93			
CHEMICAL PARAMETERS	RESULTS	UNITS	L	VQ	RESULTS	UNITS	L	VQ	RESULTS	UNITS	L	VQ
Semivolatile Organics												
3,3'-Dichlorobenzidine	740.000	ug/kg	C	U	410.000	ug/kg	C	U	610.000	ug/kg	C	UJ
3-Nitroaniline	1800.000	ug/kg	C	U	1000.000	ug/kg	C	U	1500.000	ug/kg	C	R
4,6-Dinitro-2-methylphenol	1800.000	ug/kg	C	U	1000.000	ug/kg	C	U	1500.000	ug/kg	C	U
4-Bromophenyl phenyl ether	740.000	ug/kg	C	U	410.000	ug/kg	C	U	610.000	ug/kg	C	U
4-Chloro-3-methylphenol	740.000	ug/kg	C	U	410.000	ug/kg	C	U	610.000	ug/kg	C	U
4-Chlorophenylphenyl ether	740.000	ug/kg	C	U	410.000	ug/kg	C	U	610.000	ug/kg	C	U
4-Methylphenol	740.000	ug/kg	C	U	410.000	ug/kg	C	U	610.000	ug/kg	C	U
4-Nitroaniline	1800.000	ug/kg	C	U	1000.000	ug/kg	C	U	1500.000	ug/kg	C	UJ
4-Nitrophenol	1800.000	ug/kg	C	U	1000.000	ug/kg	C	U	1500.000	ug/kg	C	U
Acenaphthene	740.000	ug/kg	C	U	410.000	ug/kg	C	U	610.000	ug/kg	C	U
Acenaphthylene	740.000	ug/kg	C	U	410.000	ug/kg	C	U	610.000	ug/kg	C	U
Anthracene	740.000	ug/kg	C	U	410.000	ug/kg	C	U	610.000	ug/kg	C	U
Benzo(a)anthracene	740.000	ug/kg	C	U	410.000	ug/kg	C	U	610.000	ug/kg	C	U
Benzo(a)pyrene	740.000	ug/kg	C	U	410.000	ug/kg	C	U	610.000	ug/kg	C	U
Benzo(b)fluoranthene	740.000	ug/kg	C	U	410.000	ug/kg	C	U	610.000	ug/kg	C	U
Benzo(g,h,i)perylene	740.000	ug/kg	C	UJ	410.000	ug/kg	C	UJ	610.000	ug/kg	C	U
Benzo(k)fluoranthene	740.000	ug/kg	C	U	410.000	ug/kg	C	U	610.000	ug/kg	C	U
Benzoic acid	3600.000	ug/kg	C	U	2000.000	ug/kg	C	U	NA			
Benzyl alcohol	740.000	ug/kg	C	R	410.000	ug/kg	C	R	NA			
Butyl benzyl phthalate	740.000	ug/kg	C	U	410.000	ug/kg	C	U	610.000	ug/kg	C	U
Carbazole	740.000	ug/kg	C	U	410.000	ug/kg	C	U	610.000	ug/kg	C	U
Chrysene	740.000	ug/kg	C	U	410.000	ug/kg	C	U	610.000	ug/kg	C	U
Di-n-butyl phthalate	740.000	ug/kg	C	U	68.000	ug/kg	C	J	72.000	ug/kg	C	J
Di-n-octyl phthalate	740.000	ug/kg	C	UJ	410.000	ug/kg	C	UJ	610.000	ug/kg	C	U
Dibenzo(a,h)anthracene	740.000	ug/kg	C	UJ	410.000	ug/kg	C	UJ	610.000	ug/kg	C	U
Dibenzofuran	740.000	ug/kg	C	U	410.000	ug/kg	C	U	610.000	ug/kg	C	U
Diethyl phthalate	740.000	ug/kg	C	U	410.000	ug/kg	C	U	610.000	ug/kg	C	U
Dimethyl phthalate	740.000	ug/kg	C	U	410.000	ug/kg	C	U	610.000	ug/kg	C	U
Fluoranthene	740.000	ug/kg	C	U	410.000	ug/kg	C	U	610.000	ug/kg	C	U
Fluorene	740.000	ug/kg	C	U	410.000	ug/kg	C	U	610.000	ug/kg	C	U
Hexachlorobenzene	740.000	ug/kg	C	U	410.000	ug/kg	C	U	610.000	ug/kg	C	U
Hexachlorobutadiene	740.000	ug/kg	C	U	410.000	ug/kg	C	U	610.000	ug/kg	C	U
Hexachlorocyclopentadiene	740.000	ug/kg	C	U	410.000	ug/kg	C	U	610.000	ug/kg	C	U
Hexachloroethane	740.000	ug/kg	C	U	410.000	ug/kg	C	U	610.000	ug/kg	C	U
Indeno(1,2,3-cd)pyrene	740.000	ug/kg	C	UJ	410.000	ug/kg	C	UJ	610.000	ug/kg	C	U
Isophorone	740.000	ug/kg	C	U	410.000	ug/kg	C	U	610.000	ug/kg	C	U
N-Nitroso-di-n-propylamine	740.000	ug/kg	C	U	410.000	ug/kg	C	U	610.000	ug/kg	C	U
N-Nitrosodimethylamine	740.000	ug/kg	C	U	410.000	ug/kg	C	U	NA			
N-Nitrosodiphenylamine	740.000	ug/kg	C	U	410.000	ug/kg	C	U	610.000	ug/kg	C	U
Naphthalene	740.000	ug/kg	C	U	410.000	ug/kg	C	U	610.000	ug/kg	C	U
Nitrobenzene	740.000	ug/kg	C	U	410.000	ug/kg	C	U	610.000	ug/kg	C	U
Pentachlorophenol	1800.000	ug/kg	C	U	1000.000	ug/kg	C	U	1500.000	ug/kg	C	U

000749

TABLE D-6A
(Continued)

PHASE II - CHEMICAL PARAMETERS

BORING NUMBER	1961			1961			1962		
SAMPLE NUMBER	114745			114743			114605		
	2-4			12-13			4.5-7		
SAMPLING DATE	06/01/93			06/01/93			05/20/93		
CHEMICAL PARAMETERS	RESULTS	UNITS L	VQ	RESULTS	UNITS L	VQ	RESULTS	UNITS L	VQ
Semivolatile Organics									
Phenanthrene	740.000	ug/kg C	U	410.000	ug/kg C	U	610.000	ug/kg C	U
Phenol	740.000	ug/kg C	U	410.000	ug/kg C	U	610.000	ug/kg C	U
Pyrene	740.000	ug/kg C	U	410.000	ug/kg C	U	610.000	ug/kg C	U
Tributyl phosphate	740.000	ug/kg C	U	410.000	ug/kg C	U	NA		
bis(2-Chloroethoxy)methane	740.000	ug/kg C	U	410.000	ug/kg C	U	610.000	ug/kg C	U
bis(2-Chloroethyl)ether	740.000	ug/kg C	U	410.000	ug/kg C	U	610.000	ug/kg C	U
bis(2-Chloroisopropyl) ether	740.000	ug/kg C	U	410.000	ug/kg C	U	610.000	ug/kg C	U
bis(2-Ethylhexyl) phthalate	150.000	ug/kg C	J	78.000	ug/kg C	J	610.000	ug/kg C	U
p-Chloroaniline	740.000	ug/kg C	U	410.000	ug/kg C	U	610.000	ug/kg C	UJ
Pesticide Organics/PCBs									
4,4'-DDD	7.400	ug/kg C	UJ	4.100	ug/kg C	U	6.100	ug/kg C	U
4,4'-DDE	7.400	ug/kg C	UJ	4.100	ug/kg C	U	6.100	ug/kg C	U
4,4'-DDT	7.400	ug/kg C	UJ	4.100	ug/kg C	U	6.100	ug/kg C	U
Aldrin	3.800	ug/kg C	UJ	2.100	ug/kg C	U	3.100	ug/kg C	U
Aroclor-1016	74.000	ug/kg C	U	41.000	ug/kg C	U	61.000	ug/kg C	U
Aroclor-1221	150.000	ug/kg C	U	84.000	ug/kg C	U	120.000	ug/kg C	U
Aroclor-1232	74.000	ug/kg C	U	41.000	ug/kg C	U	61.000	ug/kg C	U
Aroclor-1242	74.000	ug/kg C	U	41.000	ug/kg C	U	61.000	ug/kg C	U
Aroclor-1248	74.000	ug/kg C	U	41.000	ug/kg C	U	61.000	ug/kg C	U
Aroclor-1254	74.000	ug/kg C	U	41.000	ug/kg C	U	61.000	ug/kg C	U
Aroclor-1260	74.000	ug/kg C	U	41.000	ug/kg C	U	61.000	ug/kg C	U
Dieldrin	7.400	ug/kg C	UJ	4.100	ug/kg C	U	6.100	ug/kg C	U
Endosulfan II	7.400	ug/kg C	UJ	4.100	ug/kg C	U	6.100	ug/kg C	U
Endosulfan sulfate	7.400	ug/kg C	UJ	4.100	ug/kg C	U	6.100	ug/kg C	U
Endosulfan-I	3.800	ug/kg C	UJ	2.100	ug/kg C	U	3.100	ug/kg C	U
Endrin	7.400	ug/kg C	UJ	4.100	ug/kg C	U	6.100	ug/kg C	U
Endrin aldehyde	7.400	ug/kg C	UJ	4.100	ug/kg C	UJ	6.100	ug/kg C	U
Endrin ketone	7.400	ug/kg C	UJ	4.100	ug/kg C	U	6.100	ug/kg C	U
Heptachlor	3.800	ug/kg C	UJ	2.100	ug/kg C	U	3.100	ug/kg C	U
Heptachlor epoxide	3.800	ug/kg C	UJ	2.100	ug/kg C	U	3.100	ug/kg C	U
Methoxychlor	38.000	ug/kg C	UJ	21.000	ug/kg C	U	31.000	ug/kg C	U
Toxaphene	380.000	ug/kg C	U	210.000	ug/kg C	U	310.000	ug/kg C	U
alpha-BHC	3.800	ug/kg C	UJ	2.100	ug/kg C	U	3.100	ug/kg C	U
alpha-Chlordane	3.800	ug/kg C	UJ	2.100	ug/kg C	U	3.100	ug/kg C	U
beta-BHC	3.800	ug/kg C	UJ	2.100	ug/kg C	U	3.100	ug/kg C	U
delta-BHC	3.800	ug/kg C	UJ	2.100	ug/kg C	UJ	3.100	ug/kg C	U
gamma-BHC (Lindane)	3.800	ug/kg C	UJ	2.100	ug/kg C	U	3.100	ug/kg C	U
gamma-Chlordane	3.800	ug/kg C	UJ	2.100	ug/kg C	U	3.100	ug/kg C	U

TABLE D-6A
(Continued)

PHASE II - CHEMICAL PARAMETERS

BORING NUMBER	1962			1963			1963		
SAMPLE NUMBER	114607			114762			114766		
	12.5-14			2-4			13.5-15.5		
SAMPLING DATE	05/25/93			06/03/93			06/03/93		
CHEMICAL PARAMETERS	RESULTS	UNITS L	VQ	RESULTS	UNITS L	VQ	RESULTS	UNITS L	VQ
Inorganics									
Aluminum	3780.000	mg/kg C	-	3770.000	mg/kg D	-	4330.000	mg/kg D	-
Antimony	1.200	mg/kg C	UJ	1.700	mg/kg D	UJ	1.100	mg/kg D	UJ
Arsenic	1.100	mg/kg C	J	2.500	mg/kg D	-	2.800	mg/kg D	-
Barium	15.400	mg/kg C	J	54.200	mg/kg D	J	23.400	mg/kg D	-
Beryllium	0.490	mg/kg C	U	0.660	mg/kg D	U	0.430	mg/kg D	U
Cadmium	1.200	mg/kg C	U	1.700	mg/kg D	U	1.100	mg/kg D	U
Calcium	112000.000	mg/kg C	-	289000.000	mg/kg D	-	89600.000	mg/kg D	-
Chromium	4.300	mg/kg C	J	3.400	mg/kg D	J	4.800	mg/kg D	-
Cobalt	2.800	mg/kg C	J	3.300	mg/kg D	UJ	2.700	mg/kg D	-
Copper	9.300	mg/kg C	-	3.300	mg/kg D	U	8.400	mg/kg D	-
Cyanide	0.120	mg/kg C	U	0.190	mg/kg D	U	0.120	mg/kg D	U
Iron	7440.000	mg/kg C	-	4010.000	mg/kg D	-	11900.000	mg/kg D	-
Lead	6.100	mg/kg C	-	0.770	mg/kg D	-	5.900	mg/kg D	-
Magnesium	34200.000	mg/kg C	-	14200.000	mg/kg D	-	25900.000	mg/kg D	-
Manganese	285.000	mg/kg C	J	502.000	mg/kg D	J	293.000	mg/kg D	-
Mercury	0.080	mg/kg C	U	0.160	mg/kg D	U	0.090	mg/kg D	U
Molybdenum	2.500	mg/kg C	J	3.300	mg/kg D	U	3.800	mg/kg D	-
Nickel	7.000	mg/kg C	-	6.600	mg/kg D	U	7.700	mg/kg D	-
Potassium	789.000	mg/kg C	-	33.200	mg/kg D	U	1040.000	mg/kg D	-
Selenium	0.520	mg/kg C	-	0.700	mg/kg D	U	0.550	mg/kg D	-
Silicon	578.000	mg/kg C	J	3390.000	mg/kg D	J	670.000	mg/kg D	J
Silver	2.500	mg/kg C	U	3.300	mg/kg D	U	2.900	mg/kg D	-
Sodium	160.000	mg/kg C	-	228.000	mg/kg D	-	150.000	mg/kg D	-
Thallium	0.490	mg/kg C	U	0.700	mg/kg D	U	0.410	mg/kg D	UJ
Vanadium	10.900	mg/kg C	J	5.000	mg/kg D	J	14.400	mg/kg D	-
Zinc	31.900	mg/kg C	J	16.900	mg/kg D	J	30.400	mg/kg D	-
Volatile Organics									
1,1,1-Trichloroethane	12.000	ug/kg C	U	19.000	ug/kg D	U	12.000	ug/kg D	U
1,1,2,2-Tetrachloroethane	12.000	ug/kg C	U	19.000	ug/kg D	U	12.000	ug/kg D	U
1,1,2-Trichloroethane	12.000	ug/kg C	U	19.000	ug/kg D	U	12.000	ug/kg D	U
1,1-Dichloroethane	12.000	ug/kg C	U	19.000	ug/kg D	U	12.000	ug/kg D	U
1,1-Dichloroethene	12.000	ug/kg C	U	19.000	ug/kg D	U	12.000	ug/kg D	U
1,2-Dichloroethane	12.000	ug/kg C	U	19.000	ug/kg D	UJ	12.000	ug/kg D	UJ
1,2-Dichloroethene	12.000	ug/kg C	U	19.000	ug/kg D	U	12.000	ug/kg D	U
1,2-Dichloropropane	12.000	ug/kg C	U	19.000	ug/kg D	U	12.000	ug/kg D	U
2-Butanone	12.000	ug/kg C	U	19.000	ug/kg D	U	12.000	ug/kg D	U
2-Hexanone	12.000	ug/kg C	U	19.000	ug/kg D	U	12.000	ug/kg D	U
4-Methyl-2-pentanone	12.000	ug/kg C	U	19.000	ug/kg D	U	12.000	ug/kg D	U
Acetone	12.000	ug/kg C	U	19.000	ug/kg D	U	5.000	ug/kg D	J
Benzene	12.000	ug/kg C	U	19.000	ug/kg D	U	12.000	ug/kg D	U

000254

TABLE D-6A
(Continued)

PHASE II - CHEMICAL PARAMETERS

BORING NUMBER	1962				1963				1963			
SAMPLE NUMBER	114607				114762				114766			
	12.5-14				2-4				13.5-15.5			
SAMPLING DATE	05/25/93				06/03/93				06/03/93			
CHEMICAL PARAMETERS	RESULTS	UNITS	L	VQ	RESULTS	UNITS	L	VQ	RESULTS	UNITS	L	VQ
Volatile Organics												
Bromodichloromethane	12.000	ug/kg	C	U	19.000	ug/kg	D	U	12.000	ug/kg	D	U
Bromoform	12.000	ug/kg	C	U	19.000	ug/kg	D	U	12.000	ug/kg	D	U
Bromomethane	12.000	ug/kg	C	U	19.000	ug/kg	D	U	12.000	ug/kg	D	U
Carbon Tetrachloride	12.000	ug/kg	C	U	19.000	ug/kg	D	U	12.000	ug/kg	D	U
Carbon disulfide	12.000	ug/kg	C	U	19.000	ug/kg	D	U	12.000	ug/kg	D	U
Chlorobenzene	12.000	ug/kg	C	U	19.000	ug/kg	D	U	12.000	ug/kg	D	U
Chloroethane	12.000	ug/kg	C	U	19.000	ug/kg	D	U	12.000	ug/kg	D	U
Chloroform	12.000	ug/kg	C	U	19.000	ug/kg	D	U	12.000	ug/kg	D	U
Chloromethane	12.000	ug/kg	C	U	19.000	ug/kg	D	U	12.000	ug/kg	D	U
Dibromochloromethane	12.000	ug/kg	C	U	19.000	ug/kg	D	U	12.000	ug/kg	D	U
Ethylbenzene	12.000	ug/kg	C	U	19.000	ug/kg	D	U	12.000	ug/kg	D	U
Methylene chloride	12.000	ug/kg	C	U	19.000	ug/kg	D	U	12.000	ug/kg	D	U
Styrene	12.000	ug/kg	C	U	19.000	ug/kg	D	U	12.000	ug/kg	D	U
Tetrachloroethene	12.000	ug/kg	C	U	19.000	ug/kg	D	U	12.000	ug/kg	D	U
Toluene	12.000	ug/kg	C	U	19.000	ug/kg	D	U	12.000	ug/kg	D	U
Trichloroethene	12.000	ug/kg	C	U	19.000	ug/kg	D	U	12.000	ug/kg	D	U
Vinyl Acetate	12.000	ug/kg	C	U	19.000	ug/kg	D	U	12.000	ug/kg	D	U
Vinyl chloride	12.000	ug/kg	C	U	19.000	ug/kg	D	U	12.000	ug/kg	D	U
Xylenes, Total	12.000	ug/kg	C	U	19.000	ug/kg	D	U	12.000	ug/kg	D	U
cis-1,3-Dichloropropene	12.000	ug/kg	C	U	19.000	ug/kg	D	U	12.000	ug/kg	D	U
trans-1,3-Dichloropropene	12.000	ug/kg	C	U	19.000	ug/kg	D	U	12.000	ug/kg	D	U
Semivolatile Organics												
1,2,4-Trichlorobenzene	410.000	ug/kg	C	U	620.000	ug/kg	D	U	390.000	ug/kg	D	R
1,2-Dichlorobenzene	410.000	ug/kg	C	U	620.000	ug/kg	D	U	390.000	ug/kg	D	R
1,3-Dichlorobenzene	410.000	ug/kg	C	U	620.000	ug/kg	D	U	390.000	ug/kg	D	R
1,4-Dichlorobenzene	410.000	ug/kg	C	U	620.000	ug/kg	D	U	390.000	ug/kg	D	R
2,4,5-Trichlorophenol	990.000	ug/kg	C	U	1500.000	ug/kg	D	U	960.000	ug/kg	D	R
2,4,6-Trichlorophenol	410.000	ug/kg	C	U	620.000	ug/kg	D	U	390.000	ug/kg	D	R
2,4-Dichlorophenol	410.000	ug/kg	C	U	620.000	ug/kg	D	U	390.000	ug/kg	D	R
2,4-Dimethylphenol	410.000	ug/kg	C	U	620.000	ug/kg	D	U	390.000	ug/kg	D	R
2,4-Dinitrophenol	990.000	ug/kg	C	UJ	1500.000	ug/kg	D	UJ	960.000	ug/kg	D	R
2,4-Dinitrotoluene	410.000	ug/kg	C	U	620.000	ug/kg	D	U	390.000	ug/kg	D	R
2,6-Dinitrotoluene	410.000	ug/kg	C	U	620.000	ug/kg	D	U	390.000	ug/kg	D	R
2-Benzyl-4-chlorophenol	410.000	ug/kg	C	UJ	620.000	ug/kg	D	UJ	390.000	ug/kg	D	R
2-Chloronaphthalene	410.000	ug/kg	C	U	620.000	ug/kg	D	U	390.000	ug/kg	D	UJ
2-Chlorophenol	410.000	ug/kg	C	U	620.000	ug/kg	D	U	390.000	ug/kg	D	R
2-Methylnaphthalene	410.000	ug/kg	C	U	620.000	ug/kg	D	U	390.000	ug/kg	D	UJ
2-Methylphenol	410.000	ug/kg	C	U	620.000	ug/kg	D	U	390.000	ug/kg	D	R
2-Nitroaniline	990.000	ug/kg	C	U	1500.000	ug/kg	D	U	960.000	ug/kg	D	R
2-Nitrophenol	410.000	ug/kg	C	U	620.000	ug/kg	D	U	390.000	ug/kg	D	R

TABLE D-6A
(Continued)

PHASE II - CHEMICAL PARAMETERS

BORING NUMBER	1962			1963			1963		
SAMPLE NUMBER	114607			114762			114766		
	12.5-14			2-4			13.5-15.5		
SAMPLING DATE	05/25/93			06/03/93			06/03/93		
CHEMICAL PARAMETERS	RESULTS	UNITS	L VQ	RESULTS	UNITS	L VQ	RESULTS	UNITS	L VQ
Semivolatile Organics									
3,3'-Dichlorobenzidine	410.000	ug/kg	C U	620.000	ug/kg	D U	390.000	ug/kg	D R
3-Nitroaniline	990.000	ug/kg	C U	1500.000	ug/kg	D U	960.000	ug/kg	D R
4,6-Dinitro-2-methylphenol	990.000	ug/kg	C U	1500.000	ug/kg	D U	960.000	ug/kg	D R
4-Bromophenyl phenyl ether	410.000	ug/kg	C U	620.000	ug/kg	D U	390.000	ug/kg	D R
4-Chloro-3-methylphenol	410.000	ug/kg	C U	620.000	ug/kg	D U	390.000	ug/kg	D R
4-Chlorophenylphenyl ether	410.000	ug/kg	C U	620.000	ug/kg	D U	390.000	ug/kg	D R
4-Methylphenol	410.000	ug/kg	C U	620.000	ug/kg	D U	390.000	ug/kg	D R
4-Nitroaniline	990.000	ug/kg	C U	1500.000	ug/kg	D U	960.000	ug/kg	D R
4-Nitrophenol	990.000	ug/kg	C U	1500.000	ug/kg	D U	960.000	ug/kg	D R
Acenaphthene	410.000	ug/kg	C U	620.000	ug/kg	D U	390.000	ug/kg	D UJ
Acenaphthylene	410.000	ug/kg	C U	620.000	ug/kg	D U	390.000	ug/kg	D UJ
Anthracene	410.000	ug/kg	C U	620.000	ug/kg	D U	390.000	ug/kg	D UJ
Benzo(a)anthracene	410.000	ug/kg	C U	620.000	ug/kg	D U	390.000	ug/kg	D UJ
Benzo(a)pyrene	410.000	ug/kg	C U	620.000	ug/kg	D U	390.000	ug/kg	D UJ
Benzo(b)fluoranthene	410.000	ug/kg	C U	620.000	ug/kg	D U	390.000	ug/kg	D UJ
Benzo(g,h,i)perylene	410.000	ug/kg	C U	620.000	ug/kg	D UJ	390.000	ug/kg	D UJ
Benzo(k)fluoranthene	410.000	ug/kg	C U	620.000	ug/kg	D U	390.000	ug/kg	D UJ
Benzoic acid	2000.000	ug/kg	C UJ	3000.000	ug/kg	D U	1900.000	ug/kg	D R
Benzyl alcohol	410.000	ug/kg	C R	620.000	ug/kg	D R	390.000	ug/kg	D R
Butyl benzyl phthalate	410.000	ug/kg	C U	620.000	ug/kg	D U	390.000	ug/kg	D R
Carbazole	410.000	ug/kg	C U	620.000	ug/kg	D U	390.000	ug/kg	D UJ
Chrysene	410.000	ug/kg	C U	620.000	ug/kg	D U	390.000	ug/kg	D UJ
Di-n-butyl phthalate	2.000	ug/kg	C J	620.000	ug/kg	D U	390.000	ug/kg	D R
Di-n-octyl phthalate	410.000	ug/kg	C U	620.000	ug/kg	D UJ	390.000	ug/kg	D R
Dibenzo(a,h)anthracene	410.000	ug/kg	C U	620.000	ug/kg	D UJ	390.000	ug/kg	D UJ
Dibenzofuran	410.000	ug/kg	C U	620.000	ug/kg	D U	390.000	ug/kg	D R
Diethyl phthalate	410.000	ug/kg	C U	620.000	ug/kg	D U	390.000	ug/kg	D R
Dimethyl phthalate	410.000	ug/kg	C U	620.000	ug/kg	D U	390.000	ug/kg	D R
Fluoranthene	410.000	ug/kg	C U	620.000	ug/kg	D U	390.000	ug/kg	D UJ
Fluorene	410.000	ug/kg	C U	620.000	ug/kg	D U	390.000	ug/kg	D UJ
Hexachlorobenzene	410.000	ug/kg	C U	620.000	ug/kg	D U	390.000	ug/kg	D R
Hexachlorobutadiene	410.000	ug/kg	C U	620.000	ug/kg	D U	390.000	ug/kg	D R
Hexachlorocyclopentadiene	410.000	ug/kg	C U	620.000	ug/kg	D U	390.000	ug/kg	D R
Hexachloroethane	410.000	ug/kg	C U	620.000	ug/kg	D U	390.000	ug/kg	D R
Indeno(1,2,3-cd)pyrene	410.000	ug/kg	C U	620.000	ug/kg	D UJ	390.000	ug/kg	D UJ
Isophorone	410.000	ug/kg	C U	620.000	ug/kg	D U	390.000	ug/kg	D R
N-Nitroso-di-n-propylamine	410.000	ug/kg	C U	620.000	ug/kg	D U	790.000	ug/kg	D R
N-Nitrosodimethylamine	410.000	ug/kg	C U	620.000	ug/kg	D U	390.000	ug/kg	D R
N-Nitrosodiphenylamine	410.000	ug/kg	C U	620.000	ug/kg	D U	390.000	ug/kg	D R
Naphthalene	410.000	ug/kg	C U	620.000	ug/kg	D U	390.000	ug/kg	D UJ
Nitrobenzene	410.000	ug/kg	C U	620.000	ug/kg	D U	790.000	ug/kg	D R
Pentachlorophenol	990.000	ug/kg	C U	1500.000	ug/kg	D U	960.000	ug/kg	D R

TABLE D-6A
(Continued)

PHASE II - CHEMICAL PARAMETERS

BORING NUMBER	1962			1963			1963		
SAMPLE NUMBER	114607			114762			114766		
	12.5-14			2-4			13.5-15.5		
SAMPLING DATE	05/25/93			06/03/93			06/03/93		
CHEMICAL PARAMETERS	RESULTS	UNITS	L VQ	RESULTS	UNITS	L VQ	RESULTS	UNITS	L VQ
Semivolatile Organics									
Phenanthrene	410.000	ug/kg	C U	620.000	ug/kg	D U	390.000	ug/kg	D UJ
Phenol	410.000	ug/kg	C U	620.000	ug/kg	D U	390.000	ug/kg	D R
Pyrene	410.000	ug/kg	C U	620.000	ug/kg	D U	390.000	ug/kg	D UJ
Tributyl phosphate	410.000	ug/kg	C U	620.000	ug/kg	D U	390.000	ug/kg	D R
bis(2-Chloroethoxy)methane	410.000	ug/kg	C U	620.000	ug/kg	D U	390.000	ug/kg	D R
bis(2-Chloroethyl)ether	410.000	ug/kg	C U	620.000	ug/kg	D U	390.000	ug/kg	D R
bis(2-Chloroisopropyl) ether	410.000	ug/kg	C U	620.000	ug/kg	D U	390.000	ug/kg	D R
bis(2-Ethylhexyl) phthalate	2.000	ug/kg	C J	88.000	ug/kg	D J	390.000	ug/kg	D R
p-Chloroaniline	410.000	ug/kg	C U	620.000	ug/kg	D U	390.000	ug/kg	D R
Pesticide Organics/PCBs									
4,4'-DDD	4.100	ug/kg	C U	6.300	ug/kg	D UJ	3.900	ug/kg	D U
4,4'-DDE	4.100	ug/kg	C U	6.300	ug/kg	D UJ	3.900	ug/kg	D U
4,4'-DDT	4.100	ug/kg	C U	6.300	ug/kg	D UJ	3.900	ug/kg	D U
Aldrin	2.100	ug/kg	C U	3.200	ug/kg	D UJ	2.000	ug/kg	D U
Aroclor-1016	41.000	ug/kg	C U	63.000	ug/kg	D U	39.000	ug/kg	D U
Aroclor-1221	84.000	ug/kg	C U	130.000	ug/kg	D U	80.000	ug/kg	D U
Aroclor-1232	41.000	ug/kg	C U	63.000	ug/kg	D U	39.000	ug/kg	D U
Aroclor-1242	41.000	ug/kg	C U	63.000	ug/kg	D U	39.000	ug/kg	D U
Aroclor-1248	41.000	ug/kg	C U	63.000	ug/kg	D U	39.000	ug/kg	D U
Aroclor-1254	41.000	ug/kg	C U	63.000	ug/kg	D U	39.000	ug/kg	D U
Aroclor-1260	41.000	ug/kg	C U	63.000	ug/kg	D U	39.000	ug/kg	D U
Dieldrin	4.100	ug/kg	C U	6.300	ug/kg	D UJ	3.900	ug/kg	D U
Endosulfan II	4.100	ug/kg	C U	6.300	ug/kg	D UJ	3.900	ug/kg	D U
Endosulfan sulfate	4.100	ug/kg	C U	6.300	ug/kg	D UJ	3.900	ug/kg	D U
Endosulfan-I	2.100	ug/kg	C U	3.200	ug/kg	D UJ	2.000	ug/kg	D U
Endrin	4.100	ug/kg	C U	6.300	ug/kg	D UJ	3.900	ug/kg	D U
Endrin aldehyde	4.100	ug/kg	C UJ	6.300	ug/kg	D UJ	3.900	ug/kg	D UJ
Endrin ketone	4.100	ug/kg	C U	6.300	ug/kg	D UJ	3.900	ug/kg	D U
Heptachlor	2.100	ug/kg	C U	3.200	ug/kg	D UJ	2.000	ug/kg	D U
Heptachlor epoxide	2.100	ug/kg	C U	3.200	ug/kg	D UJ	2.000	ug/kg	D U
Methoxychlor	21.000	ug/kg	C U	32.000	ug/kg	D UJ	20.000	ug/kg	D U
Toxaphene	210.000	ug/kg	C U	320.000	ug/kg	D U	200.000	ug/kg	D U
alpha-BHC	2.100	ug/kg	C U	3.200	ug/kg	D UJ	2.000	ug/kg	D U
alpha-Chlordane	2.100	ug/kg	C U	3.200	ug/kg	D UJ	2.000	ug/kg	D U
beta-BHC	2.100	ug/kg	C U	3.200	ug/kg	D UJ	2.000	ug/kg	D U
delta-BHC	2.100	ug/kg	C UJ	3.200	ug/kg	D UJ	2.000	ug/kg	D UJ
gamma-BHC (Lindane)	2.100	ug/kg	C U	3.200	ug/kg	D UJ	2.000	ug/kg	D U
gamma-Chlordane	2.100	ug/kg	C U	3.200	ug/kg	D UJ	2.000	ug/kg	D U

TABLE D-6A
(Continued)

PHASE II - CHEMICAL PARAMETERS

BORING NUMBER	1963			1963			LSP-SS-03		
SAMPLE NUMBER	114874			114879			114469		
	17-18			18-18.5			0.5-1		
SAMPLING DATE	06/11/93			06/14/93			05/01/93		
CHEMICAL PARAMETERS	RESULTS	UNITS	L VQ	RESULTS	UNITS	L VQ	RESULTS	UNITS	L VQ
Inorganics									
Aluminum	8090.000	mg/kg	C -	NA			12700.000	mg/kg	C -
Antimony	1.000	mg/kg	C UJ	NA			0.360	mg/kg	C UJ
Arsenic	3.800	mg/kg	C J	NA			8.500	mg/kg	C J
Barium	53.100	mg/kg	C -	NA			104.000	mg/kg	C J
Beryllium	0.680	mg/kg	C -	NA			1.400	mg/kg	C -
Cadmium	1.000	mg/kg	C U	NA			1.300	mg/kg	C -
Calcium	107000.000	mg/kg	C -	NA			30100.000	mg/kg	C J
Chromium	9.200	mg/kg	C -	NA			18.000	mg/kg	C -
Cobalt	6.800	mg/kg	C -	NA			11.800	mg/kg	C -
Copper	16.400	mg/kg	C J	NA			23.900	mg/kg	C -
Cyanide	0.120	mg/kg	C U	NA			0.120	mg/kg	C UJ
Iron	17100.000	mg/kg	C -	NA			24300.000	mg/kg	C J
Lead	9.000	mg/kg	C J	NA			13.100	mg/kg	C J
Magnesium	37800.000	mg/kg	C -	NA			11200.000	mg/kg	C -
Manganese	439.000	mg/kg	C -	NA			572.000	mg/kg	C J
Mercury	0.110	mg/kg	C U	NA			0.120	mg/kg	C U
Molybdenum	5.200	mg/kg	C -	NA			1.900	mg/kg	C U
Nickel	17.600	mg/kg	C J	NA			22.200	mg/kg	C -
Potassium	1780.000	mg/kg	C -	NA			1090.000	mg/kg	C J
Selenium	0.400	mg/kg	C UJ	NA			0.240	mg/kg	C UJ
Silicon	789.000	mg/kg	C J	NA			950.000	mg/kg	C J
Silver	3.900	mg/kg	C -	NA			0.490	mg/kg	C U
Sodium	172.000	mg/kg	C -	NA			94.500	mg/kg	C -
Thallium	0.400	mg/kg	C U	NA			0.240	mg/kg	C U
Vanadium	18.500	mg/kg	C -	NA			28.800	mg/kg	C J
Zinc	46.300	mg/kg	C -	NA			57.500	mg/kg	C J
Volatile Organics									
1,1,1-Trichloroethane	NA			12.000	ug/kg	C U	12.000	ug/kg	C U
1,1,2,2-Tetrachloroethane	NA			12.000	ug/kg	C U	12.000	ug/kg	C U
1,1,2-Trichloroethane	NA			12.000	ug/kg	C U	12.000	ug/kg	C U
1,1-Dichloroethane	NA			12.000	ug/kg	C U	12.000	ug/kg	C U
1,1-Dichloroethene	NA			12.000	ug/kg	C U	12.000	ug/kg	C U
1,2-Dichloroethane	NA			12.000	ug/kg	C U	12.000	ug/kg	C U
1,2-Dichloroethene	NA			12.000	ug/kg	C U	12.000	ug/kg	C U
1,2-Dichloropropane	NA			12.000	ug/kg	C U	12.000	ug/kg	C U
2-Butanone	NA			2.000	ug/kg	C J	12.000	ug/kg	C U
2-Hexanone	NA			12.000	ug/kg	C U	12.000	ug/kg	C U
4-Methyl-2-pentanone	NA			12.000	ug/kg	C U	12.000	ug/kg	C U
Acetone	NA			10.000	ug/kg	C J	12.000	ug/kg	C -
Benzene	NA			12.000	ug/kg	C U	12.000	ug/kg	C U

TABLE D-6A
(Continued)

PHASE II - CHEMICAL PARAMETERS

BORING NUMBER	1963				1963				LSP-SS-03			
SAMPLE NUMBER	114874				114879				114469			
	17-18				18-18.5				0.5-1			
SAMPLING DATE	06/11/93				06/14/93				05/01/93			
CHEMICAL PARAMETERS	RESULTS	UNITS	L	VQ	RESULTS	UNITS	L	VQ	RESULTS	UNITS	L	VQ
Volatile Organics												
Bromodichloromethane	NA				12.000	ug/kg	C	U	12.000	ug/kg	C	U
Bromoform	NA				12.000	ug/kg	C	U	12.000	ug/kg	C	U
Bromomethane	NA				12.000	ug/kg	C	U	12.000	ug/kg	C	UJ
Carbon Tetrachloride	NA				12.000	ug/kg	C	U	12.000	ug/kg	C	U
Carbon disulfide	NA				12.000	ug/kg	C	U	12.000	ug/kg	C	U
Chlorobenzene	NA				12.000	ug/kg	C	U	12.000	ug/kg	C	U
Chloroethane	NA				12.000	ug/kg	C	U	12.000	ug/kg	C	UJ
Chloroform	NA				12.000	ug/kg	C	U	12.000	ug/kg	C	U
Chloromethane	NA				12.000	ug/kg	C	U	12.000	ug/kg	C	U
Dibromochloromethane	NA				12.000	ug/kg	C	U	12.000	ug/kg	C	U
Ethylbenzene	NA				12.000	ug/kg	C	U	12.000	ug/kg	C	U
Methylene chloride	NA				12.000	ug/kg	C	UJ	12.000	ug/kg	C	U
Styrene	NA				12.000	ug/kg	C	U	12.000	ug/kg	C	U
Tetrachloroethene	NA				12.000	ug/kg	C	U	12.000	ug/kg	C	U
Toluene	NA				12.000	ug/kg	C	U	12.000	ug/kg	C	U
Trichloroethene	NA				12.000	ug/kg	C	U	12.000	ug/kg	C	U
Vinyl Acetate	NA				12.000	ug/kg	C	U	NA			
Vinyl chloride	NA				12.000	ug/kg	C	U	12.000	ug/kg	C	U
Xylenes, Total	NA				12.000	ug/kg	C	U	12.000	ug/kg	C	U
cis-1,3-Dichloropropene	NA				12.000	ug/kg	C	U	12.000	ug/kg	C	U
trans-1,3-Dichloropropene	NA				12.000	ug/kg	C	U	12.000	ug/kg	C	U
Semivolatile Organics												
1,2,4-Trichlorobenzene	410.000	ug/kg	C	U	NA				400.000	ug/kg	C	UJ
1,2-Dichlorobenzene	410.000	ug/kg	C	U	NA				400.000	ug/kg	C	U
1,3-Dichlorobenzene	410.000	ug/kg	C	U	NA				400.000	ug/kg	C	U
1,4-Dichlorobenzene	410.000	ug/kg	C	U	NA				400.000	ug/kg	C	U
2,4,5-Trichlorophenol	1000.000	ug/kg	C	U	NA				970.000	ug/kg	C	U
2,4,6-Trichlorophenol	410.000	ug/kg	C	U	NA				400.000	ug/kg	C	U
2,4-Dichlorophenol	410.000	ug/kg	C	U	NA				400.000	ug/kg	C	U
2,4-Dimethylphenol	410.000	ug/kg	C	U	NA				400.000	ug/kg	C	U
2,4-Dinitrophenol	2000.000	ug/kg	C	U	NA				970.000	ug/kg	C	UJ
2,4-Dinitrotoluene	410.000	ug/kg	C	U	NA				400.000	ug/kg	C	U
2,6-Dinitrotoluene	410.000	ug/kg	C	U	NA				400.000	ug/kg	C	U
2-Benzyl-4-chlorophenol	410.000	ug/kg	C	U	NA				NA			
2-Chloronaphthalene	410.000	ug/kg	C	U	NA				400.000	ug/kg	C	U
2-Chlorophenol	410.000	ug/kg	C	U	NA				400.000	ug/kg	C	U
2-Methylnaphthalene	410.000	ug/kg	C	U	NA				400.000	ug/kg	C	U
2-Methylphenol	410.000	ug/kg	C	U	NA				400.000	ug/kg	C	UJ
2-Nitroaniline	1000.000	ug/kg	C	UJ	NA				970.000	ug/kg	C	U
2-Nitrophenol	410.000	ug/kg	C	U	NA				400.000	ug/kg	C	U

TABLE D-6A
(Continued)

PHASE II - CHEMICAL PARAMETERS

BORING NUMBER	1963				1963				LSP-SS-03			
SAMPLE NUMBER	114874				114879				114469			
	17-18				18-18.5				0.5-1			
SAMPLING DATE	06/11/93				06/14/93				05/01/93			
CHEMICAL PARAMETERS	RESULTS	UNITS	L	VQ	RESULTS	UNITS	L	VQ	RESULTS	UNITS	L	VQ
Semivolatile Organics												
3,3'-Dichlorobenzidine	410.000	ug/kg	C	UJ	NA				400.000	ug/kg	C	U
3-Nitroaniline	1000.000	ug/kg	C	U	NA				970.000	ug/kg	C	UJ
4,6-Dinitro-2-methylphenol	1000.000	ug/kg	C	U	NA				970.000	ug/kg	C	U
4-Bromophenyl phenyl ether	410.000	ug/kg	C	U	NA				400.000	ug/kg	C	U
4-Chloro-3-methylphenol	410.000	ug/kg	C	U	NA				400.000	ug/kg	C	U
4-Chlorophenylphenyl ether	410.000	ug/kg	C	U	NA				400.000	ug/kg	C	U
4-Methylphenol	410.000	ug/kg	C	U	NA				400.000	ug/kg	C	UJ
4-Nitroaniline	1000.000	ug/kg	C	UJ	NA				970.000	ug/kg	C	R
4-Nitrophenol	1000.000	ug/kg	C	U	NA				970.000	ug/kg	C	U
Acenaphthene	410.000	ug/kg	C	U	NA				400.000	ug/kg	C	U
Acenaphthylene	410.000	ug/kg	C	U	NA				400.000	ug/kg	C	U
Anthracene	410.000	ug/kg	C	U	NA				400.000	ug/kg	C	U
Benzo(a)anthracene	410.000	ug/kg	C	UJ	NA				400.000	ug/kg	C	U
Benzo(a)pyrene	410.000	ug/kg	C	UJ	NA				400.000	ug/kg	C	U
Benzo(b)fluoranthene	410.000	ug/kg	C	UJ	NA				400.000	ug/kg	C	U
Benzo(g,h,i)perylene	410.000	ug/kg	C	UJ	NA				400.000	ug/kg	C	U
Benzo(k)fluoranthene	410.000	ug/kg	C	UJ	NA				400.000	ug/kg	C	UJ
Benzoic acid	90.000	ug/kg	C	J	NA				1900.000	ug/kg	C	U
Benzyl alcohol	410.000	ug/kg	C	R	NA				400.000	ug/kg	C	U
Butyl benzyl phthalate	410.000	ug/kg	C	UJ	NA				400.000	ug/kg	C	U
Carbazole	410.000	ug/kg	C	U	NA				400.000	ug/kg	C	U
Chrysene	410.000	ug/kg	C	UJ	NA				400.000	ug/kg	C	U
Di-n-butyl phthalate	410.000	ug/kg	C	UJ	NA				400.000	ug/kg	C	U
Di-n-octyl phthalate	410.000	ug/kg	C	UJ	NA				400.000	ug/kg	C	U
Dibenzo(a,h)anthracene	410.000	ug/kg	C	UJ	NA				400.000	ug/kg	C	U
Dibenzofuran	410.000	ug/kg	C	U	NA				400.000	ug/kg	C	U
Diethyl phthalate	410.000	ug/kg	C	U	NA				400.000	ug/kg	C	UJ
Dimethyl phthalate	410.000	ug/kg	C	U	NA				400.000	ug/kg	C	U
Fluoranthene	410.000	ug/kg	C	U	NA				400.000	ug/kg	C	U
Fluorene	410.000	ug/kg	C	U	NA				400.000	ug/kg	C	U
Hexachlorobenzene	410.000	ug/kg	C	U	NA				400.000	ug/kg	C	U
Hexachlorobutadiene	410.000	ug/kg	C	UJ	NA				400.000	ug/kg	C	R
Hexachlorocyclopentadiene	410.000	ug/kg	C	U	NA				400.000	ug/kg	C	U
Hexachloroethane	410.000	ug/kg	C	U	NA				400.000	ug/kg	C	U
Indeno(1,2,3-cd)pyrene	410.000	ug/kg	C	UJ	NA				400.000	ug/kg	C	U
Isophorone	410.000	ug/kg	C	U	NA				400.000	ug/kg	C	U
N-Nitroso-di-n-propylamine	410.000	ug/kg	C	UJ	NA				400.000	ug/kg	C	U
N-Nitrosodimethylamine	410.000	ug/kg	C	UJ	NA				NA			
N-Nitrosodiphenylamine	410.000	ug/kg	C	U	NA				400.000	ug/kg	C	U
Naphthalene	410.000	ug/kg	C	U	NA				400.000	ug/kg	C	U
Nitrobenzene	410.000	ug/kg	C	U	NA				400.000	ug/kg	C	U
Pentachlorophenol	1000.000	ug/kg	C	U	NA				970.000	ug/kg	C	U

000757

TABLE D-6A
(Continued)

PHASE II - CHEMICAL PARAMETERS

BORING NUMBER	1963				1963				LSP-SS-03			
SAMPLE NUMBER	114874				114879				114469			
	17-18				18-18.5				0.5-1			
SAMPLING DATE	06/11/93				06/14/93				05/01/93			
CHEMICAL PARAMETERS	RESULTS	UNITS	L	VQ	RESULTS	UNITS	L	VQ	RESULTS	UNITS	L	VQ
Semivolatile Organics												
Phenanthrene	410.000	ug/kg	C	U	NA				400.000	ug/kg	C	U
Phenol	410.000	ug/kg	C	U	NA				400.000	ug/kg	C	U
Pyrene	410.000	ug/kg	C	UJ	NA				400.000	ug/kg	C	U
Tributyl phosphate	410.000	ug/kg	C	U	NA				NA			
bis(2-Chloroethoxy)methane	410.000	ug/kg	C	U	NA				400.000	ug/kg	C	U
bis(2-Chloroethyl)ether	410.000	ug/kg	C	U	NA				400.000	ug/kg	C	U
bis(2-Chloroisopropyl) ether	410.000	ug/kg	C	U	NA				400.000	ug/kg	C	UJ
bis(2-Ethylhexyl) phthalate	93.000	ug/kg	C	J	NA				140.000	ug/kg	C	J
p-Chloroaniline	410.000	ug/kg	C	U	NA				400.000	ug/kg	C	U
Pesticide Organics/PCBs												
4,4'-DDD	4.100	ug/kg	C	U	NA				4.000	ug/kg	C	U
4,4'-DDE	4.100	ug/kg	C	U	NA				4.000	ug/kg	C	U
4,4'-DDT	4.100	ug/kg	C	UJ	NA				4.000	ug/kg	C	U
Aldrin	2.100	ug/kg	C	U	NA				2.100	ug/kg	C	U
Aroclor-1016	41.000	ug/kg	C	U	NA				40.000	ug/kg	C	UJ
Aroclor-1221	83.000	ug/kg	C	U	NA				81.000	ug/kg	C	UJ
Aroclor-1232	41.000	ug/kg	C	U	NA				40.000	ug/kg	C	UJ
Aroclor-1242	41.000	ug/kg	C	U	NA				40.000	ug/kg	C	UJ
Aroclor-1248	41.000	ug/kg	C	U	NA				40.000	ug/kg	C	UJ
Aroclor-1254	41.000	ug/kg	C	U	NA				40.000	ug/kg	C	UJ
Aroclor-1260	41.000	ug/kg	C	U	NA				40.000	ug/kg	C	UJ
Dieldrin	4.100	ug/kg	C	U	NA				4.000	ug/kg	C	U
Endosulfan II	4.100	ug/kg	C	U	NA				4.000	ug/kg	C	U
Endosulfan sulfate	4.100	ug/kg	C	U	NA				4.000	ug/kg	C	U
Endosulfan-I	2.100	ug/kg	C	U	NA				2.100	ug/kg	C	U
Endrin	4.100	ug/kg	C	U	NA				4.000	ug/kg	C	U
Endrin aldehyde	4.100	ug/kg	C	U	NA				4.000	ug/kg	C	U
Endrin ketone	4.100	ug/kg	C	U	NA				4.000	ug/kg	C	U
Heptachlor	2.100	ug/kg	C	U	NA				2.100	ug/kg	C	U
Heptachlor epoxide	2.100	ug/kg	C	U	NA				2.100	ug/kg	C	U
Methoxychlor	21.000	ug/kg	C	U	NA				21.000	ug/kg	C	UJ
Toxaphene	210.000	ug/kg	C	U	NA				210.000	ug/kg	C	UJ
alpha-BHC	2.100	ug/kg	C	U	NA				2.100	ug/kg	C	U
alpha-Chlordane	2.100	ug/kg	C	U	NA				2.100	ug/kg	C	U
beta-BHC	2.100	ug/kg	C	U	NA				2.100	ug/kg	C	U
delta-BHC	2.100	ug/kg	C	U	NA				2.100	ug/kg	C	U
gamma-BHC (Lindane)	2.100	ug/kg	C	U	NA				2.100	ug/kg	C	U
gamma-Chlordane	2.100	ug/kg	C	U	NA				2.100	ug/kg	C	U

TABLE D-6A
(Continued)

PHASE II - CHEMICAL PARAMETERS

BORING NUMBER	LSP-SS-04			LSP-SS-07			LSP-SS-08		
SAMPLE NUMBER	114476			114479			114490		
	0.5-1			0.5-1			0.5-1		
SAMPLING DATE	05/02/93			05/02/93			05/03/93		
CHEMICAL PARAMETERS	RESULTS	UNITS	L VQ	RESULTS	UNITS	L VQ	RESULTS	UNITS	L VQ
Inorganics									
Aluminum	14300.000	mg/kg	C -	9870.000	mg/kg	D -	13000.000	mg/kg	C -
Antimony	0.330	mg/kg	C UJ	0.290	mg/kg	D R	0.280	mg/kg	C UJ
Arsenic	7.900	mg/kg	C J	8.700	mg/kg	D J	7.800	mg/kg	C J
Barium	114.000	mg/kg	C J	91.400	mg/kg	D -	125.000	mg/kg	C J
Beryllium	1.600	mg/kg	C -	1.500	mg/kg	D -	2.100	mg/kg	C -
Cadmium	1.500	mg/kg	C -	0.920	mg/kg	D -	1.100	mg/kg	C -
Calcium	36700.000	mg/kg	C J	56700.000	mg/kg	D J	11400.000	mg/kg	C J
Chromium	18.900	mg/kg	C -	13.400	mg/kg	D -	17.900	mg/kg	C -
Cobalt	9.900	mg/kg	C -	11.800	mg/kg	D -	11.900	mg/kg	C -
Copper	21.300	mg/kg	C -	19.400	mg/kg	D -	24.000	mg/kg	C -
Cyanide	0.120	mg/kg	C UJ	0.120	mg/kg	D U	0.120	mg/kg	C UJ
Iron	25300.000	mg/kg	C J	19500.000	mg/kg	D -	25500.000	mg/kg	C J
Lead	12.300	mg/kg	C J	16.600	mg/kg	D J	13.600	mg/kg	C J
Magnesium	12500.000	mg/kg	C -	13900.000	mg/kg	D -	6120.000	mg/kg	C -
Manganese	610.000	mg/kg	C J	710.000	mg/kg	D -	687.000	mg/kg	C J
Mercury	0.110	mg/kg	C U	0.120	mg/kg	D U	0.120	mg/kg	C U
Molybdenum	1.300	mg/kg	C U	1.400	mg/kg	D -	1.500	mg/kg	C U
Nickel	27.500	mg/kg	C -	20.600	mg/kg	D -	32.900	mg/kg	C -
Potassium	1270.000	mg/kg	C J	880.000	mg/kg	D J	739.000	mg/kg	C J
Selenium	0.230	mg/kg	C UJ	0.240	mg/kg	D UJ	0.230	mg/kg	C UJ
Silicon	974.000	mg/kg	C J	844.000	mg/kg	D -	891.000	mg/kg	C J
Silver	0.470	mg/kg	C U	0.480	mg/kg	D U	0.470	mg/kg	C U
Sodium	129.000	mg/kg	C -	121.000	mg/kg	D J	76.800	mg/kg	C -
Thallium	0.230	mg/kg	C U	0.240	mg/kg	D U	0.230	mg/kg	C U
Vanadium	29.400	mg/kg	C J	25.900	mg/kg	D J	26.200	mg/kg	C J
Zinc	60.400	mg/kg	C J	51.500	mg/kg	D -	62.700	mg/kg	C J
Volatile Organics									
1,1,1-Trichloroethane	12.000	ug/kg	C U	12.000	ug/kg	D U	12.000	ug/kg	C U
1,1,2,2-Tetrachloroethane	12.000	ug/kg	C U	12.000	ug/kg	D U	12.000	ug/kg	C U
1,1,2-Trichloroethane	12.000	ug/kg	C U	12.000	ug/kg	D U	12.000	ug/kg	C U
1,1-Dichloroethane	12.000	ug/kg	C U	12.000	ug/kg	D U	12.000	ug/kg	C U
1,1-Dichloroethene	12.000	ug/kg	C U	12.000	ug/kg	D U	12.000	ug/kg	C U
1,2-Dichloroethane	12.000	ug/kg	C U	12.000	ug/kg	D U	12.000	ug/kg	C U
1,2-Dichloroethene	12.000	ug/kg	C U	12.000	ug/kg	D U	12.000	ug/kg	C U
1,2-Dichloropropane	12.000	ug/kg	C U	12.000	ug/kg	D U	12.000	ug/kg	C U
2-Butanone	12.000	ug/kg	C U	12.000	ug/kg	D U	12.000	ug/kg	C U
2-Hexanone	12.000	ug/kg	C U	12.000	ug/kg	D U	12.000	ug/kg	C U
4-Methyl-2-pentanone	12.000	ug/kg	C U	12.000	ug/kg	D U	12.000	ug/kg	C U
Acetone	12.000	ug/kg	C U	12.000	ug/kg	D U	12.000	ug/kg	C U
Benzene	12.000	ug/kg	C U	12.000	ug/kg	D U	12.000	ug/kg	C U

000759

TABLE D-6A
(Continued)

PHASE II - CHEMICAL PARAMETERS

BORING NUMBER	LSP-SS-04				LSP-SS-07				LSP-SS-08			
SAMPLE NUMBER	114476				114479				114490			
	0.5-1				0.5-1				0.5-1			
SAMPLING DATE	05/02/93				05/02/93				05/03/93			
CHEMICAL PARAMETERS	RESULTS	UNITS	L	VQ	RESULTS	UNITS	L	VQ	RESULTS	UNITS	L	VQ
Volatile Organics												
Bromodichloromethane	12.000	ug/kg	C	U	12.000	ug/kg	D	U	12.000	ug/kg	C	U
Bromoform	12.000	ug/kg	C	U	12.000	ug/kg	D	U	12.000	ug/kg	C	U
Bromomethane	12.000	ug/kg	C	UJ	12.000	ug/kg	D	U	12.000	ug/kg	C	U
Carbon Tetrachloride	12.000	ug/kg	C	U	12.000	ug/kg	D	U	12.000	ug/kg	C	U
Carbon disulfide	12.000	ug/kg	C	U	12.000	ug/kg	D	U	12.000	ug/kg	C	U
Chlorobenzene	12.000	ug/kg	C	U	12.000	ug/kg	D	U	12.000	ug/kg	C	U
Chloroethane	12.000	ug/kg	C	UJ	12.000	ug/kg	D	UJ	12.000	ug/kg	C	UJ
Chloroform	12.000	ug/kg	C	U	12.000	ug/kg	D	U	12.000	ug/kg	C	U
Chloromethane	12.000	ug/kg	C	U	12.000	ug/kg	D	U	12.000	ug/kg	C	U
Dibromochloromethane	12.000	ug/kg	C	U	12.000	ug/kg	D	U	12.000	ug/kg	C	U
Ethylbenzene	12.000	ug/kg	C	U	12.000	ug/kg	D	U	12.000	ug/kg	C	U
Methylene chloride	12.000	ug/kg	C	U	12.000	ug/kg	D	U	12.000	ug/kg	C	U
Styrene	12.000	ug/kg	C	U	12.000	ug/kg	D	U	12.000	ug/kg	C	U
Tetrachloroethene	12.000	ug/kg	C	U	12.000	ug/kg	D	U	12.000	ug/kg	C	U
Toluene	2.000	ug/kg	C	J	2.000	ug/kg	D	J	11.000	ug/kg	C	J
Trichloroethene	12.000	ug/kg	C	U	12.000	ug/kg	D	U	12.000	ug/kg	C	U
Vinyl chloride	12.000	ug/kg	C	U	12.000	ug/kg	D	U	12.000	ug/kg	C	U
Xylenes, Total	12.000	ug/kg	C	U	12.000	ug/kg	D	U	12.000	ug/kg	C	U
cis-1,3-Dichloropropene	12.000	ug/kg	C	U	12.000	ug/kg	D	U	12.000	ug/kg	C	U
trans-1,3-Dichloropropene	12.000	ug/kg	C	U	12.000	ug/kg	D	U	12.000	ug/kg	C	U
Semivolatile Organics												
1,2,4-Trichlorobenzene	400.000	ug/kg	C	UJ	400.000	ug/kg	D	U	400.000	ug/kg	C	UJ
1,2-Dichlorobenzene	400.000	ug/kg	C	U	400.000	ug/kg	D	U	400.000	ug/kg	C	U
1,3-Dichlorobenzene	400.000	ug/kg	C	U	400.000	ug/kg	D	U	400.000	ug/kg	C	U
1,4-Dichlorobenzene	400.000	ug/kg	C	U	400.000	ug/kg	D	U	400.000	ug/kg	C	U
2,4,5-Trichlorophenol	970.000	ug/kg	C	U	970.000	ug/kg	D	U	960.000	ug/kg	C	U
2,4,6-Trichlorophenol	400.000	ug/kg	C	U	400.000	ug/kg	D	U	400.000	ug/kg	C	U
2,4-Dichlorophenol	400.000	ug/kg	C	U	400.000	ug/kg	D	U	400.000	ug/kg	C	U
2,4-Dimethylphenol	400.000	ug/kg	C	U	400.000	ug/kg	D	U	400.000	ug/kg	C	U
2,4-Dinitrophenol	970.000	ug/kg	C	UJ	970.000	ug/kg	D	U	960.000	ug/kg	C	UJ
2,4-Dinitrotoluene	400.000	ug/kg	C	U	400.000	ug/kg	D	U	400.000	ug/kg	C	U
2,6-Dinitrotoluene	400.000	ug/kg	C	U	400.000	ug/kg	D	U	400.000	ug/kg	C	U
2-Chloronaphthalene	400.000	ug/kg	C	U	400.000	ug/kg	D	U	400.000	ug/kg	C	U
2-Chlorophenol	400.000	ug/kg	C	U	400.000	ug/kg	D	U	400.000	ug/kg	C	U
2-Methylnaphthalene	400.000	ug/kg	C	U	400.000	ug/kg	D	U	400.000	ug/kg	C	U
2-Methylphenol	400.000	ug/kg	C	UJ	400.000	ug/kg	D	U	400.000	ug/kg	C	UJ
2-Nitroaniline	970.000	ug/kg	C	U	970.000	ug/kg	D	U	960.000	ug/kg	C	U
2-Nitrophenol	400.000	ug/kg	C	U	400.000	ug/kg	D	U	400.000	ug/kg	C	U
3,3'-Dichlorobenzidine	400.000	ug/kg	C	U	400.000	ug/kg	D	U	400.000	ug/kg	C	U
3-Nitroaniline	970.000	ug/kg	C	UJ	970.000	ug/kg	D	U	960.000	ug/kg	C	UJ

TABLE D-6A
(Continued)

PHASE II - CHEMICAL PARAMETERS

BORING NUMBER	LSP-SS-04				LSP-SS-07				LSP-SS-08			
SAMPLE NUMBER	114476				114479				114490			
	0.5-1				0.5-1				0.5-1			
SAMPLING DATE	05/02/93				05/02/93				05/03/93			
CHEMICAL PARAMETERS	RESULTS	UNITS	L	VQ	RESULTS	UNITS	L	VQ	RESULTS	UNITS	L	VQ
Semivolatile Organics												
4,6-Dinitro-2-methylphenol	970.000	ug/kg	C	U	970.000	ug/kg	D	U	960.000	ug/kg	C	U
4-Bromophenyl phenyl ether	400.000	ug/kg	C	U	400.000	ug/kg	D	U	400.000	ug/kg	C	U
4-Chloro-3-methylphenol	400.000	ug/kg	C	U	400.000	ug/kg	D	U	400.000	ug/kg	C	U
4-Chlorophenylphenyl ether	400.000	ug/kg	C	U	400.000	ug/kg	D	U	400.000	ug/kg	C	U
4-Methylphenol	400.000	ug/kg	C	UJ	400.000	ug/kg	D	U	400.000	ug/kg	C	UJ
4-Nitroaniline	970.000	ug/kg	C	R	970.000	ug/kg	D	U	960.000	ug/kg	C	R
4-Nitrophenol	970.000	ug/kg	C	U	970.000	ug/kg	D	U	960.000	ug/kg	C	U
Acenaphthene	400.000	ug/kg	C	U	400.000	ug/kg	D	U	400.000	ug/kg	C	U
Acenaphthylene	400.000	ug/kg	C	U	400.000	ug/kg	D	U	400.000	ug/kg	C	U
Anthracene	400.000	ug/kg	C	U	400.000	ug/kg	D	U	400.000	ug/kg	C	U
Benzo(a)anthracene	400.000	ug/kg	C	U	400.000	ug/kg	D	U	400.000	ug/kg	C	U
Benzo(a)pyrene	400.000	ug/kg	C	U	400.000	ug/kg	D	U	400.000	ug/kg	C	U
Benzo(b)fluoranthene	400.000	ug/kg	C	U	400.000	ug/kg	D	U	400.000	ug/kg	C	U
Benzo(g,h,i)perylene	400.000	ug/kg	C	U	400.000	ug/kg	D	U	400.000	ug/kg	C	U
Benzo(k)fluoranthene	400.000	ug/kg	C	UJ	400.000	ug/kg	D	U	400.000	ug/kg	C	UJ
Benzoic acid	1900.000	ug/kg	C	U	1900.000	ug/kg	D	U	1900.000	ug/kg	C	U
Benzyl alcohol	400.000	ug/kg	C	U	400.000	ug/kg	D	U	400.000	ug/kg	C	U
Butyl benzyl phthalate	400.000	ug/kg	C	U	400.000	ug/kg	D	U	400.000	ug/kg	C	U
Carbazole	400.000	ug/kg	C	U	400.000	ug/kg	D	U	400.000	ug/kg	C	U
Chrysene	400.000	ug/kg	C	U	400.000	ug/kg	D	U	400.000	ug/kg	C	U
Di-n-butyl phthalate	400.000	ug/kg	C	U	400.000	ug/kg	D	U	400.000	ug/kg	C	U
Di-n-octyl phthalate	400.000	ug/kg	C	U	400.000	ug/kg	D	U	400.000	ug/kg	C	U
Dibenzo(a,h)anthracene	400.000	ug/kg	C	U	400.000	ug/kg	D	U	400.000	ug/kg	C	U
Dibenzofuran	400.000	ug/kg	C	U	400.000	ug/kg	D	U	400.000	ug/kg	C	U
Diethyl phthalate	400.000	ug/kg	C	UJ	400.000	ug/kg	D	U	400.000	ug/kg	C	UJ
Dimethyl phthalate	400.000	ug/kg	C	U	400.000	ug/kg	D	U	400.000	ug/kg	C	U
Fluoranthene	400.000	ug/kg	C	U	400.000	ug/kg	D	U	400.000	ug/kg	C	U
Fluorene	400.000	ug/kg	C	U	400.000	ug/kg	D	U	400.000	ug/kg	C	U
Hexachlorobenzene	400.000	ug/kg	C	U	400.000	ug/kg	D	U	400.000	ug/kg	C	U
Hexachlorobutadiene	400.000	ug/kg	C	R	400.000	ug/kg	D	U	400.000	ug/kg	C	R
Hexachlorocyclopentadiene	400.000	ug/kg	C	U	400.000	ug/kg	D	U	400.000	ug/kg	C	U
Hexachloroethane	400.000	ug/kg	C	U	400.000	ug/kg	D	U	400.000	ug/kg	C	U
Indeno(1,2,3-cd)pyrene	400.000	ug/kg	C	U	400.000	ug/kg	D	U	400.000	ug/kg	C	U
Isophorone	400.000	ug/kg	C	U	400.000	ug/kg	D	U	400.000	ug/kg	C	U
N-Nitroso-di-n-propylamine	400.000	ug/kg	C	U	400.000	ug/kg	D	U	400.000	ug/kg	C	U
N-Nitrosodiphenylamine	400.000	ug/kg	C	U	400.000	ug/kg	D	U	400.000	ug/kg	C	U
Naphthalene	400.000	ug/kg	C	U	400.000	ug/kg	D	U	400.000	ug/kg	C	U
Nitrobenzene	400.000	ug/kg	C	U	400.000	ug/kg	D	U	400.000	ug/kg	C	U
Pentachlorophenol	970.000	ug/kg	C	U	970.000	ug/kg	D	U	960.000	ug/kg	C	U
Phenanthrene	400.000	ug/kg	C	U	400.000	ug/kg	D	U	400.000	ug/kg	C	U
Phenol	400.000	ug/kg	C	U	400.000	ug/kg	D	U	400.000	ug/kg	C	U
Pyrene	400.000	ug/kg	C	U	400.000	ug/kg	D	U	400.000	ug/kg	C	U

TABLE D-6A
(Continued)

PHASE II - CHEMICAL PARAMETERS

BORING NUMBER	LSP-SS-04				LSP-SS-07				LSP-SS-08			
SAMPLE NUMBER	114476				114479				114490			
	0.5-1				0.5-1				0.5-1			
SAMPLING DATE	05/02/93				05/02/93				05/03/93			
CHEMICAL PARAMETERS	RESULTS	UNITS	L	VQ	RESULTS	UNITS	L	VQ	RESULTS	UNITS	L	VQ
Semivolatile Organics												
bis(2-Chloroethoxy)methane	400.000	ug/kg	C	U	400.000	ug/kg	D	U	400.000	ug/kg	C	U
bis(2-Chloroethyl)ether	400.000	ug/kg	C	U	400.000	ug/kg	D	U	400.000	ug/kg	C	U
bis(2-Chloroisopropyl) ether	400.000	ug/kg	C	UJ	400.000	ug/kg	D	U	400.000	ug/kg	C	UJ
bis(2-Ethylhexyl) phthalate	580.000	ug/kg	C	-	4800.000	ug/kg	D	-	230.000	ug/kg	C	J
p-Chloroaniline	400.000	ug/kg	C	U	400.000	ug/kg	D	U	400.000	ug/kg	C	U
Pesticide Organics/PCBs												
4,4'-DDD	4.000	ug/kg	C	U	4.000	ug/kg	D	U	3.900	ug/kg	C	U
4,4'-DDE	4.000	ug/kg	C	U	4.000	ug/kg	D	U	3.900	ug/kg	C	U
4,4'-DDT	4.000	ug/kg	C	U	4.000	ug/kg	D	U	3.900	ug/kg	C	U
Aldrin	2.100	ug/kg	C	U	2.100	ug/kg	D	U	2.000	ug/kg	C	U
Aroclor-1016	40.000	ug/kg	C	UJ	40.000	ug/kg	D	UJ	39.000	ug/kg	C	U
Aroclor-1221	82.000	ug/kg	C	UJ	82.000	ug/kg	D	UJ	80.000	ug/kg	C	U
Aroclor-1232	40.000	ug/kg	C	UJ	40.000	ug/kg	D	UJ	39.000	ug/kg	C	U
Aroclor-1242	40.000	ug/kg	C	UJ	40.000	ug/kg	D	UJ	39.000	ug/kg	C	U
Aroclor-1248	40.000	ug/kg	C	UJ	40.000	ug/kg	D	UJ	39.000	ug/kg	C	U
Aroclor-1254	40.000	ug/kg	C	UJ	40.000	ug/kg	D	UJ	39.000	ug/kg	C	U
Aroclor-1260	40.000	ug/kg	C	UJ	40.000	ug/kg	D	UJ	39.000	ug/kg	C	U
Dieldrin	4.000	ug/kg	C	U	4.000	ug/kg	D	U	3.900	ug/kg	C	U
Endosulfan II	4.000	ug/kg	C	U	4.000	ug/kg	D	U	3.900	ug/kg	C	U
Endosulfan sulfate	4.000	ug/kg	C	U	4.000	ug/kg	D	U	3.900	ug/kg	C	U
Endosulfan-I	2.100	ug/kg	C	U	2.100	ug/kg	D	U	2.000	ug/kg	C	U
Endrin	4.000	ug/kg	C	U	4.000	ug/kg	D	U	3.900	ug/kg	C	U
Endrin aldehyde	4.000	ug/kg	C	U	4.000	ug/kg	D	U	3.900	ug/kg	C	U
Endrin ketone	4.000	ug/kg	C	U	4.000	ug/kg	D	U	3.900	ug/kg	C	U
Heptachlor	2.100	ug/kg	C	U	2.100	ug/kg	D	U	2.000	ug/kg	C	U
Heptachlor epoxide	2.100	ug/kg	C	U	2.100	ug/kg	D	U	2.000	ug/kg	C	U
Methoxychlor	21.000	ug/kg	C	UJ	21.000	ug/kg	D	U	20.000	ug/kg	C	UJ
Toxaphene	210.000	ug/kg	C	UJ	210.000	ug/kg	D	UJ	200.000	ug/kg	C	U
alpha-BHC	2.100	ug/kg	C	U	2.100	ug/kg	D	U	2.000	ug/kg	C	U
alpha-Chlordane	2.100	ug/kg	C	U	2.100	ug/kg	D	U	2.000	ug/kg	C	U
beta-BHC	2.100	ug/kg	C	U	2.100	ug/kg	D	U	2.000	ug/kg	C	U
delta-BHC	2.100	ug/kg	C	U	2.100	ug/kg	D	U	2.000	ug/kg	C	U
gamma-BHC (Lindane)	2.100	ug/kg	C	U	2.100	ug/kg	D	U	2.000	ug/kg	C	U
gamma-Chlordane	2.100	ug/kg	C	U	2.100	ug/kg	D	U	2.000	ug/kg	C	U

TABLE D-6A
(Continued)

PHASE II - CHEMICAL PARAMETERS

BORING NUMBER	LSP-SS-11			LSP-SS-12			LSP-SB-02		
SAMPLE NUMBER	114500			114503			114508		
	0.5-1			0.5-1			0.5-1		
SAMPLING DATE	05/04/93			05/04/93			05/05/93		
CHEMICAL PARAMETERS	RESULTS	UNITS	L VQ	RESULTS	UNITS	L VQ	RESULTS	UNITS	L VQ
Inorganics									
Aluminum	12200.000	mg/kg	C -	11900.000	mg/kg	C -	17600.000	mg/kg	C -
Antimony	0.870	mg/kg	C UJ	0.670	mg/kg	C UJ	0.830	mg/kg	C UJ
Arsenic	6.600	mg/kg	C -	5.100	mg/kg	C -	8.100	mg/kg	C -
Barium	84.900	mg/kg	C -	84.200	mg/kg	C -	129.000	mg/kg	C -
Beryllium	1.600	mg/kg	C -	1.800	mg/kg	C -	1.800	mg/kg	C -
Cadmium	1.000	mg/kg	C -	1.300	mg/kg	C -	1.600	mg/kg	C -
Calcium	73400.000	mg/kg	C -	90200.000	mg/kg	C -	22900.000	mg/kg	C -
Chromium	15.800	mg/kg	C -	14.700	mg/kg	C -	22.100	mg/kg	C -
Cobalt	9.200	mg/kg	C -	8.000	mg/kg	C -	12.900	mg/kg	C -
Copper	21.400	mg/kg	C J	17.400	mg/kg	C J	24.500	mg/kg	C J
Cyanide	0.120	mg/kg	C R	0.120	mg/kg	C R	0.120	mg/kg	C R
Iron	20400.000	mg/kg	C -	17600.000	mg/kg	C -	27900.000	mg/kg	C -
Lead	14.500	mg/kg	C J	11.200	mg/kg	C J	14.700	mg/kg	C J
Magnesium	20200.000	mg/kg	C -	26000.000	mg/kg	C -	9450.000	mg/kg	C -
Manganese	576.000	mg/kg	C -	571.000	mg/kg	C -	705.000	mg/kg	C -
Mercury	0.120	mg/kg	C U	0.120	mg/kg	C U	0.120	mg/kg	C U
Molybdenum	1.100	mg/kg	C U	0.740	mg/kg	C U	1.200	mg/kg	C U
Nickel	20.500	mg/kg	C -	16.900	mg/kg	C -	32.200	mg/kg	C -
Potassium	1590.000	mg/kg	C J	1680.000	mg/kg	C J	1900.000	mg/kg	C J
Selenium	0.230	mg/kg	C UJ	0.230	mg/kg	C UJ	0.240	mg/kg	C UJ
Silicon	1010.000	mg/kg	C -	760.000	mg/kg	C -	994.000	mg/kg	C -
Silver	0.470	mg/kg	C U	0.460	mg/kg	C U	0.490	mg/kg	C U
Sodium	198.000	mg/kg	C J	178.000	mg/kg	C J	117.000	mg/kg	C J
Thallium	0.230	mg/kg	C U	0.230	mg/kg	C UJ	0.240	mg/kg	C U
Vanadium	27.500	mg/kg	C J	27.000	mg/kg	C J	35.200	mg/kg	C J
Zinc	55.100	mg/kg	C J	55.000	mg/kg	C J	66.200	mg/kg	C J
Volatile Organics									
1,1,1-Trichloroethane	12.000	ug/kg	C U	11.000	ug/kg	C U	12.000	ug/kg	C U
1,1,2,2-Tetrachloroethane	12.000	ug/kg	C U	11.000	ug/kg	C U	12.000	ug/kg	C U
1,1,2-Trichloroethane	12.000	ug/kg	C U	11.000	ug/kg	C U	12.000	ug/kg	C U
1,1-Dichloroethane	12.000	ug/kg	C U	11.000	ug/kg	C U	12.000	ug/kg	C U
1,1-Dichloroethene	12.000	ug/kg	C U	11.000	ug/kg	C U	12.000	ug/kg	C U
1,2-Dichloroethane	12.000	ug/kg	C U	11.000	ug/kg	C U	12.000	ug/kg	C U
1,2-Dichloroethene	12.000	ug/kg	C U	11.000	ug/kg	C U	12.000	ug/kg	C U
1,2-Dichloropropane	12.000	ug/kg	C U	11.000	ug/kg	C U	12.000	ug/kg	C U
2-Butanone	12.000	ug/kg	C U	11.000	ug/kg	C U	12.000	ug/kg	C U
2-Hexanone	12.000	ug/kg	C U	11.000	ug/kg	C U	12.000	ug/kg	C U
4-Methyl-2-pentanone	12.000	ug/kg	C U	11.000	ug/kg	C U	12.000	ug/kg	C U
Acetone	12.000	ug/kg	C UJ	11.000	ug/kg	C UJ	12.000	ug/kg	C UJ
Benzene	12.000	ug/kg	C U	11.000	ug/kg	C U	12.000	ug/kg	C U

000763

TABLE D-6A
(Continued)

PHASE II - CHEMICAL PARAMETERS

BORING NUMBER	LSP-SS-11			LSP-SS-12			LSP-SB-02		
SAMPLE NUMBER	114500			114503			114508		
	0.5-1			0.5-1			0.5-1		
SAMPLING DATE	05/04/93			05/04/93			05/05/93		
CHEMICAL PARAMETERS	RESULTS	UNITS	L VQ	RESULTS	UNITS	L VQ	RESULTS	UNITS	L VQ
Volatile Organics									
Bromodichloromethane	12.000	ug/kg	C U	11.000	ug/kg	C U	12.000	ug/kg	C U
Bromoform	12.000	ug/kg	C U	11.000	ug/kg	C U	12.000	ug/kg	C U
Bromomethane	12.000	ug/kg	C U	11.000	ug/kg	C U	12.000	ug/kg	C U
Carbon Tetrachloride	12.000	ug/kg	C U	11.000	ug/kg	C U	12.000	ug/kg	C U
Carbon disulfide	12.000	ug/kg	C U	11.000	ug/kg	C U	12.000	ug/kg	C U
Chlorobenzene	12.000	ug/kg	C U	11.000	ug/kg	C U	12.000	ug/kg	C U
Chloroethane	12.000	ug/kg	C U	11.000	ug/kg	C U	12.000	ug/kg	C U
Chloroform	12.000	ug/kg	C U	11.000	ug/kg	C U	12.000	ug/kg	C U
Chloromethane	12.000	ug/kg	C UJ	11.000	ug/kg	C UJ	12.000	ug/kg	C UJ
Dibromochloromethane	12.000	ug/kg	C U	11.000	ug/kg	C U	12.000	ug/kg	C U
Ethylbenzene	12.000	ug/kg	C U	11.000	ug/kg	C U	12.000	ug/kg	C U
Methylene chloride	12.000	ug/kg	C U	16.000	ug/kg	C U	12.000	ug/kg	C U
Styrene	12.000	ug/kg	C U	11.000	ug/kg	C U	12.000	ug/kg	C U
Tetrachloroethene	12.000	ug/kg	C U	11.000	ug/kg	C U	12.000	ug/kg	C U
Toluene	12.000	ug/kg	C U	11.000	ug/kg	C U	12.000	ug/kg	C U
Trichloroethene	12.000	ug/kg	C U	11.000	ug/kg	C U	12.000	ug/kg	C U
Vinyl Acetate	12.000	ug/kg	C U	11.000	ug/kg	C U	12.000	ug/kg	C U
Vinyl chloride	12.000	ug/kg	C U	11.000	ug/kg	C U	12.000	ug/kg	C U
Xylenes, Total	12.000	ug/kg	C U	11.000	ug/kg	C U	12.000	ug/kg	C U
cis-1,3-Dichloropropene	12.000	ug/kg	C U	11.000	ug/kg	C U	12.000	ug/kg	C U
trans-1,3-Dichloropropene	12.000	ug/kg	C U	11.000	ug/kg	C U	12.000	ug/kg	C U
Semivolatile Organics									
1,2,4-Trichlorobenzene	400.000	ug/kg	C UJ	390.000	ug/kg	C UJ	390.000	ug/kg	C UJ
1,2-Dichlorobenzene	400.000	ug/kg	C U	390.000	ug/kg	C U	390.000	ug/kg	C U
1,3-Dichlorobenzene	400.000	ug/kg	C U	390.000	ug/kg	C U	390.000	ug/kg	C U
1,4-Dichlorobenzene	400.000	ug/kg	C U	390.000	ug/kg	C U	390.000	ug/kg	C U
2,4,5-Trichlorophenol	970.000	ug/kg	C U	950.000	ug/kg	C U	960.000	ug/kg	C U
2,4,6-Trichlorophenol	400.000	ug/kg	C U	390.000	ug/kg	C U	390.000	ug/kg	C U
2,4-Dichlorophenol	400.000	ug/kg	C U	390.000	ug/kg	C U	390.000	ug/kg	C U
2,4-Dimethylphenol	400.000	ug/kg	C U	390.000	ug/kg	C U	390.000	ug/kg	C U
2,4-Dinitrophenol	970.000	ug/kg	C R	950.000	ug/kg	C R	960.000	ug/kg	C R
2,4-Dinitrotoluene	400.000	ug/kg	C U	390.000	ug/kg	C U	390.000	ug/kg	C U
2,6-Dinitrotoluene	400.000	ug/kg	C U	390.000	ug/kg	C U	390.000	ug/kg	C U
2-Benzyl-4-chlorophenol	400.000	ug/kg	C UJ	390.000	ug/kg	C UJ	390.000	ug/kg	C UJ
2-Chloronaphthalene	400.000	ug/kg	C U	390.000	ug/kg	C U	390.000	ug/kg	C U
2-Chlorophenol	400.000	ug/kg	C U	390.000	ug/kg	C U	390.000	ug/kg	C U
2-Methylnaphthalene	400.000	ug/kg	C U	390.000	ug/kg	C U	390.000	ug/kg	C U
2-Methylphenol	400.000	ug/kg	C U	390.000	ug/kg	C U	390.000	ug/kg	C U
2-Nitroaniline	970.000	ug/kg	C U	950.000	ug/kg	C U	960.000	ug/kg	C U
2-Nitrophenol	400.000	ug/kg	C U	390.000	ug/kg	C U	390.000	ug/kg	C U

TABLE D-6A
(Continued)

PHASE II - CHEMICAL PARAMETERS

BORING NUMBER	LSP-SS-11				LSP-SS-12				LSP-SB-02			
SAMPLE NUMBER	114500				114503				114508			
	0.5-1				0.5-1				0.5-1			
SAMPLING DATE	05/04/93				05/04/93				05/05/93			
CHEMICAL PARAMETERS	RESULTS	UNITS	L	VQ	RESULTS	UNITS	L	VQ	RESULTS	UNITS	L	VQ
Semivolatile Organics												
3,3'-Dichlorobenzidine	400.000	ug/kg	C	U	390.000	ug/kg	C	U	390.000	ug/kg	C	U
3-Nitroaniline	970.000	ug/kg	C	U	950.000	ug/kg	C	U	960.000	ug/kg	C	U
4,6-Dinitro-2-methylphenol	970.000	ug/kg	C	R	950.000	ug/kg	C	R	960.000	ug/kg	C	R
4-Bromophenyl phenyl ether	400.000	ug/kg	C	U	390.000	ug/kg	C	U	390.000	ug/kg	C	U
4-Chloro-3-methylphenol	400.000	ug/kg	C	U	390.000	ug/kg	C	U	390.000	ug/kg	C	U
4-Chlorophenylphenyl ether	400.000	ug/kg	C	U	390.000	ug/kg	C	U	390.000	ug/kg	C	U
4-Methylphenol	400.000	ug/kg	C	U	390.000	ug/kg	C	U	390.000	ug/kg	C	U
4-Nitroaniline	970.000	ug/kg	C	U	950.000	ug/kg	C	U	960.000	ug/kg	C	U
4-Nitrophenol	970.000	ug/kg	C	R	950.000	ug/kg	C	R	960.000	ug/kg	C	R
Acenaphthene	400.000	ug/kg	C	U	390.000	ug/kg	C	U	390.000	ug/kg	C	U
Acenaphthylene	400.000	ug/kg	C	U	390.000	ug/kg	C	U	390.000	ug/kg	C	U
Anthracene	400.000	ug/kg	C	U	390.000	ug/kg	C	U	390.000	ug/kg	C	U
Benzo(a)anthracene	400.000	ug/kg	C	U	390.000	ug/kg	C	U	390.000	ug/kg	C	U
Benzo(a)pyrene	400.000	ug/kg	C	U	390.000	ug/kg	C	U	390.000	ug/kg	C	U
Benzo(b)fluoranthene	400.000	ug/kg	C	U	390.000	ug/kg	C	U	390.000	ug/kg	C	U
Benzo(g,h,i)perylene	400.000	ug/kg	C	U	390.000	ug/kg	C	U	390.000	ug/kg	C	U
Benzo(k)fluoranthene	400.000	ug/kg	C	U	390.000	ug/kg	C	U	390.000	ug/kg	C	U
Benzoic acid	1900.000	ug/kg	C	R	1900.000	ug/kg	C	R	1900.000	ug/kg	C	R
Benzyl alcohol	400.000	ug/kg	C	UJ	390.000	ug/kg	C	UJ	390.000	ug/kg	C	UJ
Butyl benzyl phthalate	400.000	ug/kg	C	R	390.000	ug/kg	C	R	390.000	ug/kg	C	R
Carbazole	400.000	ug/kg	C	U	390.000	ug/kg	C	U	390.000	ug/kg	C	U
Chrysene	400.000	ug/kg	C	U	390.000	ug/kg	C	U	390.000	ug/kg	C	U
Di-n-butyl phthalate	400.000	ug/kg	C	U	390.000	ug/kg	C	U	390.000	ug/kg	C	U
Di-n-octyl phthalate	400.000	ug/kg	C	R	390.000	ug/kg	C	R	390.000	ug/kg	C	R
Dibenzo(a,h)anthracene	400.000	ug/kg	C	UJ	390.000	ug/kg	C	UJ	390.000	ug/kg	C	UJ
Dibenzofuran	400.000	ug/kg	C	U	390.000	ug/kg	C	U	390.000	ug/kg	C	U
Diethyl phthalate	400.000	ug/kg	C	U	390.000	ug/kg	C	U	390.000	ug/kg	C	U
Dimethyl phthalate	400.000	ug/kg	C	U	390.000	ug/kg	C	U	390.000	ug/kg	C	U
Fluoranthene	400.000	ug/kg	C	U	390.000	ug/kg	C	U	57.000	ug/kg	C	J
Fluorene	400.000	ug/kg	C	U	390.000	ug/kg	C	U	390.000	ug/kg	C	U
Hexachlorobenzene	400.000	ug/kg	C	UJ	390.000	ug/kg	C	UJ	390.000	ug/kg	C	UJ
Hexachlorobutadiene	400.000	ug/kg	C	U	390.000	ug/kg	C	U	390.000	ug/kg	C	U
Hexachlorocyclopentadiene	400.000	ug/kg	C	UJ	390.000	ug/kg	C	UJ	390.000	ug/kg	C	UJ
Hexachloroethane	400.000	ug/kg	C	U	390.000	ug/kg	C	U	390.000	ug/kg	C	U
Indeno(1,2,3-cd)pyrene	400.000	ug/kg	C	UJ	390.000	ug/kg	C	UJ	390.000	ug/kg	C	UJ
Isophorone	400.000	ug/kg	C	U	390.000	ug/kg	C	U	390.000	ug/kg	C	U
N-Nitroso-di-n-propylamine	400.000	ug/kg	C	U	390.000	ug/kg	C	U	390.000	ug/kg	C	U
N-Nitrosodiphenylamine	400.000	ug/kg	C	U	390.000	ug/kg	C	U	390.000	ug/kg	C	U
Naphthalene	400.000	ug/kg	C	U	390.000	ug/kg	C	U	390.000	ug/kg	C	U
Nitrobenzene	400.000	ug/kg	C	U	390.000	ug/kg	C	U	390.000	ug/kg	C	U
Pentachlorophenol	970.000	ug/kg	C	UJ	950.000	ug/kg	C	UJ	960.000	ug/kg	C	UJ
Phenanthrene	400.000	ug/kg	C	U	390.000	ug/kg	C	U	390.000	ug/kg	C	U

000765

TABLE D-6A
(Continued)

PHASE II - CHEMICAL PARAMETERS

BORING NUMBER	LSP-SS-11				LSP-SS-12				LSP-SB-02			
SAMPLE NUMBER	114500				114503				114508			
	0.5-1				0.5-1				0.5-1			
SAMPLING DATE	05/04/93				05/04/93				05/05/93			
CHEMICAL PARAMETERS	RESULTS	UNITS	L	VQ	RESULTS	UNITS	L	VQ	RESULTS	UNITS	L	VQ
Semivolatile Organics												
Phenol	400.000	ug/kg	C	U	390.000	ug/kg	C	U	390.000	ug/kg	C	U
Pyrene	400.000	ug/kg	C	U	390.000	ug/kg	C	U	51.000	ug/kg	C	J
bis(2-Chloroethoxy)methane	400.000	ug/kg	C	U	390.000	ug/kg	C	U	390.000	ug/kg	C	U
bis(2-Chloroethyl)ether	400.000	ug/kg	C	U	390.000	ug/kg	C	U	390.000	ug/kg	C	U
bis(2-Chloroisopropyl) ether	400.000	ug/kg	C	U	390.000	ug/kg	C	U	390.000	ug/kg	C	U
bis(2-Ethylhexyl) phthalate	400.000	ug/kg	C	UJ	390.000	ug/kg	C	UJ	390.000	ug/kg	C	UJ
p-Chloroaniline	400.000	ug/kg	C	U	390.000	ug/kg	C	U	390.000	ug/kg	C	U
Pesticide Organics/PCBs												
4,4'-DDD	4.000	ug/kg	C	U	3.800	ug/kg	C	U	4.000	ug/kg	C	U
4,4'-DDE	4.000	ug/kg	C	U	3.800	ug/kg	C	U	4.000	ug/kg	C	U
4,4'-DDT	4.000	ug/kg	C	U	3.800	ug/kg	C	U	4.000	ug/kg	C	U
Aldrin	2.000	ug/kg	C	U	2.000	ug/kg	C	U	2.000	ug/kg	C	U
Aroclor-1016	40.000	ug/kg	C	U	38.000	ug/kg	C	U	40.000	ug/kg	C	U
Aroclor-1221	80.000	ug/kg	C	U	78.000	ug/kg	C	U	81.000	ug/kg	C	U
Aroclor-1232	40.000	ug/kg	C	U	38.000	ug/kg	C	U	40.000	ug/kg	C	U
Aroclor-1242	40.000	ug/kg	C	U	38.000	ug/kg	C	U	40.000	ug/kg	C	U
Aroclor-1248	40.000	ug/kg	C	U	38.000	ug/kg	C	U	40.000	ug/kg	C	U
Aroclor-1254	40.000	ug/kg	C	U	38.000	ug/kg	C	U	40.000	ug/kg	C	U
Aroclor-1260	40.000	ug/kg	C	U	38.000	ug/kg	C	U	40.000	ug/kg	C	U
Dieldrin	4.000	ug/kg	C	U	3.800	ug/kg	C	U	4.000	ug/kg	C	U
Endosulfan II	4.000	ug/kg	C	U	3.800	ug/kg	C	U	4.000	ug/kg	C	U
Endosulfan sulfate	4.000	ug/kg	C	U	3.800	ug/kg	C	U	4.000	ug/kg	C	U
Endosulfan-I	2.000	ug/kg	C	U	2.000	ug/kg	C	U	2.000	ug/kg	C	U
Endrin	4.000	ug/kg	C	U	3.800	ug/kg	C	U	4.000	ug/kg	C	U
Endrin aldehyde	4.000	ug/kg	C	U	3.800	ug/kg	C	U	4.000	ug/kg	C	U
Endrin ketone	4.000	ug/kg	C	U	3.800	ug/kg	C	U	4.000	ug/kg	C	U
Heptachlor	2.000	ug/kg	C	U	2.000	ug/kg	C	U	2.000	ug/kg	C	U
Heptachlor epoxide	2.000	ug/kg	C	U	2.000	ug/kg	C	U	2.000	ug/kg	C	U
Methoxychlor	20.000	ug/kg	C	U	20.000	ug/kg	C	U	20.000	ug/kg	C	U
Toxaphene	200.000	ug/kg	C	U	200.000	ug/kg	C	U	200.000	ug/kg	C	U
alpha-BHC	2.000	ug/kg	C	U	2.000	ug/kg	C	U	2.000	ug/kg	C	U
alpha-Chlordane	2.000	ug/kg	C	U	2.000	ug/kg	C	U	2.000	ug/kg	C	U
beta-BHC	2.000	ug/kg	C	U	2.000	ug/kg	C	U	2.000	ug/kg	C	U
delta-BHC	2.000	ug/kg	C	U	2.000	ug/kg	C	U	2.000	ug/kg	C	U
gamma-BHC (Lindane)	2.000	ug/kg	C	U	2.000	ug/kg	C	U	2.000	ug/kg	C	U
gamma-Chlordane	2.000	ug/kg	C	U	2.000	ug/kg	C	U	2.000	ug/kg	C	U

TABLE D-6A
(Continued)

PHASE II - CHEMICAL PARAMETERS

BORING NUMBER	LSP-SB-03				LSP-SB-01				LSP-SB-04			
SAMPLE NUMBER	114510				114564				114570			
	0.5-1				0.5-1				0.5-1			
SAMPLING DATE	05/05/93				05/05/93				05/06/93			
CHEMICAL PARAMETERS	RESULTS	UNITS	L	VQ	RESULTS	UNITS	L	VQ	RESULTS	UNITS	L	VQ
Inorganics												
Aluminum	18000.000	mg/kg	C	-	8530.000	mg/kg	C	-	13700.000	mg/kg	C	-
Antimony	0.690	mg/kg	C	UJ	0.230	mg/kg	C	UJ	0.410	mg/kg	C	UJ
Arsenic	8.800	mg/kg	C	-	5.800	mg/kg	C	-	7.200	mg/kg	C	-
Barium	123.000	mg/kg	C	-	55.400	mg/kg	C	J	98.300	mg/kg	C	J
Beryllium	1.800	mg/kg	C	-	0.400	mg/kg	C	-	0.880	mg/kg	C	-
Cadmium	1.300	mg/kg	C	-	0.650	mg/kg	C	-	1.100	mg/kg	C	-
Calcium	28200.000	mg/kg	C	-	75100.000	mg/kg	C	J	24100.000	mg/kg	C	J
Chromium	20.900	mg/kg	C	-	10.800	mg/kg	C	-	17.200	mg/kg	C	-
Cobalt	14.200	mg/kg	C	-	7.500	mg/kg	C	-	8.900	mg/kg	C	-
Copper	20.400	mg/kg	C	J	15.700	mg/kg	C	J	31.900	mg/kg	C	J
Cyanide	0.120	mg/kg	C	R	0.120	mg/kg	C	R	0.120	mg/kg	C	U
Iron	24900.000	mg/kg	C	-	16900.000	mg/kg	C	J	22000.000	mg/kg	C	J
Lead	18.000	mg/kg	C	J	11.600	mg/kg	C	J	12.200	mg/kg	C	J
Magnesium	11200.000	mg/kg	C	-	23600.000	mg/kg	C	J	9510.000	mg/kg	C	J
Manganese	974.000	mg/kg	C	-	448.000	mg/kg	C	J	479.000	mg/kg	C	J
Mercury	0.120	mg/kg	C	U	0.110	mg/kg	C	UJ	0.110	mg/kg	C	U
Molybdenum	1.800	mg/kg	C	U	1.500	mg/kg	C	U	1.700	mg/kg	C	U
Nickel	28.300	mg/kg	C	-	17.300	mg/kg	C	-	19.200	mg/kg	C	-
Potassium	1870.000	mg/kg	C	J	1360.000	mg/kg	C	J	1190.000	mg/kg	C	J
Selenium	0.240	mg/kg	C	UJ	0.220	mg/kg	C	UJ	0.240	mg/kg	C	UJ
Silicon	811.000	mg/kg	C	-	699.000	mg/kg	C	-	584.000	mg/kg	C	-
Silver	0.480	mg/kg	C	U	0.460	mg/kg	C	U	0.480	mg/kg	C	U
Sodium	128.000	mg/kg	C	J	263.000	mg/kg	C	-	93.100	mg/kg	C	-
Thallium	0.240	mg/kg	C	U	0.220	mg/kg	C	-	0.240	mg/kg	C	U
Vanadium	37.500	mg/kg	C	J	19.500	mg/kg	C	J	28.600	mg/kg	C	J
Zinc	59.100	mg/kg	C	J	47.100	mg/kg	C	J	53.000	mg/kg	C	J
Volatile Organics												
1,1,1-Trichloroethane	12.000	ug/kg	C	U	12.000	ug/kg	C	U	12.000	ug/kg	C	U
1,1,2,2-Tetrachloroethane	12.000	ug/kg	C	U	12.000	ug/kg	C	U	12.000	ug/kg	C	U
1,1,2-Trichloroethane	12.000	ug/kg	C	U	12.000	ug/kg	C	U	12.000	ug/kg	C	U
1,1-Dichloroethane	12.000	ug/kg	C	U	12.000	ug/kg	C	U	12.000	ug/kg	C	U
1,1-Dichloroethene	12.000	ug/kg	C	U	12.000	ug/kg	C	U	12.000	ug/kg	C	U
1,2-Dichloroethane	12.000	ug/kg	C	U	12.000	ug/kg	C	U	12.000	ug/kg	C	U
1,2-Dichloroethene	12.000	ug/kg	C	U	12.000	ug/kg	C	U	12.000	ug/kg	C	U
1,2-Dichloropropane	12.000	ug/kg	C	U	12.000	ug/kg	C	U	12.000	ug/kg	C	U
2-Butanone	12.000	ug/kg	C	U	12.000	ug/kg	C	U	12.000	ug/kg	C	U
2-Hexanone	12.000	ug/kg	C	U	12.000	ug/kg	C	U	12.000	ug/kg	C	U
4-Methyl-2-pentanone	12.000	ug/kg	C	U	12.000	ug/kg	C	U	12.000	ug/kg	C	U
Acetone	12.000	ug/kg	C	UJ	12.000	ug/kg	C	UJ	12.000	ug/kg	C	UJ
Benzene	12.000	ug/kg	C	U	12.000	ug/kg	C	U	12.000	ug/kg	C	U

TABLE D-6A
(Continued)

PHASE II - CHEMICAL PARAMETERS

BORING NUMBER	LSP-SB-03			LSP-SB-01			LSP-SB-04		
SAMPLE NUMBER	114510			114564			114570		
	0.5-1			0.5-1			0.5-1		
SAMPLING DATE	05/05/93			05/05/93			05/06/93		
CHEMICAL PARAMETERS	RESULTS	UNITS	L VQ	RESULTS	UNITS	L VQ	RESULTS	UNITS	L VQ
Volatile Organics									
Bromodichloromethane	12.000	ug/kg	C U	12.000	ug/kg	C U	12.000	ug/kg	C U
Bromoform	12.000	ug/kg	C U	12.000	ug/kg	C U	12.000	ug/kg	C U
Bromomethane	12.000	ug/kg	C U	12.000	ug/kg	C U	12.000	ug/kg	C U
Carbon Tetrachloride	12.000	ug/kg	C U	12.000	ug/kg	C U	12.000	ug/kg	C U
Carbon disulfide	12.000	ug/kg	C U	12.000	ug/kg	C U	12.000	ug/kg	C U
Chlorobenzene	12.000	ug/kg	C U	12.000	ug/kg	C U	12.000	ug/kg	C U
Chloroethane	12.000	ug/kg	C U	12.000	ug/kg	C U	12.000	ug/kg	C U
Chloroform	12.000	ug/kg	C U	12.000	ug/kg	C U	12.000	ug/kg	C U
Chloromethane	12.000	ug/kg	C UJ	12.000	ug/kg	C UJ	12.000	ug/kg	C UJ
Dibromochloromethane	12.000	ug/kg	C U	12.000	ug/kg	C U	12.000	ug/kg	C U
Ethylbenzene	12.000	ug/kg	C U	12.000	ug/kg	C U	12.000	ug/kg	C U
Methylene chloride	12.000	ug/kg	C U	18.000	ug/kg	C U	12.000	ug/kg	C U
Styrene	12.000	ug/kg	C U	12.000	ug/kg	C U	12.000	ug/kg	C U
Tetrachloroethene	12.000	ug/kg	C U	12.000	ug/kg	C U	12.000	ug/kg	C U
Toluene	12.000	ug/kg	C U	12.000	ug/kg	C U	12.000	ug/kg	C U
Trichloroethene	12.000	ug/kg	C U	12.000	ug/kg	C U	12.000	ug/kg	C U
Vinyl Acetate	12.000	ug/kg	C U	12.000	ug/kg	C U	12.000	ug/kg	C U
Vinyl chloride	12.000	ug/kg	C U	12.000	ug/kg	C U	12.000	ug/kg	C U
Xylenes, Total	12.000	ug/kg	C U	12.000	ug/kg	C U	12.000	ug/kg	C U
cis-1,3-Dichloropropene	12.000	ug/kg	C U	12.000	ug/kg	C U	12.000	ug/kg	C U
trans-1,3-Dichloropropene	12.000	ug/kg	C U	12.000	ug/kg	C U	12.000	ug/kg	C UJ
Semivolatile Organics									
1,2,4-Trichlorobenzene	400.000	ug/kg	C UJ	410.000	ug/kg	C U	390.000	ug/kg	C U
1,2-Dichlorobenzene	400.000	ug/kg	C U	410.000	ug/kg	C U	390.000	ug/kg	C U
1,3-Dichlorobenzene	400.000	ug/kg	C U	410.000	ug/kg	C U	390.000	ug/kg	C U
1,4-Dichlorobenzene	400.000	ug/kg	C U	410.000	ug/kg	C U	390.000	ug/kg	C U
2,4,5-Trichlorophenol	970.000	ug/kg	C U	1000.000	ug/kg	C U	950.000	ug/kg	C U
2,4,6-Trichlorophenol	400.000	ug/kg	C U	410.000	ug/kg	C U	390.000	ug/kg	C U
2,4-Dichlorophenol	400.000	ug/kg	C U	410.000	ug/kg	C U	390.000	ug/kg	C U
2,4-Dimethylphenol	400.000	ug/kg	C U	410.000	ug/kg	C U	390.000	ug/kg	C U
2,4-Dinitrophenol	970.000	ug/kg	C R	1000.000	ug/kg	C UJ	950.000	ug/kg	C UJ
2,4-Dinitrotoluene	400.000	ug/kg	C U	410.000	ug/kg	C U	390.000	ug/kg	C U
2,6-Dinitrotoluene	400.000	ug/kg	C U	410.000	ug/kg	C U	390.000	ug/kg	C U
2-Benzyl-4-chlorophenol	400.000	ug/kg	C UJ	NA			NA		
2-Chloronaphthalene	400.000	ug/kg	C U	410.000	ug/kg	C U	390.000	ug/kg	C U
2-Chlorophenol	400.000	ug/kg	C U	410.000	ug/kg	C U	390.000	ug/kg	C U
2-Methylnaphthalene	400.000	ug/kg	C U	410.000	ug/kg	C U	390.000	ug/kg	C U
2-Methylphenol	400.000	ug/kg	C U	410.000	ug/kg	C U	390.000	ug/kg	C U
2-Nitroaniline	970.000	ug/kg	C U	1000.000	ug/kg	C U	950.000	ug/kg	C U
2-Nitrophenol	400.000	ug/kg	C U	410.000	ug/kg	C U	390.000	ug/kg	C U

TABLE D-6A
(Continued)

PHASE II - CHEMICAL PARAMETERS

BORING NUMBER	LSP-SB-03			LSP-SB-01			LSP-SB-04		
SAMPLE NUMBER	114510			114564			114570		
	0.5-1			0.5-1			0.5-1		
SAMPLING DATE	05/05/93			05/05/93			05/06/93		
CHEMICAL PARAMETERS	RESULTS	UNITS	L VQ	RESULTS	UNITS	L VQ	RESULTS	UNITS	L VQ
Semivolatile Organics									
3,3'-Dichlorobenzidine	400.000	ug/kg	C U	410.000	ug/kg	C UJ	390.000	ug/kg	C UJ
3-Nitroaniline	970.000	ug/kg	C U	1000.000	ug/kg	C UJ	950.000	ug/kg	C UJ
4,6-Dinitro-2-methylphenol	970.000	ug/kg	C R	1000.000	ug/kg	C U	950.000	ug/kg	C U
4-Bromophenyl phenyl ether	400.000	ug/kg	C U	410.000	ug/kg	C U	390.000	ug/kg	C U
4-Chloro-3-methylphenol	400.000	ug/kg	C U	410.000	ug/kg	C U	390.000	ug/kg	C U
4-Chlorophenylphenyl ether	400.000	ug/kg	C U	410.000	ug/kg	C U	390.000	ug/kg	C U
4-Methylphenol	400.000	ug/kg	C U	410.000	ug/kg	C U	390.000	ug/kg	C U
4-Nitroaniline	970.000	ug/kg	C U	1000.000	ug/kg	C UJ	950.000	ug/kg	C UJ
4-Nitrophenol	970.000	ug/kg	C R	1000.000	ug/kg	C U	950.000	ug/kg	C U
Acenaphthene	400.000	ug/kg	C U	410.000	ug/kg	C U	390.000	ug/kg	C U
Acenaphthylene	400.000	ug/kg	C U	410.000	ug/kg	C U	390.000	ug/kg	C U
Anthracene	400.000	ug/kg	C U	410.000	ug/kg	C U	390.000	ug/kg	C U
Benzo(a)anthracene	400.000	ug/kg	C U	410.000	ug/kg	C U	390.000	ug/kg	C U
Benzo(a)pyrene	400.000	ug/kg	C U	410.000	ug/kg	C U	390.000	ug/kg	C U
Benzo(b)fluoranthene	400.000	ug/kg	C U	410.000	ug/kg	C U	390.000	ug/kg	C U
Benzo(g,h,i)perylene	400.000	ug/kg	C U	410.000	ug/kg	C U	390.000	ug/kg	C U
Benzo(k)fluoranthene	400.000	ug/kg	C U	410.000	ug/kg	C U	390.000	ug/kg	C U
Benzoic acid	1900.000	ug/kg	C R	NA			NA		
Benzyl alcohol	400.000	ug/kg	C UJ	NA			NA		
Butyl benzyl phthalate	400.000	ug/kg	C R	410.000	ug/kg	C U	390.000	ug/kg	C U
Carbazole	400.000	ug/kg	C U	410.000	ug/kg	C U	390.000	ug/kg	C U
Chrysene	400.000	ug/kg	C U	410.000	ug/kg	C U	390.000	ug/kg	C U
Di-n-butyl phthalate	400.000	ug/kg	C U	410.000	ug/kg	C U	390.000	ug/kg	C U
Di-n-octyl phthalate	400.000	ug/kg	C R	410.000	ug/kg	C U	390.000	ug/kg	C U
Dibenzo(a,h)anthracene	400.000	ug/kg	C UJ	410.000	ug/kg	C U	390.000	ug/kg	C U
Dibenzofuran	400.000	ug/kg	C U	410.000	ug/kg	C U	390.000	ug/kg	C U
Diethyl phthalate	400.000	ug/kg	C U	410.000	ug/kg	C U	390.000	ug/kg	C U
Dimethyl phthalate	400.000	ug/kg	C U	410.000	ug/kg	C U	390.000	ug/kg	C U
Fluoranthene	400.000	ug/kg	C U	410.000	ug/kg	C U	390.000	ug/kg	C U
Fluorene	400.000	ug/kg	C U	410.000	ug/kg	C U	390.000	ug/kg	C U
Hexachlorobenzene	400.000	ug/kg	C UJ	410.000	ug/kg	C U	390.000	ug/kg	C U
Hexachlorobutadiene	400.000	ug/kg	C U	410.000	ug/kg	C U	390.000	ug/kg	C U
Hexachlorocyclopentadiene	400.000	ug/kg	C UJ	410.000	ug/kg	C U	390.000	ug/kg	C U
Hexachloroethane	400.000	ug/kg	C U	410.000	ug/kg	C U	390.000	ug/kg	C U
Indeno(1,2,3-cd)pyrene	400.000	ug/kg	C UJ	410.000	ug/kg	C U	390.000	ug/kg	C U
Isophorone	400.000	ug/kg	C U	410.000	ug/kg	C U	390.000	ug/kg	C U
N-Nitroso-di-n-propylamine	400.000	ug/kg	C U	410.000	ug/kg	C U	390.000	ug/kg	C U
N-Nitrosodiphenylamine	400.000	ug/kg	C U	410.000	ug/kg	C U	390.000	ug/kg	C U
Naphthalene	400.000	ug/kg	C U	410.000	ug/kg	C U	390.000	ug/kg	C U
Nitrobenzene	400.000	ug/kg	C U	410.000	ug/kg	C U	390.000	ug/kg	C U
Pentachlorophenol	970.000	ug/kg	C UJ	1000.000	ug/kg	C U	950.000	ug/kg	C U
Phenanthrene	400.000	ug/kg	C U	410.000	ug/kg	C U	390.000	ug/kg	C U

000239

TABLE D-6A
(Continued)

PHASE II - CHEMICAL PARAMETERS

BORING NUMBER	LSP-SB-03				LSP-SB-01				LSP-SB-04			
SAMPLE NUMBER	114510				114564				114570			
	0.5-1				0.5-1				0.5-1			
SAMPLING DATE	05/05/93				05/05/93				05/06/93			
CHEMICAL PARAMETERS	RESULTS	UNITS	L	VQ	RESULTS	UNITS	L	VQ	RESULTS	UNITS	L	VQ
Semivolatile Organics												
Phenol	400.000	ug/kg	C	U	410.000	ug/kg	C	U	390.000	ug/kg	C	U
Pyrene	400.000	ug/kg	C	U	410.000	ug/kg	C	U	390.000	ug/kg	C	U
bis(2-Chloroethoxy)methane	400.000	ug/kg	C	U	410.000	ug/kg	C	U	390.000	ug/kg	C	U
bis(2-Chloroethyl)ether	400.000	ug/kg	C	U	410.000	ug/kg	C	U	390.000	ug/kg	C	U
bis(2-Chloroisopropyl) ether	400.000	ug/kg	C	U	410.000	ug/kg	C	U	390.000	ug/kg	C	U
bis(2-Ethylhexyl) phthalate	400.000	ug/kg	C	UJ	360.000	ug/kg	C	J	390.000	ug/kg	C	U
p-Chloroaniline	400.000	ug/kg	C	U	410.000	ug/kg	C	U	390.000	ug/kg	C	U
Pesticide Organics/PCBs												
4,4'-DDD	4.100	ug/kg	C	U	4.100	ug/kg	C	U	4.500	ug/kg	C	UJ
4,4'-DDE	4.100	ug/kg	C	U	4.100	ug/kg	C	UJ	4.500	ug/kg	C	UJ
4,4'-DDT	4.100	ug/kg	C	U	4.100	ug/kg	C	U	4.500	ug/kg	C	UJ
Aldrin	2.100	ug/kg	C	U	2.100	ug/kg	C	U	2.300	ug/kg	C	UJ
Aroclor-1016	41.000	ug/kg	C	U	41.000	ug/kg	C	U	45.000	ug/kg	C	UJ
Aroclor-1221	82.000	ug/kg	C	U	83.000	ug/kg	C	U	91.000	ug/kg	C	UJ
Aroclor-1232	41.000	ug/kg	C	U	41.000	ug/kg	C	U	45.000	ug/kg	C	UJ
Aroclor-1242	41.000	ug/kg	C	U	41.000	ug/kg	C	U	45.000	ug/kg	C	UJ
Aroclor-1248	41.000	ug/kg	C	U	41.000	ug/kg	C	U	45.000	ug/kg	C	UJ
Aroclor-1254	41.000	ug/kg	C	U	41.000	ug/kg	C	U	45.000	ug/kg	C	UJ
Aroclor-1260	41.000	ug/kg	C	U	41.000	ug/kg	C	U	45.000	ug/kg	C	UJ
Dieldrin	4.100	ug/kg	C	U	4.100	ug/kg	C	U	4.500	ug/kg	C	UJ
Endosulfan II	4.100	ug/kg	C	U	4.100	ug/kg	C	U	4.500	ug/kg	C	UJ
Endosulfan sulfate	4.100	ug/kg	C	U	4.100	ug/kg	C	U	4.500	ug/kg	C	UJ
Endosulfan-I	2.100	ug/kg	C	U	2.100	ug/kg	C	U	2.300	ug/kg	C	UJ
Endrin	4.100	ug/kg	C	U	4.100	ug/kg	C	U	4.500	ug/kg	C	UJ
Endrin aldehyde	4.100	ug/kg	C	U	4.100	ug/kg	C	U	4.500	ug/kg	C	UJ
Endrin ketone	4.100	ug/kg	C	U	4.100	ug/kg	C	U	4.500	ug/kg	C	UJ
Heptachlor	2.100	ug/kg	C	U	2.100	ug/kg	C	U	2.300	ug/kg	C	UJ
Heptachlor epoxide	2.100	ug/kg	C	U	2.100	ug/kg	C	U	2.300	ug/kg	C	UJ
Methoxychlor	21.000	ug/kg	C	U	21.000	ug/kg	C	U	23.000	ug/kg	C	UJ
Toxaphene	210.000	ug/kg	C	U	210.000	ug/kg	C	U	230.000	ug/kg	C	UJ
alpha-BHC	2.100	ug/kg	C	U	2.100	ug/kg	C	U	2.300	ug/kg	C	UJ
alpha-Chlordane	2.100	ug/kg	C	U	2.100	ug/kg	C	U	2.300	ug/kg	C	UJ
beta-BHC	2.100	ug/kg	C	U	2.100	ug/kg	C	U	2.300	ug/kg	C	UJ
delta-BHC	2.100	ug/kg	C	U	2.100	ug/kg	C	UJ	2.300	ug/kg	C	UJ
gamma-BHC (Lindane)	2.100	ug/kg	C	U	2.100	ug/kg	C	U	2.300	ug/kg	C	UJ
gamma-Chlordane	2.100	ug/kg	C	U	2.100	ug/kg	C	U	2.300	ug/kg	C	UJ

TABLE D-6A
(Continued)

PHASE II - CHEMICAL PARAMETERS

BORING NUMBER	LSP-SB-07			LSP-SB-05			LSP-SB-06		
SAMPLE NUMBER	114576			114600			114602		
	0.5-1			0.5-1			0.5-1		
SAMPLING DATE	05/06/93			05/10/93			05/10/93		
CHEMICAL PARAMETERS	RESULTS	UNITS	L VQ	RESULTS	UNITS	L VQ	RESULTS	UNITS	L VQ
Inorganics									
Aluminum	13700.000	mg/kg	C -	14300.000	mg/kg	C -	14400.000	mg/kg	C -
Antimony	0.510	mg/kg	C UJ	0.800	mg/kg	C UJ	0.340	mg/kg	C UJ
Arsenic	8.700	mg/kg	C -	7.200	mg/kg	C -	5.600	mg/kg	C -
Barium	93.700	mg/kg	C J	86.700	mg/kg	C J	166.000	mg/kg	C J
Beryllium	0.570	mg/kg	C -	0.790	mg/kg	C -	0.960	mg/kg	C -
Cadmium	1.000	mg/kg	C -	1.100	mg/kg	C -	1.600	mg/kg	C -
Calcium	11800.000	mg/kg	C -	71800.000	mg/kg	C -	9780.000	mg/kg	C -
Chromium	18.100	mg/kg	C -	17.100	mg/kg	C -	18.000	mg/kg	C -
Cobalt	13.200	mg/kg	C -	8.400	mg/kg	C -	16.200	mg/kg	C -
Copper	24.300	mg/kg	C J	37.600	mg/kg	C J	29.500	mg/kg	C J
Cyanide	0.120	mg/kg	C U	0.110	mg/kg	C -	0.120	mg/kg	C U
Iron	23500.000	mg/kg	C J	20700.000	mg/kg	C J	28200.000	mg/kg	C J
Lead	13.300	mg/kg	C -	12.200	mg/kg	C -	14.500	mg/kg	C -
Magnesium	6210.000	mg/kg	C -	18100.000	mg/kg	C -	4950.000	mg/kg	C -
Manganese	530.000	mg/kg	C J	536.000	mg/kg	C J	973.000	mg/kg	C J
Mercury	0.110	mg/kg	C U	0.110	mg/kg	C U	0.120	mg/kg	C U
Molybdenum	2.100	mg/kg	C U	1.100	mg/kg	C U	1.600	mg/kg	C U
Nickel	20.100	mg/kg	C -	19.300	mg/kg	C -	20.700	mg/kg	C -
Potassium	1050.000	mg/kg	C J	2320.000	mg/kg	C J	1220.000	mg/kg	C J
Selenium	0.290	mg/kg	C -	0.220	mg/kg	C UJ	0.260	mg/kg	C -
Silicon	1120.000	mg/kg	C J	1070.000	mg/kg	C J	1130.000	mg/kg	C J
Silver	0.480	mg/kg	C U	0.450	mg/kg	C U	0.450	mg/kg	C U
Sodium	81.300	mg/kg	C J	152.000	mg/kg	C J	70.000	mg/kg	C J
Thallium	0.240	mg/kg	C U	0.330	mg/kg	C -	0.300	mg/kg	C -
Vanadium	29.600	mg/kg	C J	30.100	mg/kg	C J	35.700	mg/kg	C J
Zinc	53.300	mg/kg	C J	51.500	mg/kg	C J	59.200	mg/kg	C J
Volatile Organics									
1,1,1-Trichloroethane	12.000	ug/kg	C U	11.000	ug/kg	C U	12.000	ug/kg	C U
1,1,2,2-Tetrachloroethane	12.000	ug/kg	C U	11.000	ug/kg	C U	12.000	ug/kg	C U
1,1,2-Trichloroethane	12.000	ug/kg	C U	11.000	ug/kg	C U	12.000	ug/kg	C U
1,1-Dichloroethane	12.000	ug/kg	C U	11.000	ug/kg	C U	12.000	ug/kg	C U
1,1-Dichloroethene	12.000	ug/kg	C U	11.000	ug/kg	C U	12.000	ug/kg	C U
1,2-Dichloroethane	12.000	ug/kg	C U	11.000	ug/kg	C U	12.000	ug/kg	C U
1,2-Dichloroethene	12.000	ug/kg	C U	11.000	ug/kg	C U	12.000	ug/kg	C U
1,2-Dichloropropane	12.000	ug/kg	C U	11.000	ug/kg	C U	12.000	ug/kg	C U
2-Butanone	12.000	ug/kg	C U	11.000	ug/kg	C U	12.000	ug/kg	C U
2-Hexanone	12.000	ug/kg	C U	11.000	ug/kg	C U	12.000	ug/kg	C U
4-Methyl-2-pentanone	12.000	ug/kg	C U	11.000	ug/kg	C U	12.000	ug/kg	C U
Acetone	12.000	ug/kg	C U	11.000	ug/kg	C U	12.000	ug/kg	C U
Benzene	12.000	ug/kg	C U	11.000	ug/kg	C U	12.000	ug/kg	C U

TABLE D-6A
(Continued)

PHASE II - CHEMICAL PARAMETERS

BORING NUMBER	LSP-SB-07			LSP-SB-05			LSP-SB-06		
SAMPLE NUMBER	114576			114600			114602		
	0.5-1			0.5-1			0.5-1		
SAMPLING DATE	05/06/93			05/10/93			05/10/93		
CHEMICAL PARAMETERS	RESULTS	UNITS L	VQ	RESULTS	UNITS L	VQ	RESULTS	UNITS L	VQ
Volatile Organics									
Bromodichloromethane	12.000	ug/kg C	U	11.000	ug/kg C	U	12.000	ug/kg C	U
Bromoform	12.000	ug/kg C	U	11.000	ug/kg C	U	12.000	ug/kg C	U
Bromomethane	12.000	ug/kg C	U	11.000	ug/kg C	U	12.000	ug/kg C	U
Carbon Tetrachloride	12.000	ug/kg C	U	11.000	ug/kg C	U	12.000	ug/kg C	U
Carbon disulfide	12.000	ug/kg C	U	11.000	ug/kg C	U	12.000	ug/kg C	U
Chlorobenzene	12.000	ug/kg C	U	11.000	ug/kg C	U	12.000	ug/kg C	U
Chloroethane	12.000	ug/kg C	U	11.000	ug/kg C	U	12.000	ug/kg C	U
Chloroform	12.000	ug/kg C	U	11.000	ug/kg C	U	12.000	ug/kg C	U
Chloromethane	12.000	ug/kg C	UJ	11.000	ug/kg C	UJ	12.000	ug/kg C	UJ
Dibromochloromethane	12.000	ug/kg C	U	11.000	ug/kg C	U	12.000	ug/kg C	U
Ethylbenzene	12.000	ug/kg C	U	11.000	ug/kg C	U	12.000	ug/kg C	U
Methylene chloride	12.000	ug/kg C	U	11.000	ug/kg C	U	12.000	ug/kg C	U
Styrene	12.000	ug/kg C	U	11.000	ug/kg C	U	12.000	ug/kg C	U
Tetrachloroethene	12.000	ug/kg C	U	11.000	ug/kg C	U	12.000	ug/kg C	U
Toluene	12.000	ug/kg C	U	11.000	ug/kg C	U	2.000	ug/kg C	J
Trichloroethene	12.000	ug/kg C	U	11.000	ug/kg C	U	12.000	ug/kg C	U
Vinyl Acetate	12.000	ug/kg C	U	11.000	ug/kg C	U	12.000	ug/kg C	U
Vinyl chloride	12.000	ug/kg C	U	11.000	ug/kg C	U	12.000	ug/kg C	U
Xylenes, Total	12.000	ug/kg C	U	11.000	ug/kg C	U	12.000	ug/kg C	U
cis-1,3-Dichloropropene	12.000	ug/kg C	U	11.000	ug/kg C	U	12.000	ug/kg C	U
trans-1,3-Dichloropropene	12.000	ug/kg C	U	11.000	ug/kg C	U	12.000	ug/kg C	U
Semivolatile Organics									
1,2,4-Trichlorobenzene	390.000	ug/kg C	UJ	360.000	ug/kg C	U	400.000	ug/kg C	U
1,2-Dichlorobenzene	390.000	ug/kg C	UJ	360.000	ug/kg C	U	400.000	ug/kg C	U
1,3-Dichlorobenzene	390.000	ug/kg C	UJ	360.000	ug/kg C	U	400.000	ug/kg C	U
1,4-Dichlorobenzene	390.000	ug/kg C	UJ	360.000	ug/kg C	U	400.000	ug/kg C	U
2,4,5-Trichlorophenol	950.000	ug/kg C	UJ	870.000	ug/kg C	U	960.000	ug/kg C	U
2,4,6-Trichlorophenol	390.000	ug/kg C	UJ	360.000	ug/kg C	U	400.000	ug/kg C	U
2,4-Dichlorophenol	390.000	ug/kg C	UJ	360.000	ug/kg C	U	400.000	ug/kg C	U
2,4-Dimethylphenol	390.000	ug/kg C	UJ	360.000	ug/kg C	U	400.000	ug/kg C	U
2,4-Dinitrophenol	950.000	ug/kg C	UJ	870.000	ug/kg C	UJ	960.000	ug/kg C	UJ
2,4-Dinitrotoluene	390.000	ug/kg C	UJ	360.000	ug/kg C	U	400.000	ug/kg C	U
2,6-Dinitrotoluene	390.000	ug/kg C	UJ	360.000	ug/kg C	U	400.000	ug/kg C	U
2-Chloronaphthalene	390.000	ug/kg C	UJ	360.000	ug/kg C	U	400.000	ug/kg C	U
2-Chlorophenol	390.000	ug/kg C	UJ	360.000	ug/kg C	U	400.000	ug/kg C	U
2-Methylnaphthalene	390.000	ug/kg C	UJ	360.000	ug/kg C	U	400.000	ug/kg C	U
2-Methylphenol	390.000	ug/kg C	UJ	360.000	ug/kg C	U	400.000	ug/kg C	U
2-Nitroaniline	950.000	ug/kg C	UJ	870.000	ug/kg C	U	960.000	ug/kg C	U
2-Nitrophenol	390.000	ug/kg C	UJ	360.000	ug/kg C	U	400.000	ug/kg C	U
3,3'-Dichlorobenzidine	390.000	ug/kg C	UJ	360.000	ug/kg C	U	400.000	ug/kg C	U

TABLE D-6A
(Continued)

PHASE II - CHEMICAL PARAMETERS

BORING NUMBER	LSP-SB-07			LSP-SB-05			LSP-SB-06		
SAMPLE NUMBER	114576			114600			114602		
	0.5-1			0.5-1			0.5-1		
SAMPLING DATE	05/06/93			05/10/93			05/10/93		
CHEMICAL PARAMETERS	RESULTS	UNITS	L VQ	RESULTS	UNITS	L VQ	RESULTS	UNITS	L VQ
Semivolatile Organics									
3-Nitroaniline	950.000	ug/kg	C UJ	870.000	ug/kg	C U	960.000	ug/kg	C U
4,6-Dinitro-2-methylphenol	950.000	ug/kg	C UJ	870.000	ug/kg	C U	960.000	ug/kg	C U
4-Bromophenyl phenyl ether	390.000	ug/kg	C UJ	360.000	ug/kg	C U	400.000	ug/kg	C U
4-Chloro-3-methylphenol	390.000	ug/kg	C UJ	360.000	ug/kg	C U	400.000	ug/kg	C U
4-Chlorophenylphenyl ether	390.000	ug/kg	C UJ	360.000	ug/kg	C U	400.000	ug/kg	C U
4-Methylphenol	390.000	ug/kg	C UJ	360.000	ug/kg	C U	400.000	ug/kg	C U
4-Nitroaniline	950.000	ug/kg	C UJ	870.000	ug/kg	C UJ	960.000	ug/kg	C UJ
4-Nitrophenol	950.000	ug/kg	C UJ	870.000	ug/kg	C U	960.000	ug/kg	C U
Acenaphthene	390.000	ug/kg	C UJ	360.000	ug/kg	C U	400.000	ug/kg	C U
Acenaphthylene	390.000	ug/kg	C UJ	360.000	ug/kg	C U	400.000	ug/kg	C U
Anthracene	390.000	ug/kg	C UJ	360.000	ug/kg	C U	400.000	ug/kg	C U
Benzo(a)anthracene	390.000	ug/kg	C UJ	360.000	ug/kg	C U	400.000	ug/kg	C U
Benzo(a)pyrene	390.000	ug/kg	C UJ	360.000	ug/kg	C U	400.000	ug/kg	C U
Benzo(b)fluoranthene	390.000	ug/kg	C UJ	360.000	ug/kg	C U	400.000	ug/kg	C U
Benzo(g,h,i)perylene	390.000	ug/kg	C UJ	360.000	ug/kg	C U	400.000	ug/kg	C U
Benzo(k)fluoranthene	390.000	ug/kg	C UJ	360.000	ug/kg	C U	400.000	ug/kg	C U
Butyl benzyl phthalate	390.000	ug/kg	C UJ	360.000	ug/kg	C U	400.000	ug/kg	C U
Carbazole	390.000	ug/kg	C UJ	360.000	ug/kg	C U	400.000	ug/kg	C U
Chrysene	390.000	ug/kg	C UJ	360.000	ug/kg	C U	400.000	ug/kg	C U
Di-n-butyl phthalate	390.000	ug/kg	C UJ	360.000	ug/kg	C U	400.000	ug/kg	C U
Di-n-octyl phthalate	390.000	ug/kg	C UJ	360.000	ug/kg	C U	400.000	ug/kg	C U
Dibenzo(a,h)anthracene	390.000	ug/kg	C UJ	360.000	ug/kg	C U-	400.000	ug/kg	C U
Dibenzofuran	390.000	ug/kg	C UJ	360.000	ug/kg	C U	400.000	ug/kg	C U
Diethyl phthalate	390.000	ug/kg	C UJ	360.000	ug/kg	C U	400.000	ug/kg	C U
Dimethyl phthalate	390.000	ug/kg	C UJ	360.000	ug/kg	C U	400.000	ug/kg	C U
Fluoranthene	390.000	ug/kg	C UJ	360.000	ug/kg	C U	400.000	ug/kg	C U
Fluorene	390.000	ug/kg	C UJ	360.000	ug/kg	C U	400.000	ug/kg	C U
Hexachlorobenzene	390.000	ug/kg	C UJ	360.000	ug/kg	C U	400.000	ug/kg	C U
Hexachlorobutadiene	390.000	ug/kg	C UJ	360.000	ug/kg	C U	400.000	ug/kg	C U
Hexachlorocyclopentadiene	390.000	ug/kg	C UJ	360.000	ug/kg	C U	400.000	ug/kg	C U
Hexachloroethane	390.000	ug/kg	C UJ	360.000	ug/kg	C U	400.000	ug/kg	C U
Indeno(1,2,3-cd)pyrene	390.000	ug/kg	C UJ	360.000	ug/kg	C U	400.000	ug/kg	C U
Isophorone	390.000	ug/kg	C UJ	360.000	ug/kg	C U	400.000	ug/kg	C U
N-Nitroso-di-n-propylamine	390.000	ug/kg	C UJ	360.000	ug/kg	C UJ	400.000	ug/kg	C UJ
N-Nitrosodiphenylamine	390.000	ug/kg	C UJ	360.000	ug/kg	C U	400.000	ug/kg	C U
Naphthalene	390.000	ug/kg	C UJ	360.000	ug/kg	C U	400.000	ug/kg	C U
Nitrobenzene	390.000	ug/kg	C UJ	360.000	ug/kg	C U	400.000	ug/kg	C U
Pentachlorophenol	950.000	ug/kg	C UJ	870.000	ug/kg	C U	960.000	ug/kg	C U
Phenanthrene	390.000	ug/kg	C UJ	360.000	ug/kg	C U	400.000	ug/kg	C U
Phenol	390.000	ug/kg	C UJ	360.000	ug/kg	C U	400.000	ug/kg	C U
Pyrene	390.000	ug/kg	C UJ	360.000	ug/kg	C U	400.000	ug/kg	C U
bis(2-Chloroethoxy)methane	390.000	ug/kg	C UJ	360.000	ug/kg	C U	400.000	ug/kg	C U

TABLE D-6A
(Continued)

PHASE II - CHEMICAL PARAMETERS

BORING NUMBER	LSP-SB-07			LSP-SB-05			LSP-SB-06		
SAMPLE NUMBER	114576			114600			114602		
	0.5-1			0.5-1			0.5-1		
SAMPLING DATE	05/06/93			05/10/93			05/10/93		
CHEMICAL PARAMETERS	RESULTS	UNITS	L VQ	RESULTS	UNITS	L VQ	RESULTS	UNITS	L VQ
Semivolatile Organics									
bis(2-Chloroethyl)ether	390.000	ug/kg	C UJ	360.000	ug/kg	C U	400.000	ug/kg	C U
bis(2-Chloroisopropyl) ether	390.000	ug/kg	C UJ	360.000	ug/kg	C U	400.000	ug/kg	C U
bis(2-Ethylhexyl) phthalate	220.000	ug/kg	C J	360.000	ug/kg	C U	400.000	ug/kg	C U
p-Chloroaniline	390.000	ug/kg	C UJ	360.000	ug/kg	C U	400.000	ug/kg	C U
Pesticide Organics/PCBs									
4,4'-DDD	3.900	ug/kg	C U	3.600	ug/kg	C U	3.900	ug/kg	C U
4,4'-DDE	3.900	ug/kg	C UJ	3.600	ug/kg	C UJ	3.900	ug/kg	C UJ
4,4'-DDT	3.900	ug/kg	C UJ	3.600	ug/kg	C UJ	3.900	ug/kg	C UJ
Aldrin	2.000	ug/kg	C U	1.800	ug/kg	C U	2.000	ug/kg	C U
Aroclor-1016	39.000	ug/kg	C U	36.000	ug/kg	C U	39.000	ug/kg	C U
Aroclor-1221	79.000	ug/kg	C U	73.000	ug/kg	C U	80.000	ug/kg	C U
Aroclor-1232	39.000	ug/kg	C U	36.000	ug/kg	C U	39.000	ug/kg	C U
Aroclor-1242	39.000	ug/kg	C U	36.000	ug/kg	C U	39.000	ug/kg	C U
Aroclor-1248	39.000	ug/kg	C U	36.000	ug/kg	C U	39.000	ug/kg	C U
Aroclor-1254	39.000	ug/kg	C U	36.000	ug/kg	C U	39.000	ug/kg	C U
Aroclor-1260	39.000	ug/kg	C U	36.000	ug/kg	C U	39.000	ug/kg	C U
Dieldrin	3.900	ug/kg	C U	3.600	ug/kg	C U	3.900	ug/kg	C U
Endosulfan II	3.900	ug/kg	C U	3.600	ug/kg	C U	3.900	ug/kg	C U
Endosulfan sulfate	3.900	ug/kg	C U	3.600	ug/kg	C U	3.900	ug/kg	C U
Endosulfan-I	2.000	ug/kg	C U	1.800	ug/kg	C U	2.000	ug/kg	C U
Endrin	3.900	ug/kg	C UJ	3.600	ug/kg	C UJ	3.900	ug/kg	C UJ
Endrin aldehyde	3.900	ug/kg	C U	3.600	ug/kg	C U	3.900	ug/kg	C U
Endrin ketone	3.900	ug/kg	C U	3.600	ug/kg	C U	3.900	ug/kg	C U
Heptachlor	2.000	ug/kg	C U	1.800	ug/kg	C U	2.000	ug/kg	C U
Heptachlor epoxide	2.000	ug/kg	C U	1.800	ug/kg	C U	2.000	ug/kg	C U
Methoxychlor	20.000	ug/kg	C UJ	18.000	ug/kg	C UJ	20.000	ug/kg	C UJ
Toxaphene	200.000	ug/kg	C U	180.000	ug/kg	C U	200.000	ug/kg	C U
alpha-BHC	2.000	ug/kg	C U	1.800	ug/kg	C U	2.000	ug/kg	C U
alpha-Chlordane	2.000	ug/kg	C U	1.800	ug/kg	C U	2.000	ug/kg	C U
beta-BHC	2.000	ug/kg	C U	1.800	ug/kg	C U	2.000	ug/kg	C U
delta-BHC	2.000	ug/kg	C U	1.800	ug/kg	C U	2.000	ug/kg	C U
gamma-BHC (Lindane)	2.000	ug/kg	C UJ	1.800	ug/kg	C UJ	2.000	ug/kg	C UJ
gamma-Chlordane	2.000	ug/kg	C U	1.800	ug/kg	C U	2.000	ug/kg	C U

TABLE D-6A
(Continued)

PHASE II - CHEMICAL PARAMETERS

BORING NUMBER	LSP-SB-04			K-65 TRENCH			K-65 TRENCH		
SAMPLE NUMBER	114868			114767			114776		
	0.5-1			0-6			0-6		
SAMPLING DATE	06/09/93			05/25/93			06/07/93		
CHEMICAL PARAMETERS	RESULTS	UNITS	L VQ	RESULTS	UNITS	L VQ	RESULTS	UNITS	L VQ
Inorganics									
Aluminum	NA			18600.000	mg/kg	C -	11200.000	mg/kg	C -
Antimony	NA			1.700	mg/kg	C UJ	21.800	mg/kg	C J
Arsenic	NA			9.000	mg/kg	C J	8.500	mg/kg	C -
Barium	NA			121.000	mg/kg	C -	96.600	mg/kg	C -
Beryllium	NA			1.000	mg/kg	C -	0.610	mg/kg	C -
Cadmium	NA			1.700	mg/kg	C U	0.750	mg/kg	C U
Calcium	NA			89800.000	mg/kg	C -	70700.000	mg/kg	C -
Chromium	NA			17.800	mg/kg	C -	11.000	mg/kg	C -
Cobalt	NA			10.100	mg/kg	C -	12.300	mg/kg	C -
Copper	NA			25.100	mg/kg	C -	21.400	mg/kg	C U
Cyanide	NA			0.180	mg/kg	C U	NA		
Iron	NA			30100.000	mg/kg	C -	22900.000	mg/kg	C -
Lead	NA			14.300	mg/kg	C -	10.400	mg/kg	C -
Magnesium	NA			32700.000	mg/kg	C -	23600.000	mg/kg	C -
Manganese	NA			648.000	mg/kg	C -	570.000	mg/kg	C -
Mercury	NA			0.150	mg/kg	C U	0.060	mg/kg	C U
Molybdenum	NA			8.900	mg/kg	C -	1.600	mg/kg	C -
Nickel	NA			27.500	mg/kg	C -	21.100	mg/kg	C -
Potassium	NA			2150.000	mg/kg	C -	1830.000	mg/kg	C -
Selenium	NA			0.690	mg/kg	C U	0.240	mg/kg	C UJ
Silicon	NA			1310.000	mg/kg	C J	632.000	mg/kg	C J
Silver	NA			7.800	mg/kg	C -	0.850	mg/kg	C U
Sodium	NA			180.000	mg/kg	C -	152.000	mg/kg	C -
Thallium	NA			0.690	mg/kg	C U	0.240	mg/kg	C U
Vanadium	NA			42.100	mg/kg	C -	23.500	mg/kg	C -
Zinc	NA			80.200	mg/kg	C -	55.700	mg/kg	C J
Volatile Organics									
1,1,1-Trichloroethane	NA			18.000	ug/kg	C U	12.000	ug/kg	C U
1,1,2,2-Tetrachloroethane	NA			18.000	ug/kg	C U	12.000	ug/kg	C U
1,1,2-Trichloroethane	NA			18.000	ug/kg	C U	12.000	ug/kg	C U
1,1-Dichloroethane	NA			18.000	ug/kg	C U	12.000	ug/kg	C U
1,1-Dichloroethene	NA			18.000	ug/kg	C U	12.000	ug/kg	C U
1,2-Dichloroethane	NA			18.000	ug/kg	C U	12.000	ug/kg	C U
1,2-Dichloroethene	NA			18.000	ug/kg	C U	12.000	ug/kg	C U
1,2-Dichloropropane	NA			18.000	ug/kg	C U	12.000	ug/kg	C U
2-Butanone	NA			18.000	ug/kg	C U	12.000	ug/kg	C U
2-Hexanone	NA			18.000	ug/kg	C U	12.000	ug/kg	C U
4-Methyl-2-pentanone	NA			18.000	ug/kg	C U	12.000	ug/kg	C U
Acetone	NA			18.000	ug/kg	C U	12.000	ug/kg	C U
Benzene	NA			18.000	ug/kg	C U	12.000	ug/kg	C U

000275

TABLE D-6A
(Continued)

PHASE II - CHEMICAL PARAMETERS

BORING NUMBER	LSP-SB-04			K-65 TRENCH			K-65 TRENCH		
SAMPLE NUMBER	114868			114767			114776		
	0.5-1			0-6			0-6		
SAMPLING DATE	06/09/93			05/25/93			06/07/93		
CHEMICAL PARAMETERS	RESULTS	UNITS	VQ	RESULTS	UNITS	VQ	RESULTS	UNITS	VQ
Volatile Organics									
Bromodichloromethane	NA			18.000	ug/kg C	U	12.000	ug/kg C	U
Bromoform	NA			18.000	ug/kg C	U	12.000	ug/kg C	U
Bromomethane	NA			18.000	ug/kg C	U	12.000	ug/kg C	U
Carbon Tetrachloride	NA			18.000	ug/kg C	U	12.000	ug/kg C	U
Carbon disulfide	NA			18.000	ug/kg C	U	12.000	ug/kg C	U
Chlorobenzene	NA			18.000	ug/kg C	U	12.000	ug/kg C	U
Chloroethane	NA			18.000	ug/kg C	U	12.000	ug/kg C	U
Chloroform	NA			18.000	ug/kg C	U	12.000	ug/kg C	U
Chloromethane	NA			18.000	ug/kg C	U	12.000	ug/kg C	UJ
Dibromochloromethane	NA			18.000	ug/kg C	U	12.000	ug/kg C	U
Ethylbenzene	NA			18.000	ug/kg C	U	12.000	ug/kg C	U
Methylene chloride	NA			18.000	ug/kg C	U	15.000	ug/kg C	U
Styrene	NA			18.000	ug/kg C	U	12.000	ug/kg C	U
Tetrachloroethene	NA			18.000	ug/kg C	U	12.000	ug/kg C	U
Toluene	NA			18.000	ug/kg C	U	2.000	ug/kg C	J
Trichloroethene	NA			18.000	ug/kg C	U	12.000	ug/kg C	U
Vinyl Acetate	NA			18.000	ug/kg C	U	12.000	ug/kg C	U
Vinyl chloride	NA			18.000	ug/kg C	U	12.000	ug/kg C	U
Xylenes, Total	NA			18.000	ug/kg C	U	12.000	ug/kg C	U
cis-1,3-Dichloropropene	NA			18.000	ug/kg C	U	12.000	ug/kg C	U
trans-1,3-Dichloropropene	NA			18.000	ug/kg C	U	12.000	ug/kg C	U
Semivolatile Organics									
1,2,4-Trichlorobenzene	380.000	ug/kg C	U	400.000	ug/kg C	U	420.000	ug/kg C	U
1,2-Dichlorobenzene	380.000	ug/kg C	U	400.000	ug/kg C	U	420.000	ug/kg C	U
1,3-Dichlorobenzene	380.000	ug/kg C	U	400.000	ug/kg C	U	420.000	ug/kg C	U
1,4-Dichlorobenzene	380.000	ug/kg C	U	400.000	ug/kg C	U	420.000	ug/kg C	U
2,4,5-Trichlorophenol	920.000	ug/kg C	U	960.000	ug/kg C	U	1000.000	ug/kg C	U
2,4,6-Trichlorophenol	380.000	ug/kg C	U	400.000	ug/kg C	U	420.000	ug/kg C	U
2,4-Dichlorophenol	380.000	ug/kg C	U	400.000	ug/kg C	U	420.000	ug/kg C	U
2,4-Dimethylphenol	380.000	ug/kg C	U	400.000	ug/kg C	U	420.000	ug/kg C	U
2,4-Dinitrophenol	920.000	ug/kg C	UJ	960.000	ug/kg C	UJ	1000.000	ug/kg C	UJ
2,4-Dinitrotoluene	380.000	ug/kg C	U	400.000	ug/kg C	U	420.000	ug/kg C	U
2,6-Dinitrotoluene	380.000	ug/kg C	U	400.000	ug/kg C	U	420.000	ug/kg C	U
2-Benzyl-4-chlorophenol	380.000	ug/kg C	U	400.000	ug/kg C	UJ	420.000	ug/kg C	UJ
2-Chloronaphthalene	380.000	ug/kg C	U	400.000	ug/kg C	U	420.000	ug/kg C	U
2-Chlorophenol	380.000	ug/kg C	U	400.000	ug/kg C	U	420.000	ug/kg C	U
2-Methylnaphthalene	380.000	ug/kg C	U	400.000	ug/kg C	U	420.000	ug/kg C	U
2-Methylphenol	380.000	ug/kg C	U	400.000	ug/kg C	U	420.000	ug/kg C	U
2-Nitroaniline	920.000	ug/kg C	U	960.000	ug/kg C	U	1000.000	ug/kg C	U
2-Nitrophenol	380.000	ug/kg C	U	400.000	ug/kg C	U	420.000	ug/kg C	U

TABLE D-6A
(Continued)

PHASE II - CHEMICAL PARAMETERS

BORING NUMBER	LSP-SB-04				K-65 TRENCH				K-65 TRENCH			
SAMPLE NUMBER	114868				114767				114776			
	0.5-1				0-6				0-6			
SAMPLING DATE	06/09/93				05/25/93				06/07/93			
CHEMICAL PARAMETERS	RESULTS	UNITS	L	VQ	RESULTS	UNITS	L	VQ	RESULTS	UNITS	L	VQ
Semivolatile Organics												
3,3'-Dichlorobenzidine	380.000	ug/kg	C	U	400.000	ug/kg	C	U	420.000	ug/kg	C	U
3-Nitroaniline	920.000	ug/kg	C	U	960.000	ug/kg	C	U	1000.000	ug/kg	C	U
4,6-Dinitro-2-methylphenol	920.000	ug/kg	C	UJ	960.000	ug/kg	C	U	1000.000	ug/kg	C	UJ
4-Bromophenyl phenyl ether	380.000	ug/kg	C	U	400.000	ug/kg	C	U	420.000	ug/kg	C	U
4-Chloro-3-methylphenol	380.000	ug/kg	C	U	400.000	ug/kg	C	U	420.000	ug/kg	C	U
4-Chlorophenylphenyl ether	380.000	ug/kg	C	U	400.000	ug/kg	C	U	420.000	ug/kg	C	U
4-Methylphenol	380.000	ug/kg	C	U	400.000	ug/kg	C	U	420.000	ug/kg	C	U
4-Nitroaniline	920.000	ug/kg	C	U	960.000	ug/kg	C	U	1000.000	ug/kg	C	U
4-Nitrophenol	920.000	ug/kg	C	U	960.000	ug/kg	C	U	1000.000	ug/kg	C	UJ
Acenaphthene	380.000	ug/kg	C	U	400.000	ug/kg	C	U	420.000	ug/kg	C	U
Acenaphthylene	380.000	ug/kg	C	U	400.000	ug/kg	C	U	420.000	ug/kg	C	U
Anthracene	380.000	ug/kg	C	U	400.000	ug/kg	C	U	420.000	ug/kg	C	U
Benzo(a)anthracene	380.000	ug/kg	C	U	400.000	ug/kg	C	U	420.000	ug/kg	C	U
Benzo(a)pyrene	380.000	ug/kg	C	U	400.000	ug/kg	C	U	420.000	ug/kg	C	U
Benzo(b)fluoranthene	380.000	ug/kg	C	U	400.000	ug/kg	C	U	420.000	ug/kg	C	U
Benzo(g,h,i)perylene	380.000	ug/kg	C	U	400.000	ug/kg	C	U	420.000	ug/kg	C	U
Benzo(k)fluoranthene	380.000	ug/kg	C	U	400.000	ug/kg	C	U	420.000	ug/kg	C	U
Benzoic acid	1800.000	ug/kg	C	R	1900.000	ug/kg	C	UJ	2000.000	ug/kg	C	U
Benzyl alcohol	380.000	ug/kg	C	UJ	400.000	ug/kg	C	R	420.000	ug/kg	C	UJ
Butyl benzyl phthalate	380.000	ug/kg	C	U	400.000	ug/kg	C	U	420.000	ug/kg	C	U
Carbazole	380.000	ug/kg	C	U	400.000	ug/kg	C	U	420.000	ug/kg	C	U
Chrysene	380.000	ug/kg	C	U	400.000	ug/kg	C	U	420.000	ug/kg	C	U
Di-n-butyl phthalate	380.000	ug/kg	C	U	400.000	ug/kg	C	U	420.000	ug/kg	C	U
Di-n-octyl phthalate	380.000	ug/kg	C	U	400.000	ug/kg	C	U	420.000	ug/kg	C	U
Dibenzo(a,h)anthracene	380.000	ug/kg	C	U	400.000	ug/kg	C	U	420.000	ug/kg	C	U
Dibenzofuran	380.000	ug/kg	C	U	400.000	ug/kg	C	U	420.000	ug/kg	C	U
Diethyl phthalate	380.000	ug/kg	C	U	400.000	ug/kg	C	U	420.000	ug/kg	C	U
Dimethyl phthalate	380.000	ug/kg	C	U	400.000	ug/kg	C	U	420.000	ug/kg	C	U
Fluoranthene	380.000	ug/kg	C	U	400.000	ug/kg	C	U	420.000	ug/kg	C	U
Fluorene	380.000	ug/kg	C	U	400.000	ug/kg	C	U	420.000	ug/kg	C	U
Hexachlorobenzene	380.000	ug/kg	C	U	400.000	ug/kg	C	U	420.000	ug/kg	C	U
Hexachlorobutadiene	380.000	ug/kg	C	U	400.000	ug/kg	C	U	420.000	ug/kg	C	U
Hexachlorocyclopentadiene	380.000	ug/kg	C	U	400.000	ug/kg	C	U	420.000	ug/kg	C	U
Hexachloroethane	380.000	ug/kg	C	U	400.000	ug/kg	C	U	420.000	ug/kg	C	U
Indeno(1,2,3-cd)pyrene	380.000	ug/kg	C	U	400.000	ug/kg	C	U	420.000	ug/kg	C	U
Isophorone	380.000	ug/kg	C	U	400.000	ug/kg	C	U	420.000	ug/kg	C	U
N-Nitroso-di-n-propylamine	380.000	ug/kg	C	U	400.000	ug/kg	C	U	420.000	ug/kg	C	U
N-Nitrosodimethylamine	380.000	ug/kg	C	U	5.000	ug/kg	C	J	420.000	ug/kg	C	U
N-Nitrosodiphenylamine	380.000	ug/kg	C	U	400.000	ug/kg	C	U	420.000	ug/kg	C	U
Naphthalene	380.000	ug/kg	C	U	400.000	ug/kg	C	U	420.000	ug/kg	C	U
Nitrobenzene	380.000	ug/kg	C	U	400.000	ug/kg	C	U	420.000	ug/kg	C	U
Pentachlorophenol	920.000	ug/kg	C	U	960.000	ug/kg	C	U	1000.000	ug/kg	C	UJ

000272

TABLE D-6A
(Continued)

PHASE II - CHEMICAL PARAMETERS

BORING NUMBER	LSP-SB-04				K-65 TRENCH				K-65 TRENCH			
SAMPLE NUMBER	114868				114767				114776			
	0.5-1.				0-6				0-6			
SAMPLING DATE	06/09/93				05/25/93				06/07/93			
CHEMICAL PARAMETERS	RESULTS	UNITS	L	VQ	RESULTS	UNITS	L	VQ	RESULTS	UNITS	L	VQ
Semivolatile Organics												
Phenanthrene	380.000	ug/kg	C	U	400.000	ug/kg	C	U	420.000	ug/kg	C	U
Phenol	380.000	ug/kg	C	U	400.000	ug/kg	C	U	420.000	ug/kg	C	U
Pyrene	380.000	ug/kg	C	U	400.000	ug/kg	C	U	420.000	ug/kg	C	U
Tributyl phosphate	380.000	ug/kg	C	U	400.000	ug/kg	C	U	420.000	ug/kg	C	U
bis(2-Chloroethoxy)methane	380.000	ug/kg	C	U	400.000	ug/kg	C	U	420.000	ug/kg	C	U
bis(2-Chloroethyl)ether	380.000	ug/kg	C	U	400.000	ug/kg	C	U	420.000	ug/kg	C	U
bis(2-Chloroisopropyl) ether	380.000	ug/kg	C	U	400.000	ug/kg	C	U	420.000	ug/kg	C	U
bis(2-Ethylhexyl) phthalate	380.000	ug/kg	C	U	3.000	ug/kg	C	J	55.000	ug/kg	C	J
p-Chloroaniline	380.000	ug/kg	C	U	400.000	ug/kg	C	U	420.000	ug/kg	C	U
Pesticide Organics/PCBs												
4,4'-DDD	3.900	ug/kg	C	U	4.000	ug/kg	C	U	4.200	ug/kg	C	U
4,4'-DDE	3.900	ug/kg	C	U	4.000	ug/kg	C	U	4.200	ug/kg	C	U
4,4'-DDT	3.900	ug/kg	C	U	4.000	ug/kg	C	U	4.200	ug/kg	C	U
Aldrin	2.000	ug/kg	C	U	2.100	ug/kg	C	U	2.200	ug/kg	C	U
Aroclor-1016	39.000	ug/kg	C	U	40.000	ug/kg	C	U	42.000	ug/kg	C	U
Aroclor-1221	79.000	ug/kg	C	U	82.000	ug/kg	C	U	85.000	ug/kg	C	U
Aroclor-1232	39.000	ug/kg	C	U	40.000	ug/kg	C	U	42.000	ug/kg	C	U
Aroclor-1242	39.000	ug/kg	C	U	40.000	ug/kg	C	U	42.000	ug/kg	C	U
Aroclor-1248	39.000	ug/kg	C	U	40.000	ug/kg	C	U	42.000	ug/kg	C	U
Aroclor-1254	39.000	ug/kg	C	U	40.000	ug/kg	C	U	42.000	ug/kg	C	U
Aroclor-1260	39.000	ug/kg	C	U	40.000	ug/kg	C	U	42.000	ug/kg	C	U
Dieldrin	3.900	ug/kg	C	U	4.000	ug/kg	C	U	4.200	ug/kg	C	U
Endosulfan II	3.900	ug/kg	C	U	4.000	ug/kg	C	U	4.200	ug/kg	C	U
Endosulfan sulfate	3.900	ug/kg	C	U	4.000	ug/kg	C	U	4.200	ug/kg	C	U
Endosulfan-I	2.000	ug/kg	C	U	2.100	ug/kg	C	U	2.200	ug/kg	C	U
Endrin	3.900	ug/kg	C	U	4.000	ug/kg	C	U	4.200	ug/kg	C	U
Endrin aldehyde	3.900	ug/kg	C	UJ	4.000	ug/kg	C	UJ	4.200	ug/kg	C	U
Endrin ketone	3.900	ug/kg	C	U	4.000	ug/kg	C	U	4.200	ug/kg	C	U
Heptachlor	2.000	ug/kg	C	U	2.100	ug/kg	C	U	2.200	ug/kg	C	U
Heptachlor epoxide	2.000	ug/kg	C	U	2.100	ug/kg	C	U	2.200	ug/kg	C	U
Methoxychlor	20.000	ug/kg	C	U	21.000	ug/kg	C	U	22.000	ug/kg	C	U
Toxaphene	200.000	ug/kg	C	U	210.000	ug/kg	C	U	220.000	ug/kg	C	U
alpha-BHC	2.000	ug/kg	C	U	2.100	ug/kg	C	U	2.200	ug/kg	C	U
alpha-Chlordane	2.000	ug/kg	C	U	2.100	ug/kg	C	U	2.200	ug/kg	C	U
beta-BHC	2.000	ug/kg	C	U	2.100	ug/kg	C	U	2.200	ug/kg	C	U
delta-BHC	2.000	ug/kg	C	U	2.100	ug/kg	C	UJ	2.200	ug/kg	C	U
gamma-BHC (Lindane)	2.000	ug/kg	C	U	2.100	ug/kg	C	U	2.200	ug/kg	C	U
gamma-Chlordane	2.000	ug/kg	C	U	2.100	ug/kg	C	U	2.200	ug/kg	C	U

TABLE D-6B
LIME SLUDGE PONDS
TENTATIVELY IDENTIFIED COMPOUNDS
SLUDGE AND SUBSURFACE SOIL

Sample Number	Sample Location	Media	Parameter	Result	Units
114605	LSP-SB-1962	SL	azulene	14	ug/kg
114605	LSP-SB-1962	SL	propanoic acid, 2-methyl-,	170	ug/kg
114605	LSP-SB-1962	SL	pentadecane	260	ug/kg
114605	LSP-SB-1962	SL	pentacosane	340	ug/kg
114605	LSP-SB-1962	SL	pentacosane	390	ug/kg
114607	LSP-SB-1962	SL	cyclotetrasiloxane, octameth	15	ug/kg
114607	LSP-SB-1962	SL	3,5-octadiene, 4,5-diethyl-3	4	ug/kg
114607	LSP-SB-1962	SL	octacosane	3	ug/kg
114607	LSP-SB-1962	SL	iron, tricarbonyl n-(phenyl-	3	ug/kg
114607	LSP-SB-1962	SL	iron, tricarbonyl n-(phenyl-	3	ug/kg
114607	LSP-SB-1962	SL	heptacosane	3	ug/kg
114607	LSP-SB-1962	SL	heptacosane	3	ug/kg
114607	LSP-SB-1962	SL	heptacosane	3	ug/kg
114607	LSP-SB-1962	SL	hexadecane, 1-iodo-	5	ug/kg
114607	LSP-SB-1962	SL	tritetracontane	4	ug/kg
114607	LSP-SB-1962	SL	hexanedioic acid, mono(2-eth	4	ug/kg
114607	LSP-SB-1962	SL	tritetracontane	4	ug/kg
114607	LSP-SB-1962	SL	tritetracontane	4	ug/kg
114607	LSP-SB-1962	SL	tritetracontane	4	ug/kg
114607	LSP-SB-1962	SL	tritetracontane	4	ug/kg
114737	1960	SL	propanoic acid, 2-methyl-,	84	ug/kg
114737	1960	SL	tritetracontane	94	ug/kg
114737	1960	SL	dotriacontane	110	ug/kg
114737	1960	SL	tritetracontane	110	ug/kg
114737	1960	SL	tritetracontane	87	ug/kg
114737	1960	SL	dotriacontane	89	ug/kg
114737	1960	SL	2,6,10,14,18,22-tetracosahex	110	ug/kg
114743	1961	SL	propanoic acid, 2-oxo, ethy	190	ug/kg
114743	1961	SL	2-hexanone, 6-(acetyloxy)-	400	ug/kg
114743	1961	SL	hexanoic acid	140	ug/kg
114743	1961	SL	2-butanol, 3-methyl-, acetat	1200	ug/kg
114743	1961	SL	pentadecane	170	ug/kg
114743	1961	SL	decane, 6-ethyl-2-methyl-	170	ug/kg
114743	1961	SL	propanoic acid, 2-methyl-,	130	ug/kg
114743	1961	SL	octacosane	150	ug/kg
114743	1961	SL	nonacosane	130	ug/kg
114743	1961	SL	pentratriacontane	120	ug/kg
114743	1961	SL	heptacosane	120	ug/kg
114743	1961	SL	heptacosane	150	ug/kg
114743	1961	SL	heptacosane	200	ug/kg
114743	1961	SL	9-octadecenamide, (z)-	560	ug/kg
114743	1961	SL	heptacosane	160	ug/kg
114743	1961	SL	hexanedioic acid, mono(2-eth	320	ug/kg
114743	1961	SL	heptacosane	250	ug/kg
114743	1961	SL	tritetracontane	220	ug/kg
114743	1961	SL	heptacosane	270	ug/kg
114743	1961	SL	tritetracontane	430	ug/kg
114745	1961	SL	propanoic acid, 2-oxo, ethy	270	ug/kg
114745	1961	SL	2-hexanone, 6-(acetyloxy)-	650	ug/kg
114745	1961	SL	9-octadecenamide, (z)-	870	ug/kg
114745	1961	SL	hexanedioic acid, mono(2-eth	470	ug/kg
114762	1963	SL	propanoic acid, 2-oxo, ethy	190	ug/kg
114762	1963	SL	2-hexanone, 6-(acetyloxy)-	460	ug/kg
114762	1963	SL	9-octadecenamide, (z)-	940	ug/kg
114766	1963	SL	hydroperoxide, 1-methylethyl	970	ug/kg

TABLE D-6B
LIME SLUDGE PONDS
TENTATIVELY IDENTIFIED COMPOUNDS
SLUDGE AND SUBSURFACE SOIL

Sample Number	Sample Location	Media	Parameter	Result	Units
114766	1963	SL	7-oxabycyclo 4.1.0 heptane	150	ug/kg
114766	1963	SL	2-propanone, 1-(acetyloxy)-	140	ug/kg
114766	1963	SL	2-nonane, 9-(tetrahydro-2	430	ug/kg
114766	1963	SL	2-butanol, 3-methyl-, acetat	1900	ug/kg
114766	1963	SL	octacosane	140	ug/kg
114766	1963	SL	octacosane	130	ug/kg
114766	1963	SL	propanoic acid, 2-methyl-,	100	ug/kg
114766	1963	SL	heptadecane	110	ug/kg
114766	1963	SL	heptadecane	130	ug/kg
114766	1963	SL	pentadecane, 2,6,10,14-tetra	180	ug/kg
114766	1963	SL	octacosane	100	ug/kg
114766	1963	SL	hexadecane, 2,6,10,14-tetram	110	ug/kg
114766	1963	SL	nonacosane	110	ug/kg
114766	1963	SL	heptacosane	100	ug/kg
114766	1963	SL	heptacosane	100	ug/kg
114766	1963	SL	heptacosane	100	ug/kg
114766	1963	SL	hexatriacontane	120	ug/kg
114766	1963	SL	cyclotetradecanone, 2-methyl	190	ug/kg
114766	1963	SL	hexatriacontane	100	ug/kg
114766	1963	SL	dotriacontane	96	ug/kg
114814	1959	SL	2-hexanone, 6-(acetyloxy)-	360	ug/kg
114814	1959	SL	3-hexene-2-one, 5-methyl-	91	ug/kg
114814	1959	SL	hexanoic acid, anhydride	240	ug/kg
114814	1959	SL	1,3-dioxolane-2-ethanol, 2-m	89	ug/kg
114814	1959	SL	propanoic acid, 2-methyl-,	110	ug/kg
114814	1959	SL	1,2-benzenedicarboxylic acid	410	ug/kg
114814	1959	SL	eicosane, 2-methyl-	110	ug/kg
114814	1959	SL	9-octadecenamide, (z)-	310	ug/kg
114814	1959	SL	tritetracontane	230	ug/kg
114814	1959	SL	hexanedioic acid, dioctyl es	140	ug/kg
114814	1959	SL	tetratetracontane	250	ug/kg
114814	1959	SL	tritetracontane	290	ug/kg
114814	1959	SL	tritetracontane	330	ug/kg
114814	1959	SL	eicosane, 2-methyl-	210	ug/kg
114814	1959	SL	eicosane, 2-methyl-	370	ug/kg
114815	1959	SL	2-hexanone, 6-(acetyloxy)-	390	ug/kg
114815	1959	SL	3-hexene-2-one, 5-methyl-	87	ug/kg
114815	1959	SL	hexanoic acid	94	ug/kg
114815	1959	SL	2-propanol, 1,1,1-trichloro-	170	ug/kg
114815	1959	SL	iron, tricarbonyl n-phenyl-	86	ug/kg
114815	1959	SL	propanoic acid, 2-methyl-,	120	ug/kg
114815	1959	SL	1,2-benzenedicarboxylic acid	490	ug/kg
114815	1959	SL	tritetracontane	94	ug/kg
114815	1959	SL	tritetracontane	100	ug/kg
114815	1959	SL	tritetracontane	140	ug/kg
114815	1959	SL	hexanedioic acid, dioctyl es	460	ug/kg
114815	1959	SL	tritetracontane	140	ug/kg
114815	1959	SL	tritetracontane	140	ug/kg
114815	1959	SL	tritetracontane	160	ug/kg
114815	1959	SL	eicosane, 2-methyl-	230	ug/kg
114821	1958	SL	3-hexene-2-one, 5-methyl-	150	ug/kg
114821	1958	SL	1,2-benzenedicarboxylic acid	180	ug/kg
114821	1958	SL	tritetracontane	190	ug/kg
114821	1958	SL	tritetracontane	150	ug/kg
114821	1958	SL	tritetracontane	160	ug/kg
114821	1958	SL	tritetracontane	140	ug/kg
114821	1958	SL	arsenous acid, tris (trimethy	180	ug/kg

TABLE D-6B
LIME SLUDGE PONDS
TENTATIVELY IDENTIFIED COMPOUNDS
SLUDGE AND SUBSURFACE SOIL

Sample Number	Sample Location	Media	Parameter	Result	Units
114838	1957	SL	propanoic acid, 2-methyl-,	120	ug/kg
114838	1957	SL	tritetracontane	150	ug/kg
114838	1957	SL	hexanedioic acid, mono(2-eth	230	ug/kg
114838	1957	SL	tritetracontane	120	ug/kg
114838	1957	SL	tritetracontane	120	ug/kg
114838	1957	SL	tritetracontane	120	ug/kg
114838	1957	SL	tritetracontane	110	ug/kg
114838	1957	SL	eicosane, 2-methyl-	140	ug/kg
114859	1956	SL	3-pentene-2-oen, 3,4-dimetnyl	150	ug/kg
114859	1956	SL	1-hexanol, 2-ethyl-	140	ug/kg
114859	1956	SL	nonanoic acid	240	ug/kg
114859	1956	SL	propanoic acid, 2-methyl-,	160	ug/kg
114859	1956	SL	hexanedioic acid, mono(2-eth	140	ug/kg
114859	1956	SL	tritetracontane	110	ug/kg
114859	1956	SL	tritetracontane	120	ug/kg
114859	1956	SL	tritetracontane	170	ug/kg
114835	1957	SL	hexanoic acid	140	ug/kg
114835	1957	SL	hexanoic acid, anhydride	180	ug/kg
114835	1957	SL	propanoic acid, 2-methyl-,	130	ug/kg
114835	1957	SL	nonanamide	150	ug/kg
114835	1957	SL	heptanamide, 4-ethyl-5-methy	190	ug/kg
114835	1957	SL	9-octadecenamide, (z)	150	ug/kg
114835	1957	SL	tritetracontane	170	ug/kg
114835	1957	SL	tritetracontane	180	ug/kg
114835	1957	SL	tritetracontane	510	ug/kg
114835	1957	SL	dotriacontane	520	ug/kg
114835	1957	SL	hexadecane, 1-(ethenyloxy)-	150	ug/kg
114835	1957	SL	1,2-henzenedicarboxylic acid	210	ug/kg
114835	1957	SL	1,2-henzenedicarboxylic acid	180	ug/kg
114874	1963	SL	decane, 6-ethyl-2-methyl-	220	ug/kg
114874	1963	SL	propanoic acid, 2-methyl-,	250	ug/kg
114874	1963	SL	iron, tricarbonyl n-phenyl-	280	ug/kg
114874	1963	SL	heptadecane, 2,6,10,15-tetra	300	ug/kg
114874	1963	SL	eicosane, 2-methyl-	380	ug/kg
114874	1963	SL	9-octadecenamide, (z)	790	ug/kg
114874	1963	SL	eicosane, 2-methyl-	480	ug/kg
114874	1963	SL	eicosane, 2-methyl-.	690	ug/kg
114874	1963	SL	eicosane, 2-methyl-	590	ug/kg
114874	1963	SL	eicosane, 2-methyl-	200	ug/kg
114881	LSP-SS-10	SL	propanoic acid, 2-methyl-,	210	ug/kg
114767	LSP/K65 TRNCH	SB	dodecanamide	3	ug/kg
114767	LSP/K65 TRNCH	SB	hexanedioic acid, mono(2-eth	4	ug/kg
114812	1959	SB	2-hexanone, 6-(acetyloxy)-	740	ug/kg
114812	1959	SB	hexanoic acid	160	ug/kg
114812	1959	SB	2-propanol, 1,1,1-trichloro-	300	ug/kg
114812	1959	SB	1,3-dioxolane-2-ethanol, 2-m	160	ug/kg
114812	1959	SB	propanoic acid, 2-methyl-, 1	270	ug/kg
114812	1959	SB	1,2-benzenedicarboxylic acid	850	ug/kg
114812	1959	SB	hexanedioic acid, dioctyl es	420	ug/kg
114776	LSP/K65	SB	tritetracontane	91	ug/kg
114776	LSP/K65	SB	tritetracontane	90	ug/kg
114776	LSP/K65	SB	tritetracontane	90	ug/kg
114868	LSP-SS-04	SB	phenol, 2-fluoro-	140	ug/kg
114868	LSP-SS-04	SB	spiro 4.5 dec-7-ene, 1,8-dim	110	ug/kg
114868	LSP-SS-04	SB	9-octadecenamide, (z)-	530	ug/kg
114868	LSP-SS-04	SB	tritetracontane	110	ug/kg
114868	LSP-SS-04	SB	tritetracontane	130	ug/kg
114868	LSP-SS-04	SB	tritetracontane	170	ug/kg

TABLE D-6B
LIME SLUDGE PONDS
TENTATIVELY IDENTIFIED COMPOUNDS
SLUDGE AND SUBSURFACE SOIL

Sample Number	Sample Location	Media	Parameter	Result	Units
114868	LSP-SS-04	SB	bicyclo 2.2.1 heptane, 2,2,3	290	ug/kg
114868	LSP-SS-04	SB	tritetracontane	93	ug/kg
114868	LSP-SS-04	SB	tritetracontane	200	ug/kg
114868	LSP-SS-04	SB	arsenous acid, tris (trimethy	160	ug/kg
114868	LSP-SS-04	SB	arsenous acid, tris (trimethy	210	ug/kg
114773	K65 TRNCH	SB	tetradecanoic acid	420	ug/kg
114773	K65 TRNCH	SB	nonanamide	140	ug/kg
114773	K65 TRNCH	SB	tritetracontane	340	ug/kg
114773	K65 TRNCH	SB	(z)14-tricosenyl formate	410	ug/kg
114773	K65 TRNCH	SB	(z)14-tricosenyl formate	410	ug/kg
114773	K65 TRNCH	SB	tritetracontane	980	ug/kg
114773	K65 TRNCH	SB	benzo-j-fluoranthene	220	ug/kg
114773	K65 TRNCH	SB	tritetracontane	1300	ug/kg
114773	K65 TRNCH	SB	octadecane, 9-ethyl-9-heptyl	220	ug/kg
114773	K65 TRNCH	SB	arsenous acid, tris (trimethy	160	ug/kg
114773	K65 TRNCH	SB	arsenous acid, tris (trimethy	430	ug/kg
114500	LSP-SS-11	SB	1,3-dioxolane-2-propanol, 2-	600	ug/kg
114500	LSP-SS-11	SB	ethanone, 1-oxiranyl-	640	ug/kg
114500	LSP-SS-11	SB	tetratetracontane	120	ug/kg
114500	LSP-SS-11	SB	tetratetracontane	250	ug/kg
114500	LSP-SS-11	SB	hexanedioic acid, dioctyl es	2700	ug/kg
114500	LSP-SS-11	SB	tetratetracontane	220	ug/kg
114500	LSP-SS-11	SB	tetratetracontane	190	ug/kg
114500	LSP-SS-11	SB	tritetracontane	120	ug/kg
114508	LSP-SB-02	SB	3-hexen-2-one, 5-methyl-	690	ug/kg
114508	LSP-SB-02	SB	5-octen-4-one, 7-methyl-	310	ug/kg
114508	LSP-SB-02	SB	1,2-benzenedicarboxylic acid	86	ug/kg
114508	LSP-SB-02	SB	hexanedioic acid, dioctyl es	980	ug/kg
114508	LSP-SB-02	SB	tetratetracontane	210	ug/kg
114508	LSP-SB-02	SB	tetratetracontane	160	ug/kg
114508	LSP-SB-02	SB	tetratetracontane	130	ug/kg
114508	LSP-SB-02	SB	hexadecanal	110	ug/kg
114508	LSP-SB-02	SB	eicosane, 2-methyl-	210	ug/kg
114510	LSP-SB-03	SB	3-hexen-2-one, 5-methyl-	680	ug/kg
114510	LSP-SB-03	SB	4-octenoic acid, 6-ethyl-3-h	130	ug/kg
114510	LSP-SB-03	SB	1,2-benzenedicarboxylic acid	150	ug/kg
114510	LSP-SB-03	SB	tetratetracontane	200	ug/kg
114510	LSP-SB-03	SB	tetratetracontane	350	ug/kg
114510	LSP-SB-03	SB	tetratetracontane	430	ug/kg
114510	LSP-SB-03	SB	tetratetracontane	340	ug/kg
114510	LSP-SB-03	SB	tetratetracontane	200	ug/kg
114570	LSP-SB-03	SB	hexane, 2-bromo-	110	ug/kg
114570	LSP-SB-03	SB	pentacosane	250	ug/kg
114570	LSP-SB-03	SB	pentacosane	510	ug/kg
114570	LSP-SB-03	SB	pentacosane	660	ug/kg
114570	LSP-SB-03	SB	pentacosane	530	ug/kg
114570	LSP-SB-03	SB	pentacosane	380	ug/kg
114570	LSP-SB-03	SB	pentacosane	240	ug/kg
114564	LSP-SB-01	SB	3-penten-2-one	160	ug/kg
114564	LSP-SB-01	SB	cycloclorpropane, 1,1,2,2-tetram	130	ug/kg
114564	LSP-SB-01	SB	1-heptanol, 2,4-dimethyl,	87	ug/kg
114564	LSP-SB-01	SB	heptadecane, 2,6-dimethyl	140	ug/kg
114564	LSP-SB-01	SB	pentadecane	260	ug/kg
114564	LSP-SB-01	SB	octacosane	290	ug/kg
114564	LSP-SB-01	SB	heptadecane, 2,6-dimethyl	230	ug/kg
114564	LSP-SB-01	SB	pentadecane	170	ug/kg
114564	LSP-SB-01	SB	pentadecane	130	ug/kg
114564	LSP-SB-01	SB	octacosane	180	ug/kg

TABLE D-6B
LIME SLUDGE PONDS
TENTATIVELY IDENTIFIED COMPOUNDS
SLUDGE AND SUBSURFACE SOIL

Sample Number	Sample Location	Media	Parameter	Result	Units
114576	LSP-SB-07	SB	heptadecane, 2,6-dimethyl	98	ug/kg
114576	LSP-SB-07	SB	pentadecane	110	ug/kg
114576	LSP-SB-07	SB	heptadecane, 2,6-dimethyl	160	ug/kg
114576	LSP-SB-07	SB	heptadecane, 2,6-dimethyl	120	ug/kg
114576	LSP-SB-07	SB	heptadecane, 2,6-dimethyl	180	ug/kg
114576	LSP-SB-07	SB	octacosane	110	ug/kg
114600	LSP-SB-05	SB	2(5H)-furanone, 5,5-dimethyl	800	ug/kg
114600	LSP-SB-05	SB	1,2-benzenedicarboxylic acid	83	ug/kg
114600	LSP-SB-05	SB	1-octanol, 2-butyl-	72	ug/kg
114600	LSP-SB-05	SB	pentadecane	130	ug/kg
114600	LSP-SB-05	SB	heptadecane, 2,6-dimethyl	210	ug/kg
114600	LSP-SB-05	SB	heptadecane, 2,6-dimethyl	220	ug/kg
114600	LSP-SB-05	SB	octacosane	240	ug/kg
114600	LSP-SB-05	SB	pentadecane	210	ug/kg
114600	LSP-SB-05	SB	pentadecane	360	ug/kg
114600	LSP-SB-05	SB	heptadecane, 2,6-dimethyl	160	ug/kg
114600	LSP-SB-05	SB	docosane	260	ug/kg
114600	LSP-SB-05	SB	heptadecane, 2,6-dimethyl	80	ug/kg
114602	LSP-SB-06	SB	pentadecane	210	ug/kg
114602	LSP-SB-06	SB	pentadecane	410	ug/kg
114602	LSP-SB-06	SB	pentadecane	600	ug/kg
114602	LSP-SB-06	SB	benzenepropanoic acid, .alpha	140	ug/kg
114602	LSP-SB-06	SB	pentadecane	650	ug/kg
114602	LSP-SB-06	SB	pentadecane	500	ug/kg
114602	LSP-SB-06	SB	docosane	280	ug/kg
114602	LSP-SB-06	SB	octacosane	400	ug/kg
114602	LSP-SB-06	SB	heptadecane, 2,6-dimethyl	170	ug/kg
114602	LSP-SB-06	SB	heptadecane, 2,6-dimethyl	210	ug/kg

SL - sludge
SB - subsurface soil

TABLE D-7

TABLE D-7A

LIME SLUDGE PONDS
CIS SUBSURFACE SOIL RESULTS
ANALYSIS OF COMPOSITE SAMPLES
OPERABLE UNIT 2 REMEDIAL INVESTIGATION
FERNALD ENVIRONMENTAL MANAGEMENT PROJECT

SAMPLE #	PS48002			PS48015			PS48029			PS47005		
Boring	48-01			48-02			48-03			47-01		
Depth	2'-11'2"			0-12'			0-12'			22-42"		
Date	03/31/87			03/31/87			04/01/87			03/12/87		
Isotope	Uncertainty	VQ	UNITS	Uncertainty	VQ	UNITS	Uncertainty	VQ	UNITS	Uncertainty	VQ	UNITS
Cesium-137	0.6	UJ	pCi/g	0.6	UJ	pCi/g	0.5	UJ	pCi/g	1.0	UJ	pCi/g
Lead-210												
Neptunium-237	0.09	U	pCi/g	0.09	U	pCi/g	0.06	U	pCi/g	0.09	U	pCi/g
Plutonium-239/240	0.05	UJ	pCi/g	0.05	UJ	pCi/g	0.05	UJ	pCi/g	0.05	UJ	pCi/g
Plutonium-238	0.05	UJ	pCi/g	0.05	UJ	pCi/g	0.05	UJ	pCi/g	0.06	UJ	pCi/g
Ruthenium-106	5.0	UJ	pCi/g	5.0	UJ	pCi/g	5.0	UJ	pCi/g	6.0	UJ	pCi/g
Strontium-90	0.37	U	pCi/g	0.35	U	pCi/g	0.39	U	pCi/g	0.48	U	pCi/g
Technetium-99	1.20	U	pCi/g	1.00	U	pCi/g	0.70	U	pCi/g	0.80	U	pCi/g
Thorium-228	0.5±0.2	J	pCi/g	0.2±0.1	J	pCi/g	0.10	U	pCi/g	0.2±0.2	J	pCi/g
Thorium-232	0.5±0.2	J	pCi/g	0.2±0.1	J	pCi/g	0.10	U	pCi/g	0.2±0.2	J	pCi/g
Thorium-230	54±2	J	pCi/g	19±1.0	J	pCi/g	8.5±1.0	J	pCi/g	20±1.0	J	pCi/g
Uranium-234	3.1±0.8	J	pCi/g	1.8±0.3	U	pCi/g	2.0±0.3	U	pCi/g	2.5±0.2	U	pCi/g
Uranium-238	2.2±0.7	J	pCi/g	2.8±0.3	J	pCi/g	2.7±0.3	U	pCi/g	7.6±0.4	U	pCi/g
Uranium-235	0.3±0.3	J	pCi/g	0.1±0.1	U	pCi/g	0.1±0.1	U	pCi/g	0.1±0.1	U	pCi/g

000284

6508

TABLE D-7A
(Continued)

SAMPLE #	PS47010			PS47017		
Boring	47-02			47-03		
Depth	24"-46"			24"-44"		
Date	03/12/87			03/12/87		
Isotope	Uncertainty	VQ	UNITS	Uncertainty	VQ	UNITS
Cesium-137	2.0	UJ	pCi/g	0.8	UJ	pCi/g
Lead-210						
Neptunium-237	0.11	U	pCi/g	0.08	U	pCi/g
Plutonium-238	0.09	UJ	pCi/g	0.05	UJ	pCi/g
Plutonium-239/240	0.05	UJ	pCi/g	0.05	UJ	pCi/g
Ruthenium-106	6.0	UJ	pCi/g	5.0	UJ	pCi/g
Strontium-90	0.39	U	pCi/g	0.38	U	pCi/g
Technetium-99	0.90	U	pCi/g	0.90	U	pCi/g
Thorium-232	0.2±0.1	J	pCi/g	0.1±0.1	J	pCi/g
Thorium-230	5.0±0.4	J	pCi/g	1.7±0.2	J	pCi/g
Thorium-228	0.2±0.1	J	pCi/g	0.1±0.1	J	pCi/g
Uranium-234	2.5±0.2	U	pCi/g	2.1±0.2	U	pCi/g
Uranium-235	0.2±0.1	J	pCi/g	0.1±0.1	U	pCi/g
Uranium-238	2.4±0.2	U	pCi/g	2.7±0.2	U	pCi/g

000585

TABLE D-7B

LIME SLUDGE PONDS
CIS SUBSURFACE SOIL RESULTS
NON-RADIOLOGICAL DATA
OPERABLE UNIT 2 REMEDIAL INVESTIGATION
FERNALD ENVIRONMENTAL MANAGEMENT PROJECT

Analyte	Result	Validation Qualifier	Result	Validation Qualifier	Result	Validation Qualifier
	Sample No. PS-47-001 Boring 47-01		Sample No. PS-47-007 Boring 47-02		Sample No. PS-47-013 Boring 47-03	
INORGANICS (mg/kg)						
Antimony	0.9	J	0.8	J	0.7	J
Arsenic	6.3		12	-	16	-
Barium	22	J	15	J	33	J
Beryllium	0.4	U	0.3	U	0.4	J
Cadmium	4.2		2.9	-	5.3	-
Calcium	262000		260000	-	252000	-
Chromium	14		9.4	-	22	-
Cobalt	60	J	4.6	U	9.5	J
Copper	15		2.0	-	24	-
Cyanide	0.5	U	0.5	U	0.5	U
Iron	14600		8990	-	20600	-
Lead	27	J	11	J	13	J
Magnesium	19100	J	19700	J	21200	J
Manganese	617		546	-	638	-
Mercury	0.3		0.3	-	0.2	J
Nickel	12	J	11	J	23	-
Potassium	1070	J	695	J	1670	J
Selenium	0.5	U	0.5	U	0.5	U
Silver	3.2	J	2.9	J	2.6	J
Sodium	1530	J	450	J	304	J
Thallium	0.7	U	0.6	U	0.6	U
Vanadium	13	J	7.4	J	25	-
Zinc	45		38	-	75	-

TABLE D-7B
(Continued)

Analyte	Result	Validation Qualifier	Result	Validation Qualifier	Result	Validation Qualifier
	Sample No. PS-47-001 Boring 47-01		Sample No. PS-47-007 Boring 47-02		Sample No. PS-47-013 Boring 47-03	
PCBs/PESTICIDES (µg/kg)						
4,4-dde	40	U	34	U	36	U
Aldrin	20	U	17	U	18	U
Alpha-bhc	20	U	17	U	18	U
Aroclor 1016	200	U	170	U	180	U
Aroclor 1221	200	U	170	U	180	U
Aroclor 1232	200	U	170	U	180	U
Aroclor 1242	200	U	170	U	684	J
Aroclor 1248	200	U	170	U	180	U
Aroclor 1254	400	U	340	U	360	U
Aroclor 1260	400	U	340	U	360	U
Beta-bhc	20	U	17	U	18	U
Chlordane	200	U	170	U	1200	-
Delta-bhc	20	U	17	U	18	U
Dieldrin	40	U	34	U	36	U
Endosulfan I	20	U	17	U	18	U
Endosulfan II	40	U	34	U	36	U
Endosulfan Sulfate	40	U	34	U	36	U
Endrin	40	U	34	U	36	U
Endrin Ketone	40	U	34	U	36	U
Heptachlor	20	U	17	U	18	U
Heptachlor epoxide	20	U	17	U	18	U
Methoxychlor	200	U	170	U	180	U
Toxaphene	400	U	340	U	360	U
SEMI-VOLATILE ORGANICS (µg/kg)						
1,2,4-trichlorobenzene	940	U	810	U	850	U
1,2-dichlorobenzene	940	U	810	U	850	U
1,3-dichlorobenzene	940	U	810	U	850	U
1,4-dichlorobenzene	940	U	810	U	850	U
2,4,5-trichlorophenol	940	U	4100	U	4300	U

TABLE D-7B
(Continued)

Analyte	Result	Validation Qualifier	Result	Validation Qualifier	Result	Validation Qualifier
	Sample No. PS-47-001 Boring 47-01		Sample No. PS-47-007 Boring 47-02		Sample No. PS-47-013 Boring 47-03	
SEMI-VOLATILE ORGANICS (µg/kg) (Continued)						
2,4,6-trichlorophenol	940	U	810	U	850	U
2,4-dichlorophenol	940	U	810	U	850	U
2,4-dimethylphenol	940	U	810	U	850	U
2,4-dinitrophenol	4700	UJ	4100	UJ	4300	UJ
2,4-dinitrotoluene	940	U	810	U	850	U
2,6-dinitrotoluene	940	U	810	U	850	U
2-chloronaphthalene	940	U	810	U	850	U
2-chlorophenol	940	U	810	U	850	U
2-methylnaphthalene	940	U	810	U	850	U
2-methylphenol	940	U	810	U	850	U
2-nitroaniline	4700	U	4100	U	4300	U
2-nitrophenol	940	U	810	U	850	U
3,3-dichlorobenzidine	1900	U	1600	U	1700	U
3-nitroaniline	4700	U	4100	U	4300	U
4,6-dinitro-2-methylphenol	4700	U	4100	U	4300	U
4-bromophenyl phenyl ether	940	U	810	U	850	U
4-chloroaniline	940	U	810	U	850	U
4-chloro-3-methylphenol	940	U	810	U	850	U
4-methylphenol	940	U	810	U	850	U
4-nitroaniline	4700	UJ	4100	U	4300	UJ
4-nitrophenol	4700	UJ	4100	UJ	4300	UJ
Acenaphthene	940	U	810	U	850	U
Acenaphthylene	940	U	810	U	850	U
Anthracene	940	U	810	U	850	U
Benzoic acid	4700	UJ	4100	UJ	4300	UJ
Benzo(a)anthracene	940	U	810	U	850	U
Benzo(a)pyrene	940	U	810	U	850	U
Benzo(b)fluoranthene	940	U	810	U	850	U
Benzo(g,h,i)perylene	940	U	810	U	850	U

FER\CRU2RI\BJS\TABD-7B\January 6, 1995 12:33pm

TABLE D-7B
(Continued)

Analyte	Result	Validation Qualifier	Result	Validation Qualifier	Result	Validation Qualifier
	Sample No. PS-47-001 Boring 47-01		Sample No. PS-47-007 Boring 47-02		Sample No. PS-47-013 Boring 47-03	
SEMI-VOLATILE ORGANICS (μg/kg) (Continued)						
Benzo(k)fluoranthene	940	U	810	U	850	U
Benzyl alcohol	940	U	810	U	850	U
Bis(2-chloroethoxy)methane	940	U	810	U	850	U
Bis(2-chloroethyl)ether	940	U	810	U	850	U
Bis(2-chloroisopropyl)ether	940	U	810	U	850	U
Bis(2-ethylhexyl)phthalate	180	J	150	J	310	J
Bis(chloromethyl)ether	32	U	26	J	31	U
Butyl benzyl phthalate	2800	U	810	U	370	J
Chrysene	940	U	810	U	850	U
Dibenzofuran	940	U	810	U	850	U
Dibenzo(a,h)anthracene	940	U	810	U	850	U
Diethyl phthalate	940	U	810	U	850	U
Dimethyl phthalate	940	U	810	U	850	U
Di-n-butylphthalate	940	U	89	U	120	U
Di-n-octylphthalate	940	U	810	U	850	U
Fluoranthene	940	U	810	U	850	U
Fluorene	940	U	810	U	850	U
Hexachlorobenzene	940	U	810	U	850	U
Hexachlorobutadiene	940	U	810	U	850	U
Hexachlorocyclopentadiene	940	U	810	U	850	U
Hexachloroethane	940	U	810	U	850	U
Indeno(1,2,3-cd)pyrene	940	UJ	810	U	850	UJ
Isophorone	940	U	810	U	850	U
Naphthalene	940	U	810	U	850	U
Nitrobenzene	940	U	810	U	850	U
N-nitrosodiphenylamine	940	U	810	U	850	U
N-nitroso-di-n-propylamine	940	U	810	U	850	U
Pentachlorophenol	4700	U	4100	U	4300	U
Phenanthrene	940	U	810	U	850	U

TABLE D-7B
(Continued)

Analyte	Result	Validation Qualifier	Result	Validation Qualifier	Result	Validation Qualifier
	Sample No. PS-47-001 Boring 47-01		Sample No. PS-47-007 Boring 47-02		Sample No. PS-47-013 Boring 47-03	
SEMIVOLATILE ORGANICS (μg/kg)						
Phenol	940	U	810	U	610	J
Pyrene	940	UJ	810	U	850	UJ
VOLATILE ORGANICS (μg/kg)						
1,1,1-trichloroethane	16	U	13	J	16	U
1,1,2,2-tetrachloroethane	16	U	13	J	16	U
1,1,2-trichloroethane	16	U	13	U	16	U
1,1-dichloroethane	16	U	3	J	16	U
1,1-dichloroethene	16	U	13	J	16	U
1,2-dichloroethane	16	U	13	J	16	U
1,2-dichloropropane	16	U	13	U	16	U
2-butanone	32	R	13	J	16	U
2-chloroethyl vinyl ether	32	UJ	26	R	31	R
2-hexanone	32	U	26	UJ	31	UJ
4-methyl-2-pentanone	32	U	26	J	31	U
Acetone	130	J	26	J	31	U
Acrolein	32	R	150	J	20	J
Acrolein	ND	NV	26	R	31	R
Acrylonitrile	32	U	26	J	31	U
Benzene	16	U	13	J	16	U
Bromodichloromethane	16	U	13	J	16	U
Bromoform	16	U	13	J	16	U
Bromomethane	32	UJ	26	UJ	31	UJ
Carbon disulfide	9	J	7	J	9	J
Carbon tetrachloride	16	U	13	J	16	U
Chlorobenzene	16	U	13	J	16	U
Chloroethane	32	U	26	J	31	U
Chloroform	16	U	13	J	16	U
Chloromethane	32	R	26	R	31	R
Dibromochloromethane	16	U	13	J	16	U

TABLE D-7B
(Continued)

Analyte	Result	Validation Qualifier	Result	Validation Qualifier	Result	Validation Qualifier
	Sample No. PS-47-001 Boring 47-01		Sample No. PS-47-007 Boring 47-02		Sample No. PS-47-013 Boring 47-03	
VOLATILE ORGANICS (μg/kg) (Continued)						
Dichlorodifluoromethane	32	U	26	J	31	U
Ethylbenzene	16	U	13	J	16	U
Methylene chloride	21	-	26	J		
Styrene	16	U	13	J	16	U
Tetrachloroethene	16	U	13	J	16	U
Toluene	16	U	20	J	16	U
Total xylene	16	U	13	J	16	U
Trans-1,2-dichloroethene	16	U	13	J	16	U
Trichloroethene	16	U	13	J	16	U
Vinyl acetate	32	U	26	J	31	U
Vinyl chloride	32	U	26	J	31	U
	Sample No. PS-48-001 Boring 48-01		Sample No. PS-48-014 Boring 48-02		Sample No. PS-48-027 Boring 48-03	
INORGANICS (mg/kg)						
Aluminum	6020	J	4350	J	5150	J
Antimony	1.8	U	2.0	U	1.7	UJ
Arsenic	50	-	3.2	J	2.9	J
Barium	59	J	73	-	55	-
Beryllium	0.3	U	0.3	U	0.4	U
Cadmium	1.0	J	1.0	J	1.1	-
Calcium	334000	J	298000	J	30200	-
Chromium	6.9	-	6.0	-	5	-
Cobalt	3.9	U	3.8	U	3.4	U
Copper	12	U	7.3	U	6.8	U
Cyanide	1.0	R	0.9	R	0.9	UJ
Iron	6940	J	5040	J	6180	J
Lead	1.3	U	1.1	U	2.1	J
Magnesium	17700	J	15100	J	18000	-
Manganese	717	J	747	J	695	J

FER\CRU2RI\BJS\TABD-7B\January 6, 1995 12:33pm

000791

TABLE D-7B
(Continued)

Analyte	Result	Validation Qualifier	Result	Validation Qualifier	Result	Validation Qualifier
	Sample No. PS-48-001 Boring 48-01		Sample No. PS-48-014 Boring 48-02		Sample No. PS-48-027 Boring 48-03	
INORGANICS (mg/kg)						
Mercury	0.2	U	0.2	U	0.2	U
Nickel	6.2	U	6.0	U	6.5	U
Potassium	343	J	33	J	216	-
Selenium	0.4	UJ	0.4	UJ	0.6	UJ
Silver	2.3	U	2.3	U	2.4	UJ
Sodium	106	U	103	U	112	U
Thallium	0.5	U	0.5	U	0.4	UJ
Vanadium	5.8	J	2.6	U	5.0	U
Zinc	16	U	17	U	14	-
PCBs/PESTICIDES (μg/kg)						
4,4-dde	30	U	28	U	28	U
Aldrin	15	U	14	U	14	U
Alpha-bhc	15	U	14	U	14	U
Aroclor 1016	150	U	140	U	140	U
Aroclor 1221	150	U	140	U	140	U
Aroclor 1232	150	U	140	U	140	U
Aroclor 1242	150	U	140	U	140	U
Aroclor 1248	150	U	140	U	140	U
Aroclor 1254	300	U	280	U	280	U
Aroclor 1260	300	U	280	U	280	U
Beta-bhc	15	U	14	U	14	U
Chlordane	150	U	140	U	140	U
Delta-bhc	15	U	14	U	14	U
Dieldrin	30	U	28	U	28	U
Endosulfan I	15	U	14	U	14	U
Endosulfan II	30	U	28	U	28	U
Endosulfan sulfate	30	U	28	U	28	U
Endrin	30	U	28	U	28	U
Endrin ketone	30	U	28	U	28	U

TABLE D-7B
(Continued)

Analyte	Result	Validation Qualifier	Result	Validation Qualifier	Result	Validation Qualifier
	Sample No. PS-48-001 Boring 48-01		Sample No. PS-48-014 Boring 48-02		Sample No. PS-48-027 Boring 48-03	
PCBs/PESTICIDES (µg/kg)						
Heptachlor	15	U	14	U	14	U
Heptachlor epoxide	15	U	14	U	14	U
Methoxychlor	150	U	140	U	140	U
Toxaphene	300	U	280	U	280	U
SEMIVOLATILE ORGANICS (µg/kg)						
1,2,4-trichlorobenzene	690	U	640	U	670	U
1,2-dichlorobenzene	690	U	640	U	670	U
1,3-dichlorobenzene	690	U	640	U	670	U
1,4-dichlorobenzene	690	U	640	U	670	U
2,4,5-trichlorophenol	3500	UJ	3200	UJ	3400	U
2,4,6-trichlorophenol	690	U	640	U	670	U
2,4-dichlorophenol	690	U	640	U	670	U
2,4-dimethylphenol	160	UJ	640	U	670	U
2,4-dinitrophenol	3500	UJ	3200	UJ	3400	UJ
2,4-dinitrotoluene	690	U	640	U	670	U
2,6-dinitrotoluene	690	UJ	640	UJ	670	U
2-chloronaphthalene	690	UJ	640	UJ	670	U
2-chlorophenol	690	U	640	U	670	U
2-methylnaphthalene	690	U	640	U	670	U
2-methylphenol	690	U	640	U	670	U
2-nitroaniline	3500	U	3200	U	3400	U
2-nitrophenol	690	U	640	U	670	U
3,3-dichlorobenzidine	1400	U	1300	U	1300	U
3-nitroaniline	3500	UJ	3200	UJ	3400	U
4,6-dinitro-2-methylphenol	3500	UJ	3200	UJ	3400	UJ
4-bromophenyl phenyl ether	690	U	640	U	670	U
4-chloroaniline	690	U	640	U	670	U
4-chloro-3-methylphenol	690	U	640	U	670	U
4-methylphenol	690	U	640	U	670	U

TABLE D-7B
(Continued)

Analyte	Result	Validation Qualifier	Result	Validation Qualifier	Result	Validation Qualifier
	Sample No. PS-48-001 Boring 48-01		Sample No. PS-48-014 Boring 48-02		Sample No. PS-48-027 Boring 48-03	
SEMIVOLATILE ORGANICS (μg/kg) (Continued)						
4-nitroaniline	3500	UJ	3200	UJ	3400	U
4-nitrophenol	3500	U	3200	U	3400	U
acenaphthene	690	UJ	640	UJ	670	U
acenaphthylene	690	U	640	U	670	U
anthracene			640	U	670	U
Benzoic acid	160	J	3200	R	3400	R
Benzo(a)anthracene	690	U	640	U	670	U
Benzo(a)pyrene	690	U	640	U	670	U
Benzo(b)fluoranthene	690	U	640	U	670	U
Benzo(g,h,i)perylene	690	UJ	640	UJ	670	U
Benzo(k)fluoranthene	690	U	640	U	670	U
Benzyl alcohol	690	U	640	U	670	U
Bis(2-chloroethoxy)methane	690	U	640	U	670	U
Bis(2-chloroethyl)ether	690	U	640	U	670	U
Bis(2-chloroisopropyl)ether	690	U	640	U	670	U
Bis(2-ethylhexyl)phthalate	690	UJ	640	UJ	230	J
Butyl benzyl phthalate	690	U	640	U	670	U
Chrysene	690	U	640	U	670	U
Dibenzofuran	690	UJ	640	UJ	670	U
Dibenzo(a,h)anthracene	690	UJ	640	UJ	670	U
Diethyl phthalate	690	UJ	640	UJ	670	U
Dimethyl phthalate	690	UJ	640	UJ	670	U
Di-n-butylphthalate	690	U	640	UJ	670	UJ
Di-n-octylphthalate	690	U	640	U	670	U
Fluoranthene	690	U	640	U	670	U
Fluorene	690	UJ	640	UJ	670	U
Hexachlorobenzene	690	UJ	640	UJ	670	U
Hexachlorobutadiene	690	U	640	U	670	U
Hexachlorocyclopentadiene	690	UJ	640	UJ	670	U

TABLE D-7B
(Continued)

Analyte	Result	Validation Qualifier	Result	Validation Qualifier	Result	Validation Qualifier
	Sample No. PS-48-001 Boring 48-01		Sample No. PS-48-014 Boring 48-02		Sample No. PS-48-027 Boring 48-03	
SEMIVOLATILE ORGANICS (μg/kg) (Continued)						
Hexachloroethane	690	U	640	U	670	U
Indeno(1,2,3-cd)pyrene	690	UJ	640	UJ	670	U
Isophorone	690	U	640	U	670	U
Naphthalene	690	U	640	U	670	U
Nitrobenzene	690	U	640	U	670	U
N-nitrosodiphenylamine	690	U	640	U	670	U
N-nitroso-di-n-propylamine	690	U	640	U	670	U
Pentachlorophenol	3500	U	3200	U	3400	U
Phenanthrene	690	U	640	U	670	U
Phenol	89	J	640	U	670	U
Pyrene	690	U	640	U	670	R
VOLATILE ORGANICS (μg/kg)						
1,1,1-trichloroethane	310	U	310	U	270	U
1,1,2,2-tetrachloroethane	310	U	310	U	270	U
1,1,2-trichloroethane	310	U	310	U	270	U
1,1-dichloroethane	310	U	310	U	270	U
1,1-dichloroethene	310	U	310	U	270	U
1,2-dichloroethane	310	U	310	U	270	U
1,2-dichloropropane	310	U	310	U	270	U
1,3-dichloropropene	310	U	310	U	270	U
2-butanone	1800	J	610	R	530	R
2-chloroethyl vinyl ether	620	R	610	R	530	R
2-hexanone	620	U	610	U	530	U
4-methyl-2-pentanone	620	U	610	U	530	U
Acetone	620	R	610	UJ	530	UJ
Acrolein	ND	R	ND	R	ND	R
Benzene	310	U	310	U	270	U
Bromodichloromethane	310	U	310	U	270	U
Bromoform	310	U	310	U	270	U

FER\CRU2RI\BJS\TABD-7B\January 6, 1995 12:33pm

000795

TABLE D-7B
(Continued)

Analyte	Result	Validation Qualifier	Result	Validation Qualifier	Result	Validation Qualifier
	Sample No. PS-48-001 Boring 48-01		Sample No. PS-48-014 Boring 48-02		Sample No. PS-48-027 Boring 48-03	
VOLATILE ORGANICS (µg/kg) (Continued)						
Bromomethane	620	UJ	610	UJ	530	UJ
Carbon disulfide	310	U	310	U	270	U
Carbon tetrachloride	310	U	310	U	270	U
Chlorobenzene	310	U	310	U	270	U
Chloroethane	620	U	610	U	530	U
Chloroform	310	U	310	U	270	U
Chloromethane	620	U	610	U	530	U
Dibromochloromethane	310	U	310	U	270	U
Ethylbenzene	310	U	310	U	270	U
Methylene chloride	240	J	110	J	190	J
Styrene	310	U	310	U	270	U
Tetrachloroethene	310	U	310	U	270	U
Toluene	310	U	310	U	270	U
Total xylene	310	U	310	U	270	U
Trans-1,2-dichloroethene	310	U	310	U	270	U
Trichloroethene	310	U	310	U	270	U
Vinyl acetate	620	U	610	U	530	U
Vinyl chloride	620	U	610	U	530	U

000796

6508

TABLE D-8

TABLE D-8

SUBSURFACE MEDIA ANALYSIS RCRA FACILITY ASSESSMENT
NORTH LIME SLUDGE POND

ANALYTE	HAZARDOUS WASTE THRESHOLD	SAMPLE LOCATION, DEPTH (ft), AND NUMBER		
		SP-EF-1-1 0-3 920407-198	SP-EF-2-1 0-3 920407-197	SP-EF-3-1 0-1 920407-199
TCLP Metals (mg/l):				
Arsenic	5.00	<0.06	<0.06	<0.06
Barium	100.00	1.04	0.98	0.73
Cadmium	1.00	<0.02	<0.02	<0.02
Chromium	5.00	<0.24	<0.24	<0.24
Lead	5.00	<0.08	<0.08	<0.08
Mercury	0.20	<0.003	<0.003	<0.003
Selenium	1.00	<0.04	<0.04	<0.04
Silver	5.00	<0.05	<0.05	<0.05
Total Volatiles (mg/kg):				
Acetone		<1.0	<1.0	<1.0
Benzene		<0.21	<0.21	<0.21
2-Butanone		<0.62	<0.62	<0.62
Carbon Disulfide		<0.29	<0.29	<0.29
Carbon Tetrachloride		<0.38	<0.38	<0.38
Chlorobenzene		<0.46	<0.46	<0.46
Chloroethane		NR	NR	NR
Chloromethane		NR	NR	NR
Chlorinated Fluorocarbons		BDL	BDL	BDL
Cyclohexanone		BDL	BDL	BDL
o-Dichlorobenzene		<0.58	<0.58	<0.58
1,1-Dichloroethene		NR	NR	NR
1,2-Dichloroethane		NR	NR	NR
trans-1,2-Dichloroethene		NR	NR	NR
Ethyl Acetate		BDL	BDL	BDL
Ethyl Benzene		<0.21	<0.21	<0.21
Ethyl Ether		BDL	BDL	BDL
Methylene Chloride		<0.25	<0.25	<0.25
4-Methyl-2-Pentanone		<0.42	<0.42	<0.42
2-Nitropropane		BDL	BDL	BDL
Pyridine		BDL	BDL	BDL
Tetrachloroethylene		<1.20	<1.20	<1.20
Toluene		<0.42	<0.42	<0.42
1,1,1-Trichloroethane		<0.50	<0.50	<0.50
1,1,2-Trichloroethane		<0.25	<0.25	<0.25
Trichloroethene		<0.54	<0.54	<0.54
Trichlorofluromethane		<0.42	<0.42	<0.42
Trichlorotrifluoroethane		<0.42	<0.42	<0.42
Vinyl Chloride		NR	NR	NR
m,p-Xylenes		<0.25	<0.25	<0.25
o-Xylene		<0.17	<0.17	<0.17
Xylenes (Total)		NR	NR	NR

NR = Analysis not requested on this sample

TABLE D-8
(Continued)

SUBSURFACE MEDIA ANALYSIS RCRA FACILITY ASSESSMENT
NORTH LIME SLUDGE POND

ANALYTE	HAZARDOUS WASTE THRESHOLD	SAMPLE LOCATION, DEPTH (ft), AND NUMBER			
		SP-1 0-1 911122-005	SP-2 2-3 920323-085	SP-2 3-4 920323-086	SP-2 4-5 920323-087
TCLP Volatile Organics (mg/l):					
Benzene	0.50	<0.090	<0.050	<0.050	<0.050
2-Butanone	200.00	<0.250	<0.100	42 J	<0.100
Carbon Tetrachloride	0.50	<0.150	<0.050	<0.050	<0.050
Chlorobenzene	100.00	<0.190	<0.050	<0.050	<0.050
Chloroform	6.00	<0.120	<0.050	<0.050	<0.050
1,4-Dichlorobenzene	7.50	<0.350	NR	NR	NR
1,2-Dichloroethane	0.50	<0.100	<0.050	<0.050	<0.050
1,1-Dichlorethylene	0.70	<0.120	<0.050	<0.050	<0.050
Tetrachloroethylene	0.70	<0.500	<0.050	<0.050	<0.050
Trichloroethylene	0.50	<0.220	<0.050	<0.050	<0.050
Vinyl Chloride	0.20	<0.150	<0.100	<0.100	<0.100
TCLP Semi Volatiles (mg/l):					
m,p-Cresol	200.00	<0.04	<0.04	<0.04	<0.04
o-Cresol	200.00	<0.04	<0.04	<0.04	<0.04
1,4-Dichlorobenzene	7.50	NR	<0.04	<0.04	<0.04
2,4-Dinitrotoluene	0.13	<0.04	<0.04	<0.04	<0.04
Hexachlorobenzene	0.13	<0.04	<0.04	<0.04	<0.04
Hexachloroethane	3.00	<0.04	<0.04	<0.04	<0.04
Hexachloro-1,3-butadiene	0.50	<0.04	<0.04	<0.04	<0.04
Nitrobenzene	2.00	<0.04	<0.04	<0.04	<0.04
Pentachlorophenol	100.00	<0.04	<0.200	<0.200	<0.200
Pyridine	5.00	<0.08	<0.400	<0.400	<0.400
2,4,5-Trichlorophenol	400.00	<0.04	<0.04	<0.04	<0.04
2,4,6-Trichlorophenol	2.00	<0.04	<0.04	<0.04	<0.04
TCLP Pesticides (mg/l):					
Chlordane	0.030	<0.004	<0.0007	<0.0007	<0.0007
Endrin	0.020	<0.0004	<0.0003	<0.0003	<0.0003
Heptachlor	0.008	<0.0004	<0.00015	<0.00015	<0.00015
Heptachlor Epoxide	0.008	<0.0004	<0.00420	<0.00420	<0.00420
Lindane	0.400	<0.0004	<0.00020	<0.00020	<0.00020
Methoxychlor	10.000	<0.04	<0.00880	<0.00880	<0.00880
Toxaphene	0.500	<0.02	<0.00120	<0.00120	<0.00120
TCLP Herbicides (mg/l):					
2,4-D	10.00	<0.001	<0.0120	<0.0120	<0.0120
Silvex	1.00	<0.001	<0.0017	<0.0017	<0.0017

NR = Analysis not requested on this sample

000798

TABLE D-8
(Continued)

SUBSURFACE MEDIA ANALYSIS RCRA FACILITY ASSESSMENT
NORTH LIME SLUDGE POND

ANALYTE	HAZARDOUS WASTE THRESHOLD	SAMPLE LOCATION, DEPTH (ft), AND NUMBER		
		SP-INF-2	SP-INF-2	SP-INF-2
		0-1	1-2	1-2
		920319-058	920319-059	920319-060
TCLP Metals (mg/l):				
Arsenic	5.00	0.262	0.292	0.251
Barium	100.00	0.771	0.772	0.780
Cadmium	1.00	<0.100	<0.100	<0.100
Chromium	5.00	<0.500	<0.500	<0.500
Lead	5.00	0.207	0.221	0.230
Mercury	0.20	<0.0002	<0.0002	<0.0002
Selenium	1.00	<0.327	<0.327	<0.327
Silver	5.00	<0.050	<0.050	<0.050
Total Volatiles (mg/kg):				
Acetone		<0.0185	<0.0194	<0.0188
Benzene		<0.0092	<0.0097	<0.0094
2-Butanone		<0.0185	<0.0194	<0.0188
Carbon Disulfide		<0.0092	<0.0097	<0.0094
Carbon Tetrachloride		<0.0092	<0.0097	<0.0094
Chlorobenzene		<0.0092	<0.0097	<0.0094
Chloroethane		NR	NR	NR
Chloromethane		NR	NR	NR
Cyclohexanone		<0.295	<0.310	<0.301
o-Dichlorobenzene		NR	NR	NR
1,1-Dichloroethene		NR	NR	NR
1,2-Dichloroethane		NR	NR	NR
trans-1,2-Dichloroethene		NR	NR	NR
Ethyl Acetate		<0.0369	<0.0388	<0.0376
Ethyl Benzene		<0.0092	<0.0097	<0.0094
Ethyl Ether		<0.0092	<0.0097	<0.0094
Methylene Chloride		<0.0092	<0.0097	<0.0094
4-Methyl-2-Pentanone		<0.0185	<0.0194	<0.01888
2-Nitropropane		<0.129	<0.136	<0.132
Pyridine		NR	NR	NR
Tetrachloroethylene		<0.0092	<0.0097	<0.0094
Toluene		<0.0092	<0.0097	<0.0094
Trichloroethene		<0.0092	<0.0097	<0.0094
1,1,1-Trichloroethane		<0.0092	<0.0097	<0.0094
1,1,2-Trichloroethane		<0.0092	<0.0097	<0.0094
Trichlorofluoromethane		<0.0092	<0.0097	<0.0094
Trichlorotrifluoroethane		<0.0092	<0.0097	<0.0094
Vinyl Chloride		NR	NR	NR
m,p-Xylenes		NR	NR	NR
o-Xylene		NR	NR	NR
Xylenes (Total)		<0.0092	<0.0097	<0.0094

NR = Analysis not requested on this sample

TABLE D-8
(Continued)

SUBSURFACE MEDIA ANALYSIS RCRA FACILITY ASSESSMENT
NORTH LIME SLUDGE POND

ANALYTE	HAZARDOUS WASTE THRESHOLD	SAMPLE LOCATION, DEPTH (ft), AND NUMBER				
		SP-3 0-1 920323-088	SP-3 1-2 920323-089	SP-3 2-3 920323-090	SP-3 3-4 920323-091	SP-3 4-5 920323-092
TCLP Volatile Organics (mg/l):						
Benzene	0.50	<0.050	<0.050	<0.050	<0.050	<0.050
2-Butanone	200.00	<0.100	<0.100	<0.100	<0.100	<0.100
Carbon Tetrachloride	0.50	<0.050	<0.050	<0.050	<0.050	<0.050
Chlorobenzene	100.00	<0.050	<0.050	<0.050	<0.050	<0.050
Chloroform	6.00	<0.050	<0.050	<0.050	<0.050	<0.050
1,4-Dichlorobenzene	7.50	NR	NR	NR	NR	NR
1,2-Dichloroethane	0.50	<0.050	<0.050	<0.050	<0.050	<0.050
1,1-Dichlorethylene	0.70	<0.050	<0.050	<0.050	<0.050	<0.050
Tetrachloroethylene	0.70	<0.050	<0.050	<0.050	<0.050	<0.050
Trichloroethylene	0.50	<0.050	<0.050	<0.050	<0.050	<0.050
Vinyl Chloride	0.20	<0.100	<0.100	<0.100	<0.100	<0.100
TCLP Semi Volatiles (mg/l):						
m,p-Cresol	200.00	<0.04	<0.04	<0.04	<0.04	<0.04
o-Cresol	200.00	<0.04	<0.04	<0.04	<0.04	<0.04
1,4-Dichlorobenzene	7.50	<0.04	<0.04	<0.04	<0.04	<0.04
2,4-Dinitrotoluene	0.13	<0.04	<0.04	<0.04	<0.04	<0.04
Hexachlorobenzene	0.13	<0.04	<0.04	<0.04	<0.04	<0.04
Hexachloroethane	3.00	<0.04	<0.04	<0.04	<0.04	<0.04
Hexachloro-1,3-butadiene	0.50	<0.04	<0.04	<0.04	<0.04	<0.04
Nitrobenzene	2.00	<0.04	<0.04	<0.04	<0.04	<0.04
Pentachlorophenol	100.00	<0.200	<0.200	<0.200	<0.200	<0.200
Pyridine	5.00	<0.400	<0.400	<0.400	<0.400	<0.400
2,4,5-Trichlorophenol	400.00	<0.04	<0.04	<0.04	<0.04	<0.04
2,4,6-Trichlorophenol	2.00	<0.04	<0.04	<0.04	<0.04	<0.04
TCLP Pesticides (mg/l):						
Chlordane	0.030	<0.00070	<0.00070	<0.00070	<0.00070	<0.00070
Endrin	0.020	<0.00030	<0.00030	<0.00030	<0.00030	<0.00030
Heptachlor	0.008	<0.00015	<0.00015	<0.00015	<0.00015	<0.00015
Heptachlor Epoxide	0.008	<0.00420	<0.00420	<0.00420	<0.00420	<0.00420
Lindane	0.400	<0.00020	<0.00020	<0.00020	<0.00020	<0.00020
Methoxychlor	10.000	<0.00880	<0.00880	<0.00880	<0.00880	<0.00880
Toxaphene	0.500	<0.0120	<0.0120	<0.0120	<0.0120	<0.0120
TCLP Herbicides (mg/l):						
2,4-D	10.00	<0.0120	<0.0120	<0.0120	<0.0120	<0.0120
Silvex	1.00	<0.0017	<0.0017	<0.0017	<0.0017	<0.0017

NR = Analysis not requested on this sample

000800

TABLE D-8
(Continued)

SUBSURFACE MEDIA ANALYSIS RCRA FACILITY ASSESSMENT
NORTH LIME SLUDGE POND

ANALYTE	HAZARDOUS WASTE THRESHOLD	SAMPLE LOCATION, DEPTH (ft), AND NUMBER					
		SP-INF-1 0-1 920319-052	SP-INF-1 1-2 920319-053	SP-INF-1 2-3 920319-054	SP-INF-1 3-4 920319-055	SP-INF-1 4-5 920319-056	SP-INF-1 5-6 920319-057
TCLP Metals (mg/l):							
Arsenic	5.00	<0.200	<0.200	<0.200	<0.200	<0.200	0.358
Barium	100.00	0.749	0.822	0.885	0.922	0.801	0.826
Cadmium	1.00	<0.100	<0.100	<0.100	<0.100	<0.100	<0.100
Chromium	5.00	<0.500	<0.500	<0.500	<0.500	<0.500	<0.500
Lead	5.00	<0.200	<0.200	<0.200	<0.200	<0.200	0.309
Mercury	0.20	<0.0002	<0.0002	<0.0002	<0.0002	<0.0002	<0.0002
Selenium	1.00	<0.327	<0.327	<0.327	<0.327	<0.327	<0.327
Silver	5.00	<0.050	<0.050	<0.050	<0.050	<0.050	<0.050
Total Volatiles (mg/kg):							
Acetone		0.675	0.0652	0.277	<0.0204	<0.0198	<0.0211
Benzene		<0.0496	<0.0102	<0.0098	<0.0102	<0.0099	<0.0105
2-Butanone		<0.0992	<0.0204	<0.0196	<0.0204	<0.0198	<0.0211
Carbon Disulfide		<0.0496	<0.0102	<0.0098	<0.0102	<0.0099	<0.0105
Carbon Tetrachloride		<0.0496	<0.0102	<0.0098	<0.0102	<0.0099	<0.0105
Chlorobenzene		<0.0496	<0.0102	<0.0098	<0.0102	<0.0099	<0.0105
Chloroethane		NR	NR	NR	NR	NR	NR
Chloromethane		NR	NR	NR	NR	NR	NR
Chlorinated Fluorocarbons		NR	NR	NR	NR	NR	NR
Cyclohexanone		<1.587	<0.327	<0.314	<0.327	<0.316	<0.338
o-Dichlorobenzene		NR	NR	NR	NR	NR	NR
1,1-Dichloroethene		NR	NR	NR	NR	NR	NR
1,2-Dichloroethane		NR	NR	NR	NR	NR	NR
trans-1,2-Dichloroethene		NR	NR	NR	NR	NR	NR
Ethyl Acetate		<0.198	<0.0409	<0.0392	<0.0408	<0.0395	<0.0422
Ethyl Benzene		<0.0496	<0.0102	<0.0098	<0.0102	<0.0099	<0.0105
Ethyl Ether		<0.0496	<0.0102	<0.0098	<0.0102	<0.0099	<0.0105
Methylene Chloride		<0.0496	<0.0102	<0.0098	<0.0102	<0.0099	<0.0105
4-Methyl-2-Pentanone		<0.0992	<0.0204	<0.0196	<0.0204	<0.0198	<0.0211
2-Nitropropane		<0.694	<0.143	<0.137	<0.143	<0.138	<0.148
Pyridine		NR	NR	NR	NR	NR	NR
Tetrachloroethylene		<0.0496	<0.0102	<0.0098	<0.0102	<0.0099	<0.0105
Toluene		<0.0496	<0.0102	<0.0098	<0.0102	<0.0099	<0.0105
Trichloroethene		<0.0496	<0.0102	<0.0098	<0.0102	<0.0099	<0.0105
1,1,1-Trichloroethane		<0.0496	<0.0102	<0.0098	<0.0102	0.0233	<0.0105
1,1,2-Trichloroethane		<0.0496	<0.0102	<0.0098	<0.0102	<0.0099	<0.0105
Trichlorofluoromethane		<0.0496	<0.0102	<0.0098	<0.0102	<0.0099	<0.0105
Trichlorotrifluoroethane		<0.0496	<0.0102	<0.0098	<0.0102	<0.0099	<0.0105
Vinyl Chloride		NR	NR	NR	NR	NR	NR
m,p-Xylenes		NR	NR	NR	NR	NR	NR
o-Xylene		NR	NR	NR	NR	NR	NR
Xylenes (Total)		<0.0496	<0.0102	<0.0098	<0.0102	<0.0099	<0.0105

NR = Analysis not requested on this sample

TABLE D-8
(Continued)

SUBSURFACE MEDIA ANALYSIS RCRA FACILITY ASSESSMENT
NORTH LIME SLUDGE POND

ANALYTE	HAZARDOUS WASTE THRESHOLD	SAMPLE LOCATION, DEPTH (ft), AND NUMBER SP-3-1 0-1 911114-039
TCLP Volatile Organics (mg/l):		
Benzene	0.50	<0.025
2-Butanone	200.00	<0.050
Carbon Tetrachloride	0.50	<0.025
Chlorobenzene	100.00	<0.025
Chloroform	6.00	<0.025
1,4-Dichlorobenzene	7.50	NR
1,2-Dichloroethane	0.50	<0.025
1,1-Dichlorethylene	0.70	<0.025
Tetrachloroethylene	0.70	<0.025
Trichloroethylene	0.50	<0.025
Vinyl Chloride	0.20	<0.050
TCLP Semi Volatiles (mg/l):		
m,p-Cresol	200.00	<0.020
o-Cresol	200.00	<0.020
1,4-Dichlorobenzene	7.50	<0.020
2,4-Dinitrotoluene	0.13	<0.020
Hexachlorobenzene	0.13	<0.020
Hexachloroethane	3.00	<0.020
Hexachloro-1,3-butadiene	0.50	<0.020
Nitrobenzene	2.00	<0.020
Pentachlorophenol	100.00	<0.100
Pyridine	5.00	<0.020
2,4,5-Trichlorophenol	400.00	<0.020
2,4,6-Trichlorophenol	2.00	<0.020
TCLP Pesticides (mg/l):		
Chlordane	0.030	<0.0001
Endrin	0.020	<0.0001
Heptachlor	0.008	<0.00005
Heptachlor Epoxide	0.008	<0.00005
Lindane	0.400	<0.00005
Methoxychlor	10.000	<0.0005
Toxaphene	0.500	<0.001
TCLP Herbicides (mg/l):		
2,4-D	10.00	<0.001
Silvex	1.00	<0.0005

NR = Analysis not requested on this sample

000802

TABLE D-8
(Continued)

SUBSURFACE MEDIA ANALYSIS RCRA FACILITY ASSESSMENT
NORTH LIME SLUDGE POND

ANALYTE	HAZARDOUS WASTE THRESHOLD	SAMPLE LOCATION, DEPTH (ft), AND NUMBER		
		SP-11 0-7 920211-237	SP-14 0-10 920211-239	SP-14 0-10 920211-236
TCLP Metals (mg/l):				
Arsenic	5.00	<0.200	<0.200	<0.200
Barium	100.00	0.421	0.453	0.415
Cadmium	1.00	<0.100	<0.100	<0.100
Chromium	5.00	<0.500	<0.500	<0.500
Lead	5.00	0.209	0.245	0.228
Mercury	0.20	<0.0002	<0.0002	<0.0002
Selenium	1.00	<0.557	<0.557	<0.557
Silver	5.00	<0.050	<0.050	<0.050
Total Volatiles (mg/kg):				
Acetone		<0.0222	<0.0217	0.043
Benzene		<0.0111	<0.0109	<0.0118
2-Butanone		<0.0222	<0.0217	<0.0236
Carbon Disulfide		<0.0111	<0.0109	<0.0118
Carbon Tetrachloride		<0.0111	<0.0109	<0.0118
Chlorobenzene		<0.0111	<0.0109	<0.0118
Chloroethane		NR	NR	NR
Chloromethane		NR	NR	NR
Chlorinated Fluorocarbons		NR	NR	NR
Cyclohexanone		<0.3548	<0.3478	<0.378
o-Dichlorobenzene		NR	NR	NR
1,1-Dichloroethene		NR	NR	NR
1,2-Dichloroethane		NR	NR	NR
trans-1,2-Dichloroethene		NR	NR	NR
Ethyl Acetate		<0.0443	<0.0435	<0.0473
Ethyl Benzene		<0.0111	<0.0109	<0.0118
Ethyl Ether		<0.0111	<0.0109	<0.0118
Methylene Chloride		<0.0111	<0.0109	<0.0118
4-Methyl-2-Pentanone		<0.0222	<0.0217	<0.0236
2-Nitropropane		<0.1552	<0.1522	<0.1655
Pyridine		NR	NR	NR
Tetrachloroethylene		<0.0111	<0.0109	<0.0118
Toluene		<0.0111	<0.0109	0.0201
Trichloroethene		<0.0111	<0.0109	<0.0118
1,1,1-Trichloroethane		<0.0111	<0.0109	<0.0118
1,1,2-Trichloroethane		<0.0111	<0.0109	<0.0118
Trichlorofluoromethane		<0.0111	<0.0109	<0.0118
Trichlorotrifluoroethane		<0.0111	<0.0109	<0.0118
Vinyl Chloride		NR	NR	NR
m,p-Xylenes		NR	NR	NR
o-Xylene		NR	NR	NR
Xylenes (Total)		<0.0111	<0.0109	<0.0118

NR = Analysis not requested on this sample

TABLE D-8
(Continued)

SUBSURFACE MEDIA ANALYSIS RCRA FACILITY ASSESSMENT
NORTH LIME SLUDGE POND

ANALYTE	HAZARDOUS WASTE THRESHOLD	SAMPLE LOCATION, DEPTH (ft), AND NUMBER				
		SP-4 0-1 920323-093	SP-4 1-2 920323-094	SP-4 2-3 920323-095	SP-4 3-4 920323-096	SP-4 6-7 920323-097
TCLP Volatile Organics (mg/l):						
Benzene	0.50	<0.050	<0.050	<0.050	<0.050	<0.050
2-Butanone	200.00	<0.100	<0.100	<0.100	<0.100	<0.100
Carbon Tetrachloride	0.50	<0.050	<0.050	<0.050	<0.050	<0.050
Chlorobenzene	100.00	<0.050	<0.050	<0.050	<0.050	<0.050
Chloroform	6.00	<0.050	<0.050	<0.050	<0.050	<0.050
1,4-Dichlorobenzene	7.50	NR	NR	NR	NR	NR
1,2-Dichloroethane	0.50	<0.050	<0.050	<0.050	<0.050	<0.050
1,1-Dichlorethylene	0.70	<0.050	<0.050	<0.050	<0.050	<0.050
Tetrachloroethylene	0.70	<0.050	<0.050	<0.050	<0.050	<0.050
Trichloroethylene	0.50	<0.050	<0.050	<0.050	<0.050	<0.050
Vinyl Chloride	0.20	<0.100	<0.100	<0.100	<0.100	<0.100
TCLP Semi Volatiles (mg/l):						
m,p-Cresol	200.00	<0.04	<0.04	<0.04	<0.04	<0.04
o-Cresol	200.00	<0.04	<0.04	<0.04	<0.04	<0.04
1,4-Dichlorobenzene	7.50	<0.04	<0.04	<0.04	<0.04	<0.04
2,4-Dinitrotoluene	0.13	<0.04	<0.04	<0.04	<0.04	<0.04
Hexachlorobenzene	0.13	<0.04	<0.04	<0.04	<0.04	<0.04
Hexachloroethane	3.00	<0.04	<0.04	<0.04	<0.04	<0.04
Hexachloro-1,3-butadiene	0.50	<0.04	<0.04	<0.04	<0.04	<0.04
Nitrobenzene	2.00	<0.04	<0.04	<0.04	<0.04	<0.04
Pentachlorophenol	100.00	<0.20	<0.20	<0.20	<0.20	<0.20
Pyridine	5.00	<0.40	<0.40	<0.40	<0.40	<0.40
2,4,5-Trichlorophenol	400.00	<0.04	<0.04	<0.04	<0.04	<0.04
2,4,6-Trichlorophenol	2.00	<0.04	<0.04	<0.04	<0.04	<0.04
TCLP Pesticides (mg/l):						
Chlordane	0.030	<0.00070	<0.00070	<0.00070	<0.00070	<0.00070
Endrin	0.020	<0.00030	<0.00030	<0.00030	<0.00030	<0.00030
Heptachlor	0.008	<0.00015	<0.00015	<0.00015	<0.00015	<0.00015
Heptachlor Epoxide	0.008	<0.00420	<0.00420	<0.00420	<0.00420	<0.00420
Lindane	0.400	<0.00020	<0.00020	<0.00020	<0.00020	<0.00020
Methoxychlor	10.000	<0.00880	<0.00880	<0.00880	<0.00880	<0.00880
Toxaphene	0.500	<0.0120	<0.0120	<0.0120	<0.0120	<0.0120
TCLP Herbicides (mg/l):						
2,4-D	10.00	<0.0120	<0.0120	<0.0120	<0.0120	<0.0120
Silvex	1.00	<0.0017	<0.0017	<0.0017	<0.0017	<0.0017

NR = Analysis not requested on this sample

000804

TABLE D-8
(Continued)

SUBSURFACE MEDIA ANALYSIS RCRA FACILITY ASSESSMENT
NORTH LIME SLUDGE POND

ANALYTE	HAZARDOUS WASTE THRESHOLD	SAMPLE LOCATION, DEPTH (ft), AND NUMBER				
		SP-10-1 0-1 920407-192	SP-10-2 1-2 920407-193	SP-10-2A 1-2 920407-195	SP-10-3 2-3 920407-195	SP-10-4 3-4 920407-196
TCLP Metals (mg/l):						
Arsenic	5.00	<0.06	<0.06	<0.06	<0.06	<0.06
Barium	100.00	0.54	0.48	0.54	<0.20	1.17
Cadmium	1.00	<0.02	<0.02	<0.02	<0.02	<0.02
Chromium	5.00	<0.24	<0.24	<0.24	<0.24	<0.24
Lead	5.00	<0.08	<0.08	<0.08	0.41	<0.08
Mercury	0.20	<0.003	<0.003	<0.003	<0.003	0.004
Selenium	1.00	<0.04	<0.04	<0.04	<0.04	<0.04
Silver	5.00	<0.05	<0.05	<0.05	<0.05	<0.05
Total Volatiles (mg/kg):						
Acetone		<1.0	<1.0	<1.0	<1.0	<1.0
Benzene		<0.21	<0.21	<0.21	<0.21	<0.21
2-Butanone		<0.62	<0.62	<0.62	<0.62	<0.62
Carbon Disulfide		<0.29	<0.29	<0.29	<0.29	<0.29
Carbon Tetrachloride		<0.38	<0.58	<0.38	<0.38	<0.38
Chlorobenzene		<0.46	<0.46	<0.46	<0.46	<0.46
Chloroethane		NR	NR	NR	NR	NR
Chloromethane		NR	NR	NR	NR	NR
Chlorinated Fluorocarbons		BDL	BDL	BDL	BDL	BDL
Cyclohexanone		BDL	BDL	BDL	BDL	BDL
o-Dichlorobenzene		<0.58	<0.58	<0.58	<0.58	<0.58
1,1-Dichloroethene		NR	NR	NR	NR	NR
1,2-Dichloroethane		NR	NR	NR	NR	NR
trans-1,2-Dichloroethene		NR	NR	NR	NR	NR
Ethyl Acetate		BDL	BDL	BDL	BDL	BDL
Ethyl Benzene		<0.21	<0.21	<0.21	<0.21	<0.21
Ethyl Ether		BDL	BDL	BDL	BDL	BDL
Methylene Chloride		<0.25	<0.25	<0.25	<0.25	<0.25
4-Methyl-2-Pentanone		<0.42	<0.42	<0.42	<0.42	<0.42
2-Nitropropane		BDL	BDL	BDL	BDL	BDL
Pyridine		BDL	BDL	BDL	BDL	BDL
Tetrachloroethylene		<1.20	<1.20	<1.20	<1.20	<1.20
Toluene		<0.42	<0.42	<0.42	<0.42	<0.42
Trichloroethene		<0.54	<0.54	<0.54	<0.54	<0.54
1,1,1-Trichloroethane		<0.50	<0.50	<0.50	<0.50	<0.50
1,1,2-Trichloroethane		<0.25	<0.25	<0.25	<0.25	<0.25
Trichlorofluoromethane		<0.42	<0.42	<0.42	<0.42	<0.42
Trichlorotrifluoroethane		<0.42	<0.42	<0.42	<0.42	<0.42
Vinyl Chloride		NR	NR	NR	NR	NR
m,p-Xylenes		<0.25	<0.25	<0.25	<0.25	<0.25
o-Xylene		<0.17	<0.17	<0.17	<0.17	<0.17
Xylenes (Total)		NR	NR	NR	NR	NR

NR = Analysis not requested on this sample

TABLE D-8
(Continued)

SUBSURFACE MEDIA ANALYSIS RCRA FACILITY ASSESSMENT
NORTH LIME SLUDGE POND

ANALYTE	HAZARDOUS WASTE THRESHOLD	SAMPLE LOCATION, DEPTH (ft), AND NUMBER				
		SP-10-1 0-1 920407-192	SP-10-2 1-2 920407-193	SP-10-2A 1-2 920407-194	SP-10-3 2-3 920407-195	SP-10-4 3-4 920407-196
TCLP Volatile Organics (mg/l):						
Benzene	0.50	<0.09	<0.09	<0.09	<0.09	<0.09
2-Butanone	200.00	<0.25	<0.25	<0.25	<0.25	<0.25
Carbon Tetrachloride	0.50	<0.15	<0.15	<0.15	<0.15	<0.15
Chlorobenzene	100.00	<0.19	<0.19	<0.19	<0.19	<0.19
Chloroform	6.00	<0.12	<0.12	<0.12	<0.12	<0.12
1,4-Dichlorobenzene	7.50	<0.35	<0.35	<0.35	<0.35	<0.35
1,2-Dichloroethane	0.50	<0.10	<0.10	<0.10	<0.10	<0.10
1,1-Dichloroethylene	0.70	<0.12	<0.12	<0.12	<0.12	<0.12
Tetrachloroethylene	0.70	<0.50	<0.50	<0.50	<0.50	<0.50
Trichloroethylene	0.50	<0.22	<0.22	<0.22	<0.22	<0.22
Vinyl Chloride	0.20	<0.15	<0.15	<0.15	<0.15	<0.15
TCLP Semi Volatiles (mg/l):						
m,p-Cresol	200.00	<0.04	<0.04	<0.04	<0.04	<0.04
o-Cresol	200.00	<0.04	<0.04	<0.04	<0.04	<0.04
1,4-Dichlorobenzene	7.50	NR	NR	NR	NR	NR
2,4-Dinitrotoluene	0.13	<0.04	<0.04	<0.04	<0.04	<0.04
Hexachlorobenzene	0.13	<0.04	<0.04	<0.04	<0.04	<0.04
Hexachloroethane	3.00	<0.04	<0.04	<0.04	<0.04	<0.04
Hexachloro-1,3-butadiene	0.50	<0.04	<0.04	<0.04	<0.04	<0.04
Nitrobenzene	2.00	<0.04	<0.04	<0.04	<0.04	<0.04
Pentachlorophenol	100.00	<0.04	<0.04	<0.04	<0.04	<0.04
Pyridine	5.00	<0.08	<0.08	<0.08	<0.08	<0.08
2,4,6-Trichlorophenol	0.50	<0.04	<0.04	<0.04	<0.04	<0.04
2,4,5-Trichlorophenol	2.00	<0.04	<0.04	<0.04	<0.04	<0.04
TCLP Pesticides (mg/l):						
Chlordane	0.030	<0.004	<0.004	<0.004	<0.004	<0.004
Endrin	0.020	<0.0004	<0.0004	<0.0004	<0.0004	<0.0004
Heptachlor	0.008	<0.0004	<0.0004	<0.0004	<0.0004	<0.0004
Heptachlor Epoxide	0.008	<0.0004	<0.0004	<0.0004	<0.0004	<0.0004
Lindane	0.400	<0.0004	<0.0004	<0.0004	<0.0004	<0.0004
Methoxychlor	10.000	<0.0004	<0.0004	<0.0004	<0.0004	<0.0004
Toxaphene	0.500	<0.02	<0.02	<0.02	<0.02	<0.02
TCLP Herbicides (mg/l):						
2,4-D	10.00	<0.001	<0.001	<0.001	<0.001	<0.001
Silvex	1.00	<0.001	<0.001	<0.001	<0.001	<0.001

000806

TABLE D-8
(Continued)

SUBSURFACE MEDIA ANALYSIS RCRA FACILITY ASSESSMENT
NORTH LIME SLUDGE POND

ANALYTE	HAZARDOUS WASTE THRESHOLD	SAMPLE LOCATION, DEPTH (ft), AND NUMBER				
		SP-4 0-1 920323-093	SP-4 1-2 920323-094	SP-4 2-3 920323-095	SP-4 3-4 920323-096	SP-4 6-7 920323-097
TCLP Metals (mg/l):						
Arsenic	5.00	<0.500	<0.500	<0.500	<0.500	<0.050
Barium	100.00	0.482	0.384	0.554	0.999	0.427
Cadmium	1.00	<0.010	<0.010	<0.010	<0.010	<0.010
Chromium	5.00	<0.025	<0.025	<0.025	<0.025	<0.025
Lead	5.00	<0.100	<0.100	<0.100	<0.100	<0.100
Mercury	0.20	<0.0002	<0.0002	<0.0002	<0.0002	<0.0002
Selenium	1.00	<0.500	<0.500	<0.500	<0.500	<0.500
Silver	5.00	<0.020	<0.020	<0.020	<0.020	<0.020
Total Volatiles (mg/kg):						
Acetone		0.011 B	0.009 BJ	0.010 B	0.008 B	0.009 BJ
Benzene		<0.005	<0.005	<0.005	<0.005	<0.005
2-Butanone		<0.010	<0.010	<0.010	<0.010	<0.010
Carbon Disulfide		<0.005	<0.005	<0.005	<0.005	<0.005
Carbon Tetrachloride		<0.005	<0.005	<0.005	<0.005	<0.005
Chlorobenzene		<0.005	<0.005	<0.005	<0.005	<0.005
Chloroethane		<0.010	<0.010	<0.010	<0.010	<0.010
Chloromethane		<0.010	<0.010	<0.010	<0.010	<0.010
Chlorinated Fluorocarbons		NR	NR	NR	NR	NR
Cyclohexanone		NR	NR	NR	NR	NR
o-Dichlorobenzene		NR	NR	NR	NR	NR
1,1-Dichloroethene		<0.005	<0.005	<0.005	<0.005	<0.005
1,2-Dichloroethane		<0.005	<0.005	<0.005	<0.005	<0.005
trans-1,2-Dichloroethene		<0.005	<0.005	<0.005	<0.005	<0.005
Ethyl Acetate		NR	NR	NR	NR	NR
Ethyl Benzene		<0.005	<0.005	<0.005	<0.005	<0.005
Ethyl Ether		NR	NR	NR	NR	NR
Methylene Chloride		0.001 BJ	0.011 BJ	0.001 BJ	0.001 BJ	0.001 BJ
Methyl-2-Pentanone		<0.010	<0.010	<0.010	<0.010	<0.010
2-Nitropropane		NR	NR	NR	NR	NR
Pyridine		NR	NR	NR	NR	NR
Tetrachloroethylene		<0.005	<0.005	<0.005	<0.005	<0.005
Toluene		<0.005	<0.010	<0.005	<0.005	<0.005
Trichloroethene		<0.005	<0.005	<0.005	<0.005	<0.005
1,1,1-Trichloroethane		<0.005	<0.005	<0.005	<0.005	<0.005
1,1,2-Trichloroethane		<0.005	<0.005	<0.005	<0.005	<0.005
Trichlorofluromethane		<0.010	<0.010	<0.010	<0.010	<0.010
Trichlorotrifluoroethane		NR	NR	NR	NR	NR
Vinyl Chloride		<0.010	<0.010	<0.010	<0.010	<0.010
m,p-Xylenes		NR	NR	NR	NR	NR
o-Xylene		NR	NR	NR	NR	NR
Xylenes (Total)		<0.005	<0.005	<0.005	<0.005	<0.005

NR = Analysis not requested on this sample

TABLE D-8
(Continued)

SUBSURFACE MEDIA ANALYSIS RCRA FACILITY ASSESSMENT
NORTH LIME SLUDGE POND

ANALYTE	HAZARDOUS WASTE THRESHOLD	SAMPLE LOCATION, DEPTH (ft), AND NUMBER		
		SP-11 0-7 920211-237	SP-14 0-10 920211-239	SP-14 0-10 920211-236
TCLP Volatile Organics (mg/l):				
Benzene	0.50	<0.025	<0.025	<0.025
2-Butanone	200.00	<0.050	<0.050	<0.050
Carbon Tetrachloride	0.50	<0.025	<0.025	<0.025
Chlorobenzene	100.00	<0.025	<0.025	<0.025
Chloroform	6.00	<0.025	<0.025	<0.025
1,4-Dichlorobenzene	7.50	NR	NR	NR
1,2-Dichloroethane	0.50	<0.025	<0.025	<0.025
1,1-Dichlorethylene	0.70	<0.025	<0.025	<0.025
Tetrachloroethylene	0.70	<0.025	<0.025	<0.025
Trichloroethylene	0.50	<0.025	<0.025	<0.025
Vinyl Chloride	0.20	<0.050	<0.050	<0.050
TCLP Semi Volatiles (mg/l):				
m,p-Cresol	200.00	<0.020	<0.020	<0.020
o-Cresol	200.00	<0.020	<0.020	<0.020
1,4-Dichlorobenzene	7.50	<0.020	<0.020	<0.020
2,4-Dinitrotoluene	0.13	<0.020	<0.020	<0.020
Hexachlorobenzene	0.13	<0.020	<0.020	<0.020
Hexachloroethane	3.00	<0.020	<0.020	<0.020
Hexachloro-1,3-butadiene	0.50	<0.020	<0.020	<0.020
Nitrobenzene	2.00	<0.020	<0.020	<0.020
Pentachlorophenol	100.00	<0.100	<0.100	<0.100
Pyridine	5.00	<0.020	<0.020	<0.020
2,4,5-Trichlorophenol	400.00	<0.020	<0.020	<0.020
2,4,6-Trichlorophenol	2.00	<0.020	<0.020	<0.020
TCLP Pesticides (mg/l):				
Chlordane	0.030	<0.0001	<0.001	<0.0001
Endrin	0.020	<0.0001	<0.001	<0.0001
Heptachlor	0.008	<0.00005	<0.00005	<0.00005
Heptachlor Epoxide	0.008	<0.00005	<0.00005	<0.00005
Lindane	0.400	<0.00005	<0.00005	<0.00005
Methoxychlor	10.000	<0.005	<0.005	<0.0005
Toxaphene	0.500	<0.001	<0.001	<0.001
TCLP Herbicides (mg/l):				
2,4-D	10.00	<0.001	<0.001	<0.001
Silvex	1.00	<0.0005	<0.0005	<0.0005

NR = Analysis not requested on this sample

000808

TABLE D-8
(Continued)

SUBSURFACE MEDIA ANALYSIS RCRA FACILITY ASSESSMENT
NORTH LIME SLUDGE POND

ANALYTE	HAZARDOUS WASTE THRESHOLD	SAMPLE LOCATION, DEPTH (ft), AND NUMBER SP-3-1 0-1 911114-039
TCLP Metals (mg/l):		
Arsenic	5.00	<0.2
Barium	100.00	0.518
Cadmium	1.00	<0.1
Chromium	5.00	<0.5
Lead	5.00	0.266
Mercury	0.20	<0.0002
Selenium	1.00	<0.374
Silver	5.00	<0.050
Total Volatiles (mg/kg):		
Acetone		<0.0186
Benzene		<0.0093
2-Butanone		<0.0186
Carbon Disulfide		<0.0093
Carbon Tetrachloride		<0.0093
Chlorobenzene		<0.0093
Chloroethane		NR
Chloromethane		NR
Chlorinated Fluorocarbons		NR
Cyclohexanone		<0.298
o-Dichlorobenzene		NR
1,1-Dichloroethene		NR
1,2-Dichloroethane		NR
trans-1,2-Dichloroethene		NR
Ethyl Acetate		<0.0372
Ethyl Benzene		<0.0093
Ethyl Ether		<0.0093
Methylene Chloride		<0.0093
Methyl Isobutyl Ketone		<0.0186
2-Nitropropane		<0.130
Pyridine		NR
Tetrachloroethylene		<0.0093
Toluene		<0.0093
Trichloroethene		<0.0093
1,1,1-Trichloroethane		<0.0093
1,1,2-Trichloroethane		<0.0093
Trichlorofluoromethane		<0.0093
Trichlorotrifluoroethane		<0.0093
Vinyl Chloride		NR
m,p-Xylenes		NR
o-Xylene		NR
Xylenes (Total)		<0.0093

NR = Analysis not requested on this sample

TABLE D-8
(Continued)

SUBSURFACE MEDIA ANALYSIS RCRA FACILITY ASSESSMENT
NORTH LIME SLUDGE POND

ANALYTE	HAZARDOUS WASTE THRESHOLD	SAMPLE LOCATION, DEPTH (ft), AND NUMBER					
		SP-INF-1 0-1 920319-052	SP-INF-1 1-2 920319-053	SP-INF-1 2-3 920319-054	SP-INF-1 3-4 920319-055	SP-INF-1 4-5 920319-056	SP-INF-1 5-6 920319-057
TCLP Volatile Organics (mg/l):							
Benzene	0.50	<0.025	<0.025	<0.025	<0.025	<0.025	<0.025
2-Butanone	200.00	<0.050	<0.050	<0.050	<0.050	<0.050	<0.050
Carbon Tetrachloride	0.50	<0.025	<0.025	<0.025	<0.025	<0.025	<0.025
Chlorobenzene	100.00	<0.025	<0.025	<0.025	<0.025	<0.025	<0.025
Chloroform	6.00	<0.025	<0.025	<0.025	<0.025	<0.025	<0.025
1,4-Dichlorobenzene	7.50	NR	NR	NR	NR	NR	NR
1,2-Dichloroethane	0.50	<0.025	<0.025	<0.025	<0.025	<0.025	<0.025
1,1-Dichlorethylene	0.70	<0.025	<0.025	<0.025	<0.025	<0.025	<0.025
Tetrachloroethylene	0.70	<0.025	<0.025	<0.025	<0.025	<0.025	<0.025
Trichloroethylene	0.50	<0.025	<0.025	<0.025	<0.025	<0.025	<0.025
Vinyl Chloride	0.20	<0.050	<0.050	<0.050	<0.050	<0.050	<0.050
TCLP Semi Volatiles (mg/l):							
m,p-Cresol	200.00	<0.020	<0.020	<0.020	<0.020	<0.020	<0.020
o-Cresol	200.00	<0.020	<0.020	<0.020	<0.020	<0.020	<0.020
1,4-Dichlorobenzene	7.50	<0.020	<0.020	<0.020	<0.020	<0.020	<0.020
2,4-Dinitrotoluene	0.13	<0.020	<0.020	<0.020	<0.020	<0.020	<0.020
Hexachlorobenzene	0.13	<0.020	<0.020	<0.020	<0.020	<0.020	<0.020
Hexachloroethane	3.00	<0.020	<0.020	<0.020	<0.020	<0.020	<0.020
Hexachloro-1,3-butadiene	0.50	<0.020	<0.020	<0.020	<0.020	<0.020	<0.020
Nitrobenzene	2.00	<0.020	<0.020	<0.020	<0.020	<0.020	<0.020
Pentachlorophenol	100.00	<0.100	<0.100	<0.100	<0.100	<0.100	<0.100
Pyridine	5.00	<0.020	<0.020	<0.020	<0.020	<0.020	<0.020
2,4,5-Trichlorophenol	400.00	<0.020	<0.020	<0.020	<0.020	<0.020	<0.020
2,4,6-Trichlorophenol	2.00	<0.020	<0.020	<0.020	<0.020	<0.020	<0.020
TCLP Pesticides (mg/l):							
Chlordane	0.030	<0.0001	<0.0001	<0.0001	<0.0001	<0.0001	<0.0001
Endrin	0.020	<0.0001	<0.0001	<0.0001	<0.0001	<0.0001	<0.0001
Heptachlor	0.008	<0.00005	<0.00005	<0.00005	<0.00005	<0.00005	<0.00005
Heptachlor Epoxide	0.008	<0.00005	<0.00005	<0.00005	<0.00005	<0.00005	<0.00005
Lindane	0.400	<0.00005	<0.00005	<0.00005	<0.00005	<0.00005	<0.00005
Methoxychlor	10.000	<0.0005	<0.0005	<0.0005	<0.0005	<0.0005	<0.0005
Toxaphene	0.500	<0.001	<0.001	<0.001	<0.001	<0.001	<0.001
TCLP Herbicides (mg/l):							
2,4-D	10.00	<0.001	<0.001	<0.001	<0.001	<0.001	<0.001
Silvex	1.00	<0.0005	<0.0005	<0.0005	<0.0005	<0.0005	<0.0005

NR = Analysis not requested on this sample

000810

TABLE D-8
(Continued)

SUBSURFACE MEDIA ANALYSIS RCRA FACILITY ASSESSMENT
NORTH LIME SLUDGE POND

ANALYTE	HAZARDOUS WASTE THRESHOLD	SAMPLE LOCATION, DEPTH (ft), AND NUMBER				
		SP-3 0-1 920323-088	SP-3 1-2 920323-089	SP-3 2-3 920323-090	SP-3 3-4 920323-091	SP-3 4-5 920323-092
TCLP Metals (mg/l):						
Arsenic	5.00	<0.500	<0.050	<0.050	<0.050	<0.050
Barium	100.00	0.406	0.461	0.484	0.582	0.660
Cadmium	1.00	<0.010	<0.010	<0.010	<0.010	<0.010
Chromium	5.00	<0.025	<0.025	<0.025	<0.025	<0.025
Lead	5.00	<0.100	<0.100	<0.100	<0.100	<0.100
Mercury	0.20	<0.0002	<0.0002	<0.0002	<0.0002	<0.0002
Selenium	1.00	<0.500	<0.500	<0.500	<0.500	<0.500
Silver	5.00	<0.020	<0.020	<0.020	<0.020	<0.020
Total Volatiles (mg/kg):						
Acetone		0.013 B	0.008 BJ	0.011 B	0.011 B	0.015 B
Benzene		<0.005	<0.005	<0.005	<0.005	<0.005
2-Butanone		<0.010	<0.010	<0.010	<0.010	0.001 J
Carbon Disulfide		<0.005	<0.005	<0.005	<0.005	<0.005
Carbon Tetrachloride		<0.005	<0.005	<0.005	<0.005	<0.005
Chlorobenzene		<0.005	<0.005	<0.005	<0.005	<0.005
Chloroethane		<0.010	<0.010	<0.010	<0.010	<0.010
Chloromethane		<0.010	<0.010	<0.010	<0.010	<0.010
Chlorinated Fluorocarbons		NR	NR	NR	NR	NR
Cyclohexanone		NR	NR	NR	NR	NR
o-Dichlorobenzene		NR	NR	NR	NR	NR
1,1-Dichloroethene		<0.005	<0.005	<0.005	<0.005	<0.005
1,2-Dichloroethane		<0.005	<0.005	<0.005	<0.005	<0.005
trans-1,2-Dichloroethene		<0.005	<0.005	<0.005	<0.005	<0.005
Ethyl Acetate		NR	NR	NR	NR	NR
Ethyl Ether		NR	NR	NR	NR	NR
Ethyl Benzene		<0.005	<0.005	<0.005	<0.005	<0.005
Methylene Chloride		0.001 BJ	0.001 BJ	0.001 BJ	0.001 BJ	0.002 BJ
4-Methyl-2-Pentanone		<0.010	<0.010	<0.010	<0.010	<0.010
2-Nitropropane		NR	NR	NR	NR	NR
Pyridine		NR	NR	NR	NR	NR
Tetrachloroethylene		<0.005	<0.005	<0.005	<0.005	<0.005
Toluene		<0.005	<0.005	<0.005	<0.005	<0.005
Trichloroethene		<0.005	<0.005	<0.005	<0.005	<0.005
1,1,1-Trichloroethane		<0.005	<0.005	<0.005	<0.005	<0.005
1,1,2-Trichloroethane		<0.005	<0.005	<0.005	<0.005	<0.005
Trichloroflurometh ane		<0.010	<0.010	<0.010	<0.010	<0.010
Trichlorotrifluoroethane		NR	NR	NR	NR	NR
Vinyl Chloride		<0.010	<0.010	<0.010	<0.010	<0.010
m,p-Xylenes		NR	NR	NR	NR	NR
o-Xylene		NR	NR	NR	NR	NR
Xylenes (Total)		<0.005	<0.005	<0.005	<0.005	<0.005

NR = Analysis not requested on this sample

TABLE D-8
(Continued)

SUBSURFACE MEDIA ANALYSIS RCRA FACILITY ASSESSMENT
NORTH LIME SLUDGE POND

ANALYTE	HAZARDOUS WASTE THRESHOLD	SAMPLE LOCATION, DEPTH (ft), AND NUMBER		
		SP-INF-2 0-1 920319-058	SP-INF-2 1-2 920319-059	SP-INF-2 1-2 920319-060
TCLP Volatile Organics (mg/l):				
Benzene	0.50	<0.025	<0.025	<0.025
2-Butanone	200.00	<0.050	<0.050	<0.050
Carbon Tetrachloride	0.50	<0.025	<0.025	<0.025
Chlorobenzene	100.00	<0.025	<0.025	<0.025
Chloroform	6.00	<0.025	<0.025	<0.025
1,4-Dichlorobenzene	7.50	NR	NR	NR
1,2-Dichloroethane	0.50	<0.025	<0.025	<0.025
1,1-Dichlorethylene	0.70	<0.025	<0.025	<0.025
Tetrachloroethylene	0.70	<0.025	<0.025	<0.025
Trichloroethylene	0.50	<0.025	<0.025	<0.025
Vinyl Chloride	0.20	<0.050	<0.050	<0.050
TCLP Semi Volatiles (mg/l):				
m,p-Cresol	200.00	<0.020	<0.020	<0.020
o-Cresol	200.00	<0.020	<0.020	<0.020
1,4-Dichlorobenzene	7.50	<0.020	<0.020	<0.020
2,4-Dinitrotoluene	0.13	<0.020	<0.020	<0.020
Hexachlorobenzene	0.13	<0.020	<0.020	<0.020
Hexachloroethane	3.00	<0.020	<0.020	<0.020
Hexachloro-1,3-butadiene	0.50	<0.020	<0.020	<0.020
Nitrobenzene	2.00	<0.020	<0.020	<0.020
Pentachlorophenol	100.00	<0.100	<0.100	<0.100
Pyridine	5.00	<0.020	<0.020	<0.020
2,4,5-Trichlorophenol	400.00	<0.020	<0.020	<0.020
2,4,6-Trichlorophenol	2.00	<0.020	<0.020	<0.020
TCLP Pesticides (mg/l):				
Chlordane	0.030	<0.0001	<0.0001	<0.0001
Endrin	0.020	<0.0001	<0.0001	<0.0001
Heptachlor	0.008	<0.00005	<0.00005	<0.00005
Heptachlor Epoxide	0.008	<0.00005	<0.00005	<0.00005
Lindane	0.400	<0.00005	<0.00005	<0.00005
Methoxychlor	10.000	<0.0005	<0.0005	<0.0005
Toxaphene	0.500	<0.001	<0.001	<0.001
TCLP Herbicides (mg/l):				
2,4-D	10.00	<0.001	<0.001	<0.001
Silvex	1.00	<0.0005	<0.0005	<0.0005

NR = Analysis not requested on this sample

000512

TABLE D-8
(Continued)

SUBSURFACE MEDIA ANALYSIS RCRA FACILITY ASSESSMENT
NORTH LIME SLUDGE POND

ANALYTE	HAZARDOUS WASTE THRESHOLD	SAMPLE LOCATION, DEPTH (ft), AND NUMBER			
		SP-1 0-1 911122-005	SP-2 2-3 920323-085	SP-2 3-4 920323-086	SP-2 4-5 920323-087
TCLP Metals (mg/l):					
Arsenic	5.00	<0.03	<0.500	<0.500	<0.500
Barium	100.00	0.40	0.409	0.589	0.609
Cadmium	1.00	<0.02	<0.010	<0.010	<0.010
Chromium	5.00	<0.24	<0.025	<0.025	<0.025
Lead	5.00	<0.08	<0.100	<0.100	<0.100
Mercury	0.20	<0.003	<0.0002	<0.0002	<0.0002
Selenium	1.00	<0.02	<0.500	<0.500	<0.500
Silver	5.00	<0.05	<0.020	<0.020	<0.020
Total Volatiles (mg/kg):					
Acetone		<1.0	0.550 B		0.031 B
Benzene		<0.21	0.006 J		<0.005
2-Butanone		<0.63	0.008 BJ		<0.010
Carbon Disulfide		<0.30	<0.025		<0.005
Carbon Tetrachloride		<0.38	<0.025		<0.005
Chlorobenzene		<0.46	<0.025		<0.005
Chloroethane		NR	<0.050		<0.010
Chloromethane		NR	<0.050		<0.010
Chlorinated Fluorocarbons		BDL	NR		NR
Cyclohexanone		BDL	NR		NR
o-Dichlorobenzene		<0.58	NR		NR
1,1-Dichloroethene		NR	<0.025		<0.005
1,2-Dichloroethane		NR	<0.025		<0.005
trans-1,2-Dichloroethene		NR	<0.025		<0.005
Ethyl Acetate		BDL	NR		NR
Ethyl Benzene		<0.21	0.020 J		<0.005
Ethyl Ether		BDL	NR		NR
Methylene Chloride		<0.25	0.011 BJ		0.002 BJ
4-Methyl-2-Pentanone		<0.42	<0.050		<0.010
2-Nitropropane		BDL	NR		NR
Pyridine		BDL	NR		NR
Tetrachloroethylene		<1.2	<0.025		<0.005
Toluene		<0.42	<0.009		<0.005
Trichloroethene		<0.54	<0.025		<0.005
1,1,1-Trichloroethane		<0.50	0.006 J		<0.005
1,1,2-Trichloroethane		<0.25	<0.025		<0.005
Trichlorofluromethane		<0.042	<0.050		<0.010
Trichlorotrifluoroethane		<0.042	NR		NR
Vinyl Chloride		NR	<0.050		<0.010
m,p-Xylenes		<0.25	NR		NR
o-Xylene		<0.17	NR		NR
Xylenes (Total)		NR	<0.150		<0.005

NR = Analysis not requested on this sample

TABLE D-8
(Continued)

SUBSURFACE MEDIA ANALYSIS RCRA FACILITY ASSESSMENT
NORTH LIME SLUDGE POND

ANALYTE	HAZARDOUS WASTE THRESHOLD	SAMPLE LOCATION, DEPTH (ft), AND NUMBER		
		SP-EF-1-1 0-3 920407-198	SP-EF-2-1 0-3 920407-197	SP-EF-3-1 0-1 920407-199
TCLP Volatile Organics (mg/l):				
Benzene	0.50	<0.09	<0.09	<0.09
2-Butanone	200.00	<0.25	<0.25	<0.25
Carbon Tetrachloride	0.50	<0.15	<0.15	<0.15
Chlorobenzene	100.00	<0.19	<0.19	<0.19
Chloroform	6.00	<0.12	<0.12	<0.12
1,4-Dichlorobenzene	7.50	<0.35	<0.35	<0.35
1,2-Dichloroethane	0.50	<0.10	<0.10	<0.10
1,1-Dichloroethylene	0.70	<0.12	<0.12	<0.12
Tetrachloroethylene	0.70	<0.19	<0.19	<0.19
Trichloroethylene	0.50	<0.22	<0.22	<0.22
Vinyl Chloride	0.20	<0.15	<0.15	<0.15
TCLP Semi Volatiles (mg/l):				
m,p-Cresol	200.00	<0.04	<0.04	<0.04
o-Cresol	200.00	<0.04	<0.04	<0.04
1,4-Dichlorobenzene	7.50	NR	NR	NR
2,4-Dinitrotoluene	0.13	<0.04	<0.04	<0.04
Hexachlorobenzene	0.13	<0.04	<0.04	<0.04
Hexachloroethane	3.00	<0.04	<0.04	<0.04
Nitrobenzene	2.00	<0.04	<0.04	<0.04
Pentachlorophenol	100.00	<0.04	<0.04	<0.04
Pyridine	5.00	<0.08	<0.08	<0.08
2,4,6-Trichlorophenol	0.50	<0.04	<0.04	<0.04
2,4,5-Trichlorophenol	2.00	<0.04	<0.04	<0.04
TCLP Pesticides (mg/l):				
Chlordane	0.030	<0.004	<0.004	<0.004
Endrin	0.020	<0.0004	<0.0004	<0.0004
Heptachlor	0.008	<0.0004	<0.0004	<0.0004
Heptachlor Epoxide	0.008	<0.0004	<0.0004	<0.0004
Lindane	0.400	<0.0004	<0.0004	<0.0004
Methoxychlor	10.000	<0.0004	<0.0004	<0.0004
Toxaphene	0.500	<0.02	<0.02	<0.02
TCLP Herbicides (mg/l):				
2,4-D	10.00	<0.001	<0.001	<0.001
Silvex	1.00	<0.001	<0.001	<0.001

000814

TABLE D-9

TABLE D-9

LIME SLUDGE PONDS
RI/FS SURFACE WATER RESULTS
OPERABLE UNIT 2 REMEDIAL INVESTIGATION
FERNALD ENVIRONMENTAL MANAGEMENT PROJECT

PHASE I - RADIOLOGICAL PARAMETERS

BORING NUMBER		LIME SLUDGE				LIME SLUDGE		
SAMPLE NUMBER		067008				067500		
SAMPLING DATE		05/14/91				08/29/91		
RADIOLOGICAL PARAMETERS	FLTD	RESULTS	UNITS	VQ	FLTD	RESULTS	UNITS	VQ
NP-237	UNKN	1.000	pci/L	UJ	UNKN	1.000	pci/L	U
PU-238	UNKN	1.000	pci/L	U	UNKN	1.000	pci/L	UJ
PU-239/240	UNKN	1.000	pci/L	U	UNKN	1.000	pci/L	U
RA-226	UNKN	1.000	pci/L	UJ	UNKN	1.000	pci/L	U
RA-228	UNKN	3.000	pci/L	UJ	UNKN	3.000	pci/L	U
SR-90	UNKN	5.000	pci/L	U	UNKN	5.000	pci/L	U
TC-99	UNKN	30.000	pci/L	U	UNKN	30.000	pci/L	U
TH-228	UNKN	1.000	pci/L	U	UNKN	1.000	pci/L	U
TH-230	UNKN	1.000	pci/L	U	UNKN	1.000	pci/L	UJ
TH-232	UNKN	1.000	pci/L	U	UNKN	1.000	pci/L	UJ
TH-TOTAL	UNKN	3.500	ug/L	U	UNKN	4.700	ug/L	U
U-234	UNKN	1.000	pci/L	U	UNKN	1.000	pci/L	UJ
U-235/236	UNKN	1.000	pci/L	U	UNKN	1.000	pci/L	UJ
U-238	UNKN	1.220	pci/L	-	UNKN	1.000	pci/L	U
U-TOTAL	UNKN	6.330	ug/L	-	UNKN	1.000	ug/L	U

000815

TABLE D-9
(Continued)

PHASE I - CHEMICAL PARAMETERS

BORING NUMBER		LIME SLUDGE					LIME SLUDGE					LIME SLUDGE				
SAMPLE NUMBER		067008					067500					067900				
SAMPLING DATE		05/14/91					08/29/91					11/06/91				
CHEMICAL PARAMETERS	FLTD	RESULTS	UNITS	L	VQ		FLTD	RESULTS	UNITS	L	VQ	FLTD	RESULTS	UNITS	L	VQ
Inorganics																
Aluminum	UNKN	0.100	mg/L	D	-		UNKN	0.127	mg/L	D	-	UNKN	0.099	mg/L	D	J
Antimony	UNKN	0.030	mg/L	D	UJ		UNKN	0.030	mg/L	D	UJ	UNKN	0.037	mg/L	D	J
Arsenic	UNKN	0.004	mg/L	D	J		UNKN	0.002	mg/L	D	U	UNKN	0.002	mg/L	D	U
Barium	UNKN	0.043	mg/L	D	-		UNKN	0.061	mg/L	D	-	UNKN	0.041	mg/L	D	J
Beryllium	UNKN	0.002	mg/L	D	U		UNKN	0.002	mg/L	D	U	UNKN	0.002	mg/L	D	U
Boron		NA					UNKN	0.359	mg/L	C	-	UNKN	0.211	mg/L	D	J
Cadmium	UNKN	0.009	mg/L	D	-		UNKN	0.004	mg/L	D	-	UNKN	0.007	mg/L	D	J
Calcium	UNKN	43.300	mg/L	D	-		UNKN	71.000	mg/L	D	-	UNKN	47.900	mg/L	D	-
Chromium	UNKN	0.012	mg/L	D	-		UNKN	0.021	mg/L	D	J	UNKN	0.016	mg/L	D	-
Cobalt	UNKN	0.010	mg/L	D	U		UNKN	0.010	mg/L	D	UJ	UNKN	0.010	mg/L	D	UJ
Copper	UNKN	0.010	mg/L	D	U		UNKN	0.010	mg/L	D	U	UNKN	0.010	mg/L	D	U
Cyanide	UNKN	0.002	mg/L	C	NV		UNKN	0.002	mg/L	D	U		NA			
Iron	UNKN	0.023	mg/L	D	-		UNKN	0.015	mg/L	D	U	UNKN	0.033	mg/L	D	J
Lead	UNKN	0.002	mg/L	D	J		UNKN	0.002	mg/L	D	U	UNKN	0.002	mg/L	D	U
Magnesium	UNKN	33.500	mg/L	D	-		UNKN	24.400	mg/L	D	-	UNKN	47.800	mg/L	D	-
Manganese	UNKN	0.008	mg/L	D	-		UNKN	0.006	mg/L	D	-	UNKN	0.006	mg/L	D	-
Mercury	UNKN	0.001	mg/L	C	NV		UNKN	0.000	mg/L	D	U	UNKN	0.000	mg/L	D	UJ
Molybdenum	UNKN	0.011	mg/L	D	-		UNKN	0.010	mg/L	D	U	UNKN	0.014	mg/L	D	J
Nickel	UNKN	0.020	mg/L	D	U		UNKN	0.020	mg/L	D	UJ	UNKN	0.020	mg/L	D	UJ
Potassium	UNKN	8.540	mg/L	D	-		UNKN	11.300	mg/L	D	-	UNKN	13.200	mg/L	D	-
Selenium	UNKN	0.002	mg/L	D	U		UNKN	0.002	mg/L	D	UJ	UNKN	0.002	mg/L	D	U
Silicon	UNKN	0.402	mg/L	D	-		UNKN	0.520	mg/L	C	J	UNKN	0.780	mg/L	D	J
Silver	UNKN	0.010	mg/L	D	UJ		UNKN	0.017	mg/L	D	J	UNKN	0.011	mg/L	D	J
Sodium	UNKN	272.000	mg/L	D	-		UNKN	299.000	mg/L	D	-	UNKN	199.000	mg/L	D	-
Thallium	UNKN	0.002	mg/L	D	UJ		UNKN	0.010	mg/L	D	UJ	UNKN	0.002	mg/L	D	U
Tin		NA					UNKN	0.200	mg/L	C	U	UNKN	0.200	mg/L	D	U
Vanadium	UNKN	0.010	mg/L	D	U		UNKN	0.010	mg/L	D	-	UNKN	0.010	mg/L	D	U
Zinc	UNKN	0.193	mg/L	D	-		UNKN	0.016	mg/L	D	-	UNKN	0.005	mg/L	D	U
Volatile Organics																
1,1,1,2-Tetrachloroethane		NA						NA				UNFI	10.000	ug/L	D	U
1,1,1,2-Tetrachloroethane		NA					UNKN	10.000	ug/L	D	U		NA			
1,1,1-Trichloroethane		NA						NA				UNFI	5.000	ug/L	D	U
1,1,1-Trichloroethane	UNKN	5.000	ug/L	C	NV		UNKN	5.000	ug/L	D	U		NA			
1,1,2,2-Tetrachloroethane		NA						NA				UNFI	5.000	ug/L	D	U
1,1,2,2-Tetrachloroethane	UNKN	5.000	ug/L	C	NV		UNKN	5.000	ug/L	D	U		NA			
1,1,2-Trichloroethane		NA						NA				UNFI	5.000	ug/L	D	U
1,1,2-Trichloroethane	UNKN	5.000	ug/L	C	NV		UNKN	5.000	ug/L	D	U		NA			
1,1-Dichloroethane		NA						NA				UNFI	5.000	ug/L	D	U
1,1-Dichloroethane	UNKN	5.000	ug/L	C	NV		UNKN	5.000	ug/L	D	U		NA			
1,1-Dichloroethene		NA						NA				UNFI	5.000	ug/L	D	U

TABLE D-9
(Continued)

PHASE I - CHEMICAL PARAMETERS

BORING NUMBER	LIME SLUDGE					LIME SLUDGE					LIME SLUDGE				
SAMPLE NUMBER	067008					067500					067900				
SAMPLING DATE	05/14/91					08/29/91					11/06/91				
CHEMICAL PARAMETERS	FLTD	RESULTS	UNITS	L	VQ	FLTD	RESULTS	UNITS	L	VQ	FLTD	RESULTS	UNITS	L	VQ
Volatile Organics															
1,1-Dichloroethene	UNKN	5.000	ug/L	C	NV	UNKN	5.000	ug/L	D	U		NA			
1,2,3-Trichloropropane		NA					NA				UNFI	10.000	ug/L	D	U
1,2,3-Trichloropropane		NA				UNKN	10.000	ug/L	D	U		NA			
1,2-Dibromo-3-chloropropane		NA					NA				UNFI	10.000	ug/L	D	U
1,2-Dibromo-3-chloropropane		NA				UNKN	10.000	ug/L	D	U		NA			
1,2-Dibromoethane		NA					NA				UNFI	10.000	ug/L	D	U
1,2-Dibromoethane		NA				UNKN	10.000	ug/L	D	U		NA			
1,2-Dichloroethane		NA					NA				UNFI	5.000	ug/L	D	U
1,2-Dichloroethane	UNKN	5.000	ug/L	C	NV	UNKN	5.000	ug/L	D	U		NA			
1,2-Dichloroethene		NA					NA				UNFI	5.000	ug/L	D	U
1,2-Dichloroethene	UNKN	5.000	ug/L	C	NV	UNKN	5.000	ug/L	D	U		NA			
1,2-Dichloropropane		NA					NA				UNFI	5.000	ug/L	D	U
1,2-Dichloropropane	UNKN	5.000	ug/L	C	NV	UNKN	5.000	ug/L	D	U		NA			
1,4-Dioxane		NA					NA				UNFI	200.000	ug/L	D	R
1,4-Dioxane		NA				UNKN	200.000	ug/L	D	U		NA			
2-Butanone		NA					NA				UNFI	10.000	ug/L	D	U
2-Butanone	UNKN	10.000	ug/L	C	NV	UNKN	10.000	ug/L	D	UJ		NA			
2-Chloro-1,3-butadiene		NA					NA				UNFI	10.000	ug/L	D	UJ
2-Chloro-1,3-butadiene		NA				UNKN	10.000	ug/L	D	U		NA			
2-Hexanone		NA					NA				UNFI	10.000	ug/L	D	U
2-Hexanone	UNKN	10.000	ug/L	C	NV	UNKN	10.000	ug/L	D	U		NA			
3-Chloropropene		NA					NA				UNFI	10.000	ug/L	D	UJ
3-Chloropropene		NA				UNKN	10.000	ug/L	D	U		NA			
4-Methyl-2-pentanone		NA					NA				UNFI	10.000	ug/L	D	U
4-Methyl-2-pentanone	UNKN	10.000	ug/L	C	NV	UNKN	10.000	ug/L	D	U		NA			
Acetone		NA					NA				UNFI	10.000	ug/L	D	U
Acetone	UNKN	8.000	ug/L	C	NV	UNKN	10.000	ug/L	D	U		NA			
Acetonitrile		NA					NA				UNFI	20.000	ug/L	D	UJ
Acetonitrile		NA				UNKN	20.000	ug/L	D	U		NA			
Acrolein		NA					NA				UNFI	20.000	ug/L	D	UJ
Acrolein		NA				UNKN	20.000	ug/L	D	U		NA			
Acrylonitrile		NA					NA				UNFI	20.000	ug/L	D	R
Acrylonitrile		NA				UNKN	20.000	ug/L	D	U		NA			
Benzene		NA					NA				UNFI	5.000	ug/L	D	UJ
Benzene	UNKN	5.000	ug/L	C	NV	UNKN	5.000	ug/L	D	UJ		NA			
Bromodichloromethane		NA					NA				UNFI	5.000	ug/L	D	U
Bromodichloromethane	UNKN	5.000	ug/L	C	NV	UNKN	5.000	ug/L	D	U		NA			
Bromoform		NA					NA				UNFI	5.000	ug/L	D	U
Bromoform	UNKN	5.000	ug/L	C	NV	UNKN	5.000	ug/L	D	U		NA			
Bromomethane		NA					NA				UNFI	10.000	ug/L	D	U
Bromomethane	UNKN	10.000	ug/L	C	NV	UNKN	10.000	ug/L	D	UJ		NA			
Carbon Tetrachloride		NA					NA				UNFI	5.000	ug/L	D	U

000817

6508

TABLE D-9
(Continued)

PHASE I - CHEMICAL PARAMETERS

BORING NUMBER	LIME SLUDGE					LIME SLUDGE					LIME SLUDGE				
SAMPLE NUMBER	067008					067500					067900				
SAMPLING DATE	05/14/91					08/29/91					11/06/91				
CHEMICAL PARAMETERS	FLTD	RESULTS	UNITS	L	VQ	FLTD	RESULTS	UNITS	L	VQ	FLTD	RESULTS	UNITS	L	VQ
Volatile Organics															
Carbon Tetrachloride	UNKN	5.000	ug/L	C	NV	UNKN	5.000	ug/L	D	U		NA			
Carbon disulfide		NA					NA				UNFI	5.000	ug/L	D	U
Carbon disulfide	UNKN	5.000	ug/L	C	NV	UNKN	5.000	ug/L	D	UJ		NA			
Chlorobenzene		NA					NA				UNFI	5.000	ug/L	D	UJ
Chlorobenzene	UNKN	5.000	ug/L	C	NV	UNKN	5.000	ug/L	D	UJ		NA			
Chloroethane		NA					NA				UNFI	10.000	ug/L	D	U
Chloroethane	UNKN	10.000	ug/L	C	NV	UNKN	10.000	ug/L	D	U		NA			
Chloroform		NA					NA				UNFI	5.000	ug/L	D	U
Chloroform	UNKN	5.000	ug/L	C	NV	UNKN	5.000	ug/L	D	U		NA			
Chloromethane		NA					NA				UNFI	10.000	ug/L	D	UJ
Chloromethane	UNKN	10.000	ug/L	C	NV	UNKN	10.000	ug/L	D	UJ		NA			
Dibromochloromethane		NA					NA				UNFI	5.000	ug/L	D	U
Dibromochloromethane	UNKN	5.000	ug/L	C	NV	UNKN	5.000	ug/L	D	U		NA			
Dibromomethane		NA					NA				UNFI	10.000	ug/L	D	U
Dibromomethane		NA				UNKN	10.000	ug/L	D	U		NA			
Dichlorodifluoromethane		NA					NA				UNFI	200.000	ug/L	D	R
Dichlorodifluoromethane		NA				UNKN	200.000	ug/L	D	U		NA			
Ethyl cyanide		NA					NA				UNFI	10.000	ug/L	D	U
Ethyl cyanide		NA				UNKN	10.000	ug/L	D	U		NA			
Ethyl methacrylate		NA					NA				UNFI	10.000	ug/L	D	U
Ethyl methacrylate		NA				UNKN	10.000	ug/L	D	U		NA			
Ethylbenzene		NA					NA				UNFI	5.000	ug/L	D	UJ
Ethylbenzene	UNKN	5.000	ug/L	C	NV	UNKN	5.000	ug/L	D	UJ		NA			
Iodomethane		NA					NA				UNFI	10.000	ug/L	D	U
Iodomethane		NA				UNKN	10.000	ug/L	D	U		NA			
Isobutyl alcohol		NA					NA				UNFI	200.000	ug/L	D	U
Isobutyl alcohol		NA				UNKN	200.000	ug/L	D	U		NA			
Methacrylonitrile		NA					NA				UNFI	10.000	ug/L	D	U
Methacrylonitrile		NA				UNKN	10.000	ug/L	D	U		NA			
Methyl methacrylate		NA					NA				UNFI	10.000	ug/L	D	U
Methyl methacrylate		NA				UNKN	10.000	ug/L	D	U		NA			
Methylene chloride		NA					NA				UNFI	5.000	ug/L	D	U
Methylene chloride	UNKN	7.000	ug/L	C	NV	UNKN	5.000	ug/L	D	U		NA			
Pyridine		NA					NA				UNFI	10.000	ug/L	D	U
Pyridine		NA				UNKN	200.000	ug/L	D	U		NA			
Styrene		NA					NA				UNFI	5.000	ug/L	D	UJ
Styrene	UNKN	5.000	ug/L	C	NV	UNKN	5.000	ug/L	D	UJ		NA			
Tetrachloroethene		NA					NA				UNFI	5.000	ug/L	D	U
Tetrachloroethene	UNKN	5.000	ug/L	C	NV	UNKN	5.000	ug/L	D	U		NA			
Toluene		NA					NA				UNFI	5.000	ug/L	D	UJ
Toluene	UNKN	5.000	ug/L	C	NV	UNKN	5.000	ug/L	D	UJ		NA			
Trichloroethene		NA					NA				UNFI	5.000	ug/L	D	U

000218

TABLE D-9
(Continued)

PHASE I - CHEMICAL PARAMETERS

BORING NUMBER	LIME SLUDGE					LIME SLUDGE					LIME SLUDGE				
SAMPLE NUMBER	067008					067500					067900				
SAMPLING DATE	05/14/91					08/29/91					11/06/91				
CHEMICAL PARAMETERS	FLTD	RESULTS	UNITS	L	VQ	FLTD	RESULTS	UNITS	L	VQ	FLTD	RESULTS	UNITS	L	VQ
Volatile Organics															
Trichloroethene	UNKN	5.000	ug/L	C	NV	UNKN	5.000	ug/L	D	U		NA			
Trichlorofluoromethane		NA				UNKN	10.000	ug/L	D	U	UNKN	10.000	ug/L	D	U
Vinyl Acetate		NA					NA				UNFI	10.000	ug/L	D	U
Vinyl Acetate	UNKN	10.000	ug/L	C	NV	UNKN	10.000	ug/L	D	U		NA			
Vinyl chloride		NA					NA				UNFI	10.000	ug/L	D	U
Vinyl chloride	UNKN	10.000	ug/L	C	NV	UNKN	10.000	ug/L	D	U		NA			
Xylenes, Total		NA					NA				UNFI	5.000	ug/L	D	UJ
Xylenes, Total	UNKN	5.000	ug/L	C	NV	UNKN	5.000	ug/L	D	UJ		NA			
cis-1,3-Dichloropropene		NA					NA				UNFI	5.000	ug/L	D	U
cis-1,3-Dichloropropene	UNKN	5.000	ug/L	C	NV	UNKN	5.000	ug/L	D	U		NA			
trans-1,3-Dichloropropene		NA					NA				UNFI	5.000	ug/L	D	U
trans-1,3-Dichloropropene	UNKN	5.000	ug/L	C	NV	UNKN	5.000	ug/L	D	U		NA			
trans-1,4-Dichloro-2-butene		NA					NA				UNFI	10.000	ug/L	D	UJ
trans-1,4-Dichloro-2-butene		NA				UNKN	10.000	ug/L	D	U		NA			
Semivolatile Organics															
1,2,4,5-Tetrachlorobenzene		NA					NA				UNFI	10.000	ug/L	D	UJ
1,2,4,5-Tetrachlorobenzene		NA				UNKN	10.000	ug/L	D	UJ		NA			
1,2,4-Trichlorobenzene		NA					NA				UNFI	10.000	ug/L	D	U
1,2,4-Trichlorobenzene	UNKN	10.000	ug/L	C	NV	UNKN	10.000	ug/L	D	U		NA			
1,2-Dichlorobenzene		NA					NA				UNFI	10.000	ug/L	D	U
1,2-Dichlorobenzene	UNKN	10.000	ug/L	C	NV	UNKN	10.000	ug/L	D	U		NA			
1,3,5-Trinitrobenzene		NA					NA				UNFI	10.000	ug/L	D	U
1,3,5-Trinitrobenzene		NA				UNKN	10.000	ug/L	D	U		NA			
1,3-Dichlorobenzene		NA					NA				UNFI	10.000	ug/L	D	U
1,3-Dichlorobenzene	UNKN	10.000	ug/L	C	NV	UNKN	10.000	ug/L	D	U		NA			
1,3-Dinitrobenzene		NA					NA				UNFI	10.000	ug/L	D	U
1,3-Dinitrobenzene		NA				UNKN	10.000	ug/L	D	U		NA			
1,4-Dichlorobenzene		NA					NA				UNFI	10.000	ug/L	D	U
1,4-Dichlorobenzene	UNKN	10.000	ug/L	C	NV	UNKN	10.000	ug/L	D	U		NA			
1,4-Naphthoquinone		NA					NA				UNFI	10.000	ug/L	D	UJ
1,4-Naphthoquinone		NA				UNKN	10.000	ug/L	D	UJ		NA			
1-Naphthylamine		NA					NA				UNFI	120.000	ug/L	D	U
1-Naphthylamine		NA				UNKN	120.000	ug/L	D	U		NA			
2,3,4,6-Tetrachlorophenol		NA					NA				UNFI	10.000	ug/L	D	U
2,3,4,6-Tetrachlorophenol		NA				UNKN	10.000	ug/L	D	U		NA			
2,4,5-Trichlorophenol		NA					NA				UNFI	50.000	ug/L	D	U
2,4,5-Trichlorophenol	UNKN	50.000	ug/L	C	NV	UNKN	50.000	ug/L	D	U		NA			
2,4,6-Trichlorophenol		NA					NA				UNFI	10.000	ug/L	D	U
2,4,6-Trichlorophenol	UNKN	10.000	ug/L	C	NV	UNKN	10.000	ug/L	D	U		NA			
2,4-Dichlorophenol		NA					NA				UNFI	10.000	ug/L	D	U

000839

6508

TABLE D-9
(Continued)

PHASE I - CHEMICAL PARAMETERS

BORING NUMBER	LIME SLUDGE					LIME SLUDGE					LIME SLUDGE				
SAMPLE NUMBER	067008					067500					067900				
SAMPLING DATE	05/14/91					08/29/91					11/06/91				
CHEMICAL PARAMETERS	FLTD	RESULTS	UNITS	L	VQ	FLTD	RESULTS	UNITS	L	VQ	FLTD	RESULTS	UNITS	L	VQ
Semivolatile Organics															
2,4-Dichlorophenol	UNKN	10.000	ug/L	C	NV	UNKN	10.000	ug/L	D	U		NA			
2,4-Dimethylphenol		NA					NA				UNFI	10.000	ug/L	D	U
2,4-Dimethylphenol	UNKN	10.000	ug/L	C	NV	UNKN	10.000	ug/L	D	U		NA			
2,4-Dinitrophenol		NA					NA				UNFI	50.000	ug/L	D	UJ
2,4-Dinitrophenol	UNKN	50.000	ug/L	C	NV	UNKN	50.000	ug/L	D	UJ		NA			
2,4-Dinitrotoluene		NA					NA				UNFI	10.000	ug/L	D	U
2,4-Dinitrotoluene	UNKN	10.000	ug/L	C	NV	UNKN	10.000	ug/L	D	U		NA			
2,6-Dichlorophenol		NA					NA				UNFI	10.000	ug/L	D	U
2,6-Dichlorophenol		NA				UNKN	10.000	ug/L	D	UJ		NA			
2,6-Dinitrotoluene		NA					NA				UNFI	10.000	ug/L	D	U
2,6-Dinitrotoluene	UNKN	10.000	ug/L	C	NV	UNKN	10.000	ug/L	D	U		NA			
2-Acetylaminofluorene		NA					NA				UNFI	10.000	ug/L	D	U
2-Acetylaminofluorene		NA				UNKN	10.000	ug/L	D	U		NA			
2-Chloronaphthalene		NA					NA				UNFI	10.000	ug/L	D	U
2-Chloronaphthalene	UNKN	10.000	ug/L	C	NV	UNKN	10.000	ug/L	D	U		NA			
2-Chlorophenol		NA					NA				UNFI	10.000	ug/L	D	U
2-Chlorophenol	UNKN	10.000	ug/L	C	NV	UNKN	10.000	ug/L	D	U		NA			
2-Methylnaphthalene		NA					NA				UNFI	10.000	ug/L	D	U
2-Methylnaphthalene	UNKN	10.000	ug/L	C	NV	UNKN	10.000	ug/L	D	U		NA			
2-Methylphenol		NA					NA				UNFI	10.000	ug/L	D	U
2-Methylphenol	UNKN	10.000	ug/L	C	NV	UNKN	10.000	ug/L	D	U		NA			
2-Naphthylamine		NA					NA				UNFI	170.000	ug/L	D	U
2-Naphthylamine		NA				UNKN	170.000	ug/L	D	UJ		NA			
2-Nitroaniline		NA					NA				UNFI	50.000	ug/L	D	U
2-Nitroaniline	UNKN	50.000	ug/L	C	NV	UNKN	50.000	ug/L	D	U		NA			
2-Nitrophenol		NA					NA				UNFI	10.000	ug/L	D	U
2-Nitrophenol	UNKN	10.000	ug/L	C	NV	UNKN	10.000	ug/L	D	U		NA			
2-Picoline		NA					NA				UNFI	70.000	ug/L	D	U
2-Picoline		NA				UNKN	70.000	ug/L	D	UJ		NA			
3,3'-Dichlorobenzidine		NA					NA				UNFI	20.000	ug/L	D	U
3,3'-Dichlorobenzidine	UNKN	20.000	ug/L	C	NV	UNKN	20.000	ug/L	D	U		NA			
3,3'-Dimethylbenzidine		NA					NA				UNFI	80.000	ug/L	D	U
3,3'-Dimethylbenzidine		NA				UNKN	80.000	ug/L	D	U		NA			
3-Methylcholanthrene		NA					NA				UNFI	30.000	ug/L	D	UJ
3-Methylcholanthrene		NA				UNKN	30.000	ug/L	D	U		NA			
3-Methylphenol		NA					NA				UNFI	10.000	ug/L	D	U
3-Methylphenol		NA				UNKN	10.000	ug/L	D	U		NA			
3-Nitroaniline		NA					NA				UNFI	50.000	ug/L	D	U
3-Nitroaniline	UNKN	50.000	ug/L	C	NV	UNKN	50.000	ug/L	D	U		NA			
4,6-Dinitro-2-methylphenol		NA					NA				UNFI	50.000	ug/L	D	U
4,6-Dinitro-2-methylphenol	UNKN	50.000	ug/L	C	NV	UNKN	50.000	ug/L	D	U		NA			
4-Aminobiphenyl		NA					NA				UNFI	50.000	ug/L	D	U

TABLE D-9
(Continued)

PHASE I - CHEMICAL PARAMETERS

BORING NUMBER	LIME SLUDGE					LIME SLUDGE					LIME SLUDGE				
SAMPLE NUMBER	067008					067500					067900				
SAMPLING DATE	05/14/91					08/29/91					11/06/91				
CHEMICAL PARAMETERS	FLTD	RESULTS	UNITS	L	VQ	FLTD	RESULTS	UNITS	L	VQ	FLTD	RESULTS	UNITS	L	VQ
Semivolatile Organics															
4-Aminobiphenyl		NA				UNKN	50.000	ug/L	D	U		NA			
4-Bromophenyl phenyl ether		NA					NA				UNFI	10.000	ug/L	D	U
4-Bromophenyl phenyl ether	UNKN	10.000	ug/L	C	NV	UNKN	10.000	ug/L	D	U		NA			
4-Chloro-3-methylphenol		NA					NA				UNFI	10.000	ug/L	D	U
4-Chloro-3-methylphenol	UNKN	10.000	ug/L	C	NV	UNKN	10.000	ug/L	D	U		NA			
4-Chlorophenylphenyl ether		NA					NA				UNFI	10.000	ug/L	D	U
4-Chlorophenylphenyl ether	UNKN	10.000	ug/L	C	NV	UNKN	10.000	ug/L	D	U		NA			
4-Methylphenol		NA					NA				UNFI	10.000	ug/L	D	U
4-Methylphenol	UNKN	10.000	ug/L	C	NV	UNKN	10.000	ug/L	D	U		NA			
4-Nitroaniline		NA					NA				UNFI	50.000	ug/L	D	U
4-Nitroaniline	UNKN	50.000	ug/L	C	NV	UNKN	50.000	ug/L	D	U		NA			
4-Nitrophenol		NA					NA				UNFI	50.000	ug/L	D	U
4-Nitrophenol	UNKN	50.000	ug/L	C	NV	UNKN	50.000	ug/L	D	U		NA			
4-Nitroquinoline-1-oxide		NA					NA				UNFI	10.000	ug/L	D	UJ
4-Nitroquinoline-1-oxide		NA				UNKN	10.000	ug/L	D	UJ		NA			
5-Nitro-o-toluidine		NA					NA				UNFI	20.000	ug/L	D	U
5-Nitro-o-toluidine		NA				UNKN	20.000	ug/L	D	U		NA			
7,12-Dimethylbenz(a)anthracene		NA					NA				UNFI	20.000	ug/L	D	U
7,12-Dimethylbenz(a)anthracene		NA				UNKN	20.000	ug/L	D	U		NA			
Acenaphthene		NA					NA				UNFI	10.000	ug/L	D	U
Acenaphthene	UNKN	10.000	ug/L	C	NV	UNKN	10.000	ug/L	D	U		NA			
Acenaphthylene		NA					NA				UNFI	10.000	ug/L	D	U
Acenaphthylene	UNKN	10.000	ug/L	C	NV	UNKN	10.000	ug/L	D	U		NA			
Acetophenone		NA					NA				UNFI	10.000	ug/L	D	U
Acetophenone		NA				UNKN	10.000	ug/L	D	UJ		NA			
Aniline		NA					NA				UNFI	50.000	ug/L	D	U
Aniline		NA				UNKN	50.000	ug/L	D	U		NA			
Anthracene		NA					NA				UNFI	10.000	ug/L	D	U
Anthracene	UNKN	10.000	ug/L	C	NV	UNKN	10.000	ug/L	D	U		NA			
Aramite		NA					NA				UNFI	10.000	ug/L	D	UJ
Aramite		NA				UNKN	10.000	ug/L	D	U		NA			
Benzo(a)anthracene		NA					NA				UNFI	10.000	ug/L	D	U
Benzo(a)anthracene	UNKN	10.000	ug/L	C	NV	UNKN	10.000	ug/L	D	U		NA			
Benzo(a)pyrene		NA					NA				UNFI	10.000	ug/L	D	U
Benzo(a)pyrene	UNKN	10.000	ug/L	C	NV	UNKN	10.000	ug/L	D	U		NA			
Benzo(b)fluoranthene		NA					NA				UNFI	10.000	ug/L	D	U
Benzo(b)fluoranthene	UNKN	10.000	ug/L	C	NV	UNKN	10.000	ug/L	D	U		NA			
Benzo(g,h,i)perylene		NA					NA				UNFI	10.000	ug/L	D	U
Benzo(g,h,i)perylene	UNKN	10.000	ug/L	C	NV	UNKN	10.000	ug/L	D	U		NA			
Benzo(k)fluoranthene		NA					NA				UNFI	10.000	ug/L	D	U
Benzo(k)fluoranthene	UNKN	10.000	ug/L	C	NV	UNKN	10.000	ug/L	D	U		NA			
Benzoic acid		NA					NA				UNFI	50.000	ug/L	D	U

TABLE D-9
(Continued)

PHASE I - CHEMICAL PARAMETERS

BORING NUMBER	LIME SLUDGE					LIME SLUDGE					LIME SLUDGE				
SAMPLE NUMBER	067008					067500					067900				
SAMPLING DATE	05/14/91					08/29/91					11/06/91				
CHEMICAL PARAMETERS	FLTD	RESULTS	UNITS	L	VQ	FLTD	RESULTS	UNITS	L	VQ	FLTD	RESULTS	UNITS	L	VQ
Semivolatile Organics															
Benzoic acid	UNKN	50.000	ug/L	C	NV	UNKN	50.000	ug/L	D	U		NA			
Benzyl alcohol		NA					NA				UNFI	10.000	ug/L	D	U
Benzyl alcohol	UNKN	10.000	ug/L	C	NV	UNKN	10.000	ug/L	D	U		NA			
Butyl benzyl phthalate		NA					NA				UNFI	10.000	ug/L	D	U
Butyl benzyl phthalate	UNKN	10.000	ug/L	C	NV	UNKN	10.000	ug/L	D	U		NA			
Chrysene		NA					NA				UNFI	10.000	ug/L	D	U
Chrysene	UNKN	10.000	ug/L	C	NV	UNKN	10.000	ug/L	D	U		NA			
Di-n-butyl phthalate		NA					NA				UNFI	10.000	ug/L	D	U
Di-n-butyl phthalate	UNKN	10.000	ug/L	C	NV	UNKN	10.000	ug/L	D	U		NA			
Di-n-octyl phthalate		NA					NA				UNFI	10.000	ug/L	D	U
Di-n-octyl phthalate	UNKN	10.000	ug/L	C	NV	UNKN	10.000	ug/L	D	U		NA			
Diallate		NA					NA				UNFI	10.000	ug/L	D	UJ
Diallate		NA				UNKN	10.000	ug/L	D	UJ		NA			
Dibenzo(a,h)anthracene		NA					NA				UNFI	10.000	ug/L	D	U
Dibenzo(a,h)anthracene	UNKN	10.000	ug/L	C	NV	UNKN	10.000	ug/L	D	U		NA			
Dibenzofuran		NA					NA				UNFI	10.000	ug/L	D	U
Dibenzofuran	UNKN	10.000	ug/L	C	NV	UNKN	10.000	ug/L	D	U		NA			
Diethyl phthalate		NA					NA				UNFI	10.000	ug/L	D	U
Diethyl phthalate	UNKN	10.000	ug/L	C	NV	UNKN	10.000	ug/L	D	U		NA			
Dimethyl phthalate		NA					NA				UNFI	10.000	ug/L	D	U
Dimethyl phthalate	UNKN	10.000	ug/L	C	NV	UNKN	10.000	ug/L	D	U		NA			
Diphenylamine		NA					NA				UNFI	10.000	ug/L	D	UJ
Diphenylamine		NA				UNKN	10.000	ug/L	D	UJ		NA			
Ethyl methanesulfonate		NA					NA				UNFI	10.000	ug/L	D	U
Ethyl methanesulfonate		NA				UNKN	10.000	ug/L	D	UJ		NA			
Fluoranthene		NA					NA				UNFI	10.000	ug/L	D	U
Fluoranthene	UNKN	10.000	ug/L	C	NV	UNKN	10.000	ug/L	D	U		NA			
Fluorene		NA					NA				UNFI	10.000	ug/L	D	U
Fluorene	UNKN	10.000	ug/L	C	NV	UNKN	10.000	ug/L	D	U		NA			
Hexachlorobenzene		NA					NA				UNFI	10.000	ug/L	D	U
Hexachlorobenzene	UNKN	10.000	ug/L	C	NV	UNKN	10.000	ug/L	D	U		NA			
Hexachlorobutadiene		NA					NA				UNFI	10.000	ug/L	D	U
Hexachlorobutadiene	UNKN	10.000	ug/L	C	NV	UNKN	10.000	ug/L	D	U		NA			
Hexachlorocyclopentadiene		NA					NA				UNFI	10.000	ug/L	D	U
Hexachlorocyclopentadiene	UNKN	10.000	ug/L	C	NV	UNKN	10.000	ug/L	D	UJ		NA			
Hexachloroethane		NA					NA				UNFI	10.000	ug/L	D	U
Hexachloroethane	UNKN	10.000	ug/L	C	NV	UNKN	10.000	ug/L	D	U		NA			
Hexachlorophene		NA					NA				UNFI	50.000	ug/L	D	U
Hexachlorophene		NA				UNKN	50.000	ug/L	D	UJ		NA			
Hexachloropropene		NA					NA				UNFI	20.000	ug/L	D	R
Hexachloropropene		NA				UNKN	20.000	ug/L	D	UJ		NA			
Indeno(1,2,3-cd)pyrene		NA					NA				UNFI	10.000	ug/L	D	U

000322

TABLE D-9
(Continued)

PHASE I - CHEMICAL PARAMETERS

BORING NUMBER	LIME SLUDGE					LIME SLUDGE					LIME SLUDGE				
SAMPLE NUMBER	067008					067500					067900				
SAMPLING DATE	05/14/91					08/29/91					11/06/91				
CHEMICAL PARAMETERS	FLTD	RESULTS	UNITS	L	VQ	FLTD	RESULTS	UNITS	L	VQ	FLTD	RESULTS	UNITS	L	VQ
Semivolatile Organics															
Indeno(1,2,3-cd)pyrene	UNKN	10.000	ug/L	C	NV	UNKN	10.000	ug/L	D	U		NA			
Isophorone		NA					NA				UNFI	10.000	ug/L	D	U
Isophorone	UNKN	10.000	ug/L	C	NV	UNKN	10.000	ug/L	D	U		NA			
Isosafrole		NA					NA				UNFI	10.000	ug/L	D	U
Isosafrole		NA				UNKN	10.000	ug/L	D	UJ		NA			
Methapyrilene		NA					NA				UNFI	40.000	ug/L	D	UJ
Methapyrilene		NA				UNKN	40.000	ug/L	D	R		NA			
Methyl methanesulfonate		NA					NA				UNFI	10.000	ug/L	D	U
Methyl methanesulfonate		NA				UNKN	10.000	ug/L	D	UJ		NA			
Methyl parathion		NA					NA				UNFI	3.000	ug/L	D	UJ
Methyl parathion		NA				UNKN	3.000	ug/L	D	U		NA			
N-Nitroso-di-n-propylamine		NA					NA				UNFI	10.000	ug/L	D	U
N-Nitroso-di-n-propylamine	UNKN	10.000	ug/L	C	NV	UNKN	10.000	ug/L	D	U		NA			
N-Nitrosodi-n-butylamine		NA					NA				UNFI	20.000	ug/L	D	UJ
N-Nitrosodi-n-butylamine		NA				UNKN	20.000	ug/L	D	U		NA			
N-Nitrosodiethylamine		NA					NA				UNFI	10.000	ug/L	D	UJ
N-Nitrosodiethylamine		NA				UNKN	10.000	ug/L	D	UJ		NA			
N-Nitrosodimethylamine		NA					NA				UNFI	10.000	ug/L	D	U
N-Nitrosodimethylamine		NA				UNKN	10.000	ug/L	D	U		NA			
N-Nitrosodiphenylamine		NA					NA				UNFI	10.000	ug/L	D	U
N-Nitrosodiphenylamine	UNKN	10.000	ug/L	C	NV	UNKN	10.000	ug/L	D	U		NA			
N-Nitrosomethylethylamine		NA					NA				UNFI	10.000	ug/L	D	UJ
N-Nitrosomethylethylamine		NA				UNKN	10.000	ug/L	D	UJ		NA			
N-Nitrosomorpholine		NA					NA				UNFI	10.000	ug/L	D	U
N-Nitrosomorpholine		NA				UNKN	10.000	ug/L	D	U		NA			
N-Nitrosopiperidine		NA					NA				UNFI	10.000	ug/L	D	U
N-Nitrosopiperidine		NA				UNKN	10.000	ug/L	D	UJ		NA			
N-Nitrosopyrrolidine		NA					NA				UNFI	10.000	ug/L	D	UJ
N-Nitrosopyrrolidine		NA				UNKN	10.000	ug/L	D	U		NA			
Naphthalene		NA					NA				UNFI	10.000	ug/L	D	U
Naphthalene	UNKN	10.000	ug/L	C	NV	UNKN	10.000	ug/L	D	U		NA			
Nitrobenzene		NA					NA				UNFI	10.000	ug/L	D	U
Nitrobenzene	UNKN	10.000	ug/L	C	NV	UNKN	10.000	ug/L	D	U		NA			
O,O,O-Triethylphosphorothioate		NA					NA				UNFI	3.000	ug/L	D	UJ
O,O,O-Triethylphosphorothioate		NA				UNKN	3.000	ug/L	D	U		NA			
Parathion		NA					NA				UNFI	3.000	ug/L	D	UJ
Parathion		NA				UNKN	3.000	ug/L	D	U		NA			
Pentachlorobenzene		NA					NA				UNFI	20.000	ug/L	D	UJ
Pentachlorobenzene		NA				UNKN	20.000	ug/L	D	U		NA			
Pentachloroethane		NA					NA				UNFI	20.000	ug/L	D	U
Pentachloroethane		NA				UNKN	20.000	ug/L	D	UJ		NA			
Pentachloronitrobenzene		NA					NA				UNFI	20.000	ug/L	D	UJ

000823

6508

TABLE D-9
(Continued)

PHASE I - CHEMICAL PARAMETERS

BORING NUMBER	LIME SLUDGE					LIME SLUDGE					LIME SLUDGE				
SAMPLE NUMBER	067008					067500					067900				
SAMPLING DATE	05/14/91					08/29/91					11/06/91				
CHEMICAL PARAMETERS	FLTD	RESULTS	UNITS	L	VQ	FLTD	RESULTS	UNITS	L	VQ	FLTD	RESULTS	UNITS	L	VQ
Semivolatile Organics															
Pentachloronitrobenzene		NA				UNKN	20.000	ug/L	D	U		NA			
Pentachlorophenol		NA					NA				UNFI	50.000	ug/L	D	U
Pentachlorophenol	UNKN	50.000	ug/L	C	NV	UNKN	50.000	ug/L	D	U		NA			
Phenacetin		NA					NA				UNFI	10.000	ug/L	D	U
Phenacetin		NA				UNKN	10.000	ug/L	D	U		NA			
Phenanthrene		NA					NA				UNFI	10.000	ug/L	D	U
Phenanthrene	UNKN	10.000	ug/L	C	NV	UNKN	10.000	ug/L	D	U		NA			
Phenol		NA					NA				UNFI	10.000	ug/L	D	U
Phenol	UNKN	10.000	ug/L	C	NV	UNKN	10.000	ug/L	D	U		NA			
Pronamide		NA					NA				UNFI	30.000	ug/L	D	U
Pronamide		NA				UNKN	30.000	ug/L	D	U		NA			
Pyrene		NA					NA				UNFI	10.000	ug/L	D	U
Pyrene	UNKN	10.000	ug/L	C	NV	UNKN	10.000	ug/L	D	U		NA			
Safrole		NA					NA				UNFI	10.000	ug/L	D	U
Safrole		NA				UNKN	10.000	ug/L	D	UJ		NA			
Sulfotep		NA					NA				UNFI	3.000	ug/L	D	UJ
Sulfotep		NA				UNKN	10.000	ug/L	D	UJ		NA			
Tributyl phosphate		NA					NA				UNFI	10.000	ug/L	D	U
a,a-Dimethylphenethylamine		NA					NA				UNFI	10.000	ug/L	D	U
a,a-Dimethylphenethylamine		NA				UNKN	10.000	ug/L	D	U		NA			
bis(2-Chloroethoxy)methane		NA					NA				UNFI	10.000	ug/L	D	U
bis(2-Chloroethoxy)methane	UNKN	10.000	ug/L	C	NV	UNKN	10.000	ug/L	D	U		NA			
bis(2-Chloroethyl)ether		NA					NA				UNFI	10.000	ug/L	D	U
bis(2-Chloroethyl)ether	UNKN	10.000	ug/L	C	NV	UNKN	10.000	ug/L	D	U		NA			
bis(2-Chloroisopropyl) ether		NA					NA				UNFI	10.000	ug/L	D	U
bis(2-Chloroisopropyl) ether	UNKN	10.000	ug/L	C	NV	UNKN	10.000	ug/L	D	U		NA			
bis(2-Ethylhexyl) phthalate		NA					NA				UNFI	10.000	ug/L	D	U
bis(2-Ethylhexyl) phthalate	UNKN	10.000	ug/L	C	NV	UNKN	10.000	ug/L	D	U		NA			
o-Toluidine		NA					NA				UNFI	10.000	ug/L	D	U
o-Toluidine		NA				UNKN	10.000	ug/L	D	UJ		NA			
p-Chloroaniline		NA					NA				UNFI	10.000	ug/L	D	U
p-Chloroaniline	UNKN	10.000	ug/L	C	NV	UNKN	10.000	ug/L	D	U		NA			
p-Dimethylaminoazobenzene		NA					NA				UNFI	30.000	ug/L	D	UJ
p-Dimethylaminoazobenzene		NA				UNKN	30.000	ug/L	D	U		NA			
p-Phenylenediamine		NA					NA				UNFI	50.000	ug/L	D	U
p-Phenylenediamine		NA				UNKN	50.000	ug/L	D	UJ		NA			
Herbicide Organics															
2,4,5-T		NA					NA				UNFI	2.000	ug/L	D	U
2,4,5-T		NA				UNKN	2.000	ug/L	D	U		NA			
2,4,5-TP (Silvex)		NA					NA				UNFI	1.800	ug/L	D	U

000824

TABLE D-9
(Continued)

PHASE I - CHEMICAL PARAMETERS

BORING NUMBER	LIME SLUDGE					LIME SLUDGE					LIME SLUDGE				
SAMPLE NUMBER	067008					067500					067900				
SAMPLING DATE	05/14/91					08/29/91					11/06/91				
CHEMICAL PARAMETERS	FLTD	RESULTS	UNITS	L	VQ	FLTD	RESULTS	UNITS	L	VQ	FLTD	RESULTS	UNITS	L	VQ
Herbicide Organics															
2,4,5-TP (Silvex)		NA				UNKN	1.800	ug/L	D	U		NA			
2,4-D		NA					NA				UNFI	10.000	ug/L	D	U
2,4-D		NA				UNKN	10.000	ug/L	D	U		NA			
Dinoseb		NA					NA				UNFI	0.710	ug/L	D	U
Dinoseb		NA				UNKN	0.710	ug/L	D	U		NA			
Pesticide Organics/PCBs															
4,4'-DDD		NA					NA				UNFI	0.100	ug/L	D	U
4,4'-DDD	UNKN	0.100	ug/L	C	NV	UNKN	0.100	ug/L	D	U		NA			
4,4'-DDE		NA					NA				UNFI	0.100	ug/L	D	U
4,4'-DDE	UNKN	0.100	ug/L	C	NV	UNKN	0.100	ug/L	D	U		NA			
4,4'-DDT		NA					NA				UNFI	0.100	ug/L	D	U
4,4'-DDT	UNKN	0.100	ug/L	C	NV	UNKN	0.100	ug/L	D	U		NA			
Aldrin		NA					NA				UNFI	0.050	ug/L	D	U
Aldrin	UNKN	0.050	ug/L	C	NV	UNKN	0.050	ug/L	D	U		NA			
Aroclor-1016		NA					NA				UNFI	0.500	ug/L	D	U
Aroclor-1016	UNKN	0.500	ug/L	C	NV	UNKN	0.500	ug/L	D	U		NA			
Aroclor-1221		NA					NA				UNFI	0.500	ug/L	D	U
Aroclor-1221	UNKN	0.500	ug/L	C	NV	UNKN	0.500	ug/L	D	U		NA			
Aroclor-1232		NA					NA				UNFI	0.500	ug/L	D	U
Aroclor-1232	UNKN	0.500	ug/L	C	NV	UNKN	0.500	ug/L	D	U		NA			
Aroclor-1242		NA					NA				UNFI	0.500	ug/L	D	U
Aroclor-1242	UNKN	0.500	ug/L	C	NV	UNKN	0.500	ug/L	D	U		NA			
Aroclor-1248		NA					NA				UNFI	0.500	ug/L	D	U
Aroclor-1248	UNKN	0.500	ug/L	C	NV	UNKN	0.500	ug/L	D	U		NA			
Aroclor-1254		NA					NA				UNFI	1.000	ug/L	D	U
Aroclor-1254	UNKN	1.000	ug/L	C	NV	UNKN	1.000	ug/L	D	U		NA			
Aroclor-1260		NA					NA				UNFI	1.000	ug/L	D	U
Aroclor-1260	UNKN	1.000	ug/L	C	NV	UNKN	1.000	ug/L	D	U		NA			
Chlorobenzilate		NA					NA				UNFI	0.100	ug/L	D	U
Chlorobenzilate		NA				UNKN	0.100	ug/L	D	U		NA			
Dieldrin		NA					NA				UNFI	0.100	ug/L	D	U
Dieldrin	UNKN	0.100	ug/L	C	NV	UNKN	0.100	ug/L	D	U		NA			
Dimethoate		NA					NA				UNFI	3.000	ug/L	D	UJ
Dimethoate		NA				UNKN	3.000	ug/L	D	U		NA			
Disulfoton		NA					NA				UNFI	3.000	ug/L	D	UJ
Disulfoton		NA				UNKN	3.000	ug/L	D	U		NA			
Endosulfan II		NA					NA				UNFI	0.100	ug/L	D	U
Endosulfan II	UNKN	0.100	ug/L	C	NV	UNKN	0.100	ug/L	D	U		NA			
Endosulfan sulfate	UNKN	0.100	ug/L	C	NV	UNKN	0.100	ug/L	D	U	UNKN	0.100	ug/L	D	U
Endosulfan-I		NA					NA				UNFI	0.050	ug/L	D	U

000825

6508

TABLE D-9
(Continued)

PHASE I - CHEMICAL PARAMETERS

BORING NUMBER	LIME SLUDGE					LIME SLUDGE					LIME SLUDGE				
SAMPLE NUMBER	067008					067500					067900				
SAMPLING DATE	05/14/91					08/29/91					11/06/91				
CHEMICAL PARAMETERS	FLTD	RESULTS	UNITS	L	VQ	FLTD	RESULTS	UNITS	L	VQ	FLTD	RESULTS	UNITS	L	VQ
Pesticide Organics/PCBs															
Endosulfan-I	UNKN	0.050	ug/L	C	NV	UNKN	0.050	ug/L	D	U		NA			
Endrin		NA					NA				UNFI	0.100	ug/L	D	U
Endrin	UNKN	0.100	ug/L	C	NV	UNKN	0.100	ug/L	D	U		NA			
Endrin ketone		NA					NA				UNFI	0.100	ug/L	D	U
Endrin ketone	UNKN	0.100	ug/L	C	NV	UNKN	0.100	ug/L	D	U		NA			
Ethion		NA				UNKN	3.000	ug/L	D	U		NA			
Famphur		NA					NA				UNFI	3.000	ug/L	D	UJ
Famphur		NA				UNKN	3.000	ug/L	D	U		NA			
Heptachlor		NA					NA				UNFI	0.050	ug/L	D	U
Heptachlor	UNKN	0.050	ug/L	C	NV	UNKN	0.050	ug/L	D	U		NA			
Heptachlor epoxide		NA					NA				UNFI	0.050	ug/L	D	U
Heptachlor epoxide	UNKN	0.050	ug/L	C	NV	UNKN	0.050	ug/L	D	U		NA			
Isodrin		NA					NA				UNFI	0.050	ug/L	D	U
Isodrin		NA				UNKN	0.050	ug/L	D	U		NA			
Kepone		NA					NA				UNFI	0.100	ug/L	D	U
Kepone		NA				UNKN	0.100	ug/L	D	U		NA			
Methoxychlor		NA					NA				UNFI	0.500	ug/L	D	U
Methoxychlor	UNKN	0.500	ug/L	C	NV	UNKN	0.500	ug/L	D	U		NA			
Phorate		NA					NA				UNFI	3.000	ug/L	D	UJ
Phorate		NA				UNKN	3.000	ug/L	D	U		NA			
Tetraethylpyrophosphate		NA					NA				UNFI	3.000	ug/L	D	UJ
Thionazin		NA					NA				UNFI	3.000	ug/L	D	UJ
Thionazin		NA				UNKN	3.000	ug/L	D	U		NA			
Toxaphene		NA					NA				UNFI	1.000	ug/L	D	U
Toxaphene	UNKN	1.000	ug/L	C	NV	UNKN	1.000	ug/L	D	U		NA			
alpha-BHC		NA					NA				UNFI	0.050	ug/L	D	U
alpha-BHC	UNKN	0.050	ug/L	C	NV	UNKN	0.050	ug/L	D	U		NA			
alpha-Chlordane		NA					NA				UNFI	0.500	ug/L	D	U
alpha-Chlordane	UNKN	0.500	ug/L	C	NV	UNKN	0.500	ug/L	D	U		NA			
beta-BHC		NA					NA				UNFI	0.050	ug/L	D	U
beta-BHC	UNKN	0.050	ug/L	C	NV	UNKN	0.050	ug/L	D	U		NA			
delta-BHC		NA					NA				UNFI	0.050	ug/L	D	U
delta-BHC	UNKN	0.050	ug/L	C	NV	UNKN	0.050	ug/L	D	U		NA			
gamma-BHC (Lindane)		NA					NA				UNFI	0.050	ug/L	D	U
gamma-BHC (Lindane)	UNKN	0.050	ug/L	C	NV	UNKN	0.050	ug/L	D	U		NA			
gamma-Chlordane		NA					NA				UNFI	0.500	ug/L	D	U
gamma-Chlordane	UNKN	0.500	ug/L	C	NV	UNKN	0.500	ug/L	D	U		NA			
General Chemistry															
Ammonia	UNKN	0.100	mg/L	C	NV	UNKN	0.100	mg/L	C	U		NA			
Chloride	UNKN	550.000	mg/L	C	NV	UNKN	519.000	mg/L	C	-		NA			

000826

TABLE D-9
(Continued)

PHASE I - CHEMICAL PARAMETERS

BORING NUMBER		LIME SLUDGE				LIME SLUDGE				LIME SLUDGE			
SAMPLE NUMBER		067008				067500				067900			
SAMPLING DATE		05/14/91				08/29/91				11/06/91			
CHEMICAL PARAMETERS	FLTD	RESULTS	UNITS	L	VQ	FLTD	RESULTS	UNITS	L	VQ	FLTD	RESULTS	UNITS	L	VQ
General Chemistry															
Fluoride	UNKN	0.240	mg/L	C	NV	UNKN	0.270	mg/L	C	-		NA			
Nitrate	UNKN	4.480	mg/L	C	NV	UNKN	6.900	mg/L	C	-		NA			
Phenols	UNKN	0.010	mg/L	C	NV		NA					NA			
Phosphorus	UNKN	0.840	mg/L	C	NV	UNKN	0.050	mg/L	C	J		NA			
Sulfate	UNKN	126.000	mg/L	C	NV	UNKN	2.000	mg/L	C	R		NA			
Sulfide	UNKN	0.500	mg/L	C	NV	UNKN	0.500	mg/L	C	UJ		NA			
Total Organic Carbon	UNKN	5.950	mg/L	C	NV	UNKN	279.000	mg/L	C	-		NA			
Total Organic Halides	UNKN	0.010	mg/L	C	NV		NA					NA			
Total Organic Nitrogen	UNKN	0.786	mg/L	C	NV	UNKN	0.500	mg/L	C	-		NA			

000827

6508

TABLE D-9
(Continued)

PHASE I - CHEMICAL PARAMETERS

BORING NUMBER		LIME SLUDGE			
SAMPLE NUMBER		067907			
SAMPLING DATE		11/07/91			
CHEMICAL PARAMETERS	FLTD	RESULTS	UNITS	L	VQ
Inorganics					
Aluminum	UNKN	0.095	mg/L	D	-
Antimony	UNKN	0.033	mg/L	D	J
Arsenic	UNKN	0.003	mg/L	D	-
Barium	UNKN	0.033	mg/L	D	-
Beryllium	UNKN	0.002	mg/L	D	U
Boron	UNKN	0.243	mg/L	D	-
Cadmium	UNKN	0.007	mg/L	D	-
Calcium	UNKN	43.500	mg/L	D	-
Chromium	UNKN	0.015	mg/L	D	J
Cobalt	UNKN	0.010	mg/L	D	U
Copper	UNKN	0.010	mg/L	D	U
Iron	UNKN	0.023	mg/L	D	-
Lead	UNKN	0.002	mg/L	D	U
Magnesium	UNKN	45.900	mg/L	D	-
Manganese	UNKN	0.114	mg/L	D	-
Mercury	UNKN	0.000	mg/L	D	UJ
Molybdenum	UNKN	0.018	mg/L	D	-
Nickel	UNKN	0.020	mg/L	D	U
Potassium	UNKN	11.400	mg/L	D	-
Selenium	UNKN	0.002	mg/L	D	R
Silicon	UNKN	1.040	mg/L	D	-
Silver	UNKN	0.011	mg/L	D	J
Sodium	UNKN	185.000	mg/L	D	-
Thallium	UNKN	0.002	mg/L	D	R
Tin	UNKN	0.200	mg/L	D	U
Vanadium	UNKN	0.010	mg/L	D	U
Zinc	UNKN	0.008	mg/L	D	-

000828

TABLE D-9
(Continued)

PHASE II - RADIOLOGICAL PARAMETERS

BORING NUMBER		LSP-SW-01				LSP-SW-01		
SAMPLE NUMBER		114595				114593		
		DUPLICATE						
SAMPLING DATE		05/16/93				05/16/93		
RADIOLOGICAL PARAMETERS	FLTD	RESULTS	UNITS	VQ	FLTD	RESULTS	UNITS	VQ
CS-137	UNFI	16.000	pci/L	UJ	UNFI	14.300	pci/L	UJ
GROSS ALPHA	UNFI	9.800	pci/L	UJ	UNFI	3.650	pci/L	UJ
GROSS BETA	UNFI	6.410	pci/L	UJ	UNFI	4.220	pci/L	J
NP-237	UNFI	0.359	pci/L	R	UNFI	0.229	pci/L	UJ
PU-238	UNFI	0.295	pci/L	UJ	UNFI	0.266	pci/L	U
PU-239/240	UNFI	0.141	pci/L	UJ	UNFI	1.290	pci/L	R
RA-226	UNFI	0.201	pci/L	UJ	UNFI	0.106	pci/L	UJ
RA-228	UNFI	1.990	pci/L	U	UNFI	2.870	pci/L	UJ
RU-106	UNFI	78.500	pci/L	UJ	UNFI	127.000	pci/L	UJ
SR-90	UNFI	0.706	pci/L	UJ	UNFI	0.649	pci/L	UJ
TC-99	UNFI	8.100	pci/L	UJ	UNFI	8.100	pci/L	UJ
TH-228	UNFI	0.308	pci/L	UJ	UNFI	0.099	pci/L	UJ
TH-230	UNFI	0.287	pci/L	U	UNFI	0.210	pci/L	J
TH-232	UNFI	0.192	pci/L	UJ	UNFI	0.099	pci/L	UJ
TH-TOTAL	UNFI	1.770	ug/L	UJ	UNFI	0.908	ug/L	UJ
U-234	UNFI	0.284	pci/L	R	UNFI	0.271	pci/L	UJ
U-235/236	UNFI	0.168	pci/L	R	UNFI	0.132	pci/L	UJ
U-238	UNFI	0.285	pci/L	R	UNFI	0.272	pci/L	UJ
U-TOTAL	UNFI	0.060	ug/L	J	UNFI	1.000	ug/L	U

000829

6508

TABLE D-9
(Continued)

PHASE II - CHEMICAL PARAMETERS

BORING NUMBER		LSP-SW-01					LSP-SW-01				
SAMPLE NUMBER		114593					114595 DUPLICATE				
SAMPLING DATE		05/16/93					05/16/93				
CHEMICAL PARAMETERS	FLTD	RESULTS	UNITS	L	VQ	FLTD	RESULTS	UNITS	L	VQ
Inorganics										
Aluminum	UNFI	0.106	mg/L	C	U	UNFI	0.030	mg/L	C	U
Antimony	UNFI	0.005	mg/L	C	-	UNFI	0.005	mg/L	C	UJ
Arsenic	UNFI	0.002	mg/L	C	U	UNFI	0.002	mg/L	C	U
Barium	UNFI	0.018	mg/L	C	-	UNFI	0.016	mg/L	C	-
Beryllium	UNFI	0.002	mg/L	C	U	UNFI	0.002	mg/L	C	U
Cadmium	UNFI	0.005	mg/L	C	U	UNFI	0.005	mg/L	C	U
Calcium	UNFI	17.200	mg/L	C	-	UNFI	15.900	mg/L	C	-
Chromium	UNFI	0.010	mg/L	C	U	UNFI	0.010	mg/L	C	U
Cobalt	UNFI	0.010	mg/L	C	U	UNFI	0.010	mg/L	C	U
Copper	UNFI	0.010	mg/L	C	U	UNFI	0.010	mg/L	C	U
Cyanide	UNFI	0.002	mg/L	C	U	UNFI	0.002	mg/L	C	U
Iron	UNFI	0.020	mg/L	C	U	UNFI	0.020	mg/L	C	U
Lead	UNFI	0.002	mg/L	C	U	UNFI	0.002	mg/L	C	U
Magnesium	UNFI	17.900	mg/L	C	-	UNFI	17.400	mg/L	C	-
Manganese	UNFI	0.010	mg/L	C	U	UNFI	0.010	mg/L	C	U
Mercury	UNFI	0.000	mg/L	C	U	UNFI	0.000	mg/L	C	U
Molybdenum	UNFI	0.010	mg/L	C	U	UNFI	0.010	mg/L	C	U
Nickel	UNFI	0.020	mg/L	C	U	UNFI	0.020	mg/L	C	U
Potassium	UNFI	3.930	mg/L	C	-	UNFI	3.740	mg/L	C	-
Selenium	UNFI	0.002	mg/L	C	U	UNFI	0.002	mg/L	C	U
Silicon	UNFI	0.572	mg/L	C	-	UNFI	0.444	mg/L	C	-
Silver	UNFI	0.010	mg/L	C	U	UNFI	0.010	mg/L	C	U
Sodium	UNFI	40.600	mg/L	C	-	UNFI	39.400	mg/L	C	-
Thallium	UNFI	0.002	mg/L	C	UJ	UNFI	0.002	mg/L	C	U
Vanadium	UNFI	0.010	mg/L	C	U	UNFI	0.010	mg/L	C	U
Zinc	UNFI	0.005	mg/L	C	U	UNFI	0.005	mg/L	C	U
Volatile Organics										
1,1,1-Trichloroethane	UNFI	10.000	ug/L	C	U	UNFI	10.000	ug/L	C	U
1,1,2,2-Tetrachloroethane	UNFI	10.000	ug/L	C	U	UNFI	10.000	ug/L	C	U
1,1,2-Trichloroethane	UNFI	10.000	ug/L	C	U	UNFI	10.000	ug/L	C	U
1,1-Dichloroethane	UNFI	10.000	ug/L	C	U	UNFI	10.000	ug/L	C	U
1,1-Dichloroethene	UNFI	10.000	ug/L	C	U	UNFI	10.000	ug/L	C	U
1,2-Dichloroethane	UNFI	10.000	ug/L	C	U	UNFI	10.000	ug/L	C	U
1,2-Dichloroethene	UNFI	10.000	ug/L	C	U	UNFI	10.000	ug/L	C	U
1,2-Dichloropropane	UNFI	10.000	ug/L	C	U	UNFI	10.000	ug/L	C	U
2-Butanone	UNFI	10.000	ug/L	C	UJ	UNFI	10.000	ug/L	C	UJ
2-Hexanone	UNFI	10.000	ug/L	C	U	UNFI	10.000	ug/L	C	U
4-Methyl-2-pentanone	UNFI	10.000	ug/L	C	UJ	UNFI	10.000	ug/L	C	UJ
Acetone	UNFI	10.000	ug/L	C	UJ	UNFI	10.000	ug/L	C	UJ
Benzene	UNFI	10.000	ug/L	C	U	UNFI	10.000	ug/L	C	U

TABLE D-9
(Continued)

PHASE II - CHEMICAL PARAMETERS

BORING NUMBER		LSP-SW-01					LSP-SW-01				
SAMPLE NUMBER		114593					114595 DUPLICATE				
SAMPLING DATE		05/16/93					05/16/93				
CHEMICAL PARAMETERS	FLTD	RESULTS	UNITS	L	VQ	FLTD	RESULTS	UNITS	L	VQ
Volatile Organics										
Bromodichloromethane	UNFI	10.000	ug/L	C	U	UNFI	10.000	ug/L	C	U
Bromoform	UNFI	10.000	ug/L	C	U	UNFI	10.000	ug/L	C	U
Bromomethane	UNFI	10.000	ug/L	C	U	UNFI	10.000	ug/L	C	U
Carbon Tetrachloride	UNFI	10.000	ug/L	C	U	UNFI	10.000	ug/L	C	U
Carbon disulfide	UNFI	10.000	ug/L	C	U	UNFI	10.000	ug/L	C	U
Chlorobenzene	UNFI	10.000	ug/L	C	U	UNFI	10.000	ug/L	C	U
Chloroethane	UNFI	10.000	ug/L	C	UJ	UNFI	10.000	ug/L	C	UJ
Chloroform	UNFI	10.000	ug/L	C	U	UNFI	10.000	ug/L	C	U
Chloromethane	UNFI	10.000	ug/L	C	U	UNFI	10.000	ug/L	C	U
Dibromochloromethane	UNFI	10.000	ug/L	C	U	UNFI	10.000	ug/L	C	U
Ethylbenzene	UNFI	10.000	ug/L	C	U	UNFI	10.000	ug/L	C	U
Methylene chloride	UNFI	13.000	ug/L	C	UJ	UNFI	12.000	ug/L	C	UJ
Styrene	UNFI	10.000	ug/L	C	U	UNFI	10.000	ug/L	C	U
Tetrachloroethene	UNFI	10.000	ug/L	C	U	UNFI	10.000	ug/L	C	U
Toluene	UNFI	10.000	ug/L	C	U	UNFI	10.000	ug/L	C	U
Trichloroethene	UNFI	10.000	ug/L	C	U	UNFI	10.000	ug/L	C	U
Vinyl Acetate	UNFI	10.000	ug/L	C	UJ	UNFI	10.000	ug/L	C	UJ
Vinyl chloride	UNFI	10.000	ug/L	C	UJ	UNFI	10.000	ug/L	C	UJ
Xylenes, Total	UNFI	10.000	ug/L	C	U	UNFI	10.000	ug/L	C	U
cis-1,3-Dichloropropene	UNFI	10.000	ug/L	C	U	UNFI	10.000	ug/L	C	U
trans-1,3-Dichloropropene	UNFI	10.000	ug/L	C	U	UNFI	10.000	ug/L	C	U
Semivolatile Organics										
1,2,4-Trichlorobenzene	UNFI	10.000	ug/L	C	UJ	UNFI	10.000	ug/L	C	UJ
1,2-Dichlorobenzene	UNFI	10.000	ug/L	C	U	UNFI	10.000	ug/L	C	U
1,3-Dichlorobenzene	UNFI	10.000	ug/L	C	U	UNFI	10.000	ug/L	C	U
1,4-Dichlorobenzene	UNFI	10.000	ug/L	C	U	UNFI	10.000	ug/L	C	U
2,4,5-Trichlorophenol	UNFI	25.000	ug/L	C	U	UNFI	25.000	ug/L	C	U
2,4,6-Trichlorophenol	UNFI	10.000	ug/L	C	U	UNFI	10.000	ug/L	C	U
2,4-Dichlorophenol	UNFI	10.000	ug/L	C	U	UNFI	10.000	ug/L	C	U
2,4-Dimethylphenol	UNFI	10.000	ug/L	C	U	UNFI	10.000	ug/L	C	U
2,4-Dinitrophenol	UNFI	25.000	ug/L	C	R	UNFI	25.000	ug/L	C	R
2,4-Dinitrotoluene	UNFI	10.000	ug/L	C	U	UNFI	10.000	ug/L	C	U
2,6-Dinitrotoluene	UNFI	10.000	ug/L	C	U	UNFI	10.000	ug/L	C	U
2-Benzyl-4-chlorophenol	UNFI	10.000	ug/L	C	U	UNFI	10.000	ug/L	C	U
2-Chloronaphthalene	UNFI	10.000	ug/L	C	U	UNFI	10.000	ug/L	C	U
2-Chlorophenol	UNFI	10.000	ug/L	C	U	UNFI	10.000	ug/L	C	U
2-Methylnaphthalene	UNFI	10.000	ug/L	C	U	UNFI	10.000	ug/L	C	U
2-Methylphenol	UNFI	10.000	ug/L	C	U	UNFI	10.000	ug/L	C	U
2-Nitroaniline	UNFI	25.000	ug/L	C	U	UNFI	25.000	ug/L	C	U
2-Nitrophenol	UNFI	10.000	ug/L	C	U	UNFI	10.000	ug/L	C	U

000831

6508

TABLE D-9
(Continued)

PHASE II - CHEMICAL PARAMETERS

BORING NUMBER		LSP-SW-01					LSP-SW-01			
SAMPLE NUMBER		114593					114595 DUPLICATE			
SAMPLING DATE		05/16/93					05/16/93			
CHEMICAL PARAMETERS	FLTD	RESULTS	UNITS	L	VQ	FLTD	RESULTS	UNITS	L	VQ
Semivolatile Organics										
3,3'-Dichlorobenzidine	UNFI	10.000	ug/L	C	U	UNFI	10.000	ug/L	C	U
3-Nitroaniline	UNFI	25.000	ug/L	C	U	UNFI	25.000	ug/L	C	U
4,6-Dinitro-2-methylphenol	UNFI	25.000	ug/L	C	UJ	UNFI	25.000	ug/L	C	UJ
4-Bromophenyl phenyl ether	UNFI	10.000	ug/L	C	U	UNFI	10.000	ug/L	C	U
4-Chloro-3-methylphenol	UNFI	10.000	ug/L	C	U	UNFI	10.000	ug/L	C	U
4-Chlorophenylphenyl ether	UNFI	10.000	ug/L	C	U	UNFI	10.000	ug/L	C	U
4-Methylphenol	UNFI	10.000	ug/L	C	U	UNFI	10.000	ug/L	C	U
4-Nitroaniline	UNFI	25.000	ug/L	C	U	UNFI	25.000	ug/L	C	U
4-Nitrophenol	UNFI	25.000	ug/L	C	UJ	UNFI	25.000	ug/L	C	UJ
Acenaphthene	UNFI	10.000	ug/L	C	U	UNFI	10.000	ug/L	C	U
Acenaphthylene	UNFI	10.000	ug/L	C	U	UNFI	10.000	ug/L	C	U
Anthracene	UNFI	10.000	ug/L	C	U	UNFI	10.000	ug/L	C	U
Benzo(a)anthracene	UNFI	10.000	ug/L	C	U	UNFI	10.000	ug/L	C	U
Benzo(a)pyrene	UNFI	10.000	ug/L	C	U	UNFI	10.000	ug/L	C	U
Benzo(b)fluoranthene	UNFI	10.000	ug/L	C	U	UNFI	10.000	ug/L	C	U
Benzo(g,h,i)perylene	UNFI	10.000	ug/L	C	U	UNFI	10.000	ug/L	C	U
Benzo(k)fluoranthene	UNFI	10.000	ug/L	C	U	UNFI	10.000	ug/L	C	U
Benzoic acid	UNFI	50.000	ug/L	C	UJ	UNFI	50.000	ug/L	C	UJ
Benzyl alcohol	UNFI	10.000	ug/L	C	U	UNFI	10.000	ug/L	C	U
Butyl benzyl phthalate	UNFI	10.000	ug/L	C	U	UNFI	10.000	ug/L	C	U
Carbazole	UNFI	10.000	ug/L	C	U	UNFI	10.000	ug/L	C	U
Chrysene	UNFI	10.000	ug/L	C	U	UNFI	10.000	ug/L	C	U
Di-n-butyl phthalate	UNFI	10.000	ug/L	C	U	UNFI	10.000	ug/L	C	U
Di-n-octyl phthalate	UNFI	10.000	ug/L	C	UJ	UNFI	10.000	ug/L	C	UJ
Dibenzo(a,h)anthracene	UNFI	10.000	ug/L	C	UJ	UNFI	10.000	ug/L	C	UJ
Dibenzofuran	UNFI	10.000	ug/L	C	U	UNFI	10.000	ug/L	C	U
Diethyl phthalate	UNFI	10.000	ug/L	C	U	UNFI	10.000	ug/L	C	U
Dimethyl phthalate	UNFI	10.000	ug/L	C	U	UNFI	10.000	ug/L	C	U
Fluoranthene	UNFI	10.000	ug/L	C	U	UNFI	10.000	ug/L	C	U
Fluorene	UNFI	10.000	ug/L	C	U	UNFI	10.000	ug/L	C	U
Hexachlorobenzene	UNFI	10.000	ug/L	C	U	UNFI	10.000	ug/L	C	U
Hexachlorobutadiene	UNFI	10.000	ug/L	C	U	UNFI	10.000	ug/L	C	U
Hexachlorocyclopentadiene	UNFI	10.000	ug/L	C	U	UNFI	10.000	ug/L	C	U
Hexachloroethane	UNFI	10.000	ug/L	C	U	UNFI	10.000	ug/L	C	U
Indeno(1,2,3-cd)pyrene	UNFI	10.000	ug/L	C	U	UNFI	10.000	ug/L	C	U
Isophorone	UNFI	10.000	ug/L	C	U	UNFI	10.000	ug/L	C	U
N-Nitroso-di-n-propylamine	UNFI	10.000	ug/L	C	U	UNFI	10.000	ug/L	C	U
N-Nitrosodiphenylamine	UNFI	10.000	ug/L	C	U	UNFI	10.000	ug/L	C	U
Naphthalene	UNFI	10.000	ug/L	C	U	UNFI	10.000	ug/L	C	U
Nitrobenzene	UNFI	10.000	ug/L	C	U	UNFI	10.000	ug/L	C	U
Pentachlorophenol	UNFI	25.000	ug/L	C	U	UNFI	25.000	ug/L	C	U
Phenanthrene	UNFI	10.000	ug/L	C	U	UNFI	10.000	ug/L	C	U

000832

TABLE D-9
(Continued)

PHASE II - CHEMICAL PARAMETERS

BORING NUMBER		LSP-SW-01					LSP-SW-01			
SAMPLE NUMBER		114593					114595 DUPLICATE			
SAMPLING DATE		05/16/93					05/16/93			
CHEMICAL PARAMETERS	FLTD	RESULTS	UNITS	L	VQ	FLTD	RESULTS	UNITS	L	VQ
Semivolatile Organics										
Phenol	UNFI	10.000	ug/L	C	U	UNFI	10.000	ug/L	C	U
Pyrene	UNFI	10.000	ug/L	C	U	UNFI	10.000	ug/L	C	U
bis(2-Chloroethoxy)methane	UNFI	10.000	ug/L	C	U	UNFI	10.000	ug/L	C	U
bis(2-Chloroethyl)ether	UNFI	10.000	ug/L	C	U	UNFI	10.000	ug/L	C	U
bis(2-Chloroisopropyl) ether	UNFI	10.000	ug/L	C	U	UNFI	10.000	ug/L	C	U
bis(2-Ethylhexyl) phthalate	UNFI	2.000	ug/L	C	J	UNFI	10.000	ug/L	C	UJ
p-Chloroaniline	UNFI	10.000	ug/L	C	U	UNFI	10.000	ug/L	C	U
Pesticide Organics/PCBs										
4,4'-DDD	UNFI	0.100	ug/L	C/	U	UNFI	0.100	ug/L	C	U
4,4'-DDE	UNFI	0.100	ug/L	C	U	UNFI	0.100	ug/L	C	U
4,4'-DDT	UNFI	0.100	ug/L	C	U	UNFI	0.100	ug/L	C	U
Aldrin	UNFI	0.050	ug/L	C	U	UNFI	0.050	ug/L	C	U
Aroclor-1016	UNFI	1.000	ug/L	C	U	UNFI	1.000	ug/L	C	U
Aroclor-1221	UNFI	2.000	ug/L	C	U	UNFI	2.000	ug/L	C	U
Aroclor-1232	UNFI	1.000	ug/L	C	U	UNFI	1.000	ug/L	C	U
Aroclor-1242	UNFI	1.000	ug/L	C	U	UNFI	1.000	ug/L	C	U
Aroclor-1248	UNFI	1.000	ug/L	C	U	UNFI	1.000	ug/L	C	U
Aroclor-1254	UNFI	1.000	ug/L	C	U	UNFI	1.000	ug/L	C	U
Aroclor-1260	UNFI	1.000	ug/L	C	U	UNFI	1.000	ug/L	C	U
Dieldrin	UNFI	0.100	ug/L	C	U	UNFI	0.100	ug/L	C	U
Endosulfan II	UNFI	0.100	ug/L	C	U	UNFI	0.100	ug/L	C	U
Endosulfan sulfate	UNFI	0.100	ug/L	C	U	UNFI	0.100	ug/L	C	U
Endosulfan-I	UNFI	0.050	ug/L	C	U	UNFI	0.050	ug/L	C	U
Endrin	UNFI	0.100	ug/L	C	U	UNFI	0.100	ug/L	C	U
Endrin aldehyde	UNFI	0.100	ug/L	C	U	UNFI	0.100	ug/L	C	U
Endrin ketone	UNFI	0.100	ug/L	C	U	UNFI	0.100	ug/L	C	U
Heptachlor	UNFI	0.050	ug/L	C	U	UNFI	0.050	ug/L	C	U
Heptachlor epoxide	UNFI	0.050	ug/L	C	U	UNFI	0.050	ug/L	C	U
Methoxychlor	UNFI	0.500	ug/L	C	U	UNFI	0.500	ug/L	C	U
Toxaphene	UNFI	5.000	ug/L	C	U	UNFI	5.000	ug/L	C	U
alpha-BHC	UNFI	0.050	ug/L	C	U	UNFI	0.002	ug/L	C	J
alpha-Chlordane	UNFI	0.050	ug/L	C	U	UNFI	0.050	ug/L	C	U
beta-BHC	UNFI	0.050	ug/L	C	U	UNFI	0.050	ug/L	C	U
delta-BHC	UNFI	0.050	ug/L	C	U	UNFI	0.050	ug/L	C	U
gamma-BHC (Lindane)	UNFI	0.050	ug/L	C	U	UNFI	0.004	ug/L	C	J
gamma-Chlordane	UNFI	0.050	ug/L	C	U	UNFI	0.050	ug/L	C	U
General Chemistry										
Alkalinity	UNFI	63.000	mg/L	B	-	UNFI	60.000	mg/L	B	-

000833

6508

TABLE D-9
(Continued)

PHASE II - CHEMICAL PARAMETERS

BORING NUMBER		LSP-SW-01					LSP-SW-01			
SAMPLE NUMBER		114593					114595 DUPLICATE			
SAMPLING DATE		05/16/93					05/16/93			
CHEMICAL PARAMETERS	FLTD	RESULTS	UNITS	L	VQ	FLTD	RESULTS	UNITS	L	VQ
General Chemistry										
Ammonia	UNFI	0.100	mg/L	B	U	UNFI	0.100	mg/L	B	U
Chloride	UNFI	72.000	mg/L	B	-	UNFI	68.600	mg/L	B	-
Fluoride	UNFI	0.110	mg/L	B	-	UNFI	0.100	mg/L	B	-
Nitrate	UNFI	0.100	mg/L	B	R	UNFI	0.100	mg/L	B	R
Phenols	UNFI	0.010	mg/L	B	U	UNFI	0.010	mg/L	B	U
Sulfate	UNFI	39.300	mg/L	B	-	UNFI	43.000	mg/L	B	-
Sulfide	UNFI	0.500	mg/L	B	U	UNFI	0.500	mg/L	B	U
Total Kjeldahl Nitrogen	UNFI	0.170	mg/L	B	-	UNFI	0.150	mg/L	B	-
Total Organic Carbon	UNFI	2.240	mg/L	B	-	UNFI	2.320	mg/L	B	-
Total Organic Halides	UNFI	0.023	mg/L	B	J	UNFI	0.023	mg/L	B	-
Total Organic Nitrogen	UNFI	0.170	mg/L	B	-	UNFI	0.150	mg/L	B	-
Total Phosphorous	UNFI	0.020	mg/L	B	U	UNFI	0.030	mg/L	B	-

000834

TABLE D-10

TABLE D-10

SURFACE WATER ANALYSIS RCRA FACILITY ASSESSMENT
NORTH LIME SLUDGE POND

ANALYTE	HAZARDOUS WASTE THRESHOLD	SAMPLE LOCATION, DEPTH (ft), AND NUMBER		
		SP-4 WATER 911120-087	SP-5 WATER 911120-088	SP-6 WATER 911120-089
TCLP Metals (mg/l):				
Arsenic	5.00	<0.20	<0.20	<0.20
Barium	100.00	<0.20	<0.20	<0.20
Cadmium	1.00	<0.10	<0.10	<0.10
Chromium	5.00	<0.50	<0.50	<0.50
Lead	5.00	<0.20	<0.20	<0.20
Mercury	0.20	<0.0002	<0.0002	<0.0002
Selenium	1.00	<0.557	<0.557	<0.557
Silver	5.00	<0.050	<0.050	<0.050
Total Volatiles Organics (mg/l):				
Acetone		0.0165	<0.010	<0.010
Benzene		<0.005	<0.005	<0.005
2-Butanone		0.0529	0.051	0.496
Carbon Disulfide		<0.005	<0.005	<0.005
Carbon Tetrachloride		<0.005	<0.005	<0.005
Chlorobenzene		<0.005	<0.005	<0.005
Chloroethane		NR	NR	NR
Chloromethane		NR	NR	NR
Cyclohexanone		<0.160	<0.160	<0.160
o-Dichlorobenzene		NR	NR	NR
1,1-Dichloroethene		NR	NR	NR
1,2-Dichloroethane		NR	NR	NR
trans-1,2-Dichloroethene		NR	NR	NR
Ethyl Acetate		<0.020	<0.020	<0.020
Ethyl Benzene		<0.005	<0.005	<0.005
Ethyl Ether		<0.005	<0.005	<0.005
Methylene Chloride		<0.005	<0.005	<0.005
4-Methyl-2-Pentanone		<0.010	<0.010	<0.010
2-Nitropropane		<0.070	<0.070	<0.070
Tetrachloroethylene		<0.005	<0.005	<0.005
Toluene		<0.005	<0.005	<0.005
Trichloroethene		<0.005	<0.005	<0.005
1,1,1-Trichloroethane		<0.005	<0.005	<0.005
1,1,2-Trichloroethane		<0.005	<0.005	<0.005
Trichlorofluoromethane		<0.005	<0.005	<0.005
Trichlorotrifluoroethane		<0.005	<0.005	<0.005
Vinyl Chloride		NR	NR	NR
m,p-Xylenes		NR	NR	NR
o-Xylene		NR	NR	NR
Xylenes (Total)		<0.005	<0.005	<0.005

NR = Analysis not requested on this sample

TABLE D-10
(Continued)

SURFACE WATER ANALYSIS RCRA FACILITY ASSESSMENT
NORTH LIME SLUDGE POND

ANALYTE	HAZARDOUS WASTE THRESHOLD	SAMPLE LOCATION, DEPTH (ft), AND NUMBER		
		SP-4 WATER 911120-087	SP-5 WATER 911120-088	SP-6 WATER 911120-089
TCLP Volatile Organics (mg/l):				
Benzene	0.50	<0.025	<0.025	
2-Butanone	200.00	<0.050	<0.050	
Carbon Tetrachloride	0.50	<0.025	<0.025	
Chlorobenzene	100.00	<0.025	<0.025	
Chloroform	6.00	<0.025	<0.025	
1,4-Dichlorobenzene	7.50	NR	NR	
1,2-Dichloroethane	0.50	<0.025	<0.025	
1,1-Dichlorethylene	0.70	<0.025	<0.025	
Tetrachloroethylene	0.70	<0.025	<0.025	
Trichloroethylene	0.50	<0.025	<0.025	
Vinyl Chloride	0.20	<0.050	<0.050	
TCLP Semi Volatiles (mg/l):				
m,p-Cresol	200.00	<0.020	<0.020	<0.020
o-Cresol	200.00	<0.020	<0.020	<0.020
1,4-Dichlorobenzene	7.50	<0.020	<0.020	<0.020
2,4-Dinitrotoluene	0.13	<0.020	<0.020	<0.020
Hexachlorobenzene	0.13	<0.020	<0.020	<0.020
Hexachloroethane	3.00	<0.020	<0.020	<0.020
Hexachloro-1,3-butadiene	0.50	<0.020	<0.020	<0.020
Nitrobenzene	2.00	<0.020	<0.020	<0.020
Pentachlorophenol	100.00	<0.100	<0.100	<0.100
Pyridine	5.00	<0.020	<0.020	<0.020
2,4,5-Trichlorophenol	400.00	<0.020	<0.020	<0.020
2,4,6-Trichlorophenol	2.00	<0.020	<0.020	<0.020
TCLP Pesticides (mg/l):				
Chlordane	0.030	<0.0001	<0.0001	
Endrin	0.020	<0.0001	<0.0001	
Heptachlor	0.008	<0.00005	<0.00005	
Heptachlor Epoxide	0.008	<0.00005	<0.00005	
Lindane	0.400	<0.00005	<0.00005	
Methoxychlor	10.000	<0.0005	<0.0005	
Toxaphene	0.500	<0.001	<0.001	
TCLP Herbicides (mg/l):				
2,4-D	10.00	<0.001	<0.001	
Silvex	1.00	<0.0005	<0.0005	

NR = Analysis not requested on this sample

000836

TABLE D-11

TABLE D-11A

LIME SLUDGE PONDS
RI/FS GROUNDWATER RESULTS
OPERABLE UNIT 2 REMEDIAL INVESTIGATION
FERNALD ENVIRONMENTAL MANAGEMENT PROJECT

PHASE I - RADIOLOGICAL PARAMETERS

BORING NUMBER		1039				1039				1039		
SAMPLE NUMBER		003928				003179				003491		
SAMPLING DATE		02/05/89				05/11/88				08/10/88		
RADIOLOGICAL PARAMETERS	FLTD	RESULTS	UNITS	VQ	FLTD	RESULTS	UNITS	VQ	FLTD	RESULTS	UNITS	VQ
CS-137	*U	20.000	pci/L	R	*U	20.000	pci/L	R	*U	20.000	pci/L	R
NP-237	*U	1.000	pci/L	U	*U	1.000	pci/L	U	*U	1.000	pci/L	UJ
PU-238	*U	1.000	pci/L	UJ	*U	1.000	pci/L	U	*U	1.000	pci/L	UJ
PU-239/240	*U	1.000	pci/L	UJ	*U	1.000	pci/L	U	*U	1.000	pci/L	UJ
RA-226	*U	1.000	pci/L	U	*U	1.000	pci/L	U	*U	1.000	pci/L	U
RA-228	*U	3.000	pci/L	UJ	*U	3.000	pci/L	U	*U	3.000	pci/L	U
RU-106	*U	150.000	pci/L	R	*U	150.000	pci/L	R	*U	150.000	pci/L	R
SR-90	*U	5.000	pci/L	U	*U	5.000	pci/L	U	*U	5.000	pci/L	U
TC-99	*U	30.000	pci/L	UJ	*U	30.000	pci/L	U	*U	30.000	pci/L	U
TH-228	*U	1.000	pci/L	U	*U	1.000	pci/L	U	*U	1.000	pci/L	UJ
TH-230	*U	1.400	pci/L	-	*U	1.000	pci/L	U	*U	1.000	pci/L	UJ
TH-232	*U	1.000	pci/L	U	*U	1.000	pci/L	U	*U	1.000	pci/L	UJ
TH-TOTAL	*U	4.000	ug/L	U		NA			*U	12.000	ug/L	UJ
U-234	*U	1.400	pci/L	-	*U	1.000	pci/L	U	*U	1.000	pci/L	UJ
U-235/236	*U	1.000	pci/L	U	*U	1.000	pci/L	U	*U	1.000	pci/L	UJ
U-238	*U	1.800	pci/L	-	*U	1.000	pci/L	U	*U	1.000	pci/L	UJ
U-TOTAL	*U	1.000	ug/L	-	*U	2.000	ug/L	UJ	*U	1.000	ug/L	-

000832

TABLE D-11A
(Continued)

PHASE I - RADIOLOGICAL PARAMETERS

BORING NUMBER	1039				1041				1041			
SAMPLE NUMBER	003733				003924				003180			
SAMPLING DATE	11/20/88				03/01/89				05/11/88			
RADIOLOGICAL PARAMETERS	FLTD	RESULTS	UNITS	VQ	FLTD	RESULTS	UNITS	VQ	FLTD	RESULTS	UNITS	VQ
CS-137	*U	10.000	pci/L	R	*U	20.000	pci/L	R	*U	20.000	pci/L	R
NP-237	*U	0.200	pci/L	UJ	*U	1.000	pci/L	U	*U	1.000	pci/L	U
PU-238	*U	0.060	pci/L	UJ	*U	1.000	pci/L	R	*U	1.000	pci/L	U
PU-239/240	*U	0.060	pci/L	UJ	*U	1.000	pci/L	R	*U	1.000	pci/L	U
RA-226	*U	0.300	pci/L	J	*U	1.000	pci/L	U	*U	1.000	pci/L	U
RA-228	*U	2.300	pci/L	UJ	*U	3.000	pci/L	UJ	*U	3.800	pci/L	-
RU-106	*U	86.000	pci/L	R	*U	150.000	pci/L	R	*U	150.000	pci/L	R
SR-90	*U	1.200	pci/L	UJ	*U	5.000	pci/L	U	*U	5.000	pci/L	U
TC-99	*U	26.000	pci/L	UJ	*U	30.000	pci/L	U	*U	30.000	pci/L	U
TH-228	*U	0.700	pci/L	UJ	*U	1.100	pci/L	J	*U	1.200	pci/L	-
TH-230	*U	0.700	pci/L	UJ	*U	1.400	pci/L	-	*U	1.600	pci/L	-
TH-232	*U	0.700	pci/L	UJ	*U	1.000	pci/L	U	*U	1.000	pci/L	U
TH-TOTAL	*U	6.200	ug/L	UJ	*U	8.000	ug/L	D		NA		
U-234	*U	0.500	pci/L	J	*U	2.400	pci/L	R	*U	1.800	pci/L	-
U-235/236	*U	0.300	pci/L	UJ	*U	1.000	pci/L	U	*U	1.000	pci/L	U
U-238	*U	0.300	pci/L	J	*U	2.400	pci/L	-	*U	2.400	pci/L	-
U-TOTAL	*U	1.800	ug/L	J	*U	8.000	ug/L	-	*U	9.000	ug/L	J

000538

TABLE D-11A
(Continued)

PHASE I - RADIOLOGICAL PARAMETERS

BORING NUMBER	1041				1041				1042			
SAMPLE NUMBER	003490				003732				003922			
SAMPLING DATE	08/10/88				11/17/88				03/01/89			
RADIOLOGICAL PARAMETERS	FLTD	RESULTS	UNITS	VQ	FLTD	RESULTS	UNITS	VQ	FLTD	RESULTS	UNITS	VQ
CS-137	*U	20.000	pci/L	R	*U	20.000	pci/L	R	*U	20.000	pci/L	R
NP-237	*U	1.000	pci/L	UJ	*U	1.000	pci/L	U	*U	1.000	pci/L	U
PU-238	*U	1.000	pci/L	UJ	*U	1.000	pci/L	UJ	*U	1.000	pci/L	R
PU-239/240	*U	1.000	pci/L	UJ	*U	1.000	pci/L	UJ	*U	1.000	pci/L	R
RA-226	*U	1.000	pci/L	U	*U	1.000	pci/L	U	*U	1.000	pci/L	U
RA-228	*U	3.000	pci/L	U	*U	3.000	pci/L	U	*U	3.000	pci/L	UJ
RU-106	*U	150.000	pci/L	R	*U	150.000	pci/L	R	*U	150.000	pci/L	R
SR-90	*U	5.000	pci/L	U	*U	5.000	pci/L	U	*U	5.000	pci/L	U
TC-99	*U	30.000	pci/L	U	*U	30.000	pci/L	U	*U	30.000	pci/L	U
TH-228	*U	1.000	pci/L	UJ	*U	1.000	pci/L	U	*U	1.000	pci/L	U
TH-230	*U	1.000	pci/L	UJ	*U	1.000	pci/L	U	*U	1.000	pci/L	U
TH-232	*U	1.000	pci/L	UJ	*U	1.000	pci/L	U	*U	1.000	pci/L	U
TH-TOTAL	*U	10.000	ug/L	UJ	*U	2.000	ug/L	U	*U	3.000	ug/L	U
U-234	*U	2.100	pci/L	J	*U	1.400	pci/L	-	*U	9.500	pci/L	R
U-235/236	*U	1.000	pci/L	UJ	*U	1.000	pci/L	U	*U	1.000	pci/L	U
U-238	*U	1.700	pci/L	J	*U	2.100	pci/L	-	*U	9.700	pci/L	-
U-TOTAL	*U	6.000	ug/L	-	*U	6.000	ug/L	-	*U	30.000	ug/L	-

TABLE D-11A
(Continued)

PHASE I - RADIOLOGICAL PARAMETERS

BORING NUMBER	1042				1042				1042			
SAMPLE NUMBER	003182				003416				003723			
SAMPLING DATE	05/11/88				08/09/88				11/17/88			
RADIOLOGICAL PARAMETERS	FLTD	RESULTS	UNITS	VQ	FLTD	RESULTS	UNITS	VQ	FLTD	RESULTS	UNITS	VQ
CS-137	*U	20.000	pci/L	R		NA			*U	20.000	pci/L	R
CS-137		NA			UNKN	20.000	pci/L	R		NA		
NP-237	*U	1.000	pci/L	U		NA			*U	1.000	pci/L	U
NP-237		NA			UNKN	1.000	pci/L	U		NA		
PU-238	*U	1.000	pci/L	U		NA			*U	1.000	pci/L	UJ
PU-238		NA			UNKN	1.000	pci/L	U		NA		
PU-239/240	*U	1.000	pci/L	U		NA			*U	1.000	pci/L	UJ
PU-239/240		NA			UNKN	1.000	pci/L	U		NA		
RA-226	*U	1.000	pci/L	U		NA			*U	1.000	pci/L	U
RA-226		NA			UNKN	1.000	pci/L	UJ		NA		
RA-228	*U	3.000	pci/L	U		NA			*U	3.000	pci/L	U
RA-228		NA			UNKN	3.400	pci/L	J		NA		
RU-106	*U	150.000	pci/L	R		NA			*U	150.000	pci/L	R
RU-106		NA			UNKN	150.000	pci/L	R		NA		
SR-90	*U	5.000	pci/L	U		NA			*U	5.000	pci/L	U
SR-90		NA			UNKN	5.000	pci/L	U		NA		
TC-99	*U	30.000	pci/L	U		NA			*U	30.000	pci/L	U
TC-99		NA			UNKN	30.000	pci/L	U		NA		
TH-228	*U	1.000	pci/L	U		NA			*U	1.000	pci/L	U
TH-228		NA			UNKN	1.000	pci/L	U		NA		
TH-230	*U	1.000	pci/L	U		NA			*U	1.000	pci/L	U
TH-230		NA			UNKN	1.000	pci/L	U		NA		
TH-232	*U	1.000	pci/L	U		NA			*U	1.000	pci/L	U
TH-232		NA			UNKN	1.000	pci/L	U		NA		
TH-TOTAL		NA				NA			*U	5.000	ug/L	U
TH-TOTAL		NA			UNKN	3.000	ug/L	U		NA		
U-234	*U	1.000	pci/L	U		NA			*U	3.300	pci/L	-
U-234		NA			UNKN	2.500	pci/L	-		NA		
U-235/236	*U	1.000	pci/L	U		NA			*U	1.000	pci/L	U
U-235/236		NA			UNKN	1.000	pci/L	U		NA		
U-238	*U	1.000	pci/L	U		NA			*U	3.200	pci/L	-
U-238		NA			UNKN	2.200	pci/L	-		NA		
U-TOTAL	*U	7.000	ug/L	J		NA			*U	11.000	ug/L	-
U-TOTAL		NA			UNKN	6.000	ug/L	-		NA		

000840

TABLE D-11A
(Continued)

PHASE I - RADIOLOGICAL PARAMETERS

BORING NUMBER		1134				1210				1229		
SAMPLE NUMBER		045426				045739				045780		
SAMPLING DATE		10/18/89				10/22/89				10/23/89		
RADIOLOGICAL PARAMETERS	FLTD	RESULTS	UNITS	VQ	FLTD	RESULTS	UNITS	VQ	FLTD	RESULTS	UNITS	VQ
U-TOTAL	*U	21.000	ug/L	-	*U	8.400	ug/L	-	*U	58.000	ug/L	J

TABLE D-11A
(Continued)

PHASE I - RADIOLOGICAL PARAMETERS

BORING NUMBER		2042				2042				2042		
SAMPLE NUMBER		066845				003921				004036 DUPLICATE		
SAMPLING DATE		01/05/90				03/01/89				03/01/89		
RADIOLOGICAL PARAMETERS	FLTD	RESULTS	UNITS	VQ	FLTD	RESULTS	UNITS	VQ	FLTD	RESULTS	UNITS	VQ
CS-137		NA			*U	20.000	pci/L	R	*U	20.000	pci/L	R
NP-237		NA			*U	1.000	pci/L	U	*U	1.000	pci/L	U
PU-238		NA			*U	1.000	pci/L	R	*U	1.000	pci/L	R
PU-239/240		NA			*U	1.000	pci/L	R	*U	1.000	pci/L	R
RA-226		NA			*U	1.000	pci/L	U	*U	1.000	pci/L	U
RA-228		NA			*U	3.000	pci/L	UJ	*U	3.000	pci/L	UJ
RU-106		NA			*U	150.000	pci/L	R	*U	150.000	pci/L	R
SR-90		NA			*U	5.000	pci/L	U	*U	5.000	pci/L	U
TC-99		NA			*U	30.000	pci/L	U	*U	30.000	pci/L	U
TC-99	UNKN	30.000	pci/L	U		NA				NA		
TH-228		NA			*U	1.000	pci/L	U	*U	1.000	pci/L	U
TH-228	UNKN	1.000	pci/L	U		NA				NA		
TH-230		NA			*U	1.000	pci/L	U	*U	1.000	pci/L	U
TH-230	UNKN	1.240	pci/L	J		NA				NA		
TH-232		NA			*U	1.000	pci/L	U	*U	1.000	pci/L	U
TH-TOTAL		NA			*U	3.000	ug/L	D	*U	3.000	ug/L	U
U-234		NA			*U	1.200	pci/L	R	*U	1.200	pci/L	R
U-234	UNKN	1.910	pci/L	R		NA				NA		
U-235	UNKN	1.000	pci/L	U		NA				NA		
U-235/236		NA			*U	1.000	pci/L	U	*U	1.000	pci/L	U
U-238		NA			*U	1.000	pci/L	U	*U	1.000	pci/L	U
U-238	UNKN	1.870	pci/L	-		NA				NA		
U-TOTAL		NA			*U	3.000	ug/L	-	*U	3.000	ug/L	-
U-TOTAL	UNKN	7.450	ug/L	J		NA				NA		

008822

TABLE D-11A
(Continued)

PHASE I - RADIOLOGICAL PARAMETERS

BORING NUMBER		2042				2042				2042		
SAMPLE NUMBER		003150				003415				003722		
SAMPLING DATE		05/04/88				08/09/88				11/17/88		
RADIOLOGICAL PARAMETERS	FLTD	RESULTS	UNITS	VQ	FLTD	RESULTS	UNITS	VQ	FLTD	RESULTS	UNITS	VQ
CS-137	*U	20.000	pci/L	R	*U	20.000	pci/L	R	*U	20.000	pci/L	R
NP-237	*U	1.000	pci/L	UJ	*U	1.000	pci/L	UJ	*U	1.000	pci/L	U
PU-238	*U	1.000	pci/L	UJ	*U	1.000	pci/L	U	*U	1.000	pci/L	U
PU-239/240	*U	1.000	pci/L	UJ	*U	1.000	pci/L	U	*U	1.000	pci/L	U
RA-226	*U	1.000	pci/L	U	*U	1.000	pci/L	UJ	*U	1.000	pci/L	U
RA-228	*U	3.000	pci/L	U	*U	3.000	pci/L	U	*U	3.000	pci/L	U
RU-106	*U	150.000	pci/L	R	*U	150.000	pci/L	R	*U	150.000	pci/L	R
SR-90	*U	5.000	pci/L	U	*U	5.000	pci/L	U	*U	5.000	pci/L	U
TC-99	*U	30.000	pci/L	U	*U	30.000	pci/L	U	*U	30.000	pci/L	U
TH-228	*U	1.600	pci/L	J	*U	1.000	pci/L	U	*U	1.000	pci/L	U
TH-230	*U	1.000	pci/L	J	*U	1.000	pci/L	U	*U	1.000	pci/L	U
TH-232	*U	1.000	pci/L	UJ	*U	1.000	pci/L	U	*U	1.000	pci/L	U
TH-TOTAL		NA			*U	3.000	pci/L	U	*U	2.000	ug/L	U
U-234	*U	1.400	pci/L	J	*U	1.000	pci/L	U	*U	1.000	pci/L	U
U-235/236	*U	1.000	pci/L	UJ	*U	1.000	pci/L	U	*U	1.000	pci/L	U
U-238	*U	1.500	pci/L	J	*U	1.000	pci/L	U	*U	1.000	pci/L	U
U-TOTAL	*U	4.000	ug/L	J	*U	2.000	pci/L	-	*U	2.000	ug/L	-

TABLE D-11A
(Continued)

PHASE I - RADIOLOGICAL PARAMETERS

BORING NUMBER	4101				4101				4101			
SAMPLE NUMBER	003918				003207				003208 DUPLICATE			
SAMPLING DATE	03/15/89				05/19/88				05/19/88			
RADIOLOGICAL PARAMETERS	FLTD	RESULTS	UNITS	VQ	FLTD	RESULTS	UNITS	VQ	FLTD	RESULTS	UNITS	VQ
CS-137	*U	20.000	pci/L	R		NA				NA		
CS-137		NA			UNKN	20.000	pci/L	R	UNKN	20.000	pci/L	R
NP-237	*U	1.000	pci/L	UJ		NA				NA		
NP-237		NA			UNKN	1.000	pci/L	U	UNKN	1.000	pci/L	U
PU-238	*U	1.000	pci/L	U		NA				NA		
PU-238		NA			UNKN	1.000	pci/L	U	UNKN	1.000	pci/L	U
PU-239/240	*U	1.000	pci/L	U		NA				NA		
PU-239/240		NA			UNKN	1.000	pci/L	U	UNKN	1.000	pci/L	U
RA-226	*U	1.000	pci/L	U		NA				NA		
RA-226		NA			UNKN	1.000	pci/L	U	UNKN	1.000	pci/L	U
RA-228	*U	3.000	pci/L	UJ		NA				NA		
RA-228		NA			UNKN	3.000	pci/L	U	UNKN	4.500	pci/L	J
RU-106	*U	150.000	pci/L	R		NA				NA		
RU-106		NA			UNKN	150.000	pci/L	R	UNKN	150.000	pci/L	R
SR-90	*U	5.000	pci/L	U		NA				NA		
SR-90		NA			UNKN	5.000	pci/L	U	UNKN	5.000	pci/L	U
TC-99	*U	33.000	pci/L	UJ		NA				NA		
TC-99		NA			UNKN	30.000	pci/L	U	UNKN	30.000	pci/L	U
TH-228	*U	1.000	pci/L	U		NA				NA		
TH-228		NA			UNKN	1.000	pci/L	U	UNKN	1.000	pci/L	U
TH-230	*U	1.000	pci/L	U		NA				NA		
TH-230		NA			UNKN	1.000	pci/L	U	UNKN	1.000	pci/L	U
TH-232	*U	1.000	pci/L	U		NA				NA		
TH-232		NA			UNKN	1.000	pci/L	U	UNKN	1.000	pci/L	U
TH-TOTAL	*U	7.000	ug/L	D		NA				NA		
U-234	*U	1.000	pci/L	U		NA				NA		
U-234		NA			UNKN	1.000	pci/L	U	UNKN	1.000	pci/L	U
U-235/236	*U	1.000	pci/L	U		NA				NA		
U-235/236		NA			UNKN	1.000	pci/L	U	UNKN	1.000	pci/L	U
U-238	*U	1.000	pci/L	U		NA				NA		
U-238		NA			UNKN	1.000	pci/L	U	UNKN	1.000	pci/L	U
U-TOTAL	*U	0.100	ug/L	U		NA				NA		
U-TOTAL		NA			UNKN	1.000	ug/L	U	UNKN	1.000	ug/L	U

000844

TABLE D-11A
(Continued)

PHASE I - RADIOLOGICAL PARAMETERS

BORING NUMBER		4101				4101				4101		
SAMPLE NUMBER		003409				003410 DUPLICATE				003719		
SAMPLING DATE		08/08/88				08/08/88				11/18/88		
RADIOLOGICAL PARAMETERS	FLTD	RESULTS	UNITS	VQ	FLTD	RESULTS	UNITS	VQ	FLTD	RESULTS	UNITS	VQ
CS-137	*U	20.000	pci/L	R	*U	20.000	pci/L	R	*U	20.000	pci/L	R
NP-237	*U	1.000	pci/L	UJ	*U	1.000	pci/L	UJ	*U	1.000	pci/L	U
PU-238	*U	1.000	pci/L	U	*U	1.000	pci/L	U	*U	1.000	pci/L	U
PU-239/240	*U	1.000	pci/L	U	*U	1.000	pci/L	U	*U	1.000	pci/L	U
RA-226	*U	1.900	pci/L	R	*U	1.700	pci/L	R	*U	1.000	pci/L	U
RA-228	*U	3.000	pci/L	U	*U	3.000	pci/L	U	*U	3.000	pci/L	U
RU-106	*U	150.000	pci/L	R	*U	150.000	pci/L	R	*U	150.000	pci/L	R
SR-90	*U	5.000	pci/L	U	*U	5.000	pci/L	U	*U	5.000	pci/L	U
TC-99	*U	30.000	pci/L	UJ	*U	30.000	pci/L	UJ	*U	30.000	pci/L	U
TH-228	*U	1.000	pci/L	U	*U	1.000	pci/L	U	*U	1.000	pci/L	U
TH-230	*U	1.000	pci/L	U	*U	1.000	pci/L	U	*U	1.000	pci/L	U
TH-232	*U	1.000	pci/L	U	*U	1.000	pci/L	U	*U	1.000	pci/L	U
TH-TOTAL	*U	3.000	ug/L	U	*U	3.000	ug/L	U	*U	2.000	ug/L	U
U-234	*U	1.000	pci/L	U	*U	1.000	pci/L	U	*U	1.000	pci/L	U
U-235/236	*U	1.000	pci/L	U	*U	1.000	pci/L	U	*U	1.000	pci/L	U
U-238	*U	1.000	pci/L	U	*U	1.000	pci/L	U	*U	1.000	pci/L	U
U-TOTAL	*U	1.000	ug/L	U	*U	1.000	ug/L	U	*U	1.000	ug/L	U

TABLE D-11A
(Continued)

PHASE I - RADIOLOGICAL PARAMETERS

BORING NUMBER		4101				4102				4102		
SAMPLE NUMBER		066736				003919				003205		
SAMPLING DATE		12/07/89				02/23/89				05/19/88		
RADIOLOGICAL PARAMETERS	FLTD	RESULTS	UNITS	VQ	FLTD	RESULTS	UNITS	VQ	FLTD	RESULTS	UNITS	VQ
CS-137		NA			*U	20.000	pci/L	R		NA		
CS-137		NA				NA			UNKN	20.000	pci/L	R
NP-237		NA			*U	1.000	pci/L	U		NA		
NP-237		NA				NA			UNKN	1.000	pci/L	U
PU-238		NA			*U	1.000	pci/L	U		NA		
PU-238		NA				NA			UNKN	1.000	pci/L	U
PU-239/240		NA			*U	1.000	pci/L	U		NA		
PU-239/240		NA				NA			UNKN	1.000	pci/L	U
RA-226		NA			*U	1.000	pci/L	U		NA		
RA-226		NA				NA			UNKN	1.000	pci/L	U
RA-228		NA			*U	3.000	pci/L	UJ		NA		
RA-228		NA				NA			UNKN	3.000	pci/L	U
RU-106		NA			*U	150.000	pci/L	R		NA		
RU-106		NA				NA			UNKN	150.000	pci/L	R
SR-90		NA			*U	5.000	pci/L	U		NA		
SR-90		NA				NA			UNKN	5.000	pci/L	U
TC-99		NA			*U	30.000	pci/L	U		NA		
TC-99	UNKN	30.000	pci/L	R		NA			UNKN	30.000	pci/L	U
TH-228		NA			*U	1.000	pci/L	U		NA		
TH-228	UNKN	1.000	pci/L	R		NA			UNKN	1.000	pci/L	U
TH-230		NA			*U	1.000	pci/L	U		NA		
TH-230	UNKN	1.000	pci/L	R		NA			UNKN	1.000	pci/L	U
TH-232		NA			*U	1.000	pci/L	U		NA		
TH-232		NA				NA			UNKN	1.000	pci/L	U
TH-TOTAL		NA			*U	3.000	ug/L	U		NA		
U-234		NA			*U	1.600	pci/L	-		NA		
U-234	UNKN	1.000	pci/L	R		NA			UNKN	1.000	pci/L	U
U-235/236		NA			*U	1.000	pci/L	U		NA		
U-235/236	UNKN	1.000	pci/L	R		NA			UNKN	1.000	pci/L	U
U-238		NA			*U	1.000	pci/L	-		NA		
U-238	UNKN	1.000	pci/L	R		NA			UNKN	1.000	pci/L	U
U-TOTAL		NA			*U	1.000	ug/L	U		NA		
U-TOTAL	UNKN	1.000	ug/L	R		NA			UNKN	1.000	ug/L	U

000846

TABLE D-11A
(Continued)

PHASE I - RADIOLOGICAL PARAMETERS

BORING NUMBER		4102				4102				4102		
SAMPLE NUMBER		003206				003412				003413		
		DUPLICATE								DUPLICATE		
SAMPLING DATE		05/19/88				08/08/88				08/08/88		
RADIOLOGICAL PARAMETERS	FLTD	RESULTS	UNITS	VQ	FLTD	RESULTS	UNITS	VQ	FLTD	RESULTS	UNITS	VQ
CS-137	*U	20.000	pci/L	R		NA				NA		
CS-137		NA			UNKN	20.000	pci/L	R	UNKN	20.000	pci/L	R
NP-237	*U	1.000	pci/L	U		NA				NA		
NP-237		NA			UNKN	1.000	pci/L	UJ	UNKN	1.000	pci/L	UJ
PU-238	*U	1.000	pci/L	U		NA				NA		
PU-238		NA			UNKN	1.000	pci/L	U	UNKN	1.000	pci/L	U
PU-239/240	*U	1.000	pci/L	U		NA				NA		
PU-239/240		NA			UNKN	1.000	pci/L	U	UNKN	1.000	pci/L	U
RA-226	*U	1.000	pci/L	U		NA				NA		
RA-226		NA			UNKN	1.000	pci/L	R	UNKN	1.000	pci/L	R
RA-228	*U	3.000	pci/L	U		NA				NA		
RA-228		NA			UNKN	3.000	pci/L	U	UNKN	3.000	pci/L	U
RU-106	*U	150.000	pci/L	R		NA				NA		
RU-106		NA			UNKN	150.000	pci/L	R	UNKN	150.000	pci/L	R
SR-90	*U	5.000	pci/L	U		NA				NA		
SR-90		NA			UNKN	5.000	pci/L	U	UNKN	5.000	pci/L	U
TC-99	*U	30.000	pci/L	U		NA				NA		
TC-99		NA			UNKN	30.000	pci/L	UJ	UNKN	30.000	pci/L	UJ
TH-228	*U	1.000	pci/L	U		NA				NA		
TH-228		NA			UNKN	1.000	pci/L	U	UNKN	1.000	pci/L	U
TH-230	*U	1.000	pci/L	U		NA				NA		
TH-230		NA			UNKN	1.000	pci/L	U	UNKN	1.000	pci/L	U
TH-232	*U	1.000	pci/L	U		NA				NA		
TH-232		NA			UNKN	1.000	pci/L	U	UNKN	1.000	pci/L	U
TH-TOTAL		NA			UNKN	3.000	ug/L	U	UNKN	4.000	ug/L	U
U-234	*U	1.000	pci/L	U		NA				NA		
U-234		NA			UNKN	1.000	pci/L	U	UNKN	1.000	pci/L	U
U-235/236	*U	1.000	pci/L	U		NA				NA		
U-235/236		NA			UNKN	1.000	pci/L	U	UNKN	1.000	pci/L	U
U-238	*U	1.000	pci/L	U		NA				NA		
U-238		NA			UNKN	1.000	pci/L	U	UNKN	1.000	pci/L	U
U-TOTAL	*U	1.000	ug/L	U		NA				NA		
U-TOTAL		NA			UNKN	1.000	ug/L	U	UNKN	1.000	ug/L	U

000817

6508

TABLE D-11A
(Continued)

PHASE I - RADIOLOGICAL PARAMETERS

BORING NUMBER		4102				4102		
SAMPLE NUMBER		003720				066738		
SAMPLING DATE		11/18/88				12/07/89		
RADIOLOGICAL PARAMETERS	FLTD	RESULTS	UNITS	VQ	FLTD	RESULTS	UNITS	VQ
CS-137	UNKN	20.000	pci/L	R		NA		
NP-237	UNKN	1.000	pci/L	U		NA		
PU-238	UNKN	1.000	pci/L	U		NA		
PU-239/240	UNKN	1.000	pci/L	U		NA		
RA-226	UNKN	1.000	pci/L	U		NA		
RA-228	UNKN	3.000	pci/L	U		NA		
RU-106	UNKN	150.000	pci/L	R		NA		
SR-90	UNKN	5.000	pci/L	U		NA		
TC-99	UNKN	30.000	pci/L	U	UNKN	30.000	pci/L	R
TH-228	UNKN	1.000	pci/L	U	UNKN	1.000	pci/L	R
TH-230	UNKN	1.000	pci/L	U	UNKN	1.000	pci/L	R
TH-232	UNKN	1.000	pci/L	U		NA		
TH-TOTAL	UNKN	3.000	ug/L	U		NA		
U-234	UNKN	1.000	pci/L	U	UNKN	1.000	pci/L	R
U-235/236	UNKN	1.000	pci/L	U	UNKN	1.000	pci/L	R
U-238	UNKN	1.000	pci/L	U	UNKN	1.000	pci/L	R
U-TOTAL	UNKN	1.000	ug/L	U	UNKN	1.000	ug/L	R

TABLE D-11A
(Continued)

PHASE I - CHEMICAL PARAMETERS

BORING NUMBER	1039					1039					1039				
SAMPLE NUMBER	003179					003491					003733				
SAMPLING DATE	05/11/88					08/10/88					11/20/88				
CHEMICAL PARAMETERS	FLTD	RESULTS	UNITS	L	VQ	FLTD	RESULTS	UNITS	L	VQ	FLTD	RESULTS	UNITS	L	VQ
Inorganics															
Arsenic		NA				*F	0.010	mg/L	C	U		NA			
Arsenic	FILT	0.200	mg/L	C	U		NA				FILT	0.002	mg/L	C	UJ
Barium		NA				*F	0.300	mg/L	C	-		NA			
Barium	FILT	0.459	mg/L	C	-		NA				FILT	0.254	mg/L	C	-
Cadmium		NA				*F	0.005	mg/L	C	U		NA			
Cadmium	FILT	0.005	mg/L	C	U		NA				FILT	0.002	mg/L	C	U
Calcium		NA				*F	240.000	mg/L	C	-		NA			
Calcium	FILT	274.000	mg/L	C	-		NA				FILT	186.000	mg/L	C	-
Chromium		NA				*F	0.010	mg/L	C	U		NA			
Chromium	FILT	0.020	mg/L	C	U		NA				FILT	0.020	mg/L	C	U
Copper		NA				*F	0.030	mg/L	C	U		NA			
Copper	FILT	0.016	mg/L	C	-		NA				FILT	0.010	mg/L	C	U
Iron		NA				*F	1.800	mg/L	C	-		NA			
Iron	FILT	0.560	mg/L	C	-		NA				FILT	0.122	mg/L	C	-
Lead		NA				*F	0.005	mg/L	C	U		NA			
Lead	FILT	0.050	mg/L	C	U		NA				FILT	0.003	mg/L	C	J
Magnesium		NA				*F	100.000	mg/L	C	-		NA			
Magnesium	FILT	109.600	mg/L	C	-		NA				FILT	71.200	mg/L	C	-
Manganese		NA				*F	0.790	mg/L	C	-		NA			
Manganese	FILT	0.986	mg/L	C	-		NA				FILT	0.643	mg/L	C	-
Mercury		NA				*F	0.000	mg/L	C	U		NA			
Mercury	FILT	0.000	mg/L	C	UJ		NA				FILT	0.000	mg/L	C	U
Molybdenum		NA				*F	0.050	mg/L	C	U		NA			
Molybdenum	FILT	0.020	mg/L	C	U		NA				FILT	0.020	mg/L	C	U
Nickel		NA				*F	0.040	mg/L	C	U		NA			
Nickel	FILT	0.020	mg/L	C	U		NA				FILT	0.020	mg/L	C	U
Potassium		NA				*F	5.000	mg/L	C	U		NA			
Potassium	FILT	1.330	mg/L	C	-		NA				FILT	0.671	mg/L	C	-
Selenium		NA				*F	0.005	mg/L	C	U		NA			
Selenium	FILT	0.200	mg/L	C	U		NA				FILT	0.002	mg/L	C	UJ
Silver		NA				*F	0.010	mg/L	C	U		NA			
Silver	FILT	0.010	mg/L	C	U		NA				FILT	0.001	mg/L	C	U
Sodium		NA				*F	350.000	mg/L	C	-		NA			
Sodium	FILT	243.900	mg/L	C	-		NA				FILT	245.000	mg/L	C	-
General Chemistry															
Ammonia	UNFI	0.100	mg/L	C	UJ	UNFI	0.300	mg/L	C	-	UNFI	0.100	mg/L	C	UJ
Chloride		NA				U	860.000	mg/L	C	-		NA			
Chloride	UNFI	1095.000	mg/L	C	-		NA				UNFI	750.000	mg/L	C	J
Fluoride	UNFI	0.460	mg/L	C	J	UNFI	3.500	mg/L	C	-	UNFI	0.350	mg/L	C	-
Nitrate	UNFI	0.100	mg/L	C	R	UNFI	0.130	mg/L	C	J	UNFI	0.100	mg/L	C	UJ

000849
6508

TABLE D-11A
(Continued)

PHASE I - CHEMICAL PARAMETERS

BORING NUMBER	1039					1039					1039				
SAMPLE NUMBER	003179					003491					003733				
SAMPLING DATE	05/11/88					08/10/88					11/20/88				
CHEMICAL PARAMETERS	FLTD	RESULTS	UNITS	L	VQ	FLTD	RESULTS	UNITS	L	VQ	FLTD	RESULTS	UNITS	L	VQ
General Chemistry															
Phenols	UNFI	0.020	mg/L	C	J	UNFI	0.050	mg/L	C	U	UNFI	0.010	mg/L	C	UJ
Phosphorus	UNFI	0.050	mg/L	C	UJ		NA				UNFI	0.028	mg/L	C	J
Sulfate	UNFI	119.000	mg/L	C	J	UNFI	130.000	mg/L	C	-	UNFI	144.000	mg/L	C	J
Total Kjeldahl Nitrogen		NA				UNFI	21.000	mg/L	C	-	UNFI	0.300	mg/L	C	J
Total Organic Halides		NA					NA				UNFI	0.050	mg/L	C	U
Total Organic Nitrogen	UNFI	0.100	mg/L	C	UJ		NA				UNFI	0.300	mg/L	C	J

000850

TABLE D-11A
(Continued)

PHASE I - CHEMICAL PARAMETERS

BORING NUMBER	1039					1041					1041				
SAMPLE NUMBER	003928					003180					003490				
SAMPLING DATE	02/05/89					05/11/88					08/10/88				
CHEMICAL PARAMETERS	FLTD	RESULTS	UNITS	L	VQ	FLTD	RESULTS	UNITS	L	VQ	FLTD	RESULTS	UNITS	L	VQ
Inorganics															
Arsenic		NA					NA				*F	0.010	mg/L	C	U
Arsenic	FILT	0.002	mg/L	C	U	FILT	0.200	mg/L	C	U		NA			
Barium		NA					NA				*F	0.200	mg/L	C	-
Barium	FILT	0.191	mg/L	C	-	FILT	0.113	mg/L	C	-		NA			
Cadmium		NA					NA				*F	0.005	mg/L	C	U
Cadmium	FILT	0.010	mg/L	C	-	FILT	0.005	mg/L	C	U		NA			
Calcium		NA					NA				*F	150.000	mg/L	C	-
Calcium	FILT	168.000	mg/L	C	-	FILT	172.000	mg/L	C	-		NA			
Chromium		NA					NA				*F	0.010	mg/L	C	U
Chromium	FILT	0.035	mg/L	C	-	FILT	0.020	mg/L	C	U		NA			
Copper		NA					NA				*F	0.030	mg/L	C	U
Copper	FILT	0.016	mg/L	C	-	FILT	0.017	mg/L	C	-		NA			
Iron		NA					NA				*F	0.100	mg/L	C	U
Iron	FILT	0.097	mg/L	C	-	FILT	0.210	mg/L	C	-		NA			
Lead		NA					NA				*F	0.005	mg/L	C	U
Lead	FILT	0.002	mg/L	C	UJ	FILT	0.050	mg/L	C	U		NA			
Magnesium		NA					NA				*F	61.000	mg/L	C	-
Magnesium	FILT	70.000	mg/L	C	-	FILT	70.500	mg/L	C	-		NA			
Manganese		NA					NA				*F	0.360	mg/L	C	-
Manganese	FILT	0.481	mg/L	C	-	FILT	0.614	mg/L	C	-		NA			
Mercury		NA					NA				*F	0.000	mg/L	C	U
Mercury	FILT	0.000	mg/L	C	-	FILT	0.000	mg/L	C	UJ		NA			
Molybdenum		NA					NA				*F	0.050	mg/L	C	U
Molybdenum	FILT	0.020	mg/L	C	U	FILT	0.020	mg/L	C	U		NA			
Nickel		NA					NA				*F	0.040	mg/L	C	U
Nickel	FILT	0.023	mg/L	C	-	FILT	0.020	mg/L	C	U		NA			
Potassium		NA					NA				*F	5.000	mg/L	C	U
Potassium	FILT	0.792	mg/L	C	J	FILT	0.480	mg/L	C	-		NA			
Selenium		NA					NA				*F	0.005	mg/L	C	U
Selenium	FILT	0.002	mg/L	C	UJ	FILT	0.020	mg/L	C	U		NA			
Silver		NA					NA				*F	0.010	mg/L	C	U
Silver	FILT	0.001	mg/L	C	U	FILT	0.060	mg/L	C	U		NA			
Sodium		NA					NA				*F	26.000	mg/L	C	-
Sodium	FILT	218.000	mg/L	C	-	FILT	28.800	mg/L	C	-		NA			
General Chemistry															
Ammonia		NA					NA				U	0.300	mg/L	C	U
Ammonia	UNFI	0.100	mg/L	C	U	UNFI	0.100	mg/L	C	UJ		NA			
Chloride		NA					NA				U	170.000	mg/L	C	-
Chloride	UNFI	700.000	mg/L	C	-	UNFI	495.000	mg/L	C	-		NA			
Fluoride	UNFI	0.160	mg/L	C	J	UNFI	0.410	mg/L	C	J	UNFI	1.800	mg/L	C	-

000851

6508

TABLE D-11A
(Continued)

PHASE I - CHEMICAL PARAMETERS

BORING NUMBER		1039					1041					1041			
SAMPLE NUMBER		003928					003180					003490			
SAMPLING DATE		02/05/89					05/11/88					08/10/88			
CHEMICAL PARAMETERS	FLTD	RESULTS	UNITS	L	VQ	FLTD	RESULTS	UNITS	L	VQ	FLTD	RESULTS	UNITS	L	VQ
General Chemistry															
Nitrate	UNFI	0.100	mg/L	C	UJ	UNFI	0.100	mg/L	C	R	UNFI	0.120	mg/L	C	J
Phenols	UNFI	0.011	mg/L	C	J	UNFI	0.020	mg/L	C	J	UNFI	0.050	mg/L	C	U
Phosphorus	UNFI	0.050	mg/L	C	J	UNFI	0.270	mg/L	C	J		NA			
Sulfate	UNFI	131.000	mg/L	C	-	UNFI	113.000	mg/L	C	J	UNFI	56.000	mg/L	C	-
Total Kjeldahl Nitrogen	UNFI	0.103	mg/L	C	J		NA				UNFI	15.000	mg/L	C	U
Total Organic Halides	UNFI	0.050	mg/L	C	U		NA					NA			
Total Organic Nitrogen	UNFI	0.103	mg/L	C	J	UNFI	0.100	mg/L	C	UJ		NA			

008852

TABLE D-11A
(Continued)

PHASE I - CHEMICAL PARAMETERS

BORING NUMBER	1041					1041					1042				
SAMPLE NUMBER	003732					003924					003182				
SAMPLING DATE	11/17/88					03/01/89					05/11/88				
CHEMICAL PARAMETERS	FLTD	RESULTS	UNITS	L	VQ	FLTD	RESULTS	UNITS	L	VQ	FLTD	RESULTS	UNITS	L	VQ
Inorganics															
Arsenic	FILT	0.002	mg/L	C	U	FILT	0.003	mg/L	C	U	FILT	0.200	mg/L	C	U
Barium	FILT	0.180	mg/L	C	-	FILT	0.140	mg/L	C	-	FILT	0.284	mg/L	C	-
Cadmium	FILT	0.002	mg/L	C	U	FILT	0.007	mg/L	C	-	FILT	0.005	mg/L	C	U
Calcium	FILT	196.000	mg/L	C	-	FILT	180.000	mg/L	C	-	FILT	92.900	mg/L	C	-
Chromium	FILT	0.020	mg/L	C	U	FILT	0.030	mg/L	C	-	FILT	0.020	mg/L	C	U
Copper	FILT	0.010	mg/L	C	U	FILT	0.010	mg/L	C	U	FILT	0.010	mg/L	C	U
Iron	FILT	0.572	mg/L	C	-	FILT	0.040	mg/L	C	-	FILT	1.600	mg/L	C	-
Lead	FILT	0.002	mg/L	C	J	FILT	0.002	mg/L	C	U	FILT	0.050	mg/L	C	U
Magnesium	FILT	72.200	mg/L	C	-	FILT	70.000	mg/L	C	-	FILT	30.100	mg/L	C	-
Manganese	FILT	0.670	mg/L	C	-	FILT	0.610	mg/L	C	-	FILT	0.205	mg/L	C	-
Mercury	FILT	0.000	mg/L	C	U	FILT	0.000	mg/L	C	UJ	FILT	0.000	mg/L	C	UJ
Molybdenum	FILT	0.030	mg/L	C	-	FILT	0.020	mg/L	C	-	FILT	0.023	mg/L	C	U
Nickel	FILT	0.026	mg/L	C	-	FILT	0.030	mg/L	C	U	FILT	0.020	mg/L	C	U
Potassium	FILT	0.490	mg/L	C	-	FILT	0.500	mg/L	C	-	FILT	0.910	mg/L	C	-
Selenium	FILT	0.002	mg/L	C	UJ	FILT	0.005	mg/L	C	U	FILT	0.200	mg/L	C	U
Silver	FILT	0.001	mg/L	C	U	FILT	0.010	mg/L	C	U	FILT	0.010	mg/L	C	U
Sodium	FILT	32.900	mg/L	C	-	FILT	41.000	mg/L	C	-	FILT	25.600	mg/L	C	-
General Chemistry															
Ammonia	UNFI	0.120	mg/L	C	J	UNFI	0.200	mg/L	C	-	UNFI	0.500	mg/L	C	J
Chloride	UNFI	259.000	mg/L	C	J	UNFI	230.000	mg/L	C	-	UNFI	59.800	mg/L	C	-
Fluoride	UNFI	0.500	mg/L	C	-	UNFI	0.300	mg/L	C	-	UNFI	0.560	mg/L	C	J
Nitrate	UNFI	0.100	mg/L	C	R	UNFI	0.020	mg/L	C	R	UNFI	0.100	mg/L	C	R
Phenols	UNFI	0.014	mg/L	C	J	UNFI	0.005	mg/L	C	U	UNFI	0.020	mg/L	C	J
Phosphorus	UNFI	0.536	mg/L	C	J	UNFI	0.020	mg/L	C	-	UNFI	0.190	mg/L	C	J
Sulfate	UNFI	116.000	mg/L	C	J	UNFI	76.000	mg/L	C	-	UNFI	75.000	mg/L	C	J
Total Kjeldahl Nitrogen	UNFI	0.820	mg/L	C	J	UNFI	0.500	mg/L	C	U		NA			
Total Organic Halides	UNFI	0.050	mg/L	C	U		NA					NA			
Total Organic Nitrogen	UNFI	0.700	mg/L	C	-	UNFI	0.300	mg/L	C	U	UNFI	0.100	mg/L	C	UJ

000853

6508

TABLE D-11A
(Continued)

PHASE I - CHEMICAL PARAMETERS

BORING NUMBER		1042					1042					1042			
SAMPLE NUMBER		003416					003723					003922			
SAMPLING DATE		08/09/88					11/17/88					03/01/89			
CHEMICAL PARAMETERS	FLTD	RESULTS	UNITS	L	VQ	FLTD	RESULTS	UNITS	L	VQ	FLTD	RESULTS	UNITS	L	VQ
Inorganics															
Aluminum	*F	0.200	mg/L	C	U		NA					NA			
Antimony	*F	0.060	mg/L	C	U		NA					NA			
Arsenic	*F	0.010	mg/L	C	U		NA					NA			
Arsenic		NA				FILT	0.002	mg/L	C	U	FILT	0.003	mg/L	C	U
Barium	*F	0.200	mg/L	C	U		NA					NA			
Barium		NA				FILT	0.248	mg/L	C	-	FILT	0.087	mg/L	C	-
Beryllium	*F	0.005	mg/L	C	U		NA					NA			
Cadmium	*F	0.005	mg/L	C	U		NA					NA			
Cadmium		NA				FILT	0.002	mg/L	C	U	FILT	0.005	mg/L	C	U
Calcium	*F	100.000	mg/L	C	-		NA					NA			
Calcium		NA				FILT	109.000	mg/L	C	-	FILT	120.000	mg/L	C	-
Chromium	*F	0.010	mg/L	C	U		NA					NA			
Chromium		NA				FILT	0.020	mg/L	C	U	FILT	0.020	mg/L	C	-
Cobalt	*F	0.050	mg/L	C	U		NA					NA			
Copper	*F	0.030	mg/L	C	U		NA					NA			
Copper		NA				FILT	0.010	mg/L	C	U	FILT	0.010	mg/L	C	U
Iron	*F	0.300	mg/L	C	-		NA					NA			
Iron		NA				FILT	0.567	mg/L	C	-	FILT	0.050	mg/L	C	-
Lead	*F	0.005	mg/L	C	U		NA					NA			
Lead		NA				FILT	0.004	mg/L	C	J	FILT	0.002	mg/L	C	U
Magnesium	*F	36.000	mg/L	C	-		NA					NA			
Magnesium		NA				FILT	37.400	mg/L	C	-	FILT	47.000	mg/L	C	-
Manganese	*F	0.120	mg/L	C	-		NA					NA			
Manganese		NA				FILT	0.104	mg/L	C	-	FILT	0.029	mg/L	C	-
Mercury	*F	0.000	mg/L	C	U		NA					NA			
Mercury		NA				FILT	0.000	mg/L	C	U	FILT	0.000	mg/L	C	UJ
Molybdenum	*F	0.050	mg/L	C	U		NA					NA			
Molybdenum		NA				FILT	0.022	mg/L	C	-	FILT	0.020	mg/L	C	-
Nickel	*F	0.040	mg/L	C	U		NA					NA			
Nickel		NA				FILT	0.020	mg/L	C	U	FILT	0.030	mg/L	C	U
Potassium	*F	5.000	mg/L	C	U		NA					NA			
Potassium		NA				FILT	0.720	mg/L	C	-	FILT	0.670	mg/L	C	-
Selenium	*F	0.005	mg/L	C	U		NA					NA			
Selenium		NA				FILT	0.002	mg/L	C	UJ	FILT	0.005	mg/L	C	U
Silver	*F	0.010	mg/L	C	U		NA					NA			
Silver		NA				FILT	0.001	mg/L	C	U	FILT	0.010	mg/L	C	U
Sodium	*F	26.000	mg/L	C	-		NA					NA			
Sodium		NA				FILT	23.800	mg/L	C	-	FILT	14.000	mg/L	C	-
Thallium	*F	0.500	mg/L	C	U		NA					NA			
Vanadium	*F	0.050	mg/L	C	U		NA					NA			
Zinc	*F	0.140	mg/L	C	-		NA					NA			
Semivolatile Organics															
Phenol	UNFI	50.000	ug/L	C	-		NA					NA			

000854

TABLE D-11A
(Continued)

PHASE I - CHEMICAL PARAMETERS

BORING NUMBER	1042					1042					1042				
SAMPLE NUMBER	003416					003723					003922				
SAMPLING DATE	08/09/88					11/17/88					03/01/89				
CHEMICAL PARAMETERS	FLTD	RESULTS	UNITS	L	VQ	FLTD	RESULTS	UNITS	L	VQ	FLTD	RESULTS	UNITS	L	VQ
General Chemistry															
Ammonia	UNFI	0.300	mg/L	C	U	UNFI	0.100	mg/L	C	UJ	UNFI	0.200	mg/L	C	-
Chloride	UNFI	64.000	mg/L	C	-	UNFI	57.500	mg/L	C	J	UNFI	37.000	mg/L	C	U
Fluoride	UNFI	1.400	mg/L	C	-	UNFI	0.480	mg/L	C	-	UNFI	0.200	mg/L	C	-
Nitrate	UNFI	0.240	mg/L	C	J	UNFI	0.100	mg/L	C	R	UNFI	0.490	mg/L	C	J
Phenols		NA				UNFI	0.014	mg/L	C	J	UNFI	0.025	mg/L	C	-
Phenols	UNKN	0.050	mg/L	C	U		NA					NA			
Phosphorus		NA				UNFI	0.872	mg/L	C	J	UNFI	0.100	mg/L	C	-
Sulfate		NA				UNFI	246.000	mg/L	C	J	UNFI	100.000	mg/L	C	-
Sulfate	UNKN	80.000	mg/L	C	J		NA					NA			
Total Kjeldahl Nitrogen	UNFI	15.000	mg/L	C	U	UNFI	0.510	mg/L	C	J	UNFI	0.300	mg/L	C	U
Total Organic Halides		NA				UNFI	0.050	mg/L	C	U		NA			
Total Organic Nitrogen	UNFI	0.300	mg/L	C	U	UNFI	0.510	mg/L	C	-	UNFI	0.100	mg/L	C	U

TABLE D-11A
(Continued)

PHASE I - CHEMICAL PARAMETERS

BORING NUMBER		1134				1134				1210			
SAMPLE NUMBER		045427				045428				045738			
SAMPLING DATE		10/18/89				01/31/90				10/22/89			
CHEMICAL PARAMETERS	FLTD	RESULTS	UNITS	L	VQ	FLTD	RESULTS	UNITS	L	VQ	FLTD	RESULTS	UNITS	L	VQ
General Chemistry															
Nitrate	UNFI	0.100	mg/L	C	U		NA				UNFI	0.100	mg/L	C	U
Nitrate		NA				UNKN	0.100	mg/L	C	U		NA			

000856

TABLE D-11A
(Continued)

PHASE I - CHEMICAL PARAMETERS

BORING NUMBER		1210				1229				1229			
SAMPLE NUMBER		045740				045781				045782			
SAMPLING DATE		07/02/90				10/23/89				06/30/90			
CHEMICAL PARAMETERS	FLTD	RESULTS	UNITS	L	VQ	FLTD	RESULTS	UNITS	L	VQ	FLTD	RESULTS	UNITS	L	VQ
General Chemistry															
Nitrate	UNFI	0.100	mg/L	C	UJ	UNFI	0.100	mg/L	C	U	UNFI	0.100	mg/L	C	UJ

000857

TABLE D-11A
(Continued)

PHASE I - CHEMICAL PARAMETERS

BORING NUMBER		2042					2042					2042			
SAMPLE NUMBER		003150					003415					003722			
SAMPLING DATE		05/04/88					08/09/88					11/17/88			
CHEMICAL PARAMETERS	FLTD	RESULTS	UNITS	L	VQ	FLTD	RESULTS	UNITS	L	VQ	FLTD	RESULTS	UNITS	L	VQ
Inorganics															
Aluminum	FILT	0.070	mg/L	D	U	FILT	0.200	mg/L	C	U		NA			
Antimony	FILT	0.001	mg/L	D	U	FILT	0.060	mg/L	C	-		NA			
Arsenic	FILT	0.002	mg/L	D	U	FILT	0.010	mg/L	C	U	FILT	0.002	mg/L	C	U
Barium	FILT	0.038	mg/L	D	-	FILT	0.200	mg/L	C	U	FILT	0.043	mg/L	C	-
Beryllium	FILT	0.001	mg/L	D	U	FILT	0.005	mg/L	C	U		NA			
Cadmium	FILT	0.002	mg/L	D	U	FILT	0.005	mg/L	C	U	FILT	0.002	mg/L	C	U
Calcium	FILT	79.800	mg/L	D	J	FILT	100.000	mg/L	C	-	FILT	106.000	mg/L	C	-
Chromium	FILT	0.020	mg/L	D	U	FILT	0.010	mg/L	C	U	FILT	0.020	mg/L	C	U
Cobalt	FILT	0.010	mg/L	D	U	FILT	0.050	mg/L	C	U		NA			
Copper	FILT	0.010	mg/L	D	UJ	FILT	0.030	mg/L	C	U	FILT	0.010	mg/L	C	U
Cyanide	UNKN	0.010	mg/L	D	UJ		NA					NA			
Iron	FILT	0.186	mg/L	D	J	FILT	0.200	mg/L	C	-	FILT	0.321	mg/L	C	-
Lead	FILT	0.002	mg/L	D	UJ	FILT	0.005	mg/L	C	U	FILT	0.002	mg/L	C	UJ
Magnesium	FILT	21.910	mg/L	D	J	FILT	25.000	mg/L	C	-	FILT	25.500	mg/L	C	-
Manganese	FILT	0.233	mg/L	D	-	FILT	0.110	mg/L	C	-	FILT	0.113	mg/L	C	-
Mercury	FILT	0.000	mg/L	D	U	FILT	0.000	mg/L	C	U	FILT	0.000	mg/L	C	U
Molybdenum	FILT	0.020	mg/L	D	UJ	FILT	0.050	mg/L	C	U	FILT	0.022	mg/L	C	-
Nickel	FILT	0.020	mg/L	D	U	FILT	0.040	mg/L	C	U	FILT	0.020	mg/L	C	U
Potassium	FILT	2.840	mg/L	D	UJ	FILT	5.000	mg/L	C	U	FILT	2.370	mg/L	C	-
Selenium	FILT	0.002	mg/L	D	UJ	FILT	0.005	mg/L	C	U	FILT	0.002	mg/L	C	UJ
Silver	FILT	0.001	mg/L	D	R	FILT	0.010	mg/L	C	U	FILT	0.001	mg/L	C	U
Sodium	FILT	10.910	mg/L	D	J	FILT	12.000	mg/L	C	-	FILT	11.500	mg/L	C	-
Thallium	FILT	0.001	mg/L	D	UJ	FILT	0.500	mg/L	C	U		NA			
Vanadium	FILT	0.013	mg/L	D	UJ	FILT	0.050	mg/L	C	U		NA			
Zinc	FILT	0.013	mg/L	D	UJ	FILT	0.050	mg/L	C	-		NA			
Volatile Organics															
1,1,1-Trichloroethane	UNFI	5.000	ug/L	D	U		NA					NA			
1,1,2,2-Tetrachloroethane	UNKN	5.000	ug/L	D	U		NA					NA			
1,1,2-Trichloroethane	UNFI	5.000	ug/L	D	U		NA					NA			
1,1-Dichloroethane	UNFI	5.000	ug/L	D	U		NA					NA			
1,1-Dichloroethene	UNFI	5.000	ug/L	D	U		NA					NA			
1,2-Dichloroethane	U	5.000	ug/L	D	U		NA					NA			
1,2-Dichloroethene	UNFI	5.000	ug/L	D	U		NA					NA			
1,2-Dichloropropane	UNFI	5.000	ug/L	D	U		NA					NA			
2-Butanone	UNFI	10.000	ug/L	D	UJ		NA					NA			
2-Hexanone	UNFI	10.000	ug/L	D	UJ		NA					NA			
4-Methyl-2-pentanone	UNKN	10.000	ug/L	D	UJ		NA					NA			
Acetone	UNFI	7.000	ug/L	D	J		NA					NA			
Benzene	UNFI	5.000	ug/L	D	UJ		NA					NA			
Bromodichloromethane	UNFI	5.000	ug/L	D	U		NA					NA			

000858

TABLE D-11A
(Continued)

PHASE I - CHEMICAL PARAMETERS

BORING NUMBER		2042					2042					2042			
SAMPLE NUMBER		003150					003415					003722			
SAMPLING DATE		05/04/88					08/09/88					11/17/88			
CHEMICAL PARAMETERS	FLTD	RESULTS	UNITS	L	VQ	FLTD	RESULTS	UNITS	L	VQ	FLTD	RESULTS	UNITS	L	VQ
Volatile Organics															
Bromoform	UNFI	5.000	ug/L	D	U		NA					NA			
Bromomethane	UNFI	10.000	ug/L	D	UJ		NA					NA			
Carbon Tetrachloride	UNFI	5.000	ug/L	D	U		NA					NA			
Carbon disulfide	UNFI	5.000	ug/L	D	U		NA					NA			
Chlorobenzene	UNFI	5.000	ug/L	D	UJ		NA					NA			
Chloroethane	UNFI	10.000	ug/L	D	U		NA					NA			
Chloroform	UNKN	5.000	ug/L	D	U		NA					NA			
Chloromethane	UNFI	10.000	ug/L	D	U		NA					NA			
Dibromochloromethane	UNFI	5.000	ug/L	D	U		NA					NA			
Ethylbenzene	UNFI	5.000	ug/L	D	UJ		NA					NA			
Methylene chloride	UNFI	9.000	ug/L	D	UJ		NA					NA			
Styrene	UNFI	5.000	ug/L	D	UJ		NA					NA			
Tetrachloroethene	UNKN	5.000	ug/L	D	U		NA					NA			
Toluene	UNFI	5.000	ug/L	D	UJ		NA					NA			
Trichloroethene	UNFI	5.000	ug/L	D	U		NA					NA			
Vinyl Acetate	UNKN	10.000	ug/L	D	U		NA					NA			
Vinyl chloride	UNFI	10.000	ug/L	D	U		NA					NA			
Xylenes, Total	UNFI	5.000	ug/L	D	UJ		NA					NA			
cis-1,3-Dichloropropene	U	5.000	ug/L	D	U		NA					NA			
trans-1,3-Dichloropropene	UNFI	5.000	ug/L	D	U		NA					NA			
Semivolatile Organics															
1,2,4-Trichlorobenzene	UNFI	10.000	ug/L	D	U		NA					NA			
1,2-Dichlorobenzene	UNFI	10.000	ug/L	D	U		NA					NA			
1,3-Dichlorobenzene	UNFI	10.000	ug/L	D	U		NA					NA			
1,4-Dichlorobenzene	UNFI	10.000	ug/L	D	U		NA					NA			
2,4,5-Trichlorophenol	UNKN	50.000	ug/L	D	U		NA					NA			
2,4,6-Trichlorophenol	UNFI	10.000	ug/L	D	U		NA					NA			
2,4-Dichlorophenol	UNFI	10.000	ug/L	D	U		NA					NA			
2,4-Dimethylphenol	UNFI	10.000	ug/L	D	U		NA					NA			
2,4-Dinitrophenol	UNFI	50.000	ug/L	D	UJ		NA					NA			
2,4-Dinitrotoluene	UNKN	10.000	ug/L	D	U		NA					NA			
2,6-Dinitrotoluene	UNFI	10.000	ug/L	D	U		NA					NA			
2-Chloronaphthalene	UNFI	10.000	ug/L	D	U		NA					NA			
2-Chlorophenol	UNKN	10.000	ug/L	D	U		NA					NA			
2-Methylnaphthalene	UNFI	10.000	ug/L	D	U		NA					NA			
2-Methylphenol	UNFI	10.000	ug/L	D	U		NA					NA			
2-Nitroaniline	UNFI	50.000	ug/L	D	U		NA					NA			
2-Nitrophenol	UNFI	10.000	ug/L	D	U		NA					NA			
3,3'-Dichlorobenzidine	UNFI	20.000	ug/L	D	UJ		NA					NA			
3-Nitroaniline	UNFI	50.000	ug/L	D	UJ		NA					NA			

TABLE D-11A
(Continued)

PHASE I - CHEMICAL PARAMETERS

BORING NUMBER		2042				2042				2042			
SAMPLE NUMBER		003150				003415				003722			
SAMPLING DATE		05/04/88				08/09/88				11/17/88			
CHEMICAL PARAMETERS	FLTD	RESULTS	UNITS	L	VQ	FLTD	RESULTS	UNITS	L	VQ	FLTD	RESULTS	UNITS	L	VQ
Semivolatile Organics															
4,6-Dinitro-2-methylphenol	UNKN	50.000	ug/L	D	UJ		NA					NA			
4-Bromophenyl phenyl ether	UNFI	10.000	ug/L	D	U		NA					NA			
4-Chloro-3-methylphenol	UNFI	10.000	ug/L	D	U		NA					NA			
4-Chlorophenylphenyl ether	UNFI	10.000	ug/L	D	U		NA					NA			
4-Methylphenol	UNFI	10.000	ug/L	D	U		NA					NA			
4-Nitroaniline	UNFI	50.000	ug/L	D	UJ		NA					NA			
4-Nitrophenol	UNFI	50.000	ug/L	D	U		NA					NA			
Acenaphthene	UNFI	10.000	ug/L	D	U		NA					NA			
Acenaphthylene	UNFI	10.000	ug/L	D	U		NA					NA			
Anthracene	UNFI	10.000	ug/L	D	UJ		NA					NA			
Benzo(a)anthracene	UNFI	10.000	ug/L	D	U		NA					NA			
Benzo(a)pyrene	UNFI	10.000	ug/L	D	U		NA					NA			
Benzo(b)fluoranthene	UNFI	10.000	ug/L	D	U		NA					NA			
Benzo(g,h,i)perylene	UNKN	10.000	ug/L	D	U		NA					NA			
Benzo(k)fluoranthene	UNFI	10.000	ug/L	D	U		NA					NA			
Benzoic acid	UNFI	50.000	ug/L	D	UJ		NA					NA			
Benzyl alcohol	UNFI	10.000	ug/L	D	U		NA					NA			
Butyl benzyl phthalate	UNFI	10.000	ug/L	D	U		NA					NA			
Chrysene	UNFI	10.000	ug/L	D	U		NA					NA			
Di-n-butyl phthalate	UNFI	10.000	ug/L	D	R		NA					NA			
Di-n-octyl phthalate	UNFI	10.000	ug/L	D	U		NA					NA			
Dibenzo(a,h)anthracene	UNFI	10.000	ug/L	D	U		NA					NA			
Dibenzofuran	UNFI	10.000	ug/L	D	U		NA					NA			
Diethyl phthalate	UNFI	10.000	ug/L	D	U		NA					NA			
Dimethyl phthalate	UNFI	10.000	ug/L	D	U		NA					NA			
Fluoranthene	UNFI	10.000	ug/L	D	U		NA					NA			
Fluorene	UNFI	10.000	ug/L	D	U		NA					NA			
Hexachlorobenzene	UNFI	10.000	ug/L	D	U		NA					NA			
Hexachlorobutadiene	UNFI	10.000	ug/L	D	U		NA					NA			
Hexachlorocyclopentadiene	UNFI	10.000	ug/L	D	U		NA					NA			
Hexachloroethane	UNFI	10.000	ug/L	D	U		NA					NA			
Indeno(1,2,3-cd)pyrene	UNFI	10.000	ug/L	D	U		NA					NA			
Isophorone	UNFI	10.000	ug/L	D	U		NA					NA			
Methyl parathion	UNFI	1000.000	ug/L	C	U		NA					NA			
N-Nitroso-di-n-propylamine	UNFI	10.000	ug/L	D	U		NA					NA			
N-Nitrosodiphenylamine	UNFI	10.000	ug/L	D	U		NA					NA			
Naphthalene	UNFI	10.000	ug/L	D	U		NA					NA			
Nitrobenzene	UNFI	10.000	ug/L	D	U		NA					NA			
Parathion	UNFI	500.000	ug/L	C	U		NA					NA			
Pentachlorophenol	UNFI	50.000	ug/L	D	U		NA					NA			
Phenanthrene	UNFI	10.000	ug/L	D	UJ		NA					NA			
Phenol		NA				UNFI	50.000	ug/L	C	-		NA			

008860

TABLE D-11A
(Continued)

PHASE I - CHEMICAL PARAMETERS

BORING NUMBER		2042					2042					2042			
SAMPLE NUMBER		003150					003415					003722			
SAMPLING DATE		05/04/88					08/09/88					11/17/88			
CHEMICAL PARAMETERS	FLTD	RESULTS	UNITS	L	VQ	FLTD	RESULTS	UNITS	L	VQ	FLTD	RESULTS	UNITS	L	VQ
Semivolatile Organics															
Phenol	UNKN	10.000	ug/L	D	U		NA					NA			
Pyrene	UNFI	10.000	ug/L	D	U		NA					NA			
bis(2-Chloroethoxy)methane	UNFI	10.000	ug/L	D	U		NA					NA			
bis(2-Chloroethyl)ether	UNFI	10.000	ug/L	D	U		NA					NA			
bis(2-Chloroisopropyl) ether	UNFI	10.000	ug/L	D	U		NA					NA			
bis(2-Ethylhexyl) phthalate	UNFI	10.000	ug/L	D	U		NA					NA			
p-Chloroaniline	UNFI	10.000	ug/L	D	UJ		NA					NA			
Pesticide Organics/PCBs															
4,4'-DDD	U	0.100	ug/L	C	U		NA					NA			
4,4'-DDE	U	0.100	ug/L	C	U		NA					NA			
4,4'-DDT	U	0.100	ug/L	C	U		NA					NA			
Aldrin	U	0.050	ug/L	C	U		NA					NA			
Aroclor-1016	U	0.500	ug/L	C	U		NA					NA			
Aroclor-1221	U	0.500	ug/L	C	U		NA					NA			
Aroclor-1232	U	0.500	ug/L	C	U		NA					NA			
Aroclor-1242	U	0.500	ug/L	C	U		NA					NA			
Aroclor-1248	U	0.500	ug/L	C	U		NA					NA			
Aroclor-1254	U	1.000	ug/L	C	U		NA					NA			
Aroclor-1260	U	1.000	ug/L	C	U		NA					NA			
Azinphosmethyl	UNFI	2000.000	ug/L	C	U		NA					NA			
Demeton	UNFI	1000.000	ug/L	C	U		NA					NA			
Diazinon	UNFI	500.000	ug/L	C	U		NA					NA			
Dieldrin	U	0.100	ug/L	C	U		NA					NA			
Disulfoton	UNKN	500.000	ug/L	C	U		NA					NA			
Endosulfan II	U	0.100	ug/L	C	U		NA					NA			
Endosulfan sulfate	U	0.100	ug/L	C	U		NA					NA			
Endosulfan-I	U	0.050	ug/L	C	U		NA					NA			
Endrin	UNKN	0.100	ug/L	C	U		NA					NA			
Endrin ketone	U	0.100	ug/L	C	U		NA					NA			
Ethion	UNFI	500.000	ug/L	C	U		NA					NA			
Heptachlor	U	0.050	ug/L	C	U		NA					NA			
Heptachlor epoxide	U	0.050	ug/L	C	U		NA					NA			
Malathion	UNFI	1000.000	ug/L	C	U		NA					NA			
Methoxychlor	U	0.500	ug/L	C	U		NA					NA			
Toxaphene	U	1.000	ug/L	C	U		NA					NA			
alpha-BHC	U	0.050	ug/L	C	U		NA					NA			
alpha-Chlordane	U	0.500	ug/L	C	U		NA					NA			
beta-BHC	U	0.050	ug/L	C	U		NA					NA			
delta-BHC	U	0.050	ug/L	C	U		NA					NA			
gamma-BHC (Lindane)	U	0.050	ug/L	C	U		NA					NA			

TABLE D-11A
(Continued)

PHASE I - CHEMICAL PARAMETERS

BORING NUMBER		2042					2042					2042			
SAMPLE NUMBER		003150					003415					003722			
SAMPLING DATE		05/04/88					08/09/88					11/17/88			
CHEMICAL PARAMETERS	FLTD	RESULTS	UNITS	L	VQ	FLTD	RESULTS	UNITS	L	VQ	FLTD	RESULTS	UNITS	L	VQ
Pesticide Organics/PCBs															
gamma-Chlordane	U	0.500	ug/L	C	U		NA					NA			
General Chemistry															
Ammonia	UNFI	0.500	mg/L	C	U	UNFI	0.300	mg/L	C	U	UNFI	0.100	mg/L	C	UJ
Chloride	UNFI	36.700	mg/L	C	J	UNFI	18.000	mg/L	C	-	UNFI	19.500	mg/L	C	J
Fluoride	UNFI	0.390	mg/L	C	J	UNFI	1.200	mg/L	C	-	UNFI	0.140	mg/L	C	-
Nitrate	UNFI	0.200	mg/L	C	-	UNFI	0.900	mg/L	C	J	UNFI	0.436	mg/L	C	UJ
Phenols	UNFI	0.010	mg/L	C	UJ	UNFI	0.050	mg/L	C	U	UNFI	0.010	mg/L	C	UJ
Phosphorus	UNFI	0.056	mg/L	C	-		NA				UNFI	0.020	mg/L	C	UJ
Sulfate	UNFI	0.042	mg/L	C	-	UNFI	86.000	mg/L	C	J	UNFI	103.000	mg/L	C	J
Total Kjeldahl Nitrogen		NA				UNFI	15.000	mg/L	C	U	UNFI	0.260	mg/L	C	UJ
Total Organic Halides		NA					NA				UNFI	0.050	mg/L	C	U
Total Organic Nitrogen	UNFI	0.500	mg/L	C	U	UNFI	0.300	mg/L	C	U	UNFI	0.260	mg/L	C	-

000862

TABLE D-11A
(Continued)

PHASE I - CHEMICAL PARAMETERS

BORING NUMBER		2042				2042				4101			
SAMPLE NUMBER		003921				004036 DUPLICATE				003031			
SAMPLING DATE		03/01/89				03/01/89				12/04/87			
CHEMICAL PARAMETERS	FLTD	RESULTS	UNITS	L	VQ	FLTD	RESULTS	UNITS	L	VQ	FLTD	RESULTS	UNITS	L	VQ
Inorganics															
Arsenic	FILT	0.003	mg/L	C	U	FILT	0.003	mg/L	C	U		NA			
Arsenic		NA					NA				UNKN	0.002	mg/L	C	NV
Barium	FILT	0.040	mg/L	C	-	FILT	0.051	mg/L	C	-		NA			
Barium		NA					NA				UNKN	0.200	mg/L	C	NV
Cadmium	FILT	0.005	mg/L	C	U	FILT	0.005	mg/L	C	U		NA			
Cadmium		NA					NA				UNKN	0.001	mg/L	C	NV
Calcium	FILT	120.000	mg/L	C	-	FILT	160.000	mg/L	C	-		NA			
Calcium		NA					NA				UNKN	126.000	mg/L	C	NV
Chromium	FILT	0.020	mg/L	C	-	FILT	0.020	mg/L	C	-		NA			
Chromium		NA					NA				UNKN	0.005	mg/L	C	NV
Copper	FILT	0.010	mg/L	C	U	FILT	0.010	mg/L	C	U		NA			
Copper		NA					NA				UNKN	0.025	mg/L	C	NV
Cyanide		NA					NA				UNKN	0.005	mg/L	C	NV
Iron	FILT	0.180	mg/L	C	-	FILT	0.400	mg/L	C	-		NA			
Iron		NA					NA				UNKN	5.700	mg/L	C	NV
Lead	FILT	0.002	mg/L	C	U	FILT	0.002	mg/L	C	U		NA			
Lead		NA					NA				UNKN	0.005	mg/L	C	NV
Magnesium	FILT	26.000	mg/L	C	-	FILT	31.000	mg/L	C	-		NA			
Magnesium		NA					NA				UNKN	34.900	mg/L	C	NV
Manganese	FILT	0.230	mg/L	C	-	FILT	0.550	mg/L	C	-		NA			
Manganese		NA					NA				UNKN	0.423	mg/L	C	NV
Mercury	FILT	0.000	mg/L	C	UJ	FILT	0.000	mg/L	C	UJ		NA			
Mercury		NA					NA				UNKN	0.000	mg/L	C	NV
Molybdenum	FILT	0.010	mg/L	C	-	FILT	0.010	mg/L	C	-		NA			
Nickel	FILT	0.030	mg/L	C	U	FILT	0.030	mg/L	C	U		NA			
Nickel		NA					NA				UNKN	0.005	mg/L	C	NV
Potassium	FILT	2.900	mg/L	C	-	FILT	3.700	mg/L	C	-		NA			
Potassium		NA					NA				UNKN	4.690	mg/L	C	NV
Selenium	FILT	0.005	mg/L	C	U	FILT	0.005	mg/L	C	U		NA			
Selenium		NA					NA				UNKN	0.002	mg/L	C	NV
Silver	FILT	0.010	mg/L	C	U	FILT	0.010	mg/L	C	U		NA			
Silver		NA					NA				UNKN	0.030	mg/L	C	NV
Sodium	FILT	12.000	mg/L	C	-	FILT	12.000	mg/L	C	-		NA			
Sodium		NA					NA				UNKN	37.200	mg/L	C	NV
Zinc		NA					NA				UNKN	0.020	mg/L	C	NV
Semivolatile Organics															
2-Chloro-N-(2,6-diethylphenyl)-N-(methoxy		NA					NA				UNFI	2000.000	ug/L	C	NV
6-Chloro-N,N'-diethyl-1,3,5-triazine-2,4-		NA					NA				UNFI	1000.000	ug/L	C	NV
Herbicide Organics															
2,4,5-TP (Silvex)		NA					NA				UNFI	500.000	ug/L	C	NV

000863

6508

TABLE D-11A
(Continued)

PHASE I - CHEMICAL PARAMETERS

BORING NUMBER		2042					2042					4101			
SAMPLE NUMBER		003921					004036 DUPLICATE					003031			
SAMPLING DATE		03/01/89					03/01/89					12/04/87			
CHEMICAL PARAMETERS	FLTD	RESULTS	UNITS	L	VQ	FLTD	RESULTS	UNITS	L	VQ	FLTD	RESULTS	UNITS	L	VQ
Herbicide Organics															
2,4-D		NA					NA				UNFI	1000.000	ug/L	C	NV
Atrazine		NA					NA				UNFI	1000.000	ug/L	C	NV
Cyanazine		NA					NA				UNFI	1000.000	ug/L	C	NV
Linuron		NA					NA				UNFI	1000.000	ug/L	C	NV
Metribuzin		NA					NA				UNFI	1000.000	ug/L	C	NV
Pesticide Organics/PCBs															
Endrin		NA					NA				UNFI	200.000	ug/L	C	NV
Fonofos		NA					NA				UNFI	1000.000	ug/L	C	NV
Methoxychlor		NA					NA				UNFI	200.000	ug/L	C	NV
Metolachlor		NA					NA				UNFI	1000.000	ug/L	C	NV
Phosphorodithioic acid, O,O-diethyl-S-(((		NA					NA				UNFI	1000.000	ug/L	C	NV
Toxaphene		NA					NA				UNFI	500.000	ug/L	C	NV
gamma-BHC (Lindane)		NA					NA				UNFI	200.000	ug/L	C	NV
Dioxin Furan															
Carbofuran		NA					NA				UNFI	1000.000	ug/L	C	NV
General Chemistry															
Ammonia	UNFI	0.300	mg/L	C	-	UNFI	0.200	mg/L	C	-		NA			
Chemical Oxygen Demand		NA					NA				UNFI	10.000	mg/L	C	NV
Chloride	UNFI	22.000	mg/L	C	U	UNFI	21.000	mg/L	C	U	UNFI	40.000	mg/L	C	NV
Fluoride	UNFI	0.200	mg/L	C	-	UNFI	0.200	mg/L	C	-	UNFI	0.150	mg/L	C	NV
Hexavalent Chromium		NA					NA				UNFI	0.005	mg/L	C	NV
Nitrate	UNFI	0.670	mg/L	C	J	UNFI	0.390	mg/L	C	J	UNFI	0.020	mg/L	C	NV
Phenols	UNFI	0.005	mg/L	C	U	UNFI	0.055	mg/L	C	-	UNFI	0.005	mg/L	C	NV
Phosphorus	UNFI	0.550	mg/L	C	-	UNFI	0.670	mg/L	C	-	UNFI	0.120	mg/L	C	NV
Sulfate	UNFI	100.000	mg/L	C	-	UNFI	140.000	mg/L	C	-		NA			
Sulfate		NA					NA				UNKN	140.000	mg/L	C	NV
Total Dissolved Solids		NA					NA				FILT	604.000	mg/L	C	NV
Total Kjeldahl Nitrogen	UNFI	0.600	mg/L	C	-	UNFI	0.500	mg/L	C	U		NA			
Total Organic Carbon		NA					NA				UNFI	1.000	mg/L	C	NV
Total Organic Halides		NA					NA				UNFI	0.016	mg/L	C	NV
Total Organic Nitrogen	UNFI	0.300	mg/L	C	-	UNFI	0.300	mg/L	C	U		NA			

TABLE D-11A
(Continued)

PHASE I - CHEMICAL PARAMETERS

BORING NUMBER	4101					4101					4101			
SAMPLE NUMBER	003207					003409					003410 DUPLICATE			
SAMPLING DATE	05/19/88					08/08/88					08/08/88			
CHEMICAL PARAMETERS	FLTD	RESULTS	UNITS	L	VQ	FLTD	RESULTS	UNITS	L	VQ	FLTD	RESULTS	UNITS	L	VQ
Inorganics															
Arsenic		NA				*F	0.010	mg/L	D	R	*F	0.010	mg/L	D	R
Arsenic	FILT	0.200	mg/L	C	U		NA					NA			
Barium		NA				*F	0.200	mg/L	D	R	*F	0.200	mg/L	D	R
Barium	FILT	0.165	mg/L	C	-		NA					NA			
Cadmium		NA				*F	0.005	mg/L	D	R	*F	0.005	mg/L	D	R
Cadmium	FILT	0.005	mg/L	C	U		NA					NA			
Calcium		NA				*F	130.000	mg/L	D	R	*F	130.000	mg/L	D	R
Calcium	FILT	128.900	mg/L	C	-		NA					NA			
Chromium		NA				*F	0.010	mg/L	D	R	*F	0.010	mg/L	D	R
Chromium	FILT	0.020	mg/L	C	U		NA					NA			
Copper		NA				*F	0.030	mg/L	D	R	*F	0.030	mg/L	D	R
Copper	FILT	0.010	mg/L	C	U		NA					NA			
Iron		NA				*F	5.800	mg/L	D	R	*F	5.800	mg/L	D	R
Iron	FILT	5.840	mg/L	C	-		NA					NA			
Lead		NA				*F	0.005	mg/L	D	R	*F	0.005	mg/L	D	R
Lead	FILT	0.050	mg/L	C	U		NA					NA			
Magnesium		NA				*F	28.000	mg/L	D	R	*F	29.000	mg/L	D	R
Magnesium	FILT	35.500	mg/L	C	-		NA					NA			
Manganese		NA				*F	0.450	mg/L	D	R	*F	0.450	mg/L	D	R
Manganese	FILT	0.471	mg/L	C	-		NA					NA			
Mercury		NA				*F	0.000	mg/L	C	R	*F	0.000	mg/L	C	R
Mercury	FILT	0.000	mg/L	C	U		NA					NA			
Molybdenum		NA				*F	0.050	mg/L	D	R	*F	0.050	mg/L	D	R
Molybdenum	FILT	0.020	mg/L	C	U		NA					NA			
Nickel		NA				*F	0.040	mg/L	D	R	*F	0.040	mg/L	D	R
Nickel	FILT	0.020	mg/L	C	U		NA					NA			
Potassium		NA				*F	5.000	mg/L	D	R	*F	5.000	mg/L	D	R
Potassium	FILT	4.870	mg/L	C	-		NA					NA			
Selenium		NA				*F	0.005	mg/L	D	R	*F	0.005	mg/L	D	R
Selenium	FILT	0.200	mg/L	C	U		NA					NA			
Silver		NA				*F	0.010	mg/L	D	R	*F	0.010	mg/L	D	R
Silver	FILT	0.010	mg/L	C	U		NA					NA			
Sodium		NA				*F	38.000	mg/L	D	R	*F	38.000	mg/L	D	R
Sodium	FILT	39.300	mg/L	C	-		NA					NA			
General Chemistry															
Ammonia	UNFI	3.600	mg/L	C	J	UNFI	4.800	mg/L	D	R	UNFI	3.100	mg/L	D	R
Chloride	UNFI	38.400	mg/L	C	J	UNFI	40.000	mg/L	C	NV	UNFI	35.000	mg/L	C	NV
Fluoride	UNFI	0.400	mg/L	C	-	UNFI	0.200	mg/L	C	NV	UNFI	0.140	mg/L	C	NV
Nitrate	UNFI	0.100	mg/L	C	U	UNFI	2.500	mg/L	C	NV	UNFI	2.500	mg/L	C	NV
Phenols	UNFI	0.010	mg/L	C	U	UNFI	0.010	mg/L	C	NV	UNFI	0.010	mg/L	C	NV

TABLE D-11A
(Continued)

PHASE I - CHEMICAL PARAMETERS

BORING NUMBER		4101					4101					4101			
SAMPLE NUMBER		003207					003409					003410 DUPLICATE			
SAMPLING DATE		05/19/88					08/08/88					08/08/88			
CHEMICAL PARAMETERS	FLTD	RESULTS	UNITS	L	VQ	FLTD	RESULTS	UNITS	L	VQ	FLTD	RESULTS	UNITS	L	VQ
General Chemistry															
Phosphate		NA				UNFI	0.170	mg/L	C	NV	UNFI	0.220	mg/L	D	NV
Phosphorus	UNKN	0.195	mg/L	C	-		NA					NA			
Sulfate	UNFI	182.000	mg/L	C	-	UNFI	130.000	mg/L	C	NV	UNFI	110.000	mg/L	D	NV
Total Organic Nitrogen	UNFI	0.400	mg/L	C	J	UNFI	0.100	mg/L	D	R	UNFI	1.500	mg/L	D	R

000866

TABLE D-11A
(Continued)

PHASE I - CHEMICAL PARAMETERS

BORING NUMBER		4101					4101					4101			
SAMPLE NUMBER		003719					003918					066737			
SAMPLING DATE		11/18/88					03/15/89					12/07/89			
CHEMICAL PARAMETERS	FLTD	RESULTS	UNITS	L	VQ	FLTD	RESULTS	UNITS	L	VQ	FLTD	RESULTS	UNITS	L	VQ
Inorganics															
Aluminum		NA				FILT	0.130	mg/L	D	U	FILT	0.050	mg/L	C	NV
Aluminum		NA				NA					UNKN	0.169	mg/L	C	NV
Antimony		NA				FILT	0.001	mg/L	D	U		NA			
Arsenic	FILT	0.002	mg/L	C	UJ	FILT	0.002	mg/L	D	UJ	FILT	0.002	mg/L	C	NV
Arsenic		NA				NA					UNKN	0.002	mg/L	C	NV
Barium	FILT	0.151	mg/L	C	-	FILT	0.136	mg/L	D	-	FILT	0.400	mg/L	C	NV
Barium		NA				NA					UNKN	0.328	mg/L	C	NV
Beryllium		NA				FILT	0.001	mg/L	D	U	FILT	0.010	mg/L	C	NV
Beryllium		NA				NA					UNKN	0.010	mg/L	C	NV
Cadmium	FILT	0.002	mg/L	C	U	FILT	0.005	mg/L	D	U		NA			
Calcium	FILT	116.000	mg/L	C	-	FILT	113.000	mg/L	D	-	FILT	115.000	mg/L	C	NV
Calcium		NA				NA					UNKN	110.000	mg/L	C	NV
Chromium	FILT	0.020	mg/L	C	U	FILT	0.023	mg/L	D	U	FILT	0.005	mg/L	C	NV
Chromium		NA				NA					UNKN	0.005	mg/L	C	NV
Cobalt		NA				FILT	0.004	mg/L	D	U	FILT	0.025	mg/L	C	NV
Cobalt		NA				NA					UNKN	0.025	mg/L	C	NV
Copper	FILT	0.010	mg/L	C	U	FILT	0.013	mg/L	D	U	FILT	0.025	mg/L	C	NV
Copper		NA				NA					UNKN	0.025	mg/L	C	NV
Cyanide		NA				UNKN	0.010	mg/L	D	UJ		NA			
Iron	FILT	4.940	mg/L	C	-	FILT	4.230	mg/L	D	-	FILT	4.740	mg/L	C	NV
Iron		NA				NA					UNKN	4.860	mg/L	C	NV
Lead	FILT	0.003	mg/L	C	R	FILT	0.002	mg/L	D	UJ	FILT	0.005	mg/L	C	NV
Lead		NA				NA					UNKN	0.005	mg/L	C	NV
Magnesium	FILT	30.500	mg/L	C	-	FILT	29.600	mg/L	D	-	FILT	32.700	mg/L	C	NV
Magnesium		NA				NA					UNKN	31.000	mg/L	C	NV
Manganese	FILT	0.411	mg/L	C	-	FILT	0.348	mg/L	D	-	FILT	0.417	mg/L	C	NV
Manganese		NA				NA					UNKN	0.422	mg/L	C	NV
Mercury	FILT	0.000	mg/L	C	U	FILT	0.000	mg/L	D	U		NA			
Molybdenum	FILT	0.020	mg/L	C	U	FILT	0.004	mg/L	D	-		NA			
Nickel	FILT	0.020	mg/L	C	U	FILT	0.016	mg/L	D	-	FILT	0.005	mg/L	C	NV
Nickel		NA				NA					UNKN	0.005	mg/L	C	NV
Potassium	FILT	4.120	mg/L	C	-	FILT	3.440	mg/L	D	-		NA			
Selenium	FILT	0.002	mg/L	C	UJ	FILT	0.002	mg/L	D	R		NA			
Silver	FILT	0.001	mg/L	C	U	FILT	0.001	mg/L	D	U	FILT	0.001	mg/L	C	NV
Silver		NA				NA					UNKN	0.001	mg/L	C	NV
Sodium	FILT	32.700	mg/L	C	-	FILT	30.200	mg/L	D	-	FILT	31.100	mg/L	C	NV
Sodium		NA				NA					UNKN	38.300	mg/L	C	NV
Thallium		NA				FILT	0.002	mg/L	D	R		NA			
Vanadium		NA				FILT	0.014	mg/L	D	U	FILT	0.050	mg/L	C	NV
Vanadium		NA				NA					UNKN	0.050	mg/L	C	NV
Zinc		NA				FILT	0.009	mg/L	D	U	FILT	0.020	mg/L	C	NV
Zinc		NA				NA					UNKN	0.020	mg/L	C	NV

TABLE D-11A
(Continued)

PHASE I - CHEMICAL PARAMETERS

BORING NUMBER		4101					4101					4101			
SAMPLE NUMBER		003719					003918					066737			
SAMPLING DATE		11/18/88					03/15/89					12/07/89			
CHEMICAL PARAMETERS	FLTD	RESULTS	UNITS	L	VQ	FLTD	RESULTS	UNITS	L	VQ	FLTD	RESULTS	UNITS	L	VQ
Volatile Organics															
1,1,1-Trichloroethane		NA				UNFI	5.000	ug/L	D	U		NA			
1,1,2,2-Tetrachloroethane		NA				UNFI	5.000	ug/L	D	U		NA			
1,1,2-Trichloroethane		NA				UNFI	5.000	ug/L	D	U		NA			
1,1-Dichloroethane		NA				UNFI	5.000	ug/L	D	U	UNFI	2.500	ug/L	C	NV
1,1-Dichloroethene		NA				UNFI	5.000	ug/L	D	U		NA			
1,2-Dichloroethane		NA				UNFI	5.000	ug/L	D	U	UNFI	2.500	ug/L	C	NV
1,2-Dichloroethene		NA				UNFI	5.000	ug/L	D	U		NA			
1,2-Dichloropropane		NA				UNFI	5.000	ug/L	D	U		NA			
2-Butanone		NA				UNFI	10.000	ug/L	D	R		NA			
2-Hexanone		NA				UNFI	10.000	ug/L	D	UJ		NA			
4-Methyl-2-pentanone		NA				UNFI	10.000	ug/L	D	UJ		NA			
Acetone		NA				UNFI	10.000	ug/L	D	UJ	UNFI	2.500	ug/L	C	NV
Benzene		NA				UNFI	5.000	ug/L	D	UJ		NA			
Bromodichloromethane		NA				UNFI	5.000	ug/L	D	U		NA			
Bromoform		NA				UNFI	5.000	ug/L	D	U		NA			
Bromomethane		NA				UNFI	10.000	ug/L	D	U		NA			
Carbon Tetrachloride		NA				UNFI	5.000	ug/L	D	U		NA			
Carbon disulfide		NA				UNFI	5.000	ug/L	D	U		NA			
Chlorobenzene		NA				UNFI	5.000	ug/L	D	UJ		NA			
Chloroethane		NA				UNFI	10.000	ug/L	D	U		NA			
Chloroform		NA				UNFI	5.000	ug/L	D	U		NA			
Chloromethane		NA				UNFI	10.000	ug/L	D	U		NA			
Dibromochloromethane		NA				UNFI	5.000	ug/L	D	U		NA			
Ethylbenzene		NA				UNFI	5.000	ug/L	D	UJ		NA			
Methylene chloride		NA				UNFI	5.000	ug/L	D	U	UNFI	2.500	ug/L	C	NV
Styrene		NA				UNFI	5.000	ug/L	D	UJ		NA			
Tetrachloroethene		NA				UNFI	5.000	ug/L	D	U	UNFI	2.500	ug/L	C	NV
Toluene		NA				UNFI	5.000	ug/L	D	UJ	UNFI	2.500	ug/L	C	NV
Trichloroethene		NA				UNFI	5.000	ug/L	D	U	UNFI	2.500	ug/L	C	NV
Vinyl Acetate		NA				UNFI	10.000	ug/L	D	U		NA			
Vinyl chloride		NA				UNFI	10.000	ug/L	D	U		NA			
Xylenes, Total		NA				UNFI	5.000	ug/L	D	UJ		NA			
cis-1,3-Dichloropropene		NA				UNFI	5.000	ug/L	D	U		NA			
trans-1,3-Dichloropropene		NA				UNFI	5.000	ug/L	D	U		NA			
Semivolatile Organics															
1,2,4-Trichlorobenzene		NA				UNFI	10.000	ug/L	D	U		NA			
1,2-Dichlorobenzene		NA				UNFI	10.000	ug/L	D	U		NA			
1,3-Dichlorobenzene		NA				UNFI	10.000	ug/L	D	U		NA			
1,4-Dichlorobenzene		NA				UNFI	10.000	ug/L	D	U		NA			
2,4,5-Trichlorophenol		NA				UNFI	50.000	ug/L	D	U		NA			

000868

TABLE D-11A
(Continued)

PHASE I - CHEMICAL PARAMETERS

BORING NUMBER		4101				4101				4101			
SAMPLE NUMBER		003719				003918				066737			
SAMPLING DATE		11/18/88				03/15/89				12/07/89			
CHEMICAL PARAMETERS	FLTD	RESULTS	UNITS	L	VQ	FLTD	RESULTS	UNITS	L	VQ	FLTD	RESULTS	UNITS	L	VQ
Semivolatile Organics															
2,4,6-Trichlorophenol		NA				UNFI	10.000	ug/L	D	U		NA			
2,4-Dichlorophenol		NA				UNFI	10.000	ug/L	D	U		NA			
2,4-Dimethylphenol		NA				UNFI	10.000	ug/L	D	U		NA			
2,4-Dinitrophenol		NA				UNFI	50.000	ug/L	D	U		NA			
2,4-Dinitrotoluene		NA				UNFI	10.000	ug/L	D	U		NA			
2,6-Dinitrotoluene		NA				UNFI	10.000	ug/L	D	U		NA			
2-Chloronaphthalene		NA				UNFI	10.000	ug/L	D	U		NA			
2-Chlorophenol		NA				UNFI	10.000	ug/L	D	U		NA			
2-Methylnaphthalene		NA				UNFI	10.000	ug/L	D	U		NA			
2-Methylphenol		NA				UNFI	10.000	ug/L	D	U		NA			
2-Nitroaniline		NA				UNFI	50.000	ug/L	D	U		NA			
2-Nitrophenol		NA				UNFI	10.000	ug/L	D	U		NA			
3,3'-Dichlorobenzidine		NA				UNFI	20.000	ug/L	D	UJ		NA			
3-Nitroaniline		NA				UNFI	50.000	ug/L	D	U		NA			
4,6-Dinitro-2-methylphenol		NA				UNFI	50.000	ug/L	D	U		NA			
4-Bromophenyl phenyl ether		NA				UNFI	10.000	ug/L	D	U		NA			
4-Chloro-3-methylphenol		NA				UNFI	10.000	ug/L	D	U		NA			
4-Chlorophenylphenyl ether		NA				UNFI	10.000	ug/L	D	UJ		NA			
4-Methylphenol		NA				UNFI	10.000	ug/L	D	U		NA			
4-Nitroaniline		NA				UNFI	50.000	ug/L	D	UJ		NA			
4-Nitrophenol		NA				UNFI	50.000	ug/L	D	U		NA			
Acenaphthene		NA				UNFI	10.000	ug/L	D	U		NA			
Acenaphthylene		NA				UNFI	10.000	ug/L	D	U		NA			
Anthracene		NA				UNFI	10.000	ug/L	D	U		NA			
Benzo(a)anthracene		NA				UNFI	10.000	ug/L	D	U		NA			
Benzo(a)pyrene		NA				UNFI	10.000	ug/L	D	U		NA			
Benzo(b)fluoranthene		NA				UNFI	10.000	ug/L	D	U		NA			
Benzo(g,h,i)perylene		NA				UNFI	10.000	ug/L	D	U		NA			
Benzo(k)fluoranthene		NA				UNFI	10.000	ug/L	D	UJ		NA			
Benzoic acid		NA				UNFI	50.000	ug/L	D	U		NA			
Benzyl alcohol		NA				UNFI	10.000	ug/L	D	U		NA			
Butyl benzyl phthalate		NA				UNFI	10.000	ug/L	D	U		NA			
Chrysene		NA				UNFI	10.000	ug/L	D	U		NA			
Di-n-butyl phthalate		NA				UNFI	10.000	ug/L	D	UJ		NA			
Di-n-octyl phthalate		NA				UNFI	10.000	ug/L	D	U		NA			
Dibenzo(a,h)anthracene		NA				UNFI	10.000	ug/L	D	U		NA			
Dibenzofuran		NA				UNFI	10.000	ug/L	D	U		NA			
Diethyl phthalate		NA				UNFI	10.000	ug/L	D	U		NA			
Dimethyl phthalate		NA				UNFI	10.000	ug/L	D	U		NA			
Fluoranthene		NA				UNFI	10.000	ug/L	D	U		NA			
Fluorene		NA				UNFI	10.000	ug/L	D	U		NA			
Hexachlorobenzene		NA				UNFI	10.000	ug/L	D	U		NA			

TABLE D-11A
(Continued)

PHASE I - CHEMICAL PARAMETERS

BORING NUMBER		4101				4101				4101		
SAMPLE NUMBER		003719				003918				066737		
SAMPLING DATE		11/18/88				03/15/89				12/07/89		
CHEMICAL PARAMETERS	FLTD	RESULTS	UNITS	L	VQ	FLTD	RESULTS	UNITS	L	VQ	FLTD	RESULTS	UNITS	L	VQ
Semivolatile Organics															
Hexachlorobutadiene		NA				UNFI	10.000	ug/L	D	U		NA			
Hexachlorocyclopentadiene		NA				UNFI	10.000	ug/L	D	U		NA			
Hexachloroethane		NA				UNFI	10.000	ug/L	D	U		NA			
Indeno(1,2,3-cd)pyrene		NA				UNFI	10.000	ug/L	D	U		NA			
Isophorone		NA				UNFI	10.000	ug/L	D	U		NA			
N-Nitroso-di-n-propylamine		NA				UNFI	10.000	ug/L	D	U		NA			
N-Nitrosodiphenylamine		NA				UNFI	10.000	ug/L	D	U		NA			
Naphthalene		NA				UNFI	10.000	ug/L	D	U		NA			
Nitrobenzene		NA				UNFI	10.000	ug/L	D	U		NA			
Pentachlorophenol		NA				UNFI	50.000	ug/L	D	U		NA			
Phenanthrene		NA				UNFI	10.000	ug/L	D	U		NA			
Phenol		NA				UNFI	10.000	ug/L	D	U		NA			
Pyrene		NA				UNFI	10.000	ug/L	D	U		NA			
bis(2-Chloroethoxy)methane		NA				UNFI	10.000	ug/L	D	U		NA			
bis(2-Chloroethyl)ether		NA				UNFI	10.000	ug/L	D	U		NA			
bis(2-Chloroisopropyl) ether		NA				UNFI	10.000	ug/L	D	U		NA			
bis(2-Ethylhexyl) phthalate		NA				UNFI	10.000	ug/L	D	U		NA			
p-Chloroaniline		NA				UNFI	10.000	ug/L	D	U		NA			
Pesticide Organics/PCBs															
4,4'-DDD		NA				UNFI	0.100	ug/L	D	U		NA			
4,4'-DDE		NA				UNFI	0.100	ug/L	D	U		NA			
4,4'-DDT		NA				UNFI	0.100	ug/L	D	U		NA			
Aldrin		NA				UNFI	0.050	ug/L	D	U		NA			
Aroclor-1016		NA				UNFI	0.500	ug/L	D	U		NA			
Aroclor-1221		NA				UNFI	0.500	ug/L	D	U		NA			
Aroclor-1232		NA				UNFI	0.500	ug/L	D	U		NA			
Aroclor-1242		NA				UNFI	0.500	ug/L	D	U		NA			
Aroclor-1248		NA				UNFI	0.500	ug/L	D	U		NA			
Aroclor-1254		NA				UNFI	1.000	ug/L	D	U		NA			
Aroclor-1260		NA				UNFI	1.000	ug/L	D	U		NA			
Dieldrin		NA				UNFI	0.100	ug/L	D	U		NA			
Endosulfan II		NA				UNFI	0.100	ug/L	D	U		NA			
Endosulfan sulfate		NA				UNFI	0.100	ug/L	D	U		NA			
Endosulfan-I		NA				UNFI	0.050	ug/L	D	U		NA			
Endrin		NA				UNFI	0.100	ug/L	D	U		NA			
Endrin ketone		NA				UNFI	0.100	ug/L	D	U		NA			
Heptachlor		NA				UNFI	0.050	ug/L	D	U		NA			
Heptachlor epoxide		NA				UNFI	0.050	ug/L	D	U		NA			
Methoxychlor		NA				UNFI	0.500	ug/L	D	U		NA			
Toxaphene		NA				UNFI	1.000	ug/L	D	U		NA			

TABLE D-11A
(Continued)

PHASE I - CHEMICAL PARAMETERS

BORING NUMBER	4101					4101					4101				
SAMPLE NUMBER	003719					003918					066737				
SAMPLING DATE	11/18/88					03/15/89					12/07/89				
CHEMICAL PARAMETERS	FLTD	RESULTS	UNITS	L	VQ	FLTD	RESULTS	UNITS	L	VQ	FLTD	RESULTS	UNITS	L	VQ
Pesticide Organics/PCBs															
alpha-BHC		NA				UNFI	0.050	ug/L	D	U		NA			
alpha-Chlordane		NA				UNFI	0.500	ug/L	D	U		NA			
beta-BHC		NA				UNFI	0.050	ug/L	D	U		NA			
delta-BHC		NA				UNFI	0.050	ug/L	D	U		NA			
gamma-BHC (Lindane)		NA				UNFI	0.050	ug/L	D	U		NA			
gamma-Chlordane		NA				UNFI	0.500	ug/L	D	U		NA			
General Chemistry															
Ammonia	UNFI	6.630	mg/L	C	-	UNFI	5.130	mg/L	C	J		NA			
Chloride	UNFI	36.900	mg/L	C	-	UNFI	38.000	mg/L	C	-	UNFI	36.000	mg/L	C	NV
Fluoride	UNFI	0.245	mg/L	C	-	UNFI	0.210	mg/L	C	-	UNFI	0.240	mg/L	C	NV
Nitrate	UNFI	0.100	mg/L	C	R	UNFI	0.380	mg/L	C	J	UNFI	0.410	mg/L	C	NV
Phenols	UNFI	0.015	mg/L	C	-	UNFI	0.010	mg/L	C	U	UNFI	0.025	mg/L	C	NV
Phosphorus	UNFI	0.031	mg/L	C	-	UNFI	0.146	mg/L	C	-		NA			
Sulfate	UNFI	97.200	mg/L	C	J	UNFI	161.830	mg/L	C	J	UNFI	105.000	mg/L	C	NV
Total Kjeldahl Nitrogen	UNFI	6.790	mg/L	C	-	UNFI	3.480	mg/L	C	J		NA			
Total Organic Carbon		NA					NA				UNFI	1.000	mg/L	C	NV
Total Organic Halides	UNFI	0.050	mg/L	C	U	UNFI	0.014	mg/L	C	-	UNFI	0.010	mg/L	C	NV
Total Organic Nitrogen	UNFI	0.160	mg/L	C	-	UNFI	0.100	mg/L	C	UJ		NA			

TABLE D-11A
(Continued)

PHASE I - CHEMICAL PARAMETERS

BORING NUMBER	4101					4102					4102				
SAMPLE NUMBER	003208					003205					003412				
	DUPLICATE														
SAMPLING DATE	05/19/88					05/19/88					08/08/88				
CHEMICAL PARAMETERS	FLTD	RESULTS	UNITS	L	VQ	FLTD	RESULTS	UNITS	L	VQ	FLTD	RESULTS	UNITS	L	VQ
Inorganics															
Arsenic	FILT	0.200	mg/L	C	U	FILT	0.220	mg/L	C	U		NA			
Arsenic		NA					NA				UNKN	0.010	mg/L	D	R
Barium	FILT	0.159	mg/L	C	-	FILT	0.067	mg/L	C	-		NA			
Barium		NA					NA				UNKN	0.200	mg/L	D	R
Cadmium	FILT	0.005	mg/L	C	U	FILT	0.005	mg/L	C	U		NA			
Cadmium		NA					NA				UNKN	0.005	mg/L	D	R
Calcium	FILT	122.900	mg/L	C	-	FILT	95.900	mg/L	C	-		NA			
Calcium		NA					NA				UNKN	100.000	mg/L	D	R
Chromium	FILT	0.020	mg/L	C	U	FILT	0.020	mg/L	C	U		NA			
Chromium		NA					NA				UNKN	0.010	mg/L	D	R
Copper	FILT	0.010	mg/L	C	U	FILT	0.010	mg/L	C	U		NA			
Copper		NA					NA				UNKN	0.030	mg/L	D	R
Iron	FILT	5.630	mg/L	C	-	FILT	3.190	mg/L	C	-		NA			
Iron		NA					NA				UNKN	3.300	mg/L	D	R
Lead	FILT	0.050	mg/L	C	U	FILT	0.050	mg/L	C	U		NA			
Lead		NA					NA				UNKN	0.005	mg/L	D	R
Magnesium	FILT	33.700	mg/L	C	-	FILT	27.200	mg/L	C	-		NA			
Magnesium		NA					NA				UNKN	25.000	mg/L	D	R
Manganese	FILT	0.434	mg/L	C	-	FILT	0.387	mg/L	C	-		NA			
Manganese		NA					NA				UNKN	42.000	mg/L	D	R
Mercury	FILT	0.000	mg/L	C	U	FILT	0.000	mg/L	C	U		NA			
Mercury		NA					NA				UNKN	0.000	mg/L	C	R
Molybdenum	FILT	0.028	mg/L	C	-	FILT	0.020	mg/L	C	U		NA			
Molybdenum		NA					NA				UNKN	0.050	mg/L	D	R
Nickel	FILT	0.020	mg/L	C	U	FILT	0.020	mg/L	C	U		NA			
Nickel		NA					NA				UNKN	0.040	mg/L	D	R
Potassium	FILT	3.880	mg/L	C	-	FILT	1.580	mg/L	C	-		NA			
Potassium		NA					NA				UNKN	5.000	mg/L	D	R
Selenium	FILT	0.200	mg/L	C	U	FILT	0.200	mg/L	C	U		NA			
Selenium		NA					NA				UNKN	0.005	mg/L	D	R
Silver	FILT	0.010	mg/L	C	U	FILT	0.020	mg/L	C	UJ		NA			
Silver		NA					NA				UNKN	0.010	mg/L	D	R
Sodium	FILT	37.100	mg/L	C	-	FILT	16.800	mg/L	C	-		NA			
Sodium		NA					NA				UNKN	20.000	mg/L	D	R
General Chemistry															
Ammonia	UNFI	0.200	mg/L	C	J	UNFI	0.500	mg/L	C	J	UNFI	0.400	mg/L	D	R
Chloride	UNFI	42.500	mg/L	C	J	UNFI	32.100	mg/L	C	J	UNFI	35.000	mg/L	D	NV
Fluoride	UNFI	0.380	mg/L	C	-	UNFI	0.350	mg/L	C	-	UNFI	0.200	mg/L	C	NV
Nitrate	UNFI	0.100	mg/L	C	-	UNFI	0.100	mg/L	C	-	UNFI	2.500	mg/L	C	NV
Phenols	UNFI	0.010	mg/L	C	U	UNFI	0.010	mg/L	C	U	UNFI	0.010	mg/L	D	NV

000872

TABLE D-11A
(Continued)

PHASE I - CHEMICAL PARAMETERS

BORING NUMBER		4101					4102					4102			
SAMPLE NUMBER		003208 DUPLICATE					003205					003412			
SAMPLING DATE		05/19/88					05/19/88					08/08/88			
CHEMICAL PARAMETERS	FLTD	RESULTS	UNITS	L	VQ	FLTD	RESULTS	UNITS	L	VQ	FLTD	RESULTS	UNITS	L	VQ
General Chemistry															
Phosphate		NA					NA				UNFI	0.160	mg/L	C	NV
Phosphorus	UNFI	0.180	mg/L	C	-	UNFI	0.180	mg/L	C	-		NA			
Sulfate	UNFI	137.000	mg/L	C	-	UNFI	11.000	mg/L	C	-	UNFI	108.000	mg/L	C	NV
Total Organic Nitrogen	UNFI	3.500	mg/L	C	J	UNFI	0.100	mg/L	C	UJ	UNFI	0.100	mg/L	D	R

000873

6508

TABLE D-11A
(Continued)

PHASE I - CHEMICAL PARAMETERS

BORING NUMBER	4102					4102					4102				
SAMPLE NUMBER	003720					003919					066739				
SAMPLING DATE	11/18/88					02/23/89					12/07/89				
CHEMICAL PARAMETERS	FLTD	RESULTS	UNITS	L	VQ	FLTD	RESULTS	UNITS	L	VQ	FLTD	RESULTS	UNITS	L	VQ
Inorganics															
Aluminum		NA					NA				FILT	0.050	mg/L	C	NV
Aluminum		NA					NA				UNKN	0.062	mg/L	C	NV
Arsenic	FILT	0.002	mg/L	C	UJ	FILT	0.003	mg/L	C	J	FILT	0.002	mg/L	C	NV
Arsenic		NA					NA				UNKN	0.002	mg/L	C	NV
Barium	FILT	0.069	mg/L	C	-	FILT	0.062	mg/L	C	J	FILT	0.200	mg/L	C	NV
Barium		NA					NA				UNKN	0.200	mg/L	C	NV
Beryllium		NA					NA				FILT	0.010	mg/L	C	NV
Beryllium		NA					NA				UNKN	0.010	mg/L	C	NV
Cadmium	FILT	0.002	mg/L	C	U	FILT	0.005	mg/L	C	UJ		NA			
Calcium	FILT	102.000	mg/L	C	-	FILT	97.000	mg/L	C	J	FILT	95.500	mg/L	C	NV
Calcium		NA					NA				UNKN	93.100	mg/L	C	NV
Chromium	FILT	0.020	mg/L	C	U	FILT	0.020	mg/L	C	J	FILT	0.005	mg/L	C	NV
Chromium		NA					NA				UNKN	0.005	mg/L	C	NV
Cobalt		NA					NA				FILT	0.025	mg/L	C	NV
Cobalt		NA					NA				UNKN	0.025	mg/L	C	NV
Copper	FILT	0.010	mg/L	C	U	FILT	0.010	mg/L	C	UJ	FILT	0.025	mg/L	C	NV
Copper		NA					NA				UNKN	0.025	mg/L	C	NV
Iron	FILT	3.270	mg/L	C	-	FILT	2.700	mg/L	C	J	FILT	2.820	mg/L	C	NV
Iron		NA					NA				UNKN	2.770	mg/L	C	NV
Lead	FILT	0.006	mg/L	C	R	FILT	0.002	mg/L	C	UJ	FILT	0.005	mg/L	C	NV
Lead		NA					NA				UNKN	0.005	mg/L	C	NV
Magnesium	FILT	27.900	mg/L	C	-	FILT	25.000	mg/L	C	J	FILT	27.400	mg/L	C	NV
Magnesium		NA					NA				UNKN	25.700	mg/L	C	NV
Manganese	FILT	0.421	mg/L	C	-	FILT	0.400	mg/L	C	J	FILT	0.394	mg/L	C	NV
Manganese		NA					NA				UNKN	0.399	mg/L	C	NV
Mercury	FILT	0.000	mg/L	C	U	FILT	0.000	mg/L	C	UJ		NA			
Molybdenum	FILT	0.020	mg/L	C	U	FILT	0.010	mg/L	C	J		NA			
Nickel	FILT	0.020	mg/L	C	U	FILT	0.030	mg/L	C	UJ	FILT	0.005	mg/L	C	NV
Nickel		NA					NA				UNKN	0.005	mg/L	C	NV
Potassium	FILT	2.330	mg/L	C	-	FILT	1.500	mg/L	C	J		NA			
Selenium	FILT	0.002	mg/L	C	UJ	FILT	0.005	mg/L	C	UJ		NA			
Silver	FILT	0.001	mg/L	C	U	FILT	0.010	mg/L	C	UJ	FILT	0.001	mg/L	C	NV
Silver		NA					NA				UNKN	0.001	mg/L	C	NV
Sodium	FILT	19.600	mg/L	C	-	FILT	14.000	mg/L	C	J	FILT	17.200	mg/L	C	NV
Sodium		NA					NA				UNKN	18.300	mg/L	C	NV
Vanadium		NA					NA				FILT	0.050	mg/L	C	NV
Vanadium		NA					NA				UNKN	0.050	mg/L	C	NV
Zinc		NA					NA				FILT	0.020	mg/L	C	NV
Zinc		NA					NA				UNKN	0.020	mg/L	C	NV
Volatile Organics															
1,1-Dichloroethane		NA					NA				UNFI	2.500	ug/L	C	NV

000874

TABLE D-11A
(Continued)

PHASE I - CHEMICAL PARAMETERS

BORING NUMBER		4102				4102				4102			
SAMPLE NUMBER		003720				003919				066739			
SAMPLING DATE		11/18/88				02/23/89				12/07/89			
CHEMICAL PARAMETERS	FLTD	RESULTS	UNITS	L	VQ	FLTD	RESULTS	UNITS	L	VQ	FLTD	RESULTS	UNITS	L	VQ
Volatile Organics															
1,2-Dichloroethane		NA					NA				UNFI	2.500	ug/L	C	NV
Acetone		NA					NA				UNKN	2.500	ug/L	C	NV
Methylene chloride		NA					NA				UNFI	2.500	ug/L	C	NV
Tetrachloroethene		NA					NA				UNFI	2.500	ug/L	C	NV
Toluene		NA					NA				UNFI	2.500	ug/L	C	NV
Trichloroethene		NA					NA				UNFI	2.500	ug/L	C	NV
General Chemistry															
Ammonia	UNFI	0.440	mg/L	C	-	UNFI	0.600	mg/L	C	J		NA			
Chloride	UNFI	23.100	mg/L	C	-	UNFI	20.000	mg/L	C	UJ		NA			
Chloride		NA					NA				UNKN	26.000	mg/L	C	NV
Fluoride	UNFI	0.260	mg/L	C	-	UNFI	0.200	mg/L	C	J	UNFI	0.250	mg/L	C	NV
Nitrate	UNFI	0.100	mg/L	C	R	UNFI	0.020	mg/L	C	R	UNFI	0.060	mg/L	C	NV
Phenols	UNFI	0.010	mg/L	C	U	UNFI	0.009	mg/L	C	J	UNFI	0.008	mg/L	C	NV
Phosphorus	UNFI	0.020	mg/L	C	U	UNFI	0.050	mg/L	C	J		NA			
Sulfate	UNFI	43.000	mg/L	C	J	UNFI	18.000	mg/L	C	J	UNFI	81.000	mg/L	C	NV
Total Kjeldahl Nitrogen	UNFI	0.580	mg/L	C	-	UNFI	0.800	mg/L	C	J		NA			
Total Organic Carbon		NA					NA				UNFI	2.000	mg/L	C	NV
Total Organic Halides	UNFI	0.050	mg/L	C	U	UNFI	0.010	mg/L	C	U	UNFI	0.010	mg/L	C	NV
Total Organic Nitrogen	UNFI	0.140	mg/L	C	-	UNFI	0.200	mg/L	C	J		NA			

TABLE D-11A
(Continued)

PHASE I - CHEMICAL PARAMETERS

BORING NUMBER	4102					4102				
SAMPLE NUMBER	003206					003413				
	DUPLICATE					DUPLICATE				
SAMPLING DATE	05/19/88					08/08/88				
CHEMICAL PARAMETERS	FLTD	RESULTS	UNITS	L	VQ	FLTD	RESULTS	UNITS	L	VQ
Inorganics										
Arsenic	FILT	0.200	mg/L	C	U	UNKN	0.010	mg/L	D	R
Arsenic	NA					NA				
Barium	FILT	0.068	mg/L	C	-	UNKN	0.200	mg/L	D	R
Barium	NA					NA				
Cadmium	FILT	0.005	mg/L	C	U	UNKN	0.005	mg/L	D	R
Cadmium	NA					NA				
Calcium	FILT	95.300	mg/L	C	-	UNKN	100.000	mg/L	D	R
Calcium	NA					NA				
Chromium	FILT	0.020	mg/L	C	U	UNKN	0.010	mg/L	D	R
Chromium	NA					NA				
Copper	FILT	0.010	mg/L	C	U	UNKN	0.030	mg/L	D	R
Copper	NA					NA				
Iron	FILT	3.080	mg/L	C	-	UNKN	3.200	mg/L	D	R
Iron	NA					NA				
Lead	FILT	0.050	mg/L	C	U	UNKN	0.005	mg/L	D	R
Lead	NA					NA				
Magnesium	FILT	26.800	mg/L	C	-	UNKN	24.000	mg/L	D	R
Magnesium	NA					NA				
Manganese	FILT	0.390	mg/L	C	-	UNKN	4.000	mg/L	D	R
Manganese	NA					NA				
Mercury	FILT	0.000	mg/L	C	U	UNKN	0.000	mg/L	C	R
Mercury	NA					NA				
Molybdenum	FILT	0.020	mg/L	C	U	UNKN	0.050	mg/L	D	R
Molybdenum	NA					NA				
Nickel	FILT	0.020	mg/L	C	U	UNKN	0.040	mg/L	D	R
Nickel	NA					NA				
Potassium	FILT	1.600	mg/L	C	-	UNKN	5.000	mg/L	D	R
Potassium	NA					NA				
Selenium	FILT	0.200	mg/L	C	U	UNKN	0.005	mg/L	D	R
Selenium	NA					NA				
Silver	FILT	0.010	mg/L	C	U	UNKN	0.010	mg/L	D	R
Silver	NA					NA				
Sodium	FILT	16.800	mg/L	C	-	UNKN	20.000	mg/L	D	R
Sodium	NA					NA				
General Chemistry										
Ammonia	UNFI	0.500	mg/L	C	J	UNFI	0.400	mg/L	C	NV
Chloride	UNFI	28.400	mg/L	C	J	UNFI	42.000	mg/L	C	NV
Fluoride	UNFI	0.290	mg/L	C	-	UNFI	0.200	mg/L	D	NV
Nitrate	UNFI	0.200	mg/L	C	-	UNFI	2.500	mg/L	C	NV
Phenols	UNFI	0.010	mg/L	C	U	UNFI	0.010	mg/L	C	NV

000876

TABLE D-11A
(Continued)

PHASE I - CHEMICAL PARAMETERS

BORING NUMBER		4102					4102			
SAMPLE NUMBER		003206					003413			
		DUPLICATE					DUPLICATE			
SAMPLING DATE		05/19/88					08/08/88			
CHEMICAL PARAMETERS	FLTD	RESULTS	UNITS	L	VQ	FLTD	RESULTS	UNITS	L	VQ
General Chemistry										
Phosphate		NA				UNFI	0.150	mg/L	C	NV
Phosphorus	UNFI	0.160	mg/L	C	-		NA			
Sulfate	UNFI	20.000	mg/L	C	-	UNFI	70.000	mg/L	C	NV
Total Organic Nitrogen	UNFI	0.100	mg/L	C	UJ	UNFI	0.200	mg/L	D	R

000877

6508

TABLE D-11A
(Continued)

PHASE II - RADIOLOGICAL PARAMETERS

BORING NUMBER	1039				1041				1041			
SAMPLE NUMBER	111990				116220				116221			
SAMPLING DATE	04/28/93				05/05/93				05/05/93			
RADIOLOGICAL PARAMETERS	FLTD	RESULTS	UNITS	VQ	FLTD	RESULTS	UNITS	VQ	FLTD	RESULTS	UNITS	VQ
CS-137	FILT	16.000	pci/L	UJ		NA			FILT	15.900	pci/L	UJ
CS-137		NA			UNFI	16.400	pci/L	UJ		NA		
GROSS ALPHA	FILT	13.500	pci/L	UJ		NA				NA		
GROSS ALPHA		NA			UNFI	17.300	pci/L	UJ		NA		
GROSS BETA	FILT	10.200	pci/L	UJ		NA				NA		
GROSS BETA		NA			UNFI	15.300	pci/L	J		NA		
NP-237	FILT	0.198	pci/L	U		NA			FILT	0.450	pci/L	R
NP-237		NA			UNFI	0.140	pci/L	R		NA		
PU-238	FILT	0.109	pci/L	UJ		NA			FILT	0.210	pci/L	UJ
PU-238		NA			UNFI	0.100	pci/L	UJ		NA		
PU-239/240	FILT	0.133	pci/L	UJ		NA			FILT	0.210	pci/L	UJ
PU-239/240		NA			UNFI	0.100	pci/L	UJ		NA		
RA-226	FILT	0.183	pci/L	UJ		NA			FILT	0.100	pci/L	UJ
RA-226		NA			UNFI	0.310	pci/L	J		NA		
RA-228	FILT	2.480	pci/L	UJ		NA			FILT	1.360	pci/L	UJ
RA-228		NA			UNFI	1.290	pci/L	UJ		NA		
RU-106	FILT	118.000	pci/L	UJ		NA			FILT	153.000	pci/L	UJ
RU-106		NA			UNFI	144.000	pci/L	UJ		NA		
SR-90	FILT	0.885	pci/L	U		NA			FILT	0.850	pci/L	UJ
SR-90		NA			UNFI	0.870	pci/L	UJ		NA		
TC-99	FILT	10.000	pci/L	UJ		NA			FILT	10.700	pci/L	UJ
TC-99		NA			UNFI	11.100	pci/L	UJ		NA		
TH-228	FILT	0.209	pci/L	UJ		NA			FILT	1.030	pci/L	UJ
TH-228		NA			UNFI	0.780	pci/L	J		NA		
TH-230	FILT	0.251	pci/L	J		NA			FILT	0.410	pci/L	UJ
TH-230		NA			UNFI	1.370	pci/L	-		NA		
TH-232	FILT	0.054	pci/L	UJ		NA			FILT	1.030	pci/L	UJ
TH-232		NA			UNFI	0.740	pci/L	J		NA		
TH-TOTAL	FILT	0.497	ug/L	UJ		NA			FILT	9.480	ug/L	UJ
TH-TOTAL		NA			UNFI	6.830	ug/L	-		NA		
U-234	FILT	0.391	pci/L	J		NA			FILT	2.450	pci/L	-
U-234		NA			UNFI	3.020	pci/L	-		NA		
U-235/236	FILT	0.058	pci/L	UJ		NA			FILT	0.180	pci/L	-
U-235/236		NA			UNFI	0.180	pci/L	J		NA		
U-238	FILT	0.416	pci/L	J		NA			FILT	2.720	pci/L	-
U-238		NA			UNFI	3.330	pci/L	-		NA		
U-TOTAL	FILT	1.000	ug/L	U		NA			FILT	8.300	ug/L	-
U-TOTAL		NA			UNFI	7.800	ug/L	-		NA		

TABLE D-11A
(Continued)

PHASE II - RADIOLOGICAL PARAMETERS

BORING NUMBER	1042				1934				1934			
SAMPLE NUMBER	110889				114620 DUPLICATE				114622			
SAMPLING DATE	04/22/93				05/13/93				05/13/93			
RADIOLOGICAL PARAMETERS	FLTD	RESULTS	UNITS	VQ	FLTD	RESULTS	UNITS	VQ	FLTD	RESULTS	UNITS	VQ
CS-137	UNFI	17.800	pci/L	UJ	UNFI	13.000	pci/L	UJ	UNFI	16.100	pci/L	UJ
GROSS ALPHA	UNFI	27.120	pci/L	J	UNFI	10.200	pci/L	UJ	UNFI	23.800	pci/L	J
GROSS BETA	UNFI	8.530	pci/L	UJ	UNFI	6.000	pci/L	UJ	UNFI	31.600	pci/L	J
NP-237	UNFI	0.100	pci/L	R	UNFI	0.149	pci/L	N	UNFI	0.839	pci/L	N
PU-238	UNFI	0.120	pci/L	UJ	UNFI	0.211	pci/L	UJ	UNFI	0.108	pci/L	UJ
PU-239/240	UNFI	0.100	pci/L	UJ	UNFI	0.256	pci/L	UJ	UNFI	0.274	pci/L	UJ
RA-226	UNFI	0.210	pci/L	J	UNFI	0.225	pci/L	-	UNFI	1.400	pci/L	-
RA-228	UNFI	1.730	pci/L	UJ	UNFI	1.390	pci/L	UJ	UNFI	1.870	pci/L	UJ
RU-106	UNFI	128.000	pci/L	UJ	UNFI	149.000	pci/L	UJ	UNFI	146.000	pci/L	UJ
SR-90	UNFI	3.450	pci/L	J	UNFI	0.781	pci/L	UJ	UNFI	0.973	pci/L	UJ
TC-99	UNFI	8.000	pci/L	UJ	UNFI	8.200	pci/L	UJ	UNFI	8.600	pci/L	UJ
TH-228	UNFI	0.240	pci/L	UJ	UNFI	0.332	pci/L	UJ	UNFI	2.870	pci/L	-
TH-230	UNFI	0.170	pci/L	UJ	UNFI	0.308	pci/L	UJ	UNFI	6.670	pci/L	-
TH-232	UNFI	0.170	pci/L	UJ	UNFI	0.332	pci/L	UJ	UNFI	2.600	pci/L	-
TH-TOTAL	UNFI	1.550	ug/L	UJ	UNFI	3.050	ug/L	UJ	UNFI	23.900	ug/L	-
U-234	UNFI	11.020	pci/L	J	UNFI	1.810	pci/L	-	UNFI	6.690	pci/L	-
U-235/236	UNFI	0.700	pci/L	J	UNFI	0.176	pci/L	-	UNFI	0.250	pci/L	-
U-238	UNFI	11.810	pci/L	J	UNFI	1.890	pci/L	-	UNFI	5.750	pci/L	-
U-TOTAL	UNFI	30.400	ug/L	-	UNFI	4.770	ug/L	-	UNFI	17.500	ug/L	-

000879

6508

TABLE D-11A
(Continued)

PHASE II - RADIOLOGICAL PARAMETERS

BORING NUMBER	1937				1937				1940			
SAMPLE NUMBER	114617				114782				114784			
SAMPLING DATE	05/11/93				06/01/93				06/11/93			
RADIOLOGICAL PARAMETERS	FLTD	RESULTS	UNITS	VQ	FLTD	RESULTS	UNITS	VQ	FLTD	RESULTS	UNITS	VQ
CS-137	UNFI	18.700	pci/L	UJ	UNFI	16.000	pci/L	UJ	UNFI	17.800	pci/L	UJ
GROSS ALPHA	UNFI	17.200	pci/L	UJ	UNFI	42.800	pci/L	J	UNFI	12.180	pci/L	UJ
GROSS BETA	UNFI	12.900	pci/L	UJ	UNFI	22.800	pci/L	UJ	UNFI	7.670	pci/L	UJ
NP-237	UNFI	0.333	pci/L	U	UNFI	0.150	pci/L	U	UNFI	0.339	pci/L	N
PU-238	UNFI	0.075	pci/L	UJ	UNFI	0.140	pci/L	U	UNFI	0.091	pci/L	UJ
PU-239/240	UNFI	0.183	pci/L	U	UNFI	0.053	pci/L	UJ	UNFI	0.106	pci/L	U
RA-226	UNFI	0.378	pci/L	UJ	UNFI	0.980	pci/L	UJ	UNFI	0.431	pci/L	U
RA-228	UNFI	2.090	pci/L	UJ		NA			UNFI	2.980	pci/L	U
RU-106	UNFI	141.000	pci/L	UJ	UNFI	143.000	pci/L	UJ	UNFI	120.000	pci/L	UJ
SR-90	UNFI	0.730	pci/L	UJ	UNFI	0.610	pci/L	UJ	UNFI	0.758	pci/L	UJ
TC-99	UNFI	9.100	pci/L	UJ	UNFI	12.500	pci/L	UJ	UNFI	9.400	pci/L	UJ
TH-228	UNFI	0.294	pci/L	UJ	UNFI	2.370	pci/L	-	UNFI	0.227	pci/L	UJ
TH-230	UNFI	3.040	pci/L	-	UNFI	2.740	pci/L	J	UNFI	0.123	pci/L	UJ
TH-232	UNFI	0.138	pci/L	UJ	UNFI	1.910	pci/L	-	UNFI	0.122	pci/L	UJ
TH-TOTAL	UNFI	1.260	ug/L	UJ	UNFI	17.400	ug/L	-	UNFI	1.120	ug/L	UJ
U-234	UNFI	2.420	pci/L	J	UNFI	3.170	pci/L	-	UNFI	3.140	pci/L	-
U-235/236	UNFI	0.078	pci/L	J	UNFI	0.165	pci/L	J	UNFI	0.076	pci/L	J
U-238	UNFI	2.130	pci/L	-	UNFI	3.190	pci/L	-	UNFI	2.580	pci/L	-
U-TOTAL	UNFI	5.160	ug/L	-	UNFI	6.480	ug/L	-	UNFI	6.300	ug/L	-

TABLE D-11A
(Continued)

PHASE II - RADIOLOGICAL PARAMETERS

BORING NUMBER		1940				2042				2042		
SAMPLE NUMBER		114785				110989				110990		
SAMPLING DATE		06/11/93				05/04/93				05/04/93		
RADIOLOGICAL PARAMETERS	FLTD	RESULTS	UNITS	VQ	FLTD	RESULTS	UNITS	VQ	FLTD	RESULTS	UNITS	VQ
CS-137		NA				NA			FILT	19.300	pci/L	UJ
CS-137	UNFI	11.800	pci/L	UJ	UNFI	18.900	pci/L	UJ		NA		
GROSS ALPHA	UNFI	30.300	pci/L	UJ	UNFI	7.510	pci/L	UJ		NA		
GROSS BETA	UNFI	20.900	pci/L	J	UNFI	5.230	pci/L	J		NA		
NP-237		NA				NA			FILT	0.740	pci/L	R
NP-237	UNFI	0.295	pci/L	U	UNFI	0.100	pci/L	N		NA		
PU-238		NA				NA			FILT	0.150	pci/L	UJ
PU-238	UNFI	0.115	pci/L	UJ	UNFI	0.050	pci/L	J		NA		
PU-239/240		NA				NA			FILT	0.070	pci/L	UJ
PU-239/240	UNFI	0.144	pci/L	UJ	UNFI	0.040	pci/L	UJ		NA		
RA-226		NA				NA			FILT	0.150	pci/L	J
RA-226	UNFI	1.210	pci/L	J	UNFI	0.120	pci/L	J		NA		
RA-228		NA				NA			FILT	1.940	pci/L	UJ
RA-228	UNFI	3.680	pci/L	J	UNFI	1.400	pci/L	UJ		NA		
RU-106		NA				NA			FILT	89.200	pci/L	UJ
RU-106	UNFI	106.000	pci/L	UJ	UNFI	168.000	pci/L	UJ		NA		
SR-90		NA				NA			FILT	0.810	pci/L	UJ
SR-90	UNFI	0.819	pci/L	UJ	UNFI	0.800	pci/L	UJ		NA		
TC-99		NA				NA			FILT	11.700	pci/L	UJ
TC-99	UNFI	10.930	pci/L	UJ	UNFI	11.200	pci/L	UJ		NA		
TH-228		NA				NA			FILT	0.490	pci/L	UJ
TH-228	UNFI	1.360	pci/L	-	UNFI	0.190	pci/L	UJ		NA		
TH-230		NA				NA			FILT	0.120	pci/L	UJ
TH-230	UNFI	1.290	pci/L	-	UNFI	0.250	pci/L	J		NA		
TH-232		NA				NA			FILT	0.160	pci/L	UJ
TH-232	UNFI	0.756	pci/L	J	UNFI	0.130	pci/L	UJ		NA		
TH-TOTAL		NA				NA			FILT	1.470	ug/L	UJ
TH-TOTAL	UNFI	6.890	ug/L	-	UNFI	1.200	ug/L	UJ		NA		
U-234		NA				NA			FILT	1.280	pci/L	-
U-234	UNFI	3.340	pci/L	-	UNFI	1.330	pci/L	-		NA		
U-235/236		NA				NA			FILT	0.100	pci/L	UJ
U-235/236	UNFI	0.212	pci/L	J	UNFI	0.160	pci/L	J		NA		
U-238		NA				NA			FILT	1.310	pci/L	-
U-238	UNFI	3.670	pci/L	-	UNFI	1.230	pci/L	-		NA		
U-TOTAL		NA				NA			FILT	3.100	ug/L	-
U-TOTAL	UNFI	7.620	ug/L	-	UNFI	2.910	ug/L	-		NA		

TABLE D-11A
(Continued)

PHASE II - RADIOLOGICAL PARAMETERS

BORING NUMBER		2042				2042				2935		
SAMPLE NUMBER		110994				110995				114921		
		DUPLICATE				DUPLICATE						
SAMPLING DATE		05/04/93				05/04/93				06/13/93		
RADIOLOGICAL PARAMETERS	FLTD	RESULTS	UNITS	VQ	FLTD	RESULTS	UNITS	VQ	FLTD	RESULTS	UNITS	VQ
CS-137		NA			FILT	13.500	pci/L	UJ	FILT	13.500	pci/L	UJ
CS-137	UNFI	15.400	pci/L	UJ		NA			UNFI	14.600	pci/L	UJ
GROSS ALPHA		NA				NA			FILT	7.440	pci/L	UJ
GROSS ALPHA	UNFI	7.770	pci/L	UJ		NA			UNFI	8.020	pci/L	UJ
GROSS BETA		NA				NA			FILT	5.040	pci/L	UJ
GROSS BETA	UNFI	7.880	pci/L	J		NA			UNFI	4.710	pci/L	UJ
NP-237		NA			FILT	0.360	pci/L	N	FILT	0.400	pci/L	N
NP-237	UNFI	0.360	pci/L	N		NA			UNFI	0.287	pci/L	U
PU-238		NA			FILT	0.140	pci/L	UJ	FILT	0.062	pci/L	J
PU-238	UNFI	0.190	pci/L	J		NA			UNFI	0.050	pci/L	J
PU-239/240		NA			FILT	0.210	pci/L	UJ	FILT	0.170	pci/L	U
PU-239/240	UNFI	0.100	pci/L	UJ		NA			UNFI	0.111	pci/L	U
RA-226		NA			FILT	0.150	pci/L	UJ	FILT	0.364	pci/L	J
RA-226	UNFI	0.270	pci/L	J		NA			UNFI	0.791	pci/L	J
RA-228		NA			FILT	2.310	pci/L	UJ	FILT	2.160	pci/L	U
RA-228	UNFI	2.080	pci/L	UJ		NA			UNFI	2.750	pci/L	UJ
RU-106		NA			FILT	111.000	pci/L	UJ	FILT	136.000	pci/L	UJ
RU-106	UNFI	127.000	pci/L	UJ		NA			UNFI	105.000	pci/L	UJ
SR-90		NA			FILT	1.810	pci/L	U	FILT	0.732	pci/L	UJ
SR-90	UNFI	0.840	pci/L	UJ		NA			UNFI	0.770	pci/L	UJ
TC-99		NA			FILT	11.100	pci/L	UJ	FILT	8.900	pci/L	UJ
TC-99	UNFI	10.700	pci/L	UJ		NA			UNFI	8.700	pci/L	UJ
TH-228		NA			FILT	0.300	pci/L	UJ	FILT	0.046	pci/L	J
TH-228	UNFI	0.190	pci/L	UJ		NA			UNFI	0.211	pci/L	UJ
TH-230		NA			FILT	0.110	pci/L	J	FILT	0.181	pci/L	UJ
TH-230	UNFI	1.030	pci/L	-		NA			UNFI	0.192	pci/L	UJ
TH-232		NA			FILT	0.110	pci/L	J	FILT	0.131	pci/L	UJ
TH-232	UNFI	0.050	pci/L	UJ		NA			UNFI	0.139	pci/L	UJ
TH-TOTAL		NA			FILT	1.010	ug/L	-	FILT	1.210	ug/L	UJ
TH-TOTAL	UNFI	0.450	ug/L	UJ		NA			UNFI	1.280	ug/L	UJ
U-234		NA			FILT	1.360	pci/L	-	FILT	1.250	pci/L	-
U-234	UNFI	1.660	pci/L	-		NA			UNFI	1.410	pci/L	-
U-235/236		NA			FILT	0.150	pci/L	UJ	FILT	0.115	pci/L	J
U-235/236	UNFI	0.140	pci/L	UJ		NA			UNFI	0.076	pci/L	J
U-238		NA			FILT	1.080	pci/L	-	FILT	1.180	pci/L	-
U-238	UNFI	1.430	pci/L	-		NA			UNFI	1.230	pci/L	-
U-TOTAL		NA			FILT	1.360	ug/L	-	FILT	2.590	ug/L	-
U-TOTAL	UNFI	3.390	ug/L	-		NA			UNFI	2.860	ug/L	-

000882

TABLE D-11A
(Continued)

PHASE II - RADIOLOGICAL PARAMETERS

BORING NUMBER	2936				2936				2936			
SAMPLE NUMBER	114788				114789				114917			
	DUPLICATE				DUPLICATE				DUPLICATE			
SAMPLING DATE	06/12/93				06/12/93				06/12/93			
RADIOLOGICAL PARAMETERS	FLTD	RESULTS	UNITS	VQ	FLTD	RESULTS	UNITS	VQ	FLTD	RESULTS	UNITS	VQ
CS-137	UNFI	12.500	pci/L	UJ	UNFI	19.100	pci/L	UJ	UNFI	19.800	pci/L	UJ
GROSS ALPHA	UNFI	8.190	pci/L	UJ	UNFI	7.320	pci/L	UJ	UNFI	7.140	pci/L	UJ
GROSS BETA	UNFI	4.780	pci/L	UJ	UNFI	4.990	pci/L	U	UNFI	4.650	pci/L	UJ
NP-237	UNFI	0.520	pci/L	J	UNFI	0.153	pci/L	U	UNFI	0.295	pci/L	N
PU-238	UNFI	0.046	pci/L	U	UNFI	0.048	pci/L	UJ	UNFI	0.174	pci/L	J
PU-239/240	UNFI	0.232	pci/L	U	UNFI	0.100	pci/L	UJ	UNFI	0.113	pci/L	UJ
RA-226	UNFI	0.184	pci/L	U	UNFI	0.495	pci/L	J	UNFI	0.223	pci/L	J
RA-228	UNFI	2.510	pci/L	UJ	UNFI	2.220	pci/L	UJ	UNFI	1.980	pci/L	UJ
RU-106	UNFI	128.000	pci/L	UJ	UNFI	131.000	pci/L	UJ	UNFI	110.000	pci/L	UJ
SR-90	UNFI	0.727	pci/L	UJ	UNFI	0.751	pci/L	UJ	UNFI	0.787	pci/L	UJ
TC-99	UNFI	9.000	pci/L	UJ	UNFI	9.000	pci/L	UJ	UNFI	10.100	pci/L	UJ
TH-228	UNFI	0.204	pci/L	UJ	UNFI	0.165	pci/L	UJ	UNFI	0.256	pci/L	UJ
TH-230	UNFI	0.119	pci/L	U	UNFI	0.144	pci/L	-	UNFI	0.220	pci/L	J
TH-232	UNFI	0.134	pci/L	UJ	UNFI	0.119	pci/L	UJ	UNFI	0.138	pci/L	UJ
TH-TOTAL	UNFI	1.230	ug/L	U	UNFI	1.090	ug/L	UJ	UNFI	1.270	ug/L	UJ
U-234	UNFI	1.760	pci/L	U	UNFI	1.740	pci/L	U	UNFI	1.800	pci/L	-
U-235/236	UNFI	0.120	pci/L	UJ	UNFI	0.088	pci/L	U	UNFI	0.201	pci/L	J
U-238	UNFI	1.940	pci/L	J	UNFI	1.390	pci/L	J	UNFI	1.290	pci/L	-
U-TOTAL	UNFI	3.640	ug/L	J	UNFI	3.790	ug/L	J	UNFI	3.430	ug/L	-

TABLE D-11A
(Continued)

PHASE II - RADIOLOGICAL PARAMETERS

BORING NUMBER		2936				2939		
SAMPLE NUMBER		114918				114924		
		DUPLICATE						
SAMPLING DATE		06/12/93				06/13/93		
RADIOLOGICAL PARAMETERS	FLTD	RESULTS	UNITS	VQ	FLTD	RESULTS	UNITS	VQ
CS-137		NA			FILT	13.000	pci/L	UJ
CS-137	UNFI	15.300	pci/L	UJ	UNFI	13.300	pci/L	UJ
GROSS ALPHA		NA			FILT	8.190	pci/L	UJ
GROSS ALPHA	UNFI	5.350	pci/L	UJ	UNFI	7.460	pci/L	UJ
GROSS BETA		NA			FILT	6.180	pci/L	J
GROSS BETA	UNFI	5.610	pci/L	J	UNFI	5.080	pci/L	J
NP-237		NA			FILT	0.376	pci/L	N
NP-237	UNFI	0.317	pci/L	N	UNFI	0.122	pci/L	R
PU-238		NA			FILT	0.054	pci/L	UJ
PU-238	UNFI	0.135	pci/L	UJ	UNFI	0.059	pci/L	UJ
PU-239/240		NA			FILT	0.217	pci/L	U
PU-239/240	UNFI	0.135	pci/L	UJ	UNFI	0.148	pci/L	UJ
RA-226		NA			FILT	0.199	pci/L	UJ
RA-226	UNFI	0.443	pci/L	J	UNFI	0.225	pci/L	UJ
RA-228		NA			FILT	2.770	pci/L	UJ
RA-228	UNFI	1.960	pci/L	J	UNFI	2.730	pci/L	UJ
RU-106		NA			FILT	137.000	pci/L	UJ
RU-106	UNFI	137.000	pci/L	UJ	UNFI	130.000	pci/L	UJ
SR-90		NA			FILT	0.728	pci/L	UJ
SR-90	UNFI	0.804	pci/L	UJ	UNFI	0.754	pci/L	UJ
TC-99		NA			FILT	8.800	pci/L	UJ
TC-99	UNFI	9.600	pci/L	UJ	UNFI	9.000	pci/L	UJ
TH-228		NA			FILT	0.251	pci/L	UJ
TH-228	UNFI	0.107	pci/L	J	UNFI	0.186	pci/L	UJ
TH-230		NA			FILT	0.173	pci/L	J
TH-230	UNFI	0.224	pci/L	UJ	UNFI	0.186	pci/L	UJ
TH-232		NA			FILT	0.156	pci/L	UJ
TH-232	UNFI	0.244	pci/L	UJ	UNFI	0.164	pci/L	UJ
TH-TOTAL		NA			FILT	1.440	ug/L	UJ
TH-TOTAL	UNFI	2.240	ug/L	UJ	UNFI	1.510	ug/L	UJ
U-234		NA			FILT	0.547	pci/L	J
U-234	UNFI	1.800	pci/L	-	UNFI	0.129	pci/L	UJ
U-235/236		NA			FILT	0.072	pci/L	J
U-235/236	UNFI	0.167	pci/L	J	UNFI	0.046	pci/L	UJ
U-238		NA			FILT	0.592	pci/L	J
U-238	UNFI	1.230	pci/L	-	UNFI	0.579	pci/L	J
U-TOTAL		NA			FILT	1.600	ug/L	-
U-TOTAL	UNFI	3.490	ug/L	-	UNFI	1.630	ug/L	-

TABLE D-11A
(Continued)

PHASE II - CHEMICAL PARAMETERS

BORING NUMBER	1039					1041					1041				
SAMPLE NUMBER	111990					116220					116221				
SAMPLING DATE	04/28/93					05/05/93					05/05/93				
CHEMICAL PARAMETERS	FLTD	RESULTS	UNITS	L	VQ	FLTD	RESULTS	UNITS	L	VQ	FLTD	RESULTS	UNITS	L	VQ
Inorganics															
Aluminum	FILT	0.071	mg/L	C	U		NA				FILT	0.087	mg/L	C	U
Aluminum		NA				UNFI	8.600	mg/L	D	-		NA			
Antimony	FILT	0.001	mg/L	C	U		NA				FILT	0.004	mg/L	C	UJ
Antimony		NA				UNFI	0.003	mg/L	D	UJ		NA			
Arsenic	FILT	0.001	mg/L	C	U		NA				FILT	0.001	mg/L	C	U
Arsenic		NA				UNFI	0.004	mg/L	D	-		NA			
Barium	FILT	0.126	mg/L	C	-		NA				FILT	0.097	mg/L	C	-
Barium		NA				UNFI	0.108	mg/L	D	-		NA			
Beryllium	FILT	0.003	mg/L	C	U		NA				FILT	0.001	mg/L	C	U
Beryllium		NA				UNFI	0.002	mg/L	D	-		NA			
Cadmium	FILT	0.002	mg/L	C	U		NA				FILT	0.002	mg/L	C	U
Cadmium		NA				UNFI	0.002	mg/L	D	U		NA			
Calcium	FILT	118.000	mg/L	C	-		NA				FILT	127.000	mg/L	C	-
Calcium		NA				UNFI	170.000	mg/L	D	-		NA			
Chromium	FILT	0.004	mg/L	C	U		NA				FILT	0.004	mg/L	C	U
Chromium		NA				UNFI	0.032	mg/L	D	-		NA			
Cobalt	FILT	0.003	mg/L	C	U		NA				FILT	0.003	mg/L	C	U
Cobalt		NA				UNFI	0.009	mg/L	D	-		NA			
Copper	FILT	0.004	mg/L	C	U		NA				FILT	0.002	mg/L	C	U
Copper		NA				UNFI	0.020	mg/L	D	U		NA			
Cyanide		NA					NA				FILT	0.001	mg/L	C	R
Cyanide	UNFI	0.001	mg/L	C	U	UNFI	0.001	mg/L	D	U		NA			
Iron	FILT	0.509	mg/L	C	-		NA				FILT	0.032	mg/L	C	U
Iron		NA				UNFI	17.600	mg/L	D	-		NA			
Lead	FILT	0.001	mg/L	C	U		NA				FILT	0.001	mg/L	C	U
Lead		NA				UNFI	0.010	mg/L	D	-		NA			
Magnesium	FILT	44.900	mg/L	C	-		NA				FILT	55.500	mg/L	C	-
Magnesium		NA				UNFI	65.100	mg/L	D	-		NA			
Manganese	FILT	0.418	mg/L	C	-		NA				FILT	0.176	mg/L	C	-
Manganese		NA				UNFI	1.210	mg/L	D	-		NA			
Mercury	FILT	0.000	mg/L	C	U		NA				FILT	0.000	mg/L	C	U
Mercury		NA				UNFI	0.000	mg/L	D	U		NA			
Molybdenum	FILT	0.005	mg/L	C	-		NA				FILT	0.007	mg/L	C	U
Molybdenum		NA				UNFI	0.006	mg/L	D	U		NA			
Nickel	FILT	0.004	mg/L	C	-		NA				FILT	0.012	mg/L	C	-
Nickel		NA				UNFI	0.029	mg/L	D	-		NA			
Potassium	FILT	0.654	mg/L	C	U		NA				FILT	0.434	mg/L	C	U
Potassium		NA				UNFI	2.990	mg/L	D	-		NA			
Selenium	FILT	0.001	mg/L	C	U		NA				FILT	0.001	mg/L	C	U
Selenium		NA				UNFI	0.001	mg/L	D	UJ		NA			
Silicon	FILT	5.680	mg/L	C	-		NA				FILT	5.370	mg/L	C	-
Silicon		NA				UNFI	17.900	mg/L	D	-		NA			

TABLE D-11A
(Continued)

PHASE II - CHEMICAL PARAMETERS

BORING NUMBER		1039					1041					1041			
SAMPLE NUMBER		111990					116220					116221			
SAMPLING DATE		04/28/93					05/05/93					05/05/93			
CHEMICAL PARAMETERS	FLTD	RESULTS	UNITS	L	VQ	FLTD	RESULTS	UNITS	L	VQ	FLTD	RESULTS	UNITS	L	VQ
Inorganics															
Silver	FILT	0.002	mg/L	C	U		NA				FILT	0.002	mg/L	C	U
Silver		NA				UNFI	0.002	mg/L	D	U		NA			
Sodium	FILT	157.000	mg/L	C	-		NA				FILT	29.800	mg/L	C	-
Sodium		NA				UNFI	21.500	mg/L	D	-		NA			
Thallium	FILT	0.001	mg/L	C	U		NA				FILT	0.001	mg/L	C	U
Thallium		NA				UNFI	0.001	mg/L	D	U		NA			
Vanadium	FILT	0.012	mg/L	C	U		NA				FILT	0.008	mg/L	C	U
Vanadium		NA				UNFI	0.027	mg/L	D	-		NA			
Zinc	FILT	0.004	mg/L	C	-		NA				FILT	0.002	mg/L	C	U
Zinc		NA				UNFI	0.064	mg/L	D	-		NA			
Volatile Organics															
1,1,1-Trichloroethane	UNFI	10.000	ug/L	C	U	UNFI	10.000	ug/L	D	U		NA			
1,1,2,2-Tetrachloroethane	UNFI	10.000	ug/L	C	U	UNFI	10.000	ug/L	D	U		NA			
1,1,2-Trichloroethane	UNFI	10.000	ug/L	C	U	UNFI	10.000	ug/L	D	U		NA			
1,1-Dichloroethane	UNFI	10.000	ug/L	C	U	UNFI	10.000	ug/L	D	U		NA			
1,1-Dichloroethene	UNFI	10.000	ug/L	C	U	UNFI	10.000	ug/L	D	U		NA			
1,2-Dichloroethane	UNFI	10.000	ug/L	C	U	UNFI	10.000	ug/L	D	U		NA			
1,2-Dichloroethene	UNFI	10.000	ug/L	C	U	UNFI	10.000	ug/L	D	U		NA			
1,2-Dichloropropane	UNFI	10.000	ug/L	C	U	UNFI	10.000	ug/L	D	U		NA			
2-Butanone	UNFI	10.000	ug/L	C	U	UNFI	10.000	ug/L	D	U		NA			
2-Hexanone	UNFI	10.000	ug/L	C	UJ	UNFI	10.000	ug/L	D	U		NA			
4-Methyl-2-pentanone	UNFI	10.000	ug/L	C	U	UNFI	10.000	ug/L	D	U		NA			
Acetone	UNFI	10.000	ug/L	C	U	UNFI	10.000	ug/L	D	U		NA			
Benzene	UNFI	10.000	ug/L	C	U	UNFI	10.000	ug/L	D	U		NA			
Bromodichloromethane	UNFI	10.000	ug/L	C	U	UNFI	10.000	ug/L	D	U		NA			
Bromoform	UNFI	10.000	ug/L	C	U	UNFI	10.000	ug/L	D	U		NA			
Bromomethane	UNFI	10.000	ug/L	C	U	UNFI	10.000	ug/L	D	U		NA			
Carbon Tetrachloride	UNFI	10.000	ug/L	C	U	UNFI	10.000	ug/L	D	U		NA			
Carbon disulfide	UNFI	10.000	ug/L	C	U	UNFI	10.000	ug/L	D	UJ		NA			
Chlorobenzene	UNFI	10.000	ug/L	C	U	UNFI	10.000	ug/L	D	U		NA			
Chloroethane	UNFI	10.000	ug/L	C	U	UNFI	10.000	ug/L	D	UJ		NA			
Chloroform	UNFI	10.000	ug/L	C	U	UNFI	10.000	ug/L	D	U		NA			
Chloromethane	UNFI	10.000	ug/L	C	UJ	UNFI	10.000	ug/L	D	UJ		NA			
Dibromochloromethane	UNFI	10.000	ug/L	C	U	UNFI	10.000	ug/L	D	U		NA			
Ethylbenzene	UNFI	10.000	ug/L	C	U	UNFI	10.000	ug/L	D	U		NA			
Methylene chloride	UNFI	10.000	ug/L	C	UJ	UNFI	10.000	ug/L	D	UJ		NA			
Styrene	UNFI	10.000	ug/L	C	U	UNFI	10.000	ug/L	D	U		NA			
Tetrachloroethene	UNFI	10.000	ug/L	C	U	UNFI	10.000	ug/L	D	U		NA			
Toluene	UNFI	10.000	ug/L	C	U	UNFI	10.000	ug/L	D	U		NA			
Trichloroethene	UNFI	10.000	ug/L	C	U	UNFI	10.000	ug/L	D	U		NA			

000886

TABLE D-11A
(Continued)

PHASE II - CHEMICAL PARAMETERS

BORING NUMBER		1039					1041					1041			
SAMPLE NUMBER		111990					116220					116221			
SAMPLING DATE		04/28/93					05/05/93					05/05/93			
CHEMICAL PARAMETERS	FLTD	RESULTS	UNITS	L	VQ	FLTD	RESULTS	UNITS	L	VQ	FLTD	RESULTS	UNITS	L	VQ
Volatile Organics															
Vinyl Acetate	UNFI	10.000	ug/L	C	U	UNFI	10.000	ug/L	D	U		NA			
Vinyl chloride	UNFI	10.000	ug/L	C	UJ	UNFI	10.000	ug/L	D	U		NA			
Xylenes, Total	UNFI	10.000	ug/L	C	U	UNFI	10.000	ug/L	D	U		NA			
cis-1,3-Dichloropropene	UNFI	10.000	ug/L	C	U	UNFI	10.000	ug/L	D	U		NA			
trans-1,3-Dichloropropene	UNFI	10.000	ug/L	C	U	UNFI	10.000	ug/L	D	U		NA			
Semivolatile Organics															
1,2,4-Trichlorobenzene	UNFI	10.000	ug/L	C	U	UNFI	10.000	ug/L	D	U		NA			
1,2-Dichlorobenzene	UNFI	10.000	ug/L	C	U	UNFI	10.000	ug/L	D	U		NA			
1,3-Dichlorobenzene	UNFI	10.000	ug/L	C	U	UNFI	10.000	ug/L	D	U		NA			
1,4-Dichlorobenzene	UNFI	10.000	ug/L	C	U	UNFI	10.000	ug/L	D	U		NA			
2,4,5-Trichlorophenol	UNFI	25.000	ug/L	C	U	UNFI	25.000	ug/L	D	U		NA			
2,4,6-Trichlorophenol	UNFI	10.000	ug/L	C	U	UNFI	10.000	ug/L	D	U		NA			
2,4-Dichlorophenol	UNFI	10.000	ug/L	C	U	UNFI	10.000	ug/L	D	U		NA			
2,4-Dimethylphenol	UNFI	10.000	ug/L	C	U	UNFI	10.000	ug/L	D	U		NA			
2,4-Dinitrophenol	UNFI	25.000	ug/L	C	U	UNFI	50.000	ug/L	D	R		NA			
2,4-Dinitrotoluene	UNFI	10.000	ug/L	C	U	UNFI	10.000	ug/L	D	U		NA			
2,6-Dinitrotoluene	UNFI	10.000	ug/L	C	U	UNFI	10.000	ug/L	D	U		NA			
2-Chloronaphthalene	UNFI	10.000	ug/L	C	U	UNFI	10.000	ug/L	D	U		NA			
2-Chlorophenol	UNFI	10.000	ug/L	C	U	UNFI	10.000	ug/L	D	U		NA			
2-Methylnaphthalene	UNFI	10.000	ug/L	C	U	UNFI	10.000	ug/L	D	U		NA			
2-Methylphenol	UNFI	10.000	ug/L	C	U	UNFI	10.000	ug/L	D	U		NA			
2-Nitroaniline	UNFI	25.000	ug/L	C	U	UNFI	25.000	ug/L	D	U		NA			
2-Nitrophenol	UNFI	10.000	ug/L	C	U	UNFI	10.000	ug/L	D	U		NA			
3,3'-Dichlorobenzidine	UNFI	10.000	ug/L	C	UJ	UNFI	10.000	ug/L	D	U		NA			
3-Nitroaniline	UNFI	25.000	ug/L	C	UJ	UNFI	25.000	ug/L	D	U		NA			
4,6-Dinitro-2-methylphenol	UNFI	25.000	ug/L	C	U	UNFI	25.000	ug/L	D	UJ		NA			
4-Bromophenyl phenyl ether	UNFI	10.000	ug/L	C	U	UNFI	10.000	ug/L	D	U		NA			
4-Chloro-3-methylphenol	UNFI	10.000	ug/L	C	U	UNFI	10.000	ug/L	D	U		NA			
4-Chlorophenylphenyl ether	UNFI	10.000	ug/L	C	U	UNFI	10.000	ug/L	D	U		NA			
4-Methylphenol	UNFI	10.000	ug/L	C	U	UNFI	10.000	ug/L	D	U		NA			
4-Nitroaniline	UNFI	25.000	ug/L	C	R	UNFI	25.000	ug/L	D	U		NA			
4-Nitrophenol	UNFI	25.000	ug/L	C	R	UNFI	25.000	ug/L	D	UJ		NA			
Acenaphthene	UNFI	10.000	ug/L	C	U	UNFI	10.000	ug/L	D	U		NA			
Acenaphthylene	UNFI	10.000	ug/L	C	U	UNFI	10.000	ug/L	D	U		NA			
Anthracene	UNFI	10.000	ug/L	C	U	UNFI	10.000	ug/L	D	U		NA			
Benzo(a)anthracene	UNFI	10.000	ug/L	C	U	UNFI	10.000	ug/L	D	U		NA			
Benzo(a)pyrene	UNFI	10.000	ug/L	C	U	UNFI	10.000	ug/L	D	U		NA			
Benzo(b)fluoranthene	UNFI	10.000	ug/L	C	U	UNFI	10.000	ug/L	D	U		NA			
Benzo(g,h,i)perylene	UNFI	10.000	ug/L	C	U	UNFI	10.000	ug/L	D	U		NA			
Benzo(k)fluoranthene	UNFI	10.000	ug/L	C	UJ	UNFI	10.000	ug/L	D	U		NA			

TABLE D-11A
(Continued)

PHASE II - CHEMICAL PARAMETERS

BORING NUMBER		1039					1041					1041			
SAMPLE NUMBER		111990					116220					116221			
SAMPLING DATE		04/28/93					05/05/93					05/05/93			
CHEMICAL PARAMETERS	FLTD	RESULTS	UNITS	L	VQ	FLTD	RESULTS	UNITS	L	VQ	FLTD	RESULTS	UNITS	L	VQ
Semivolatile Organics															
Benzoic acid	UNFI	50.000	ug/L	C	U	UNFI	50.000	ug/L	D	R		NA			
Benzyl alcohol	UNFI	10.000	ug/L	C	U	UNFI	10.000	ug/L	D	UJ		NA			
Butyl benzyl phthalate	UNFI	10.000	ug/L	C	U	UNFI	10.000	ug/L	D	U		NA			
Carbazole	UNFI	10.000	ug/L	C	U	UNFI	10.000	ug/L	D	U		NA			
Chrysene	UNFI	10.000	ug/L	C	U	UNFI	10.000	ug/L	D	U		NA			
Di-n-butyl phthalate	UNFI	10.000	ug/L	C	UJ	UNFI	10.000	ug/L	D	U		NA			
Di-n-octyl phthalate	UNFI	10.000	ug/L	C	UJ	UNFI	10.000	ug/L	D	R		NA			
Dibenzo(a,h)anthracene	UNFI	10.000	ug/L	C	U	UNFI	10.000	ug/L	D	UJ		NA			
Dibenzofuran	UNFI	10.000	ug/L	C	U	UNFI	10.000	ug/L	D	U		NA			
Diethyl phthalate	UNFI	10.000	ug/L	C	UJ	UNFI	10.000	ug/L	D	U		NA			
Dimethyl phthalate	UNFI	10.000	ug/L	C	U	UNFI	10.000	ug/L	D	U		NA			
Fluoranthene	UNFI	10.000	ug/L	C	U	UNFI	10.000	ug/L	D	U		NA			
Fluorene	UNFI	10.000	ug/L	C	U	UNFI	10.000	ug/L	D	U		NA			
Hexachlorobenzene	UNFI	10.000	ug/L	C	U	UNFI	10.000	ug/L	D	U		NA			
Hexachlorobutadiene	UNFI	10.000	ug/L	C	UJ	UNFI	10.000	ug/L	D	U		NA			
Hexachlorocyclopentadiene	UNFI	10.000	ug/L	C	U	UNFI	10.000	ug/L	D	U		NA			
Hexachloroethane	UNFI	10.000	ug/L	C	U	UNFI	10.000	ug/L	D	U		NA			
Indeno(1,2,3-cd)pyrene	UNFI	10.000	ug/L	C	U	UNFI	10.000	ug/L	D	U		NA			
Isophorone	UNFI	10.000	ug/L	C	U	UNFI	10.000	ug/L	D	U		NA			
N-Nitroso-di-n-propylamine	UNFI	10.000	ug/L	C	U	UNFI	10.000	ug/L	D	U		NA			
N-Nitrosodiphenylamine	UNFI	10.000	ug/L	C	U	UNFI	10.000	ug/L	D	U		NA			
Naphthalene	UNFI	10.000	ug/L	C	U	UNFI	10.000	ug/L	D	U		NA			
Nitrobenzene	UNFI	10.000	ug/L	C	U	UNFI	10.000	ug/L	D	U		NA			
Pentachlorophenol	UNFI	25.000	ug/L	C	U	UNFI	25.000	ug/L	D	U		NA			
Phenanthrene	UNFI	10.000	ug/L	C	U	UNFI	10.000	ug/L	D	U		NA			
Phenol	UNFI	10.000	ug/L	C	U	UNFI	10.000	ug/L	D	U		NA			
Pyrene	UNFI	10.000	ug/L	C	U	UNFI	10.000	ug/L	D	U		NA			
bis(2-Chloroethoxy)methane	UNFI	10.000	ug/L	C	U	UNFI	10.000	ug/L	D	U		NA			
bis(2-Chloroethyl)ether	UNFI	10.000	ug/L	C	U	UNFI	10.000	ug/L	D	U		NA			
bis(2-Chloroisopropyl) ether	UNFI	10.000	ug/L	C	UJ	UNFI	10.000	ug/L	D	U		NA			
bis(2-Ethylhexyl) phthalate	UNFI	10.000	ug/L	C	U	UNFI	2.000	ug/L	D	J		NA			
p-Chloroaniline	UNFI	10.000	ug/L	C	R	UNFI	10.000	ug/L	D	U		NA			
Pesticide Organics/PCBs															
4,4'-DDD	UNFI	0.100	ug/L	C	U	UNFI	0.100	ug/L	D	U		NA			
4,4'-DDE	UNFI	0.100	ug/L	C	U	UNFI	0.100	ug/L	D	U		NA			
4,4'-DDT	UNFI	0.100	ug/L	C	U	UNFI	0.100	ug/L	D	UJ		NA			
Aldrin	UNFI	0.050	ug/L	C	U	UNFI	0.050	ug/L	D	U		NA			
Aroclor-1016	UNFI	1.000	ug/L	C	U	UNFI	1.000	ug/L	D	U		NA			
Aroclor-1221	UNFI	2.000	ug/L	C	U	UNFI	2.000	ug/L	D	U		NA			
Aroclor-1232	UNFI	1.000	ug/L	C	U	UNFI	1.000	ug/L	D	U		NA			

TABLE D-11A
(Continued)

PHASE II - CHEMICAL PARAMETERS

BORING NUMBER		1039					1041					1041			
SAMPLE NUMBER		111990					116220					116221			
SAMPLING DATE		04/28/93					05/05/93					05/05/93			
CHEMICAL PARAMETERS	FLTD	RESULTS	UNITS	L	VQ	FLTD	RESULTS	UNITS	L	VQ	FLTD	RESULTS	UNITS	L	VQ
Pesticide Organics/PCBs															
Aroclor-1242	UNFI	1.000	ug/L	C	U	UNFI	1.000	ug/L	D	U		NA			
Aroclor-1248	UNFI	1.000	ug/L	C	U	UNFI	1.000	ug/L	D	U		NA			
Aroclor-1254	UNFI	1.000	ug/L	C	U	UNFI	1.000	ug/L	D	U		NA			
Aroclor-1260	UNFI	1.000	ug/L	C	U	UNFI	1.000	ug/L	D	U		NA			
Dieldrin	UNFI	0.100	ug/L	C	U	UNFI	0.100	ug/L	D	U		NA			
Endosulfan II	UNFI	0.100	ug/L	C	U	UNFI	0.100	ug/L	D	U		NA			
Endosulfan sulfate	UNFI	0.100	ug/L	C	U	UNFI	0.100	ug/L	D	U		NA			
Endosulfan-I	UNFI	0.050	ug/L	C	U	UNFI	0.050	ug/L	D	U		NA			
Endrin	UNFI	0.100	ug/L	C	U	UNFI	0.100	ug/L	D	U		NA			
Endrin aldehyde	UNFI	0.100	ug/L	C	U	UNFI	0.100	ug/L	D	U		NA			
Endrin ketone	UNFI	0.100	ug/L	C	U	UNFI	0.100	ug/L	D	U		NA			
Heptachlor	UNFI	0.050	ug/L	C	U	UNFI	0.050	ug/L	D	U		NA			
Heptachlor epoxide	UNFI	0.050	ug/L	C	U	UNFI	0.050	ug/L	D	U		NA			
Methoxychlor	UNFI	0.500	ug/L	C	U	UNFI	0.500	ug/L	D	U		NA			
Toxaphene	UNFI	5.000	ug/L	C	U	UNFI	5.000	ug/L	D	U		NA			
alpha-BHC	UNFI	0.050	ug/L	C	U	UNFI	0.050	ug/L	D	UJ		NA			
alpha-Chlordane	UNFI	0.050	ug/L	C	U	UNFI	0.050	ug/L	D	U		NA			
beta-BHC	UNFI	0.050	ug/L	C	U	UNFI	0.050	ug/L	D	U		NA			
delta-BHC	UNFI	0.050	ug/L	C	U	UNFI	0.050	ug/L	D	UJ		NA			
gamma-BHC (Lindane)	UNFI	0.050	ug/L	C	U	UNFI	0.050	ug/L	D	UJ		NA			
gamma-Chlordane	UNFI	0.050	ug/L	C	U	UNFI	0.050	ug/L	D	U		NA			
General Chemistry															
Alkalinity		NA				UNFI	437.900	mg/L	B	-		NA			
Alkalinity as CaCO3	UNFI	250.000	mg/L	B	-		NA					NA			
Ammonia	UNFI	0.100	mg/L	B	U	UNFI	0.100	mg/L	B	U		NA			
Chloride	UNFI	360.230	mg/L	B	-	UNFI	44.070	mg/L	B	-		NA			
Fluoride	UNFI	0.330	mg/L	B	-	UNFI	0.230	mg/L	B	-		NA			
Nitrate	UNFI	0.100	mg/L	B	R	UNFI	0.100	mg/L	B	R		NA			
Phenols	UNFI	0.010	mg/L	B	U	UNFI	0.010	mg/L	B	U		NA			
Phosphorus	UNFI	0.040	mg/L	B	-		NA					NA			
Sulfate	UNFI	123.400	mg/L	B	-	UNFI	72.100	mg/L	B	-		NA			
Sulfide	UNFI	0.500	mg/L	B	U	UNFI	0.500	mg/L	B	U		NA			
Total Kjeldahl Nitrogen	UNFI	0.130	mg/L	B	-	UNFI	0.180	mg/L	B	-		NA			
Total Organic Carbon	UNFI	1.220	mg/L	B	-	UNFI	1.040	mg/L	B	-		NA			
Total Organic Halides	UNFI	0.027	mg/L	B	-	UNFI	0.030	mg/L	B	J		NA			
Total Organic Nitrogen	UNFI	0.130	mg/L	B	-	UNFI	0.180	mg/L	B	-		NA			
Total Phosphorous		NA				UNFI	0.220	mg/L	B	-		NA			

TABLE D-11A
(Continued)

PHASE II - CHEMICAL PARAMETERS

BORING NUMBER		1042					1934					1934			
SAMPLE NUMBER		110889					114620					114622			
												DUPLICATE			
SAMPLING DATE		04/22/93					05/13/93					05/13/93			
CHEMICAL PARAMETERS	FLTD	RESULTS	UNITS	L	VQ	FLTD	RESULTS	UNITS	L	VQ	FLTD	RESULTS	UNITS	L	VQ
Inorganics															
Aluminum	FILT	0.252	mg/L	C	U		NA					NA			
Aluminum		NA				UNFI	0.090	mg/L	D	-	UNFI	49.800	mg/L	C	-
Antimony	FILT	0.005	mg/L	C	U		NA					NA			
Antimony		NA				UNFI	0.001	mg/L	D	UJ	UNFI	0.003	mg/L	C	UJ
Arsenic	FILT	0.002	mg/L	C	UJ		NA					NA			
Arsenic		NA				UNFI	0.001	mg/L	D	UJ	UNFI	0.014	mg/L	C	J
Barium	FILT	0.078	mg/L	C	-		NA					NA			
Barium		NA				UNFI	0.147	mg/L	D	-	UNFI	0.444	mg/L	C	-
Beryllium	FILT	0.002	mg/L	C	U		NA					NA			
Beryllium		NA				UNFI	0.001	mg/L	D	U	UNFI	0.007	mg/L	C	-
Cadmium	FILT	0.005	mg/L	C	U		NA					NA			
Cadmium		NA				UNFI	0.002	mg/L	D	U	UNFI	0.006	mg/L	C	-
Calcium	FILT	138.000	mg/L	C	J		NA					NA			
Calcium		NA				UNFI	96.000	mg/L	D	-	UNFI	781.000	mg/L	C	-
Chromium	FILT	0.010	mg/L	C	U		NA					NA			
Chromium		NA				UNFI	0.004	mg/L	D	U	UNFI	0.064	mg/L	C	-
Cobalt	FILT	0.010	mg/L	C	U		NA					NA			
Cobalt		NA				UNFI	0.003	mg/L	D	U	UNFI	0.048	mg/L	C	-
Copper	FILT	0.010	mg/L	C	U		NA					NA			
Copper		NA				UNFI	0.002	mg/L	D	U	UNFI	0.113	mg/L	C	-
Cyanide	UNFI	0.002	mg/L	C	U	UNFI	0.001	mg/L	D	U		NA			
Iron	FILT	0.020	mg/L	C	U		NA					NA			
Iron		NA				UNFI	0.040	mg/L	D	-	UNFI	94.800	mg/L	C	-
Lead	FILT	0.002	mg/L	C	UJ		NA					NA			
Lead		NA				UNFI	0.001	mg/L	D	U	UNFI	0.051	mg/L	C	-
Magnesium	FILT	56.600	mg/L	C	J		NA					NA			
Magnesium		NA				UNFI	69.100	mg/L	D	-	UNFI	325.000	mg/L	C	-
Manganese	FILT	0.032	mg/L	C	-		NA					NA			
Manganese		NA				UNFI	0.099	mg/L	D	-	UNFI	3.060	mg/L	C	-
Mercury	FILT	0.000	mg/L	C	U		NA					NA			
Mercury		NA				UNFI	0.000	mg/L	D	U	UNFI	0.000	mg/L	C	U
Molybdenum	FILT	0.020	mg/L	C	U		NA					NA			
Molybdenum		NA				UNFI	0.006	mg/L	D	-	UNFI	0.010	mg/L	C	-
Nickel	FILT	0.020	mg/L	C	U		NA					NA			
Nickel		NA				UNFI	0.003	mg/L	D	U	UNFI	0.108	mg/L	C	-
Potassium	FILT	0.753	mg/L	C	-		NA					NA			
Potassium		NA				UNFI	0.837	mg/L	D	-	UNFI	12.000	mg/L	C	-
Selenium	FILT	0.002	mg/L	C	U		NA					NA			
Selenium		NA				UNFI	0.001	mg/L	D	UJ	UNFI	0.001	mg/L	C	UJ
Silicon	FILT	5.280	mg/L	C	-		NA					NA			
Silicon		NA				UNFI	6.030	mg/L	D	-	UNFI	71.300	mg/L	C	-
Silver	FILT	0.010	mg/L	C	U		NA					NA			

000890

TABLE D-11A
(Continued)

PHASE II - CHEMICAL PARAMETERS

BORING NUMBER		1042				1934				1934			
SAMPLE NUMBER		110889				114620				114622			
										DUPLICATE			
SAMPLING DATE		04/22/93				05/13/93				05/13/93			
CHEMICAL PARAMETERS	FLTD	RESULTS	UNITS	L	VQ	FLTD	RESULTS	UNITS	L	VQ	FLTD	RESULTS	UNITS	L	VQ
Inorganics															
Silver		NA				UNFI	0.002	mg/L	D	U	UNFI	0.002	mg/L	C	U
Sodium	FILT	20.800	mg/L	C	J		NA					NA			
Sodium		NA				UNFI	12.300	mg/L	D	-	UNFI	13.600	mg/L	C	-
Thallium	FILT	0.002	mg/L	C	UJ		NA					NA			
Thallium		NA				UNFI	0.001	mg/L	D	UJ	UNFI	0.001	mg/L	C	UJ
Vanadium	FILT	0.010	mg/L	C	U		NA					NA			
Vanadium		NA				UNFI	0.008	mg/L	D	U	UNFI	0.125	mg/L	C	-
Zinc	FILT	0.005	mg/L	C	U		NA					NA			
Zinc		NA				UNFI	0.003	mg/L	D	U	UNFI	0.284	mg/L	C	-
Volatile Organics															
1,1,1-Trichloroethane	UNFI	10.000	ug/L	C	U	UNFI	10.000	ug/L	D	U		NA			
1,1,2,2-Tetrachloroethane	UNFI	10.000	ug/L	C	U	UNFI	10.000	ug/L	D	U		NA			
1,1,2-Trichloroethane	UNFI	10.000	ug/L	C	U	UNFI	10.000	ug/L	D	U		NA			
1,1-Dichloroethane	UNFI	10.000	ug/L	C	U	UNFI	10.000	ug/L	D	U		NA			
1,1-Dichloroethene	UNFI	10.000	ug/L	C	U	UNFI	10.000	ug/L	D	U		NA			
1,2-Dichloroethane	UNFI	10.000	ug/L	C	U	UNFI	10.000	ug/L	D	U		NA			
1,2-Dichloroethene	UNFI	10.000	ug/L	C	U	UNFI	10.000	ug/L	D	U		NA			
1,2-Dichloropropane	UNFI	10.000	ug/L	C	U	UNFI	10.000	ug/L	D	U		NA			
2-Butanone	UNFI	10.000	ug/L	C	U	UNFI	10.000	ug/L	D	UJ		NA			
2-Hexanone	UNFI	10.000	ug/L	C	U	UNFI	10.000	ug/L	D	UJ		NA			
4-Methyl-2-pentanone	UNFI	10.000	ug/L	C	U	UNFI	10.000	ug/L	D	U		NA			
Acetone	UNFI	10.000	ug/L	C	U	UNFI	4.000	ug/L	D	R		NA			
Benzene	UNFI	10.000	ug/L	C	U	UNFI	10.000	ug/L	D	U		NA			
Bromodichloromethane	UNFI	10.000	ug/L	C	U	UNFI	10.000	ug/L	D	U		NA			
Bromoform	UNFI	10.000	ug/L	C	U	UNFI	10.000	ug/L	D	U		NA			
Bromomethane	UNFI	10.000	ug/L	C	U	UNFI	10.000	ug/L	D	U		NA			
Carbon Tetrachloride	UNFI	10.000	ug/L	C	U	UNFI	10.000	ug/L	D	U		NA			
Carbon disulfide	UNFI	10.000	ug/L	C	U	UNFI	10.000	ug/L	D	U		NA			
Chlorobenzene	UNFI	10.000	ug/L	C	U	UNFI	10.000	ug/L	D	U		NA			
Chloroethane	UNFI	10.000	ug/L	C	U	UNFI	10.000	ug/L	D	U		NA			
Chloroform	UNFI	10.000	ug/L	C	U	UNFI	10.000	ug/L	D	U		NA			
Chloromethane	UNFI	10.000	ug/L	C	UJ	UNFI	10.000	ug/L	D	U		NA			
Dibromochloromethane	UNFI	10.000	ug/L	C	U	UNFI	10.000	ug/L	D	U		NA			
Ethylbenzene	UNFI	10.000	ug/L	C	U	UNFI	10.000	ug/L	D	U		NA			
Methylene chloride	UNFI	10.000	ug/L	C	UJ	UNFI	10.000	ug/L	D	U		NA			
Styrene	UNFI	10.000	ug/L	C	U	UNFI	10.000	ug/L	D	U		NA			
Tetrachloroethene	UNFI	10.000	ug/L	C	U	UNFI	10.000	ug/L	D	U		NA			
Toluene	UNFI	10.000	ug/L	C	U	UNFI	10.000	ug/L	D	U		NA			
Trichloroethene	UNFI	10.000	ug/L	C	U	UNFI	10.000	ug/L	D	U		NA			
Vinyl Acetate	UNFI	10.000	ug/L	C	U		NA					NA			

TABLE D-11A
(Continued)

PHASE II - CHEMICAL PARAMETERS

BORING NUMBER		1042					1934					1934		
SAMPLE NUMBER		110889					114620					114622 DUPLICATE		
SAMPLING DATE		04/22/93					05/13/93					05/13/93		
CHEMICAL PARAMETERS	FLTD	RESULTS	UNITS	L	VQ	FLTD	RESULTS	UNITS	L	VQ	FLTD	RESULTS	UNITS	L	VQ
Volatile Organics															
Vinyl chloride	UNFI	10.000	ug/L	C	U	UNFI	10.000	ug/L	D	U		NA			
Xylenes, Total	UNFI	10.000	ug/L	C	U	UNFI	10.000	ug/L	D	U		NA			
cis-1,3-Dichloropropene	UNFI	10.000	ug/L	C	U	UNFI	10.000	ug/L	D	U		NA			
trans-1,3-Dichloropropene	UNFI	10.000	ug/L	C	U	UNFI	10.000	ug/L	D	U		NA			
Semivolatile Organics															
1,2,4-Trichlorobenzene	UNFI	10.000	ug/L	C	U	UNFI	10.000	ug/L	D	U		NA			
1,2-Dichlorobenzene	UNFI	10.000	ug/L	C	U	UNFI	10.000	ug/L	D	U		NA			
1,3-Dichlorobenzene	UNFI	10.000	ug/L	C	U	UNFI	10.000	ug/L	D	U		NA			
1,4-Dichlorobenzene	UNFI	10.000	ug/L	C	U	UNFI	10.000	ug/L	D	U		NA			
2,4,5-Trichlorophenol	UNFI	25.000	ug/L	C	U	UNFI	25.000	ug/L	D	U		NA			
2,4,6-Trichlorophenol	UNFI	10.000	ug/L	C	U	UNFI	10.000	ug/L	D	U		NA			
2,4-Dichlorophenol	UNFI	10.000	ug/L	C	U	UNFI	10.000	ug/L	D	U		NA			
2,4-Dimethylphenol	UNFI	10.000	ug/L	C	U	UNFI	10.000	ug/L	D	U		NA			
2,4-Dinitrophenol	UNFI	25.000	ug/L	C	R	UNFI	25.000	ug/L	D	U		NA			
2,4-Dinitrotoluene	UNFI	10.000	ug/L	C	UJ	UNFI	10.000	ug/L	D	U		NA			
2,6-Dinitrotoluene	UNFI	10.000	ug/L	C	U	UNFI	10.000	ug/L	D	U		NA			
2-Benzyl-4-chlorophenol	UNFI	10.000	ug/L	C	U		NA					NA			
2-Chloronaphthalene	UNFI	10.000	ug/L	C	U	UNFI	10.000	ug/L	D	U		NA			
2-Chlorophenol	UNFI	10.000	ug/L	C	U	UNFI	10.000	ug/L	D	U		NA			
2-Methylnaphthalene	UNFI	10.000	ug/L	C	U	UNFI	10.000	ug/L	D	U		NA			
2-Methylphenol	UNFI	10.000	ug/L	C	U	UNFI	10.000	ug/L	D	U		NA			
2-Nitroaniline	UNFI	25.000	ug/L	C	U	UNFI	25.000	ug/L	D	U		NA			
2-Nitrophenol	UNFI	10.000	ug/L	C	U	UNFI	10.000	ug/L	D	U		NA			
3,3'-Dichlorobenzidine	UNFI	10.000	ug/L	C	U	UNFI	10.000	ug/L	D	U		NA			
3-Nitroaniline	UNFI	25.000	ug/L	C	U	UNFI	25.000	ug/L	D	U		NA			
4,6-Dinitro-2-methylphenol	UNFI	25.000	ug/L	C	R	UNFI	25.000	ug/L	D	R		NA			
4-Bromophenyl phenyl ether	UNFI	10.000	ug/L	C	U	UNFI	10.000	ug/L	D	U		NA			
4-Chloro-3-methylphenol	UNFI	10.000	ug/L	C	U	UNFI	10.000	ug/L	D	U		NA			
4-Chlorophenylphenyl ether	UNFI	10.000	ug/L	C	U	UNFI	10.000	ug/L	D	U		NA			
4-Methylphenol	UNFI	10.000	ug/L	C	U	UNFI	10.000	ug/L	D	U		NA			
4-Nitroaniline	UNFI	25.000	ug/L	C	U	UNFI	25.000	ug/L	D	R		NA			
4-Nitrophenol	UNFI	25.000	ug/L	C	UJ	UNFI	25.000	ug/L	D	U		NA			
Acenaphthene	UNFI	10.000	ug/L	C	U	UNFI	10.000	ug/L	D	U		NA			
Acenaphthylene	UNFI	10.000	ug/L	C	U	UNFI	10.000	ug/L	D	U		NA			
Anthracene	UNFI	10.000	ug/L	C	U	UNFI	10.000	ug/L	D	U		NA			
Benzo(a)anthracene	UNFI	10.000	ug/L	C	U	UNFI	10.000	ug/L	D	U		NA			
Benzo(a)pyrene	UNFI	10.000	ug/L	C	U	UNFI	10.000	ug/L	D	U		NA			
Benzo(b)fluoranthene	UNFI	10.000	ug/L	C	U	UNFI	10.000	ug/L	D	U		NA			
Benzo(g,h,i)perylene	UNFI	10.000	ug/L	C	U	UNFI	10.000	ug/L	D	U		NA			
Benzo(k)fluoranthene	UNFI	10.000	ug/L	C	U	UNFI	10.000	ug/L	D	U		NA			

000892

TABLE D-11A
(Continued)

PHASE II - CHEMICAL PARAMETERS

BORING NUMBER	1042					1934					1934			
SAMPLE NUMBER	110889					114620					114622 DUPLICATE			
SAMPLING DATE	04/22/93					05/13/93					05/13/93			
CHEMICAL PARAMETERS	FLTD	RESULTS	UNITS	L	VQ	FLTD	RESULTS	UNITS	L	VQ	FLTD	RESULTS	UNITS	L	VQ
Semivolatile Organics															
Benzoic acid	UNFI	50.000	ug/L	C	R	UNFI	50.000	ug/L	D	U		NA			
Benzyl alcohol	UNFI	10.000	ug/L	C	UJ	UNFI	10.000	ug/L	D	U		NA			
Butyl benzyl phthalate	UNFI	10.000	ug/L	C	U	UNFI	10.000	ug/L	D	U		NA			
Carbazole	UNFI	10.000	ug/L	C	U	UNFI	10.000	ug/L	D	U		NA			
Chrysene	UNFI	10.000	ug/L	C	U	UNFI	10.000	ug/L	D	U		NA			
Di-n-butyl phthalate	UNFI	10.000	ug/L	C	U	UNFI	10.000	ug/L	D	U		NA			
Di-n-octyl phthalate	UNFI	10.000	ug/L	C	U	UNFI	10.000	ug/L	D	U		NA			
Dibenzo(a,h)anthracene	UNFI	10.000	ug/L	C	U	UNFI	10.000	ug/L	D	U		NA			
Dibenzofuran	UNFI	10.000	ug/L	C	U	UNFI	10.000	ug/L	D	U		NA			
Diethyl phthalate	UNFI	10.000	ug/L	C	U	UNFI	10.000	ug/L	D	U		NA			
Dimethyl phthalate	UNFI	10.000	ug/L	C	U	UNFI	10.000	ug/L	D	U		NA			
Fluoranthene	UNFI	10.000	ug/L	C	U	UNFI	10.000	ug/L	D	U		NA			
Fluorene	UNFI	10.000	ug/L	C	U	UNFI	10.000	ug/L	D	U		NA			
Hexachlorobenzene	UNFI	10.000	ug/L	C	U	UNFI	10.000	ug/L	D	U		NA			
Hexachlorobutadiene	UNFI	10.000	ug/L	C	U	UNFI	10.000	ug/L	D	U		NA			
Hexachlorocyclopentadiene	UNFI	10.000	ug/L	C	UJ	UNFI	10.000	ug/L	D	U		NA			
Hexachloroethane	UNFI	10.000	ug/L	C	U	UNFI	10.000	ug/L	D	U		NA			
Indeno(1,2,3-cd)pyrene	UNFI	10.000	ug/L	C	U	UNFI	10.000	ug/L	D	U		NA			
Isophorone	UNFI	10.000	ug/L	C	U	UNFI	10.000	ug/L	D	U		NA			
N-Nitroso-di-n-propylamine	UNFI	10.000	ug/L	C	U	UNFI	10.000	ug/L	D	U		NA			
N-Nitrosodimethylamine	UNFI	10.000	ug/L	C	U		NA					NA			
N-Nitrosodiphenylamine	UNFI	10.000	ug/L	C	U	UNFI	10.000	ug/L	D	U		NA			
Naphthalene	UNFI	10.000	ug/L	C	U	UNFI	10.000	ug/L	D	U		NA			
Nitrobenzene	UNFI	10.000	ug/L	C	U	UNFI	10.000	ug/L	D	U		NA			
Pentachlorophenol	UNFI	25.000	ug/L	C	U	UNFI	25.000	ug/L	D	U		NA			
Phenanthrene	UNFI	10.000	ug/L	C	U	UNFI	10.000	ug/L	D	U		NA			
Phenol	UNFI	10.000	ug/L	C	U	UNFI	10.000	ug/L	D	U		NA			
Pyrene	UNFI	10.000	ug/L	C	U	UNFI	10.000	ug/L	D	U		NA			
Tributyl phosphate	UNFI	10.000	ug/L	C	U		NA					NA			
bis(2-Chloroethoxy)methane	UNFI	10.000	ug/L	C	U	UNFI	10.000	ug/L	D	U		NA			
bis(2-Chloroethyl)ether	UNFI	10.000	ug/L	C	U	UNFI	10.000	ug/L	D	U		NA			
bis(2-Chloroisopropyl) ether	UNFI	10.000	ug/L	C	U	UNFI	10.000	ug/L	D	UJ		NA			
bis(2-Ethylhexyl) phthalate	UNFI	10.000	ug/L	C	U	UNFI	10.000	ug/L	D	U		NA			
p-Chloroaniline	UNFI	10.000	ug/L	C	U	UNFI	10.000	ug/L	D	U		NA			
Pesticide Organics/PCBs															
4,4'-DDD	UNFI	0.100	ug/L	C	U	UNFI	0.100	ug/L	D	U		NA			
4,4'-DDE	UNFI	0.100	ug/L	C	U	UNFI	0.100	ug/L	D	U		NA			
4,4'-DDT	UNFI	0.100	ug/L	C	UJ	UNFI	0.100	ug/L	D	U		NA			
Aldrin	UNFI	0.050	ug/L	C	U	UNFI	0.050	ug/L	D	U		NA			
Aroclor-1016	UNFI	1.000	ug/L	C	U	UNFI	1.000	ug/L	D	U		NA			

TABLE D-11A
(Continued)

PHASE II - CHEMICAL PARAMETERS

BORING NUMBER		1042					1934					1934		
SAMPLE NUMBER		110889					114620					114622		
												DUPLICATE		
SAMPLING DATE		04/22/93					05/13/93					05/13/93		
CHEMICAL PARAMETERS	FLTD	RESULTS	UNITS	L	VQ	FLTD	RESULTS	UNITS	L	VQ	FLTD	RESULTS	UNITS	L	VQ
Pesticide Organics/PCBs															
Aroclor-1221	UNFI	2.000	ug/L	C	U	UNFI	2.000	ug/L	D	U		NA			
Aroclor-1232	UNFI	1.000	ug/L	C	U	UNFI	1.000	ug/L	D	U		NA			
Aroclor-1242	UNFI	1.000	ug/L	C	U	UNFI	1.000	ug/L	D	U		NA			
Aroclor-1248	UNFI	1.000	ug/L	C	U	UNFI	1.000	ug/L	D	U		NA			
Aroclor-1254	UNFI	1.000	ug/L	C	U	UNFI	1.000	ug/L	D	U		NA			
Aroclor-1260	UNFI	1.000	ug/L	C	U	UNFI	1.000	ug/L	D	U		NA			
Dieldrin	UNFI	0.100	ug/L	C	U	UNFI	0.100	ug/L	D	U		NA			
Endosulfan II	UNFI	0.100	ug/L	C	U	UNFI	0.100	ug/L	D	U		NA			
Endosulfan sulfate	UNFI	0.100	ug/L	C	U	UNFI	0.100	ug/L	D	U		NA			
Endosulfan-I	UNFI	0.050	ug/L	C	U	UNFI	0.050	ug/L	D	U		NA			
Endrin	UNFI	0.100	ug/L	C	U	UNFI	0.100	ug/L	D	U		NA			
Endrin aldehyde	UNFI	0.100	ug/L	C	U	UNFI	0.100	ug/L	D	U		NA			
Endrin ketone	UNFI	0.100	ug/L	C	U	UNFI	0.100	ug/L	D	U		NA			
Heptachlor	UNFI	0.050	ug/L	C	U	UNFI	0.050	ug/L	D	U		NA			
Heptachlor epoxide	UNFI	0.050	ug/L	C	U	UNFI	0.050	ug/L	D	U		NA			
Methoxychlor	UNFI	0.500	ug/L	C	U	UNFI	0.500	ug/L	D	U		NA			
Toxaphene	UNFI	5.000	ug/L	C	U	UNFI	5.000	ug/L	D	U		NA			
alpha-BHC	UNFI	0.050	ug/L	C	UJ	UNFI	0.050	ug/L	D	U		NA			
alpha-Chlordane	UNFI	0.050	ug/L	C	U	UNFI	0.050	ug/L	D	U		NA			
beta-BHC	UNFI	0.050	ug/L	C	U	UNFI	0.050	ug/L	D	U		NA			
delta-BHC	UNFI	0.050	ug/L	C	UJ	UNFI	0.050	ug/L	D	U		NA			
gamma-BHC (Lindane)	UNFI	0.050	ug/L	C	UJ	UNFI	0.050	ug/L	D	U		NA			
gamma-Chlordane	UNFI	0.050	ug/L	C	U	UNFI	0.050	ug/L	D	U		NA			
General Chemistry															
Alkalinity	UNFI	245.000	mg/L	B	J	UNFI	385.000	mg/L	B	-		NA			
Ammonia	UNFI	0.100	mg/L	B	U	UNFI	0.150	mg/L	B	-		NA			
Chloride	UNFI	88.090	mg/L	B	-	UNFI	47.100	mg/L	B	-		NA			
Fluoride	UNFI	0.200	mg/L	B	-	UNFI	0.440	mg/L	B	-		NA			
Nitrate	UNFI	0.100	mg/L	B	R	UNFI	0.100	mg/L	B	R		NA			
Phenols	UNFI	0.010	mg/L	B	U	UNFI	0.010	mg/L	B	U		NA			
Phosphorus	UNFI	0.020	mg/L	B	U		NA					NA			
Sulfate	UNFI	138.000	mg/L	B	-	UNFI	77.800	mg/L	B	-		NA			
Sulfide	UNFI	0.500	mg/L	B	U	UNFI	1.350	mg/L	B	-		NA			
Total Kjeldahl Nitrogen	UNFI	0.100	mg/L	B	U	UNFI	0.500	mg/L	B	-		NA			
Total Organic Carbon	UNFI	1.400	mg/L	B	-	UNFI	1.570	mg/L	B	-		NA			
Total Organic Halides	UNFI	0.010	mg/L	B	U	UNFI	0.018	mg/L	B	-		NA			
Total Organic Nitrogen	UNFI	0.100	mg/L	B	U	UNFI	1.200	mg/L	B	-		NA			
Total Phosphorous		NA				UNFI	4.130	mg/L	B	-		NA			

000894

TABLE D-11A
(Continued)

PHASE II - CHEMICAL PARAMETERS

BORING NUMBER	1937					1937					1937				
SAMPLE NUMBER	114617					114626					114782				
SAMPLING DATE	05/11/93					06/01/93					06/01/93				
CHEMICAL PARAMETERS	FLTD	RESULTS	UNITS	L	VQ	FLTD	RESULTS	UNITS	L	VQ	FLTD	RESULTS	UNITS	L	VQ
Inorganics															
Aluminum	UNFI	0.093	mg/L	C	-		NA				UNFI	15.400	mg/L	C	-
Antimony	UNFI	0.007	mg/L	C	UJ		NA				UNFI	0.005	mg/L	C	UJ
Arsenic	UNFI	0.001	mg/L	C	U		NA				UNFI	0.004	mg/L	C	J
Barium	UNFI	0.163	mg/L	C	-		NA				UNFI	0.217	mg/L	C	-
Beryllium	UNFI	0.001	mg/L	C	U		NA				UNFI	0.002	mg/L	C	U
Cadmium	UNFI	0.002	mg/L	C	U		NA				UNFI	0.005	mg/L	C	UJ
Calcium	UNFI	214.000	mg/L	C	-		NA				UNFI	446.000	mg/L	C	-
Chromium	UNFI	0.004	mg/L	C	U		NA				UNFI	0.016	mg/L	C	J
Cobalt	UNFI	0.003	mg/L	C	U		NA				UNFI	0.010	mg/L	C	U
Copper	UNFI	0.002	mg/L	C	U		NA				UNFI	0.010	mg/L	C	U
Cyanide	UNFI	0.001	mg/L	C	U		NA					NA			
Iron	UNFI	0.017	mg/L	C	U		NA				UNFI	23.700	mg/L	C	-
Lead	UNFI	0.001	mg/L	C	U		NA				UNFI	0.015	mg/L	C	-
Magnesium	UNFI	82.000	mg/L	C	-		NA				UNFI	144.000	mg/L	C	-
Manganese	UNFI	0.612	mg/L	C	-		NA				UNFI	1.290	mg/L	C	-
Mercury	UNFI	0.000	mg/L	C	U		NA				UNFI	0.000	mg/L	C	U
Molybdenum	UNFI	0.004	mg/L	C	U		NA				UNFI	0.010	mg/L	C	U
Nickel	UNFI	0.003	mg/L	C	U		NA				UNFI	0.029	mg/L	C	J
Potassium	UNFI	2.010	mg/L	C	-		NA				UNFI	7.400	mg/L	C	-
Selenium	UNFI	0.001	mg/L	C	U		NA				UNFI	0.002	mg/L	C	UJ
Silicon	UNFI	5.950	mg/L	C	-		NA				UNFI	31.000	mg/L	C	J
Silver	UNFI	0.002	mg/L	C	U		NA				UNFI	0.010	mg/L	C	U
Sodium	UNFI	146.000	mg/L	C	-		NA				UNFI	156.000	mg/L	C	-
Thallium	UNFI	0.001	mg/L	C	UJ		NA				UNFI	0.010	mg/L	C	UJ
Vanadium	UNFI	0.011	mg/L	C	U		NA				UNFI	0.038	mg/L	C	-
Zinc	UNFI	0.003	mg/L	C	U		NA				UNFI	0.065	mg/L	C	J
Volatile Organics															
1,1,1-Trichloroethane		NA				UNFI	10.000	ug/L	C	U		NA			
1,1,2,2-Tetrachloroethane		NA				UNFI	10.000	ug/L	C	U		NA			
1,1,2-Trichloroethane		NA				UNFI	10.000	ug/L	C	U		NA			
1,1-Dichloroethane		NA				UNFI	10.000	ug/L	C	U		NA			
1,1-Dichloroethene		NA				UNFI	10.000	ug/L	C	U		NA			
1,2-Dichloroethane		NA				UNFI	10.000	ug/L	C	U		NA			
1,2-Dichloroethene		NA				UNFI	10.000	ug/L	C	U		NA			
1,2-Dichloropropane		NA				UNFI	10.000	ug/L	C	U		NA			
2-Butanone		NA				UNFI	10.000	ug/L	C	U		NA			
2-Hexanone		NA				UNFI	10.000	ug/L	C	U		NA			
4-Methyl-2-pentanone		NA				UNFI	10.000	ug/L	C	U		NA			
Acetone		NA				UNFI	10.000	ug/L	C	U		NA			
Benzene		NA				UNFI	10.000	ug/L	C	U		NA			

000895
6508

TABLE D-11A
(Continued)

PHASE II - CHEMICAL PARAMETERS

BORING NUMBER	1937					1937					1937			
SAMPLE NUMBER	114617					114626					114782			
SAMPLING DATE	05/11/93					06/01/93					06/01/93			
CHEMICAL PARAMETERS	FLTD	RESULTS	UNITS	L	VQ	FLTD	RESULTS	UNITS	L	VQ	FLTD	RESULTS	UNITS	L	VQ
Volatile Organics															
Bromodichloromethane		NA				UNFI	10.000	ug/L	C	U		NA			
Bromoform		NA				UNFI	10.000	ug/L	C	U		NA			
Bromomethane		NA				UNFI	10.000	ug/L	C	U		NA			
Carbon Tetrachloride		NA				UNFI	10.000	ug/L	C	U		NA			
Carbon disulfide		NA				UNFI	10.000	ug/L	C	U		NA			
Chlorobenzene		NA				UNFI	10.000	ug/L	C	U		NA			
Chloroethane		NA				UNFI	10.000	ug/L	C	U		NA			
Chloroform		NA				UNFI	10.000	ug/L	C	U		NA			
Chloromethane		NA				UNFI	10.000	ug/L	C	U		NA			
Dibromochloromethane		NA				UNFI	10.000	ug/L	C	U		NA			
Ethylbenzene		NA				UNFI	10.000	ug/L	C	U		NA			
Methylene chloride		NA				UNFI	10.000	ug/L	C	U		NA			
Styrene		NA				UNFI	10.000	ug/L	C	U		NA			
Tetrachloroethene		NA				UNFI	10.000	ug/L	C	U		NA			
Toluene		NA				UNFI	10.000	ug/L	C	U		NA			
Trichloroethene		NA				UNFI	10.000	ug/L	C	U		NA			
Vinyl Acetate		NA				UNFI	10.000	ug/L	C	U		NA			
Vinyl chloride		NA				UNFI	10.000	ug/L	C	U		NA			
Xylenes, Total		NA				UNFI	10.000	ug/L	C	U		NA			
cis-1,3-Dichloropropene		NA				UNFI	10.000	ug/L	C	U		NA			
trans-1,3-Dichloropropene		NA				UNFI	10.000	ug/L	C	U		NA			
Semivolatile Organics															
1,2,4-Trichlorobenzene	UNFI	10.000	ug/L	C	U		NA					NA			
1,2-Dichlorobenzene	UNFI	10.000	ug/L	C	U		NA					NA			
1,3-Dichlorobenzene	UNFI	10.000	ug/L	C	U		NA					NA			
1,4-Dichlorobenzene	UNFI	10.000	ug/L	C	U		NA					NA			
2,4,5-Trichlorophenol	UNFI	25.000	ug/L	C	U		NA					NA			
2,4,6-Trichlorophenol	UNFI	10.000	ug/L	C	U		NA					NA			
2,4-Dichlorophenol	UNFI	10.000	ug/L	C	U		NA					NA			
2,4-Dimethylphenol	UNFI	10.000	ug/L	C	U		NA					NA			
2,4-Dinitrophenol	UNFI	25.000	ug/L	C	U		NA					NA			
2,4-Dinitrotoluene	UNFI	10.000	ug/L	C	U		NA					NA			
2,6-Dinitrotoluene	UNFI	10.000	ug/L	C	U		NA					NA			
2-Chloronaphthalene	UNFI	10.000	ug/L	C	U		NA					NA			
2-Chlorophenol	UNFI	10.000	ug/L	C	U		NA					NA			
2-Methylnaphthalene	UNFI	10.000	ug/L	C	U		NA					NA			
2-Methylphenol	UNFI	10.000	ug/L	C	U		NA					NA			
2-Nitroaniline	UNFI	25.000	ug/L	C	U		NA					NA			
2-Nitrophenol	UNFI	10.000	ug/L	C	U		NA					NA			
3,3'-Dichlorobenzidine	UNFI	10.000	ug/L	C	U		NA					NA			

000896

TABLE D-11A
(Continued)

PHASE II - CHEMICAL PARAMETERS

BORING NUMBER		1937					1937					1937			
SAMPLE NUMBER		114617					114626					114782			
SAMPLING DATE		05/11/93					06/01/93					06/01/93			
CHEMICAL PARAMETERS	FLTD	RESULTS	UNITS	L	VQ	FLTD	RESULTS	UNITS	L	VQ	FLTD	RESULTS	UNITS	L	VQ
Semivolatile Organics															
3-Nitroaniline	UNFI	25.000	ug/L	C	U		NA					NA			
4,6-Dinitro-2-methylphenol	UNFI	25.000	ug/L	C	R		NA					NA			
4-Bromophenyl phenyl ether	UNFI	10.000	ug/L	C	U		NA					NA			
4-Chloro-3-methylphenol	UNFI	10.000	ug/L	C	U		NA					NA			
4-Chlorophenylphenyl ether	UNFI	10.000	ug/L	C	U		NA					NA			
4-Methylphenol	UNFI	10.000	ug/L	C	U		NA					NA			
4-Nitroaniline	UNFI	25.000	ug/L	C	R		NA					NA			
4-Nitrophenol	UNFI	25.000	ug/L	C	U		NA					NA			
Acenaphthene	UNFI	10.000	ug/L	C	U		NA					NA			
Acenaphthylene	UNFI	10.000	ug/L	C	U		NA					NA			
Anthracene	UNFI	10.000	ug/L	C	U		NA					NA			
Benzo(a)anthracene	UNFI	10.000	ug/L	C	U		NA					NA			
Benzo(a)pyrene	UNFI	10.000	ug/L	C	U		NA					NA			
Benzo(b)fluoranthene	UNFI	10.000	ug/L	C	U		NA					NA			
Benzo(g,h,i)perylene	UNFI	10.000	ug/L	C	U		NA					NA			
Benzo(k)fluoranthene	UNFI	10.000	ug/L	C	U		NA					NA			
Benzoic acid	UNFI	50.000	ug/L	C	U		NA					NA			
Benzyl alcohol	UNFI	10.000	ug/L	C	U		NA					NA			
Butyl benzyl phthalate	UNFI	10.000	ug/L	C	U		NA					NA			
Carbazole	UNFI	10.000	ug/L	C	U		NA					NA			
Chrysene	UNFI	10.000	ug/L	C	U		NA					NA			
Di-n-butyl phthalate	UNFI	10.000	ug/L	C	U		NA					NA			
Di-n-octyl phthalate	UNFI	10.000	ug/L	C	U		NA					NA			
Dibenzo(a,h)anthracene	UNFI	10.000	ug/L	C	U		NA					NA			
Dibenzofuran	UNFI	10.000	ug/L	C	U		NA					NA			
Diethyl phthalate	UNFI	10.000	ug/L	C	U		NA					NA			
Dimethyl phthalate	UNFI	10.000	ug/L	C	U		NA					NA			
Fluoranthene	UNFI	10.000	ug/L	C	U		NA					NA			
Fluorene	UNFI	10.000	ug/L	C	U		NA					NA			
Hexachlorobenzene	UNFI	10.000	ug/L	C	U		NA					NA			
Hexachlorobutadiene	UNFI	10.000	ug/L	C	U		NA					NA			
Hexachlorocyclopentadiene	UNFI	10.000	ug/L	C	U		NA					NA			
Hexachloroethane	UNFI	10.000	ug/L	C	U		NA					NA			
Indeno(1,2,3-cd)pyrene	UNFI	10.000	ug/L	C	U		NA					NA			
Isophorone	UNFI	10.000	ug/L	C	U		NA					NA			
N-Nitroso-di-n-propylamine	UNFI	10.000	ug/L	C	U		NA					NA			
N-Nitrosodiphenylamine	UNFI	10.000	ug/L	C	U		NA					NA			
Naphthalene	UNFI	10.000	ug/L	C	U		NA					NA			
Nitrobenzene	UNFI	10.000	ug/L	C	U		NA					NA			
Pentachlorophenol	UNFI	25.000	ug/L	C	U		NA					NA			
Phenanthrene	UNFI	10.000	ug/L	C	U		NA					NA			
Phenol	UNFI	10.000	ug/L	C	U		NA					NA			

000897

6508

TABLE D-11A
(Continued)

PHASE II - CHEMICAL PARAMETERS

BORING NUMBER		1937					1937					1937			
SAMPLE NUMBER		114617					114626					114782			
SAMPLING DATE		05/11/93					06/01/93					06/01/93			
CHEMICAL PARAMETERS	FLTD	RESULTS	UNITS	L	VQ	FLTD	RESULTS	UNITS	L	VQ	FLTD	RESULTS	UNITS	L	VQ
Semivolatile Organics															
Pyrene	UNFI	10.000	ug/L	C	U		NA					NA			
bis(2-Chloroethoxy)methane	UNFI	10.000	ug/L	C	U		NA					NA			
bis(2-Chloroethyl)ether	UNFI	10.000	ug/L	C	U		NA					NA			
bis(2-Chloroisopropyl) ether	UNFI	10.000	ug/L	C	UJ		NA					NA			
bis(2-Ethylhexyl) phthalate	UNFI	1.000	ug/L	C	J		NA					NA			
p-Chloroaniline	UNFI	10.000	ug/L	C	U		NA					NA			
Pesticide Organics/PCBs															
4,4'-DDD	UNFI	0.100	ug/L	C	U		NA					NA			
4,4'-DDE	UNFI	0.100	ug/L	C	U		NA					NA			
4,4'-DDT	UNFI	0.100	ug/L	C	U		NA					NA			
Aldrin	UNFI	0.050	ug/L	C	U		NA					NA			
Aroclor-1016	UNFI	1.000	ug/L	C	U		NA					NA			
Aroclor-1221	UNFI	2.000	ug/L	C	U		NA					NA			
Aroclor-1232	UNFI	1.000	ug/L	C	U		NA					NA			
Aroclor-1242	UNFI	1.000	ug/L	C	U		NA					NA			
Aroclor-1248	UNFI	1.000	ug/L	C	U		NA					NA			
Aroclor-1254	UNFI	1.000	ug/L	C	U		NA					NA			
Aroclor-1260	UNFI	1.000	ug/L	C	U		NA					NA			
Dieldrin	UNFI	0.100	ug/L	C	U		NA					NA			
Endosulfan II	UNFI	0.100	ug/L	C	U		NA					NA			
Endosulfan sulfate	UNFI	0.100	ug/L	C	U		NA					NA			
Endosulfan-I	UNFI	0.050	ug/L	C	U		NA					NA			
Endrin	UNFI	0.100	ug/L	C	U		NA					NA			
Endrin aldehyde	UNFI	0.100	ug/L	C	U		NA					NA			
Endrin ketone	UNFI	0.100	ug/L	C	U		NA					NA			
Heptachlor	UNFI	0.050	ug/L	C	U		NA					NA			
Heptachlor epoxide	UNFI	0.050	ug/L	C	U		NA					NA			
Methoxychlor	UNFI	0.500	ug/L	C	U		NA					NA			
Toxaphene	UNFI	5.000	ug/L	C	U		NA					NA			
alpha-BHC	UNFI	0.050	ug/L	C	U		NA					NA			
alpha-Chlordane	UNFI	0.050	ug/L	C	U		NA					NA			
beta-BHC	UNFI	0.050	ug/L	C	U		NA					NA			
delta-BHC	UNFI	0.050	ug/L	C	U		NA					NA			
gamma-BHC (Lindane)	UNFI	0.050	ug/L	C	U		NA					NA			
gamma-Chlordane	UNFI	0.050	ug/L	C	U		NA					NA			
General Chemistry															
Alkalinity	UNFI	292.500	mg/L	B	-		NA					NA			
Ammonia	UNFI	0.140	mg/L	B	-		NA					NA			

000898

TABLE D-11A
(Continued)

PHASE II - CHEMICAL PARAMETERS

BORING NUMBER		1937					1937					1937			
SAMPLE NUMBER		114617					114626					114782			
SAMPLING DATE		05/11/93					06/01/93					06/01/93			
CHEMICAL PARAMETERS	FLTD	RESULTS	UNITS	L	VQ	FLTD	RESULTS	UNITS	L	VQ	FLTD	RESULTS	UNITS	L	VQ
General Chemistry															
Chloride	UNFI	573.800	mg/L	B	-		NA					NA			
Fluoride	UNFI	0.290	mg/L	B	-		NA					NA			
Nitrate	UNFI	0.100	mg/L	B	R		NA					NA			
Phenols	UNFI	0.010	mg/L	B	U		NA					NA			
Sulfate	UNFI	57.400	mg/L	B	-		NA					NA			
Sulfide	UNFI	0.500	mg/L	B	U		NA					NA			
Total Kjeldahl Nitrogen	UNFI	0.290	mg/L	B	-		NA					NA			
Total Organic Carbon		NA				UNFI	1.650	mg/L	C	-		NA			
Total Organic Halides	UNFI	0.067	mg/L	B	-		NA					NA			
Total Organic Nitrogen	UNFI	0.150	mg/L	B	-		NA					NA			
Total Phosphorous	UNFI	1.000	mg/L	B	-		NA					NA			

TABLE D-11A
(Continued)

PHASE II - CHEMICAL PARAMETERS

BORING NUMBER		1940					1940					2042			
SAMPLE NUMBER		114784					114785					110989			
SAMPLING DATE		06/11/93					06/11/93					05/04/93			
CHEMICAL PARAMETERS	FLTD	RESULTS	UNITS	L	VQ	FLTD	RESULTS	UNITS	L	VQ	FLTD	RESULTS	UNITS	L	VQ
Inorganics															
Aluminum	UNFI	0.786	mg/L	C	-	UNFI	13.100	mg/L	C	-	UNFI	0.092	mg/L	C	U
Antimony	UNFI	0.059	mg/L	C	U	UNFI	0.059	mg/L	C	U	UNFI	0.003	mg/L	C	UJ
Arsenic	UNFI	0.002	mg/L	C	-	UNFI	0.005	mg/L	C	-	UNFI	0.001	mg/L	C	U
Barium	UNFI	0.176	mg/L	C	-	UNFI	0.212	mg/L	C	-	UNFI	0.043	mg/L	C	-
Beryllium	UNFI	0.000	mg/L	C	U	UNFI	0.001	mg/L	C	U	UNFI	0.001	mg/L	C	U
Cadmium	UNFI	0.003	mg/L	C	U	UNFI	0.003	mg/L	C	U	UNFI	0.002	mg/L	C	U
Calcium	UNFI	146.000	mg/L	C	-	UNFI	283.000	mg/L	C	-	UNFI	115.000	mg/L	C	-
Chromium	UNFI	0.005	mg/L	C	U	UNFI	0.012	mg/L	C	-	UNFI	0.005	mg/L	C	-
Cobalt	UNFI	0.004	mg/L	C	U	UNFI	0.016	mg/L	C	U	UNFI	0.003	mg/L	C	U
Copper	UNFI	0.009	mg/L	C	-	UNFI	0.328	mg/L	C	-	UNFI	0.002	mg/L	C	U
Cyanide	UNFI	0.002	mg/L	C	R		NA				UNFI	0.001	mg/L	C	U
Iron	UNFI	1.370	mg/L	C	-	UNFI	26.400	mg/L	C	-	UNFI	2.380	mg/L	C	J
Lead	UNFI	0.002	mg/L	C	U	UNFI	0.017	mg/L	C	-	UNFI	0.001	mg/L	C	U
Magnesium	UNFI	56.400	mg/L	C	-	UNFI	104.000	mg/L	C	-	UNFI	26.500	mg/L	C	-
Manganese	UNFI	0.298	mg/L	C	-	UNFI	0.815	mg/L	C	-	UNFI	1.290	mg/L	C	J
Mercury	UNFI	0.000	mg/L	C	UJ	UNFI	0.000	mg/L	C	UJ	UNFI	0.000	mg/L	C	U
Molybdenum	UNFI	0.014	mg/L	C	-	UNFI	0.012	mg/L	C	-	UNFI	0.003	mg/L	C	U
Nickel	UNFI	0.042	mg/L	C	-	UNFI	0.027	mg/L	C	-	UNFI	0.003	mg/L	C	U
Potassium	UNFI	2.980	mg/L	C	U	UNFI	3.780	mg/L	C	-	UNFI	3.160	mg/L	C	-
Selenium	UNFI	0.001	mg/L	C	UJ	UNFI	0.001	mg/L	C	UJ	UNFI	0.001	mg/L	C	U
Silicon	UNFI	7.900	mg/L	C	-	UNFI	26.400	mg/L	C	-	UNFI	4.370	mg/L	C	-
Silver	UNFI	0.004	mg/L	C	U	UNFI	0.004	mg/L	C	U	UNFI	0.002	mg/L	C	U
Sodium	UNFI	59.400	mg/L	C	-	UNFI	60.500	mg/L	C	-	UNFI	13.100	mg/L	C	-
Thallium	UNFI	0.001	mg/L	C	U	UNFI	0.001	mg/L	C	U	UNFI	0.001	mg/L	C	U
Vanadium	UNFI	0.002	mg/L	C	U	UNFI	0.029	mg/L	C	-	UNFI	0.010	mg/L	C	U
Zinc	UNFI	0.020	mg/L	C	U	UNFI	0.105	mg/L	C	-	UNFI	0.004	mg/L	C	U
Volatile Organics															
1,1,1-Trichloroethane	UNFI	10.000	ug/L	C	U		NA				UNFI	10.000	ug/L	C	U
1,1,2,2-Tetrachloroethane	UNFI	10.000	ug/L	C	U		NA				UNFI	10.000	ug/L	C	U
1,1,2-Trichloroethane	UNFI	10.000	ug/L	C	U		NA				UNFI	10.000	ug/L	C	U
1,1-Dichloroethane	UNFI	10.000	ug/L	C	U		NA				UNFI	10.000	ug/L	C	U
1,1-Dichloroethene	UNFI	10.000	ug/L	C	U		NA				UNFI	10.000	ug/L	C	U
1,2-Dichloroethane	UNFI	10.000	ug/L	C	U		NA				UNFI	10.000	ug/L	C	U
1,2-Dichloroethene	UNFI	10.000	ug/L	C	U		NA				UNFI	10.000	ug/L	C	U
1,2-Dichloropropane	UNFI	10.000	ug/L	C	U		NA				UNFI	10.000	ug/L	C	U
2-Butanone	UNFI	10.000	ug/L	C	UJ		NA				UNFI	10.000	ug/L	C	U
2-Hexanone	UNFI	10.000	ug/L	C	R		NA				UNFI	10.000	ug/L	C	U
4-Methyl-2-pentanone	UNFI	10.000	ug/L	C	R		NA				UNFI	10.000	ug/L	C	U
Acetone	UNFI	10.000	ug/L	C	R		NA				UNFI	10.000	ug/L	C	U
Benzene	UNFI	10.000	ug/L	C	U		NA				UNFI	10.000	ug/L	C	U

000900

TABLE D-11A
(Continued)

PHASE II - CHEMICAL PARAMETERS

BORING NUMBER	1940					1940					2042				
SAMPLE NUMBER	114784					114785					110989				
SAMPLING DATE	06/11/93					06/11/93					05/04/93				
CHEMICAL PARAMETERS	FLTD	RESULTS	UNITS	L	VQ	FLTD	RESULTS	UNITS	L	VQ	FLTD	RESULTS	UNITS	L	VQ
Volatile Organics															
Bromodichloromethane	UNFI	10.000	ug/L	C	U		NA				UNFI	10.000	ug/L	C	U
Bromoform	UNFI	10.000	ug/L	C	U		NA				UNFI	10.000	ug/L	C	U
Bromomethane	UNFI	10.000	ug/L	C	U		NA				UNFI	10.000	ug/L	C	U
Carbon Tetrachloride	UNFI	10.000	ug/L	C	U		NA				UNFI	10.000	ug/L	C	U
Carbon disulfide	UNFI	10.000	ug/L	C	R		NA				UNFI	10.000	ug/L	C	UJ
Chlorobenzene	UNFI	10.000	ug/L	C	U		NA				UNFI	10.000	ug/L	C	U
Chloroethane	UNFI	10.000	ug/L	C	UJ		NA				UNFI	10.000	ug/L	C	UJ
Chloroform	UNFI	10.000	ug/L	C	U		NA				UNFI	10.000	ug/L	C	U
Chloromethane	UNFI	10.000	ug/L	C	U		NA				UNFI	10.000	ug/L	C	UJ
Dibromochloromethane	UNFI	10.000	ug/L	C	U		NA				UNFI	10.000	ug/L	C	U
Ethylbenzene	UNFI	10.000	ug/L	C	U		NA				UNFI	10.000	ug/L	C	U
Methylene chloride	UNFI	10.000	ug/L	C	UJ		NA				UNFI	10.000	ug/L	C	UJ
Styrene	UNFI	10.000	ug/L	C	U		NA				UNFI	10.000	ug/L	C	U
Tetrachloroethene	UNFI	10.000	ug/L	C	U		NA				UNFI	10.000	ug/L	C	U
Toluene	UNFI	10.000	ug/L	C	U		NA				UNFI	10.000	ug/L	C	U
Trichloroethene	UNFI	10.000	ug/L	C	U		NA				UNFI	10.000	ug/L	C	U
Vinyl Acetate		NA					NA				UNFI	10.000	ug/L	C	U
Vinyl chloride	UNFI	10.000	ug/L	C	U		NA				UNFI	10.000	ug/L	C	U
Xylenes, Total	UNFI	10.000	ug/L	C	U		NA				UNFI	10.000	ug/L	C	U
cis-1,3-Dichloropropene	UNFI	10.000	ug/L	C	U		NA				UNFI	10.000	ug/L	C	U
trans-1,3-Dichloropropene	UNFI	10.000	ug/L	C	U		NA				UNFI	10.000	ug/L	C	U
Semivolatile Organics															
1,2,4-Trichlorobenzene	UNFI	10.000	ug/L	C	U		NA				UNFI	10.000	ug/L	C	U
1,2-Dichlorobenzene	UNFI	10.000	ug/L	C	U		NA				UNFI	10.000	ug/L	C	U
1,3-Dichlorobenzene	UNFI	10.000	ug/L	C	U		NA				UNFI	10.000	ug/L	C	U
1,4-Dichlorobenzene	UNFI	10.000	ug/L	C	U		NA				UNFI	10.000	ug/L	C	U
2,4,5-Trichlorophenol	UNFI	25.000	ug/L	C	U		NA				UNFI	25.000	ug/L	C	U
2,4,6-Trichlorophenol	UNFI	10.000	ug/L	C	U		NA				UNFI	10.000	ug/L	C	U
2,4-Dichlorophenol	UNFI	10.000	ug/L	C	U		NA				UNFI	10.000	ug/L	C	U
2,4-Dimethylphenol	UNFI	10.000	ug/L	C	U		NA				UNFI	10.000	ug/L	C	U
2,4-Dinitrophenol	UNFI	25.000	ug/L	C	UJ		NA				UNFI	25.000	ug/L	C	R
2,4-Dinitrotoluene	UNFI	10.000	ug/L	C	U		NA				UNFI	10.000	ug/L	C	U
2,6-Dinitrotoluene	UNFI	10.000	ug/L	C	U		NA				UNFI	10.000	ug/L	C	U
2-Benzyl-4-chlorophenol	UNFI	10.000	ug/L	C	UJ		NA					NA			
2-Chloronaphthalene	UNFI	10.000	ug/L	C	U		NA				UNFI	10.000	ug/L	C	U
2-Chlorophenol	UNFI	10.000	ug/L	C	U		NA				UNFI	10.000	ug/L	C	U
2-Methylnaphthalene	UNFI	10.000	ug/L	C	U		NA				UNFI	10.000	ug/L	C	U
2-Methylphenol	UNFI	10.000	ug/L	C	U		NA				UNFI	10.000	ug/L	C	U
2-Nitroaniline	UNFI	25.000	ug/L	C	UJ		NA				UNFI	25.000	ug/L	C	U
2-Nitrophenol	UNFI	10.000	ug/L	C	U		NA				UNFI	10.000	ug/L	C	U

TABLE D-11A
(Continued)

PHASE II - CHEMICAL PARAMETERS

BORING NUMBER		1940					1940					2042			
SAMPLE NUMBER		114784					114785					110989			
SAMPLING DATE		06/11/93					06/11/93					05/04/93			
CHEMICAL PARAMETERS	FLTD	RESULTS	UNITS	L	VQ	FLTD	RESULTS	UNITS	L	VQ	FLTD	RESULTS	UNITS	L	VQ
Semivolatile Organics															
3,3'-Dichlorobenzidine	UNFI	10.000	ug/L	C	U		NA				UNFI	10.000	ug/L	C	U
3-Nitroaniline	UNFI	25.000	ug/L	C	U		NA				UNFI	25.000	ug/L	C	U
4,6-Dinitro-2-methylphenol	UNFI	25.000	ug/L	C	UJ		NA				UNFI	25.000	ug/L	C	UJ
4-Bromophenyl phenyl ether	UNFI	10.000	ug/L	C	U		NA				UNFI	10.000	ug/L	C	U
4-Chloro-3-methylphenol	UNFI	10.000	ug/L	C	U		NA				UNFI	10.000	ug/L	C	U
4-Chlorophenylphenyl ether	UNFI	10.000	ug/L	C	U		NA				UNFI	10.000	ug/L	C	U
4-Methylphenol	UNFI	10.000	ug/L	C	U		NA				UNFI	10.000	ug/L	C	U
4-Nitroaniline	UNFI	25.000	ug/L	C	UJ		NA				UNFI	25.000	ug/L	C	U
4-Nitrophenol	UNFI	25.000	ug/L	C	U		NA				UNFI	25.000	ug/L	C	UJ
Acenaphthene	UNFI	10.000	ug/L	C	U		NA				UNFI	10.000	ug/L	C	U
Acenaphthylene	UNFI	10.000	ug/L	C	U		NA				UNFI	10.000	ug/L	C	U
Anthracene	UNFI	10.000	ug/L	C	U		NA				UNFI	10.000	ug/L	C	U
Benzo(a)anthracene	UNFI	10.000	ug/L	C	U		NA				UNFI	10.000	ug/L	C	U
Benzo(a)pyrene	UNFI	10.000	ug/L	C	U		NA				UNFI	10.000	ug/L	C	U
Benzo(b)fluoranthene	UNFI	10.000	ug/L	C	U		NA				UNFI	10.000	ug/L	C	U
Benzo(g,h,i)perylene	UNFI	10.000	ug/L	C	U		NA				UNFI	10.000	ug/L	C	U
Benzo(k)fluoranthene	UNFI	10.000	ug/L	C	U		NA				UNFI	10.000	ug/L	C	U
Benzoic acid	UNFI	50.000	ug/L	C	U		NA				UNFI	50.000	ug/L	C	R
Benzyl alcohol	UNFI	10.000	ug/L	C	R		NA				UNFI	10.000	ug/L	C	UJ
Butyl benzyl phthalate	UNFI	10.000	ug/L	C	U		NA				UNFI	10.000	ug/L	C	U
Carbazole	UNFI	10.000	ug/L	C	U		NA				UNFI	10.000	ug/L	C	U
Chrysene	UNFI	10.000	ug/L	C	U		NA				UNFI	10.000	ug/L	C	U
Di-n-butyl phthalate	UNFI	10.000	ug/L	C	U		NA				UNFI	10.000	ug/L	C	U
Di-n-octyl phthalate	UNFI	10.000	ug/L	C	U		NA				UNFI	10.000	ug/L	C	R
Dibenzo(a,h)anthracene	UNFI	10.000	ug/L	C	U		NA				UNFI	10.000	ug/L	C	UJ
Dibenzofuran	UNFI	10.000	ug/L	C	U		NA				UNFI	10.000	ug/L	C	U
Diethyl phthalate	UNFI	10.000	ug/L	C	U		NA				UNFI	10.000	ug/L	C	U
Dimethyl phthalate	UNFI	10.000	ug/L	C	U		NA				UNFI	10.000	ug/L	C	U
Fluoranthene	UNFI	10.000	ug/L	C	U		NA				UNFI	10.000	ug/L	C	U
Fluorene	UNFI	10.000	ug/L	C	U		NA				UNFI	10.000	ug/L	C	U
Hexachlorobenzene	UNFI	10.000	ug/L	C	U		NA				UNFI	10.000	ug/L	C	U
Hexachlorobutadiene	UNFI	10.000	ug/L	C	UJ		NA				UNFI	10.000	ug/L	C	U
Hexachlorocyclopentadiene	UNFI	10.000	ug/L	C	U		NA				UNFI	10.000	ug/L	C	U
Hexachloroethane	UNFI	10.000	ug/L	C	U		NA				UNFI	10.000	ug/L	C	U
Indeno(1,2,3-cd)pyrene	UNFI	10.000	ug/L	C	U		NA				UNFI	10.000	ug/L	C	U
Isophorone	UNFI	10.000	ug/L	C	U		NA				UNFI	10.000	ug/L	C	U
N-Nitroso-di-n-propylamine	UNFI	10.000	ug/L	C	UJ		NA				UNFI	10.000	ug/L	C	U
N-Nitrosodimethylamine	UNFI	10.000	ug/L	C	UJ		NA					NA			
N-Nitrosodiphenylamine	UNFI	10.000	ug/L	C	U		NA				UNFI	10.000	ug/L	C	U
Naphthalene	UNFI	10.000	ug/L	C	U		NA				UNFI	10.000	ug/L	C	U
Nitrobenzene	UNFI	10.000	ug/L	C	U		NA				UNFI	10.000	ug/L	C	U
Pentachlorophenol	UNFI	25.000	ug/L	C	UJ		NA				UNFI	25.000	ug/L	C	U

000508

TABLE D-11A
(Continued)

PHASE II - CHEMICAL PARAMETERS

BORING NUMBER	1940					1940					2042				
SAMPLE NUMBER	114784					114785					110989				
SAMPLING DATE	06/11/93					06/11/93					05/04/93				
CHEMICAL PARAMETERS	FLTD	RESULTS	UNITS	L	VQ	FLTD	RESULTS	UNITS	L	VQ	FLTD	RESULTS	UNITS	L	VQ
Semivolatile Organics															
Phenanthrene	UNFI	10.000	ug/L	C	U		NA				UNFI	10.000	ug/L	C	U
Phenol	UNFI	10.000	ug/L	C	U		NA				UNFI	10.000	ug/L	C	U
Pyrene	UNFI	10.000	ug/L	C	U		NA				UNFI	10.000	ug/L	C	U
Tributyl phosphate	UNFI	10.000	ug/L	C	U		NA					NA			
bis(2-Chloroethoxy)methane	UNFI	10.000	ug/L	C	U		NA				UNFI	10.000	ug/L	C	U
bis(2-Chloroethyl)ether	UNFI	10.000	ug/L	C	U		NA				UNFI	10.000	ug/L	C	U
bis(2-Chloroisopropyl) ether	UNFI	10.000	ug/L	C	U		NA				UNFI	10.000	ug/L	C	U
bis(2-Ethylhexyl) phthalate	UNFI	10.000	ug/L	C	U		NA				UNFI	10.000	ug/L	C	UJ
p-Chloroaniline	UNFI	10.000	ug/L	C	U		NA				UNFI	10.000	ug/L	C	U
Pesticide Organics/PCBs															
4,4'-DDD	UNFI	0.100	ug/L	C	U		NA				UNFI	0.100	ug/L	C	U
4,4'-DDE	UNFI	0.100	ug/L	C	U		NA				UNFI	0.100	ug/L	C	U
4,4'-DDT	UNFI	0.100	ug/L	C	U		NA				UNFI	0.100	ug/L	C	UJ
Aldrin	UNFI	0.050	ug/L	C	U		NA				UNFI	0.050	ug/L	C	U
Aroclor-1016	UNFI	1.000	ug/L	C	UJ		NA				UNFI	1.000	ug/L	C	U
Aroclor-1221	UNFI	2.000	ug/L	C	UJ		NA				UNFI	2.000	ug/L	C	U
Aroclor-1232	UNFI	1.000	ug/L	C	UJ		NA				UNFI	1.000	ug/L	C	U
Aroclor-1242	UNFI	1.000	ug/L	C	UJ		NA				UNFI	1.000	ug/L	C	U
Aroclor-1248	UNFI	1.000	ug/L	C	UJ		NA				UNFI	1.000	ug/L	C	U
Aroclor-1254	UNFI	1.000	ug/L	C	UJ		NA				UNFI	1.000	ug/L	C	U
Aroclor-1260	UNFI	1.000	ug/L	C	UJ		NA				UNFI	1.000	ug/L	C	U
Dieldrin	UNFI	0.100	ug/L	C	U		NA				UNFI	0.100	ug/L	C	U
Endosulfan II	UNFI	0.100	ug/L	C	U		NA				UNFI	0.100	ug/L	C	U
Endosulfan sulfate	UNFI	0.100	ug/L	C	U		NA				UNFI	0.100	ug/L	C	U
Endosulfan-I	UNFI	0.050	ug/L	C	U		NA				UNFI	0.050	ug/L	C	U
Endrin	UNFI	0.100	ug/L	C	U		NA				UNFI	0.100	ug/L	C	U
Endrin aldehyde	UNFI	0.100	ug/L	C	UJ		NA				UNFI	0.100	ug/L	C	U
Endrin ketone	UNFI	0.100	ug/L	C	U		NA				UNFI	0.100	ug/L	C	U
Heptachlor	UNFI	0.050	ug/L	C	U		NA				UNFI	0.050	ug/L	C	U
Heptachlor epoxide	UNFI	0.050	ug/L	C	U		NA				UNFI	0.050	ug/L	C	U
Methoxychlor	UNFI	0.500	ug/L	C	U		NA				UNFI	0.500	ug/L	C	U
Toxaphene	UNFI	5.000	ug/L	C	UJ		NA				UNFI	5.000	ug/L	C	U
alpha-BHC	UNFI	0.050	ug/L	C	U		NA				UNFI	0.050	ug/L	C	UJ
alpha-Chlordane	UNFI	0.050	ug/L	C	U		NA				UNFI	0.050	ug/L	C	U
beta-BHC	UNFI	0.050	ug/L	C	U		NA				UNFI	0.050	ug/L	C	U
delta-BHC	UNFI	0.050	ug/L	C	UJ		NA				UNFI	0.050	ug/L	C	UJ
gamma-BHC (Lindane)	UNFI	0.050	ug/L	C	U		NA				UNFI	0.050	ug/L	C	UJ
gamma-Chlordane	UNFI	0.050	ug/L	C	U		NA				UNFI	0.050	ug/L	C	U
General Chemistry															
Alkalinity	UNFI	327.500	mg/L	B	-		NA				UNFI	255.500	mg/L	B	-

TABLE D-11A
(Continued)

PHASE II - CHEMICAL PARAMETERS

BORING NUMBER		1940					1940					2042			
SAMPLE NUMBER		114784					114785					110989			
SAMPLING DATE		06/11/93					06/11/93					05/04/93			
CHEMICAL PARAMETERS	FLTD	RESULTS	UNITS	L	VQ	FLTD	RESULTS	UNITS	L	VQ	FLTD	RESULTS	UNITS	L	VQ
General Chemistry															
Ammonia	UNFI	0.100	mg/L	B	U		NA				UNFI	0.100	mg/L	B	U
Chloride	UNFI	180.780	mg/L	B	-		NA				UNFI	18.820	mg/L	B	-
Fluoride	UNFI	0.280	mg/L	B	-		NA				UNFI	0.130	mg/L	B	-
Nitrate	UNFI	0.100	mg/L	B	R		NA				UNFI	1.460	mg/L	B	J
Phenols	UNFI	0.010	mg/L	B	U		NA				UNFI	0.010	mg/L	B	U
Sulfate	UNFI	147.500	mg/L	B	-		NA				UNFI	130.800	mg/L	B	-
Sulfide	UNFI	0.500	mg/L	B	U		NA				UNFI	0.500	mg/L	B	U
Total Kjeldahl Nitrogen	UNFI	0.380	mg/L	B	-		NA				UNFI	0.110	mg/L	B	-
Total Organic Carbon	UNFI	1.220	mg/L	B	-		NA				UNFI	1.000	mg/L	B	U
Total Organic Halides	UNFI	0.032	mg/L	B	J		NA				UNFI	0.010	mg/L	B	U
Total Organic Nitrogen	UNFI	0.380	mg/L	B	-		NA				UNFI	0.110	mg/L	B	-
Total Phosphorous	UNFI	0.700	mg/L	B	-		NA				UNFI	0.040	mg/L	B	-

000504

TABLE D-11A
(Continued)

PHASE II - CHEMICAL PARAMETERS

BORING NUMBER		2042					2042					2042			
SAMPLE NUMBER		110990					110994 DUPLICATE					110995 DUPLICATE			
SAMPLING DATE		05/04/93					05/04/93					05/04/93			
CHEMICAL PARAMETERS	FLTD	RESULTS	UNITS	L	VQ	FLTD	RESULTS	UNITS	L	VQ	FLTD	RESULTS	UNITS	L	VQ
Inorganics															
Aluminum		NA					NA					NA			
Aluminum	UNFI	0.075	mg/L	C	U	UNFI	0.114	mg/L	C	-	FILT	0.079	mg/L	C	U
Antimony		NA					NA					NA			
Antimony	UNFI	0.003	mg/L	C	UJ	UNFI	0.003	mg/L	C	UJ	FILT	0.004	mg/L	C	UJ
Arsenic		NA					NA					NA			
Arsenic	UNFI	0.001	mg/L	C	U	UNFI	0.001	mg/L	C	U	FILT	0.001	mg/L	C	U
Barium		NA					NA					NA			
Barium	UNFI	0.028	mg/L	C	-	UNFI	0.048	mg/L	C	-	FILT	0.038	mg/L	C	-
Beryllium		NA					NA					NA			
Beryllium	UNFI	0.001	mg/L	C	U	UNFI	0.001	mg/L	C	U	FILT	0.001	mg/L	C	U
Cadmium		NA					NA					NA			
Cadmium	UNFI	0.002	mg/L	C	U	UNFI	0.002	mg/L	C	U	FILT	0.002	mg/L	C	U
Calcium		NA					NA					NA			
Calcium	UNFI	118.000	mg/L	C	-	UNFI	117.000	mg/L	C	-	FILT	119.000	mg/L	C	-
Chromium		NA					NA					NA			
Chromium	UNFI	0.004	mg/L	C	U	UNFI	0.015	mg/L	C	-	FILT	0.004	mg/L	C	U
Cobalt		NA					NA					NA			
Cobalt	UNFI	0.003	mg/L	C	U	UNFI	0.004	mg/L	C	-	FILT	0.003	mg/L	C	U
Copper		NA					NA					NA			
Copper	UNFI	0.002	mg/L	C	U	UNFI	0.009	mg/L	C	U	FILT	0.005	mg/L	C	U
Cyanide	FILT	0.001	mg/L	C	R		NA					NA			
Cyanide		NA				UNFI	0.001	mg/L	C	U	FILT	0.001	mg/L	C	R
Iron		NA					NA					NA			
Iron	UNFI	0.098	mg/L	C	U	UNFI	4.720	mg/L	C	J	FILT	0.821	mg/L	C	-
Lead		NA					NA					NA			
Lead	UNFI	0.001	mg/L	C	U	UNFI	0.001	mg/L	C	U	FILT	0.001	mg/L	C	U
Magnesium		NA					NA					NA			
Magnesium	UNFI	26.900	mg/L	C	-	UNFI	25.900	mg/L	C	-	FILT	26.900	mg/L	C	-
Manganese		NA					NA					NA			
Manganese	UNFI	0.095	mg/L	C	-	UNFI	2.080	mg/L	C	J	FILT	0.459	mg/L	C	-
Mercury		NA					NA					NA			
Mercury	UNFI	0.000	mg/L	C	U	UNFI	0.000	mg/L	C	U	FILT	0.000	mg/L	C	U
Molybdenum		NA					NA					NA			
Molybdenum	UNFI	0.003	mg/L	C	U	UNFI	0.004	mg/L	C	U	FILT	0.003	mg/L	C	U
Nickel		NA					NA					NA			
Nickel	UNFI	0.003	mg/L	C	U	UNFI	0.004	mg/L	C	-	FILT	0.003	mg/L	C	U
Potassium		NA					NA					NA			
Potassium	UNFI	3.100	mg/L	C	-	UNFI	3.060	mg/L	C	-	FILT	3.160	mg/L	C	-
Selenium		NA					NA					NA			
Selenium	UNFI	0.001	mg/L	C	U	UNFI	0.001	mg/L	C	U	FILT	0.001	mg/L	C	U
Silicon		NA					NA					NA			
Silicon	UNFI	4.280	mg/L	C	-	UNFI	4.330	mg/L	C	-	FILT	4.270	mg/L	C	-

TABLE D-11A
(Continued)

PHASE II - CHEMICAL PARAMETERS

BORING NUMBER		2042					2042					2042			
SAMPLE NUMBER		110990					110994 DUPLICATE					110995 DUPLICATE			
SAMPLING DATE		05/04/93					05/04/93					05/04/93			
CHEMICAL PARAMETERS	FLTD	RESULTS	UNITS	L	VQ	FLTD	RESULTS	UNITS	L	VQ	FLTD	RESULTS	UNITS	L	VQ
Inorganics															
Silver		NA					NA				FILT	0.002	mg/L	C	U
Silver	UNFI	0.002	mg/L	C	U	UNFI	0.002	mg/L	C	U		NA			
Sodium		NA					NA				FILT	13.000	mg/L	C	-
Sodium	UNFI	13.100	mg/L	C	-	UNFI	12.800	mg/L	C	-		NA			
Thallium		NA					NA				FILT	0.001	mg/L	C	U
Thallium	UNFI	0.001	mg/L	C	U	UNFI	0.001	mg/L	C	U		NA			
Vanadium		NA					NA				FILT	0.007	mg/L	C	U
Vanadium	UNFI	0.008	mg/L	C	U	UNFI	0.009	mg/L	C	U		NA			
Zinc		NA					NA				FILT	0.007	mg/L	C	U
Zinc	UNFI	0.005	mg/L	C	U	UNFI	0.014	mg/L	C	U		NA			
Volatile Organics															
1,1,1-Trichloroethane		NA				UNFI	10.000	ug/L	C	U		NA			
1,1,2,2-Tetrachloroethane		NA				UNFI	10.000	ug/L	C	U		NA			
1,1,2-Trichloroethane		NA				UNFI	10.000	ug/L	C	U		NA			
1,1-Dichloroethane		NA				UNFI	10.000	ug/L	C	UJ		NA			
1,1-Dichloroethene		NA				UNFI	10.000	ug/L	C	U		NA			
1,2-Dichloroethane		NA				UNFI	10.000	ug/L	C	U		NA			
1,2-Dichloroethene		NA				UNFI	10.000	ug/L	C	U		NA			
1,2-Dichloropropane		NA				UNFI	10.000	ug/L	C	U		NA			
2-Butanone		NA				UNFI	10.000	ug/L	C	UJ		NA			
2-Hexanone		NA				UNFI	10.000	ug/L	C	U		NA			
4-Methyl-2-pentanone		NA				UNFI	10.000	ug/L	C	U		NA			
Acetone		NA				UNFI	2.000	ug/L	C	R		NA			
Benzene		NA				UNFI	10.000	ug/L	C	U		NA			
Bromodichloromethane		NA				UNFI	10.000	ug/L	C	U		NA			
Bromoform		NA				UNFI	10.000	ug/L	C	U		NA			
Bromomethane		NA				UNFI	10.000	ug/L	C	U		NA			
Carbon Tetrachloride		NA				UNFI	10.000	ug/L	C	U		NA			
Carbon disulfide		NA				UNFI	10.000	ug/L	C	UJ		NA			
Chlorobenzene		NA				UNFI	10.000	ug/L	C	U		NA			
Chloroethane		NA				UNFI	10.000	ug/L	C	UJ		NA			
Chloroform		NA				UNFI	10.000	ug/L	C	U		NA			
Chloromethane		NA				UNFI	10.000	ug/L	C	R		NA			
Dibromochloromethane		NA				UNFI	10.000	ug/L	C	U		NA			
Ethylbenzene		NA				UNFI	10.000	ug/L	C	U		NA			
Methylene chloride		NA				UNFI	10.000	ug/L	C	UJ		NA			
Styrene		NA				UNFI	10.000	ug/L	C	U		NA			
Tetrachloroethene		NA				UNFI	10.000	ug/L	C	U		NA			
Toluene		NA				UNFI	10.000	ug/L	C	U		NA			
Trichloroethene		NA				UNFI	10.000	ug/L	C	U		NA			

TABLE D-11A
(Continued)

PHASE II - CHEMICAL PARAMETERS

BORING NUMBER		2042				2042				2042			
SAMPLE NUMBER		110990				110994 DUPLICATE				110995 DUPLICATE			
SAMPLING DATE		05/04/93				05/04/93				05/04/93			
CHEMICAL PARAMETERS	FLTD	RESULTS	UNITS	L	VQ	FLTD	RESULTS	UNITS	L	VQ	FLTD	RESULTS	UNITS	L	VQ
Volatile Organics															
Vinyl Acetate		NA				UNFI	10.000	ug/L	C	UJ		NA			
Vinyl chloride		NA				UNFI	10.000	ug/L	C	UJ		NA			
Xylenes, Total		NA				UNFI	10.000	ug/L	C	U		NA			
cis-1,3-Dichloropropene		NA				UNFI	10.000	ug/L	C	U		NA			
trans-1,3-Dichloropropene		NA				UNFI	10.000	ug/L	C	U		NA			
Semivolatile Organics															
1,2,4-Trichlorobenzene		NA				UNFI	10.000	ug/L	C	U		NA			
1,2-Dichlorobenzene		NA				UNFI	10.000	ug/L	C	U		NA			
1,3-Dichlorobenzene		NA				UNFI	10.000	ug/L	C	U		NA			
1,4-Dichlorobenzene		NA				UNFI	10.000	ug/L	C	U		NA			
2,4,5-Trichlorophenol		NA				UNFI	25.000	ug/L	C	U		NA			
2,4,6-Trichlorophenol		NA				UNFI	10.000	ug/L	C	U		NA			
2,4-Dichlorophenol		NA				UNFI	10.000	ug/L	C	U		NA			
2,4-Dimethylphenol		NA				UNFI	10.000	ug/L	C	U		NA			
2,4-Dinitrophenol		NA				UNFI	25.000	ug/L	C	R		NA			
2,4-Dinitrotoluene		NA				UNFI	10.000	ug/L	C	U		NA			
2,6-Dinitrotoluene		NA				UNFI	10.000	ug/L	C	U		NA			
2-Chloronaphthalene		NA				UNFI	10.000	ug/L	C	U		NA			
2-Chlorophenol		NA				UNFI	10.000	ug/L	C	U		NA			
2-Methylnaphthalene		NA				UNFI	10.000	ug/L	C	U		NA			
2-Methylphenol		NA				UNFI	10.000	ug/L	C	U		NA			
2-Nitroaniline		NA				UNFI	25.000	ug/L	C	U		NA			
2-Nitrophenol		NA				UNFI	10.000	ug/L	C	U		NA			
3,3'-Dichlorobenzidine		NA				UNFI	10.000	ug/L	C	U		NA			
3-Nitroaniline		NA				UNFI	25.000	ug/L	C	U		NA			
4,6-Dinitro-2-methylphenol		NA				UNFI	25.000	ug/L	C	UJ		NA			
4-Bromophenyl phenyl ether		NA				UNFI	10.000	ug/L	C	U		NA			
4-Chloro-3-methylphenol		NA				UNFI	10.000	ug/L	C	U		NA			
4-Chlorophenylphenyl ether		NA				UNFI	10.000	ug/L	C	U		NA			
4-Methylphenol		NA				UNFI	10.000	ug/L	C	U		NA			
4-Nitroaniline		NA				UNFI	25.000	ug/L	C	U		NA			
4-Nitrophenol		NA				UNFI	25.000	ug/L	C	UJ		NA			
Acenaphthene		NA				UNFI	10.000	ug/L	C	U		NA			
Acenaphthylene		NA				UNFI	10.000	ug/L	C	U		NA			
Anthracene		NA				UNFI	10.000	ug/L	C	U		NA			
Benzo(a)anthracene		NA				UNFI	10.000	ug/L	C	U		NA			
Benzo(a)pyrene		NA				UNFI	10.000	ug/L	C	U		NA			
Benzo(b)fluoranthene		NA				UNFI	10.000	ug/L	C	U		NA			
Benzo(g,h,i)perylene		NA				UNFI	10.000	ug/L	C	U		NA			
Benzo(k)fluoranthene		NA				UNFI	10.000	ug/L	C	U		NA			

TABLE D-11A
(Continued)

PHASE II - CHEMICAL PARAMETERS

BORING NUMBER		2042				2042				2042			
SAMPLE NUMBER		110990				110994 DUPLICATE				110995 DUPLICATE			
SAMPLING DATE		05/04/93				05/04/93				05/04/93			
CHEMICAL PARAMETERS	FLTD	RESULTS	UNITS	L	VQ	FLTD	RESULTS	UNITS	L	VQ	FLTD	RESULTS	UNITS	L	VQ
Semivolatile Organics															
Benzoic acid		NA				UNFI	50.000	ug/L	C	R		NA			
Benzyl alcohol		NA				UNFI	10.000	ug/L	C	UJ		NA			
Butyl benzyl phthalate		NA				UNFI	10.000	ug/L	C	U		NA			
Carbazole		NA				UNFI	10.000	ug/L	C	U		NA			
Chrysene		NA				UNFI	10.000	ug/L	C	U		NA			
Di-n-butyl phthalate		NA				UNFI	10.000	ug/L	C	U		NA			
Di-n-octyl phthalate		NA				UNFI	10.000	ug/L	C	R		NA			
Dibenzo(a,h)anthracene		NA				UNFI	10.000	ug/L	C	UJ		NA			
Dibenzofuran		NA				UNFI	10.000	ug/L	C	U		NA			
Diethyl phthalate		NA				UNFI	10.000	ug/L	C	U		NA			
Dimethyl phthalate		NA				UNFI	10.000	ug/L	C	U		NA			
Fluoranthene		NA				UNFI	10.000	ug/L	C	U		NA			
Fluorene		NA				UNFI	10.000	ug/L	C	U		NA			
Hexachlorobenzene		NA				UNFI	10.000	ug/L	C	U		NA			
Hexachlorobutadiene		NA				UNFI	10.000	ug/L	C	U		NA			
Hexachlorocyclopentadiene		NA				UNFI	10.000	ug/L	C	U		NA			
Hexachloroethane		NA				UNFI	10.000	ug/L	C	U		NA			
Indeno(1,2,3-cd)pyrene		NA				UNFI	10.000	ug/L	C	U		NA			
Isophorone		NA				UNFI	10.000	ug/L	C	U		NA			
N-Nitroso-di-n-propylamine		NA				UNFI	10.000	ug/L	C	U		NA			
N-Nitrosodiphenylamine		NA				UNFI	10.000	ug/L	C	U		NA			
Naphthalene		NA				UNFI	10.000	ug/L	C	U		NA			
Nitrobenzene		NA				UNFI	10.000	ug/L	C	U		NA			
Pentachlorophenol		NA				UNFI	25.000	ug/L	C	U		NA			
Phenanthrene		NA				UNFI	10.000	ug/L	C	U		NA			
Phenol		NA				UNFI	10.000	ug/L	C	U		NA			
Pyrene		NA				UNFI	10.000	ug/L	C	U		NA			
bis(2-Chloroethoxy)methane		NA				UNFI	10.000	ug/L	C	U		NA			
bis(2-Chloroethyl)ether		NA				UNFI	10.000	ug/L	C	U		NA			
bis(2-Chloroisopropyl) ether		NA				UNFI	10.000	ug/L	C	U		NA			
bis(2-Ethylhexyl) phthalate		NA				UNFI	10.000	ug/L	C	UJ		NA			
p-Chloroaniline		NA				UNFI	10.000	ug/L	C	U		NA			
Pesticide Organics/PCBs															
4,4'-DDD		NA				UNFI	0.100	ug/L	C	U		NA			
4,4'-DDE		NA				UNFI	0.100	ug/L	C	U		NA			
4,4'-DDT		NA				UNFI	0.100	ug/L	C	UJ		NA			
Aldrin		NA				UNFI	0.050	ug/L	C	U		NA			
Aroclor-1016		NA				UNFI	1.000	ug/L	C	U		NA			
Aroclor-1221		NA				UNFI	2.000	ug/L	C	U		NA			
Aroclor-1232		NA				UNFI	1.000	ug/L	C	U		NA			

TABLE D-11A
(Continued)

PHASE II - CHEMICAL PARAMETERS

BORING NUMBER		2042				2042				2042			
SAMPLE NUMBER		110990				110994 DUPLICATE				110995 DUPLICATE			
SAMPLING DATE		05/04/93				05/04/93				05/04/93			
CHEMICAL PARAMETERS	FLTD	RESULTS	UNITS	L	VQ	FLTD	RESULTS	UNITS	L	VQ	FLTD	RESULTS	UNITS	L	VQ
Pesticide Organics/PCBs															
Aroclor-1242		NA				UNFI	1.000	ug/L	C	U		NA			
Aroclor-1248		NA				UNFI	1.000	ug/L	C	U		NA			
Aroclor-1254		NA				UNFI	1.000	ug/L	C	U		NA			
Aroclor-1260		NA				UNFI	1.000	ug/L	C	U		NA			
Dieldrin		NA				UNFI	0.100	ug/L	C	U		NA			
Endosulfan II		NA				UNFI	0.100	ug/L	C	U		NA			
Endosulfan sulfate		NA				UNFI	0.100	ug/L	C	U		NA			
Endosulfan-I		NA				UNFI	0.050	ug/L	C	U		NA			
Endrin		NA				UNFI	0.100	ug/L	C	U		NA			
Endrin aldehyde		NA				UNFI	0.100	ug/L	C	U		NA			
Endrin ketone		NA				UNFI	0.100	ug/L	C	U		NA			
Heptachlor		NA				UNFI	0.050	ug/L	C	U		NA			
Heptachlor epoxide		NA				UNFI	0.050	ug/L	C	U		NA			
Methoxychlor		NA				UNFI	0.500	ug/L	C	U		NA			
Toxaphene		NA				UNFI	5.000	ug/L	C	U		NA			
alpha-BHC		NA				UNFI	0.050	ug/L	C	UJ		NA			
alpha-Chlordane		NA				UNFI	0.050	ug/L	C	U		NA			
beta-BHC		NA				UNFI	0.050	ug/L	C	U		NA			
delta-BHC		NA				UNFI	0.050	ug/L	C	UJ		NA			
gamma-BHC (Lindane)		NA				UNFI	0.050	ug/L	C	UJ		NA			
gamma-Chlordane		NA				UNFI	0.050	ug/L	C	U		NA			
General Chemistry															
Alkalinity		NA				UNFI	258.000	mg/L	B	-		NA			
Ammonia		NA				UNFI	0.100	mg/L	B	U		NA			
Chloride		NA				UNFI	18.870	mg/L	B	-		NA			
Fluoride		NA				UNFI	0.130	mg/L	B	-		NA			
Nitrate		NA				UNFI	1.300	mg/L	B	J		NA			
Phenols		NA				UNFI	0.010	mg/L	B	U		NA			
Sulfate		NA				UNFI	135.500	mg/L	B	-		NA			
Sulfide		NA				UNFI	0.500	mg/L	B	U		NA			
Total Kjeldahl Nitrogen		NA				UNFI	0.100	mg/L	B	U		NA			
Total Organic Carbon		NA				UNFI	1.000	mg/L	B	U		NA			
Total Organic Halides		NA				UNFI	0.010	mg/L	B	R		NA			
Total Organic Nitrogen		NA				UNFI	0.100	mg/L	B	U		NA			
Total Phosphorous		NA				UNFI	0.020	mg/L	B	U		NA			

TABLE D-11A
(Continued)

PHASE II - CHEMICAL PARAMETERS

BORING NUMBER	2935					2936					2936				
SAMPLE NUMBER	114921					114788					114789 DUPLICATE				
SAMPLING DATE	06/13/93					06/12/93					06/12/93				
CHEMICAL PARAMETERS	FLTD	RESULTS	UNITS	L	VQ	FLTD	RESULTS	UNITS	L	VQ	FLTD	RESULTS	UNITS	L	VQ
Inorganics															
Aluminum	FILT	0.049	mg/L	C	-		NA					NA			
Aluminum	UNFI	0.260	mg/L	C	-	UNFI	0.030	mg/L	C	U	UNFI	0.100	mg/L	C	-
Antimony	FILT	0.059	mg/L	C	U		NA					NA			
Antimony	UNFI	0.059	mg/L	C	U	UNFI	0.059	mg/L	C	U	UNFI	0.059	mg/L	C	U
Arsenic	FILT	0.001	mg/L	C	-		NA					NA			
Arsenic	UNFI	0.001	mg/L	C	U	UNFI	0.001	mg/L	C	-	UNFI	0.001	mg/L	C	-
Barium	FILT	0.070	mg/L	C	-		NA					NA			
Barium	UNFI	0.069	mg/L	C	-	UNFI	0.065	mg/L	C	-	UNFI	0.063	mg/L	C	-
Beryllium	FILT	0.001	mg/L	C	U		NA					NA			
Beryllium	UNFI	0.001	mg/L	C	U	UNFI	0.001	mg/L	C	U	UNFI	0.001	mg/L	C	U
Cadmium	FILT	0.003	mg/L	C	U		NA					NA			
Cadmium	UNFI	0.003	mg/L	C	U	UNFI	0.003	mg/L	C	U	UNFI	0.003	mg/L	C	U
Calcium	FILT	106.000	mg/L	C	-		NA					NA			
Calcium	UNFI	106.000	mg/L	C	-	UNFI	109.000	mg/L	C	-	UNFI	109.000	mg/L	C	-
Chromium	FILT	0.005	mg/L	C	U		NA					NA			
Chromium	UNFI	0.005	mg/L	C	U	UNFI	0.005	mg/L	C	U	UNFI	0.005	mg/L	C	U
Cobalt	FILT	0.004	mg/L	C	U		NA					NA			
Cobalt	UNFI	0.004	mg/L	C	U	UNFI	0.004	mg/L	C	U	UNFI	0.004	mg/L	C	U
Copper	FILT	0.005	mg/L	C	-		NA					NA			
Copper	UNFI	0.003	mg/L	C	U	UNFI	0.003	mg/L	C	U	UNFI	0.003	mg/L	C	U
Cyanide	UNFI	0.002	mg/L	C	U	UNFI	0.002	mg/L	C	R		NA			
Iron	FILT	2.060	mg/L	C	-		NA					NA			
Iron	UNFI	2.320	mg/L	C	-	UNFI	1.140	mg/L	C	-	UNFI	1.110	mg/L	C	-
Lead	FILT	0.001	mg/L	C	U		NA					NA			
Lead	UNFI	0.002	mg/L	C	U	UNFI	0.001	mg/L	C	U	UNFI	0.001	mg/L	C	U
Magnesium	FILT	26.700	mg/L	C	-		NA					NA			
Magnesium	UNFI	26.600	mg/L	C	-	UNFI	27.000	mg/L	C	-	UNFI	26.900	mg/L	C	-
Manganese	FILT	0.348	mg/L	C	-		NA					NA			
Manganese	UNFI	0.351	mg/L	C	-	UNFI	0.455	mg/L	C	-	UNFI	0.468	mg/L	C	-
Mercury	FILT	0.000	mg/L	C	UJ		NA					NA			
Mercury	UNFI	0.000	mg/L	C	UJ	UNFI	0.000	mg/L	C	UJ	UNFI	0.000	mg/L	C	UJ
Molybdenum	FILT	0.007	mg/L	C	-		NA					NA			
Molybdenum	UNFI	0.007	mg/L	C	-	UNFI	0.007	mg/L	C	U	UNFI	0.007	mg/L	C	U
Nickel	FILT	0.021	mg/L	C	U		NA					NA			
Nickel	UNFI	0.021	mg/L	C	U	UNFI	0.021	mg/L	C	U	UNFI	0.021	mg/L	C	U
Potassium	FILT	2.980	mg/L	C	U		NA					NA			
Potassium	UNFI	2.980	mg/L	C	U	UNFI	2.980	mg/L	C	U	UNFI	2.980	mg/L	C	U
Selenium	FILT	0.001	mg/L	C	UJ		NA					NA			
Selenium	UNFI	0.001	mg/L	C	UJ	UNFI	0.001	mg/L	C	UJ	UNFI	0.001	mg/L	C	UJ
Silicon	FILT	5.240	mg/L	C	-		NA					NA			
Silicon	UNFI	5.710	mg/L	C	-	UNFI	5.020	mg/L	C	-	UNFI	5.210	mg/L	C	-
Silver	FILT	0.004	mg/L	C	U		NA					NA			

000310

TABLE D-11A
(Continued)

PHASE II - CHEMICAL PARAMETERS

BORING NUMBER		2935					2936					2936			
SAMPLE NUMBER		114921					114788					114789 DUPLICATE			
SAMPLING DATE		06/13/93					06/12/93					06/12/93			
CHEMICAL PARAMETERS	FLTD	RESULTS	UNITS	L	VQ	FLTD	RESULTS	UNITS	L	VQ	FLTD	RESULTS	UNITS	L	VQ
Inorganics															
Silver	UNFI	0.004	mg/L	C	U	UNFI	0.004	mg/L	C	U	UNFI	0.004	mg/L	C	U
Sodium	FILT	16.700	mg/L	C	-		NA					NA			
Sodium	UNFI	16.500	mg/L	C	-	UNFI	16.600	mg/L	C	-	UNFI	16.400	mg/L	C	-
Thallium	FILT	0.001	mg/L	C	U		NA					NA			
Thallium	UNFI	0.001	mg/L	C	U	UNFI	0.001	mg/L	C	U	UNFI	0.001	mg/L	C	U
Vanadium	FILT	0.002	mg/L	C	U		NA					NA			
Vanadium	UNFI	0.002	mg/L	C	U	UNFI	0.002	mg/L	C	U	UNFI	0.002	mg/L	C	U
Zinc	FILT	0.034	mg/L	C	-		NA					NA			
Zinc	UNFI	0.023	mg/L	C	U	UNFI	0.010	mg/L	C	U	UNFI	0.016	mg/L	C	U
Volatile Organics															
1,1,1-Trichloroethane	UNFI	10.000	ug/L	C	U	UNFI	10.000	ug/L	C	U		NA			
1,1,2,2-Tetrachloroethane	UNFI	10.000	ug/L	C	U	UNFI	10.000	ug/L	C	U		NA			
1,1,2-Trichloroethane	UNFI	10.000	ug/L	C	U	UNFI	10.000	ug/L	C	U		NA			
1,1-Dichloroethane	UNFI	10.000	ug/L	C	U	UNFI	10.000	ug/L	C	U		NA			
1,1-Dichloroethene	UNFI	10.000	ug/L	C	U	UNFI	10.000	ug/L	C	U		NA			
1,2-Dichloroethane	UNFI	10.000	ug/L	C	U	UNFI	10.000	ug/L	C	U		NA			
1,2-Dichloroethene	UNFI	10.000	ug/L	C	U	UNFI	10.000	ug/L	C	U		NA			
1,2-Dichloropropane	UNFI	10.000	ug/L	C	U	UNFI	10.000	ug/L	C	U		NA			
2-Butanone	UNFI	10.000	ug/L	C	UJ	UNFI	10.000	ug/L	C	UJ		NA			
2-Hexanone	UNFI	10.000	ug/L	C	UJ	UNFI	10.000	ug/L	C	UJ		NA			
4-Methyl-2-pentanone	UNFI	10.000	ug/L	C	R	UNFI	10.000	ug/L	C	R		NA			
Acetone	UNFI	10.000	ug/L	C	UJ	UNFI	10.000	ug/L	C	UJ		NA			
Benzene	UNFI	10.000	ug/L	C	U	UNFI	10.000	ug/L	C	U		NA			
Bromochloromethane	UNFI	10.000	ug/L	C	U		NA					NA			
Bromodichloromethane		NA				UNFI	10.000	ug/L	C	U		NA			
Bromoform	UNFI	10.000	ug/L	C	U	UNFI	10.000	ug/L	C	U		NA			
Bromomethane	UNFI	10.000	ug/L	C	U	UNFI	10.000	ug/L	C	U		NA			
Carbon Tetrachloride	UNFI	10.000	ug/L	C	U	UNFI	10.000	ug/L	C	U		NA			
Carbon disulfide	UNFI	10.000	ug/L	C	U	UNFI	10.000	ug/L	C	U		NA			
Chlorobenzene	UNFI	10.000	ug/L	C	U	UNFI	10.000	ug/L	C	U		NA			
Chloroethane	UNFI	10.000	ug/L	C	U	UNFI	10.000	ug/L	C	U		NA			
Chloroform	UNFI	10.000	ug/L	C	U	UNFI	10.000	ug/L	C	U		NA			
Chloromethane	UNFI	10.000	ug/L	C	U	UNFI	10.000	ug/L	C	U		NA			
Dibromochloromethane	UNFI	10.000	ug/L	C	U	UNFI	10.000	ug/L	C	U		NA			
Ethylbenzene	UNFI	10.000	ug/L	C	U	UNFI	10.000	ug/L	C	U		NA			
Methylene chloride	UNFI	10.000	ug/L	C	U	UNFI	10.000	ug/L	C	U		NA			
Styrene	UNFI	10.000	ug/L	C	U	UNFI	10.000	ug/L	C	U		NA			
Tetrachloroethene	UNFI	10.000	ug/L	C	U	UNFI	10.000	ug/L	C	U		NA			
Toluene	UNFI	10.000	ug/L	C	U	UNFI	10.000	ug/L	C	U		NA			
Trichloroethene	UNFI	10.000	ug/L	C	U	UNFI	10.000	ug/L	C	U		NA			

000311

6508

TABLE D-11A
(Continued)

PHASE II - CHEMICAL PARAMETERS

BORING NUMBER	2935					2936					2936			
SAMPLE NUMBER	114921					114788					114789 DUPLICATE			
SAMPLING DATE	06/13/93					06/12/93					06/12/93			
CHEMICAL PARAMETERS	FLTD	RESULTS	UNITS	L	VQ	FLTD	RESULTS	UNITS	L	VQ	FLTD	RESULTS	UNITS	L	VQ
Volatile Organics															
Vinyl chloride	UNFI	10.000	ug/L	C	U	UNFI	10.000	ug/L	C	U		NA			
Xylenes, Total	UNFI	10.000	ug/L	C	U	UNFI	10.000	ug/L	C	U		NA			
cis-1,3-Dichloropropene	UNFI	10.000	ug/L	C	U	UNFI	10.000	ug/L	C	U		NA			
trans-1,3-Dichloropropene	UNFI	10.000	ug/L	C	U	UNFI	10.000	ug/L	C	U		NA			
Semivolatile Organics															
1,2,4-Trichlorobenzene	UNFI	10.000	ug/L	C	U	UNFI	10.000	ug/L	C	U		NA			
1,2-Dichlorobenzene	UNFI	10.000	ug/L	C	U	UNFI	10.000	ug/L	C	U		NA			
1,3-Dichlorobenzene	UNFI	10.000	ug/L	C	U	UNFI	10.000	ug/L	C	U		NA			
1,4-Dichlorobenzene	UNFI	10.000	ug/L	C	U	UNFI	10.000	ug/L	C	U		NA			
2,4,5-Trichlorophenol	UNFI	25.000	ug/L	C	U	UNFI	25.000	ug/L	C	U		NA			
2,4,6-Trichlorophenol	UNFI	10.000	ug/L	C	U	UNFI	10.000	ug/L	C	U		NA			
2,4-Dichlorophenol	UNFI	10.000	ug/L	C	U	UNFI	10.000	ug/L	C	U		NA			
2,4-Dimethylphenol	UNFI	10.000	ug/L	C	U	UNFI	10.000	ug/L	C	U		NA			
2,4-Dinitrophenol	UNFI	25.000	ug/L	C	UJ	UNFI	25.000	ug/L	C	UJ		NA			
2,4-Dinitrotoluene	UNFI	10.000	ug/L	C	U	UNFI	10.000	ug/L	C	U		NA			
2,6-Dinitrotoluene	UNFI	10.000	ug/L	C	U	UNFI	10.000	ug/L	C	U		NA			
2-Benzyl-4-chlorophenol	UNFI	10.000	ug/L	C	UJ	UNFI	10.000	ug/L	C	UJ		NA			
2-Chloronaphthalene	UNFI	10.000	ug/L	C	U	UNFI	10.000	ug/L	C	U		NA			
2-Chlorophenol	UNFI	10.000	ug/L	C	U	UNFI	10.000	ug/L	C	U		NA			
2-Methylnaphthalene	UNFI	10.000	ug/L	C	U	UNFI	10.000	ug/L	C	U		NA			
2-Methylphenol	UNFI	10.000	ug/L	C	U	UNFI	10.000	ug/L	C	U		NA			
2-Nitroaniline	UNFI	25.000	ug/L	C	UJ	UNFI	25.000	ug/L	C	UJ		NA			
2-Nitrophenol	UNFI	10.000	ug/L	C	U	UNFI	10.000	ug/L	C	U		NA			
3,3'-Dichlorobenzidine	UNFI	10.000	ug/L	C	U	UNFI	10.000	ug/L	C	U		NA			
3-Nitroaniline	UNFI	25.000	ug/L	C	U	UNFI	25.000	ug/L	C	U		NA			
4,6-Dinitro-2-methylphenol	UNFI	25.000	ug/L	C	UJ	UNFI	25.000	ug/L	C	UJ		NA			
4-Bromophenyl phenyl ether	UNFI	10.000	ug/L	C	U	UNFI	10.000	ug/L	C	U		NA			
4-Chloro-3-methylphenol	UNFI	10.000	ug/L	C	U	UNFI	10.000	ug/L	C	U		NA			
4-Chlorophenylphenyl ether	UNFI	10.000	ug/L	C	U	UNFI	10.000	ug/L	C	U		NA			
4-Methylphenol	UNFI	10.000	ug/L	C	U	UNFI	10.000	ug/L	C	U		NA			
4-Nitroaniline	UNFI	25.000	ug/L	C	UJ	UNFI	25.000	ug/L	C	UJ		NA			
4-Nitrophenol	UNFI	25.000	ug/L	C	U	UNFI	25.000	ug/L	C	U		NA			
Acenaphthene	UNFI	10.000	ug/L	C	U	UNFI	10.000	ug/L	C	U		NA			
Acenaphthylene	UNFI	10.000	ug/L	C	U	UNFI	10.000	ug/L	C	U		NA			
Anthracene	UNFI	10.000	ug/L	C	U	UNFI	10.000	ug/L	C	U		NA			
Benzo(a)anthracene	UNFI	10.000	ug/L	C	U	UNFI	10.000	ug/L	C	U		NA			
Benzo(a)pyrene	UNFI	10.000	ug/L	C	U	UNFI	10.000	ug/L	C	U		NA			
Benzo(b)fluoranthene	UNFI	10.000	ug/L	C	U	UNFI	10.000	ug/L	C	U		NA			
Benzo(g,h,i)perylene	UNFI	10.000	ug/L	C	U	UNFI	10.000	ug/L	C	U		NA			
Benzo(k)fluoranthene	UNFI	10.000	ug/L	C	U	UNFI	10.000	ug/L	C	U		NA			

000212

TABLE D-11A
(Continued)

PHASE II - CHEMICAL PARAMETERS

BORING NUMBER		2935					2936					2936		
SAMPLE NUMBER		114921					114788					114789 DUPLICATE		
SAMPLING DATE		06/13/93					06/12/93					06/12/93		
CHEMICAL PARAMETERS	FLTD	RESULTS	UNITS	L	VQ	FLTD	RESULTS	UNITS	L	VQ	FLTD	RESULTS	UNITS	L	VQ
Semivolatile Organics															
Benzoic acid	UNFI	50.000	ug/L	C	U	UNFI	50.000	ug/L	C	U		NA			
Benzyl alcohol	UNFI	10.000	ug/L	C	R	UNFI	10.000	ug/L	C	R		NA			
Butyl benzyl phthalate	UNFI	2.000	ug/L	C	J	UNFI	2.000	ug/L	C	J		NA			
Carbazole	UNFI	10.000	ug/L	C	U	UNFI	10.000	ug/L	C	U		NA			
Chrysene	UNFI	10.000	ug/L	C	U	UNFI	10.000	ug/L	C	U		NA			
Di-n-butyl phthalate	UNFI	10.000	ug/L	C	U	UNFI	10.000	ug/L	C	U		NA			
Di-n-octyl phthalate	UNFI	10.000	ug/L	C	U	UNFI	10.000	ug/L	C	U		NA			
Dibenzo(a,h)anthracene	UNFI	10.000	ug/L	C	U	UNFI	10.000	ug/L	C	U		NA			
Dibenzofuran	UNFI	10.000	ug/L	C	U	UNFI	10.000	ug/L	C	U		NA			
Diethyl phthalate	UNFI	10.000	ug/L	C	U	UNFI	10.000	ug/L	C	U		NA			
Dimethyl phthalate	UNFI	10.000	ug/L	C	U	UNFI	10.000	ug/L	C	U		NA			
Fluoranthene	UNFI	10.000	ug/L	C	U	UNFI	10.000	ug/L	C	U		NA			
Fluorene	UNFI	10.000	ug/L	C	U	UNFI	10.000	ug/L	C	U		NA			
Hexachlorobenzene	UNFI	10.000	ug/L	C	U	UNFI	10.000	ug/L	C	U		NA			
Hexachlorobutadiene	UNFI	10.000	ug/L	C	UJ	UNFI	10.000	ug/L	C	UJ		NA			
Hexachlorocyclopentadiene	UNFI	10.000	ug/L	C	U	UNFI	10.000	ug/L	C	U		NA			
Hexachloroethane	UNFI	10.000	ug/L	C	U	UNFI	10.000	ug/L	C	U		NA			
Indeno(1,2,3-cd)pyrene	UNFI	10.000	ug/L	C	U	UNFI	10.000	ug/L	C	U		NA			
Isophorone	UNFI	10.000	ug/L	C	U	UNFI	10.000	ug/L	C	U		NA			
N-Nitroso-di-n-propylamine	UNFI	10.000	ug/L	C	UJ	UNFI	10.000	ug/L	C	UJ		NA			
N-Nitrosodimethylamine	UNFI	10.000	ug/L	C	UJ	UNFI	10.000	ug/L	C	UJ		NA			
N-Nitrosodiphenylamine	UNFI	10.000	ug/L	C	U	UNFI	10.000	ug/L	C	U		NA			
Naphthalene	UNFI	10.000	ug/L	C	U	UNFI	10.000	ug/L	C	U		NA			
Nitrobenzene	UNFI	10.000	ug/L	C	U	UNFI	10.000	ug/L	C	U		NA			
Pentachlorophenol	UNFI	25.000	ug/L	C	UJ	UNFI	25.000	ug/L	C	UJ		NA			
Phenanthrene	UNFI	10.000	ug/L	C	U	UNFI	10.000	ug/L	C	U		NA			
Phenol	UNFI	10.000	ug/L	C	U	UNFI	10.000	ug/L	C	U		NA			
Pyrene	UNFI	10.000	ug/L	C	U	UNFI	10.000	ug/L	C	U		NA			
Tributyl phosphate	UNFI	10.000	ug/L	C	U	UNFI	10.000	ug/L	C	U		NA			
bis(2-Chloroethoxy)methane	UNFI	10.000	ug/L	C	U	UNFI	10.000	ug/L	C	U		NA			
bis(2-Chloroethyl)ether	UNFI	10.000	ug/L	C	U	UNFI	10.000	ug/L	C	U		NA			
bis(2-Chloroisopropyl) ether	UNFI	10.000	ug/L	C	U	UNFI	10.000	ug/L	C	U		NA			
bis(2-Ethylhexyl) phthalate	UNFI	10.000	ug/L	C	U	UNFI	10.000	ug/L	C	U		NA			
p-Chloroaniline	UNFI	10.000	ug/L	C	U	UNFI	10.000	ug/L	C	U		NA			
Pesticide Organics/PCBs															
4,4'-DDD	UNFI	0.100	ug/L	C	U	UNFI	0.100	ug/L	C	U		NA			
4,4'-DDE	UNFI	0.100	ug/L	C	U	UNFI	0.100	ug/L	C	U		NA			
4,4'-DDT	UNFI	0.100	ug/L	C	U	UNFI	0.100	ug/L	C	U		NA			
Aldrin	UNFI	0.050	ug/L	C	U	UNFI	0.050	ug/L	C	U		NA			
Aroclor-1016	UNFI	1.000	ug/L	C	U	UNFI	1.000	ug/L	C	U		NA			

TABLE D-11A
(Continued)

PHASE II - CHEMICAL PARAMETERS

BORING NUMBER		2935					2936					2936			
SAMPLE NUMBER		114921					114788					114789 DUPLICATE			
SAMPLING DATE		06/13/93					06/12/93					06/12/93			
CHEMICAL PARAMETERS	FLTD	RESULTS	UNITS	L	VQ	FLTD	RESULTS	UNITS	L	VQ	FLTD	RESULTS	UNITS	L	VQ
Pesticide Organics/PCBs															
Aroclor-1221	UNFI	2.000	ug/L	C	U	UNFI	2.000	ug/L	C	U		NA			
Aroclor-1232	UNFI	1.000	ug/L	C	U	UNFI	1.000	ug/L	C	U		NA			
Aroclor-1242	UNFI	1.000	ug/L	C	U	UNFI	1.000	ug/L	C	U		NA			
Aroclor-1248	UNFI	1.000	ug/L	C	U	UNFI	1.000	ug/L	C	U		NA			
Aroclor-1254	UNFI	1.000	ug/L	C	U	UNFI	1.000	ug/L	C	U		NA			
Aroclor-1260	UNFI	1.000	ug/L	C	U	UNFI	1.000	ug/L	C	U		NA			
Dieldrin	UNFI	0.100	ug/L	C	U	UNFI	0.100	ug/L	C	U		NA			
Endosulfan II	UNFI	0.100	ug/L	C	U	UNFI	0.100	ug/L	C	U		NA			
Endosulfan sulfate	UNFI	0.100	ug/L	C	U	UNFI	0.100	ug/L	C	U		NA			
Endosulfan-I	UNFI	0.050	ug/L	C	U	UNFI	0.050	ug/L	C	U		NA			
Endrin	UNFI	0.100	ug/L	C	U	UNFI	0.100	ug/L	C	U		NA			
Endrin aldehyde	UNFI	0.100	ug/L	C	UJ	UNFI	0.100	ug/L	C	UJ		NA			
Endrin ketone	UNFI	0.100	ug/L	C	U	UNFI	0.100	ug/L	C	U		NA			
Heptachlor	UNFI	0.050	ug/L	C	U	UNFI	0.050	ug/L	C	U		NA			
Heptachlor epoxide	UNFI	0.050	ug/L	C	U	UNFI	0.050	ug/L	C	U		NA			
Methoxychlor	UNFI	0.500	ug/L	C	U	UNFI	0.500	ug/L	C	U		NA			
Toxaphene	UNFI	5.000	ug/L	C	U	UNFI	5.000	ug/L	C	U		NA			
alpha-BHC	UNFI	0.050	ug/L	C	U	UNFI	0.050	ug/L	C	U		NA			
alpha-Chlordane	UNFI	0.050	ug/L	C	U	UNFI	0.050	ug/L	C	U		NA			
beta-BHC	UNFI	0.050	ug/L	C	U	UNFI	0.050	ug/L	C	U		NA			
delta-BHC	UNFI	0.050	ug/L	C	UJ	UNFI	0.050	ug/L	C	UJ		NA			
gamma-BHC (Lindane)	UNFI	0.050	ug/L	C	U	UNFI	0.050	ug/L	C	U		NA			
gamma-Chlordane	UNFI	0.050	ug/L	C	U	UNFI	0.050	ug/L	C	U		NA			
General Chemistry															
Alkalinity	UNFI	287.500	mg/L	B	-	UNFI	332.500	mg/L	B	-		NA			
Ammonia	UNFI	0.100	mg/L	B	U	UNFI	0.100	mg/L	B	U		NA			
Chloride	UNFI	23.000	mg/L	B	-	UNFI	27.300	mg/L	B	-		NA			
Fluoride	UNFI	0.160	mg/L	B	-	UNFI	0.170	mg/L	B	-		NA			
Nitrate	UNFI	0.100	mg/L	B	R	UNFI	0.100	mg/L	B	R		NA			
Phenols	UNFI	0.010	mg/L	B	U	UNFI	0.010	mg/L	B	U		NA			
Sulfate	UNFI	118.900	mg/L	B	-	UNFI	120.000	mg/L	B	-		NA			
Sulfide	UNFI	10.750	mg/L	B	-	UNFI	1.550	mg/L	B	-		NA			
Total Kjeldahl Nitrogen	UNFI	0.100	mg/L	B	U	UNFI	0.100	mg/L	B	U		NA			
Total Organic Carbon	UNFI	1.000	mg/L	B	U	UNFI	1.000	mg/L	B	U		NA			
Total Organic Halides	UNFI	0.010	mg/L	B	J	UNFI	0.010	mg/L	B	UJ		NA			
Total Organic Nitrogen	UNFI	0.100	mg/L	B	U	UNFI	0.100	mg/L	B	U		NA			
Total Phosphorous	UNFI	0.050	mg/L	B	-	UNFI	0.020	mg/L	B	U		NA			

TABLE D-11A
(Continued)

PHASE II - CHEMICAL PARAMETERS

BORING NUMBER	2936					2936					2939				
SAMPLE NUMBER	114917					114918					114924				
	DUPLICATE					DUPLICATE									
SAMPLING DATE	06/12/93					06/12/93					06/13/93				
CHEMICAL PARAMETERS	FLTD	RESULTS	UNITS	L	VQ	FLTD	RESULTS	UNITS	L	VQ	FLTD	RESULTS	UNITS	L	VQ
Inorganics															
Aluminum		NA					NA				FILT	0.034	mg/L	C	-
Aluminum	UNFI	0.030	mg/L	C	U	UNFI	0.030	mg/L	C	U	UNFI	0.046	mg/L	C	-
Antimony		NA					NA				FILT	0.059	mg/L	C	U
Antimony	UNFI	0.059	mg/L	C	U	UNFI	0.059	mg/L	C	U	UNFI	0.059	mg/L	C	U
Arsenic		NA					NA				FILT	0.001	mg/L	C	U
Arsenic	UNFI	0.001	mg/L	C	-	UNFI	0.001	mg/L	C	-	UNFI	0.001	mg/L	C	U
Barium		NA					NA				FILT	0.063	mg/L	C	-
Barium	UNFI	0.059	mg/L	C	-	UNFI	0.059	mg/L	C	-	UNFI	0.061	mg/L	C	-
Beryllium		NA					NA				FILT	0.001	mg/L	C	U
Beryllium	UNFI	0.000	mg/L	C	U	UNFI	0.000	mg/L	C	U	UNFI	0.001	mg/L	C	U
Cadmium		NA					NA				FILT	0.003	mg/L	C	U
Cadmium	UNFI	0.003	mg/L	C	U	UNFI	0.003	mg/L	C	U	UNFI	0.003	mg/L	C	U
Calcium		NA					NA				FILT	111.000	mg/L	C	-
Calcium	UNFI	104.000	mg/L	C	-	UNFI	105.000	mg/L	C	-	UNFI	107.000	mg/L	C	-
Chromium		NA					NA				FILT	0.005	mg/L	C	U
Chromium	UNFI	0.005	mg/L	C	U	UNFI	0.005	mg/L	C	U	UNFI	0.005	mg/L	C	U
Cobalt		NA					NA				FILT	0.005	mg/L	C	U
Cobalt	UNFI	0.004	mg/L	C	U	UNFI	0.004	mg/L	C	U	UNFI	0.004	mg/L	C	U
Copper		NA					NA				FILT	0.003	mg/L	C	U
Copper	UNFI	0.003	mg/L	C	U	UNFI	0.003	mg/L	C	U	UNFI	0.003	mg/L	C	U
Cyanide	UNFI	0.002	mg/L	C	U		NA				UNFI	0.002	mg/L	C	U
Iron		NA					NA				FILT	1.030	mg/L	C	-
Iron	UNFI	1.180	mg/L	C	-	UNFI	1.120	mg/L	C	-	UNFI	1.070	mg/L	C	-
Lead		NA					NA				FILT	0.001	mg/L	C	U
Lead	UNFI	0.001	mg/L	C	U	UNFI	0.001	mg/L	C	U	UNFI	0.001	mg/L	C	U
Magnesium		NA					NA				FILT	26.300	mg/L	C	-
Magnesium	UNFI	25.400	mg/L	C	-	UNFI	25.400	mg/L	C	-	UNFI	25.700	mg/L	C	-
Manganese		NA					NA				FILT	0.332	mg/L	C	-
Manganese	UNFI	0.420	mg/L	C	-	UNFI	0.423	mg/L	C	-	UNFI	0.330	mg/L	C	-
Mercury		NA					NA				FILT	0.000	mg/L	C	UJ
Mercury	UNFI	0.000	mg/L	C	UJ	UNFI	0.000	mg/L	C	UJ	UNFI	0.000	mg/L	C	UJ
Molybdenum		NA					NA				FILT	0.009	mg/L	C	-
Molybdenum	UNFI	0.007	mg/L	C	U	UNFI	0.007	mg/L	C	U	UNFI	0.007	mg/L	C	U
Nickel		NA					NA				FILT	0.021	mg/L	C	U
Nickel	UNFI	0.021	mg/L	C	U	UNFI	0.021	mg/L	C	U	UNFI	0.021	mg/L	C	U
Potassium		NA					NA				FILT	2.980	mg/L	C	U
Potassium	UNFI	5.460	mg/L	C	J	UNFI	2.980	mg/L	C	UJ	UNFI	2.980	mg/L	C	U
Selenium		NA					NA				FILT	0.001	mg/L	C	UJ
Selenium	UNFI	0.001	mg/L	C	UJ	UNFI	0.001	mg/L	C	UJ	UNFI	0.001	mg/L	C	UJ
Silicon		NA					NA				FILT	5.170	mg/L	C	-
Silicon	UNFI	4.890	mg/L	C	-	UNFI	4.830	mg/L	C	-	UNFI	5.030	mg/L	C	-
Silver		NA					NA				FILT	0.004	mg/L	C	U

TABLE D-11A
(Continued)

PHASE II - CHEMICAL PARAMETERS

BORING NUMBER		2936					2936					2939			
SAMPLE NUMBER		114917					114918					114924			
		DUPLICATE					DUPLICATE								
SAMPLING DATE		06/12/93					06/12/93					06/13/93			
CHEMICAL PARAMETERS	FLTD	RESULTS	UNITS	L	VQ	FLTD	RESULTS	UNITS	L	VQ	FLTD	RESULTS	UNITS	L	VQ
Inorganics															
Silver	UNFI	0.004	mg/L	C	U	UNFI	0.004	mg/L	C	U	UNFI	0.004	mg/L	C	U
Sodium		NA					NA				FILT	17.900	mg/L	C	-
Sodium	UNFI	14.800	mg/L	C	-	UNFI	15.200	mg/L	C	-	UNFI	17.100	mg/L	C	-
Thallium		NA					NA				FILT	0.001	mg/L	C	U
Thallium	UNFI	0.001	mg/L	C	UJ	UNFI	0.001	mg/L	C	UJ	UNFI	0.001	mg/L	C	U
Vanadium		NA					NA				FILT	0.002	mg/L	C	U
Vanadium	UNFI	0.002	mg/L	C	U	UNFI	0.002	mg/L	C	U	UNFI	0.002	mg/L	C	U
Zinc		NA					NA				FILT	0.012	mg/L	C	U
Zinc	UNFI	0.028	mg/L	C	U	UNFI	0.011	mg/L	C	U	UNFI	0.010	mg/L	C	U
Volatile Organics															
1,1,1-Trichloroethane	UNFI	10.000	ug/L	C	U		NA				UNFI	10.000	ug/L	C	U
1,1,2,2-Tetrachloroethane	UNFI	10.000	ug/L	C	U		NA				UNFI	10.000	ug/L	C	U
1,1,2-Trichloroethane	UNFI	10.000	ug/L	C	U		NA				UNFI	10.000	ug/L	C	U
1,1-Dichloroethane	UNFI	10.000	ug/L	C	U		NA				UNFI	10.000	ug/L	C	U
1,1-Dichloroethene	UNFI	10.000	ug/L	C	U		NA				UNFI	10.000	ug/L	C	U
1,2-Dichloroethane	UNFI	10.000	ug/L	C	U		NA				UNFI	10.000	ug/L	C	U
1,2-Dichloroethene	UNFI	10.000	ug/L	C	U		NA				UNFI	10.000	ug/L	C	U
1,2-Dichloropropane	UNFI	10.000	ug/L	C	U		NA				UNFI	10.000	ug/L	C	U
2-Butanone	UNFI	10.000	ug/L	C	U		NA				UNFI	10.000	ug/L	C	UJ
2-Hexanone	UNFI	10.000	ug/L	C	U		NA				UNFI	10.000	ug/L	C	UJ
4-Methyl-2-pentanone	UNFI	10.000	ug/L	C	U		NA				UNFI	10.000	ug/L	C	R
Acetone	UNFI	10.000	ug/L	C	U		NA				UNFI	10.000	ug/L	C	UJ
Benzene	UNFI	10.000	ug/L	C	U		NA				UNFI	10.000	ug/L	C	U
Bromodichloromethane	UNFI	10.000	ug/L	C	U		NA				UNFI	10.000	ug/L	C	U
Bromoform	UNFI	10.000	ug/L	C	U		NA				UNFI	10.000	ug/L	C	U
Bromomethane	UNFI	10.000	ug/L	C	UJ		NA				UNFI	10.000	ug/L	C	U
Carbon Tetrachloride	UNFI	10.000	ug/L	C	U		NA				UNFI	10.000	ug/L	C	U
Carbon disulfide	UNFI	10.000	ug/L	C	U		NA				UNFI	10.000	ug/L	C	U
Chlorobenzene	UNFI	10.000	ug/L	C	U		NA				UNFI	10.000	ug/L	C	U
Chloroethane	UNFI	10.000	ug/L	C	U		NA				UNFI	10.000	ug/L	C	U
Chloroform	UNFI	10.000	ug/L	C	U		NA				UNFI	10.000	ug/L	C	U
Chloromethane	UNFI	10.000	ug/L	C	U		NA				UNFI	10.000	ug/L	C	U
Dibromochloromethane	UNFI	10.000	ug/L	C	U		NA				UNFI	10.000	ug/L	C	U
Ethylbenzene	UNFI	10.000	ug/L	C	U		NA				UNFI	10.000	ug/L	C	U
Methylene chloride	UNFI	10.000	ug/L	C	U		NA				UNFI	10.000	ug/L	C	U
Styrene	UNFI	10.000	ug/L	C	U		NA				UNFI	10.000	ug/L	C	U
Tetrachloroethene	UNFI	10.000	ug/L	C	U		NA				UNFI	10.000	ug/L	C	U
Toluene	UNFI	10.000	ug/L	C	U		NA				UNFI	10.000	ug/L	C	U
Trichloroethene	UNFI	10.000	ug/L	C	U		NA				UNFI	10.000	ug/L	C	U
Vinyl Acetate	UNFI	10.000	ug/L	C	UJ		NA					NA			

TABLE D-11A
(Continued)

PHASE II - CHEMICAL PARAMETERS

BORING NUMBER	2936					2936					2939				
SAMPLE NUMBER	114917					114918					114924				
	DUPLICATE					DUPLICATE									
SAMPLING DATE	06/12/93					06/12/93					06/13/93				
CHEMICAL PARAMETERS	FLTD	RESULTS	UNITS	L	VQ	FLTD	RESULTS	UNITS	L	VQ	FLTD	RESULTS	UNITS	L	VQ
Volatile Organics															
Vinyl chloride	UNFI	10.000	ug/L	C	U		NA				UNFI	10.000	ug/L	C	U
Xylenes, Total	UNFI	10.000	ug/L	C	U		NA				UNFI	10.000	ug/L	C	U
cis-1,3-Dichloropropene	UNFI	10.000	ug/L	C	U		NA				UNFI	10.000	ug/L	C	U
trans-1,3-Dichloropropene	UNFI	10.000	ug/L	C	U		NA				UNFI	10.000	ug/L	C	U
Semivolatile Organics															
1,2,4-Trichlorobenzene	UNFI	10.000	ug/L	C	U		NA				UNFI	10.000	ug/L	C	U
1,2-Dichlorobenzene	UNFI	10.000	ug/L	C	U		NA				UNFI	10.000	ug/L	C	U
1,3-Dichlorobenzene	UNFI	10.000	ug/L	C	U		NA				UNFI	10.000	ug/L	C	U
1,4-Dichlorobenzene	UNFI	10.000	ug/L	C	U		NA				UNFI	10.000	ug/L	C	U
2,4,5-Trichlorophenol	UNFI	25.000	ug/L	C	U		NA				UNFI	25.000	ug/L	C	U
2,4,6-Trichlorophenol	UNFI	10.000	ug/L	C	U		NA				UNFI	10.000	ug/L	C	U
2,4-Dichlorophenol	UNFI	10.000	ug/L	C	U		NA				UNFI	10.000	ug/L	C	U
2,4-Dimethylphenol	UNFI	10.000	ug/L	C	U		NA				UNFI	10.000	ug/L	C	U
2,4-Dinitrophenol	UNFI	25.000	ug/L	C	UJ		NA				UNFI	25.000	ug/L	C	UJ
2,4-Dinitrotoluene	UNFI	10.000	ug/L	C	U		NA				UNFI	10.000	ug/L	C	U
2,6-Dinitrotoluene	UNFI	10.000	ug/L	C	U		NA				UNFI	10.000	ug/L	C	U
2-Benzyl-4-chlorophenol	UNFI	10.000	ug/L	C	U		NA				UNFI	10.000	ug/L	C	UJ
2-Chloronaphthalene	UNFI	10.000	ug/L	C	U		NA				UNFI	10.000	ug/L	C	U
2-Chlorophenol	UNFI	10.000	ug/L	C	U		NA				UNFI	10.000	ug/L	C	U
2-Methylnaphthalene	UNFI	10.000	ug/L	C	U		NA				UNFI	10.000	ug/L	C	U
2-Methylphenol	UNFI	10.000	ug/L	C	U		NA				UNFI	10.000	ug/L	C	U
2-Nitroaniline	UNFI	25.000	ug/L	C	U		NA				UNFI	25.000	ug/L	C	UJ
2-Nitrophenol	UNFI	10.000	ug/L	C	U		NA				UNFI	10.000	ug/L	C	U
3,3'-Dichlorobenzidine	UNFI	10.000	ug/L	C	U		NA				UNFI	10.000	ug/L	C	U
3-Nitroaniline	UNFI	25.000	ug/L	C	U		NA				UNFI	25.000	ug/L	C	U
4,6-Dinitro-2-methylphenol	UNFI	25.000	ug/L	C	UJ		NA				UNFI	25.000	ug/L	C	UJ
4-Bromophenyl phenyl ether	UNFI	10.000	ug/L	C	U		NA				UNFI	10.000	ug/L	C	U
4-Chloro-3-methylphenol	UNFI	10.000	ug/L	C	U		NA				UNFI	10.000	ug/L	C	U
4-Chlorophenylphenyl ether	UNFI	10.000	ug/L	C	U		NA				UNFI	10.000	ug/L	C	U
4-Methylphenol	UNFI	10.000	ug/L	C	U		NA				UNFI	10.000	ug/L	C	U
4-Nitroaniline	UNFI	25.000	ug/L	C	U		NA				UNFI	25.000	ug/L	C	UJ
4-Nitrophenol	UNFI	25.000	ug/L	C	UJ		NA				UNFI	25.000	ug/L	C	U
Acenaphthene	UNFI	10.000	ug/L	C	U		NA				UNFI	10.000	ug/L	C	U
Acenaphthylene	UNFI	10.000	ug/L	C	U		NA				UNFI	10.000	ug/L	C	U
Anthracene	UNFI	10.000	ug/L	C	U		NA				UNFI	10.000	ug/L	C	U
Benzo(a)anthracene	UNFI	10.000	ug/L	C	U		NA				UNFI	10.000	ug/L	C	U
Benzo(a)pyrene	UNFI	10.000	ug/L	C	U		NA				UNFI	10.000	ug/L	C	U
Benzo(b)fluoranthene	UNFI	10.000	ug/L	C	U		NA				UNFI	10.000	ug/L	C	U
Benzo(g,h,i)perylene	UNFI	10.000	ug/L	C	U		NA				UNFI	10.000	ug/L	C	U
Benzo(k)fluoranthene	UNFI	10.000	ug/L	C	U		NA				UNFI	10.000	ug/L	C	U

TABLE D-11A
(Continued)

PHASE II - CHEMICAL PARAMETERS

BORING NUMBER		2936					2936					2939			
SAMPLE NUMBER		114917					114918					114924			
		DUPLICATE													
SAMPLING DATE		06/12/93					06/12/93					06/13/93			
CHEMICAL PARAMETERS	FLTD	RESULTS	UNITS	L	VQ	FLTD	RESULTS	UNITS	L	VQ	FLTD	RESULTS	UNITS	L	VQ
Semivolatile Organics															
Benzoic acid	UNFI	50.000	ug/L	C	UJ		NA				UNFI	50.000	ug/L	C	U
Benzyl alcohol	UNFI	10.000	ug/L	C	UJ		NA				UNFI	10.000	ug/L	C	R
Butyl benzyl phthalate	UNFI	1.000	ug/L	C	J		NA				UNFI	1.000	ug/L	C	J
Carbazole	UNFI	10.000	ug/L	C	U		NA				UNFI	10.000	ug/L	C	U
Chrysene	UNFI	10.000	ug/L	C	U		NA				UNFI	10.000	ug/L	C	U
Di-n-butyl phthalate	UNFI	10.000	ug/L	C	U		NA				UNFI	10.000	ug/L	C	U
Di-n-octyl phthalate	UNFI	10.000	ug/L	C	U		NA				UNFI	10.000	ug/L	C	U
Dibenzo(a,h)anthracene	UNFI	10.000	ug/L	C	U		NA				UNFI	10.000	ug/L	C	U
Dibenzofuran	UNFI	10.000	ug/L	C	U		NA				UNFI	10.000	ug/L	C	U
Diethyl phthalate	UNFI	10.000	ug/L	C	U		NA				UNFI	10.000	ug/L	C	U
Dimethyl phthalate	UNFI	10.000	ug/L	C	U		NA				UNFI	10.000	ug/L	C	U
Fluoranthene	UNFI	10.000	ug/L	C	U		NA				UNFI	10.000	ug/L	C	U
Fluorene	UNFI	10.000	ug/L	C	U		NA				UNFI	10.000	ug/L	C	U
Hexachlorobenzene	UNFI	10.000	ug/L	C	U		NA				UNFI	10.000	ug/L	C	U
Hexachlorobutadiene	UNFI	10.000	ug/L	C	U		NA				UNFI	10.000	ug/L	C	UJ
Hexachlorocyclopentadiene	UNFI	10.000	ug/L	C	U		NA				UNFI	10.000	ug/L	C	U
Hexachloroethane	UNFI	10.000	ug/L	C	U		NA				UNFI	10.000	ug/L	C	U
Indeno(1,2,3-cd)pyrene	UNFI	10.000	ug/L	C	U		NA				UNFI	10.000	ug/L	C	U
Isophorone	UNFI	10.000	ug/L	C	U		NA				UNFI	10.000	ug/L	C	U
N-Nitroso-di-n-propylamine	UNFI	10.000	ug/L	C	U		NA				UNFI	10.000	ug/L	C	UJ
N-Nitrosodimethylamine	UNFI	10.000	ug/L	C	U		NA				UNFI	10.000	ug/L	C	UJ
N-Nitrosodiphenylamine	UNFI	10.000	ug/L	C	U		NA				UNFI	10.000	ug/L	C	U
Naphthalene	UNFI	10.000	ug/L	C	U		NA				UNFI	10.000	ug/L	C	U
Nitrobenzene	UNFI	10.000	ug/L	C	U		NA				UNFI	10.000	ug/L	C	U
Pentachlorophenol	UNFI	25.000	ug/L	C	UJ		NA				UNFI	25.000	ug/L	C	UJ
Phenanthrene	UNFI	10.000	ug/L	C	U		NA				UNFI	10.000	ug/L	C	U
Phenol	UNFI	10.000	ug/L	C	U		NA				UNFI	10.000	ug/L	C	U
Pyrene	UNFI	10.000	ug/L	C	U		NA				UNFI	10.000	ug/L	C	U
Tributyl phosphate	UNFI	10.000	ug/L	C	U		NA				UNFI	10.000	ug/L	C	U
bis(2-Chloroethoxy)methane	UNFI	10.000	ug/L	C	U		NA				UNFI	10.000	ug/L	C	U
bis(2-Chloroethyl)ether	UNFI	10.000	ug/L	C	U		NA				UNFI	10.000	ug/L	C	U
bis(2-Chloroisopropyl) ether	UNFI	10.000	ug/L	C	U		NA				UNFI	10.000	ug/L	C	U
bis(2-Ethylhexyl) phthalate	UNFI	10.000	ug/L	C	U		NA				UNFI	10.000	ug/L	C	U
p-Chloroaniline	UNFI	10.000	ug/L	C	U		NA				UNFI	10.000	ug/L	C	U
Pesticide Organics/PCBs															
4,4'-DDD	UNFI	0.100	ug/L	C	U		NA				UNFI	0.100	ug/L	C	U
4,4'-DDE	UNFI	0.100	ug/L	C	U		NA				UNFI	0.100	ug/L	C	U
4,4'-DDT	UNFI	0.100	ug/L	C	U		NA				UNFI	0.100	ug/L	C	U
Aldrin	UNFI	0.050	ug/L	C	U		NA				UNFI	0.050	ug/L	C	U
Aroclor-1016	UNFI	1.000	ug/L	C	U		NA				UNFI	1.000	ug/L	C	U

000218

TABLE D-11A
(Continued)

PHASE II - CHEMICAL PARAMETERS

BORING NUMBER		2936					2936					2939			
SAMPLE NUMBER		114917 DUPLICATE					114918 DUPLICATE					114924			
SAMPLING DATE		06/12/93					06/12/93					06/13/93			
CHEMICAL PARAMETERS	FLTD	RESULTS	UNITS	L	VQ	FLTD	RESULTS	UNITS	L	VQ	FLTD	RESULTS	UNITS	L	VQ
Pesticide Organics/PCBs															
Aroclor-1221	UNFI	2.000	ug/L	C	U		NA				UNFI	2.000	ug/L	C	U
Aroclor-1232	UNFI	1.000	ug/L	C	U		NA				UNFI	1.000	ug/L	C	U
Aroclor-1242	UNFI	1.000	ug/L	C	U		NA				UNFI	1.000	ug/L	C	U
Aroclor-1248	UNFI	1.000	ug/L	C	U		NA				UNFI	1.000	ug/L	C	U
Aroclor-1254	UNFI	1.000	ug/L	C	U		NA				UNFI	1.000	ug/L	C	U
Aroclor-1260	UNFI	1.000	ug/L	C	U		NA				UNFI	1.000	ug/L	C	U
Dieldrin	UNFI	0.100	ug/L	C	U		NA				UNFI	0.100	ug/L	C	U
Endosulfan II	UNFI	0.100	ug/L	C	U		NA				UNFI	0.100	ug/L	C	U
Endosulfan sulfate	UNFI	0.100	ug/L	C	U		NA				UNFI	0.100	ug/L	C	U
Endosulfan-I	UNFI	0.050	ug/L	C	U		NA				UNFI	0.050	ug/L	C	U
Endrin	UNFI	0.100	ug/L	C	U		NA				UNFI	0.100	ug/L	C	U
Endrin aldehyde	UNFI	0.100	ug/L	C	UJ		NA				UNFI	0.100	ug/L	C	UJ
Endrin ketone	UNFI	0.100	ug/L	C	U		NA				UNFI	0.100	ug/L	C	U
Heptachlor	UNFI	0.050	ug/L	C	U		NA				UNFI	0.050	ug/L	C	U
Heptachlor epoxide	UNFI	0.050	ug/L	C	U		NA				UNFI	0.050	ug/L	C	U
Methoxychlor	UNFI	0.500	ug/L	C	U		NA				UNFI	0.500	ug/L	C	U
Toxaphene	UNFI	5.000	ug/L	C	U		NA				UNFI	5.000	ug/L	C	U
alpha-BHC	UNFI	0.050	ug/L	C	U		NA				UNFI	0.050	ug/L	C	U
alpha-Chlordane	UNFI	0.050	ug/L	C	U		NA				UNFI	0.050	ug/L	C	U
beta-BHC	UNFI	0.050	ug/L	C	U		NA				UNFI	0.050	ug/L	C	U
delta-BHC	UNFI	0.050	ug/L	C	UJ		NA				UNFI	0.050	ug/L	C	UJ
gamma-BHC (Lindane)	UNFI	0.050	ug/L	C	U		NA				UNFI	0.050	ug/L	C	U
gamma-Chlordane	UNFI	0.050	ug/L	C	U		NA				UNFI	0.050	ug/L	C	U
General Chemistry															
Alkalinity	UNFI	265.000	mg/L	B	-		NA				UNFI	278.500	mg/L	B	-
Ammonia	UNFI	0.100	mg/L	B	U		NA				UNFI	0.100	mg/L	B	U
Chloride	UNFI	28.150	mg/L	B	-		NA				UNFI	26.860	mg/L	B	-
Fluoride	UNFI	0.160	mg/L	B	-		NA				UNFI	0.160	mg/L	B	-
Nitrate	UNFI	0.100	mg/L	B	R		NA				UNFI	0.890	mg/L	B	J
Phenols	UNFI	0.010	mg/L	B	U		NA				UNFI	0.010	mg/L	B	U
Phosphorus	UNFI	0.050	mg/L	B	-		NA					NA			
Sulfate	UNFI	116.800	mg/L	B	-		NA				UNFI	106.800	mg/L	B	-
Sulfide	UNFI	0.500	mg/L	B	U		NA				UNFI	0.510	mg/L	B	-
Total Kjeldahl Nitrogen	UNFI	0.100	mg/L	B	U		NA				UNFI	0.100	mg/L	B	U
Total Organic Carbon	UNFI	1.000	mg/L	B	U		NA				UNFI	1.000	mg/L	B	U
Total Organic Halides	UNFI	0.010	mg/L	B	UJ		NA				UNFI	0.010	mg/L	B	UJ
Total Organic Nitrogen	UNFI	0.100	mg/L	B	U		NA				UNFI	0.100	mg/L	B	U
Total Phosphorous		NA					NA				UNFI	0.040	mg/L	B	-

TABLE D-11B
LIME SLUDGE PONDS
TENTATIVELY IDENTIFIED COMPOUNDS
WATER

Sample Number	Sample Location	Media	Parameter	Result	Units
110888	TRIP BLANK	TB	2-hexenal, (e)-	7	ug/L
110989	2042	GW	2-piperidinecarboxylic acid	6	ug/L
114580	RINSATE	R	1-propene, 3,3,3-trichloro-	2	ug/L
114580	RINSATE	R	2-hexene, 4,4,5-trimethyl	3	ug/L
114595	DUPLICATE	SW	azacyclotridecan-2-one	22	ug/L
114620	1934	GW	benzothiazole	120	ug/L
114620	1934	GW	2(3)-benzothiazolethione	93	ug/L
114725	RINSATE	R	1,2-benzisothiazole	2	ug/L
114725	RINSATE	R	formamide, N,N-dibutyl-	2	ug/L
114725	RINSATE	R	phenol, 4-(2,2,4-trimethylpe	2	ug/L
114725	RINSATE	R	pentadecane	2	ug/L
114725	RINSATE	R	pentadecane	3	ug/L
114725	RINSATE	R	heptadecane, 2,6-dimethyl-	3	ug/L
114811	RINSATE	R	1,2-benzisothiazole	3	ug/L
114811	RINSATE	R	formamide, N,N-dibutyl-	2	ug/L
114811	RINSATE	R	phenol, 4-(2,2,3,3-tetrameth	10	ug/L
114829	RINSATE	R	cyclohexanone, 2-hydroxy-	4	ug/L
114829	RINSATE	R	1,3-doxane, 4-phenyl-	4	ug/L
114829	RINSATE	R	phenol, 4-(2,2,3,3-tetrameth	3	ug/L
114784	1940	GW	cyclohexanone, 2-hydroxy-	35	ug/L
114924	2939	GW	heptanal	2	ug/L

TB - trip blank
R - rinsate
SW - surface water
GW - groundwater

TABLE D-12

TABLE D-12

LIME SLUDGE PONDS
RI/FS TCLP RESULTS
OPERABLE UNIT 2 REMEDIAL INVESTIGATION
FERNALD ENVIRONMENTAL MANAGEMENT PROJECT

PHASE I - CHEMICAL PARAMETERS

BORING NUMBER	1716				1717			
SAMPLE NUMBER	067007				067003			
	1.5-2				1.5-2			
SAMPLING DATE	05/14/91				05/14/91			
CHEMICAL PARAMETERS	RESULTS	UNITS	L	VQ	RESULTS	UNITS	L	VQ
Inorganics								
Arsenic	0.499	mg/L	C	-	0.380	mg/L	C	-
Barium	0.513	mg/L	C	-	0.639	mg/L	C	-
Cadmium	0.044	mg/L	C	-	0.035	mg/L	C	-
Chromium	0.111	mg/L	C	-	0.092	mg/L	C	-
Lead	0.276	mg/L	C	-	0.204	mg/L	C	-
Mercury	0.000	mg/L	C	U	0.000	mg/L	C	U
Selenium	0.475	mg/L	C	-	0.400	mg/L	C	U
Silver	0.154	mg/L	C	-	0.145	mg/L	C	-
Volatile Organics								
1,1,1-Trichloroethane	5.000	ug/L	C	U	NA			
1,1,2,2-Tetrachloroethane	5.000	ug/L	C	U	NA			
1,1,2-Trichloroethane	5.000	ug/L	C	U	NA			
1,1-Dichloroethane	5.000	ug/L	C	U	NA			
1,1-Dichloroethene	5.000	ug/L	C	U	11.000	ug/L	C	-
1,2-Dichloroethane	5.000	ug/L	C	U	5.000	ug/L	C	U
1,2-Dichloroethene	5.000	ug/L	C	U	NA			
1,2-Dichloropropane	5.000	ug/L	C	U	NA			
2-Butanone	10.000	ug/L	C	U	6.000	ug/L	C	J
2-Hexanone	10.000	ug/L	C	U	NA			
4-Methyl-2-pentanone	10.000	ug/L	C	U	NA			
Acetone	1.000	ug/L	C	-	NA			
Benzene	5.000	ug/L	C	U	5.000	ug/L	C	U
Bromodichloromethane	2.000	ug/L	C	J	NA			
Bromoform	5.000	ug/L	C	U	NA			
Bromomethane	10.000	ug/L	C	U	NA			
Carbon Tetrachloride	5.000	ug/L	C	U	5.000	ug/L	C	U
Carbon disulfide	5.000	ug/L	C	U	NA			
Chlorobenzene	5.000	ug/L	C	U	5.000	ug/L	C	U
Chloroethane	10.000	ug/L	C	U	NA			
Chloroform	5.000	ug/L	C	U	5.000	ug/L	C	U
Chloromethane	10.000	ug/L	C	U	NA			
Dibromochloromethane	5.000	ug/L	C	U	NA			
Ethylbenzene	5.000	ug/L	C	U	NA			
Methylene chloride	5.000	ug/L	C	U	NA			
Tetrachloroethene	5.000	ug/L	C	U	2.000	ug/L	C	J
Toluene	1.000	ug/L	C	J	NA			
Trichloroethene	5.000	ug/L	C	U	5.000	ug/L	C	U
Vinyl Acetate	10.000	ug/L	C	U	NA			
Vinyl chloride	10.000	ug/L	C	U	10.000	ug/L	C	U
Xylenes, Total	5.000	ug/L	C	U	NA			

000921

TABLE D-12
(Continued)

PHASE I - CHEMICAL PARAMETERS

BORING NUMBER	1716				1717			
SAMPLE NUMBER	067007				067003			
	1.5-2				1.5-2			
SAMPLING DATE	05/14/91				05/14/91			
CHEMICAL PARAMETERS	RESULTS	UNITS	L	VQ	RESULTS	UNITS	L	VQ
Volatile Organics								
cis-1,3-Dichloropropene	5.000	ug/L	C	U	NA			
trans-1,3-Dichloropropene	5.000	ug/L	C	U	NA			
Herbicide Organics								
2,4,5-TP (Silvex)	1.800	ug/L	C	U	1.800	ug/L	C	U
2,4-D	12.000	ug/L	C	U	12.000	ug/L	C	U
Pesticide Organics/PCBs								
Endrin	0.100	ug/L	C	U	0.100	ug/L	C	U
Heptachlor	0.050	ug/L	C	U	0.050	ug/L	C	U
Heptachlor epoxide	0.050	ug/L	C	U	0.050	ug/L	C	U
Methoxychlor	0.500	ug/L	C	U	0.500	ug/L	C	U
Toxaphene	1.000	ug/L	C	U	1.000	ug/L	C	U
alpha-Chlordane	0.500	ug/L	C	U	0.500	ug/L	C	U
gamma-BHC (Lindane)	0.050	ug/L	C	U	0.050	ug/L	C	U
gamma-Chlordane	0.500	ug/L	C	U	0.500	ug/L	C	U

TABLE D-12
(Continued)

PHASE II - CHEMICAL PARAMETERS

BORING NUMBER	1956				1957				1958			
SAMPLE NUMBER	114858				114836				114822			
	0-4				0.5-2				0.5-2.5			
SAMPLING DATE	06/08/93				06/07/93				06/06/93			
CHEMICAL PARAMETERS	RESULTS	UNITS	L	VQ	RESULTS	UNITS	L	VQ	RESULTS	UNITS	L	VQ
Inorganics												
Arsenic	0.040	mg/L	D	UJ	0.040	mg/L	C	UJ	0.040	mg/L	C	UJ
Barium	0.670	mg/L	D	-	0.800	mg/L	C	-	0.390	mg/L	C	-
Cadmium	0.005	mg/L	D	-	0.005	mg/L	C	-	0.005	mg/L	C	U
Chromium	0.020	mg/L	D	-	0.020	mg/L	C	-	0.020	mg/L	C	-
Lead	0.040	mg/L	D	UJ	0.040	mg/L	C	UJ	0.040	mg/L	C	UJ
Mercury	0.000	mg/L	D	U	0.000	mg/L	C	U	0.000	mg/L	C	U
Selenium	0.060	mg/L	D	UJ	0.060	mg/L	C	UJ	0.060	mg/L	C	UJ
Silver	0.005	mg/L	D	U	0.005	mg/L	C	U	0.005	mg/L	C	U
Volatile Organics												
1,1-Dichloroethane	NA				NA				25.000	ug/L	C	U
1,1-Dichloroethene	25.000	ug/L	D	U	25.000	ug/L	C	U	NA			
1,2-Dichloroethane	25.000	ug/L	D	U	25.000	ug/L	C	U	25.000	ug/L	C	U
2-Butanone	50.000	ug/L	D	U	50.000	ug/L	C	U	50.000	ug/L	C	U
Benzene	25.000	ug/L	D	U	25.000	ug/L	C	U	25.000	ug/L	C	U
Carbon Tetrachloride	25.000	ug/L	D	U	25.000	ug/L	C	U	25.000	ug/L	C	U
Chlorobenzene	25.000	ug/L	D	U	25.000	ug/L	C	U	25.000	ug/L	C	U
Chloroform	25.000	ug/L	D	U	25.000	ug/L	C	U	25.000	ug/L	C	U
Pyridine	400.000	ug/L	D	U	400.000	ug/L	C	U	400.000	ug/L	C	U
Tetrachloroethene	25.000	ug/L	D	U	25.000	ug/L	C	U	25.000	ug/L	C	U
Trichloroethene	25.000	ug/L	D	U	25.000	ug/L	C	U	25.000	ug/L	C	U
Vinyl chloride	50.000	ug/L	D	U	50.000	ug/L	C	U	50.000	ug/L	C	U
Semivolatile Organics												
1,4-Dichlorobenzene	40.000	ug/L	D	U	40.000	ug/L	C	U	40.000	ug/L	C	U
2,4,5-Trichlorophenol	200.000	ug/L	D	U	200.000	ug/L	C	U	200.000	ug/L	C	U
2,4,6-Trichlorophenol	40.000	ug/L	D	U	40.000	ug/L	C	U	40.000	ug/L	C	U
2,4-Dinitrotoluene	40.000	ug/L	D	U	40.000	ug/L	C	U	40.000	ug/L	C	U
Hexachlorobenzene	40.000	ug/L	D	U	40.000	ug/L	C	U	40.000	ug/L	C	U
Hexachlorobutadiene	40.000	ug/L	D	U	40.000	ug/L	C	U	40.000	ug/L	C	U
Hexachloroethane	40.000	ug/L	D	U	40.000	ug/L	C	U	40.000	ug/L	C	U
Nitrobenzene	40.000	ug/L	D	U	40.000	ug/L	C	U	40.000	ug/L	C	U
Pentachlorophenol	200.000	ug/L	D	U	200.000	ug/L	C	U	200.000	ug/L	C	U
Total Methylphenol	40.000	ug/L	D	U	40.000	ug/L	C	U	40.000	ug/L	C	U
Herbicide Organics												
2,4,5-TP (Silvex)	200.000	ug/L	D	U	200.000	ug/L	C	U	200.000	ug/L	C	U
2,4-D	400.000	ug/L	D	U	400.000	ug/L	C	U	400.000	ug/L	C	U
Pesticide Organics/PCBs												
Chlordane	6.000	ug/L	D	U	6.000	ug/L	C	U	6.000	ug/L	C	U

000923

6508

TABLE D-12
(Continued)

PHASE II - CHEMICAL PARAMETERS

BORING NUMBER	1956				1957				1958			
SAMPLE NUMBER	114858				114836				114822			
	0-4				0.5-2				0.5-2.5			
SAMPLING DATE	06/08/93				06/07/93				06/06/93			
CHEMICAL PARAMETERS	RESULTS	UNITS	L	VQ	RESULTS	UNITS	L	VQ	RESULTS	UNITS	L	VQ
Pesticide Organics/PCBs												
Endrin	4.000	ug/L	D	U	4.000	ug/L	C	U	4.000	ug/L	C	U
Heptachlor	1.000	ug/L	D	U	1.000	ug/L	C	U	1.000	ug/L	C	U
Heptachlor epoxide	1.000	ug/L	D	U	1.000	ug/L	C	U	1.000	ug/L	C	U
Methoxychlor	80.000	ug/L	D	U	80.000	ug/L	C	U	80.000	ug/L	C	U
Toxaphene	100.000	ug/L	D	U	100.000	ug/L	C	U	100.000	ug/L	C	U
gamma-BHC (Lindane)	8.000	ug/L	D	U	8.000	ug/L	C	U	8.000	ug/L	C	U

TABLE D-12
(Continued)

PHASE II - CHEMICAL PARAMETERS

BORING NUMBER	1959				1960				1961			
SAMPLE NUMBER	114813				114733				114746			
	3-5				2.5-5				2-4			
SAMPLING DATE	06/05/93				05/27/93				06/01/93			
CHEMICAL PARAMETERS	RESULTS	UNITS	L	VQ	RESULTS	UNITS	L	VQ	RESULTS	UNITS	L	VQ
Inorganics												
Arsenic	0.040	mg/L	C	UJ	0.050	mg/L	C	UJ	0.040	mg/L	C	U
Barium	0.400	mg/L	C	-	0.256	mg/L	C	-	0.350	mg/L	C	U
Cadmium	0.005	mg/L	C	U	0.005	mg/L	C	U	0.019	mg/L	C	-
Chromium	0.010	mg/L	C	-	0.010	mg/L	C	U	0.110	mg/L	C	-
Lead	0.040	mg/L	C	UJ	0.040	mg/L	C	UJ	0.050	mg/L	C	-
Mercury	0.000	mg/L	C	U	0.000	mg/L	C	U	0.001	mg/L	C	U
Selenium	0.060	mg/L	C	UJ	0.080	mg/L	C	UJ	0.060	mg/L	C	U
Silver	0.005	mg/L	C	U	0.010	mg/L	C	U	0.012	mg/L	C	-
Volatile Organics												
1,1-Dichloroethene	25.000	ug/L	C	U	5.000	ug/L	C	U	25.000	ug/L	C	U
1,2-Dichloroethane	25.000	ug/L	C	U	5.000	ug/L	C	U	25.000	ug/L	C	U
2-Butanone	50.000	ug/L	C	U	10.000	ug/L	C	U	31.000	ug/L	C	J
Benzene	25.000	ug/L	C	U	5.000	ug/L	C	U	25.000	ug/L	C	U
Carbon Tetrachloride	25.000	ug/L	C	U	5.000	ug/L	C	U	25.000	ug/L	C	U
Chlorobenzene	25.000	ug/L	C	U	5.000	ug/L	C	U	25.000	ug/L	C	U
Chloroform	25.000	ug/L	C	U	5.000	ug/L	C	U	25.000	ug/L	C	U
Pyridine	400.000	ug/L	C	U	200.000	ug/L	C	UJ	400.000	ug/L	C	U
Tetrachloroethene	25.000	ug/L	C	U	5.000	ug/L	C	U	25.000	ug/L	C	U
Trichloroethene	25.000	ug/L	C	U	5.000	ug/L	C	U	25.000	ug/L	C	U
Vinyl chloride	50.000	ug/L	C	U	10.000	ug/L	C	U	50.000	ug/L	C	U
Semivolatile Organics												
1,4-Dichlorobenzene	40.000	ug/L	C	U	20.000	ug/L	C	UJ	40.000	ug/L	C	U
2,4,5-Trichlorophenol	200.000	ug/L	C	U	100.000	ug/L	C	UJ	200.000	ug/L	C	U
2,4,6-Trichlorophenol	40.000	ug/L	C	U	20.000	ug/L	C	UJ	40.000	ug/L	C	U
2,4-Dinitrotoluene	40.000	ug/L	C	U	20.000	ug/L	C	UJ	40.000	ug/L	C	U
Hexachlorobenzene	40.000	ug/L	C	U	20.000	ug/L	C	UJ	40.000	ug/L	C	U
Hexachlorobutadiene	40.000	ug/L	C	U	20.000	ug/L	C	UJ	40.000	ug/L	C	U
Hexachloroethane	40.000	ug/L	C	U	20.000	ug/L	C	UJ	40.000	ug/L	C	U
Nitrobenzene	40.000	ug/L	C	U	20.000	ug/L	C	UJ	40.000	ug/L	C	U
Pentachlorophenol	200.000	ug/L	C	U	100.000	ug/L	C	UJ	200.000	ug/L	C	U
Total Methylphenol	40.000	ug/L	C	U	20.000	ug/L	C	UJ	40.000	ug/L	C	U
Herbicide Organics												
2,4,5-TP (Silvex)	200.000	ug/L	C	U	1.800	ug/L	C	UJ	200.000	ug/L	C	U
2,4-D	400.000	ug/L	C	U	10.000	ug/L	C	UJ	400.000	ug/L	C	U
Pesticide Organics/PCBs												
Chlordane	6.000	ug/L	C	U	NA				6.000	ug/L	C	U

TABLE D-12
(Continued)

PHASE II - CHEMICAL PARAMETERS

BORING NUMBER	1959				1960				1961			
SAMPLE NUMBER	114813				114733				114746			
	3-5				2.5-5				2-4			
SAMPLING DATE	06/05/93				05/27/93				06/01/93			
CHEMICAL PARAMETERS	RESULTS	UNITS	L	VQ	RESULTS	UNITS	L	VQ	RESULTS	UNITS	L	VQ
Pesticide Organics/PCBs												
Endrin	4.000	ug/L	C	U	0.100	ug/L	C	U	4.000	ug/L	C	U
Heptachlor	1.000	ug/L	C	U	0.050	ug/L	C	U	1.000	ug/L	C	U
Heptachlor epoxide	1.000	ug/L	C	U	0.050	ug/L	C	U	1.000	ug/L	C	U
Methoxychlor	80.000	ug/L	C	U	0.500	ug/L	C	U	80.000	ug/L	C	U
Toxaphene	100.000	ug/L	C	U	1.000	ug/L	C	U	100.000	ug/L	C	U
alpha-Chlordane	NA				0.500	ug/L	C	U	NA			
gamma-BHC (Lindane)	8.000	ug/L	C	U	0.050	ug/L	C	U	8.000	ug/L	C	U
gamma-Chlordane	NA				0.500	ug/L	C	U	NA			

000326

TABLE D-12
(Continued)

PHASE II - CHEMICAL PARAMETERS

BORING NUMBER	1963				1962			
SAMPLE NUMBER	114763				114609			
	2-4				2.5-4.5			
SAMPLING DATE	06/03/93				05/26/93			
CHEMICAL PARAMETERS	RESULTS	UNITS	L	VQ	RESULTS	UNITS	L	VQ
Inorganics								
Arsenic	0.040	mg/L	C	U	0.050	mg/L	C	UJ
Barium	0.280	mg/L	C	U	0.274	mg/L	C	-
Cadmium	0.005	mg/L	C	U	0.005	mg/L	C	U
Chromium	0.010	mg/L	C	-	0.010	mg/L	C	U
Lead	0.040	mg/L	C	U	0.040	mg/L	C	UJ
Mercury	0.001	mg/L	C	U	0.000	mg/L	C	U
Selenium	0.060	mg/L	C	U	0.080	mg/L	C	UJ
Silver	0.005	mg/L	C	U	0.010	mg/L	C	U
Volatile Organics								
1,1-Dichloroethene	25.000	ug/L	C	U	5.000	ug/L	C	U
1,2-Dichloroethane	25.000	ug/L	C	U	5.000	ug/L	C	U
2-Butanone	27.000	ug/L	C	J	10.000	ug/L	C	U
Benzene	25.000	ug/L	C	U	5.000	ug/L	C	U
Carbon Tetrachloride	25.000	ug/L	C	U	5.000	ug/L	C	U
Chlorobenzene	25.000	ug/L	C	U	5.000	ug/L	C	U
Chloroform	25.000	ug/L	C	U	5.000	ug/L	C	U
Pyridine	400.000	ug/L	C	U	200.000	ug/L	C	U
Tetrachloroethene	25.000	ug/L	C	U	5.000	ug/L	C	U
Trichloroethene	25.000	ug/L	C	U	5.000	ug/L	C	U
Vinyl chloride	50.000	ug/L	C	U	10.000	ug/L	C	U
Semivolatile Organics								
1,4-Dichlorobenzene	40.000	ug/L	C	U	20.000	ug/L	C	U
2,4,5-Trichlorophenol	200.000	ug/L	C	U	100.000	ug/L	C	U
2,4,6-Trichlorophenol	40.000	ug/L	C	U	20.000	ug/L	C	U
2,4-Dinitrotoluene	40.000	ug/L	C	U	20.000	ug/L	C	U
Hexachlorobenzene	40.000	ug/L	C	U	20.000	ug/L	C	U
Hexachlorobutadiene	40.000	ug/L	C	U	20.000	ug/L	C	U
Hexachloroethane	40.000	ug/L	C	U	20.000	ug/L	C	U
Nitrobenzene	40.000	ug/L	C	U	20.000	ug/L	C	U
Pentachlorophenol	200.000	ug/L	C	U	100.000	ug/L	C	U
Total Methylphenol	40.000	ug/L	C	U	20.000	ug/L	C	U
Herbicide Organics								
2,4,5-TP (Silvex)	200.000	ug/L	C	U	1.800	ug/L	C	UJ
2,4-D	400.000	ug/L	C	U	10.000	ug/L	C	UJ
Pesticide Organics/PCBs								
Chlordane	6.000	ug/L	C	U	NA			

TABLE D-12
(Continued)

PHASE II - CHEMICAL PARAMETERS

BORING NUMBER	1963				1962			
SAMPLE NUMBER	114763				114609			
	2-4				2.5-4.5			
SAMPLING DATE	06/03/93				05/26/93			
CHEMICAL PARAMETERS	RESULTS	UNITS	L	VQ	RESULTS	UNITS	L	VQ
Pesticide Organics/PCBs								
Endrin	4.000	ug/L	C	U	0.100	ug/L	C	U
Heptachlor	1.000	ug/L	C	U	0.050	ug/L	C	U
Heptachlor epoxide	1.000	ug/L	C	U	0.050	ug/L	C	U
Methoxychlor	80.000	ug/L	C	U	0.500	ug/L	C	U
Toxaphene	100.000	ug/L	C	U	1.000	ug/L	C	U
alpha-Chlordane	NA				0.500	ug/L	C	U
gamma-BHC (Lindane)	8.000	ug/L	C	U	0.050	ug/L	C	U
gamma-Chlordane	NA				0.500	ug/L	C	U

6508

TABLE D-13

TABLE D-13

LIME SLUDGE PONDS
CIS RCRA HAZARDOUS CHARACTERISTICS AND
EP-TOXICITY RESULTS
OPERABLE UNIT 2 REMEDIAL INVESTIGATION
FERNALD ENVIRONMENTAL MANAGEMENT PROJECT

RCRA HAZARDOUS CHARACTERISTICS
A review of the RCRA parameters measured showed that all of the borehole samples were within the established limits for ignitability, corrosivity, and reactivity. The EP-TOX metals from each of the six boreholes in the North and South Lime Sludge Ponds were below the maximum allowable concentration.

EP-TOXICITY RESULTS

Borehole Number	FEMP ID#	Parameter	Concentration (ug/L)	Qualifier[a]
47-01	FMP-PS-47-001	Selenium, EP Leachate	192.00	-
47-02	FMP-PS-47-002	Selenium, EP Leachate	293.00	-
47-03	FMP-PS-47-013	Mercury, EP Leachate Selenium, EP Leachate	0.23 187.00	-
48-01	FMP-PS-48-001	Barium, EP Leachate	1054.00	-
48-02	FMP-PS-48-014	Barium, EP Leachate Cadmium, EP Leachate Lead, EP Leachate	2091.00 163.00 647.00	-

[a]Laboratory qualifier, no data validation was performed.

6508

TABLE D-14

TABLE D-14

LIME SLUDGE PONDS
RI/FS QUALITY CONTROL SAMPLES
OPERABLE UNIT 2 REMEDIAL INVESTIGATION
FERNALD ENVIRONMENTAL MANAGEMENT PROJECT

PHASE I - CHEMICAL PARAMETERS

QC TYPE	TRIP/FIELD BLANK
SAMPLE NUMBER	067901
ASSOCIATED SAMPLES	067902, 067904
SAMPLING DATE	11/06/91

CHEMICAL PARAMETERS	RESULTS	UNITS	L	VQ
Volatile Organics				
1,1,1,2-Tetrachloroethane	0.010	mg/L	4	U
1,1,1-Trichloroethane	0.005	mg/L	4	U
1,1,2,2-Tetrachloroethane	0.005	mg/L	4	U
1,1,2-Trichloroethane	0.005	mg/L	4	U
1,1-Dichloroethane	0.005	mg/L	4	U
1,1-Dichloroethene	0.005	mg/L	4	U
1,2-Dibromo-3-chloropropane	0.010	mg/L	4	U
1,2-Dibromoethane	0.010	mg/L	4	U
1,2-Dichloroethane	0.005	mg/L	4	U
1,2-Dichloroethene	0.005	mg/L	4	U
1,2-Dichloropropane	0.005	mg/L	4	U
1,4-Dioxane	0.200	mg/L	4	R
2-Butanone	0.010	mg/L	4	U
2-Chloro-1,3-butadiene	0.010	mg/L	4	UJ
2-Hexanone	0.010	mg/L	4	U
3-Chloropropene	0.010	mg/L	4	UJ
4-Methyl-2-pentanone	0.010	mg/L	4	U
Acetone	0.011	mg/L	4	-
Acetonitrile	0.020	mg/L	4	UJ
Acrolein	0.020	mg/L	4	UJ
Acrylonitrile	0.020	mg/L	4	R
Benzene	0.005	mg/L	4	UJ
Bromodichloromethane	0.005	mg/L	4	U
Bromoform	0.005	mg/L	4	U
Bromomethane	0.010	mg/L	4	U
Carbon Tetrachloride	0.005	mg/L	4	U
Carbon disulfide	0.005	mg/L	4	U
Chlorobenzene	0.005	mg/L	4	UJ
Chloroethane	0.010	mg/L	4	U
Chloroform	0.002	mg/L	4	-
Chloromethane	0.010	mg/L	4	UJ
Dibromochloromethane	0.005	mg/L	4	U
Dibromomethane	0.010	mg/L	4	U
Dichlorodifluoromethane	0.200	mg/L	4	R
Ethyl cyanide	0.010	mg/L	4	U
Ethyl methacrylate	0.010	mg/L	4	U
Ethylbenzene	0.005	mg/L	4	UJ
Iodomethane	0.010	mg/L	4	U
Isobutyl alcohol	0.200	mg/L	4	U
Methacrylonitrile	0.010	mg/L	4	U
Methyl methacrylate	0.010	mg/L	4	U
Methylene chloride	0.002	mg/L	4	J

TABLE D-14
(Continued)

PHASE I - CHEMICAL PARAMETERS

QC TYPE	TRIP/FIELD BLANK
SAMPLE NUMBER	067901
ASSOCIATED SAMPLES	067902, 067904
SAMPLING DATE	11/06/91

CHEMICAL PARAMETERS	RESULTS	UNITS	L	VQ
Volatile Organics				
Pyridine	0.010	mg/L	4	U
Styrene	0.005	mg/L	4	UJ
Tetrachloroethene	0.005	mg/L	4	U
Toluene	0.005	mg/L	4	UJ
Trichloroethene	0.005	mg/L	4	U
Trichlorofluoromethane	0.010	mg/L	4	U
Vinyl Acetate	0.010	mg/L	4	U
Vinyl chloride	0.010	mg/L	4	U
Xylenes, Total	0.005	mg/L	4	UJ
cis-1,3-Dichloropropene	0.005	mg/L	4	U
trans-1,3-Dichloropropene	0.005	mg/L	4	U
trans-1,4-Dichloro-2-butene	0.010	mg/L	4	UJ
Semivolatile Organics				
1,2,4,5-Tetrachlorobenzene	0.010	mg/L	4	UJ
1,2,4-Trichlorobenzene	0.010	mg/L	4	U
1,2-Dichlorobenzene	0.010	mg/L	4	U
1,3,5-Trinitrobenzene	0.010	mg/L	4	U
1,3-Dichlorobenzene	0.010	mg/L	4	U
1,3-Dinitrobenzene	0.010	mg/L	4	U
1,4-Dichlorobenzene	0.010	mg/L	4	U
1,4-Naphthoquinone	0.010	mg/L	4	UJ
1-Naphthylamine	0.120	mg/L	4	U
2,3,4,6-Tetrachlorophenol	0.010	mg/L	4	U
2,4,5-Trichlorophenol	0.050	mg/L	4	U
2,4,6-Trichlorophenol	0.010	mg/L	4	U
2,4-Dichlorophenol	0.010	mg/L	4	U
2,4-Dimethylphenol	0.010	mg/L	4	UJ
2,4-Dinitrophenol	0.050	mg/L	4	UJ
2,4-Dinitrotoluene	0.010	mg/L	4	U
2,6-Dichlorophenol	0.010	mg/L	4	U
2,6-Dinitrotoluene	0.010	mg/L	4	U
2-Acetylaminofluorene	0.010	mg/L	4	U
2-Chloronaphthalene	0.010	mg/L	4	U
2-Chlorophenol	0.010	mg/L	4	U
2-Methylnaphthalene	0.010	mg/L	4	U
2-Methylphenol	0.010	mg/L	4	U
2-Naphthylamine	0.170	mg/L	4	U
2-Nitroaniline	0.050	mg/L	4	U
2-Nitrophenol	0.010	mg/L	4	U
2-Picoline	0.070	mg/L	4	U

TABLE D-14
(Continued)

PHASE I - CHEMICAL PARAMETERS

QC TYPE	TRIP/FIELD BLANK
SAMPLE NUMBER	067901
ASSOCIATED SAMPLES	067902, 067704
SAMPLING DATE	11/06/91

CHEMICAL PARAMETERS	RESULTS	UNITS	L	VQ
Semivolatile Organics				
3,3'-Dichlorobenzidine	0.020	mg/L	4	U
3,3'-Dimethylbenzidine	0.080	mg/L	4	U
3-Methylcholanthrene	0.030	mg/L	4	UJ
3-Methylphenol	0.010	mg/L	4	U
3-Nitroaniline	0.050	mg/L	4	U
4,6-Dinitro-2-methylphenol	0.050	mg/L	4	U
4-Aminobiphenyl	0.050	mg/L	4	U
4-Bromophenyl phenyl ether	0.010	mg/L	4	U
4-Chloro-3-methylphenol	0.010	mg/L	4	U
4-Chlorophenylphenyl ether	0.010	mg/L	4	U
4-Methylphenol	0.010	mg/L	4	U
4-Nitroaniline	0.050	mg/L	4	U
4-Nitrophenol	0.050	mg/L	4	U
4-Nitroquinoline-1-oxide	0.010	mg/L	4	UJ
5-Nitro-o-toluidine	0.020	mg/L	4	U
7,12-Dimethylbenz(a)anthracene	0.020	mg/L	4	U
Acenaphthene	0.010	mg/L	4	U
Acenaphthylene	0.010	mg/L	4	U
Acetophenone	0.010	mg/L	4	U
Aniline	0.050	mg/L	4	U
Anthracene	0.010	mg/L	4	U
Aramite	0.010	mg/L	4	UJ
Benzo(a)anthracene	0.010	mg/L	4	U
Benzo(a)pyrene	0.010	mg/L	4	U
Benzo(b)fluoranthene	0.010	mg/L	4	U
Benzo(g,h,i)perylene	0.010	mg/L	4	U
Benzo(k)fluoranthene	0.010	mg/L	4	U
Benzoic acid	0.050	mg/L	4	U
Benzyl alcohol	0.010	mg/L	4	U
Butyl benzyl phthalate	0.010	mg/L	4	U
Chrysene	0.010	mg/L	4	U
Di-n-butyl phthalate	0.010	mg/L	4	U
Di-n-octyl phthalate	0.010	mg/L	4	U
Diallate	0.010	mg/L	4	UJ
Dibenzo(a,h)anthracene	0.010	mg/L	4	U
Dibenzofuran	0.010	mg/L	4	U
Diethyl phthalate	0.010	mg/L	4	U
Dimethyl phthalate	0.010	mg/L	4	U
Diphenylamine	0.010	mg/L	4	UJ
Ethyl methanesulfonate	0.010	mg/L	4	U
Fluoranthene	0.010	mg/L	4	U
Fluorene	0.010	mg/L	4	U

TABLE D-14
(Continued)

PHASE I - CHEMICAL PARAMETERS

QC TYPE	TRIP/FIELD BLANK
SAMPLE NUMBER	067901
ASSOCIATED SAMPLES	067902, 067904
SAMPLING DATE	11/06/91

CHEMICAL PARAMETERS	RESULTS	UNITS	L	VQ
Semivolatile Organics				
Hexachlorobenzene	0.010	mg/L	4	U
Hexachlorobutadiene	0.010	mg/L	4	U
Hexachlorocyclopentadiene	0.010	mg/L	4	U
Hexachloroethane	0.010	mg/L	4	U
Hexachlorophene	0.050	mg/L	4	U
Hexachloropropene	0.020	mg/L	4	R
Indeno(1,2,3-cd)pyrene	0.010	mg/L	4	U
Isophorone	0.010	mg/L	4	U
Isosafrole	0.010	mg/L	4	U
Methapyrilene	0.040	mg/L	4	UJ
Methyl methanesulfonate	0.010	mg/L	4	U
Methyl parathion	0.003	mg/L	4	UJ
N-Nitroso-di-n-propylamine	0.010	mg/L	4	U
N-Nitrosodi-n-butylamine	0.020	mg/L	4	UJ
N-Nitrosodiethylamine	0.010	mg/L	4	UJ
N-Nitrosodimethylamine	0.010	mg/L	4	U
N-Nitrosodiphenylamine	0.010	mg/L	4	U
N-Nitrosomethylethylamine	0.010	mg/L	4	UJ
N-Nitrosomorpholine	0.010	mg/L	4	UJ
N-Nitrosopiperidine	0.010	mg/L	4	U
N-Nitrosopyrrolidine	0.010	mg/L	4	UJ
Naphthalene	0.010	mg/L	4	U
Nitrobenzene	0.010	mg/L	4	U
O,O,O-Triethylphosphorothioate	0.003	mg/L	4	UJ
Parathion	0.003	mg/L	4	UJ
Pentachlorobenzene	0.020	mg/L	4	UJ
Pentachloroethane	0.020	mg/L	4	U
Pentachloronitrobenzene	0.020	mg/L	4	UJ
Pentachlorophenol	0.050	mg/L	4	U
Phenacetin	0.010	mg/L	4	U
Phenanthrene	0.010	mg/L	4	U
Phenol	0.010	mg/L	4	U
Pronamide	0.030	mg/L	4	U
Pyrene	0.010	mg/L	4	U
Safrole	0.010	mg/L	4	U
Sulfotep	0.003	mg/L	4	UJ
Tributyl phosphate	0.010	mg/L	4	U
a,a-Dimethylphenethylamine	0.010	mg/L	4	UJ
bis(2-Chloroethoxy)methane	0.010	mg/L	4	U
bis(2-Chloroethyl)ether	0.010	mg/L	4	U
bis(2-Chloroisopropyl) ether	0.010	mg/L	4	U
bis(2-Ethylhexyl) phthalate	0.010	mg/L	4	U

000933

6508

TABLE D-14
(Continued)

PHASE I - CHEMICAL PARAMETERS

QC TYPE	TRIP/FIELD BLANK
SAMPLE NUMBER	067901
ASSOCIATED SAMPLES	067902, 067904
SAMPLING DATE	11/06/91

CHEMICAL PARAMETERS	RESULTS	UNITS	L	VQ
Semivolatile Organics				
o-Toluidine	0.010	mg/L	4	U
p-Chloroaniline	0.010	mg/L	4	U
p-Dimethylaminoazobenzene	0.030	mg/L	4	UJ
p-Phenylenediamine	0.050	mg/L	4	U
Herbicide Organics				
Dinoseb	0.020	mg/L	4	UJ
Pesticide Organics/PCBs				
4,4'-DDD	0.000	mg/L	4	U
4,4'-DDE	0.000	mg/L	4	U
4,4'-DDT	0.000	mg/L	4	U
Aldrin	0.000	mg/L	4	U
Aroclor-1016	0.001	mg/L	4	U
Aroclor-1221	0.001	mg/L	4	U
Aroclor-1232	0.001	mg/L	4	U
Aroclor-1242	0.001	mg/L	4	U
Aroclor-1248	0.001	mg/L	4	U
Aroclor-1254	0.001	mg/L	4	U
Aroclor-1260	0.001	mg/L	4	U
Chlorobenzilate	0.000	mg/L	4	U
Dieldrin	0.000	mg/L	4	U
Dimethoate	0.003	mg/L	4	UJ
Disulfoton	0.003	mg/L	4	UJ
Endosulfan II	0.000	mg/L	4	U
Endosulfan sulfate	0.000	mg/L	4	U
Endosulfan-I	0.000	mg/L	4	U
Endrin	0.000	mg/L	4	U
Endrin ketone	0.000	mg/L	4	U
Famphur	0.003	mg/L	4	UJ
Heptachlor	0.000	mg/L	4	U
Heptachlor epoxide	0.000	mg/L	4	U
Isodrin	0.000	mg/L	4	U
Kepone	0.000	mg/L	4	U
Methoxychlor	0.001	mg/L	4	U
Phorate	0.003	mg/L	4	UJ
Tetraethylpyrophosphate	0.003	mg/L	4	UJ
Thionazin	0.003	mg/L	4	UJ
Toxaphene	0.001	mg/L	4	U
alpha-BHC	0.000	mg/L	4	U

TABLE D-14
(Continued)

PHASE I - CHEMICAL PARAMETERS

QC TYPE	TRIP/FIELD BLANK
SAMPLE NUMBER	067901
ASSOCIATED SAMPLES	067902, 067904
SAMPLING DATE	11/06/91

CHEMICAL PARAMETERS	RESULTS	UNITS	L	VQ
Pesticide Organics/PCBs				
alpha-Chlordane	0.001	mg/L	4	U
beta-BHC	0.000	mg/L	4	U
delta-BHC	0.000	mg/L	4	U
gamma-BHC (Lindane)	0.000	mg/L	4	U
gamma-Chlordane	0.001	mg/L	4	U

TABLE D-14
(Continued)

PHASE II - RADIOLOGICAL PARAMETERS

QC TYPE	FIELD BLANK			FIELD BLANK			FIELD BLANK		
SAMPLE NUMBER	114761			114869			114927		
ASSOCIATED SAMPLES	114745, 114743, 114746 114747, 114742			114868			114921, 114924		
SAMPLING DATE	06/03/93			06/09/93			06/13/93		
RADIOLOGICAL PARAMETERS	RESULTS	UNITS	VQ	RESULTS	UNITS	VQ	RESULTS	UNITS	VQ
CS-137	14.600	pci/L	UJ	16.000	pci/L	UJ	10.300	pci/L	UJ
GROSS ALPHA	0.494	pci/L	UJ	0.433	pci/L	UJ	0.445	pci/L	UJ
GROSS BETA	0.992	pci/L	UJ	1.030	pci/L	UJ	1.030	pci/L	UJ
NP-237	0.390	pci/L	N	0.148	pci/L	R	0.219	pci/L	N
PU-238	0.656	pci/L	J	0.071	pci/L	UJ	0.234	pci/L	UJ
PU-239/240	0.170	pci/L	J	0.147	pci/L	UJ	0.134	pci/L	J
RA-226	0.130	pci/L	UJ	0.218	pci/L	UJ	0.135	pci/L	UJ
RA-228	1.190	pci/L	UJ	2.900	pci/L	UJ	2.310	pci/L	UJ
RU-106	143.000	pci/L	UJ	102.000	pci/L	UJ	132.000	pci/L	UJ
SR-90	2.330	pci/L	U	0.800	pci/L	UJ	0.837	pci/L	UJ
TC-99	7.800	pci/L	UJ	9.200	pci/L	UJ	9.400	pci/L	UJ
TH-228	0.220	pci/L	UJ	0.411	pci/L	UJ	0.257	pci/L	UJ
TH-230	1.288	pci/L	J	0.271	pci/L	UJ	0.123	pci/L	J
TH-232	0.297	pci/L	UJ	0.328	pci/L	UJ	0.168	pci/L	UJ
TH-TOTAL	2.730	ug/L	UJ	3.020	ug/L	UJ	1.540	ug/L	UJ
U-234	0.061	pci/L	J	0.101	pci/L	UJ	1.580	pci/L	-
U-235/236	0.051	pci/L	UJ	0.125	pci/L	UJ	0.073	pci/L	J
U-238	0.119	pci/L	UJ	0.123	pci/L	UJ	1.430	pci/L	-
U-TOTAL	1.000	ug/L	U	1.000	ug/L	U	1.000	ug/L	U

TABLE D-14
(Continued)

PHASE II - RADIOLOGICAL PARAMETERS

QC TYPE	RINSATE			RINSATE			RINSATE		
SAMPLE NUMBER	114580			114588			114725		
ASSOCIATED SAMPLES	114579, 114600, 114601, 114602			114581, 114582, 114583 114586, 114587			114609		
SAMPLING DATE	05/10/93			05/11/93			05/26/93		
RADIOLOGICAL PARAMETERS	RESULTS	UNITS	VQ	RESULTS	UNITS	VQ	RESULTS	UNITS	VQ
CS-137	17.400	pci/L	UJ	12.700	pci/L	UJ	20.000	pci/L	UJ
GROSS ALPHA	0.384	pci/L	UJ	0.358	pci/L	UJ	4.000	pci/L	UJ
GROSS BETA	0.948	pci/L	UJ	0.980	pci/L	UJ	4.000	pci/L	UJ
NP-237	0.235	pci/L	N	0.643	pci/L	U	1.000	pci/L	U
PU-238	0.192	pci/L	J	0.096	pci/L	J	1.000	pci/L	J
PU-239/240	0.146	pci/L	J	0.244	pci/L	U	1.000	pci/L	U
RA-226	0.136	pci/L	UJ	1.000	pci/L	R	1.000	pci/L	UJ
RA-228	2.840	pci/L	UJ	3.000	pci/L	R	3.000	pci/L	UJ
RU-106	112.000	pci/L	UJ	118.000	pci/L	UJ	113.000	pci/L	UJ
SR-90	0.711	pci/L	UJ	0.718	pci/L	UJ	5.000	pci/L	UJ
TC-99	10.300	pci/L	UJ	9.000	pci/L	UJ	30.000	pci/L	UJ
TH-228	0.215	pci/L	UJ	0.318	pci/L	UJ	1.000	pci/L	UJ
TH-230	0.489	pci/L	J	0.665	pci/L	J	1.000	pci/L	U
TH-232	0.141	pci/L	UJ	0.235	pci/L	UJ	1.000	pci/L	UJ
TH-TOTAL	1.300	ug/L	UJ	2.160	ug/L	UJ	0.230	ug/L	UJ
U-234	0.127	pci/L	UJ	0.299	pci/L	U	1.000	pci/L	J
U-235/236	0.129	pci/L	UJ	0.668	pci/L	UJ	1.000	pci/L	J
U-238	0.104	pci/L	UJ	0.199	pci/L	U	1.000	pci/L	J
U-TOTAL	0.053	ug/L	J	1.000	ug/L	U	1.000	ug/L	UJ

000937

TABLE D-14
(Continued)

PHASE II - RADIOLOGICAL PARAMETERS

QC TYPE	RINSATE			RINSATE			RINSATE		
SAMPLE NUMBER	114811			114829			114870		
ASSOCIATED SAMPLES	114816			114824			114868		
SAMPLING DATE	06/05/93			06/06/93			06/10/93		
RADIOLOGICAL PARAMETERS	RESULTS	UNITS	VQ	RESULTS	UNITS	VQ	RESULTS	UNITS	VQ
CS-137	15.000	pci/L	UJ	16.000	pci/L	UJ	16.000	pci/L	UJ
GROSS ALPHA	0.480	pci/L	UJ	0.530	pci/L	UJ	0.498	pci/L	UJ
GROSS BETA	0.950	pci/L	UJ	0.950	pci/L	UJ	1.070	pci/L	UJ
NP-237	0.310	pci/L	U	0.540	pci/L	N	0.575	pci/L	N
PU-238	0.012	pci/L	J	0.160	pci/L	J	0.122	pci/L	UJ
PU-239/240	0.210	pci/L	J	0.150	pci/L	UJ	0.253	pci/L	UJ
RA-226	0.210	pci/L	UJ	0.059	pci/L	UJ	0.195	pci/L	R
RA-228	2.590	pci/L	U	1.290	pci/L	U	1.200	pci/L	UJ
RU-106	130.000	pci/L	UJ	130.000	pci/L	UJ	126.000	pci/L	UJ
SR-90	0.720	pci/L	UJ	0.730	pci/L	UJ	0.768	pci/L	UJ
TC-99	10.650	pci/L	UJ	10.840	pci/L	UJ	8.800	pci/L	UJ
TH-228	0.180	pci/L	UJ	0.190	pci/L	UJ	0.273	pci/L	UJ
TH-230	0.230	pci/L	U	0.220	pci/L	U	0.180	pci/L	UJ
TH-232	0.110	pci/L	UJ	0.210	pci/L	UJ	0.179	pci/L	UJ
TH-TOTAL	0.990	ug/L	UJ	1.870	ug/L	UJ	1.650	ug/L	UJ
U-234	0.180	pci/L	UJ	0.081	pci/L	UJ	0.229	pci/L	J
U-235/236	0.110	pci/L	UJ	0.120	pci/L	UJ	0.138	pci/L	UJ
U-238	0.110	pci/L	UJ	0.120	pci/L	UJ	0.356	pci/L	J
U-TOTAL	1.000	ug/L	U	1.000	ug/L	U	1.000	ug/L	U

TABLE D-14
(Continued)

PHASE II - CHEMICAL PARAMETERS

QC TYPE	FIELD BLANK				FIELD BLANK				FIELD BLANK			
SAMPLE NUMBER	114579				114761				114826			
ASSOCIATED SAMPLES	114600, 114602, 114580				114745, 114746, 114747 114742, 114743				114821, 114822, 114823, 114824			
SAMPLING DATE	05/10/93				06/03/93				06/06/93			
CHEMICAL PARAMETERS	RESULTS	UNITS	L	VQ	RESULTS	UNITS	L	VQ	RESULTS	UNITS	L	VQ
Inorganics												
Aluminum	NA				0.030	mg/L	C	U	NA			
Antimony	NA				0.005	mg/L	C	UJ	NA			
Arsenic	NA				0.002	mg/L	C	R	NA			
Barium	NA				0.002	mg/L	C	U	NA			
Beryllium	NA				0.002	mg/L	C	U	NA			
Cadmium	NA				0.005	mg/L	C	UJ	NA			
Calcium	NA				0.020	mg/L	C	U	NA			
Chromium	NA				0.010	mg/L	C	UJ	NA			
Cobalt	NA				0.010	mg/L	C	U	NA			
Copper	NA				0.010	mg/L	C	U	NA			
Cyanide	NA				0.002	mg/L	C	U	NA			
Iron	NA				0.020	mg/L	C	U	NA			
Lead	NA				0.002	mg/L	C	U	NA			
Magnesium	NA				0.050	mg/L	C	U	NA			
Manganese	NA				0.010	mg/L	C	U	NA			
Mercury	NA				0.000	mg/L	C	U	NA			
Molybdenum	NA				0.010	mg/L	C	U	NA			
Nickel	NA				0.020	mg/L	C	UJ	NA			
Potassium	NA				0.100	mg/L	C	U	NA			
Selenium	NA				0.002	mg/L	C	UJ	NA			
Silicon	NA				0.066	mg/L	C	UJ	NA			
Silver	NA				0.010	mg/L	C	U	NA			
Sodium	NA				0.100	mg/L	C	U	NA			
Thallium	NA				0.002	mg/L	C	UJ	NA			
Vanadium	NA				0.010	mg/L	C	U	NA			
Zinc	NA				0.009	mg/L	C	J	NA			
Volatile Organics												
1,1,1-Trichloroethane	0.010	mg/L	C	U	0.010	mg/L	C	U	0.010	mg/L	C	U
1,1,2,2-Tetrachloroethane	0.010	mg/L	C	U	0.010	mg/L	C	U	0.010	mg/L	C	U
1,1,2-Trichloroethane	0.010	mg/L	C	U	0.010	mg/L	C	U	0.010	mg/L	C	U
1,1-Dichloroethane	0.010	mg/L	C	U	0.010	mg/L	C	U	0.010	mg/L	C	U
1,1-Dichloroethene	0.010	mg/L	C	U	0.010	mg/L	C	U	0.010	mg/L	C	U
1,2-Dichloroethane	0.010	mg/L	C	U	0.010	mg/L	C	U	0.010	mg/L	C	U
1,2-Dichloroethene	0.010	mg/L	C	U	0.010	mg/L	C	U	0.010	mg/L	C	U
1,2-Dichloropropane	0.010	mg/L	C	U	0.010	mg/L	C	U	0.010	mg/L	C	U
2-Butanone	0.010	mg/L	C	U	0.010	mg/L	C	U	0.010	mg/L	C	U
2-Hexanone	0.010	mg/L	C	U	0.010	mg/L	C	U	0.010	mg/L	C	U
4-Methyl-2-pentanone	0.010	mg/L	C	U	0.010	mg/L	C	U	0.010	mg/L	C	U
Acetone	0.010	mg/L	C	U	0.010	mg/L	C	U	0.010	mg/L	C	U
Benzene	0.010	mg/L	C	U	0.010	mg/L	C	U	0.010	mg/L	C	U

000039

TABLE D-14
(Continued)

PHASE II - CHEMICAL PARAMETERS

QC TYPE	FIELD BLANK				FIELD BLANK				FIELD BLANK			
SAMPLE NUMBER	114579				114761				114826			
ASSOCIATED SAMPLES	114600, 114602, 114580				114745, 114746, 114747 114742, 114743				114821, 114822, 114823, 114824			
SAMPLING DATE	05/10/93				06/03/93				06/06/93			
CHEMICAL PARAMETERS	RESULTS	UNITS	L	VQ	RESULTS	UNITS	L	VQ	RESULTS	UNITS	L	VQ
Volatile Organics												
Bromodichloromethane	0.010	mg/L	C	U	0.010	mg/L	C	U	0.010	mg/L	C	U
Bromoform	0.010	mg/L	C	U	0.010	mg/L	C	U	0.010	mg/L	C	UJ
Bromomethane	0.010	mg/L	C	U	0.010	mg/L	C	U	0.010	mg/L	C	U
Carbon Tetrachloride	0.010	mg/L	C	U	0.010	mg/L	C	U	0.010	mg/L	C	U
Carbon disulfide	0.010	mg/L	C	U	0.010	mg/L	C	U	0.010	mg/L	C	U
Chlorobenzene	0.010	mg/L	C	U	0.010	mg/L	C	U	0.010	mg/L	C	U
Chloroethane	0.010	mg/L	C	U	0.010	mg/L	C	U	0.010	mg/L	C	U
Chloroform	0.010	mg/L	C	U	0.010	mg/L	C	U	0.010	mg/L	C	U
Chloromethane	0.010	mg/L	C	U	0.010	mg/L	C	U	0.010	mg/L	C	U
Dibromochloromethane	0.010	mg/L	C	U	0.010	mg/L	C	U	0.010	mg/L	C	U
Ethylbenzene	0.010	mg/L	C	U	0.010	mg/L	C	U	0.010	mg/L	C	U
Methylene chloride	0.010	mg/L	C	U	0.010	mg/L	C	U	0.010	mg/L	C	U
Styrene	0.010	mg/L	C	UJ	0.010	mg/L	C	U	0.010	mg/L	C	U
Tetrachloroethene	0.010	mg/L	C	U	0.010	mg/L	C	U	0.010	mg/L	C	U
Toluene	0.010	mg/L	C	U	0.010	mg/L	C	U	0.010	mg/L	C	U
Trichloroethene	0.010	mg/L	C	U	0.010	mg/L	C	U	0.010	mg/L	C	U
Vinyl Acetate	0.010	mg/L	C	U	0.010	mg/L	C	U	0.010	mg/L	C	U
Vinyl chloride	0.010	mg/L	C	U	0.010	mg/L	C	U	0.010	mg/L	C	U
Xylenes, Total	0.010	mg/L	C	U	0.010	mg/L	C	U	0.010	mg/L	C	U
cis-1,3-Dichloropropene	0.010	mg/L	C	U	0.010	mg/L	C	U	0.010	mg/L	C	U
trans-1,3-Dichloropropene	0.010	mg/L	C	U	0.010	mg/L	C	U	0.010	mg/L	C	U
Semivolatile Organics												
1,2,4-Trichlorobenzene	NA				0.010	mg/L	C	U	NA			
1,2-Dichlorobenzene	NA				0.010	mg/L	C	U	NA			
1,3-Dichlorobenzene	NA				0.010	mg/L	C	U	NA			
1,4-Dichlorobenzene	NA				0.010	mg/L	C	U	NA			
2,4,5-Trichlorophenol	NA				0.025	mg/L	C	U	NA			
2,4,6-Trichlorophenol	NA				0.010	mg/L	C	U	NA			
2,4-Dichlorophenol	NA				0.010	mg/L	C	U	NA			
2,4-Dimethylphenol	NA				0.010	mg/L	C	U	NA			
2,4-Dinitrophenol	NA				0.025	mg/L	C	U	NA			
2,4-Dinitrotoluene	NA				0.010	mg/L	C	U	NA			
2,6-Dinitrotoluene	NA				0.010	mg/L	C	U	NA			
2-Benzyl-4-chlorophenol	NA				0.010	mg/L	C	UJ	NA			
2-Chloronaphthalene	NA				0.010	mg/L	C	U	NA			
2-Chlorophenol	NA				0.010	mg/L	C	U	NA			
2-Methylnaphthalene	NA				0.010	mg/L	C	U	NA			
2-Methylphenol	NA				0.010	mg/L	C	U	NA			
2-Nitroaniline	NA				0.025	mg/L	C	U	NA			
2-Nitrophenol	NA				0.010	mg/L	C	U	NA			

TABLE D-14
(Continued)

PHASE II - CHEMICAL PARAMETERS

QC TYPE	FIELD BLANK				FIELD BLANK				FIELD BLANK			
SAMPLE NUMBER	114579				114761				114826			
ASSOCIATED SAMPLES	114600, 114602, 114580				114745, 114746, 114747 114742, 114743				114821, 114822, 114823, 114824			
SAMPLING DATE	05/10/93				06/03/93				06/06/93			
CHEMICAL PARAMETERS	RESULTS	UNITS	L	VQ	RESULTS	UNITS	L	VQ	RESULTS	UNITS	L	VQ
Semivolatile Organics												
3,3'-Dichlorobenzidine	NA				0.010	mg/L	C	U	NA			
3-Nitroaniline	NA				0.025	mg/L	C	U	NA			
4,6-Dinitro-2-methylphenol	NA				0.025	mg/L	C	U	NA			
4-Bromophenyl phenyl ether	NA				0.010	mg/L	C	U	NA			
4-Chloro-3-methylphenol	NA				0.010	mg/L	C	U	NA			
4-Chlorophenylphenyl ether	NA				0.010	mg/L	C	U	NA			
4-Methylphenol	NA				0.010	mg/L	C	U	NA			
4-Nitroaniline	NA				0.025	mg/L	C	U	NA			
4-Nitrophenol	NA				0.025	mg/L	C	U	NA			
Acenaphthene	NA				0.010	mg/L	C	U	NA			
Acenaphthylene	NA				0.010	mg/L	C	U	NA			
Anthracene	NA				0.010	mg/L	C	U	NA			
Benzo(a)anthracene	NA				0.010	mg/L	C	U	NA			
Benzo(a)pyrene	NA				0.010	mg/L	C	U	NA			
Benzo(b)fluoranthene	NA				0.010	mg/L	C	U	NA			
Benzo(g,h,i)perylene	NA				0.010	mg/L	C	U	NA			
Benzo(k)fluoranthene	NA				0.010	mg/L	C	U	NA			
Benzoic acid	NA				0.050	mg/L	C	UJ	NA			
Benzyl alcohol	NA				0.010	mg/L	C	R	NA			
Butyl benzyl phthalate	NA				0.010	mg/L	C	U	NA			
Carbazole	NA				0.010	mg/L	C	U	NA			
Chrysene	NA				0.010	mg/L	C	U	NA			
Di-n-butyl phthalate	NA				0.010	mg/L	C	U	NA			
Di-n-octyl phthalate	NA				0.010	mg/L	C	U	NA			
Dibenzo(a,h)anthracene	NA				0.010	mg/L	C	U	NA			
Dibenzofuran	NA				0.010	mg/L	C	U	NA			
Diethyl phthalate	NA				0.010	mg/L	C	U	NA			
Dimethyl phthalate	NA				0.010	mg/L	C	U	NA			
Fluoranthene	NA				0.010	mg/L	C	U	NA			
Fluorene	NA				0.010	mg/L	C	U	NA			
Hexachlorobenzene	NA				0.010	mg/L	C	U	NA			
Hexachlorobutadiene	NA				0.010	mg/L	C	U	NA			
Hexachlorocyclopentadiene	NA				0.010	mg/L	C	U	NA			
Hexachloroethane	NA				0.010	mg/L	C	U	NA			
Indeno(1,2,3-cd)pyrene	NA				0.010	mg/L	C	U	NA			
Isophorone	NA				0.010	mg/L	C	U	NA			
N-Nitroso-di-n-propylamine	NA				0.010	mg/L	C	U	NA			
N-Nitrosodimethylamine	NA				0.010	mg/L	C	U	NA			
N-Nitrosodiphenylamine	NA				0.010	mg/L	C	U	NA			
Naphthalene	NA				0.010	mg/L	C	U	NA			
Nitrobenzene	NA				0.010	mg/L	C	U	NA			
Pentachlorophenol	NA				0.025	mg/L	C	U	NA			

TABLE D-14
(Continued)

PHASE II - CHEMICAL PARAMETERS

QC TYPE	FIELD BLANK				FIELD BLANK				FIELD BLANK			
SAMPLE NUMBER	114579				114761				114826			
ASSOCIATED SAMPLES	114600, 114602, 114580				114745, 114746, 114747 114742, 114743				114821, 114822, 114823, 114824			
SAMPLING DATE	05/10/93				06/03/93				06/06/93			
CHEMICAL PARAMETERS	RESULTS	UNITS	L	VQ	RESULTS	UNITS	L	VQ	RESULTS	UNITS	L	VQ
Semivolatile Organics												
Phenanthrene	NA				0.010	mg/L	C	U	NA			
Phenol	NA				0.010	mg/L	C	U	NA			
Pyrene	NA				0.010	mg/L	C	U	NA			
Tributyl phosphate	NA				0.010	mg/L	C	U	NA			
bis(2-Chloroethoxy)methane	NA				0.010	mg/L	C	U	NA			
bis(2-Chloroethyl)ether	NA				0.010	mg/L	C	U	NA			
bis(2-Chloroisopropyl) ether	NA				0.010	mg/L	C	U	NA			
bis(2-Ethylhexyl) phthalate	NA				0.010	mg/L	C	U	NA			
p-Chloroaniline	NA				0.010	mg/L	C	U	NA			
Pesticide Organics/PCBs												
4,4'-DDD	NA				0.000	mg/L	C	U	NA			
4,4'-DDE	NA				0.000	mg/L	C	U	NA			
4,4'-DDT	NA				0.000	mg/L	C	U	NA			
Aldrin	NA				0.000	mg/L	C	U	NA			
Aroclor-1016	NA				0.001	mg/L	C	U	NA			
Aroclor-1221	NA				0.002	mg/L	C	U	NA			
Aroclor-1232	NA				0.001	mg/L	C	U	NA			
Aroclor-1242	NA				0.001	mg/L	C	U	NA			
Aroclor-1248	NA				0.001	mg/L	C	U	NA			
Aroclor-1254	NA				0.001	mg/L	C	U	NA			
Aroclor-1260	NA				0.001	mg/L	C	U	NA			
Dieldrin	NA				0.000	mg/L	C	U	NA			
Endosulfan II	NA				0.000	mg/L	C	U	NA			
Endosulfan sulfate	NA				0.000	mg/L	C	U	NA			
Endosulfan-I	NA				0.000	mg/L	C	U	NA			
Endrin	NA				0.000	mg/L	C	U	NA			
Endrin aldehyde	NA				0.000	mg/L	C	UJ	NA			
Endrin ketone	NA				0.000	mg/L	C	U	NA			
Heptachlor	NA				0.000	mg/L	C	U	NA			
Heptachlor epoxide	NA				0.000	mg/L	C	U	NA			
Methoxychlor	NA				0.001	mg/L	C	U	NA			
Toxaphene	NA				0.005	mg/L	C	U	NA			
alpha-BHC	NA				0.000	mg/L	C	U	NA			
alpha-Chlordane	NA				0.000	mg/L	C	U	NA			
beta-BHC	NA				0.000	mg/L	C	U	NA			
delta-BHC	NA				0.000	mg/L	C	UJ	NA			
gamma-BHC (Lindane)	NA				0.000	mg/L	C	U	NA			
gamma-Chlordane	NA				0.000	mg/L	C	U	NA			
General Chemistry												
Alkalinity	NA				2.600	mg/L	B	-	NA			

TABLE D-14
(Continued)

PHASE II - CHEMICAL PARAMETERS

QC TYPE	FIELD BLANK				FIELD BLANK				FIELD BLANK			
SAMPLE NUMBER	114579				114761				114826			
ASSOCIATED SAMPLES	114600, 114602, 114580				114745, 114746, 114747 114742, 114743				114821, 114822, 114823, 114824			
SAMPLING DATE	05/10/93				06/03/93				06/06/93			
CHEMICAL PARAMETERS	RESULTS	UNITS	L	VQ	RESULTS	UNITS	L	VQ	RESULTS	UNITS	L	VQ
General Chemistry												
Ammonia	NA				0.100	mg/L	B	U	NA			
Chloride	NA				0.500	mg/L	B	U	NA			
Fluoride	NA				0.050	mg/L	B	U	NA			
Nitrate	NA				0.100	mg/L	B	R	NA			
Phenols	NA				0.010	mg/kg	B	U	NA			
Sulfate	NA				2.000	mg/L	B	U	NA			
Sulfide	NA				41.800	mg/L	B	-	NA			
Total Kjeldahl Nitrogen	NA				0.500	mg/L	B	U	NA			
Total Organic Carbon	NA				1.000	mg/L	B	U	NA			
Total Organic Halides	NA				0.010	mg/L	B	U	NA			
Total Organic Nitrogen	NA				0.100	mg/L	B	U	NA			
Total Phosphorous	NA				0.040	mg/L	B	-	NA			

000943

TABLE D-14
(Continued)

PHASE II - CHEMICAL PARAMETERS

QC TYPE	FIELD BLANK				FIELD BLANK				TRIP BLANK			
SAMPLE NUMBER	114869				114927				114468			
ASSOCIATED SAMPLES	114868				114921, 114924				114467, 114469			
SAMPLING DATE	06/09/93				06/13/93				05/01/93			
CHEMICAL PARAMETERS	RESULTS	UNITS	L	VQ	RESULTS	UNITS	L	VQ	RESULTS	UNITS	L	VQ
Inorganics												
Aluminum	0.030	mg/L	C	U	0.030	mg/L	C	U	NA			
Antimony	0.059	mg/L	C	U	0.059	mg/L	C	U	NA			
Arsenic	0.001	mg/L	C	U	0.001	mg/L	C	U	NA			
Barium	0.002	mg/L	C	U	0.002	mg/L	C	U	NA			
Beryllium	0.000	mg/L	C	U	0.000	mg/L	C	U	NA			
Cadmium	0.003	mg/L	C	U	0.003	mg/L	C	U	NA			
Calcium	0.051	mg/L	C	U	0.202	mg/L	C	U	NA			
Chromium	0.005	mg/L	C	U	0.005	mg/L	C	U	NA			
Cobalt	0.004	mg/L	C	U	0.004	mg/L	C	U	NA			
Copper	0.003	mg/L	C	U	0.003	mg/L	C	U	NA			
Cyanide	NA				0.002	mg/L	C	U	NA			
Iron	0.034	mg/L	C	U	0.044	mg/L	C	U	NA			
Lead	0.001	mg/L	C	U	0.001	mg/L	C	U	NA			
Magnesium	0.022	mg/L	C	U	0.091	mg/L	C	-	NA			
Manganese	0.001	mg/L	C	U	0.001	mg/L	C	U	NA			
Mercury	0.000	mg/L	C	UJ	0.000	mg/L	C	UJ	NA			
Molybdenum	0.007	mg/L	C	U	0.007	mg/L	C	U	NA			
Nickel	0.021	mg/L	C	U	0.021	mg/L	C	U	NA			
Potassium	2.980	mg/L	C	U	2.980	mg/L	C	U	NA			
Selenium	0.001	mg/L	C	U	0.001	mg/L	C	U	NA			
Silicon	0.059	mg/L	C	U	0.141	mg/L	C	U	NA			
Silver	0.004	mg/L	C	U	0.004	mg/L	C	U	NA			
Sodium	0.091	mg/L	C	U	0.210	mg/L	C	U	NA			
Thallium	0.001	mg/L	C	U	0.001	mg/L	C	U	NA			
Vanadium	0.002	mg/L	C	U	0.002	mg/L	C	U	NA			
Zinc	0.010	mg/L	C	U	0.017	mg/L	C	U	NA			
Volatile Organics												
1,1,1-Trichloroethane	0.010	mg/L	C	U	0.010	mg/L	C	U	0.010	mg/L	C	U
1,1,2,2-Tetrachloroethane	0.010	mg/L	C	U	0.010	mg/L	C	U	0.010	mg/L	C	U
1,1,2-Trichloroethane	0.010	mg/L	C	U	0.010	mg/L	C	U	0.010	mg/L	C	U
1,1-Dichloroethane	0.010	mg/L	C	U	0.010	mg/L	C	U	0.010	mg/L	C	U
1,1-Dichloroethene	0.010	mg/L	C	U	0.010	mg/L	C	U	0.010	mg/L	C	U
1,2-Dichloroethane	0.010	mg/L	C	U	0.010	mg/L	C	U	0.010	mg/L	C	U
1,2-Dichloroethene	0.010	mg/L	C	U	0.010	mg/L	C	U	0.010	mg/L	C	U
1,2-Dichloropropane	0.010	mg/L	C	U	0.010	mg/L	C	U	0.010	mg/L	C	U
2-Butanone	0.010	mg/L	C	U	0.010	mg/L	C	UJ	0.010	mg/L	C	UJ
2-Hexanone	0.010	mg/L	C	UJ	0.010	mg/L	C	UJ	0.010	mg/L	C	U
4-Methyl-2-pentanone	0.010	mg/L	C	U	0.010	mg/L	C	UJ	0.010	mg/L	C	U
Acetone	0.002	mg/L	C	J	0.010	mg/L	C	UJ	0.010	mg/L	C	U
Benzene	0.010	mg/L	C	U	0.010	mg/L	C	U	0.010	mg/L	C	U

TABLE D-14
(Continued)

PHASE II - CHEMICAL PARAMETERS

QC TYPE	FIELD BLANK				FIELD BLANK				TRIP BLANK			
SAMPLE NUMBER	114869				114927				114468			
ASSOCIATED SAMPLES	114868				114921, 114924				114467, 114469			
SAMPLING DATE	06/09/93				06/13/93				05/01/93			
CHEMICAL PARAMETERS	RESULTS	UNITS	L	VQ	RESULTS	UNITS	L	VQ	RESULTS	UNITS	L	VQ
Volatile Organics												
Bromodichloromethane	0.010	mg/L	C	U	0.010	mg/L	C	U	0.010	mg/L	C	U
Bromoform	0.010	mg/L	C	U	0.010	mg/L	C	U	0.010	mg/L	C	U
Bromomethane	0.010	mg/L	C	UJ	0.010	mg/L	C	U	0.010	mg/L	C	U
Carbon Tetrachloride	0.010	mg/L	C	U	0.010	mg/L	C	U	0.010	mg/L	C	U
Carbon disulfide	0.010	mg/L	C	U	0.010	mg/L	C	U	0.010	mg/L	C	U
Chlorobenzene	0.010	mg/L	C	U	0.010	mg/L	C	U	0.010	mg/L	C	U
Chloroethane	0.010	mg/L	C	U	0.010	mg/L	C	U	0.010	mg/L	C	U
Chloroform	0.001	mg/L	C	J	0.001	mg/L	C	J	0.010	mg/L	C	U
Chloromethane	0.010	mg/L	C	UJ	0.010	mg/L	C	U	0.010	mg/L	C	U
Dibromochloromethane	0.010	mg/L	C	U	0.010	mg/L	C	U	0.010	mg/L	C	U
Ethylbenzene	0.010	mg/L	C	U	0.010	mg/L	C	U	0.010	mg/L	C	U
Methylene chloride	0.010	mg/L	C	U	0.010	mg/L	C	U	0.005	mg/L	C	J
Styrene	0.010	mg/L	C	U	0.010	mg/L	C	U	0.010	mg/L	C	U
Tetrachloroethene	0.010	mg/L	C	U	0.010	mg/L	C	U	0.010	mg/L	C	U
Toluene	0.010	mg/L	C	U	0.010	mg/L	C	U	0.010	mg/L	C	U
Trichloroethene	0.010	mg/L	C	U	0.010	mg/L	C	U	0.010	mg/L	C	U
Vinyl Acetate	0.010	mg/L	C	U	0.010	mg/L	C	UJ	NA			
Vinyl chloride	0.010	mg/L	C	U	0.010	mg/L	C	U	0.010	mg/L	C	U
Xylenes, Total	0.010	mg/L	C	U	0.010	mg/L	C	U	0.010	mg/L	C	U
cis-1,3-Dichloropropene	0.010	mg/L	C	U	0.010	mg/L	C	U	0.010	mg/L	C	U
trans-1,3-Dichloropropene	0.010	mg/L	C	U	0.010	mg/L	C	U	0.010	mg/L	C	U
Semivolatile Organics												
1,2,4-Trichlorobenzene	0.010	mg/L	C	U	0.010	mg/L	C	U	NA			
1,2-Dichlorobenzene	0.010	mg/L	C	U	0.010	mg/L	C	U	NA			
1,3-Dichlorobenzene	0.010	mg/L	C	U	0.010	mg/L	C	U	NA			
1,4-Dichlorobenzene	0.010	mg/L	C	U	0.010	mg/L	C	U	NA			
2,4,5-Trichlorophenol	0.025	mg/L	C	U	0.025	mg/L	C	U	NA			
2,4,6-Trichlorophenol	0.010	mg/L	C	U	0.010	mg/L	C	U	NA			
2,4-Dichlorophenol	0.010	mg/L	C	U	0.010	mg/L	C	U	NA			
2,4-Dimethylphenol	0.010	mg/L	C	U	0.010	mg/L	C	U	NA			
2,4-Dinitrophenol	0.025	mg/L	C	UJ	0.025	mg/L	C	R	NA			
2,4-Dinitrotoluene	0.010	mg/L	C	U	0.010	mg/L	C	U	NA			
2,6-Dinitrotoluene	0.010	mg/L	C	U	0.010	mg/L	C	U	NA			
2-Benzyl-4-chlorophenol	0.010	mg/L	C	U	0.010	mg/L	C	U	NA			
2-Chloronaphthalene	0.010	mg/L	C	U	0.010	mg/L	C	U	NA			
2-Chlorophenol	0.010	mg/L	C	U	0.010	mg/L	C	U	NA			
2-Methylnaphthalene	0.010	mg/L	C	U	0.010	mg/L	C	U	NA			
2-Methylphenol	0.010	mg/L	C	U	0.010	mg/L	C	U	NA			
2-Nitroaniline	0.025	mg/L	C	U	0.025	mg/L	C	U	NA			
2-Nitrophenol	0.010	mg/L	C	U	0.010	mg/L	C	U	NA			

000945

TABLE D-14
(Continued)

PHASE II - CHEMICAL PARAMETERS

QC TYPE	FIELD BLANK				FIELD BLANK				TRIP BLANK			
SAMPLE NUMBER	114869				114927				114468			
ASSOCIATED SAMPLES	114868				114921, 114924				114467, 114469			
SAMPLING DATE	06/09/93				06/13/93				05/01/93			
CHEMICAL PARAMETERS	RESULTS	UNITS	L	VQ	RESULTS	UNITS	L	VQ	RESULTS	UNITS	L	VQ
Semivolatile Organics												
3,3'-Dichlorobenzidine	0.010	mg/L	C	U	0.010	mg/L	C	U	NA			
3-Nitroaniline	0.025	mg/L	C	U	0.025	mg/L	C	U	NA			
4,6-Dinitro-2-methylphenol	0.025	mg/L	C	UJ	0.025	mg/L	C	UJ	NA			
4-Bromophenyl phenyl ether	0.010	mg/L	C	U	0.010	mg/L	C	U	NA			
4-Chloro-3-methylphenol	0.010	mg/L	C	U	0.010	mg/L	C	U	NA			
4-Chlorophenylphenyl ether	0.010	mg/L	C	U	0.010	mg/L	C	U	NA			
4-Methylphenol	0.010	mg/L	C	U	0.010	mg/L	C	U	NA			
4-Nitroaniline	0.025	mg/L	C	U	0.025	mg/L	C	U	NA			
4-Nitrophenol	0.025	mg/L	C	U	0.025	mg/L	C	U	NA			
Acenaphthene	0.010	mg/L	C	U	0.010	mg/L	C	U	NA			
Acenaphthylene	0.010	mg/L	C	U	0.010	mg/L	C	U	NA			
Anthracene	0.010	mg/L	C	U	0.010	mg/L	C	U	NA			
Benzo(a)anthracene	0.010	mg/L	C	U	0.010	mg/L	C	U	NA			
Benzo(a)pyrene	0.010	mg/L	C	U	0.010	mg/L	C	U	NA			
Benzo(b)fluoranthene	0.010	mg/L	C	U	0.010	mg/L	C	U	NA			
Benzo(g,h,i)perylene	0.010	mg/L	C	U	0.010	mg/L	C	U	NA			
Benzo(k)fluoranthene	0.010	mg/L	C	U	0.010	mg/L	C	U	NA			
Benzoic acid	0.050	mg/L	C	R	0.050	mg/L	C	UJ	NA			
Benzyl alcohol	0.010	mg/L	C	UJ	0.010	mg/L	C	U	NA			
Butyl benzyl phthalate	0.010	mg/L	C	U	0.010	mg/L	C	U	NA			
Carbazole	0.010	mg/L	C	U	0.010	mg/L	C	U	NA			
Chrysene	0.010	mg/L	C	U	0.010	mg/L	C	UJ	NA			
Di-n-butyl phthalate	0.010	mg/L	C	U	0.010	mg/L	C	U	NA			
Di-n-octyl phthalate	0.010	mg/L	C	U	0.010	mg/L	C	U	NA			
Dibenzo(a,h)anthracene	0.010	mg/L	C	U	0.010	mg/L	C	U	NA			
Dibenzofuran	0.010	mg/L	C	U	0.010	mg/L	C	U	NA			
Diethyl phthalate	0.010	mg/L	C	U	0.010	mg/L	C	U	NA			
Dimethyl phthalate	0.010	mg/L	C	U	0.010	mg/L	C	U	NA			
Fluoranthene	0.010	mg/L	C	U	0.010	mg/L	C	U	NA			
Fluorene	0.010	mg/L	C	U	0.010	mg/L	C	U	NA			
Hexachlorobenzene	0.010	mg/L	C	U	0.010	mg/L	C	U	NA			
Hexachlorobutadiene	0.010	mg/L	C	U	0.010	mg/L	C	U	NA			
Hexachlorocyclopentadiene	0.010	mg/L	C	U	0.010	mg/L	C	U	NA			
Hexachloroethane	0.010	mg/L	C	U	0.010	mg/L	C	U	NA			
Indeno(1,2,3-cd)pyrene	0.010	mg/L	C	U	0.010	mg/L	C	U	NA			
Isophorone	0.010	mg/L	C	U	0.010	mg/L	C	U	NA			
N-Nitroso-di-n-propylamine	0.010	mg/L	C	U	0.010	mg/L	C	U	NA			
N-Nitrosodimethylamine	0.010	mg/L	C	U	0.010	mg/L	C	U	NA			
N-Nitrosodiphenylamine	0.010	mg/L	C	U	0.010	mg/L	C	U	NA			
Naphthalene	0.010	mg/L	C	U	0.010	mg/L	C	U	NA			
Nitrobenzene	0.010	mg/L	C	U	0.010	mg/L	C	U	NA			
Pentachlorophenol	0.025	mg/L	C	U	0.025	mg/L	C	UJ	NA			

TABLE D-14
(Continued)

PHASE II - CHEMICAL PARAMETERS

QC TYPE	FIELD BLANK				FIELD BLANK				TRIP BLANK			
SAMPLE NUMBER	114869				114927				114468			
ASSOCIATED SAMPLES	114868				114921, 114924				114467, 114469			
SAMPLING DATE	06/09/93				06/13/93				05/01/93			
CHEMICAL PARAMETERS	RESULTS	UNITS	L	VQ	RESULTS	UNITS	L	VQ	RESULTS	UNITS	L	VQ
Semivolatile Organics												
Phenanthrene	0.010	mg/L	C	U	0.010	mg/L	C	U	NA			
Phenol	0.010	mg/L	C	U	0.010	mg/L	C	U	NA			
Pyrene	0.010	mg/L	C	U	0.010	mg/L	C	UJ	NA			
Tributyl phosphate	0.010	mg/L	C	U	0.010	mg/L	C	U	NA			
bis(2-Chloroethoxy)methane	0.010	mg/L	C	U	0.010	mg/L	C	U	NA			
bis(2-Chloroethyl)ether	0.010	mg/L	C	U	0.010	mg/L	C	U	NA			
bis(2-Chloroisopropyl) ether	0.010	mg/L	C	U	0.010	mg/L	C	U	NA			
bis(2-Ethylhexyl) phthalate	0.010	mg/L	C	U	0.010	mg/L	C	U	NA			
p-Chloroaniline	0.010	mg/L	C	U	0.010	mg/L	C	U	NA			
Pesticide Organics/PCBs												
4,4'-DDD	0.000	mg/L	C	U	0.000	mg/L	C	U	NA			
4,4'-DDE	0.000	mg/L	C	U	0.000	mg/L	C	U	NA			
4,4'-DDT	0.000	mg/L	C	U	0.000	mg/L	C	U	NA			
Aldrin	0.000	mg/L	C	U	0.000	mg/L	C	U	NA			
Aroclor-1016	0.001	mg/L	C	U	0.001	mg/L	C	U	NA			
Aroclor-1221	0.002	mg/L	C	U	0.002	mg/L	C	U	NA			
Aroclor-1232	0.001	mg/L	C	U	0.001	mg/L	C	U	NA			
Aroclor-1242	0.001	mg/L	C	U	0.001	mg/L	C	U	NA			
Aroclor-1248	0.001	mg/L	C	U	0.001	mg/L	C	U	NA			
Aroclor-1254	0.001	mg/L	C	U	0.001	mg/L	C	U	NA			
Aroclor-1260	0.001	mg/L	C	U	0.001	mg/L	C	U	NA			
Dieldrin	0.000	mg/L	C	U	0.000	mg/L	C	U	NA			
Endosulfan II	0.000	mg/L	C	U	0.000	mg/L	C	U	NA			
Endosulfan sulfate	0.000	mg/L	C	U	0.000	mg/L	C	U	NA			
Endosulfan-I	0.000	mg/L	C	U	0.000	mg/L	C	U	NA			
Endrin	0.000	mg/L	C	U	0.000	mg/L	C	U	NA			
Endrin aldehyde	0.000	mg/L	C	UJ	0.000	mg/L	C	UJ	NA			
Endrin ketone	0.000	mg/L	C	U	0.000	mg/L	C	U	NA			
Heptachlor	NA				0.000	mg/L	C	U	NA			
Heptachlor epoxide	0.000	mg/L	C	U	0.000	mg/L	C	U	NA			
Methoxychlor	0.001	mg/L	C	U	0.001	mg/L	C	U	NA			
Toxaphene	0.005	mg/L	C	U	0.005	mg/L	C	U	NA			
alpha-BHC	0.000	mg/L	C	U	0.000	mg/L	C	U	NA			
alpha-Chlordane	0.000	mg/L	C	U	0.000	mg/L	C	U	NA			
beta-BHC	0.000	mg/L	C	U	0.000	mg/L	C	U	NA			
delta-BHC	0.000	mg/L	C	UJ	0.000	mg/L	C	UJ	NA			
gamma-BHC (Lindane)	0.000	mg/L	C	U	0.000	mg/L	C	U	NA			
gamma-Chlordane	0.000	mg/L	C	U	0.000	mg/L	C	U	NA			
General Chemistry												
Alkalinity	NA				2.300	mg/L	B	-	NA			

TABLE D-14
(Continued)

PHASE II - CHEMICAL PARAMETERS

QC TYPE	FIELD BLANK				FIELD BLANK				TRIP BLANK			
SAMPLE NUMBER	114869				114927				114468			
ASSOCIATED SAMPLES	114868				114921, 114924				114467, 114469			
SAMPLING DATE	06/09/93				06/13/93				05/01/93			
CHEMICAL PARAMETERS	RESULTS	UNITS	L	VQ	RESULTS	UNITS	L	VQ	RESULTS	UNITS	L	VQ
General Chemistry												
Ammonia	0.100	mg/L	B	U	0.100	mg/L	B	U	NA			
Chloride	0.500	mg/L	B	U	0.500	mg/L	B	U	NA			
Fluoride	0.050	mg/L	B	U	0.050	mg/L	B	U	NA			
Nitrate	0.100	mg/L	B	R	0.100	mg/L	B	R	NA			
Phenols	0.010	mg/L	B	U	0.010	mg/L	B	U	NA			
Phosphorus	0.020	mg/L	B	U	0.070	mg/L	B	-	NA			
Sulfate	2.000	mg/L	B	U	2.000	mg/L	B	U	NA			
Sulfide	0.500	mg/L	B	UJ	0.500	mg/L	B	U	NA			
Total Kjeldahl Nitrogen	0.100	mg/L	B	U	0.100	mg/L	B	U	NA			
Total Organic Carbon	1.000	mg/L	B	U	1.000	mg/L	B	U	NA			
Total Organic Halides	10.000	mg/L	B	U	0.010	mg/L	B	UJ	NA			
Total Organic Nitrogen	0.100	mg/L	B	U	0.100	mg/L	B	U	NA			

TABLE D-14
(Continued)

PHASE II - CHEMICAL PARAMETERS

QC TYPE	RINSATE				RINSATE				RINSATE			
SAMPLE NUMBER	114580				114588				114725			
ASSOCIATED SAMPLES	114600, 114602				114581, 114583				114609			
SAMPLING DATE	05/10/93				05/11/93				05/26/93			
CHEMICAL PARAMETERS	RESULTS	UNITS	L	VQ	RESULTS	UNITS	L	VQ	RESULTS	UNITS	L	VQ
Inorganics												
Aluminum	0.008	mg/L	C	U	0.006	mg/L	C	U	0.105	mg/L	C	U
Antimony	0.002	mg/L	C	U	0.002	mg/L	C	U	0.005	mg/L	C	UJ
Arsenic	0.001	mg/L	C	U	0.001	mg/L	C	U	0.002	mg/L	C	U
Barium	0.001	mg/L	C	U	0.001	mg/L	C	U	0.002	mg/L	C	U
Beryllium	0.001	mg/L	C	U	0.001	mg/L	C	U	0.002	mg/L	C	U
Cadmium	0.002	mg/L	C	U	0.002	mg/L	C	U	0.005	mg/L	C	U
Calcium	0.044	mg/L	C	U	0.082	mg/L	C	U	1.190	mg/L	C	-
Chromium	0.004	mg/L	C	U	0.004	mg/L	C	U	0.010	mg/L	C	U
Cobalt	0.003	mg/L	C	U	0.003	mg/L	C	U	0.010	mg/L	C	U
Copper	0.004	mg/L	C	U	0.002	mg/L	C	U	0.010	mg/L	C	UJ
Cyanide	0.001	mg/L	C	U	0.001	mg/L	C	U	0.002	mg/L	C	U
Iron	0.085	mg/L	C	-	0.021	mg/L	C	U	0.020	mg/L	C	UJ
Lead	0.001	mg/L	C	U	0.001	mg/L	C	U	0.002	mg/L	C	U
Magnesium	0.039	mg/L	C	U	0.025	mg/L	C	U	0.093	mg/L	C	-
Manganese	0.002	mg/L	C	U	0.002	mg/L	C	U	0.010	mg/L	C	U
Mercury	0.000	mg/L	C	U	0.000	mg/L	C	U	0.000	mg/L	C	U
Molybdenum	0.003	mg/L	C	U	0.003	mg/L	C	U	0.010	mg/L	C	U
Nickel	0.003	mg/L	C	U	0.003	mg/L	C	U	0.020	mg/L	C	U
Potassium	0.089	mg/L	C	U	0.092	mg/L	C	U	0.100	mg/L	C	U
Selenium	0.001	mg/L	C	U	0.001	mg/L	C	U	0.002	mg/L	C	U
Silicon	0.060	mg/L	C	U	0.089	mg/L	C	U	0.226	mg/L	C	R
Silver	0.002	mg/L	C	U	0.002	mg/L	C	U	0.010	mg/L	C	U
Sodium	0.035	mg/L	C	U	0.110	mg/L	C	-	0.100	mg/L	C	U
Thallium	0.001	mg/L	C	U	0.001	mg/L	C	UJ	0.002	mg/L	C	U
Vanadium	0.001	mg/L	C	U	0.001	mg/L	C	U	0.010	mg/L	C	U
Zinc	0.014	mg/L	C	U	0.005	mg/L	C	U	0.005	mg/L	C	U
Volatile Organics												
1,1,1-Trichloroethane	0.010	mg/L	C	U	0.010	mg/L	C	U	0.010	mg/L	C	U
1,1,2,2-Tetrachloroethane	0.010	mg/L	C	U	0.010	mg/L	C	U	0.010	mg/L	C	U
1,1,2-Trichloroethane	0.010	mg/L	C	U	0.010	mg/L	C	U	0.010	mg/L	C	U
1,1-Dichloroethane	0.010	mg/L	C	U	0.010	mg/L	C	U	0.010	mg/L	C	U
1,1-Dichloroethene	0.010	mg/L	C	U	0.010	mg/L	C	U	0.010	mg/L	C	U
1,2-Dichloroethane	0.010	mg/L	C	U	0.010	mg/L	C	U	0.010	mg/L	C	U
1,2-Dichloroethene	0.010	mg/L	C	U	0.010	mg/L	C	U	0.010	mg/L	C	U
1,2-Dichloropropane	0.010	mg/L	C	U	0.010	mg/L	C	U	0.010	mg/L	C	U
2-Butanone	0.010	mg/L	C	U	0.010	mg/L	C	U	0.010	mg/L	C	U
2-Hexanone	0.010	mg/L	C	U	0.010	mg/L	C	U	0.010	mg/L	C	U
4-Methyl-2-pentanone	0.010	mg/L	C	U	0.010	mg/L	C	U	0.010	mg/L	C	U
Acetone	0.010	mg/L	C	U	0.010	mg/L	C	U	0.010	mg/L	C	UJ
Benzene	0.010	mg/L	C	U	0.010	mg/L	C	U	0.010	mg/L	C	U

000949

TABLE D-14
(Continued)

PHASE II - CHEMICAL PARAMETERS

QC TYPE	RINSATE				RINSATE				RINSATE			
SAMPLE NUMBER	114580				114588				114725			
ASSOCIATED SAMPLES	114600, 114602				114581, 114583				114609			
SAMPLING DATE	05/10/93				05/11/93				05/26/93			
CHEMICAL PARAMETERS	RESULTS	UNITS	L	VQ	RESULTS	UNITS	L	VQ	RESULTS	UNITS	L	VQ
Volatile Organics												
Bromodichloromethane	0.010	mg/L	C	U	0.010	mg/L	C	U	0.010	mg/L	C	U
Bromoform	0.010	mg/L	C	U	0.010	mg/L	C	U	0.010	mg/L	C	U
Bromomethane	0.010	mg/L	C	U	0.010	mg/L	C	U	0.010	mg/L	C	U
Carbon Tetrachloride	0.010	mg/L	C	U	0.010	mg/L	C	U	0.010	mg/L	C	U
Carbon disulfide	0.010	mg/L	C	U	0.010	mg/L	C	U	0.010	mg/L	C	U
Chlorobenzene	0.010	mg/L	C	U	0.010	mg/L	C	U	0.010	mg/L	C	U
Chloroethane	0.010	mg/L	C	U	0.010	mg/L	C	U	0.010	mg/L	C	UJ
Chloroform	0.010	mg/L	C	U	0.010	mg/L	C	U	0.010	mg/L	C	U
Chloromethane	0.010	mg/L	C	U	0.010	mg/L	C	U	0.010	mg/L	C	UJ
Dibromochloromethane	0.010	mg/L	C	U	0.010	mg/L	C	U	0.010	mg/L	C	U
Ethylbenzene	0.010	mg/L	C	U	0.010	mg/L	C	U	0.010	mg/L	C	U
Methylene chloride	0.010	mg/L	C	U	0.010	mg/L	C	U	0.010	mg/L	C	UJ
Styrene	0.010	mg/L	C	U	0.010	mg/L	C	UJ	0.010	mg/L	C	U
Tetrachloroethene	0.010	mg/L	C	U	0.010	mg/L	C	U	0.010	mg/L	C	UJ
Toluene	0.010	mg/L	C	U	0.003	mg/L	C	J	0.010	mg/L	C	U
Trichloroethene	0.010	mg/L	C	U	0.010	mg/L	C	U	0.010	mg/L	C	U
Vinyl Acetate	0.010	mg/L	C	U	0.010	mg/L	C	U	0.010	mg/L	C	U
Vinyl chloride	0.010	mg/L	C	U	0.010	mg/L	C	U	0.010	mg/L	C	U
Xylenes, Total	0.010	mg/L	C	U	0.010	mg/L	C	U	0.010	mg/L	C	U
cis-1,3-Dichloropropene	0.010	mg/L	C	U	0.010	mg/L	C	U	0.010	mg/L	C	U
trans-1,3-Dichloropropene	0.010	mg/L	C	U	0.010	mg/L	C	U	0.010	mg/L	C	U
Semivolatile Organics												
1,2,4-Trichlorobenzene	0.010	mg/L	C	U	0.010	mg/L	C	U	0.010	mg/L	C	U
1,2-Dichlorobenzene	0.010	mg/L	C	U	0.010	mg/L	C	U	0.010	mg/L	C	U
1,3-Dichlorobenzene	0.010	mg/L	C	U	0.010	mg/L	C	U	0.010	mg/L	C	U
1,4-Dichlorobenzene	0.010	mg/L	C	U	0.010	mg/L	C	U	0.010	mg/L	C	U
2,4,5-Trichlorophenol	0.025	mg/L	C	U	0.025	mg/L	C	U	0.025	mg/L	C	U
2,4,6-Trichlorophenol	0.010	mg/L	C	U	0.010	mg/L	C	U	0.010	mg/L	C	U
2,4-Dichlorophenol	0.010	mg/L	C	U	0.010	mg/L	C	U	0.010	mg/L	C	U
2,4-Dimethylphenol	0.010	mg/L	C	U	0.010	mg/L	C	U	0.010	mg/L	C	U
2,4-Dinitrophenol	0.025	mg/L	C	UJ	0.025	mg/L	C	U	0.025	mg/L	C	UJ
2,4-Dinitrotoluene	0.010	mg/L	C	U	0.010	mg/L	C	U	0.010	mg/L	C	U
2,6-Dinitrotoluene	0.010	mg/L	C	U	0.010	mg/L	C	U	0.010	mg/L	C	U
2-Chloronaphthalene	0.010	mg/L	C	U	0.010	mg/L	C	U	0.010	mg/L	C	U
2-Chlorophenol	0.010	mg/L	C	U	0.010	mg/L	C	U	0.010	mg/L	C	U
2-Methylnaphthalene	0.010	mg/L	C	U	0.010	mg/L	C	U	0.010	mg/L	C	U
2-Methylphenol	0.010	mg/L	C	U	0.010	mg/L	C	U	0.010	mg/L	C	U
2-Nitroaniline	0.025	mg/L	C	U	0.025	mg/L	C	U	0.025	mg/L	C	U
2-Nitrophenol	0.010	mg/L	C	U	0.010	mg/L	C	U	0.010	mg/L	C	U
3,3'-Dichlorobenzidine	0.010	mg/L	C	U	0.010	mg/L	C	U	0.010	mg/L	C	UJ

TABLE D-14
(Continued)

PHASE II - CHEMICAL PARAMETERS

QC TYPE	RINSATE				RINSATE				RINSATE			
SAMPLE NUMBER	114580				114588				114725			
ASSOCIATED SAMPLES	114600, 114602				114581, 114583				114609			
SAMPLING DATE	05/10/93				05/11/93				05/26/93			
CHEMICAL PARAMETERS	RESULTS	UNITS	L	VQ	RESULTS	UNITS	L	VQ	RESULTS	UNITS	L	VQ
Semivolatile Organics												
3-Nitroaniline	0.025	mg/L	C	U	0.025	mg/L	C	U	0.025	mg/L	C	U
4,6-Dinitro-2-methylphenol	0.025	mg/L	C	U	0.025	mg/L	C	R	0.025	mg/L	C	U
4-Bromophenyl phenyl ether	0.010	mg/L	C	U	0.010	mg/L	C	U	0.010	mg/L	C	U
4-Chloro-3-methylphenol	0.010	mg/L	C	U	0.010	mg/L	C	U	0.010	mg/L	C	U
4-Chlorophenylphenyl ether	0.010	mg/L	C	U	0.010	mg/L	C	U	0.010	mg/L	C	U
4-Methylphenol	0.010	mg/L	C	U	0.010	mg/L	C	U	0.010	mg/L	C	U
4-Nitroaniline	0.025	mg/L	C	UJ	0.025	mg/L	C	R	0.025	mg/L	C	U
4-Nitrophenol	0.025	mg/L	C	U	0.025	mg/L	C	U	0.025	mg/L	C	U
Acenaphthene	0.010	mg/L	C	U	0.010	mg/L	C	U	0.010	mg/L	C	U
Acenaphthylene	0.010	mg/L	C	U	0.010	mg/L	C	U	0.010	mg/L	C	U
Anthracene	0.010	mg/L	C	U	0.010	mg/L	C	U	0.010	mg/L	C	U
Benzo(a)anthracene	0.010	mg/L	C	U	0.010	mg/L	C	U	0.010	mg/L	C	U
Benzo(a)pyrene	0.010	mg/L	C	U	0.010	mg/L	C	U	0.010	mg/L	C	U
Benzo(b)fluoranthene	0.010	mg/L	C	U	0.010	mg/L	C	U	0.010	mg/L	C	U
Benzo(g,h,i)perylene	0.010	mg/L	C	U	0.010	mg/L	C	U	0.010	mg/L	C	U
Benzo(k)fluoranthene	0.010	mg/L	C	U	0.010	mg/L	C	U	0.010	mg/L	C	U
Benzoic acid	NA				0.050	mg/L	C	U	NA			
Benzyl alcohol	NA				0.010	mg/L	C	U	NA			
Butyl benzyl phthalate	0.010	mg/L	C	U	0.002	mg/L	C	J	0.010	mg/L	C	U
Carbazole	0.010	mg/L	C	U	0.010	mg/L	C	U	0.010	mg/L	C	U
Chrysene	0.010	mg/L	C	U	0.010	mg/L	C	U	0.010	mg/L	C	U
Di-n-butyl phthalate	0.010	mg/L	C	U	0.004	mg/L	C	J	0.010	mg/L	C	U
Di-n-octyl phthalate	0.010	mg/L	C	U	0.010	mg/L	C	U	0.010	mg/L	C	U
Dibenzo(a,h)anthracene	0.010	mg/L	C	U	0.010	mg/L	C	U	0.010	mg/L	C	U
Dibenzofuran	0.010	mg/L	C	U	0.010	mg/L	C	U	0.010	mg/L	C	U
Diethyl phthalate	0.010	mg/L	C	U	0.010	mg/L	C	U	0.010	mg/L	C	U
Dimethyl phthalate	0.010	mg/L	C	U	0.010	mg/L	C	U	0.010	mg/L	C	U
Fluoranthene	0.010	mg/L	C	U	0.010	mg/L	C	U	0.010	mg/L	C	U
Fluorene	0.010	mg/L	C	U	0.010	mg/L	C	U	0.010	mg/L	C	U
Hexachlorobenzene	0.010	mg/L	C	U	0.010	mg/L	C	U	0.010	mg/L	C	U
Hexachlorobutadiene	0.010	mg/L	C	U	0.010	mg/L	C	U	0.010	mg/L	C	U
Hexachlorocyclopentadiene	0.010	mg/L	C	U	0.010	mg/L	C	U	0.010	mg/L	C	UJ
Hexachloroethane	0.010	mg/L	C	U	0.010	mg/L	C	U	0.010	mg/L	C	U
Indeno(1,2,3-cd)pyrene	0.010	mg/L	C	U	0.010	mg/L	C	U	0.010	mg/L	C	U
Isophorone	0.010	mg/L	C	U	0.010	mg/L	C	U	0.010	mg/L	C	U
N-Nitroso-di-n-propylamine	0.010	mg/L	C	UJ	0.010	mg/L	C	U	0.010	mg/L	C	U
N-Nitrosodiphenylamine	0.010	mg/L	C	U	0.010	mg/L	C	U	0.010	mg/L	C	U
Naphthalene	0.010	mg/L	C	U	0.010	mg/L	C	U	0.010	mg/L	C	U
Nitrobenzene	0.010	mg/L	C	U	0.010	mg/L	C	U	0.010	mg/L	C	U
Pentachlorophenol	0.025	mg/L	C	U	0.025	mg/L	C	U	0.025	mg/L	C	U
Phenanthrene	0.010	mg/L	C	U	0.010	mg/L	C	U	0.010	mg/L	C	U
Phenol	0.010	mg/L	C	U	0.010	mg/L	C	U	0.010	mg/L	C	U

000954

TABLE D-14
(Continued)

PHASE II - CHEMICAL PARAMETERS

QC TYPE	RINSATE				RINSATE				RINSATE			
SAMPLE NUMBER	114580				114588				114725			
ASSOCIATED SAMPLES	114600, 114602				114581, 114583				114609			
SAMPLING DATE	05/10/93				05/11/93				05/26/93			
CHEMICAL PARAMETERS	RESULTS	UNITS	L	VQ	RESULTS	UNITS	L	VQ	RESULTS	UNITS	L	VQ
Semivolatile Organics												
Pyrene	0.010	mg/L	C	U	0.010	mg/L	C	U	0.010	mg/L	C	U
bis(2-Chloroethoxy)methane	0.010	mg/L	C	U	0.010	mg/L	C	U	0.010	mg/L	C	U
bis(2-Chloroethyl)ether	0.010	mg/L	C	U	0.010	mg/L	C	U	0.010	mg/L	C	U
bis(2-Chloroisopropyl) ether	0.010	mg/L	C	U	0.010	mg/L	C	UJ	0.010	mg/L	C	U
bis(2-Ethylhexyl) phthalate	0.010	mg/L	C	U	0.005	mg/L	C	J	0.010	mg/L	C	U
p-Chloroaniline	0.010	mg/L	C	U	0.010	mg/L	C	U	0.010	mg/L	C	U
Pesticide Organics/PCBs												
4,4'-DDD	0.000	mg/L	C	U	0.000	mg/L	C	U	0.000	mg/L	C	U
4,4'-DDE	0.000	mg/L	C	U	0.000	mg/L	C	U	0.000	mg/L	C	U
4,4'-DDT	0.000	mg/L	C	U	0.000	mg/L	C	U	0.000	mg/L	C	U
Aldrin	0.000	mg/L	C	U	0.000	mg/L	C	U	0.000	mg/L	C	U
Aroclor-1016	0.001	mg/L	C	U	0.001	mg/L	C	U	0.001	mg/L	C	U
Aroclor-1221	0.002	mg/L	C	U	0.002	mg/L	C	U	0.002	mg/L	C	U
Aroclor-1232	0.001	mg/L	C	U	0.001	mg/L	C	U	0.001	mg/L	C	U
Aroclor-1242	0.001	mg/L	C	U	0.001	mg/L	C	U	0.001	mg/L	C	U
Aroclor-1248	0.001	mg/L	C	U	0.001	mg/L	C	U	0.001	mg/L	C	U
Aroclor-1254	0.001	mg/L	C	U	0.001	mg/L	C	U	0.001	mg/L	C	U
Aroclor-1260	0.001	mg/L	C	U	0.001	mg/L	C	U	0.001	mg/L	C	U
Dieldrin	0.000	mg/L	C	U	0.000	mg/L	C	U	0.000	mg/L	C	U
Endosulfan II	0.000	mg/L	C	U	0.000	mg/L	C	U	0.000	mg/L	C	U
Endosulfan sulfate	0.000	mg/L	C	U	0.000	mg/L	C	U	0.000	mg/L	C	U
Endosulfan-I	0.000	mg/L	C	U	0.000	mg/L	C	U	0.000	mg/L	C	U
Endrin	0.000	mg/L	C	U	0.000	mg/L	C	U	0.000	mg/L	C	U
Endrin aldehyde	0.000	mg/L	C	U	0.000	mg/L	C	U	0.000	mg/L	C	U
Endrin ketone	0.000	mg/L	C	U	0.000	mg/L	C	U	0.000	mg/L	C	U
Heptachlor	0.000	mg/L	C	U	0.000	mg/L	C	U	0.000	mg/L	C	U
Heptachlor epoxide	0.000	mg/L	C	U	0.000	mg/L	C	U	0.000	mg/L	C	U
Methoxychlor	0.001	mg/L	C	UJ	0.001	mg/L	C	U	0.001	mg/L	C	U
Toxaphene	0.005	mg/L	C	U	0.005	mg/L	C	U	0.005	mg/L	C	U
alpha-BHC	0.000	mg/L	C	U	0.000	mg/L	C	U	0.000	mg/L	C	U
alpha-Chlordane	0.000	mg/L	C	U	0.000	mg/L	C	U	0.000	mg/L	C	U
beta-BHC	0.000	mg/L	C	U	0.000	mg/L	C	U	0.000	mg/L	C	U
delta-BHC	0.000	mg/L	C	U	0.000	mg/L	C	U	0.000	mg/L	C	U
gamma-BHC (Lindane)	0.000	mg/L	C	U	0.000	mg/L	C	U	0.000	mg/L	C	U
gamma-Chlordane	0.000	mg/L	C	U	0.000	mg/L	C	U	0.000	mg/L	C	U

TABLE D-14
(Continued)

PHASE II - CHEMICAL PARAMETERS

QC TYPE	RINSATE				RINSATE				RINSATE			
SAMPLE NUMBER	114811				114829				114870			
ASSOCIATED SAMPLES	114816, 114812, 114814, 114815				114821				114868			
SAMPLING DATE	06/05/93				06/06/93				06/10/93			
CHEMICAL PARAMETERS	RESULTS	UNITS	L	VQ	RESULTS	UNITS	L	VQ	RESULTS	UNITS	L	VQ
Inorganics												
Aluminum	0.030	mg/L	C	U	0.030	mg/L	C	U	0.030	mg/L	C	U
Antimony	0.059	mg/L	C	UJ	0.059	mg/L	C	UJ	0.059	mg/L	C	U
Arsenic	0.001	mg/L	C	R	0.001	mg/L	C	R	0.001	mg/L	C	U
Barium	0.002	mg/L	C	U	0.002	mg/L	C	U	0.002	mg/L	C	U
Beryllium	0.000	mg/L	C	U	0.000	mg/L	C	U	0.000	mg/L	C	U
Cadmium	0.003	mg/L	C	UJ	0.003	mg/L	C	UJ	0.003	mg/L	C	U
Calcium	0.034	mg/L	C	U	0.098	mg/L	C	U	0.064	mg/L	C	U
Chromium	0.005	mg/L	C	UJ	0.005	mg/L	C	UJ	0.005	mg/L	C	U
Cobalt	0.004	mg/L	C	U	0.004	mg/L	C	U	0.004	mg/L	C	U
Copper	0.003	mg/L	C	U	0.004	mg/L	C	U	0.004	mg/L	C	U
Cyanide	0.002	mg/L	C	U	0.002	mg/L	C	U	NA			
Iron	0.022	mg/L	C	-	0.057	mg/L	C	-	0.023	mg/L	C	U
Lead	0.001	mg/L	C	U	0.001	mg/L	C	U	0.001	mg/L	C	U
Magnesium	0.025	mg/L	C	U	0.029	mg/L	C	U	0.024	mg/L	C	U
Manganese	0.001	mg/L	C	U	0.001	mg/L	C	U	0.001	mg/L	C	U
Mercury	0.000	mg/L	C	U	0.000	mg/L	C	U	0.000	mg/L	C	UJ
Molybdenum	0.007	mg/L	C	U	0.007	mg/L	C	U	0.007	mg/L	C	U
Nickel	0.021	mg/L	C	UJ	0.021	mg/L	C	UJ	0.021	mg/L	C	U
Potassium	2.980	mg/L	C	U	2.980	mg/L	C	U	2.980	mg/L	C	U
Selenium	0.002	mg/L	C	UJ	0.001	mg/L	C	UJ	0.001	mg/L	C	U
Silicon	0.063	mg/L	C	UJ	0.061	mg/L	C	UJ	0.057	mg/L	C	U
Silver	0.004	mg/L	C	U	0.006	mg/L	C	U	0.004	mg/L	C	U
Sodium	0.021	mg/L	C	U	0.027	mg/L	C	U	0.058	mg/L	C	U
Thallium	0.001	mg/L	C	UJ	0.001	mg/L	C	UJ	0.001	mg/L	C	U
Vanadium	0.002	mg/L	C	U	0.003	mg/L	C	U	0.002	mg/L	C	U
Zinc	0.014	mg/L	C	UJ	0.007	mg/L	C	UJ	0.011	mg/L	C	U
Volatile Organics												
1,1,1-Trichloroethane	0.010	mg/L	C	U	0.010	mg/L	C	U	0.010	mg/L	C	U
1,1,2,2-Tetrachloroethane	0.010	mg/L	C	U	0.010	mg/L	C	U	0.010	mg/L	C	U
1,1,2-Trichloroethane	0.010	mg/L	C	U	0.010	mg/L	C	U	0.010	mg/L	C	U
1,1-Dichloroethane	0.010	mg/L	C	U	0.010	mg/L	C	U	0.010	mg/L	C	U
1,1-Dichloroethene	0.010	mg/L	C	U	0.010	mg/L	C	U	0.010	mg/L	C	U
1,2-Dichloroethane	0.010	mg/L	C	U	0.010	mg/L	C	U	0.010	mg/L	C	U
1,2-Dichloroethene	0.010	mg/L	C	U	0.010	mg/L	C	U	0.010	mg/L	C	U
1,2-Dichloropropane	0.010	mg/L	C	U	0.010	mg/L	C	U	0.010	mg/L	C	U
2-Butanone	0.010	mg/L	C	U	0.010	mg/L	C	U	0.010	mg/L	C	U
2-Hexanone	0.010	mg/L	C	U	0.010	mg/L	C	U	0.010	mg/L	C	U
4-Methyl-2-pentanone	0.010	mg/L	C	U	0.010	mg/L	C	U	0.010	mg/L	C	U
Acetone	0.010	mg/L	C	U	0.010	mg/L	C	U	0.010	mg/L	C	U
Benzene	0.010	mg/L	C	U	0.010	mg/L	C	U	0.010	mg/L	C	U

000953

TABLE D-14
(Continued)

PHASE II - CHEMICAL PARAMETERS

QC TYPE	RINSATE				RINSATE				RINSATE			
SAMPLE NUMBER	114811				114829				114870			
ASSOCIATED SAMPLES	114816, 114812, 114814, 114815				114821				114868			
SAMPLING DATE	06/05/93				06/06/93				06/10/93			
CHEMICAL PARAMETERS	RESULTS	UNITS	L	VQ	RESULTS	UNITS	L	VQ	RESULTS	UNITS	L	VQ
Volatile Organics												
Bromodichloromethane	0.010	mg/L	C	U	0.010	mg/L	C	U	0.010	mg/L	C	U
Bromoform	0.010	mg/L	C	UJ	0.010	mg/L	C	UJ	0.010	mg/L	C	U
Bromomethane	0.010	mg/L	C	U	0.010	mg/L	C	U	0.010	mg/L	C	UJ
Carbon Tetrachloride	0.010	mg/L	C	U	0.010	mg/L	C	U	0.010	mg/L	C	U
Carbon disulfide	0.010	mg/L	C	U	0.010	mg/L	C	U	0.010	mg/L	C	U
Chlorobenzene	0.010	mg/L	C	U	0.010	mg/L	C	U	0.010	mg/L	C	U
Chloroethane	0.010	mg/L	C	U	0.010	mg/L	C	U	0.010	mg/L	C	U
Chloroform	0.010	mg/L	C	U	0.010	mg/L	C	U	0.010	mg/L	C	U
Chloromethane	0.010	mg/L	C	U	0.010	mg/L	C	U	0.010	mg/L	C	U
Dibromochloromethane	0.010	mg/L	C	U	0.010	mg/L	C	U	0.010	mg/L	C	U
Ethylbenzene	0.010	mg/L	C	U	0.010	mg/L	C	U	0.010	mg/L	C	U
Methylene chloride	0.010	mg/L	C	U	0.010	mg/L	C	U	0.010	mg/L	C	U
Styrene	0.010	mg/L	C	U	0.010	mg/L	C	U	0.010	mg/L	C	U
Tetrachloroethene	0.010	mg/L	C	U	0.010	mg/L	C	U	0.010	mg/L	C	U
Toluene	0.010	mg/L	C	U	0.010	mg/L	C	U	0.010	mg/L	C	U
Trichloroethene	0.010	mg/L	C	U	0.010	mg/L	C	U	0.010	mg/L	C	U
Vinyl Acetate	0.010	mg/L	C	U	0.010	mg/L	C	U	0.010	mg/L	C	UJ
Vinyl chloride	0.010	mg/L	C	U	0.010	mg/L	C	U	0.010	mg/L	C	U
Xylenes, Total	0.010	mg/L	C	U	0.010	mg/L	C	U	0.010	mg/L	C	U
cis-1,3-Dichloropropene	0.010	mg/L	C	U	0.010	mg/L	C	U	0.010	mg/L	C	U
trans-1,3-Dichloropropene	0.010	mg/L	C	U	0.010	mg/L	C	U	0.010	mg/L	C	U
Semivolatile Organics												
1,2,4-Trichlorobenzene	0.010	mg/L	C	U	0.010	mg/L	C	U	0.010	mg/L	C	U
1,2-Dichlorobenzene	0.010	mg/L	C	U	0.010	mg/L	C	U	0.010	mg/L	C	U
1,3-Dichlorobenzene	0.010	mg/L	C	U	0.010	mg/L	C	U	0.010	mg/L	C	U
1,4-Dichlorobenzene	0.010	mg/L	C	U	0.010	mg/L	C	U	0.010	mg/L	C	U
2,4,5-Trichlorophenol	0.025	mg/L	C	U	0.025	mg/L	C	U	0.025	mg/L	C	U
2,4,6-Trichlorophenol	0.010	mg/L	C	U	0.010	mg/L	C	U	0.010	mg/L	C	U
2,4-Dichlorophenol	0.010	mg/L	C	U	0.010	mg/L	C	U	0.010	mg/L	C	U
2,4-Dimethylphenol	0.010	mg/L	C	U	0.010	mg/L	C	U	0.010	mg/L	C	U
2,4-Dinitrophenol	0.025	mg/L	C	UJ	0.025	mg/L	C	UJ	0.025	mg/L	C	UJ
2,4-Dinitrotoluene	0.010	mg/L	C	U	0.010	mg/L	C	U	0.010	mg/L	C	U
2,6-Dinitrotoluene	0.010	mg/L	C	U	0.010	mg/L	C	U	0.010	mg/L	C	U
2-Benzyl-4-chlorophenol	0.010	mg/L	C	U	0.010	mg/L	C	U	0.010	mg/L	C	U
2-Chloronaphthalene	0.010	mg/L	C	U	0.010	mg/L	C	U	0.010	mg/L	C	U
2-Chlorophenol	0.010	mg/L	C	U	0.010	mg/L	C	U	0.010	mg/L	C	U
2-Methylnaphthalene	0.010	mg/L	C	U	0.010	mg/L	C	U	0.010	mg/L	C	U
2-Methylphenol	0.010	mg/L	C	U	0.010	mg/L	C	U	0.010	mg/L	C	U
2-Nitroaniline	0.025	mg/L	C	U	0.025	mg/L	C	U	0.025	mg/L	C	U
2-Nitrophenol	0.010	mg/L	C	U	0.010	mg/L	C	U	0.010	mg/L	C	U

TABLE D-14
(Continued)

PHASE II - CHEMICAL PARAMETERS

QC TYPE	RINSATE				RINSATE				RINSATE			
SAMPLE NUMBER	114811				114829				114870			
ASSOCIATED SAMPLES	114816, 114812, 114814, 114815				114821				114868			
SAMPLING DATE	06/05/93				06/06/93				06/10/93			
CHEMICAL PARAMETERS	RESULTS	UNITS	L	VQ	RESULTS	UNITS	L	VQ	RESULTS	UNITS	L	VQ
Semivolatile Organics												
3,3'-Dichlorobenzidine	0.010	mg/L	C	U	0.010	mg/L	C	U	0.010	mg/L	C	U
3-Nitroaniline	0.025	mg/L	C	U	0.025	mg/L	C	U	0.025	mg/L	C	U
4,6-Dinitro-2-methylphenol	0.025	mg/L	C	UJ	0.025	mg/L	C	UJ	0.025	mg/L	C	UJ
4-Bromophenyl phenyl ether	0.010	mg/L	C	U	0.010	mg/L	C	U	0.010	mg/L	C	U
4-Chloro-3-methylphenol	0.010	mg/L	C	U	0.010	mg/L	C	U	0.010	mg/L	C	U
4-Chlorophenylphenyl ether	0.010	mg/L	C	U	0.010	mg/L	C	U	0.010	mg/L	C	U
4-Methylphenol	0.010	mg/L	C	U	0.010	mg/L	C	U	0.010	mg/L	C	U
4-Nitroaniline	0.025	mg/L	C	U	0.025	mg/L	C	U	0.025	mg/L	C	U
4-Nitrophenol	0.025	mg/L	C	U	0.025	mg/L	C	U	0.025	mg/L	C	U
Acenaphthene	0.010	mg/L	C	U	0.010	mg/L	C	U	0.010	mg/L	C	U
Acenaphthylene	0.010	mg/L	C	U	0.010	mg/L	C	U	0.010	mg/L	C	U
Anthracene	0.010	mg/L	C	U	0.010	mg/L	C	U	0.010	mg/L	C	U
Benzo(a)anthracene	0.010	mg/L	C	U	0.010	mg/L	C	U	0.010	mg/L	C	U
Benzo(a)pyrene	0.010	mg/L	C	U	0.010	mg/L	C	U	0.010	mg/L	C	U
Benzo(b)fluoranthene	0.010	mg/L	C	U	0.010	mg/L	C	U	0.010	mg/L	C	U
Benzo(g,h,i)perylene	0.010	mg/L	C	U	0.010	mg/L	C	U	0.010	mg/L	C	U
Benzo(k)fluoranthene	0.010	mg/L	C	U	0.010	mg/L	C	U	0.010	mg/L	C	U
Benzoic acid	0.050	mg/L	C	R	0.050	mg/L	C	R	0.050	mg/L	C	R
Benzyl alcohol	0.010	mg/L	C	UJ	0.010	mg/L	C	UJ	0.010	mg/L	C	UJ
Butyl benzyl phthalate	0.010	mg/L	C	U	0.010	mg/L	C	U	0.010	mg/L	C	U
Carbazole	0.010	mg/L	C	U	0.010	mg/L	C	U	0.010	mg/L	C	U
Chrysene	0.010	mg/L	C	U	0.010	mg/L	C	U	0.010	mg/L	C	U
Di-n-butyl phthalate	0.010	mg/L	C	U	0.010	mg/L	C	U	0.010	mg/L	C	U
Di-n-octyl phthalate	0.010	mg/L	C	U	0.010	mg/L	C	U	0.010	mg/L	C	U
Dibenzo(a,h)anthracene	0.010	mg/L	C	U	0.010	mg/L	C	U	0.010	mg/L	C	U
Dibenzofuran	0.010	mg/L	C	U	0.010	mg/L	C	U	0.010	mg/L	C	U
Diethyl phthalate	0.010	mg/L	C	U	0.010	mg/L	C	U	0.010	mg/L	C	U
Dimethyl phthalate	0.010	mg/L	C	U	0.010	mg/L	C	U	0.010	mg/L	C	U
Fluoranthene	0.010	mg/L	C	U	0.010	mg/L	C	U	0.010	mg/L	C	U
Fluorene	0.010	mg/L	C	U	0.010	mg/L	C	U	0.010	mg/L	C	U
Hexachlorobenzene	0.010	mg/L	C	U	0.010	mg/L	C	U	0.010	mg/L	C	U
Hexachlorobutadiene	0.010	mg/L	C	U	0.010	mg/L	C	U	0.010	mg/L	C	U
Hexachlorocyclopentadiene	0.010	mg/L	C	U	0.010	mg/L	C	U	0.010	mg/L	C	U
Hexachloroethane	0.010	mg/L	C	U	0.010	mg/L	C	U	0.010	mg/L	C	U
Indeno(1,2,3-cd)pyrene	0.010	mg/L	C	U	0.010	mg/L	C	U	0.010	mg/L	C	U
Isophorone	0.010	mg/L	C	U	0.010	mg/L	C	U	0.010	mg/L	C	U
N-Nitroso-di-n-propylamine	0.010	mg/L	C	U	0.010	mg/L	C	U	0.010	mg/L	C	U
N-Nitrosodimethylamine	0.010	mg/L	C	U	0.010	mg/L	C	U	0.010	mg/L	C	U
N-Nitrosodiphenylamine	0.010	mg/L	C	U	0.010	mg/L	C	U	0.010	mg/L	C	U
Naphthalene	0.010	mg/L	C	U	0.010	mg/L	C	U	0.010	mg/L	C	U
Nitrobenzene	0.010	mg/L	C	U	0.010	mg/L	C	U	0.010	mg/L	C	U
Pentachlorophenol	0.025	mg/L	C	U	0.025	mg/L	C	U	0.025	mg/L	C	U

000555

TABLE D-14
(Continued)

PHASE II - CHEMICAL PARAMETERS

QC TYPE	RINSATE				RINSATE				RINSATE			
SAMPLE NUMBER	114811				114829				114870			
ASSOCIATED SAMPLES	114816, 114812, 114814, 114815				114821				114868			
SAMPLING DATE	06/05/93				06/06/93				06/10/93			
CHEMICAL PARAMETERS	RESULTS	UNITS	L	VQ	RESULTS	UNITS	L	VQ	RESULTS	UNITS	L	VQ
Semivolatile Organics												
Phenanthrene	0.010	mg/L	C	U	0.010	mg/L	C	U	0.010	mg/L	C	U
Phenol	0.010	mg/L	C	U	0.010	mg/L	C	U	0.010	mg/L	C	U
Pyrene	0.010	mg/L	C	U	0.010	mg/L	C	U	0.010	mg/L	C	U
Tributyl phosphate	0.010	mg/L	C	U	0.010	mg/L	C	U	0.010	mg/L	C	U
bis(2-Chloroethoxy)methane	0.010	mg/L	C	U	0.010	mg/L	C	U	0.010	mg/L	C	U
bis(2-Chloroethyl)ether	0.010	mg/L	C	U	0.010	mg/L	C	U	0.010	mg/L	C	U
bis(2-Chloroisopropyl) ether	0.010	mg/L	C	U	0.010	mg/L	C	U	0.010	mg/L	C	U
bis(2-Ethylhexyl) phthalate	0.010	mg/L	C	U	0.010	mg/L	C	U	0.010	mg/L	C	U
p-Chloroaniline	0.010	mg/L	C	U	0.010	mg/L	C	U	0.010	mg/L	C	U
Pesticide Organics/PCBs												
4,4'-DDD	0.000	mg/L	C	U	0.000	mg/L	C	U	0.000	mg/L	C	U
4,4'-DDE	0.000	mg/L	C	U	0.000	mg/L	C	U	0.000	mg/L	C	U
4,4'-DDT	0.000	mg/L	C	U	0.000	mg/L	C	U	0.000	mg/L	C	U
Aldrin	0.000	mg/L	C	U	0.000	mg/L	C	U	0.000	mg/L	C	U
Aroclor-1016	0.001	mg/L	C	U	0.001	mg/L	C	U	0.001	mg/L	C	U
Aroclor-1221	0.002	mg/L	C	U	0.002	mg/L	C	U	0.002	mg/L	C	U
Aroclor-1232	0.001	mg/L	C	U	0.001	mg/L	C	U	0.001	mg/L	C	U
Aroclor-1242	0.001	mg/L	C	U	0.001	mg/L	C	U	0.001	mg/L	C	U
Aroclor-1248	0.001	mg/L	C	U	0.001	mg/L	C	U	0.001	mg/L	C	U
Aroclor-1254	0.001	mg/L	C	U	0.001	mg/L	C	U	0.001	mg/L	C	U
Aroclor-1260	0.001	mg/L	C	U	0.001	mg/L	C	U	0.001	mg/L	C	U
Dieldrin	0.000	mg/L	C	U	0.000	mg/L	C	U	0.000	mg/L	C	U
Endosulfan II	0.000	mg/L	C	U	0.000	mg/L	C	U	0.000	mg/L	C	U
Endosulfan sulfate	0.000	mg/L	C	U	0.000	mg/L	C	U	0.000	mg/L	C	U
Endosulfan-I	0.000	mg/L	C	U	0.000	mg/L	C	U	0.000	mg/L	C	U
Endrin	0.000	mg/L	C	U	0.000	mg/L	C	U	0.000	mg/L	C	U
Endrin aldehyde	0.000	mg/L	C	UJ	0.000	mg/L	C	UJ	0.000	mg/L	C	UJ
Endrin ketone	0.000	mg/L	C	U	0.000	mg/L	C	U	0.000	mg/L	C	U
Heptachlor	0.000	mg/L	C	U	0.000	mg/L	C	U	0.000	mg/L	C	U
Heptachlor epoxide	0.000	mg/L	C	U	0.000	mg/L	C	U	0.000	mg/L	C	U
Methoxychlor	0.001	mg/L	C	U	0.001	mg/L	C	U	0.001	mg/L	C	U
Toxaphene	0.005	mg/L	C	U	0.005	mg/L	C	U	0.005	mg/L	C	U
alpha-BHC	0.000	mg/L	C	U	0.000	mg/L	C	U	0.000	mg/L	C	U
alpha-Chlordane	0.000	mg/L	C	U	0.000	mg/L	C	U	0.000	mg/L	C	U
beta-BHC	0.000	mg/L	C	U	0.000	mg/L	C	U	0.000	mg/L	C	U
delta-BHC	0.000	mg/L	C	UJ	0.000	mg/L	C	UJ	0.000	mg/L	C	UJ
gamma-BHC (Lindane)	0.000	mg/L	C	U	0.000	mg/L	C	U	0.000	mg/L	C	U
gamma-Chlordane	0.000	mg/L	C	U	0.000	mg/L	C	U	0.000	mg/L	C	U

TABLE D-14
(Continued)

PHASE II - CHEMICAL PARAMETERS

QC TYPE	TRIP BLANK				TRIP BLANK				TRIP BLANK			
SAMPLE NUMBER	110888				110901				110988			
ASSOCIATED SAMPLES	110889				110900				110898			
SAMPLING DATE	04/22/93				04/28/93				05/04/93			
CHEMICAL PARAMETERS	RESULTS	UNITS	L	VQ	RESULTS	UNITS	L	VQ	RESULTS	UNITS	L	VQ
Volatile Organics												
1,1,1-Trichloroethane	0.010	mg/L	C	U	0.010	mg/L	C	U	0.010	mg/L	C	U
1,1,2,2-Tetrachloroethane	0.010	mg/L	C	U	0.010	mg/L	C	U	0.010	mg/L	C	U
1,1,2-Trichloroethane	0.010	mg/L	C	U	0.010	mg/L	C	U	0.010	mg/L	C	U
1,1-Dichloroethane	0.010	mg/L	C	U	0.010	mg/L	C	U	0.010	mg/L	C	U
1,1-Dichloroethene	0.010	mg/L	C	U	0.010	mg/L	C	U	0.010	mg/L	C	U
1,2-Dichloroethane	0.010	mg/L	C	U	0.010	mg/L	C	U	0.010	mg/L	C	U
1,2-Dichloroethene	0.010	mg/L	C	U	0.010	mg/L	C	U	0.010	mg/L	C	U
1,2-Dichloropropane	0.010	mg/L	C	U	0.010	mg/L	C	U	0.010	mg/L	C	U
2-Butanone	0.004	mg/L	C	J	0.002	mg/L	C	-	0.010	mg/L	C	U
2-Hexanone	0.010	mg/L	C	UJ	0.010	mg/L	C	UJ	0.010	mg/L	C	U
4-Methyl-2-pentanone	0.010	mg/L	C	UJ	0.010	mg/L	C	U	0.010	mg/L	C	U
Acetone	0.029	mg/L	C	-	0.007	mg/L	C	U	0.010	mg/L	C	U
Benzene	0.010	mg/L	C	U	0.010	mg/L	C	U	0.010	mg/L	C	U
Bromodichloromethane	0.010	mg/L	C	U	0.010	mg/L	C	U	0.010	mg/L	C	U
Bromoform	0.010	mg/L	C	U	0.010	mg/L	C	U	0.010	mg/L	C	U
Bromomethane	0.010	mg/L	C	U	0.010	mg/L	C	U	0.010	mg/L	C	U
Carbon Tetrachloride	0.010	mg/L	C	U	0.010	mg/L	C	U	0.010	mg/L	C	U
Carbon disulfide	0.010	mg/L	C	U	0.010	mg/L	C	U	0.010	mg/L	C	UJ
Chlorobenzene	0.010	mg/L	C	U	0.010	mg/L	C	U	0.010	mg/L	C	U
Chloroethane	0.010	mg/L	C	U	0.010	mg/L	C	U	0.010	mg/L	C	UJ
Chloroform	0.010	mg/L	C	U	0.010	mg/L	C	U	0.010	mg/L	C	U
Chloromethane	0.010	mg/L	C	U	0.010	mg/L	C	UJ	0.010	mg/L	C	UJ
Dibromochloromethane	0.010	mg/L	C	U	0.010	mg/L	C	U	0.010	mg/L	C	U
Ethylbenzene	0.010	mg/L	C	U	0.010	mg/L	C	U	0.010	mg/L	C	U
Methylene chloride	0.010	mg/L	C	UJ	0.010	mg/L	C	UJ	0.010	mg/L	C	UJ
Styrene	0.010	mg/L	C	U	0.010	mg/L	C	U	0.010	mg/L	C	U
Tetrachloroethene	0.010	mg/L	C	U	0.010	mg/L	C	U	0.010	mg/L	C	U
Toluene	0.010	mg/L	C	U	0.010	mg/L	C	U	0.010	mg/L	C	U
Trichloroethene	0.010	mg/L	C	U	0.010	mg/L	C	U	0.010	mg/L	C	U
Vinyl Acetate	0.010	mg/L	C	U	0.010	mg/L	C	U	0.010	mg/L	C	U
Vinyl chloride	0.010	mg/L	C	U	0.010	mg/L	C	UJ	0.010	mg/L	C	U
Xylenes, Total	0.010	mg/L	C	U	0.010	mg/L	C	U	0.010	mg/L	C	U
cis-1,3-Dichloropropene	0.010	mg/L	C	U	0.010	mg/L	C	U	0.010	mg/L	C	U
trans-1,3-Dichloropropene	0.010	mg/L	C	U	0.010	mg/L	C	U	0.010	mg/L	C	U

TABLE D-14
(Continued)

PHASE II - CHEMICAL PARAMETERS

QC TYPE	TRIP BLANK				TRIP BLANK				TRIP BLANK			
SAMPLE NUMBER	110993				114475				114478			
ASSOCIATED SAMPLES	110994				114474, 114746				114477, 114479			
SAMPLING DATE	05/04/93				05/02/93				05/02/93			
CHEMICAL PARAMETERS	RESULTS	UNITS	L	VQ	RESULTS	UNITS	L	VQ	RESULTS	UNITS	L	VQ
Volatile Organics												
1,1,1-Trichloroethane	0.010	mg/L	C	U	0.010	mg/L	C	U	0.010	mg/L	C	U
1,1,2,2-Tetrachloroethane	0.010	mg/L	C	U	0.010	mg/L	C	UJ	0.010	mg/L	C	U
1,1,2-Trichloroethane	0.010	mg/L	C	U	0.010	mg/L	C	U	0.010	mg/L	C	U
1,1-Dichloroethane	0.010	mg/L	C	U	0.010	mg/L	C	U	0.010	mg/L	C	U
1,1-Dichloroethene	0.010	mg/L	C	U	0.010	mg/L	C	U	0.010	mg/L	C	U
1,2-Dichloroethane	0.010	mg/L	C	U	0.010	mg/L	C	U	0.010	mg/L	C	U
1,2-Dichloroethene	0.010	mg/L	C	U	0.010	mg/L	C	U	0.010	mg/L	C	U
1,2-Dichloropropane	0.010	mg/L	C	U	0.010	mg/L	C	U	0.010	mg/L	C	U
2-Butanone	0.010	mg/L	C	U	0.010	mg/L	C	UJ	0.010	mg/L	C	U
2-Hexanone	0.010	mg/L	C	U	0.010	mg/L	C	UJ	0.010	mg/L	C	U
4-Methyl-2-pentanone	0.010	mg/L	C	U	0.010	mg/L	C	UJ	0.010	mg/L	C	U
Acetone	0.010	mg/L	C	U	0.010	mg/L	C	R	0.020	mg/L	C	-
Benzene	0.010	mg/L	C	U	0.010	mg/L	C	U	0.010	mg/L	C	U
Bromodichloromethane	0.010	mg/L	C	U	0.010	mg/L	C	U	0.010	mg/L	C	U
Bromoform	0.010	mg/L	C	U	0.010	mg/L	C	U	0.010	mg/L	C	U
Bromomethane	0.010	mg/L	C	U	0.010	mg/L	C	U	0.010	mg/L	C	U
Carbon Tetrachloride	0.010	mg/L	C	U	0.010	mg/L	C	U	0.010	mg/L	C	U
Carbon disulfide	0.010	mg/L	C	UJ	0.010	mg/L	C	U	0.010	mg/L	C	U
Chlorobenzene	0.010	mg/L	C	U	0.010	mg/L	C	U	0.010	mg/L	C	U
Chloroethane	0.010	mg/L	C	UJ	0.010	mg/L	C	U	0.010	mg/L	C	U
Chloroform	0.010	mg/L	C	U	0.010	mg/L	C	U	0.010	mg/L	C	U
Chloromethane	0.010	mg/L	C	UJ	0.010	mg/L	C	U	0.010	mg/L	C	U
Dibromochloromethane	0.010	mg/L	C	U	0.010	mg/L	C	U	0.010	mg/L	C	U
Ethylbenzene	0.010	mg/L	C	U	0.010	mg/L	C	U	0.010	mg/L	C	U
Methylene chloride	0.010	mg/L	C	UJ	0.010	mg/L	C	U	0.010	mg/L	C	U
Styrene	0.010	mg/L	C	U	0.010	mg/L	C	U	0.010	mg/L	C	U
Tetrachloroethene	0.010	mg/L	C	U	0.010	mg/L	C	U	0.010	mg/L	C	U
Toluene	0.010	mg/L	C	U	0.010	mg/L	C	U	0.010	mg/L	C	U
Trichloroethene	0.010	mg/L	C	U	0.010	mg/L	C	U	0.010	mg/L	C	U
Vinyl Acetate	0.010	mg/L	C	U	NA				NA			
Vinyl chloride	0.010	mg/L	C	U	0.010	mg/L	C	U	0.010	mg/L	C	U
Xylenes, Total	0.010	mg/L	C	U	0.010	mg/L	C	U	0.010	mg/L	C	U
cis-1,3-Dichloropropene	0.010	mg/L	C	U	0.010	mg/L	C	U	0.010	mg/L	C	U
trans-1,3-Dichloropropene	0.010	mg/L	C	U	0.010	mg/L	C	U	0.010	mg/L	C	U

TABLE D-14
(Continued)

PHASE II - CHEMICAL PARAMETERS

QC TYPE	TRIP BLANK				TRIP BLANK				TRIP BLANK			
SAMPLE NUMBER	114486				114489				114499			
ASSOCIATED SAMPLES	114485, 114487				114488, 114490				114498, 114500			
SAMPLING DATE	05/03/93				05/03/93				05/04/93			
CHEMICAL PARAMETERS	RESULTS	UNITS	L	VQ	RESULTS	UNITS	L	VQ	RESULTS	UNITS	L	VQ
Volatile Organics												
1,1,1-Trichloroethane	0.010	mg/L	C	U	0.010	mg/L	C	U	0.010	mg/L	C	U
1,1,2,2-Tetrachloroethane	0.010	mg/L	C	U	0.010	mg/L	C	U	0.010	mg/L	C	U
1,1,2-Trichloroethane	0.010	mg/L	C	U	0.010	mg/L	C	U	0.010	mg/L	C	U
1,1-Dichloroethane	0.010	mg/L	C	U	0.010	mg/L	C	U	0.010	mg/L	C	U
1,1-Dichloroethene	0.010	mg/L	C	U	0.010	mg/L	C	U	0.010	mg/L	C	U
1,2-Dichloroethane	0.010	mg/L	C	U	0.010	mg/L	C	U	0.010	mg/L	C	U
1,2-Dichloroethene	0.010	mg/L	C	U	0.010	mg/L	C	U	0.010	mg/L	C	U
1,2-Dichloropropane	0.010	mg/L	C	U	0.010	mg/L	C	U	0.010	mg/L	C	U
2-Butanone	0.010	mg/L	C	UJ	0.010	mg/L	C	UJ	0.010	mg/L	C	U
2-Hexanone	0.010	mg/L	C	U	0.010	mg/L	C	U	0.010	mg/L	C	U
4-Methyl-2-pentanone	0.010	mg/L	C	U	0.010	mg/L	C	U	0.010	mg/L	C	U
Acetone	0.010	mg/L	C	U	0.010	mg/L	C	U	0.010	mg/L	C	U
Benzene	0.010	mg/L	C	U	0.010	mg/L	C	U	0.010	mg/L	C	U
Bromodichloromethane	0.010	mg/L	C	U	0.010	mg/L	C	U	0.010	mg/L	C	U
Bromoform	0.010	mg/L	C	U	0.010	mg/L	C	U	0.010	mg/L	C	U
Bromomethane	0.010	mg/L	C	U	0.010	mg/L	C	U	0.010	mg/L	C	U
Carbon Tetrachloride	0.010	mg/L	C	U	0.010	mg/L	C	U	0.010	mg/L	C	U
Carbon disulfide	0.010	mg/L	C	U	0.010	mg/L	C	U	0.010	mg/L	C	UJ
Chlorobenzene	0.010	mg/L	C	U	0.010	mg/L	C	U	0.010	mg/L	C	U
Chloroethane	0.010	mg/L	C	U	0.010	mg/L	C	U	0.010	mg/L	C	UJ
Chloroform	0.010	mg/L	C	U	0.010	mg/L	C	U	0.010	mg/L	C	U
Chloromethane	0.010	mg/L	C	U	0.010	mg/L	C	U	0.010	mg/L	C	UJ
Dibromochloromethane	0.010	mg/L	C	U	0.010	mg/L	C	U	0.010	mg/L	C	U
Ethylbenzene	0.010	mg/L	C	U	0.010	mg/L	C	U	0.010	mg/L	C	U
Methylene chloride	0.004	mg/L	C	J	0.006	mg/L	C	J	0.010	mg/L	C	UJ
Styrene	0.010	mg/L	C	U	0.010	mg/L	C	U	0.010	mg/L	C	U
Tetrachloroethene	0.010	mg/L	C	U	0.010	mg/L	C	U	0.010	mg/L	C	U
Toluene	0.010	mg/L	C	U	0.010	mg/L	C	U	0.010	mg/L	C	U
Trichloroethene	0.010	mg/L	C	U	0.010	mg/L	C	U	0.010	mg/L	C	U
Vinyl Acetate	NA				NA				0.010	mg/L	C	U
Vinyl chloride	0.010	mg/L	C	U	0.010	mg/L	C	U	0.010	mg/L	C	U
Xylenes, Total	0.010	mg/L	C	U	0.010	mg/L	C	U	0.010	mg/L	C	U
cis-1,3-Dichloropropene	0.010	mg/L	C	U	0.010	mg/L	C	U	0.010	mg/L	C	U
trans-1,3-Dichloropropene	0.010	mg/L	C	U	0.010	mg/L	C	U	0.010	mg/L	C	U

TABLE D-14
(Continued)

PHASE II - CHEMICAL PARAMETERS

QC TYPE	TRIP BLANK				TRIP BLANK				TRIP BLANK			
SAMPLE NUMBER	114502				114509				114515			
ASSOCIATED SAMPLES	114501, 114503				114508, 114510				114514, 114516			
SAMPLING DATE	05/04/93				05/05/93				05/05/93			
CHEMICAL PARAMETERS	RESULTS	UNITS	L	VQ	RESULTS	UNITS	L	VQ	RESULTS	UNITS	L	VQ
Volatile Organics												
1,1,1-Trichloroethane	0.010	mg/L	C	U	0.010	mg/L	C	U	0.010	mg/L	C	U
1,1,2,2-Tetrachloroethane	0.010	mg/L	C	U	0.010	mg/L	C	U	0.010	mg/L	C	U
1,1,2-Trichloroethane	0.010	mg/L	C	U	0.010	mg/L	C	U	0.010	mg/L	C	U
1,1-Dichloroethane	0.010	mg/L	C	U	0.010	mg/L	C	U	0.010	mg/L	C	U
1,1-Dichloroethene	0.010	mg/L	C	U	0.010	mg/L	C	U	0.010	mg/L	C	U
1,2-Dichloroethane	0.010	mg/L	C	U	0.010	mg/L	C	U	0.010	mg/L	C	U
1,2-Dichloroethene	0.010	mg/L	C	U	0.010	mg/L	C	U	0.010	mg/L	C	U
1,2-Dichloropropane	0.010	mg/L	C	U	0.010	mg/L	C	U	0.010	mg/L	C	U
2-Butanone	0.010	mg/L	C	U	0.010	mg/L	C	U	0.010	mg/L	C	U
2-Hexanone	0.010	mg/L	C	U	0.010	mg/L	C	U	0.010	mg/L	C	U
4-Methyl-2-pentanone	0.010	mg/L	C	U	0.010	mg/L	C	U	0.010	mg/L	C	U
Acetone	0.010	mg/L	C	U	0.010	mg/L	C	U	0.010	mg/L	C	U
Benzene	0.010	mg/L	C	U	0.010	mg/L	C	U	0.010	mg/L	C	U
Bromodichloromethane	0.010	mg/L	C	U	0.010	mg/L	C	U	0.010	mg/L	C	U
Bromoform	0.010	mg/L	C	U	0.010	mg/L	C	U	0.010	mg/L	C	U
Bromomethane	0.010	mg/L	C	U	0.010	mg/L	C	U	0.010	mg/L	C	U
Carbon Tetrachloride	0.010	mg/L	C	U	0.010	mg/L	C	U	0.010	mg/L	C	U
Carbon disulfide	0.010	mg/L	C	UJ	0.010	mg/L	C	UJ	0.010	mg/L	C	UJ
Chlorobenzene	0.010	mg/L	C	U	0.010	mg/L	C	U	0.010	mg/L	C	U
Chloroethane	0.010	mg/L	C	UJ	0.010	mg/L	C	UJ	0.010	mg/L	C	UJ
Chloroform	0.010	mg/L	C	U	0.010	mg/L	C	U	0.010	mg/L	C	U
Chloromethane	0.010	mg/L	C	UJ	0.010	mg/L	C	UJ	0.010	mg/L	C	UJ
Dibromochloromethane	0.010	mg/L	C	U	0.010	mg/L	C	U	0.010	mg/L	C	U
Ethylbenzene	0.010	mg/L	C	U	0.010	mg/L	C	U	0.010	mg/L	C	U
Methylene chloride	0.010	mg/L	C	UJ	0.010	mg/L	C	UJ	0.010	mg/L	C	UJ
Styrene	0.010	mg/L	C	U	0.010	mg/L	C	U	0.010	mg/L	C	U
Tetrachloroethene	0.010	mg/L	C	U	0.010	mg/L	C	U	0.010	mg/L	C	U
Toluene	0.010	mg/L	C	U	0.010	mg/L	C	U	0.010	mg/L	C	U
Trichloroethene	0.010	mg/L	C	U	0.010	mg/L	C	U	0.010	mg/L	C	U
Vinyl Acetate	0.010	mg/L	C	U	0.010	mg/L	C	U	0.010	mg/L	C	U
Vinyl chloride	0.010	mg/L	C	U	0.010	mg/L	C	U	0.010	mg/L	C	U
Xylenes, Total	0.010	mg/L	C	U	0.010	mg/L	C	U	0.010	mg/L	C	U
cis-1,3-Dichloropropene	0.010	mg/L	C	U	0.010	mg/L	C	U	0.010	mg/L	C	U
trans-1,3-Dichloropropene	0.010	mg/L	C	U	0.010	mg/L	C	U	0.010	mg/L	C	U

TABLE D-14
(Continued)

PHASE II - CHEMICAL PARAMETERS

QC TYPE	TRIP BLANK				TRIP BLANK				TRIP BLANK			
SAMPLE NUMBER	114563				114571				114577			
ASSOCIATED SAMPLES	114564, 114567				114570, 114572				114576, 114578			
SAMPLING DATE	05/05/93				05/06/93				05/06/93			
CHEMICAL PARAMETERS	RESULTS	UNITS	L	VQ	RESULTS	UNITS	L	VQ	RESULTS	UNITS	L	VQ
Volatile Organics												
1,1,1-Trichloroethane	0.010	mg/L	C	U	0.010	mg/L	C	U	0.010	mg/L	C	U
1,1,2,2-Tetrachloroethane	0.010	mg/L	C	U	0.010	mg/L	C	U	0.010	mg/L	C	U
1,1,2-Trichloroethane	0.010	mg/L	C	U	0.010	mg/L	C	U	0.010	mg/L	C	U
1,1-Dichloroethane	0.010	mg/L	C	U	0.010	mg/L	C	U	0.010	mg/L	C	U
1,1-Dichloroethene	0.010	mg/L	C	U	0.010	mg/L	C	U	0.010	mg/L	C	U
1,2-Dichloroethane	0.010	mg/L	C	U	0.010	mg/L	C	U	0.010	mg/L	C	U
1,2-Dichloroethene	0.010	mg/L	C	U	0.010	mg/L	C	U	0.010	mg/L	C	U
1,2-Dichloropropane	0.010	mg/L	C	U	0.010	mg/L	C	U	0.010	mg/L	C	U
2-Butanone	0.010	mg/L	C	U	0.002	mg/L	C	J	0.010	mg/L	C	U
2-Hexanone	0.010	mg/L	C	U	0.010	mg/L	C	U	0.010	mg/L	C	U
4-Methyl-2-pentanone	0.010	mg/L	C	U	0.010	mg/L	C	U	0.010	mg/L	C	U
Acetone	0.010	mg/L	C	U	0.010	mg/L	C	U	0.010	mg/L	C	U
Benzene	0.010	mg/L	C	U	0.010	mg/L	C	U	0.010	mg/L	C	U
Bromodichloromethane	0.010	mg/L	C	U	0.010	mg/L	C	U	0.010	mg/L	C	U
Bromoform	0.010	mg/L	C	U	0.010	mg/L	C	U	0.010	mg/L	C	U
Bromomethane	0.010	mg/L	C	U	0.010	mg/L	C	U	0.010	mg/L	C	U
Carbon Tetrachloride	0.010	mg/L	C	U	0.010	mg/L	C	U	0.010	mg/L	C	U
Carbon disulfide	0.010	mg/L	C	UJ	0.010	mg/L	C	UJ	0.010	mg/L	C	UJ
Chlorobenzene	0.010	mg/L	C	U	0.010	mg/L	C	U	0.010	mg/L	C	U
Chloroethane	0.010	mg/L	C	UJ	0.010	mg/L	C	UJ	0.010	mg/L	C	UJ
Chloroform	0.010	mg/L	C	U	0.010	mg/L	C	U	0.010	mg/L	C	U
Chloromethane	0.010	mg/L	C	UJ	0.010	mg/L	C	UJ	0.010	mg/L	C	UJ
Dibromochloromethane	0.010	mg/L	C	U	0.010	mg/L	C	U	0.010	mg/L	C	U
Ethylbenzene	0.010	mg/L	C	U	0.010	mg/L	C	U	0.010	mg/L	C	U
Methylene chloride	0.010	mg/L	C	UJ	0.010	mg/L	C	UJ	0.013	mg/L	C	UJ
Styrene	0.010	mg/L	C	U	0.010	mg/L	C	U	0.010	mg/L	C	U
Tetrachloroethene	0.010	mg/L	C	U	0.010	mg/L	C	U	0.010	mg/L	C	U
Toluene	0.010	mg/L	C	U	0.010	mg/L	C	U	0.010	mg/L	C	U
Trichloroethene	0.010	mg/L	C	U	0.010	mg/L	C	U	0.010	mg/L	C	U
Vinyl Acetate	0.010	mg/L	C	U	0.010	mg/L	C	U	0.010	mg/L	C	U
Vinyl chloride	0.010	mg/L	C	U	0.010	mg/L	C	U	0.010	mg/L	C	UJ
Xylenes, Total	0.010	mg/L	C	U	0.010	mg/L	C	U	0.010	mg/L	C	U
cis-1,3-Dichloropropene	0.010	mg/L	C	U	0.010	mg/L	C	U	0.010	mg/L	C	U
trans-1,3-Dichloropropene	0.010	mg/L	C	U	0.010	mg/L	C	U	0.010	mg/L	C	U

TABLE D-14
(Continued)

PHASE II - CHEMICAL PARAMETERS

QC TYPE	TRIP BLANK				TRIP BLANK				TRIP BLANK			
SAMPLE NUMBER	114590				114594				114599			
ASSOCIATED SAMPLES	114589, 114591				114593, 114595				114598			
SAMPLING DATE	05/16/93				05/16/93				05/19/93			
CHEMICAL PARAMETERS	RESULTS	UNITS	L	VQ	RESULTS	UNITS	L	VQ	RESULTS	UNITS	L	VQ
Volatile Organics												
1,1,1-Trichloroethane	0.010	mg/L	C	U	0.010	mg/L	C	U	0.010	mg/L	C	U
1,1,2,2-Tetrachloroethane	0.010	mg/L	C	U	0.010	mg/L	C	U	0.010	mg/L	C	U
1,1,2-Trichloroethane	0.010	mg/L	C	U	0.010	mg/L	C	U	0.010	mg/L	C	U
1,1-Dichloroethane	0.010	mg/L	C	U	0.010	mg/L	C	U	0.010	mg/L	C	U
1,1-Dichloroethene	0.010	mg/L	C	U	0.010	mg/L	C	U	0.010	mg/L	C	U
1,2-Dichloroethane	0.010	mg/L	C	U	0.010	mg/L	C	U	0.010	mg/L	C	U
1,2-Dichloroethene	0.010	mg/L	C	U	0.010	mg/L	C	U	0.010	mg/L	C	U
1,2-Dichloropropane	0.010	mg/L	C	U	0.010	mg/L	C	U	0.010	mg/L	C	U
2-Butanone	0.010	mg/L	C	UJ	0.010	mg/L	C	UJ	0.010	mg/L	C	UJ
2-Hexanone	0.010	mg/L	C	UJ	0.010	mg/L	C	U	0.010	mg/L	C	UJ
4-Methyl-2-pentanone	0.010	mg/L	C	UJ	0.010	mg/L	C	UJ	0.010	mg/L	C	UJ
Acetone	0.010	mg/L	C	U	0.010	mg/L	C	UJ	0.001	mg/L	C	J
Benzene	0.010	mg/L	C	U	0.010	mg/L	C	U	0.010	mg/L	C	U
Bromodichloromethane	0.010	mg/L	C	U	0.010	mg/L	C	U	0.010	mg/L	C	U
Bromoform	0.010	mg/L	C	U	0.010	mg/L	C	U	0.010	mg/L	C	U
Bromomethane	0.010	mg/L	C	U	0.010	mg/L	C	U	0.010	mg/L	C	U
Carbon Tetrachloride	0.010	mg/L	C	U	0.010	mg/L	C	U	0.010	mg/L	C	U
Carbon disulfide	0.010	mg/L	C	U	0.010	mg/L	C	U	0.010	mg/L	C	U
Chlorobenzene	0.010	mg/L	C	U	0.010	mg/L	C	U	0.010	mg/L	C	U
Chloroethane	0.010	mg/L	C	U	0.010	mg/L	C	UJ	0.010	mg/L	C	U
Chloroform	0.010	mg/L	C	U	0.010	mg/L	C	U	0.010	mg/L	C	U
Chloromethane	0.010	mg/L	C	U	0.010	mg/L	C	U	0.010	mg/L	C	U
Dibromochloromethane	0.010	mg/L	C	U	0.010	mg/L	C	U	0.010	mg/L	C	U
Ethylbenzene	0.010	mg/L	C	U	0.010	mg/L	C	U	0.010	mg/L	C	U
Methylene chloride	0.010	mg/L	C	UJ	0.012	mg/L	C	UJ	0.010	mg/L	C	UJ
Styrene	0.010	mg/L	C	U	0.010	mg/L	C	U	0.010	mg/L	C	U
Tetrachloroethene	0.010	mg/L	C	U	0.010	mg/L	C	U	0.010	mg/L	C	U
Toluene	0.010	mg/L	C	U	0.010	mg/L	C	U	0.010	mg/L	C	U
Trichloroethene	0.010	mg/L	C	U	0.010	mg/L	C	U	0.010	mg/L	C	U
Vinyl Acetate	0.010	mg/L	C	UJ	0.010	mg/L	C	UJ	0.010	mg/L	C	UJ
Vinyl chloride	0.010	mg/L	C	U	0.010	mg/L	C	UJ	0.010	mg/L	C	U
Xylenes, Total	0.010	mg/L	C	U	0.010	mg/L	C	U	0.010	mg/L	C	U
cis-1,3-Dichloropropene	0.010	mg/L	C	U	0.010	mg/L	C	U	0.010	mg/L	C	U
trans-1,3-Dichloropropene	0.010	mg/L	C	U	0.010	mg/L	C	U	0.010	mg/L	C	U

TABLE D-14
(Continued)

PHASE II - CHEMICAL PARAMETERS

QC TYPE	TRIP BLANK				TRIP BLANK				TRIP BLANK			
SAMPLE NUMBER	114601				114606				114608			
ASSOCIATED SAMPLES	114579, 114600, 114602, 114580				114605				114607			
SAMPLING DATE	05/10/93				05/20/93				05/25/93			
CHEMICAL PARAMETERS	RESULTS	UNITS	L	VQ	RESULTS	UNITS	L	VQ	RESULTS	UNITS	L	VQ
Volatile Organics												
1,1,1-Trichloroethane	0.010	mg/L	C	U	0.010	mg/L	C	U	0.010	mg/L	C	U
1,1,2,2-Tetrachloroethane	0.010	mg/L	C	U	0.010	mg/L	C	U	0.010	mg/L	C	U
1,1,2-Trichloroethane	0.010	mg/L	C	U	0.010	mg/L	C	U	0.010	mg/L	C	U
1,1-Dichloroethane	0.010	mg/L	C	U	0.010	mg/L	C	U	0.010	mg/L	C	U
1,1-Dichloroethene	0.010	mg/L	C	U	0.010	mg/L	C	U	0.010	mg/L	C	U
1,2-Dichloroethane	0.010	mg/L	C	U	0.010	mg/L	C	U	0.010	mg/L	C	U
1,2-Dichloroethene	0.010	mg/L	C	U	0.010	mg/L	C	U	0.010	mg/L	C	U
1,2-Dichloropropane	0.010	mg/L	C	U	0.010	mg/L	C	U	0.010	mg/L	C	U
2-Butanone	0.010	mg/L	C	U	0.010	mg/L	C	U	0.010	mg/L	C	U
2-Hexanone	0.010	mg/L	C	U	0.010	mg/L	C	UJ	0.010	mg/L	C	U
4-Methyl-2-pentanone	0.010	mg/L	C	U	0.010	mg/L	C	UJ	0.010	mg/L	C	U
Acetone	0.011	mg/L	C	U	0.010	mg/L	C	U	0.010	mg/L	C	UJ
Benzene	0.010	mg/L	C	U	0.010	mg/L	C	U	0.010	mg/L	C	U
Bromodichloromethane	0.010	mg/L	C	U	0.010	mg/L	C	U	0.010	mg/L	C	U
Bromoform	0.010	mg/L	C	U	0.010	mg/L	C	U	0.010	mg/L	C	U
Bromomethane	0.010	mg/L	C	U	0.010	mg/L	C	U	0.010	mg/L	C	U
Carbon Tetrachloride	0.010	mg/L	C	U	0.010	mg/L	C	U	0.010	mg/L	C	U
Carbon disulfide	0.010	mg/L	C	UJ	0.010	mg/L	C	U	0.010	mg/L	C	U
Chlorobenzene	0.010	mg/L	C	U	0.010	mg/L	C	U	0.010	mg/L	C	U
Chloroethane	0.010	mg/L	C	UJ	0.010	mg/L	C	U	0.010	mg/L	C	UJ
Chloroform	0.010	mg/L	C	U	0.010	mg/L	C	U	0.010	mg/L	C	U
Chloromethane	0.010	mg/L	C	UJ	0.010	mg/L	C	U	0.010	mg/L	C	UJ
Dibromochloromethane	0.010	mg/L	C	U	0.010	mg/L	C	U	0.010	mg/L	C	U
Ethylbenzene	0.010	mg/L	C	U	0.010	mg/L	C	U	0.010	mg/L	C	U
Methylene chloride	0.011	mg/L	C	UJ	0.010	mg/L	C	UJ	0.010	mg/L	C	UJ
Styrene	0.010	mg/L	C	U	0.010	mg/L	C	U	0.010	mg/L	C	U
Tetrachloroethene	0.010	mg/L	C	U	0.010	mg/L	C	U	0.010	mg/L	C	UJ
Toluene	0.010	mg/L	C	U	0.010	mg/L	C	U	0.010	mg/L	C	U
Trichloroethene	0.010	mg/L	C	U	0.010	mg/L	C	U	0.010	mg/L	C	U
Vinyl Acetate	0.010	mg/L	C	U	0.010	mg/L	C	U	0.010	mg/L	C	U
Vinyl chloride	0.010	mg/L	C	UJ	0.010	mg/L	C	U	0.010	mg/L	C	U
Xylenes, Total	0.010	mg/L	C	U	0.010	mg/L	C	U	0.010	mg/L	C	U
cis-1,3-Dichloropropene	0.010	mg/L	C	U	0.010	mg/L	C	U	0.010	mg/L	C	U
trans-1,3-Dichloropropene	0.010	mg/L	C	U	0.010	mg/L	C	U	0.010	mg/L	C	U

000963

TABLE D-14
(Continued)

PHASE II - CHEMICAL PARAMETERS

QC TYPE	TRIP BLANK				TRIP BLANK				TRIP BLANK			
SAMPLE NUMBER	114610				114625				114700			
ASSOCIATED SAMPLES	114609				114620, 114622, 114623, 114624				114673			
SAMPLING DATE	05/26/93				05/13/93				05/15/93			
CHEMICAL PARAMETERS	RESULTS	UNITS	L	VQ	RESULTS	UNITS	L	VQ	RESULTS	UNITS	L	VQ
Volatile Organics												
1,1,1-Trichloroethane	0.010	mg/L	C	U	0.010	mg/L	C	U	0.010	mg/L	C	U
1,1,2,2-Tetrachloroethane	0.010	mg/L	C	U	0.010	mg/L	C	U	0.010	mg/L	C	U
1,1,2-Trichloroethane	0.010	mg/L	C	U	0.010	mg/L	C	U	0.010	mg/L	C	U
1,1-Dichloroethane	0.010	mg/L	C	U	0.010	mg/L	C	U	0.010	mg/L	C	U
1,1-Dichloroethene	0.010	mg/L	C	U	0.010	mg/L	C	U	0.010	mg/L	C	U
1,2-Dichloroethane	0.010	mg/L	C	U	0.010	mg/L	C	U	0.010	mg/L	C	U
1,2-Dichloroethene	0.010	mg/L	C	U	0.010	mg/L	C	U	0.010	mg/L	C	U
1,2-Dichloropropane	0.010	mg/L	C	U	0.010	mg/L	C	U	0.010	mg/L	C	U
2-Butanone	0.010	mg/L	C	U	0.010	mg/L	C	UJ	0.010	mg/L	C	UJ
2-Hexanone	0.010	mg/L	C	U	0.010	mg/L	C	UJ	0.010	mg/L	C	U
4-Methyl-2-pentanone	0.010	mg/L	C	U	0.010	mg/L	C	U	0.010	mg/L	C	UJ
Acetone	0.015	mg/L	C	-	0.009	mg/L	C	R	0.010	mg/L	C	UJ
Benzene	0.010	mg/L	C	U	0.010	mg/L	C	U	0.010	mg/L	C	U
Bromodichloromethane	0.010	mg/L	C	U	0.010	mg/L	C	U	0.010	mg/L	C	U
Bromoform	0.010	mg/L	C	U	0.010	mg/L	C	U	0.010	mg/L	C	U
Bromomethane	0.010	mg/L	C	U	0.010	mg/L	C	U	0.010	mg/L	C	U
Carbon Tetrachloride	0.010	mg/L	C	U	0.010	mg/L	C	U	0.010	mg/L	C	U
Carbon disulfide	0.010	mg/L	C	U	0.010	mg/L	C	U	0.010	mg/L	C	U
Chlorobenzene	0.010	mg/L	C	U	0.010	mg/L	C	U	0.010	mg/L	C	U
Chloroethane	0.010	mg/L	C	UJ	0.010	mg/L	C	U	0.010	mg/L	C	UJ
Chloroform	0.010	mg/L	C	U	0.010	mg/L	C	U	0.010	mg/L	C	U
Chloromethane	0.010	mg/L	C	UJ	0.010	mg/L	C	U	0.010	mg/L	C	U
Dibromochloromethane	0.010	mg/L	C	U	0.010	mg/L	C	U	0.010	mg/L	C	U
Ethylbenzene	0.010	mg/L	C	U	0.010	mg/L	C	U	0.010	mg/L	C	U
Methylene chloride	0.010	mg/L	C	UJ	0.010	mg/L	C	U	0.011	mg/L	C	UJ
Styrene	0.010	mg/L	C	U	0.010	mg/L	C	U	0.010	mg/L	C	U
Tetrachloroethene	0.010	mg/L	C	UJ	0.010	mg/L	C	U	0.010	mg/L	C	U
Toluene	0.010	mg/L	C	U	0.010	mg/L	C	U	0.010	mg/L	C	U
Trichloroethene	0.010	mg/L	C	U	0.010	mg/L	C	U	0.010	mg/L	C	U
Vinyl Acetate	0.010	mg/L	C	U	NA				0.010	mg/L	C	UJ
Vinyl chloride	0.010	mg/L	C	U	0.010	mg/L	C	U	0.010	mg/L	C	UJ
Xylenes, Total	0.010	mg/L	C	U	0.010	mg/L	C	U	0.010	mg/L	C	U
cis-1,3-Dichloropropene	0.010	mg/L	C	U	0.010	mg/L	C	U	0.010	mg/L	C	U
trans-1,3-Dichloropropene	0.010	mg/L	C	U	0.010	mg/L	C	U	0.010	mg/L	C	U

TABLE D-14
(Continued)

PHASE II - CHEMICAL PARAMETERS

QC TYPE	TRIP BLANK				TRIP BLANK				TRIP BLANK			
SAMPLE NUMBER	114735				114738				114744			
ASSOCIATED SAMPLES	114733, 114734				114737				114742, 114743, 114745 114746, 114747			
SAMPLING DATE	05/27/93				05/28/93				06/01/93			
CHEMICAL PARAMETERS	RESULTS	UNITS	L	VQ	RESULTS	UNITS	L	VQ	RESULTS	UNITS	L	VQ
Volatile Organics												
1,1,1-Trichloroethane	0.010	mg/L	C	U	0.010	mg/L	C	U	0.010	mg/L	C	U
1,1,2,2-Tetrachloroethane	0.010	mg/L	C	U	0.010	mg/L	C	U	0.010	mg/L	C	U
1,1,2-Trichloroethane	0.010	mg/L	C	U	0.010	mg/L	C	U	0.010	mg/L	C	U
1,1-Dichloroethane	0.010	mg/L	C	U	0.010	mg/L	C	U	0.010	mg/L	C	U
1,1-Dichloroethene	0.010	mg/L	C	U	0.010	mg/L	C	U	0.010	mg/L	C	U
1,2-Dichloroethane	0.010	mg/L	C	U	0.010	mg/L	C	U	0.010	mg/L	C	U
1,2-Dichloroethene	0.010	mg/L	C	U	0.010	mg/L	C	U	0.010	mg/L	C	U
1,2-Dichloropropane	0.010	mg/L	C	U	0.010	mg/L	C	U	0.010	mg/L	C	U
2-Butanone	0.010	mg/L	C	U	0.010	mg/L	C	U	0.010	mg/L	C	U
2-Hexanone	0.010	mg/L	C	U	0.010	mg/L	C	U	0.010	mg/L	C	U
4-Methyl-2-pentanone	0.010	mg/L	C	U	0.010	mg/L	C	U	0.010	mg/L	C	U
Acetone	0.003	mg/L	C	J	0.010	mg/L	C	UJ	0.010	mg/L	C	U
Benzene	0.010	mg/L	C	U	0.010	mg/L	C	U	0.010	mg/L	C	U
Bromodichloromethane	0.010	mg/L	C	U	0.010	mg/L	C	U	0.010	mg/L	C	U
Bromoform	0.010	mg/L	C	U	0.010	mg/L	C	U	0.010	mg/L	C	U
Bromomethane	0.010	mg/L	C	U	0.010	mg/L	C	U	0.010	mg/L	C	U
Carbon Tetrachloride	0.010	mg/L	C	U	0.010	mg/L	C	U	0.010	mg/L	C	U
Carbon disulfide	0.010	mg/L	C	U	0.010	mg/L	C	U	0.010	mg/L	C	U
Chlorobenzene	0.010	mg/L	C	U	0.010	mg/L	C	U	0.010	mg/L	C	U
Chloroethane	0.010	mg/L	C	UJ	0.010	mg/L	C	UJ	0.010	mg/L	C	U
Chloroform	0.010	mg/L	C	U	0.010	mg/L	C	U	0.010	mg/L	C	U
Chloromethane	0.010	mg/L	C	UJ	0.010	mg/L	C	UJ	0.010	mg/L	C	U
Dibromochloromethane	0.010	mg/L	C	U	0.010	mg/L	C	U	0.010	mg/L	C	U
Ethylbenzene	0.010	mg/L	C	U	0.010	mg/L	C	U	0.010	mg/L	C	U
Methylene chloride	0.010	mg/L	C	UJ	0.010	mg/L	C	UJ	0.010	mg/L	C	U
Styrene	0.010	mg/L	C	U	0.010	mg/L	C	U	0.010	mg/L	C	U
Tetrachloroethene	0.010	mg/L	C	UJ	0.010	mg/L	C	UJ	0.010	mg/L	C	U
Toluene	0.010	mg/L	C	U	0.010	mg/L	C	U	0.010	mg/L	C	U
Trichloroethene	0.010	mg/L	C	U	0.010	mg/L	C	U	0.010	mg/L	C	U
Vinyl Acetate	0.010	mg/L	C	U	0.010	mg/L	C	U	0.010	mg/L	C	U
Vinyl chloride	0.010	mg/L	C	U	0.010	mg/L	C	U	0.010	mg/L	C	U
Xylenes, Total	0.010	mg/L	C	U	0.010	mg/L	C	U	0.010	mg/L	C	U
cis-1,3-Dichloropropene	0.010	mg/L	C	U	0.010	mg/L	C	U	0.010	mg/L	C	U
trans-1,3-Dichloropropene	0.010	mg/L	C	U	0.010	mg/L	C	U	0.010	mg/L	C	U

000965

TABLE D-14
(Continued)

PHASE II - CHEMICAL PARAMETERS

QC TYPE	TRIP BLANK				TRIP BLANK				TRIP BLANK			
SAMPLE NUMBER	114768				114783				114787			
ASSOCIATED SAMPLES	114767				114626, 114766				114784, 114785			
SAMPLING DATE	05/25/93				06/01/93				06/11/93			
CHEMICAL PARAMETERS	RESULTS	UNITS	L	VQ	RESULTS	UNITS	L	VQ	RESULTS	UNITS	L	VQ
Volatile Organics												
1,1,1-Trichloroethane	0.010	mg/L	C	U	0.010	mg/L	C	U	0.010	mg/L	C	U
1,1,2,2-Tetrachloroethane	0.010	mg/L	C	U	0.010	mg/L	C	U	0.010	mg/L	C	U
1,1,2-Trichloroethane	0.010	mg/L	C	U	0.010	mg/L	C	U	0.010	mg/L	C	U
1,1-Dichloroethane	0.010	mg/L	C	U	0.010	mg/L	C	U	0.010	mg/L	C	U
1,1-Dichloroethene	0.010	mg/L	C	U	0.010	mg/L	C	U	0.010	mg/L	C	U
1,2-Dichloroethane	0.010	mg/L	C	U	0.010	mg/L	C	U	0.010	mg/L	C	U
1,2-Dichloroethene	0.010	mg/L	C	U	0.010	mg/L	C	U	0.010	mg/L	C	U
1,2-Dichloropropane	0.010	mg/L	C	U	0.010	mg/L	C	U	0.010	mg/L	C	U
2-Butanone	0.010	mg/L	C	U	0.002	mg/L	C	J	0.010	mg/L	C	UJ
2-Hexanone	0.010	mg/L	C	U	0.010	mg/L	C	U	0.010	mg/L	C	UJ
4-Methyl-2-pentanone	0.010	mg/L	C	U	0.010	mg/L	C	U	0.010	mg/L	C	R
Acetone	0.010	mg/L	C	UJ	0.010	mg/L	C	U	0.010	mg/L	C	UJ
Benzene	0.010	mg/L	C	U	0.010	mg/L	C	U	0.010	mg/L	C	U
Bromodichloromethane	0.010	mg/L	C	U	0.010	mg/L	C	U	0.010	mg/L	C	U
Bromoform	0.010	mg/L	C	U	0.010	mg/L	C	U	0.010	mg/L	C	U
Bromomethane	0.010	mg/L	C	U	0.010	mg/L	C	U	0.010	mg/L	C	U
Carbon Tetrachloride	0.010	mg/L	C	U	0.010	mg/L	C	U	0.010	mg/L	C	U
Carbon disulfide	0.010	mg/L	C	U	0.010	mg/L	C	U	0.010	mg/L	C	U
Chlorobenzene	0.010	mg/L	C	U	0.010	mg/L	C	U	0.010	mg/L	C	U
Chloroethane	0.010	mg/L	C	UJ	0.010	mg/L	C	U	0.010	mg/L	C	U
Chloroform	0.010	mg/L	C	U	0.010	mg/L	C	U	0.010	mg/L	C	U
Chloromethane	0.010	mg/L	C	UJ	0.010	mg/L	C	U	0.010	mg/L	C	U
Dibromochloromethane	0.010	mg/L	C	U	0.010	mg/L	C	U	0.010	mg/L	C	U
Ethylbenzene	0.010	mg/L	C	U	0.010	mg/L	C	U	0.010	mg/L	C	U
Methylene chloride	0.010	mg/L	C	UJ	0.010	mg/L	C	U	0.010	mg/L	C	U
Styrene	0.010	mg/L	C	U	0.010	mg/L	C	U	0.010	mg/L	C	U
Tetrachloroethene	0.010	mg/L	C	UJ	0.010	mg/L	C	U	0.010	mg/L	C	U
Toluene	0.010	mg/L	C	U	0.010	mg/L	C	U	0.010	mg/L	C	U
Trichloroethene	0.010	mg/L	C	U	0.010	mg/L	C	U	0.010	mg/L	C	U
Vinyl Acetate	0.010	mg/L	C	U	0.010	mg/L	C	U	NA			
Vinyl chloride	0.010	mg/L	C	U	0.010	mg/L	C	U	0.010	mg/L	C	U
Xylenes, Total	0.010	mg/L	C	U	0.010	mg/L	C	U	0.010	mg/L	C	U
cis-1,3-Dichloropropene	0.010	mg/L	C	U	0.010	mg/L	C	U	0.010	mg/L	C	U
trans-1,3-Dichloropropene	0.010	mg/L	C	U	0.010	mg/L	C	U	0.010	mg/L	C	U

6508

009956

TABLE D-14
(Continued)

PHASE II - CHEMICAL PARAMETERS

QC TYPE	TRIP BLANK				TRIP BLANK				TRIP BLANK			
SAMPLE NUMBER	114792				114817				114825			
ASSOCIATED SAMPLES	114762, 114763, 114764 114765, 114766				114812, 114813, 114814 114215, 114216				114821, 114822, 114823, 114824			
SAMPLING DATE	06/03/93				06/05/93				06/06/93			
CHEMICAL PARAMETERS	RESULTS	UNITS	L	VQ	RESULTS	UNITS	L	VQ	RESULTS	UNITS	L	VQ
Volatile Organics												
1,1,1-Trichloroethane	0.010	mg/L	C	U	0.010	mg/L	C	U	0.010	mg/L	C	U
1,1,2,2-Tetrachloroethane	0.010	mg/L	C	U	0.010	mg/L	C	U	0.010	mg/L	C	U
1,1,2-Trichloroethane	0.010	mg/L	C	U	0.010	mg/L	C	U	0.010	mg/L	C	U
1,1-Dichloroethane	0.010	mg/L	C	U	0.010	mg/L	C	U	0.010	mg/L	C	U
1,1-Dichloroethene	0.010	mg/L	C	U	0.010	mg/L	C	U	0.010	mg/L	C	U
1,2-Dichloroethane	0.010	mg/L	C	U	0.010	mg/L	C	U	0.010	mg/L	C	U
1,2-Dichloroethene	0.010	mg/L	C	U	0.010	mg/L	C	U	0.010	mg/L	C	U
1,2-Dichloropropane	0.010	mg/L	C	U	0.010	mg/L	C	U	0.010	mg/L	C	U
2-Butanone	0.010	mg/L	C	U	0.010	mg/L	C	U	0.010	mg/L	C	U
2-Hexanone	0.010	mg/L	C	U	0.010	mg/L	C	U	0.010	mg/L	C	U
4-Methyl-2-pentanone	0.010	mg/L	C	U	0.010	mg/L	C	U	0.010	mg/L	C	U
Acetone	0.010	mg/L	C	U	0.010	mg/L	C	U	0.010	mg/L	C	U
Benzene	0.010	mg/L	C	U	0.010	mg/L	C	U	0.010	mg/L	C	U
Bromodichloromethane	0.010	mg/L	C	U	0.010	mg/L	C	U	0.010	mg/L	C	U
Bromoform	0.010	mg/L	C	U	0.010	mg/L	C	UJ	0.010	mg/L	C	UJ
Bromomethane	0.010	mg/L	C	U	0.010	mg/L	C	U	0.010	mg/L	C	U
Carbon Tetrachloride	0.010	mg/L	C	U	0.010	mg/L	C	U	0.010	mg/L	C	U
Carbon disulfide	0.010	mg/L	C	U	0.010	mg/L	C	U	0.010	mg/L	C	U
Chlorobenzene	0.010	mg/L	C	U	0.010	mg/L	C	U	0.010	mg/L	C	U
Chloroethane	0.010	mg/L	C	U	0.010	mg/L	C	U	0.010	mg/L	C	U
Chloroform	0.010	mg/L	C	U	0.010	mg/L	C	U	0.010	mg/L	C	U
Chloromethane	0.010	mg/L	C	U	0.010	mg/L	C	U	0.010	mg/L	C	U
Dibromochloromethane	0.010	mg/L	C	U	0.010	mg/L	C	U	0.010	mg/L	C	U
Ethylbenzene	0.010	mg/L	C	U	0.010	mg/L	C	U	0.010	mg/L	C	U
Methylene chloride	0.010	mg/L	C	U	0.010	mg/L	C	U	0.010	mg/L	C	U
Styrene	0.010	mg/L	C	U	0.010	mg/L	C	U	0.010	mg/L	C	U
Tetrachloroethene	0.010	mg/L	C	U	0.010	mg/L	C	U	0.010	mg/L	C	U
Toluene	0.010	mg/L	C	U	0.010	mg/L	C	U	0.010	mg/L	C	U
Trichloroethene	0.010	mg/L	C	U	0.010	mg/L	C	U	0.010	mg/L	C	U
Vinyl Acetate	0.010	mg/L	C	U	0.010	mg/L	C	U	0.010	mg/L	C	U
Vinyl chloride	0.010	mg/L	C	U	0.010	mg/L	C	U	0.010	mg/L	C	U
Xylenes, Total	0.010	mg/L	C	U	0.010	mg/L	C	U	0.010	mg/L	C	U
cis-1,3-Dichloropropene	0.010	mg/L	C	U	0.010	mg/L	C	U	0.010	mg/L	C	U
trans-1,3-Dichloropropene	0.010	mg/L	C	U	0.010	mg/L	C	U	0.010	mg/L	C	U

000967

TABLE D-14
(Continued)

PHASE II - CHEMICAL PARAMETERS

QC TYPE	TRIP BLANK				TRIP BLANK				TRIP BLANK			
SAMPLE NUMBER	114853				114860				114871			
ASSOCIATED SAMPLES	114836, 114837, 114838				114857, 114858, 114859, 114863				114870			
SAMPLING DATE	06/07/93				06/08/93				06/10/93			
CHEMICAL PARAMETERS	RESULTS	UNITS	L	VQ	RESULTS	UNITS	L	VQ	RESULTS	UNITS	L	VQ
Volatile Organics												
1,1,1-Trichloroethane	0.010	mg/L	C	U	0.010	mg/L	C	U	0.010	mg/L	C	U
1,1,2,2-Tetrachloroethane	0.010	mg/L	C	U	0.010	mg/L	C	U	0.010	mg/L	C	U
1,1,2-Trichloroethane	0.010	mg/L	C	U	0.010	mg/L	C	U	0.010	mg/L	C	U
1,1-Dichloroethane	0.010	mg/L	C	U	0.010	mg/L	C	U	0.010	mg/L	C	U
1,1-Dichloroethene	0.010	mg/L	C	U	0.010	mg/L	C	U	0.010	mg/L	C	U
1,2-Dichloroethane	0.010	mg/L	C	U	0.010	mg/L	C	U	0.010	mg/L	C	U
1,2-Dichloroethene	0.010	mg/L	C	U	0.010	mg/L	C	U	0.010	mg/L	C	U
1,2-Dichloropropane	0.010	mg/L	C	U	0.010	mg/L	C	U	0.010	mg/L	C	U
2-Butanone	0.010	mg/L	C	U	0.010	mg/L	C	U	0.010	mg/L	C	U
2-Hexanone	0.010	mg/L	C	UJ	0.010	mg/L	C	UJ	0.010	mg/L	C	U
4-Methyl-2-pentanone	0.010	mg/L	C	U	0.010	mg/L	C	U	0.010	mg/L	C	U
Acetone	0.010	mg/L	C	UJ	0.010	mg/L	C	UJ	0.010	mg/L	C	U
Benzene	0.010	mg/L	C	U	0.010	mg/L	C	U	0.010	mg/L	C	U
Bromodichloromethane	0.010	mg/L	C	U	0.010	mg/L	C	U	0.010	mg/L	C	U
Bromoform	0.010	mg/L	C	U	0.010	mg/L	C	U	0.010	mg/L	C	U
Bromomethane	0.010	mg/L	C	UJ	0.010	mg/L	C	UJ	0.010	mg/L	C	UJ
Carbon Tetrachloride	0.010	mg/L	C	U	0.010	mg/L	C	U	0.010	mg/L	C	U
Carbon disulfide	0.010	mg/L	C	U	0.010	mg/L	C	U	0.010	mg/L	C	U
Chlorobenzene	0.010	mg/L	C	U	0.010	mg/L	C	U	0.010	mg/L	C	U
Chloroethane	0.010	mg/L	C	UJ	0.010	mg/L	C	UJ	0.010	mg/L	C	U
Chloroform	0.010	mg/L	C	U	0.010	mg/L	C	U	0.010	mg/L	C	U
Chloromethane	0.010	mg/L	C	UJ	0.010	mg/L	C	UJ	0.010	mg/L	C	U
Dibromochloromethane	0.010	mg/L	C	U	0.010	mg/L	C	U	0.010	mg/L	C	U
Ethylbenzene	0.010	mg/L	C	U	0.010	mg/L	C	U	0.010	mg/L	C	U
Methylene chloride	0.010	mg/L	C	U	0.010	mg/L	C	U	0.010	mg/L	C	U
Styrene	0.010	mg/L	C	U	0.010	mg/L	C	U	0.010	mg/L	C	U
Tetrachloroethene	0.010	mg/L	C	U	0.010	mg/L	C	U	0.010	mg/L	C	U
Toluene	0.010	mg/L	C	U	0.010	mg/L	C	U	0.010	mg/L	C	U
Trichloroethene	0.010	mg/L	C	U	0.010	mg/L	C	U	0.010	mg/L	C	U
Vinyl Acetate	0.010	mg/L	C	U	0.010	mg/L	C	U	0.010	mg/L	C	UJ
Vinyl chloride	0.010	mg/L	C	U	0.010	mg/L	C	U	0.010	mg/L	C	U
Xylenes, Total	0.010	mg/L	C	U	0.010	mg/L	C	U	0.010	mg/L	C	U
cis-1,3-Dichloropropene	0.010	mg/L	C	U	0.010	mg/L	C	U	0.010	mg/L	C	U
trans-1,3-Dichloropropene	0.010	mg/L	C	U	0.010	mg/L	C	U	0.010	mg/L	C	U

TABLE D-14
(Continued)

PHASE II - CHEMICAL PARAMETERS

QC TYPE	TRIP BLANK				TRIP BLANK				TRIP BLANK			
SAMPLE NUMBER	114873				114880				114922			
ASSOCIATED SAMPLES	114872				114879, 114881				114921			
SAMPLING DATE	06/10/93				06/14/93				06/13/93			
CHEMICAL PARAMETERS	RESULTS	UNITS	L	VQ	RESULTS	UNITS	L	VQ	RESULTS	UNITS	L	VQ
Volatile Organics												
1,1,1-Trichloroethane	0.010	mg/L	C	U	0.010	mg/L	C	U	0.010	mg/L	C	U
1,1,2,2-Tetrachloroethane	0.010	mg/L	C	U	0.010	mg/L	C	U	0.010	mg/L	C	U
1,1,2-Trichloroethane	0.010	mg/L	C	U	0.010	mg/L	C	U	0.010	mg/L	C	U
1,1,2Trichlorotrifluoroethane	0.005	mg/L	C	NV	NA				NA			
1,1-Dichloroethane	0.010	mg/L	C	U	0.010	mg/L	C	U	0.010	mg/L	C	U
1,1-Dichloroethene	0.010	mg/L	C	U	0.010	mg/L	C	U	0.010	mg/L	C	U
1,2-Dichloroethane	0.010	mg/L	C	U	0.010	mg/L	C	U	0.010	mg/L	C	U
1,2-Dichloroethene	0.010	mg/L	C	U	0.010	mg/L	C	U	0.010	mg/L	C	U
1,2-Dichloropropane	0.010	mg/L	C	U	0.010	mg/L	C	U	0.010	mg/L	C	U
1,2-diethylbenzene	0.005	mg/L	C	NV	NA				NA			
2-Butanone	0.010	mg/L	C	U	0.010	mg/L	C	UJ	0.010	mg/L	C	UJ
2-Hexanone	0.010	mg/L	C	U	0.010	mg/L	C	UJ	0.010	mg/L	C	UJ
4-Methyl-2-pentanone	0.010	mg/L	C	U	0.010	mg/L	C	UJ	0.010	mg/L	C	R
Acetone	0.002	mg/L	C	J	0.010	mg/L	C	UJ	0.010	mg/L	C	UJ
Acetonitrile	0.100	mg/L	C	NV	NA				NA			
Acrylonitrile	0.100	mg/L	C	NV	NA				NA			
Benzene	0.010	mg/L	C	U	0.010	mg/L	C	U	0.010	mg/L	C	U
Bromodichloromethane	0.010	mg/L	C	U	0.010	mg/L	C	U	0.010	mg/L	C	U
Bromoform	0.010	mg/L	C	U	0.010	mg/L	C	U	0.010	mg/L	C	U
Bromomethane	0.010	mg/L	C	UJ	0.010	mg/L	C	U	0.010	mg/L	C	U
Carbon Tetrachloride	0.010	mg/L	C	U	0.010	mg/L	C	U	0.010	mg/L	C	U
Carbon disulfide	0.010	mg/L	C	U	0.010	mg/L	C	U	0.010	mg/L	C	U
Chlorobenzene	0.010	mg/L	C	U	0.010	mg/L	C	U	0.010	mg/L	C	U
Chloroethane	0.010	mg/L	C	U	0.010	mg/L	C	U	0.010	mg/L	C	U
Chloroform	0.010	mg/L	C	U	0.010	mg/L	C	U	0.010	mg/L	C	U
Chloromethane	0.010	mg/L	C	U	0.010	mg/L	C	U	0.010	mg/L	C	U
Dibromochloromethane	0.010	mg/L	C	U	0.010	mg/L	C	U	0.010	mg/L	C	U
Ethylbenzene	0.010	mg/L	C	U	0.010	mg/L	C	U	0.010	mg/L	C	U
Hexane	0.010	mg/L	C	NV	NA				NA			
Iodomethane	0.010	mg/L	C	NV	NA				NA			
Methylene chloride	0.010	mg/L	C	U	0.010	mg/L	C	U	0.010	mg/L	C	U
Styrene	0.010	mg/L	C	U	0.010	mg/L	C	U	0.010	mg/L	C	U
Tetrachloroethene	0.010	mg/L	C	U	0.010	mg/L	C	U	0.010	mg/L	C	U
Toluene	0.010	mg/L	C	U	0.010	mg/L	C	U	0.010	mg/L	C	U
Trichloroethene	0.010	mg/L	C	U	0.010	mg/L	C	U	0.010	mg/L	C	U
Vinyl Acetate	0.010	mg/L	C	UJ	0.010	mg/L	C	UJ	NA			
Vinyl chloride	0.010	mg/L	C	U	0.010	mg/L	C	U	0.010	mg/L	C	U
Xylenes, Total	0.010	mg/L	C	U	0.010	mg/L	C	U	0.010	mg/L	C	U
cis-1,3-Dichloropropene	0.010	mg/L	C	U	0.010	mg/L	C	U	0.010	mg/L	C	U
trans-1,3-Dichloropropene	0.010	mg/L	C	U	0.010	mg/L	C	U	0.010	mg/L	C	U

000369

TABLE D-14
(Continued)

PHASE II - CHEMICAL PARAMETERS

QC TYPE	TRIP BLANK				TRIP BLANK				TRIP BLANK			
SAMPLE NUMBER	114925				116224				114790			
ASSOCIATED SAMPLES	114924				116220, 116221				114788, 114789			
SAMPLING DATE	06/13/93				05/05/93				06/12/93			
									DUPLICATE			
CHEMICAL PARAMETERS	RESULTS	UNITS	L	VQ	RESULTS	UNITS	L	VQ	RESULTS	UNITS	L	VQ
Volatile Organics												
1,1,1-Trichloroethane	0.010	mg/L	C	U	0.010	mg/L	C	U	0.010	mg/L	C	U
1,1,2,2-Tetrachloroethane	0.010	mg/L	C	U	0.010	mg/L	C	U	0.010	mg/L	C	U
1,1,2-Trichloroethane	0.010	mg/L	C	U	0.010	mg/L	C	U	0.010	mg/L	C	U
1,1-Dichloroethane	0.010	mg/L	C	U	0.010	mg/L	C	UJ	0.010	mg/L	C	U
1,1-Dichloroethene	0.010	mg/L	C	U	0.010	mg/L	C	U	0.010	mg/L	C	U
1,2-Dichloroethane	0.010	mg/L	C	U	0.010	mg/L	C	U	0.010	mg/L	C	U
1,2-Dichloroethene	0.010	mg/L	C	U	0.010	mg/L	C	U	0.010	mg/L	C	U
1,2-Dichloropropane	0.010	mg/L	C	U	0.010	mg/L	C	U	0.010	mg/L	C	U
2-Butanone	0.010	mg/L	C	UJ	0.010	mg/L	C	UJ	0.010	mg/L	C	UJ
2-Hexanone	0.010	mg/L	C	UJ	0.010	mg/L	C	U	0.010	mg/L	C	UJ
4-Methyl-2-pentanone	0.010	mg/L	C	R	0.010	mg/L	C	U	0.010	mg/L	C	R
Acetone	0.010	mg/L	C	UJ	0.005	mg/L	C	R	0.010	mg/L	C	UJ
Benzene	0.010	mg/L	C	U	0.010	mg/L	C	U	0.010	mg/L	C	U
Bromodichloromethane	0.010	mg/L	C	U	0.010	mg/L	C	U	0.010	mg/L	C	U
Bromoform	0.010	mg/L	C	U	0.010	mg/L	C	U	0.010	mg/L	C	U
Bromomethane	0.010	mg/L	C	U	0.010	mg/L	C	U	0.010	mg/L	C	U
Carbon Tetrachloride	0.010	mg/L	C	U	0.010	mg/L	C	U	0.010	mg/L	C	U
Carbon disulfide	0.010	mg/L	C	U	0.010	mg/L	C	UJ	0.010	mg/L	C	U
Chlorobenzene	0.010	mg/L	C	U	0.010	mg/L	C	U	0.010	mg/L	C	U
Chloroethane	0.010	mg/L	C	U	0.010	mg/L	C	UJ	0.010	mg/L	C	U
Chloroform	0.010	mg/L	C	U	0.010	mg/L	C	U	0.010	mg/L	C	U
Chloromethane	0.010	mg/L	C	U	0.010	mg/L	C	R	0.010	mg/L	C	U
Dibromochloromethane	0.010	mg/L	C	U	0.010	mg/L	C	U	0.010	mg/L	C	U
Ethylbenzene	0.010	mg/L	C	U	0.010	mg/L	C	U	0.010	mg/L	C	U
Methylene chloride	0.010	mg/L	C	U	0.010	mg/L	C	UJ	0.010	mg/L	C	U
Styrene	0.010	mg/L	C	U	0.010	mg/L	C	U	0.010	mg/L	C	U
Tetrachloroethene	0.010	mg/L	C	U	0.010	mg/L	C	U	0.010	mg/L	C	U
Toluene	0.010	mg/L	C	U	0.010	mg/L	C	U	0.010	mg/L	C	U
Trichloroethene	0.010	mg/L	C	U	0.010	mg/L	C	U	0.010	mg/L	C	U
Vinyl Acetate	NA				0.010	mg/L	C	UJ	NA			
Vinyl chloride	0.010	mg/L	C	U	0.010	mg/L	C	UJ	0.010	mg/L	C	U
Xylenes, Total	0.010	mg/L	C	U	0.010	mg/L	C	U	0.010	mg/L	C	U
cis-1,3-Dichloropropene	0.010	mg/L	C	U	0.010	mg/L	C	U	0.010	mg/L	C	U
trans-1,3-Dichloropropene	0.010	mg/L	C	U	0.010	mg/L	C	U	0.010	mg/L	C	U

009920

6508

TABLE D-14
(Continued)

PHASE II - CHEMICAL PARAMETERS

QC TYPE	TRIP BLANK
SAMPLE NUMBER	114919
ASSOCIATED SAMPLES	114917, 114918
SAMPLING DATE	06/12/93
	DUPLICATE

CHEMICAL PARAMETERS	RESULTS	UNITS	L	VQ
Volatile Organics				
1,1,1-Trichloroethane	0.010	mg/L	C	U
1,1,2,2-Tetrachloroethane	0.010	mg/L	C	U
1,1,2-Trichloroethane	0.010	mg/L	C	U
1,1-Dichloroethane	0.010	mg/L	C	U
1,1-Dichloroethene	0.010	mg/L	C	U
1,2-Dichloroethane	0.010	mg/L	C	U
1,2-Dichloroethene	0.010	mg/L	C	U
1,2-Dichloropropane	0.010	mg/L	C	U
2-Butanone	0.010	mg/L	C	U
2-Hexanone	0.010	mg/L	C	U
4-Methyl-2-pentanone	0.010	mg/L	C	U
Acetone	0.010	mg/L	C	U
Benzene	0.010	mg/L	C	U
Bromodichloromethane	0.010	mg/L	C	U
Bromoform	0.010	mg/L	C	U
Bromomethane.	0.010	mg/L	C	UJ
Carbon Tetrachloride	0.010	mg/L	C	U
Carbon disulfide	0.010	mg/L	C	U
Chlorobenzene	0.010	mg/L	C	U
Chloroethane	0.010	mg/L	C	U
Chloroform	0.010	mg/L	C	U
Chloromethane	0.010	mg/L	C	U
Dibromochloromethane	0.010	mg/L	C	U
Ethylbenzene	0.010	mg/L	C	U
Methylene chloride	0.010	mg/L	C	U
Styrene	0.010	mg/L	C	U
Tetrachloroethene	0.010	mg/L	C	U
Toluene	0.010	mg/L	C	U
Trichloroethene	0.010	mg/L	C	U
Vinyl Acetate	0.010	mg/L	C	UJ
Vinyl chloride	0.010	mg/L	C	U
Xylenes, Total	0.010	mg/L	C	U
cis-1,3-Dichloropropene	0.010	mg/L	C	U
trans-1,3-Dichloropropene	0.010	mg/L	C	U

000971

TABLE D-15

TABLE D-15

LIME SLUDGE PONDS
ON-SITE LABORATORY SCREENING RESULTS
PHASE II FIELD INVESTIGATION
OPERABLE UNIT 2 REMEDIAL INVESTIGATION
FERNALD ENVIRONMENTAL MANAGEMENT PROJECT

SURFACE WATER SCREENING SAMPLES

Location	Sample No.	Description	Date Collected	Total Uranium (μg/L)
LSP-SW-01	114596	Duplicate of 114597	5/16/93	0.1
LSP-SW-01	114597	Surface Water	5/16/93	0.1

GROUNDWATER SCREENING SAMPLES

Location	Sample No.	Description	Date Collected	Total Uranium (μg/L)
1039	111991	Existing Monitoring Well	4/28/93	1.0
1041	116329	Existing Monitoring Well	5/5/93	9.4
1041	116330	Existing Monitoring Well	5/5/93	8.7
1042	110890	Existing Monitoring Well	4/22/93	29
1934	114621	Existing Monitoring Well	5/13/93	5.7
1937	114618	Existing Monitoring Well	5/11/93	5.1
1940	114786	New Monitoring Well	6/11/93	6.6
2042	110991	Existing Monitoring Well	5/4/93	3.4
2042	110992	Existing Monitoring Well	5/4/93	3.5
2042	110996	Existing Monitoring Well	5/4/93	3.7
2042	110997	Existing Monitoring Well	5/4/93	3.8
2935	114923	New Monitoring well	6/13/93	2.8
2936	114791	New Monitoring Well	6/12/93	4.4
2936	114920	Duplicate of 114791	6/12/93	4.2
2939	114926	New Monitoring Well	6/13/93	1.9
K-65 TR[a]	114770	K-65 Trench	5/26/93	77

SURFACE SCREENING SAMPLES

Location	Sample No.	Sample Interval (ft.)[b]	Date Collected	Total Uranium (mg/kg)
LSP-TR-01	114584	0.0-0.5	5/11/93	38
LSP-TR-02	114585	0.0-0.5	5/11/93	19

See footnotes at end of table

TABLE D-15
(Continued)

SURFACE SCREENING SAMPLES (Continued)

Location	Sample No.	Sample Interval (ft.)[b]	Date Collected	Total Uranium (mg/kg)
LSP-SS-03	114470	0.0-0.5	5/1/93	<11
LSP-SS-04	114483	0.0-0.5	5/2/93	<11

SUBSURFACE SOILS SCREENING SAMPLES

Location	Sample No.	Sample Interval (ft.)	Date Collected	Total Uranium (mg/kg)	Total Thorium (mg/kg)	Radium 226/228 (pCi/g)
LSP-SB-01	114565	0.5-1.0	5/5/93	<11	-[c]	-
LSP-SB-02	114513	0.5-1.0	5/5/93	<11	-	-
LSP-SS-03	114471	0.5-1.0	5/1/93	<11	-	-
LSP-SS-04	114484	0.5-1.0	5/2/93	<11	-	-
LSP-SB-04	114573	0.5-1.0	5/6/93	<11	-	-
LSP-SB-05	114603	0.5-1.0	5/10/93	<11	-	-
1934	111182	4.0-6.0	5/1/93	<11	-	-
1937	111142	2.0-4.0	4/28/93	<11	-	-
1940	114674	6.0-6.5	5/15/93	<11	-	-
2935	110789	2.0-4.0	4/29/93	<11	-	-
2936	110942	4.0-6.0	4/29/93	<11	-	-
2939	110828	2.0-4.0	5/15/93	<11	-	-
K-65 TR[a]	114774	0.0-2.0	6/5/93	13	33	1.0/0.75
K-65 TR[a]	114777	0.0-6.0	6/7/93	210	301	76/58

GAMMA SCREENING SAMPLES

Location	Sample No.	Sample Interval (ft.)	Date Collected	Gamma Activity (pCi/g)
LSP-TR-02	114592	0.0-0.5	5/16/93	<29

[a]Sample is from a trench excavated parallel to the K-65 Slurry Line.
[b]Sample interval is depth, in feet, below the ground surface.
[c]Sample not analyzed for thorium or radium.

TABLE D-16

TABLE D-16A

LIME SLUDGE PONDS
CIS SURFACE SOIL ON-SITE ANALYTICAL DATA
OPERABLE UNIT 2 REMEDIAL INVESTIGATION
FERNALD ENVIRONMENTAL MANAGEMENT PROJECT

FEMP ID#	Date	Beginning/Ending Depth (ft.)	Isotope	Activity (pCi/g)	Uncertainty	Qualifer[a]
FMP-SS-23-167	06-NOV-86	0/0.5	CS-137	0.90	NA	<
			RA-226	6.40	±0.80	
			RU-106	3.40	NA	<
			TH-232	7.50	±0.80	
			U-238	13.80	±5.10	
FMP-SS-46-187	13-FEB-87	0/0.5	CS-137	0.3	NA	<
			K-40	4.4	2.6	
			RA-226	0.7	NA	<
			RU-106	6.9	NA	<
			TH-232	1.2	NA	<
			U-238	30.6	4.3	
FMP-SS-46-188	13-FEB-87	0/0.5	CS-137	0.1	NA	<
			K-40	4	2	
			RA-226	1.3	NA	<
			RU-106	7.7	NA	<
			TH-232	0.2	NA	<
			U-238	3	NA	<
FMP-SS-46-189	13-FEB-87	00.5	CS-137	1.1	NA	<
			K-40	13.4	4.2	
			RA-226	0.7	0.3	
			RU-106	0.6	NA	<
			TH-232	0.9	0.4	
			U-238	5.8	2	
FMP-SS-46-537	12-MAY-87	0/0.5	CS-137	0.6	NA	<
			K-40	27	NA	<
			RA-226	1.4	0.5	
			RU-106	1.2	NA	<
			TH-232	1.5	0.8	
			U-238	15.6	4.8	

See footnotes at end of table

TABLE D-16A
(Continued)

FEMP ID#	Date	Beginning/Ending Depth (ft.)	Isotope	Activity (pCi/g)	Uncertainty	Qualifer[a]
FMP-SS-46-622	12-MAY-87	0/0.5	CS-137	1.10	±.50	
			RA-226	1.30	±.70	
			RU-106	4.50	NA	<
			TH-232	2.70	±0.60	
			U-238	40.70	±6.20	
FMP-SL-23-128	30-APR-87	0.5/1	CS-137	0.20	NA	<
			RA-226	0.90	±.20	
			RU-106	7.40	NA	<
			TH-232	1.40	±0.40	
			U-238	14.10	NA	<
FMP-SL-23-129	30-APR-87	1/1	CS-137	.60	NA	<
			RA-226	0.70	NA	<
			RU-106	5.40	NA	<
			TH-232	1.10	±0.30	
			U-238	2.50	NA	<
FMP-SL-23-130	30-APR-87	0.50/1.50	CS-137	1.00	NA	<
			RA-226	4.30	±.50	
			RU-106	4.30	NA	<
			TH-232	0.60	±0.40	
			U-238	4.50	±3.00	
FMP-SL-23-131	30-APR-87	1/1.5	CS-137	0.40	NA	<
			RA-226	0.90	±.50	
			RU-106	3.70	NA	<
			TH-232	1.00	±0.30	
			U-238	6.00	NA	<
FMP-SL-23-191	30-APR-87	0.5/1	CS-137	1.3	NA	<
			K-40	7.6	3.3	
			RA-226	1.6	0.4	
			RU-106	4.2	NA	<
			TH-232	2.2	0.4	
			U-238	8.7	NA	<
FMP-SL-23-191D	30-APR-87	0.5/1	CS-137	0.9	NA	<
			K-40	0.1	4	
			RA-226	1.1	0.4	

See footnotes at end of table

CC0975

TABLE D-16A
(Continued)

FEMP ID#	Date	Beginning/Ending Depth (ft.)	Isotope	Activity (pCi/g)	Uncertainty	Qualifer[a]
FMP-SL-23-191D (Continued)	30-APR-87	0.5/1	RU-106	10	NA	<
			TH-232	1.9	0.5	
			U-238	14.5	NA	<
FMP-SL-23-192	30-APR-87	1/1.5	CS-137	0.9	NA	<
			RA-226	0.9	0.3	
			RU-106	5.8	NA	<
			TH-232	1.1	0.4	
			U-238	11.5	NA	<
FMP-SL-23-195	30-APR-87	0.5/1	CS-137	0.4	NA	<
			K-40	11	4.1	
			RA-226	1.4	0.3	
			RU-106	5.7	NA	<
			TH-232	0.3	NA	<
			U-238	14	NA	<
FMP-SS-23-001	06-NOV-86	0/0.5	CS-137	1.1	NA	<
			K-40	9.1	3.6	
			RA-226	3.8	0.6	
			RU-106	0.7	NA	<
			TH-232	1.7	1.2	
			U-238	8.2	7.6	
FMP-SS-23-003	06-NOV-86	0/0.5	CS-137	1	NA	<
			K-40	19	6.2	
			RA-226	1.4	0.3	
			RU-106	1	NA	<
			TH-232	2.8	1.3	
			U-238	14.2	5.3	
FMP-SS-23-006	06-NOV-86	0/0.5	CS-137	1.1	NA	<
			K-40	11.5	4.4	
			RA-226	0.8	0.3	
			RU-106	0.8	NA	<
			TH-232	0.4	NA	<
			U-238	4	3	

See footnotes at end of table

TABLE D-16A
(Continued)

FEMP ID#	Date	Beginning/Ending Depth (ft.)	Isotope	Activity (pCi/g)	Uncertainty	Qualifer[a]
FMP-SS-23-010	06-NOV-86	0/0.5	CS-137	0.7	NA	<
			K-40	8.6	3.6	
			RA-226	2.6	0.5	
			RU-106	11.6	NA	<
			TH-232	1.6	0.8	
			U-238	11.5	5.5	
FMP-SS-23-010QC	06-NOV-86	0/0.5	CS-137	0.8	0.3	
			K-40	11.5	4.1	
			RA-226	2	0.6	
			RU-106	0.7	NA	<
			TH-232	1.4	0.8	
			U-238	14.6	5.1	
FMP-SS-23-011	06-NOV-86	0/0.5	CS-137	1.3	NA	<
			K-40	10.8	2	
			RA-226	4.7	0.6	
			RU-106	9.5	NA	<
			TH-232	0.8	NA	<
			U-238	8.8	4.1	
FMP-SS-23-012	06-NOV-86	0/0.5	CS-137	1.3	NA	<
			K-40	12.1	6.2	
			RA-226	19.8	1.3	
			RU-106	16.1	NA	<
			TH-232	4.6	1.1	
			U-238	12.7	8	
FMP-SS-23-012D	06-NOV-86	0/0.5	CS-137	0.9	0.7	
			K-40	8	NA	<
			RA-226	19	1.2	
			RU-106	6.9	NA	<
			TH-232	2.9	1.5	
			U-238	11	NA	<
FMP-SS-23-013	06-NOV-86	0/0.5	CS-137	1.8	0.5	
			K-40	8.3	6	
			RA-226	6.7	0.9	
			RU-106	8	NA	<

See footnotes at end of table

TABLE D-16A
(Continued)

FEMP ID#	Date	Beginning/Ending Depth (ft.)	Isotope	Activity (pCi/g)	Uncertainty	Qualifer[a]
FMP-SS-23-013	06-NOV-86	0/0.5	TH-232	9.2	3.3	
			U-238	19.1	7.4	
FMP-SS-23-014	06-NOV-86	0/0.5	CS-137	0.5	0.3	
			K-40	8.1	3.1	
			RA-226	4.4	0.9	
			RU-106	10.6	NA	<
			TH-232	2.2	0.8	
			U-238	12.4	3.3	
FMP-SS-23-164	06-APR-87	0/0.5	CS-137	0.4	0.2	
			K-40	10.9	4	
			RA-226	4.3	0.7	
			RU-106	0.6	NA	<
			TH-232	2.4	NA	<
			U-238	12.1	NA	<
FMP-SS-23-165	06-APR-87	0/0.5	CS-137	0.3	NA	<
			K-40	8.1	4.2	
			RA-226	1.8	0.5	
			RU-106	5.7	NA	<
			TH-232	0.7	0.6	
			U-238	3.4	2.4	
FMP-SS-23-166	06-APR-87	0/0.5	CS-137	0.8	0.5	
			K-40	10.6	3.8	
			RA-226	11	0.6	
			RU-106	5.4	NA	<
			TH-232	3	0.9	
			U-238	6.3	2.6	
FMP-SS-23-189	30-APR-87	0/0.5	CS-137	0.7	NA	<
			K-40	14.7	6	
			RA-226	3.3	0.8	
			RU-106	5.5	NA	<
			TH-232	4.1	0.8	
			U-238	11.4	3.4	

See footnotes at end of table

TABLE D-16A
(Continued)

FEMP ID#	Date	Beginning/Ending Depth (ft.)	Isotope	Activity (pCi/g)	Uncertainty	Qualifer[a]
FMP-SS-23-190QC	30-APR-87	0/0.5	CS-137	1.2	NA	<
			K-40	12	4.7	
			RA-226	2.4	0.6	
			RU-106	3.7	NA	<
			TH-232	3.1	0.5	
			U-238	7.3	5	
FMP-SS-23-193	30-APR-87	0/0.5	CS-137	0.9	NA	<
			K-40	1.4	NA	<
			RA-226	1.6	0.5	
			RU-106	9.4	NA	<
			TH-232	3.2	0.7	
			U-238	13	6.2	
FMP-SS-23-194	30-APR-87	0/0.5	CS-137	1.9	NA	<
			K-40	4.5	3.2	
			RA-226	3.3	0.7	
			RU-106	11.5	NA	<
			TH-232	5.9	0.7	
			U-238	29.3	NA	<
FMP-SS-23-197	30-APR-87	0/0.5	CS-137	0.5	NA	<
			K-40	8.5	3.4	
			RA-226	1.4	0.3	
			RU-106	7	NA	<
			TH-232	0.7	0.3	
			U-238	10.6	5.6	
FMP-SS-46-540	12-MAY-87	0/0.16	CS-137	1.1	0.5	
			K-40	15.8	6.6	
			RA-226	7.8	1	
			RU-106	13.9	NA	<
			TH-232	1.2	NA	<
			U-238	15.7	6.4	
FMP-SS-46-541	12-MAY-87	0.16/0.5	CS-137	0.6	NA	<
			K-40	21	6.7	
			RA-226	6.1	0.9	
			RU-106	7.8	NA	<

See footnotes at end of table

TABLE D-16A
(Continued)

FEMP ID#	Date	Beginning/Ending Depth (ft.)	Isotope	Activity (pCi/g)	Uncertainty	Qualifer[a]
FMP-SS-46-541 (Continued)	12-MAY-87	0.16/0.5	TH-232	1.8	NA	<
			U-238	31.2	NA	<

[a]Laboratory Qualifiers, no data validation was performed on screening data.

[b]NA = Not applicable

[c]< = Less than

TABLE D-16B

LIME SLUDGE PONDS
FEMP LABORATORY SCREENING DATA RESULTS
ACTIVITY CONCENTRATIONS OF CIS PROFILE SAMPLES
OPERABLE UNIT 2 REMEDIAL INVESTIGATION
FERNALD ENVIRONMENTAL MANAGEMENT PROJECT

Begin - End Depth (feet)	Radionuclide	Qualifier[a]	Activity Concentrations (pCi/g)	Uncertainty Value (pCi/g)
		BOREHOLE 47-01		
0 - 0.50	radium-226		0.70	0.50
0 - 0.50	thorium-232		0.90	0.30
0 - 0.50	uranium-238		5.80	2.20
0.50 - 1.80	radium-226	<[b]	0.60	NA[c]
0.50 - 1.80	thorium-232	<	2.40	NA
0.50 - 1.80	uranium-238		2.30	1.90
1.80 - 3.50	radium-226	<	1.30	NA
1.80 - 3.50	thorium-232	<	0.40	NA
1.80 - 3.50	uranium-238	<	8.30	NA
		BOREHOLE 47-02		
0.50 - 2.20	radium-226	<	0.60	NA
0.50 - 2.20	thorium-232		0.50	0.20
0.50 - 2.20	uranium-238	<	1.70	1.10
2.20 - 3.80	radium-226	<	0.50	NA
2.20 - 3.80	thorium-232	<	0.40	NA
2.20 - 3.80	uranium-238	<	4.30	NA
3.80 - 5.50	radium-226	<	0.70	NA
3.80 - 5.50	thorium-232	<	0.30	NA
3.80 - 5.50	uranium-238		2.80	1.60
		BOREHOLE 47-03		
2.00 - 3.60	radium-226	<	1.30	NA
2.00 - 3.60	thorium-232		0.50	0.20
2.00 - 3.60	uranium-238	<	6.80	NA
3.60 - 5.30	radium-226	<	0.10	NA
3.60 - 5.30	thorium-232	<	1.30	NA
3.60 - 5.30	uranium-238	<	3.80	NA
5.30 - 7.00	radium-226		0.90	0.40
5.30 - 7.00	thorium-232	<	1.40	NA
5.30 - 7.00	uranium-238		6.90	5.20
		BOREHOLE 48-01		
2.00 - 3.00	radium-226	<	1.70	NA
2.00 - 3.00	thorium-232		0.60	0.20
2.00 - 3.00	uranium-238		6.70	2.80

See footnotes at end of table

TABLE D-16B
(Continued)

Begin - End Depth (feet)	Radionuclide	Qualifier[a]	Activity Concentrations (pCi/g)	Uncertainty Value (pCi/g)
		BOREHOLE 48-01 (Continued)		
3.00 - 4.00	radium-226	<	1.20	NA
3.00 - 4.00	thorium-232	<	0.50	NA
3.00 - 4.00	uranium-238	<	7.40	NA
4.00 - 5.00	radium-226	<	1.30	NA
4.00 - 5.00	thorium-232	<	0.20	NA
4.00 - 5.00	uranium-238		2.80	1.40
5.00 - 6.00	radium-226	<	0.60	NA
5.00 - 6.00	thorium-232	<	0.20	NA
5.00 - 6.00	uranium-238	<	4.20	NA
6.00 - 7.00	radium-226	<	1.40	NA
6.00 - 7.00	thorium-232	<	0.30	NA
6.00 - 7.00	uranium-238		4.10	1.40
7.00 - 8.00	radium-226	<	1.30	NA
7.00 - 8.00	thorium-232	<	1.50	NA
7.00 - 8.00	uranium-238	<	5.60	NA
		BOREHOLE 48-02		
0 - 2.00	radium-226	<	0.20	NA
0 - 2.00	thorium-232	<	0.40	2.70
0 - 2.00	uranium-238		4.00	NA
2.00 - 3.00	radium-226	<	1.60	NA
2.00 - 3.00	thorium-232	<	2.60	NA
2.00 - 3.00	uranium-238	<	4.80	NA
3.00 - 4.00	radium-226	<	0.10	NA
3.00 - 4.00	thorium-232	<	0.30	NA
3.00 - 4.00	uranium-238		2.70	1.20
4.00 - 5.00	radium-226	<	0.10	NA
4.00 - 5.00	thorium-232	<	0.30	NA
4.00 - 5.00	uranium-238	<	11.20	NA
5.00 - 6.00	radium-226	<	2.20	NA
5.00 - 6.00	thorium-232	<	0.40	NA
5.00 - 6.00	uranium-238	<	5.50	NA
6.00 - 7.00	radium-226	<	1.50	NA
6.00 - 7.00	thorium-232	<	1.50	NA
6.00 - 7.00	uranium-238		2.00	1.60
7.00 - 8.00	radium-226	<	1.40	NA
7.00 - 8.00	thorium-232		0.40	0.20
7.00 - 8.00	uranium-238	<	12.00	NA

See footnotes at end of table

TABLE D-16B
(Continued)

Begin - End Depth (feet)	Radionuclide	Qualifier[a]	Activity Concentrations (pCi/g)	Uncertainty Value (pCi/g)
		BOREHOLE 48-02		
8.00 - 9.00	radium-226	<	0.20	NA
8.00 - 9.00	thorium-232	<	1.10	NA
8.00 - 9.00	uranium-238	<	1.80	NA
		BOREHOLE 48-03		
0 - 1.00	radium-226	<	0.20	NA
0 - 1.00	thorium-232	<	0.40	NA
0 - 1.00	uranium-238		3.20	1.60
1.00 - 2.00	radium-226	<	0.10	NA
1.00 - 2.00	thorium-232	<	0.40	NA
1.00 - 2.00	uranium-238	<	10.10	0.50
2.00 - 3.00	radium-226		1.10	NA
2.00 - 3.00	thorium-232	<	0.70	NA
2.00 - 3.00	uranium-238	<	9.80	NA
3.00 - 4.00	radium-226		2.00	0.80
3.00 - 4.00	thorium-232	<	0.60	NA
3.00 - 4.00	uranium-238	<	13.40	NA
4.00 - 5.00	radium-226	<	1.00	NA
4.00 - 5.00	thorium-232	<	0.40	NA
4.00 - 5.00	uranium-238	<	5.60	NA
5.00 - 6.00	radium-226	<	0.70	NA
5.00 - 6.00	thorium-232	<	0.40	NA
5.00 - 6.00	uranium-238		4.70	3.50
6.00 - 7.00	radium-226	<	0.50	NA
6.00 - 7.00	thorium-232		0.30	0.20
6.00 - 7.00	uranium-238	<	7.20	NA
7.00 - 8.00	radium-226	<	0.90	NA
7.00 - 8.00	thorium-232	<	0.20	NA
7.00 - 8.00	uranium-238	<	6.90	NA
8.00 - 9.00	radium-226	<	1.00	NA
8.00 - 9.00	thorium-232	<	2.30	NA
8.00 - 9.00	uranium-238		4.40	1.30

[a]Laboratory Qualifiers, no data validation was performed on screening data.

[b]< = Less than

[c]NA = Not applicable

000983

TABLE D-16C

LIME SLUDGE PONDS
CIS FIDLER SURFACE READINGS
OPERABLE UNIT 2 REMEDIAL INVESTIGATION
FERNALD ENVIRONMENTAL MANAGEMENT PROJECT

Coordinates		
North	East	Reading (CPM)
480453.44	1379515.88	18912.00
480453.44	1379515.88	19355.00
480503.44	1379517.25	17700.00
480503.44	1379517.25	17868.00
480453.28	1379522.13	31414.00
480459.53	1379522.25	39736.00
480465.78	1379522.50	43166.00
480472.00	1379522.63	36810.00
480703.34	1379522.75	21740.00
480478.25	1379522.88	39474.00
480478.25	1379522.88	37501.00
480484.50	1379523.00	30151.00
480490.75	1379523.13	33520.00
480497.00	1379523.38	31915.00
480503.25	1379523.50	28302.00
480753.34	1379524.13	26343.00
480453.09	1379528.38	29127.00
480459.34	1379528.50	29851.00
480465.59	1379528.75	30457.00
480471.84	1379528.88	32086.00
480478.09	1379529.00	25424.00
480478.09	1379529.00	25752.00
480484.34	1379529.25	31747.00
480490.59	1379529.38	36364.00
480496.84	1379529.65	33520.00
480503.09	1379529.75	24001.00

TABLE D-16C
(Continued)

Coordinates		
North	East	Reading (CPM)
480452.94	1379534.63	29279.00
480459.19	1379534.75	31915.00
480465.44	1379534.00	25532.00
480471.69	1379534.13	25532.00
480477.91	1379534.25	21353.00
480477.91	1379534.25	25424.00
480484.16	1379535.50	28170.00
480490.41	1379535.63	33520.00
480496.66	1379535.88	26906.00
480502.91	1379536.00	28719.00
480503.09	1379529.75	24001.00
480427.78	1379540.25	27273.00
480434.00	1379540.38	11195.00
480440.25	1379540.50	32619.00
480446.50	1379540.75	26667.00
480452.75	1379540.88	30457.00
480477.75	1379541.50	28986.00
480484.00	1379541.75	29279.00
480490.25	1379541.88	29815.00
480496.50	1379542.13	29412.00
480502.75	1379542.25	31589.00
480427.59	1379546.38	28170.00
480433.84	1379546.63	14320.00
480440.09	1379546.75	35098.00
480446.34	1379547.00	26201.00
480452.59	1379547.13	31589.00
480427.44	1379552.63	32269.00
480433.69	1379552.88	21202.00
480439.91	1379553.00	37736.00

TABLE D-16C
(Continued)

Coordinates		
North	East	Reading (CPM)
480446.16	1379553.25	30938.00
480452.41	1379553.38	31058.00
480427.25	1379558.88	35939.00
480433.50	1379559.13	16043.00
480439.75	1379559.25	26906.00
480446.00	1379559.50	36364.00
480452.25	1379559.63	29127.00
480427.09	1379565.13	33718.00
480433.34	1379565.38	28302.00
480439.59	1379565.50	29412.00
480445.81	1379565.75	30613.00
480452.06	1379565.88	28302.00
480452.06	1379565.88	21284.00
480502.06	1379567.25	16077.00
480552.03	1379568.63	15791.00
480420.66	1379571.25	42868.00
480751.97	1379574.13	22923.00
480751.97	1379574.13	19481.00
480758.22	1379574.25	29279.00
480764.47	1379574.38	33718.00
480770.72	1379574.63	32086.00
480420.50	1379577.50	43796.00
480426.75	1379577.63	28170.00
480751.78	1379580.38	20690.00
480758.03	1379580.50	21661.00
480764.28	1378580.63	30457.00
480770.53	1379580.88	33718.00
480420.31	1379583.75	45802.00
480426.56	1379583.88	40817.00

TABLE D-16C
(Continued)

Coordinates		
North	East	Reading (CPM)
480751.63	1379586.63	22999.00
480757.88	1379586.75	18692.00
480764.13	1379586.88	35295.00
480770.38	1379581.13	48001.00
480420.16	1379590.00	69450.00
480426.41	1379590.13	42254.00
480751.44	1379592.88	17342.00
480757.69	1379593.00	19293.00
480763.94	1379593.13	27038.00
480770.19	1379593.38	35939.00
480419.97	1379596.25	51725.00
480426.22	1379596.38	31915.00
480751.28	1379599.00	20067.00
480757.53	1379599.25	21661.00
480763.78	1379599.38	26432.00
480770.03	1379599.63	42868.00
480426.06	1379602.63	25211.00
480425.72	1379615.13	21202.00
480450.72	1379615.88	20493.00
480500.69	1379617.25	15429.00
480550.66	1379618.63	18766.00
480750.59	1379624.00	44773.00
480424.34	1379665.13	29412.00
480424.34	1379665.13	37501.00
480430.59	1379665.25	28572.00
480436.84	1379665.50	31099.00
480443.09	1379665.63	29412.00
480449.34	1379665.88	29557.00
480449.34	1379665.88	21582.00

TABLE D-16C
(Continued)

Coordinates		
North	East	Reading (CPM)
480499.31	1379667.25	16558.00
480549.31	1379668.50	19585.00
480424.19	1379671.38	32978.00
480424.19	1379671.38	32269.00
480430.44	1379671.50	25105.00
480436.69	1379671.75	29127.00
480442.91	1379671.88	37251.00
480449.16	1379672.13	29557.00
480424.00	1379677.63	41380.00
480424.00	1379677.63	47245.00
480430.25	1379677.75	29127.00
480436.50	1379678.00	27918.00
480442.75	1379678.13	33905.00
480449.00	1379678.38	33718.00
480373.84	1379682.50	23167.00
480380.09	1379682.63	26432.00
480386.34	1379682.88	22141.00
480392.59	1379683.00	27273.00
480423.84	1379683.88	377360.00
480423.84	1379683.88	303040.00
480430.09	1379684.00	26316.00
480436.34	1379684.25	36810.00
480442.56	1379684.38	30770.00
480448.81	1379684.63	29851.00
480423.66	1379690.13	112580.00
480423.66	1379690.13	93170.00
480423.66	1379690.13	89830.00
480429.91	1379690.25	27038.00
480429.91	1379690.25	26906.00

TABLE D-16C
(Continued)

Coordinates		
North	East	Reading (CPM)
480436.16	1379690.50	37736.00
480436.16	1379690.50	28048.00
480442.41	1379690.63	23716.00
480442.41	1379690.63	26316.00
480448.66	13799690.88	31414.00
480448.66	1379690.88	35504.00
480423.50	1379696.38	132750.00
480429.75	1379696.50	26087.00
480436.00	1379696.75	32269.00
480442.25	1379696.88	31589.00
480448.47	1379697.13	32978.00
480423.31	1379702.63	143890.00
480429.56	1379702.75	30613.00
480435.81	1379703.00	26667.00
480442.06	1379703.13	32978.00
480448.31	1379703.25	34683.00
480423.16	1379708.88	81530.00
480429.41	1379709.00	26786.00
480435.66	1379709.25	33334.00
480441.91	1379709.38	31414.00
480448.16	1379709.50	33718.00
480422.97	1379715.13	149260.00
480429.22	1379715.25	21439.00
480435.47	1379715.50	24490.00
480441.72	1379715.63	32978.00
480447.97	1379715.75	27650.00
480447.97	1379715.75	28749.00
480497.94	1379717.13	16677.00
480547.94	1379718.50	16777.00

TABLE D-16C
(Continued)

Coordinates		
North	East	Reading (CPM)
480422.81	1379721.38	105080.00
480429.06	1379721.50	23077.00
480435.31	1379721.75	25317.00
480441.56	1379721.88	32619.00
480447.81	1379722.00	29279.00
480422.63	1379727.63	108500.00
480428.88	1379727.75	23623.00
480435.13	1379728.00	25317.00
480441.38	1379728.13	31915.00
480447.63	1379728.25	33520.00
480422.47	1379733.88	94640.00
480428.72	1379734.00	28572.00
480434.97	1379734.25	24391.00
480441.22	1379734.38	28719.00
480447.47	1379734.50	31251.00
480422.28	1379740.13	76830.00
480428.53	1379740.25	26087.00
480434.78	1379740.50	28170.00
480441.03	1379740.63	27788.00
480447.28	1379740.75	30613.00
480422.13	1379746.38	42554.00
480421.97	1379752.63	36364.00
480421.78	1379758.88	38710.00
480421.63	1379765.13	41667.00
480446.59	1379765.75	27317.00
480496.59	1379767.13	17842.00
480421.44	1379771.38	32787.00
480421.28	1379777.63	37736.00
480421.09	1379783.88	31251.00

TABLE D-16C
(Continued)

Coordinates		
North	East	Reading (CPM)
480420.94	1379790.13	37278.00
480420.75	1379796.38	58824.00
480420.59	1379802.63	19428.00
480770.63	1379805.88	42554.00
480420.41	1379808.88	47620.00

TABLE D-16D

LIME SLUDGE POND
CIS EXPOSURE RATE MEASUREMENTS
OPERABLE UNIT 2 REMEDIAL INVESTIGATION
FERNALD ENVIRONMENTAL MANAGEMENT PROJECT

Coordinates		
North	East	Reading (microR/HR)
480585.66	1379619.50	36.00
480585.66	1379619.50	31.22
480503.44	1379517.25	27.53
480497.94	1379717.13	27.29

TABLE D-16E

LIME SLUDGE PONDS
CIS BETA GAMMA DOSE RATE MEASUREMENTS
OPERABLE UNIT 2 REMEDIAL INVESTIGATION
FERNALD ENVIRONMENTAL MANAGEMENT PROJECT

Coordinates		
North	East	Reading (microR/HR)
480753.34	1379524.13	0.11
480703.34	1379522.75	0.07
480653.38	1379521.38	0.06
480603.38	1379520.00	0.06
480553.41	1379518.63	0.07
480751.97	1379574.13	0.11
480552.03	1379568.63	0.06
480750.59	1379624.00	0.17
480550.66	1379618.63	0.06
480749.22	1379674.00	0.07
480549.31	1379668.50	0.05
480747.84	1379724.00	0.09
480547.94	1379718.50	0.05
480746.50	1379774.00	0.04
480546.56	1379768.50	0.05
480503.44	1379517.25	0.04
480453.44	1379515.88	0.04
480403.47	1379514.50	0.05
480502.06	1379567.25	0.03
480452.06	1379565.88	0.05
480402.09	1379564.50	0.05
480500.69	1379617.25	0.05
480450.72	1379615.88	0.05
480400.72	1379614.50	0.07
480499.31	1379667.25	0.03
480449.34	1379665.88	0.06
480497.94	1379717.13	0.03
480447.97	1379715.75	0.06
480496.59	1379767.13	0.04
480446.59	1379765.75	0.06

FIGURE D-16A

LIME SLUDGE PONDS
CIS FIDLER MEASUREMENT CONTOURS
OPERABLE UNIT 2 REMEDIAL INVESTIGATION
FERNALD ENVIRONMENTAL MANAGEMENT PROJECT

(Contour intervals at 50,000 and 75,000 CPM)

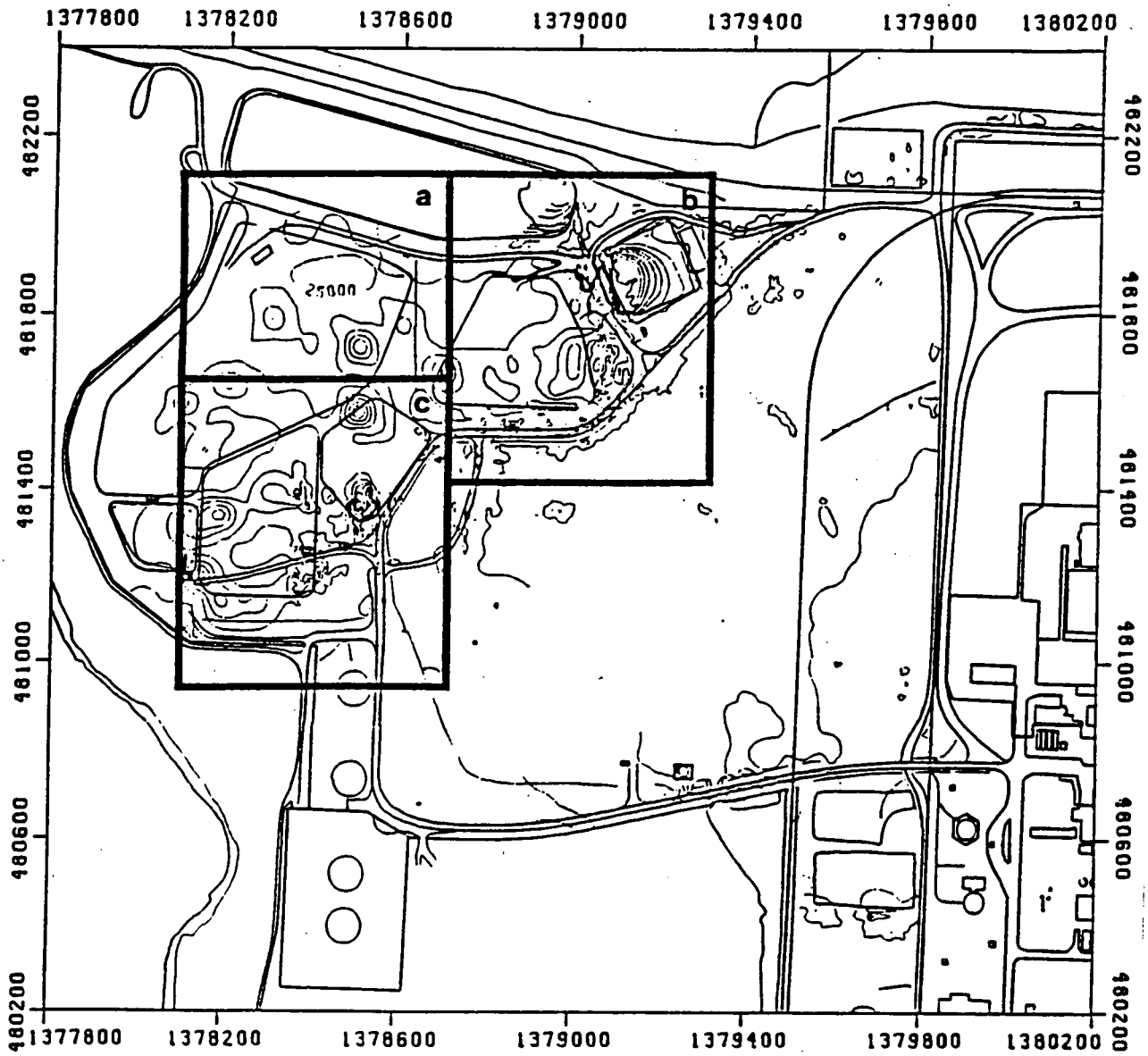

FIGURE D-16B

**LIME SLUDGE PONDS
CIS EXPOSURE RATE CONTOURS
OPERABLE UNIT 2 REMEDIAL INVESTIGATION
FERNALD ENVIRONMENTAL MANAGEMENT PROJECT**

(Contour intervals at 1.0 and 20.0 microR/hr)

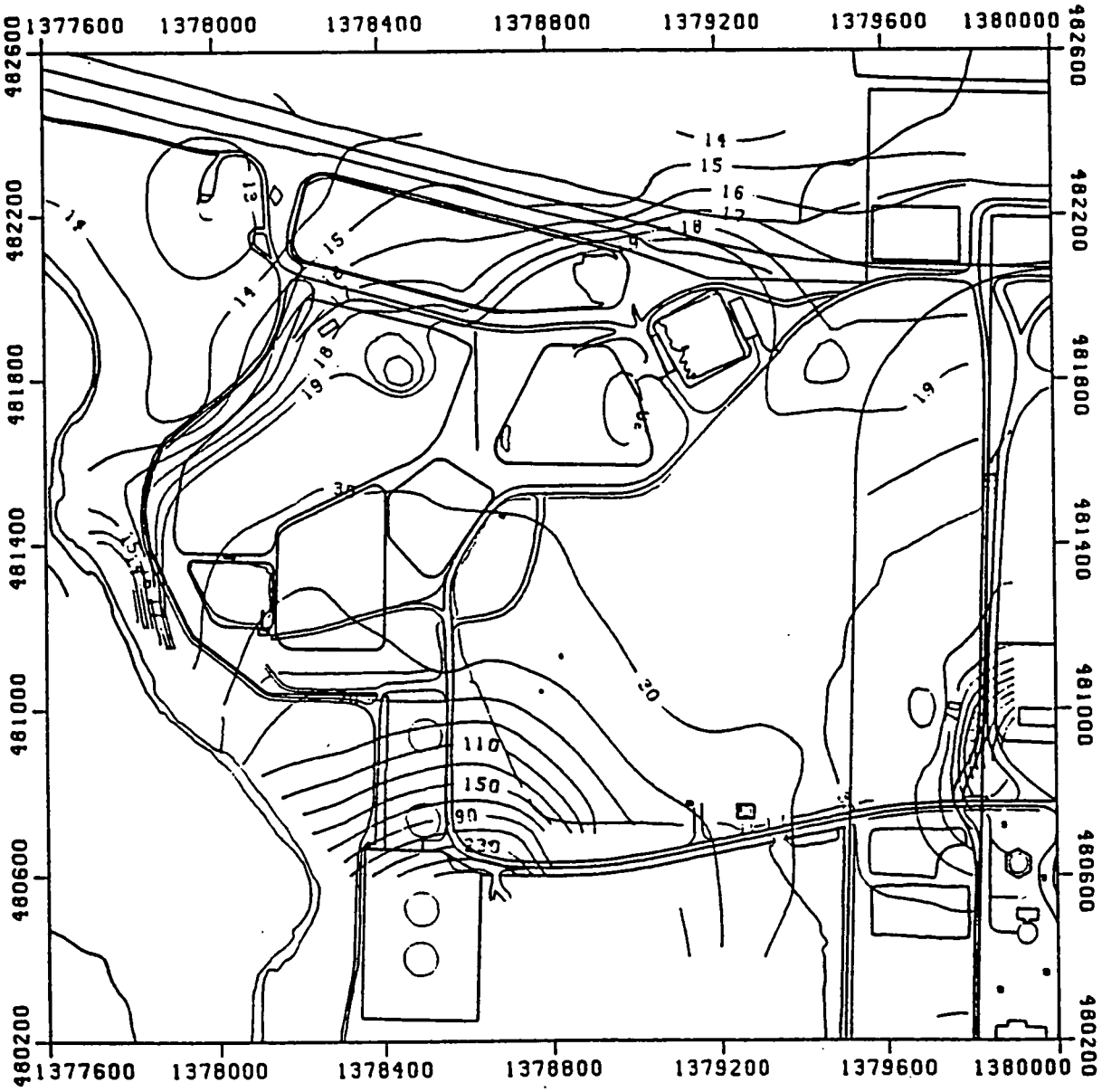

000995

FIGURE D-16C

LIME SLUDGE PONDS
CIS BETA GAMMA DOSE RATE CONTOURS
OPERABLE UNIT 2 REMEDIAL INVESTIGATION
FERNALD ENVIRONMENTAL MANAGEMENT PROJECT

(Contour intervals at 0.2, 1.0 and 5.0 mRad/hr)

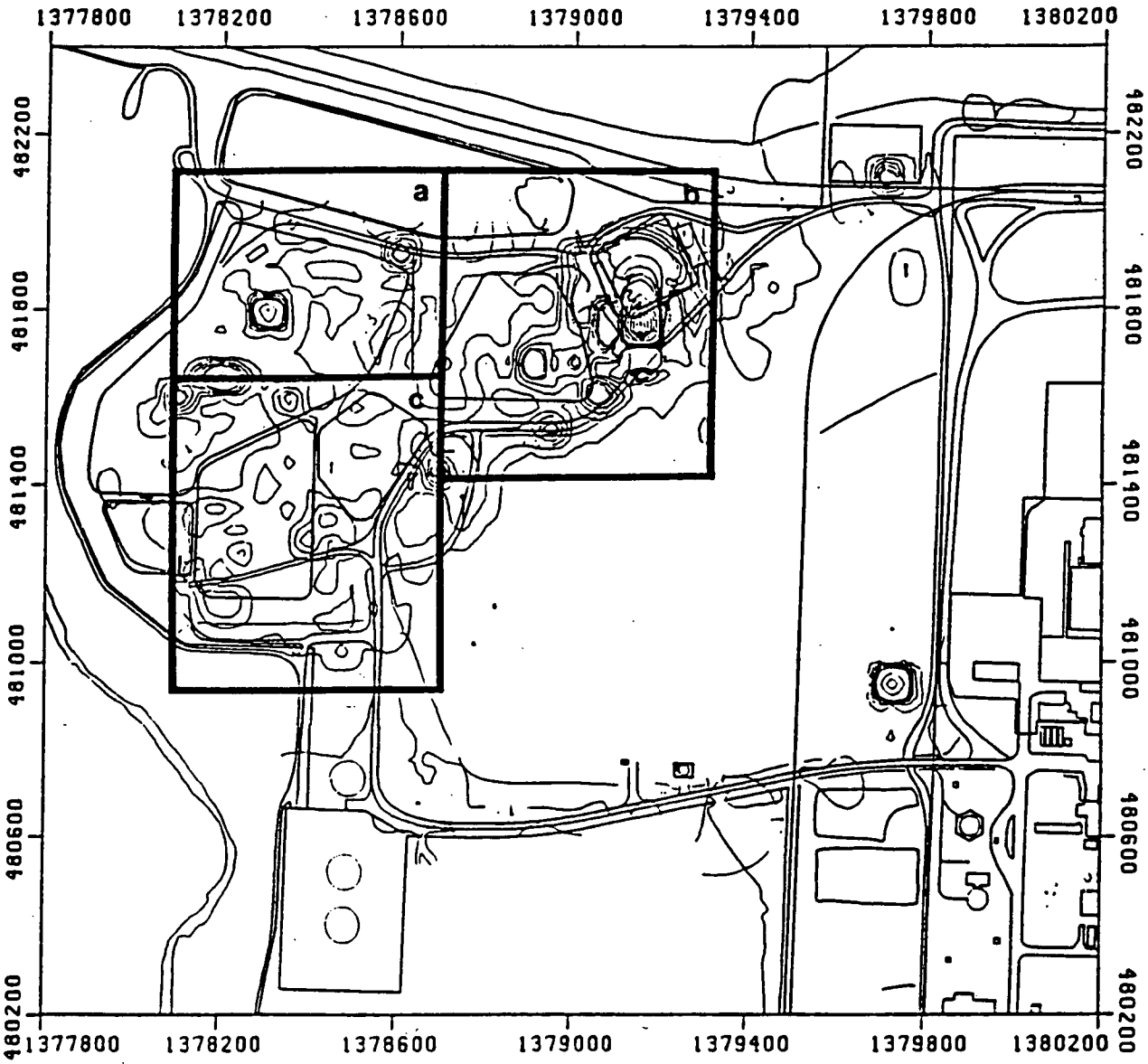

TABLE D-17

TABLE D-17A

LIME SLUDGE PONDS
GEOTECHNICAL ANALYSIS
PHASE I FIELD INVESTIGATION
OPERABLE UNIT 2 REMEDIAL INVESTIGATION
FERNALD ENVIRONMENTAL MANAGEMENT PROJECT

SURFACE SAMPLES

Location	Wet Density (pcf)[a]	Dry Density (pcf)	Moisture Content (%)
#12	83.1	46.8	77.6
#13	80.8	47.7	69.5
#14	79.7	50.5	57.8
#15	81.1	44.4	82.7

[a]pounds per cubic foot

TABLE D-17B

LIME SLUDGE POND
GEOTECHNICAL ANALYSIS
PHASE II FIELD INVESTIGATION
OPERABLE UNIT 2 REMEDIAL INVESTIGATION
FERNALD ENVIRONMENTAL MANAGEMENT PROJECT

Location	Sample No.	Date Sampled	Sample Interval (ft)[a]	Specific Gravity	Moisture Content (%)	Bulk Density Unit Weight (pcf)[b]	Dry Density (pcf)	Atterberg Limits			Permeability (cm/s)	Wet Denisity (pcf)
								Liquid Limit	Plastic Limit	Plasticity Index		
LSP-SS-06	114493	5/11/93	0.0-0.5	-[d]	84.0	-	-	-	-	-	-	-
LSP-SB-01	114568	5/11/93	1.0-3.0	2.6959	23.9	-	-	34	19	15	-	-
LSP-SB-04	114574	5/11/93	1.0-3.0	2.6101	24.4	-	-	42	17	25	-	-
LSP-SB-07	114575	5/11/93	1.0-3.0	2.6752	24.2	-	-	34	18	16	-	-
1934	111184	5/11/93	4.0-6.0	2.6850	22.2	-	-	30	16	14	-	-
	114540	5/11/93	2.0-4.0	-	-	123.9	99.0	-	-	-	-	-
1937	111141	5/11/93	2.0-4.0	2.7318	17.6	-	-	31	17	14	-	-
1940	114671	5/15/93	2.0-4.0	-	-	126.9	105.7	-	-	-	-	-
	114672	5/15/93	4.0-6.0	2.7150	23.2	-	-	34	17	17	-	-
1956	114861	6/10/93	0.0-4.0	-	115.9	-	-	-	-	-	-	-
	114862	6/10/93	7.0-9.0	2.7483	35.6	-	-	27	15	12	-	-
1957	114854	6/7/93	0.5-2.0	-	99.9	-	-	-	-	-	-	-
	114855	6/7/93	2.0-4.0	2.6628	33.8	-	-	41	16	25	-	-
1958	114827	6/6/93	0.5-2.5	-	102.6	-	-	-	-	-	-	-
	114828	6/6/93	5.0-6.0	2.7514	32.2	-	-	40	18	22	-	-

TABLE D-17B
(Continued)

Location	Sample No.	Date Sampled	Sample Interval (ft)[a]	Specific Gravity	Moisture Content (%)	Bulk Density Unit Weight (pcf)[b]	Dry Density (pcf)	Atterberg Limits			Permeability (cm/s)	Wet Denisity (pcf)
								Liquid Limit	Plastic Limit	Plasticity Index		
1959	114818	6/5/93	2.0-3.0	-	145.3	-	-	-	-	-	-	-
	114819	6/5/93	3.0-5.0	-	133.5	-	-	-	-	-	-	-
	114820	6/5/93	11.0-13.5	2.7415	29.5	-	-	22	14	8	-	-
1960	114736	5/27/93	2.5-5.0	-	105.0	-	-	-	-	-	-	-
1961	114748	6/1/93	7.0-9.0	2.6637	107.5	-	-	NP	NP	NP	-	-
	114749	6/1/93	10.0-12.0	2.7218	26.9	-	-	34	17	17	-	-
1962	114604	5/20/93	2.5-4.5	-	101.3	-	-	-	-	-	-	-
1963	114793	6/3/93	4.0-6.0	2.6515	81.9	-	-	NP	NP	NP	-	-
	114794	6/3/93	12.0-15.5	2.7584	29.1	-	-	31	17	14	-	-
2935	110790	5/11/93	2.0-4.0	2.8999	16.5	-	-	34	16	18	-	-
2936	110938	5/11/93	2.0-4.0	-	-	133.9	119.6	-	-	-	-	-
	110943	5/11/93	4.0-6.0	2.6943	11.4	-	-	24	13	11	-	-

[a]The sample interval is depth, in feet, below the ground surface

[b]Pounds per cubic foot

[c]Centimeters per second

[d]Sample not analyzed for this parameter

[e]NP = Nonplastic

FER\CRU2RI\JLG\TABD-17B.JLG\January 6, 1995 10:20am

TABLE D-17C

LIME SLUDGE PONDS
SIEVE ANALYSIS - ASTM D 422
PHASE II REMEDIAL INVESTIGATION
OPERABLE UNIT 2 REMEDIAL INVESTIGATION
FERNALD ENVIRONMENTAL MANAGEMENT PROJECT

Location	Sample No.	Date Sampled	Sample Interval (ft)[a]	Classification[b]	Sieve Analysis (% Passing Sieve No.)											
					3"	1.5"	0.75"	0.375"	#4	#10	#20	#40	#60	#100	#140	#200
LSP-SS-06	114493	5/11/93	0.0-0.5	NA[c]	100	100	100	100	100	100	100	99.8	99.5	99.0	98.8	98.6
LSP-SB-01	114568	5/11/93	1.0-3.0	CL	100	100	100	100	99.8	99.4	98.4	97.2	95.9	93.1	89.9	87.0
LSP-SB-04	114574	5/11/93	1.0-3.0	CL	100	100	100	100	99.7	99.5	98.8	97.7	96.0	93.1	91.0	89.5
LSP-SB-07	11575	5/11/93	1.0-3.0	CL	100	100	100	100	99.8	99.1	98.2	96.5	94.9	93.0	91.7	90.6
1934	111184	5/11/93	4.0-6.0	CL	100	100	96.3	95.8	94.8	93.0	92.4	91.7	91.9	90.5	90.0	89.6
1937	111141	5/11/93	2.0-4.0	CL	100	100	100	100	100	99.9	99.7	99.2	98.7	98.1	97.7	97.2
1940	114672	5/15/93	4.0-6.0	CL	100	100	100	100	100	100	99.7	99.1	98.2	97.5	96.6	95.4
1956	114862	6/8/93	7.0-9.0	CL	100	100	100	100	100	99.9	99.9	99.4	99.0	98.4	97.9	96.8
1957	114855	6/7/93	2.0-4.0	CL	100	100	100	100	100	100	99.6	98.8	98.0	95.1	91.8	89.2
1958	114828	6/6/93	5.0-6.0	CL	100	100	100	100	99.9	99.8	99.5	99.0	98.5	97.9	97.6	97.4
1959	114820	6/5/93	11.0-13.5	CL	100	100	100	100	99.9	99.6	99.2	98.5	96.0	90.4	83.2	77.7
1961	114748	6/1/93	7.0-9.0	CL	100	100	100	100	100	100	100	99.9	99.8	99.6	99.5	99.3
	114749	6/1/93	10.0-12.0	CL	100	100	100	100	100	99.8	99.5	98.9	98.3	97.4	96.2	95.0
1963	114793	6/3/93	4.0-6.0	CL	100	100	100	100	100	100	100	99.0	98.6	98.3	98.1	98.0
	114794	6/3/93	12.0-15.5	CL	100	100	100	100	100	100	99.9	99.8	99.6	99.2	98.5	97.7
2935	110790	5/11/93	2.0-4.0	CL	100	100	100	97.0	94.9	92.1	88.2	84.7	81.4	78.1	76.2	74.6
	110790	5/11/93	2.0-4.0	NA	100	100	91.2	88.4	82.3	76.2	68.1	60.8	55.9	52.4	50.4	48.8
2936	110943	5/11/93	4.0-6.0	SC	100	100	97.4	97.0	95.4	91.6	84.5	72.0	58.5	51.7	48.9	47.2

[a]The sample interval is depth, in feet, below the ground surface.

[b]Unified Soil Classification System (USCS)

CL = inorganic clays of low to medium plasticity, gravelly clays, sandy clays, silty clays, lean clays

NP = nonplastic

[c]NA = Not applicable

TABLE D-17D

LIME SLUDGE PONDS
HYDROMETER ANALYSIS - ASTM D 422
PHASE II FIELD INVESTIGATION
OPERABLE UNIT 2 REMEDIAL INVESTIGATION
FERNALD ENVIRONMENTAL MANAGEMENT PROJECT

LOCATION: LSP-SS-06 SAMPLE NO.: 114493 DEPTH: 0.0-0.5 ft.

Particle Diameter (mm)	0.05460	0.03956	0.02928	0.02141	0.01351	0.00956	0.00680	0.00481	0.00333	0.00137
Percent Finer	95.2	89.8	79.1	39.6	8.6	3.2	1.1	0.0	0.0	0.0

LOCATION: LSP-SB-01 SAMPLE NO.: 114568 DEPTH: 1.0-3.0 ft.

Particle Diameter (mm)	0.05044	0.03765	0.02729	0.01824	0.01133	0.00835	0.00608	0.00437	0.00311	0.00130
Percent Finer	88.4	79.7	75.4	65.0	50.3	39.9	32.9	28.6	25.1	15.6

LOCATION: LSP-SB-04 SAMPLE NO.: 114574 DEPTH: 1.0-3.0 ft.

Particle Diameter (mm)	0.05337	0.03836	0.02839	0.01847	0.01113	0.00812	0.00590	0.00426	0.00300	0.00130
Percent Finer	89.6	86.8	78.2	72.5	60.1	52.4	45.8	40.0	35.3	22.9

LOCATION: LSP-SB-07 SAMPLE NO.: 114575 DEPTH: 1.0-3.0 ft.

Particle Diameter (mm)	0.05107	0.03812	0.02747	0.01847	0.01149	0.00856	0.00615	0.00442	0.00314	0.00132
Percent Finer	90.4	81.5	78.0	66.5	47.9	34.6	30.1	26.6	23.0	13.3

TABLE D-17D
(Continued)

LOCATION: 1934 SAMPLE NO.: 111184 DEPTH: 4.0-6.0 ft.

Particle Diameter (mm)	0.04803	0.03524	0.02562	0.01902	0.01221	0.00877	0.00629	0.00451	0.00315	0.00139
Percent Finer	89.9	84.9	79.9	51.6	27.5	23.3	19.2	15.8	13.3	7.5

LOCATION: 1937 SAMPLE NO.: 111141 DEPTH: 2.0-4.0 ft.

Particle Diameter (mm)	0.03484	0.02558	0.01680	0.01052	0.00782	0.00574	0.00422	0.00300	0.00133
Percent Finer	89.1	83.0	76.8	60.9	50.3	40.6	31.8	23.8	5.3

LOCATION: 1940 SAMPLE NO.: 114672 DEPTH: 4.0-6.0 ft.

Particle Diameter (mm)	0.03780	0.02754	0.01897	0.01227	0.00884	0.00627	0.00441	0.00304	0.00131
Percent Finer	87.7	81.7	61.8	30.9	23.9	19.9	16.9	13.0	6.0

LOCATION: 1956 SAMPLE NO.: 114862 DEPTH: 7.0-9.0 ft.

Particle Diameter (mm)	0.05013	0.03734	0.02844	0.02116	0.01272	0.00895	0.00640	0.00449	0.00316	0.00136
Percent Finer	94.2	85.0	70.2	29.6	17.6	14.8	12.0	11.1	9.2	7.4

LOCATION: 1957 SAMPLE NO.: 114855 DEPTH: 2.0-4.0 ft.

Particle Diameter (mm)	0.05361	0.03929	0.02841	0.01874	0.01146	0.00819	0.00591	0.00423	0.00300	0.00131
Percent Finer	92.1	85.1	80.1	70.1	56.1	49.1	43.1	36.1	32.0	24.0

TABLE D-17D
(Continued)

LOCATION: 1958 SAMPLE NO.: 114828 DEPTH: 5.0-6.0 ft.

Particle Diameter (mm)	0.03520	0.02564	0.01697	0.01075	0.00806	0.00583	0.00415	0.00296	0.00131
Percent Finer	96.1	91.3	82.7	59.6	44.2	37.5	31.7	26.0	14.4

LOCATION: 1959 SAMPLE NO.: 114820 DEPTH: 11.0-13.5 ft.

Particle Diameter (mm)	0.05696	0.04178	0.03057	0.02014	0.01212	0.00874	0.00620	0.00436	0.00308	0.00133
Percent Finer	77.6	69.7	61.7	49.8	34.8	27.9	23.9	20.9	18.9	14.9

LOCATION: 1961 SAMPLE NO.: 114748 DEPTH: 7.0-9.0 ft.

Particle Diameter (mm)	0.05919	0.04928	0.03619	0.02304	0.01314	0.00929	0.00657	0.00465	0.00322	0.00136
Percent Finer	76.7	24.1	9.9	6.6	6.6	6.6	6.6	6.6	6.6	6.6

LOCATION: 1961 SAMPLE NO.: 114749 DEPTH: 10.0-12.0 ft.

Particle Diameter (mm)	0.04797	0.03534	0.02612	0.01730	0.01098	0.00811	0.00584	0.00420	0.00296	0.00128
Percent Finer	95.1	88.0	81.0	72.2	51.9	40.5	36.1	31.7	26.4	19.4

LOCATION: 1963 SAMPLE NO.: 114793 DEPTH: 4.0-6.0 ft.

Particle Diameter (mm)	0.06006	0.04785	0.03607	0.02300	0.01330	0.00929	0.00657	0.00466	0.00324	0.00137
Percent Finer	56.7	27.5	8.6	6.0	5.2	5.2	5.2	4.3	3.4	3.4

TABLE D-17D
(Continued)

LOCATION: 1963 SAMPLE NO.: 114794 DEPTH: 12.0-15.5 ft.

Particle Diameter (mm)	0.04612	0.03335	0.02493	0.01871	0.01168	0.00838	0.00595	0.00428	0.00298	0.00127
Percent Finer	97.5	94.0	85.5	53.0	31.6	27.4	25.6	21.4	19.7	16.2

LOCATION: 2935 SAMPLE NO.: 110790 DEPTH: 2.0-4.0 ft.

Particle Diameter (mm)	0.05008	0.03706	0.02666	0.01751	0.01067	0.00776	0.00563	0.00405	0.00285	0.00121
Percent Finer	72.4	65.3	62.1	55.7	44.6	35.8	30.2	26.3	22.3	14.3

LOCATION: 2935 SAMPLE NO.: 115327 DEPTH: 2.0-4.0 ft.

Particle Diameter (mm)	0.05719	0.04251	0.03049	0.02033	0.01235	0.00890	0.00636	0.00453	0.00316	0.00138
Percent Finer	49.9	41.5	38.7	28.1	16.9	12.7	10.5	8.4	7.0	4.2

LOCATION: 2936 SAMPLE NO.: 110943 DEPTH: 4.0-6.0 ft.

Particle Diameter (mm)	0.06315	0.04609	0.03301	0.02316	0.01356	0.00965	0.00674	0.00478	0.00332	0.00137
Percent Finer	50.1	43.0	39.4	9.8	5.4	3.6	3.6	2.7	1.8	0.0

001C04

FIGURE D-17A

LIME SLUDGE PONDS
UNCONFINED CONPRESSIVE STRENGTH RESULTS - ASTM D 1266
OPERABLE UNIT 2 REMEDIAL INVESTIGATION
FERNALD ENVIRONMENTAL MANAGEMENT PROJECT

LOCATION: 1934 SAMPLE NUMBER: 114540 DEPTH: 2.0-4.0 ft.
LENGTH: 5.5698 in. DIAMETER: 2.8633 in. WEIGHT: 1166.6 g
STRAIN AT FAILURE: 10.0% STRESS AT FAILURE: 30.3 pounds per square inch

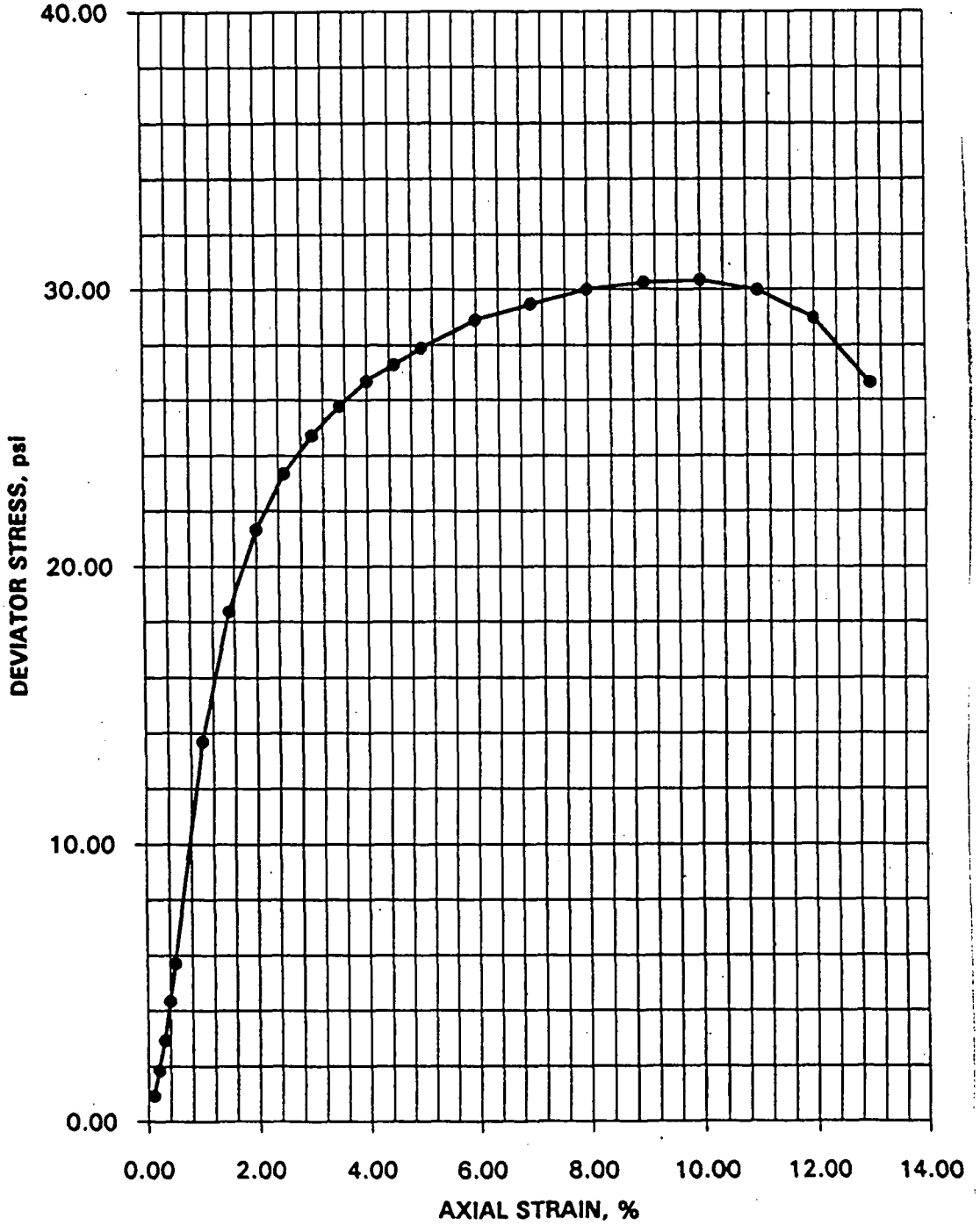

FIGURE D-17B

LOCATION: 1948 SAMPLE NUMBER: 114671 DEPTH: 2.0-4.0 ft.
LENGTH: 5.6267 in. DIAMETER: 2.8637 in. WEIGHT: 1207.15 g
STRAIN AT FAILURE: 5.0% STRESS AT FAILURE: 36.6 pounds per square inch

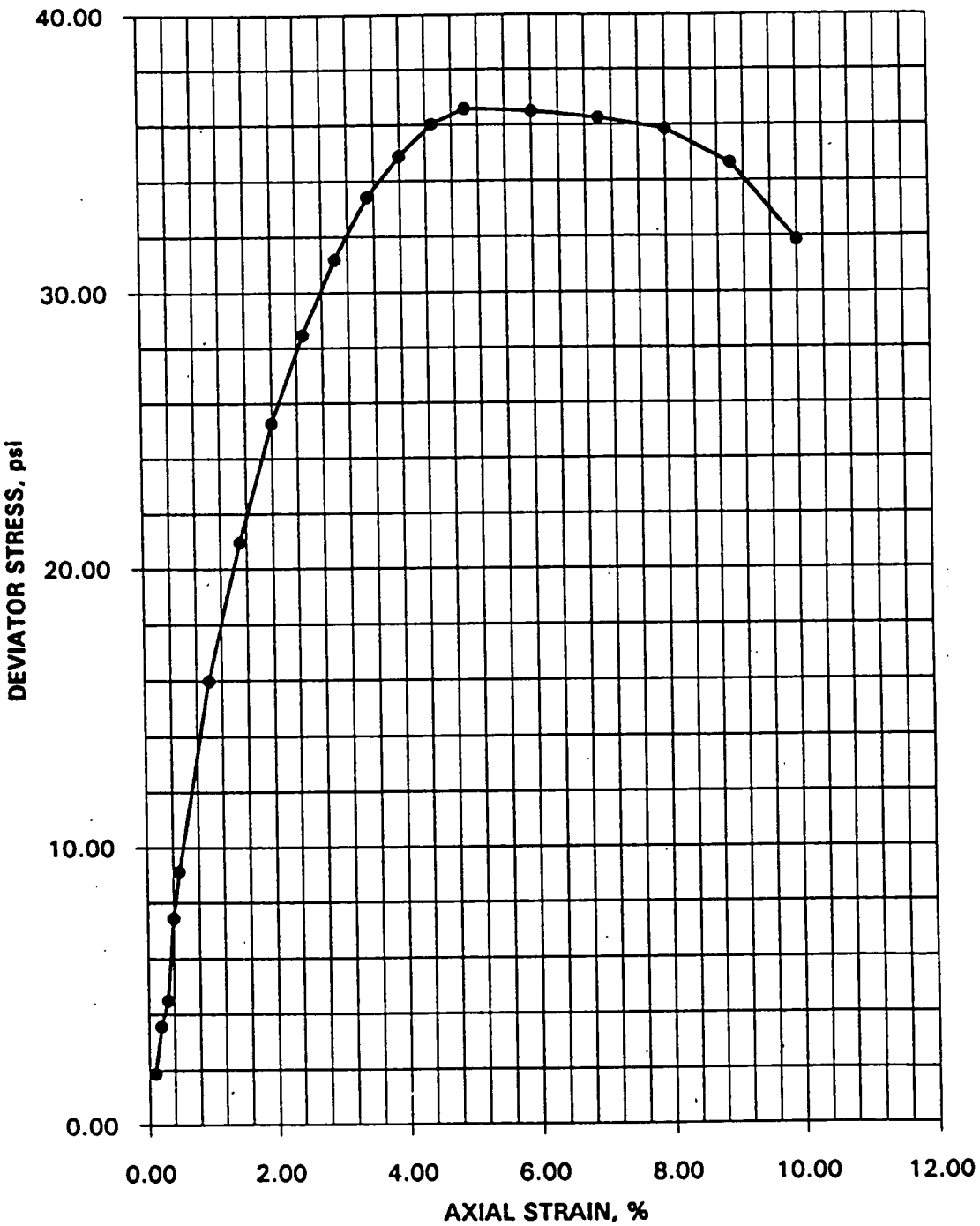

FIGURE D-17C

LOCATION: 2936 SAMPLE NUMBER: 110938 DEPTH: 2.0-4.0 ft.
LENGTH: 5.5587 in. DIAMETER: 2.8253 in. WEIGHT: 1250.8 g
STRAIN AT FAILURE: 10.0% STRESS AT FAILURE: 34.2 pounds per square inch

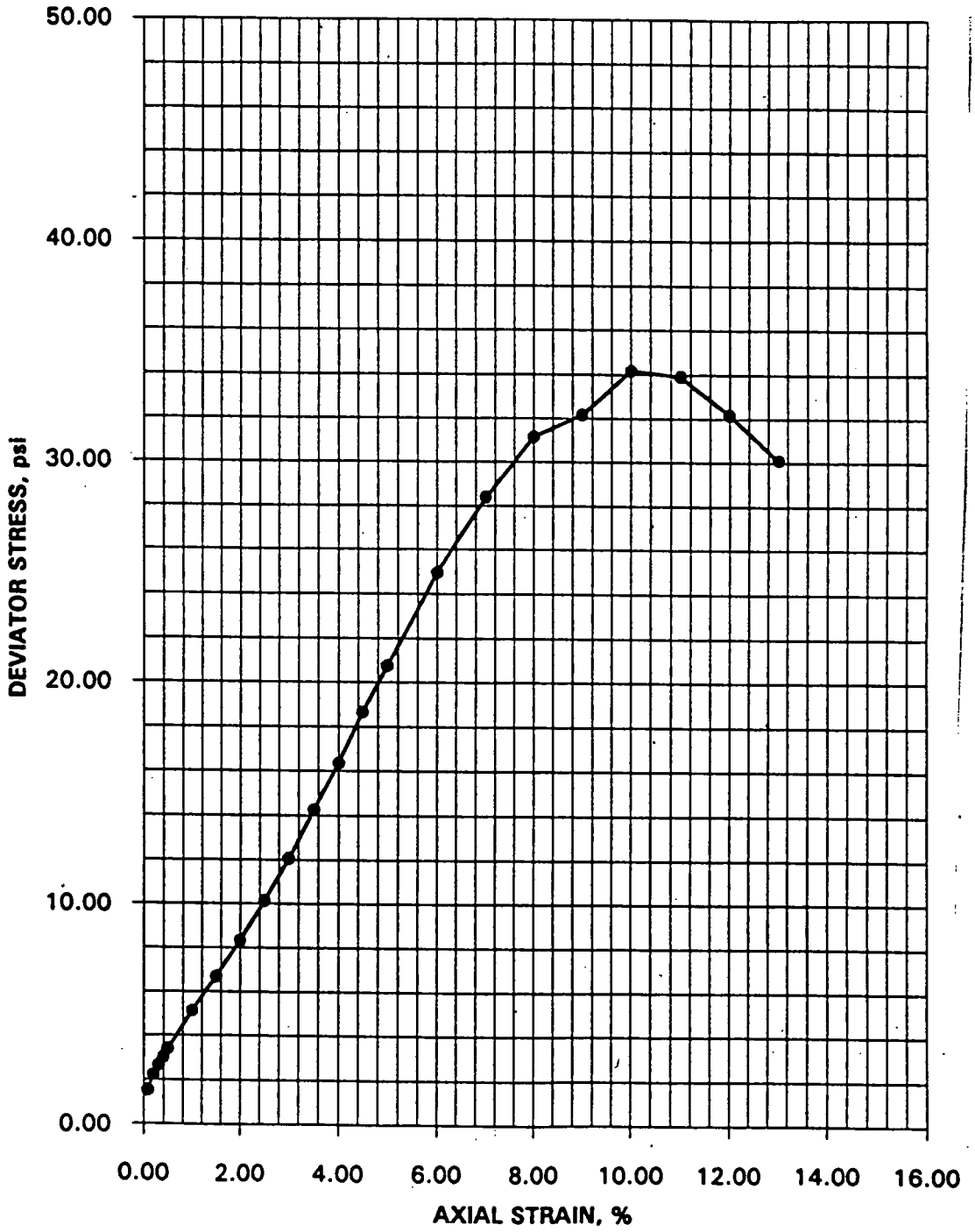

6508

TABLE D-18

TABLE D-18A

LIME SLUDGE PONDS
CIS GEOPHYSICAL ANALYSIS
TOTAL MAGNETIC INTENSITY READINGS
OPERABLE UNIT 2 REMEDIAL INVESTIGATION
FERNALD ENVIRONMENTAL MANAGEMENT PROJECT

State Planer Coordinates		
North (ft)	East (ft)	Reading (Gammas)
480577.71	1379544.30	55602.0
480552.73	1379543.61	55784.0
480527.73	1379542.23	55852.0
480502.74	1379542.23	55754.0
480477.75	1379541.56	55604.0
480452.76	1379540.88	55314.0
480477.07	1379566.55	55783.0
480502.06	1379567.22	55838.0
480527.05	1379567.91	55860.0
480552.04	1379568.59	55834.0
480577.03	1379569.28	55811.0
480576.35	1379594.28	55853.0
480551.36	1379593.59	55842.0
480526.37	1379592.91	55849.0
480501.38	1379592.22	55838.0
480476.39	1379591.55	55805.0
480451.39	1379590.86	55680.0
480450.71	1379615.84	55649.0
480475.70	1379616.53	55792.0
480500.69	1379617.20	55820.0
480525.68	1379617.89	55833.0
480550.68	1379618.58	55835.0
480575.66	1379619.27	55842.0
480574.98	1379644.27	55818.0
480549.99	1379643.58	55811.0
480525.00	1379642.89	55806.0

TABLE D-18A
(Continued)

State Planer Coordinates		
North (ft)	East (ft)	Reading (Gammas)
480500.01	1379642.20	55797.0
480475.02	1379641.53	56764.0
480450.03	1379640.84	55638.0
480449.34	1379665.83	55614.0
480474.34	1379666.52	56734.0
480499.32	1379667.19	55757.0
480524.32	1379667.88	55765.0
480549.31	1379668.56	55769.0
480574.30	1379669.25	55767.0
480573.61	1379694.23	55718.0
480548.63	1379693.55	55719.0
480523.63	1379692.86	55716.0
480498.64	1379692.17	55711.0
480473.65	1379691.50	55766.0
480448.66	1379690.81	55611.0
480447.98	1379715.81	55571.0
480472.97	1379716.50	55638.0
480497.96	1379717.17	55647.0
480522.95	1379717.86	55650.0
480547.94	1379718.55	55648.0
480572.93	1379719.23	55640.0
480572.25	1379744.22	55545.0
480547.26	1379743.53	55554.0
480522.27	1379742.84	55556.0
480497.27	1379742.16	55559.0
480472.29	1379741.48	55544.0
480447.29	1379740.80	55460.0
480446.61	1379765.80	55339.0
480471.60	1379766.48	55418.0

TABLE D-18A
(Continued)

State Planer Coordinates		
North (ft)	East (ft)	Reading (Gammas)
480496.59	1379767.16	55406.0
480521.58	1379767.84	55423.0
480546.57	1379768.53	55497.0
480571.56	1379769.22	55646.0
480570.88	1379794.20	55395.0
480545.89	1379793.52	55208.0
480520.89	1379792.83	55053.0
480495.90	1379792.14	54947.0
480470.91	1379791.47	55197.0

TABLE D-18B

LIME SLUDGE PONDS
CIS GEOPHYSICAL ANALYSIS
EM 31 READINGS
OPERABLE UNIT 2 REMEDIAL INVESTIGATION
FERNALD ENVIRONMENTAL MANAGEMENT PROJECT

State Planer Coordinates			
North (ft)	East (ft)	Horizontal Dipole (mmhos/m)	Horizontal Dipole (mmhos/m)
480577.71	1379544.30	22.00	32.00
480652.69	1379546.34	1.0E30	1.0E30
480702.67	1379547.72	1.0E30	1.0E30
480575.66	1379619.27	20.00	34.00
480550.68	1379618.58	16.00	26.00
480525.68	1379617.89	16.00	23.00
480500.69	1379617.20	16.00	24.00
480475.70	1379616.53	18.00	28.00
480477.07	1379566.55	22.00	40.00
480502.06	1379567.22	19.00	30.00
480527.05	1379567.91	16.00	28.00
480552.04	1379568.59	18.00	30.00
480549.31	1379668.56	18.00	28.00
480524.32	1379667.88	16.00	24.00
480499.32	1379667.19	16.00	23.00
480474.34	1379666.52	16.00	27.50
480403.36	1379664.56	20.00	46.00
480547.94	1379718.55	18.00	29.00
480522.95	1379717.86	16.00	24.00
480497.96	1379717.17	15.00	23.00
480472.97	1379716.50	16.00	27.00
480471.60	1379766.48	19.00	32.00
480496.59	1379767.16	16.00	25.00
480521.58	1379767.84	17.00	28.00
480546.57	1379768.53	21.00	32.00
480402.10	1379564.48	28.00	46.00

TABLE D-18B
(Continued)

State Planer Coordinates			
North (ft)	East (ft)	Horizontal Dipole (mmhos/m)	Horizontal Dipole (mmhos/m)
480352.12	1379563.13	21.00	34.00
480302.13	1379561.75	24.00	37.00
480300.77	1379611.73	22.00	33.00
480350.75	1379613.11	22.00	34.00
480400.73	1379614.47	26.00	51.00
480399.36	1379664.45	24.00	46.00
480349.38	1379663.09	24.00	36.00
480299.40	1379661.72	22.00	34.00
480298.03	1379711.70	24.00	37.00
480348.02	1379713.08	22.00	35.00
480398.00	1379714.44	25.00	47.00

FIGURE D-18A

LIME SLUDGE PONDS
CIS GEOPHYSICAL ANALYSIS
TOTAL MAGNETIC INTENSITY CONTOURS
OPERABLE UNIT 2 REMEDIAL INVESTIGATION
FERNALD ENVIRONMENTAL MANAGEMENT PROJECT

(Contour interval 100 Gammas)

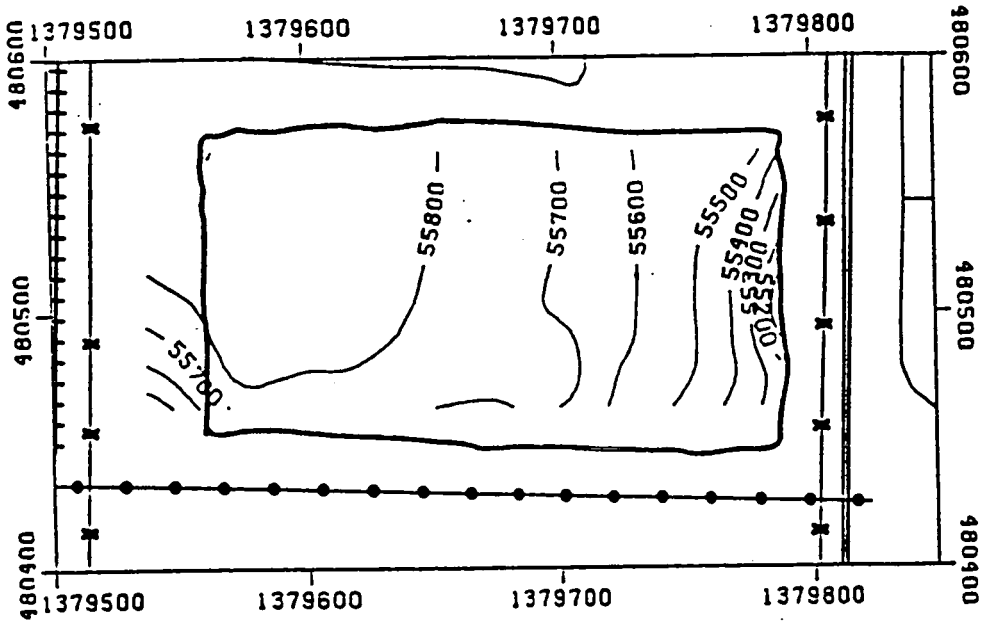

Legend

- Approximate Boundary of South Lime Sludge Pond
- Fence
- Railroad Tracks
- Pipeline
- Hydrology

STATE PLANE COORDINATE SYSTEM

OHIO SOUTH ZONE

1 INCH = 75 FEET

PREPARED BY

ROY F. WESTON, INC. 9/1/87

FIGURE D-18B

LIME SLUDGE PONDS
CIS GEOPHYSICAL ANALYSIS
EM 31 HORIZONTAL DIPOLE APPARENT CONDUCTIVITY MAP
OPERABLE UNIT 2 REMEDIAL INVESTIGATION
FERNALD ENVIRONMENTAL MANAGEMENT PROJECT

(Contour interval 2.0 mmhos/m)

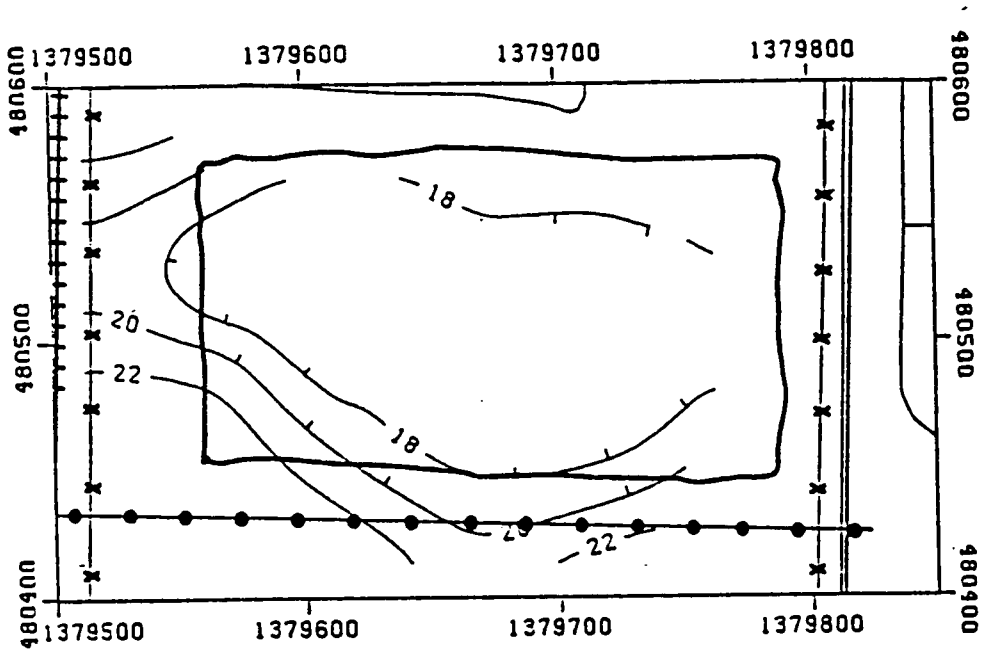

Legend

- Approximate Boundary of South Lime Sludge Pond
- Fence
- Railroad Tracks
- Pipeline
- Hydrology

STATE PLANE COORDINATE SYSTEM

OHIO SOUTH ZONE

1 INCH = 75 FEET

PREPARED BY

ROY F. WESTON, INC. 9/1/87

FIGURE D-18C

LIME SLUDGE PONDS
CIS GEOPHYSICAL ANALYSIS
EM 31 VERTICAL DIPOLE APPARENT CONDUCTIVITY MAP
OPERABLE UNIT 2 REMEDIAL INVESTIGATION
FERNALD ENVIRONMENTAL MANAGEMENT PROJECT

(Contour interval 5.0 mmhos/m)

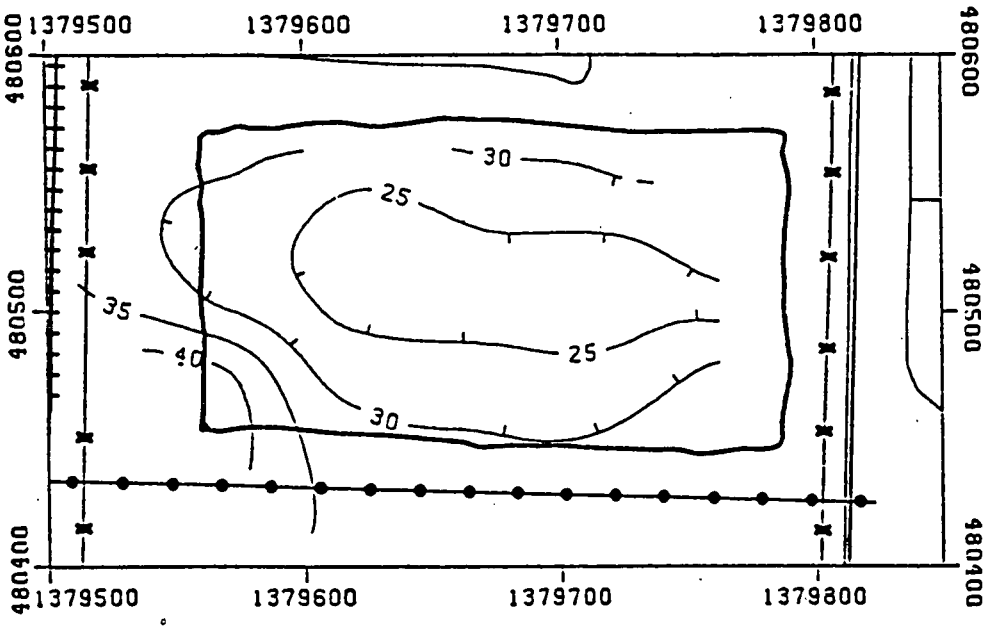

Legend

- Approximate Pit Boundary
- Fence
- Railroad Tracks
- Pipeline (Buried)
- Hydrology

STATE PLANE COORDINATE SYSTEM

OHIO SOUTH ZONE

1 INCH = 75 FEET

PREPARED BY

ROY F. WESTON, INC. 9/1/87

001015

FIGURE D-18D

LIME SLUDGE PONDS
CIS GEOPHYSICAL ANALYSIS
GROUND PENETRATING RADAR RESULTS
OPERABLE UNIT 2 REMEDIAL INVESTIGATION
FERNALD ENVIRONMENTAL MANAGEMENT PROJECT

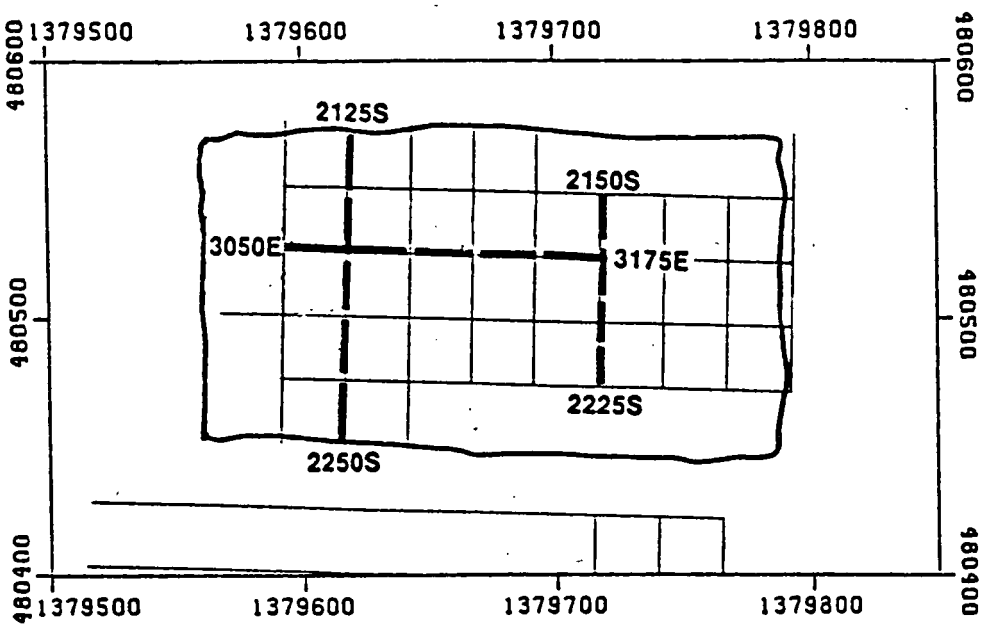

Legend

- Low Density of Buried Objects
- Moderate Density of Buried Objects
- High Density of Buried Objects
- Approximate South Lime Sludge Pond Boundary
- GPR Horizontal Profile

Scale: 1 Inch = 75 Feet

TABLE D-19

PROJECT NUMBER: 602 3.2	PROJECT NAME: CRU2 RI PHASE I FIELD INVESTIGATION	
BORING NUMBER: 1039	COORDINATES: NORTH 480729.12 EAST 1379659.11	DATE:08-APR-88
GROUND ELEVATION: 577.4	GWL: Depth Date/Time	DATE STARTED: 08-APR-88
ENGINEER/GEOLOGIST: M. SLUSARSKI	Depth Date/Time	DATE COMPLETE: 09-APR-88
DRILLING METHOD: CABLE-TOOL DRILLING		

DEPTH	SAMPLE	DATE	TIME	BLOWS ON SAMPLE	RECOVERY INCHES		USCS SYMBOL	TSF	REMARKS
1.5	008431	04/08/88	09:21	3 8 10	12	VERY STIFF, BROWN (10YR, 3/2) CLAY, ROOTLETS, DRY.	CL	2.5	PID=0 ppm BΓ=120 cpm
3.0	008432	04/08/88	09:24	5 7 8	14	STIFF, GREY/BROWN, (10YR, 4/1) CLAY, DRY.	CL	2.0	PID=0 ppm BΓ=120 cpm
4.5	008433	04/08/88	09:33	5 9 12	8	VERY STIFF, OLIVE/BROWN (5Y, 4/3) MOTTLED CLAY, DRY.	CL	3.5	PID=0 ppm BΓ=100 cpm
6.0	008434	04/08/88	09:38	11 13 15	10	VERY STIFF, GREY/BROWN (10YR, 5/1) MOTTLED, CLAY, DRY.	CL	2.5	PID=0 ppm BΓ=100 cpm
7.5	008435	04/08/88	09:41	15 15 18	12	VERY STIFF, GREY/BROWN (10YR, 5/1) MOTTLED, CLAY, DAMP.	CL	2.0	PID=0 ppm BΓ=100 cpm
9.0	008436	04/08/88	09:46	11 14 14	12	STIFF, GREY (2.5Y, 6/2) CLAY, DAMP.	CL	1.5	PID=0 ppm BΓ=100 cpm
13.5	008439	04/08/88	14:21	4 7 11	14	MEDIUM STIFF, GREY (5Y, 5/1) SILTY CLAY, DAMP.	CL	1.0	PID=0 ppm BΓ=100 cpm
15.0	008440	04/08/88	14:26	10 12 19	12	MEDIUM STIFF, GREY (5Y, 5/1) SILTY CLAY, DAMP.	CL	1.0	PID=0 ppm BΓ=100 cpm
16.5	008441	04/08/88	14:30	17 20 17	14	MEDIUM STIFF, GREY (5Y, 5/1) SILTY CLAY, SOME FINE SAND, DAMP.	CL	1.0	PID=0 ppm BΓ=80 cpm
18.0	008442	04/08/88	15:05	2 5 13	14	MEDIUM STIFF, GREY (5Y, 5/1) SILTY CLAY, SOME FINE SAND, DAMP.	CL	1.5	PID=0 ppm BΓ=80 cpm
19.5	008443	04/08/88	00:00	6 12 15	14	MEDIUM DENSE, GREY (5Y, 4/1) WELL GRADED, GRAVELLY SAND, WET.	SW	N/A	PID=0 ppm BΓ=80 cpm
21.0	008444	04/08/88	15:11	10 16 18	14	DENSE, GREY (5Y, 4/1) WELL GRADED, GRAVELLY SAND, WET.	SW	N/A	PID=0 ppm BΓ=80 cpm
22.5	008445	04/08/88	15:13	14 20 21	14	DENSE, GREY (5Y, 4/1) WELL GRADED, GRAVELLY SAND, WET.	SW	N/A	PID=0 ppm BΓ=80 cpm

NOTES:

SAA = Same as Above
PID = Photoionization Detector
N/A = Not Applicable

PROJECT NUMBER: 602 3.2	PROJECT NAME: CRU2 RI PHASE I FIELD INVESTIGATION	
BORING NUMBER: 1039	COORDINATES: NORTH 480729.12 EAST 1379659.11	DATE:08-APR-88.
GROUND ELEVATION: 577.4	GWL: Depth Date/Time	DATE STARTED: 08-APR-88
ENGINEER/GEOLOGIST: M. SLUSARSKI	Depth Date/Time	DATE COMPLETE: 09-APR-88
DRILLING METHOD: CABLE-TOOL DRILLING		

DEPTH	SAMPLE	DATE TIME	BLOWS ON SAMPLE	RECOVERY INCHES		USCS	SYMBOL	TSF	REMARKS
22.5 24.0	008446 04/08/88 16:51		10 8 14	14	MEDIUM DENSE, GREY (5Y, 4/1) CLAYEY GRAVEL, GRAVEL-SAND-CLAY MIXTURE, WET. VERY STIFF, GREY (5Y, 4/1) CLAY, SOME FINE GRAVEL AND SILT, DRY.	GC CL		N/A 2.5	PID=0 ppm BΓ=80 cpm
24.0 25.5	008447 04/08/88 17:12		7 10 11	8	VERY STIFF, GREY (5Y, 4/1) CLAY, SOME FINE GRAVEL AND SILT, DRY.	CL		2.5	PID=0 ppm BΓ=80 cpm

NOTES:

SAA = Same as Above
PID = Photoionization Detector
N/A = Not Applicable

001018

PROJECT NUMBER: 602 3.2	PROJECT NAME: CRU2 RI PHASE I FIELD INVESTIGATION	
BORING NUMBER: 1041	COORDINATES: NORTH 480550.15 EAST 1379798.68	DATE:10-APR-88
GROUND ELEVATION: 581.3	GWL: Depth Date/Time	DATE STARTED: 10-APR-88
ENGINEER/GEOLOGIST: M. SLUSARSKI	Depth Date/Time	DATE COMPLETE: 11-APR-88
DRILLING METHOD: CABLE-TOOL DRILLING		

DEPTH	SAMPLE / DATE / TIME	BLOWS ON SAMPLE	RECOVERY INCHES		USCS SYMBOL	TSF	REMARKS
1.5	008448 04/10/88 14:09	2 4 7	12	STIFF YELLOW-BROWN CLAY (10YR, 4/3) SOME FINE GRAVEL, ROOTLETS, DRY.	CL	2.0	PID=0 ppm BΓ=140 cpm
1.5 3.0	008449 04/10/88 14:12	3 5 17	12	STIFF YELLOW-BROWN CLAY (10YR, 4/3) SOME FINE GRAVEL, ROOTLETS, DRY.	CL	2.0	PID=0 ppm BΓ=140 cpm
3.0 4.5	008450 04/10/88 00:00	18 20 18	18	VERY STIFF, YELLOW-BROWN (5Y, 4/4) CLAY, SOME FINE GRAVEL, DRY. STIFF GREY-BROWN, MOTTLED (10YR, 3/1) CLAY, SOME FINE GRAVEL, DRY.	CL CL	2.5 2.0	PID=0 ppm BΓ=120 cpm
4.5 6.0	008451 04/10/88 14:21	24 25 30	18	VERY STIFF YELLOW-BROWN-GREY, MOTTLED (10YR, 4/4) CLAY, DRY.	CL	3.0	PID=0 ppm BΓ=120 cpm
6.0 7.5	008452 04/10/88 14:26	24 26 24	14	STIFF GREY-YELLOW BROWN, MOTTLED, (10YR, 5/1) CLAY, DRY.	CL	2.0	PID=0 ppm BΓ=120 cpm
7.5 9.0	008453 04/10/88 14:28	25 28 27	8	STIFF GREY-YELLOW BROWN, MOTTLED, (10YR, 5/1) CLAY, DRY.	CL	2.0	PID=0 ppm BΓ=120 cpm
12.0 13.5	008456 04/11/88 09:40	5 6 8	12	STIFF, GREY (5Y, 5/1) CLAY, SOME SILT, DAMP.	CL	2.0	PID=0 ppm BΓ=100 cpm
13.5 15.0	008457 04/11/88 09:44	5 5 7	12	STIFF, GREY (5Y, 5/1) CLAY, SOME SILT, DAMP.	CL	2.0	PID=0 ppm BΓ=100 cpm
15.0 16.5	008458 04/11/88 09:48	3 4 4	12	STIFF, GREY (5Y, 5/1) CLAY, SOME SILT, DAMP.	CL	2.0	PID=0 ppm BΓ=100 cpm
16.5 18.0	008459 04/11/88 09:51	4 4 6	12	STIFF, GREY (5Y, 5/1) CLAY, SOME SILT, DAMP.	CL	2.0	PID=0 ppm BΓ=100 cpm
18.0 19.5	008460 04/11/88 11:00	1 5 6	14	STIFF, GREY (5Y, 5/1) CLAY, SOME SILT, DAMP.	CL	2.0	PID=0 ppm BΓ=100 cpm
19.5 21.0	008461 04/11/88 11:02	3 4 4	18	STIFF, GREY (5Y, 5/1) CLAY, SOME SILT, DAMP.	CL	2.0	PID=0 ppm BΓ=100 cpm
21.0 22.5	008462 04/11/88 11:15	2 2 4	18	STIFF, GREY (5Y, 5/1) CLAY, SOME SILT, DAMP.	CL	2.0	PID=0 ppm BΓ=100 cpm

NOTES:

SAA = Same as Above
PID = Photoionization Detector
N/A = Not Applicable

PROJECT NUMBER: 602 3.7	PROJECT NAME: CRU2 PHASE I FIELD INVESTIGATION	
BORING NUMBER: 1134	COORDINATES: NORTH 480745.16 EAST 1379849.31	DATE:03-MAY-89
GROUND ELEVATION: 579.8	GWL: Depth Date/Time	DATE STARTED: 03-MAY-89
ENGINEER/GEOLOGIST: L. SINFIELD	Depth Date/Time	DATE COMPLETE: 04-MAY-89
DRILLING METHOD: AUGER		

DEPTH	SAMPLE / DATE TIME	BLOWS ON SAMPLE	RECOVERY INCHES		USCS SYMBOL	TSF	REMARKS
.5	015627 05/03/89 15:25	7 5 6	12	DARK YELLOWISH BROWN (10 YR, 4/4) LEAN CLAY, CL-HARD, ABUNDANT ROOTS , DRY	CL	4.5	PID=0 ppm α=0 ppm BΓ=160-200 cpm
.5 1.0	015628 05/03/89 15:25	7 5 6	12	DARK YELLOWISH BROWN (10 YR, 4/4) LEAN CLAY, CL-HARD, ABUNDENT ROOTS, DRY	CL	4.5	PID=0 ppm α=0 ppm BΓ=160-200 cpm
1.0 1.5	015629 05/03/89 00:00	7 5 6	N/A	NO RECOVERY, NO SAMPLE TAKEN	N/A	N/A	
1.5 2.0	015630 05/03/89 15:30	7 5 10	6	VERY STIFF, LIGHT BROWNISH GRAY (10 YR, 6/2) CLAY, CL-DRY, MASSIVE, MOTTLED, RARE ROOTS, LEAN WITH SOME SILT.	CL	2.1-2	PID=0 ppm α=0 ppm BΓ=120-160 cpm
2.0 2.5	015631 05/03/89 00:00	7 5 10	N/A	NO RECOVERY, NO SAMPLE TAKEN	N/A	N/A	
2.5 3.0	015632 05/03/89 00:00	7 5 10	N/A	NO RECOVERY, NO SAMPLE TAKEN	N/A	N/A	
3.0 3.5	015633 05/03/89 00:00	7 9 10	N/A	NO RECOVERY, NO SAMPLE TAKEN	N/A	N/A	
3.5 4.0	015634 05/03/89 00:00	7 9 10	N/A	NO RECOVERY, NO SAMPLE TAKEN	N/A	N/A	
4.0 4.5	015635 05/03/89 15:35	7 9 10	5	VERY STIFF TO HARD, DARK GRAYISH BROWN. (10 YR, 4/2) CLAY, CL-DRY, MOTTLED, MASSIVE, MEDIUM PLASTIC	CL	2.6-4	PID=0 ppm α=0 ppm BΓ=120-140 cpm
4.5 5.0	015636 05/03/89 15:40	4 7 3	3	STIFF, DARK GRAYISH BROWN (10 YR, 4/2) CLAY, CL-DRY, MOTTLED, MASSIVE, MEDIUM PLASTIC	CL	1.4-1	PID=0 ppm α=0 ppm BΓ=140-160 cpm
5.0 5.5	015637 05/03/89 00:00	4 7 3	N/A	NO RECOVERY, NO SAMPLE TAKEN	N/A	N/A	
5.5 6.0	015638 05/03/89 00:00	4 7 3	N/A	NO RECOVERY, NO SAMPLE TAKEN	N/A	N/A	
6.0 6.5	015639 05/03/89 16:05	3 6 7	6	STIFF, DARK YELLOWISH BROWN (10 YR, 3/4), MEDIUM PLASTIC LEAN CLAY, - DRY, MASSIVE, RARE GRAVEL.	CL	1.2	PID=0 ppm α=0 ppm BΓ=140-180 cpm

NOTES:

SAA = Same as Above
PID = Photoionization Detector
N/A = Not Applicable

PROJECT NUMBER: 602 3.7	PROJECT NAME: CRU2 PHASE I FIELD INVESTIGATION	
BORING NUMBER: 1134	COORDINATES: NORTH 480745.16 EAST 1379849.31	DATE:03-MAY-89
GROUND ELEVATION: 579.8	GWL: Depth Date/Time	DATE STARTED: 03-MAY-89
ENGINEER/GEOLOGIST: L. SINFIELD	Depth Date/Time	DATE COMPLETE: 04-MAY-89
DRILLING METHOD: AUGER		

DEPTH	SAMPLE	DATE TIME	BLOWS ON SAMPLE	RECOVERY INCHES		USCS SYMBOL	TSF	REMARKS
6.5 7.0	015640	05/03/89 00:00	3 6 7	N/A	NO RECOVERY, NO SAMPLE TAKEN	N/A	N/A	
7.0 7.5	015641	05/03/89 00:00	3 6 7	N/A	NO RECOVERY, NO SAMPLE TAKEN	N/A	N/A	
7.5 8.0	015642	05/03/89 16:10	5 10 15	15	SOFT AT TOP TO HARD AT BASE, MOTTLED GRAY (10 YR 6/1) TO BROWNISH YELLOW (10 YR 6/6) CLAY, MED PLASTIC, DRY, MASSIVE	CL	>4.5	PID=0 ppm α=0 ppm βΓ=180-220 cpm
8.0 8.5	015643	05/03/89 16:10	5 10 15	15	SOFT AT TOP TO HARD AT BASE, MOTTLED GRAY (10 YR 6/1) TO BROWNISH YELLOW (10 YR 6/6) CLAY, MED PLASTIC, DRY, MASSIVE	CL	>4.5	PID=0 ppm α=0 ppm βΓ=180-220 cpm
8.5 9.0	015644	05/03/89 16:10	5 10 15	15	SOFT AT TOP TO HARD AT BASE, MOTTLED GRAY (10 YR 6/1) TO BROWNISH YELLOW (10 YR 6/6) CLAY, MED PLASTIC, DRY, MASSIVE	CL	>4.5	PID=0 ppm α=0 ppm βΓ=180-220 cpm
9.0 9.5	015645	05/03/89 16:15	10 9 9	6	VERY STIFF, SOFT AT TOP TO HARD AT BASE, MOTTLED GRAY (10 YR 6/1) TO BROWNISH YELLOW (10 YR 6/6) CLAY, MED PLASTIC, DRY, MASSIVE	CL	2.5-3	PID=0 ppm α=0 ppm βΓ=180-120 cpm
9.5 10.0	015646	05/03/89 00:00	10 9 9	N/A	NO RECOVERY, NO SAMPLE TAKEN	N/A	N/A	
10.0 10.5	015647	05/03/89 00:00	10 9 9	N/A	NO RECOVERY, NO SAMPLE TAKEN	N/A	N/A	
10.5 11.0	015648	05/03/89 16:40	4 6 9	18	SATURATED, SAND, LOOSE BROWNISH YELLOW (10 YR 6/6), MASSIVE FINE SAND	SM	N/A	PID=0 ppm α=0 ppm βΓ=160-200 cpm
11.0 11.5	050649	05/03/89 16:40	4 6 9	18	SATURATED, SAND, LOOSE BROWNISH YELLOW (10 YR 6/6), MASSIVE FINE SAND	SM	N/A	PID=0 ppm α=0 ppm βΓ=160-200 cpm
11.5 12.0	050650	05/03/89 16:40	4 6 9	18	SATURATED, SAND, LOOSE BROWNISH YELLOW (10 YR 6/6), MASSIVE FINE SAND	SM	N/A	PID=0 ppm α=0 ppm βΓ=160-200 cpm
14.0 14.5	055171	05/08/89 15:40	6	18	SATURATED, FINE SAND, LOOSE, BROWNISH YELLOW (10 YR 6/6), MASSIVE	SM	N/A	PID=0 ppm α=0 ppm βΓ=120-160 cpm
14.5 15.0	055172	05/08/89 15:40	9	18	SATURATED, FINE SAND, LOOSE, BROWNISH YELLOW (10 YR 6/6), MASSIVE	SM	N/A	PID=0 ppm α=0 ppm βΓ=120-160 cpm

NOTES:

SAA = Same as Above
PID = Photoionization Detector
N/A = Not Applicable

PROJECT NUMBER: 602 3.7	PROJECT NAME: CRU2 PHASE I FIELD INVESTIGATION	
BORING NUMBER: 1134	COORDINATES: NORTH 480745.16 EAST 1379849.31	DATE:03-MAY-89
GROUND ELEVATION: 579.8	GWL: Depth Date/Time	DATE STARTED: 03-MAY-89
ENGINEER/GEOLOGIST: L. SINFIELD	Depth Date/Time	DATE COMPLETE: 04-MAY-89
DRILLING METHOD: AUGER		

DEPTH	SAMPLE	DATE	TIME	BLOWS ON	SAMPLE	RECOVERY	INCHES		USCS	SYMBOL	TSF	REMARKS
15.0 15.5	050657	05/04/89	09:45	6		18		SATURATED, SAND, LOOSE BROWNISH YELLOW (10 YR 6/6) MASSIVE FINE SAND	SM		N/A	PID=0 ppm α=0 ppm BΓ=120-160 cpm
15.5 16.0	050658	05/04/89	09:45	9		18		SATURATED, SAND, LOOSE BROWNISH YELLOW (10 YR 6/6) MASSIVE FINE SAND	SM		N/A	PID=0 ppm α=0 ppm BΓ=120-160 cpm
16.0 16.5	050659	05/04/89	09:45	10		18		SAUTRATED, SAND, LOOSE BROWNISH YELLOW (10 YR 6/6) MASSIVE FINE SAND. CLAY, GRAY (10 YR 4/1) LEAN DRY, M PLASTIC, MASSIVE.	CL		3.5	PID=0 ppm α=0 ppm BΓ=120-160 cpm

NOTES:

SAA = Same as Above
PID = Photoionization Detector
N/A = Not Applicable

001C22

PROJECT NUMBER: 602 3.7	PROJECT NAME: CRU2 PHASE I FIELD INVESTIGATION	
BORING NUMBER: 1176	COORDINATES: NORTH 480705.79 EAST 1379852.67	DATE:08-MAY-89
GROUND ELEVATION: 579.7	GWL: Depth Date/Time	DATE STARTED: 08-MAY-89
ENGINEER/GEOLOGIST: C.GRUBE/L.ADAMS	Depth Date/Time	DATE COMPLETE: 08-MAY-89
DRILLING METHOD: AUGER		

DEPTH	SAMPLE	DATE TIME	BLOWS ON SAMPLE	RECOVERY INCHES		USCS SYMBOL	TSF	REMARKS
.5	016441	05/08/89 10:49	2	6	MEDIUM STIFF, DARK YELLOWISH BROWN (10 YR 4/4) CLAY, SOME GRASS AND ROOTS, MEDIUM PLASTICITY, MOIST.	CL	1.75	PID=0 ppm α=0 ppm BΓ=80-100 cpm
.5 1.0	016442	05/08/89 10:49	5	5	MEDIUM STIFF, DARK YELLOWISH BROWN (10 YR 4/4) CLAY, SOME GRASS AND ROOTS, MEDIUM PLASTICITY, MOIST.	CL	1.75	PID=0 ppm α=0 ppm BΓ=80-100 cpm
1.0 1.5	016443	05/08/89 10:49	7	N/A	NO RECOVERY	N/A	N/A	
1.5 2.0	016444	05/08/89 10:53	5	6	STIFF, YELLOWISH BROWN (10 YR 4/6) SILTY CLAY, SOME COARSE SAND, TRACE FINE GRAVEL, MOIST.	CL	1.75	PID=0 ppm α=0 ppm BΓ=60-80 cpm
2.0 2.5	016445	05/08/89 10:53	22	6	VERY STIFF, DARK YELLOWISH BROWN (10 YR 4/4) SILTY CLAY, TRACE COARSE SAND, LOW PLASTICITY, MOIST.	CL	3.25	PID=0 ppm α=0 ppm BΓ=60-80 cpm
2.5 3.0	016446	05/08/89 10:53	16	N/A	NO RECOVERY	N/A	N/A	
3.0 3.5	016447	05/08/89 11:00	16	6	VERY STIFF YELLOWISH BROWN (10 YR 5/4) SILTY CLAY, TRACE FINE GRAVEL AND SAND, LOW PLASTICITY, MOIST. VERY STIFF, DARK BROWN (10 YR 3/3) CLAY, LOW TO MEDIUM PLASTICITY, MOIST.	CL	3.5	PID=0 ppm α=0 ppm BΓ=60-70 cpm
3.5 4.0	016448	05/08/89 11:00	17	6	VERY STIFF YELLOWISH BROWN (10 YR 5/4) SILTY CLAY, TRACE FINE GRAVEL AND SAND, LOW PLASTICITY, MOIST. VERY STIFF, DARK BROWN (10 YR 3/3) CLAY, LOW TO MEDIUM PLASTICITY, MOIST.	CL	2.0	PID=0 ppm α=0 ppm BΓ=60-70 cpm
4.0 4.5	016449	05/08/89 11:00	21	N/A	NO RECOVERY	N/A	N/A	
4.5 5.0	016450	05/08/89 13:10	17	6	STIFF, DARK BROWN (10 YR 3/3) CLAY, LOW TO MEDIUM PLASTICITY, MOIST.	CL	1.25	PID=0 ppm α=0 ppm BΓ=80-100 cpm
5.0 5.5	016451	05/08/89 13:10	16	6	STIFF, YELLOWISH BROWN (10 YR 5/4) SILTY CLAY, TRACE SAND, MEDIUM PLASTICITY, MOIST.	CL	1.75	PID=0 ppm α=0 ppm BΓ=80-100 cpm
5.5 6.0	016452	05/08/89 13:10	15	5	STIFF, YELLOWISH BROWN (10 YR 5/4) SILTY CLAY, TRACE SAND, MEDIUM PLASTICITY, MOIST.	CL	2.0	PID=0 ppm α=0 ppm BΓ=80-100 cpm
6.0 6.5	016453	05/08/89 13:17	12	6	STIFF, YELLOWISH BROWN (10 YR 5/4) SILTY CLAY, TRACE SAND, MEDIUM PLASTICITY, VERY MOIST TO WET.	CL	1.0	PID=0 ppm α=0 ppm BΓ=50-60 cpm

NOTES:

SAA = Same as Above
PID = Photoionization Detector
N/A = Not Applicable

PROJECT NUMBER: 602 3.7	PROJECT NAME: CRU2 PHASE I FIELD INVESTIGATION	
BORING NUMBER: 1176	COORDINATES: NORTH 480705.79 EAST 1379852.67	DATE:08-MAY-89
GROUND ELEVATION: 579.7	GWL: Depth Date/Time	DATE STARTED: 08-MAY-89
ENGINEER/GEOLOGIST: C.GRUBE/L.ADAMS	Depth Date/Time	DATE COMPLETE: 08-MAY-89
DRILLING METHOD: AUGER		

DEPTH	SAMPLE	DATE TIME	BLOWS ON	SAMPLE	RECOVERY	INCHES		USCS SYMBOL	TSF	REMARKS
6.5 7.0	016454	05/08/89 13:17	7		4		STIFF, YELLOWISH BROWN (10 YR 5/4) SILTY CLAY, TRACE SAND, MEDIUM PLASTICITY, VERY MOIST TO WET.	CL	1.5	PID=0 ppm α=0 ppm βΓ=50-60 cpm
7.0 7.5	016455	05/08/89 13:17	6		N/A		NO RECOVERY	N/A	N/A	
7.5 8.0	016456	05/08/89 13:30	4		6		VERY SOFT, YELLOWISH BROWN (10 YR 5/6), SILTY CLAY, TRACE SAND, WET.	CL	.25	PID=0 ppm α=0 ppm βΓ=60-80 cpm
8.0 8.5	016457	05/08/89 13:30	3		6		SOFT, OLIVE GRAY (5 Y 4/2) CLAY, TRACE SAND AND SILT, MEDIUM PLASTICITY, VERY MOIST.	CL	.25	PID=0 ppm α=0 ppm βΓ=60-80 cpm
8.5 9.0	016458	05/08/89 13:30	4		2		LOOSE, YELLOWISH BROWN (10 YR 5/6) SILTY SAND, TRACE GRAVEL (1.0 - 1.5 IN), MOIST.	SM	N/A	PID=0 ppm α=0 ppm βΓ=60-80 cpm
9.0 9.5	016459	05/08/89 14:45	5		6		MEDIUM STIFF, DARK BROWN (10 YR 3/3) SILTY CLAY, LOW PLASTICITY, MOIST.	CL	.75	PID=0 ppm α=0 ppm βΓ=60-80 cpm
9.5 10.0	016460	05/08/89 14:45	3		6		LOOSE, YELLOWISH BROWN (10 YR 5/6) SILTY SAND, TRACE FINE GRAVEL, POORLY GRADED, WET.	SM	N/A	PID=0 ppm α=0 ppm βΓ=60-80 cpm
10.0 10.5	016461	05/08/89 14:45	4		N/A		NO RECOVERY	N/A	N/A	
10.5 11.0	016462	05/08/89 14:55	12		6		MEDIUM DENSE, YELLOWISH BROWN (10 YR 5/6) POORLY GRADED SAND, WET.	SP	N/A	PID=0 ppm α=0 ppm βΓ=60-80 cpm
11.0 11.5	055164	05/08/89 14:55	10		6		MEDIUM DENSE, YELLOWISH BROWN (10 YR 5/6) WELL GRADED SAND, WET. MEDIUM DENSE, YELLOWISH BROWN (10 YR 5/6) SILT, TRACE SAND, VERY MOIST.	SW ML	N/A	PID=0 ppm α=0 ppm βΓ=60-80 cpm
11.5 12.0	050660	05/08/89 14:55	13		6		STIFF, GRAY (5 Y 5/1) SILTY CLAY, TRACE FINE GRAVEL, MOIST.	CL	1.5	PID=0 ppm α=0 ppm βΓ=60-80 cpm

NOTES:

SAA = Same as Above
PID = Photoionization Detector
N/A = Not Applicable

PROJECT NUMBER: 602 3.7	PROJECT NAME: CRU2 PHASE I FIELD INVESTIGATION	
BORING NUMBER: 1210	COORDINATES: NORTH 480485.42 EAST 1379844.46	DATE:03-MAY-89
GROUND ELEVATION: 578.91	GWL: Depth Date/Time	DATE STARTED: 03-MAY-89
ENGINEER/GEOLOGIST: TROLLINGER/GRUB	Depth Date/Time	DATE COMPLETE: 03-MAY-89
DRILLING METHOD: AUGER		

DEPTH	SAMPLE	DATE TIME	BLOWS ON SAMPLE	RECOVERY INCHES		USCS SYMBOL	TSF	REMARKS
.5	017189	05/03/89 10:00	2	12	VERY STIFF, BROWN (10 YR 3/3) SILTY CLAY, TRACE OF ORGANICS (GRASS, ROOTS), LOW PLASTICITY, MOIST.	CL	2.5	PID=0.0-0.2 ppm α=0 ppm BΓ=80 cpm
.5 1.0	017190	05/03/89 10:00	6	12	VERY STIFF, BROWN, (10 YR 3/3), SILTY CLAY, TRACE OF FINE GRAVEL, LOW PLASTICITY, MOIST.	CL	3.5	PID=0.0-0.2 ppm α=0 ppm BΓ=80 cpm
1.0 1.5	017191	05/03/89 10:00	15	N/A	NO RECOVERY	N/A	N/A	
1.5 2.0	017192	05/03/89 10:07	7	12	VERY STIFF, BROWN, (10 YR 4/4) SILTY CLAY, TRACE OF FINE GRAVEL, LOW PLASTICITY, MOIST.	CL	4.0	PID=0.2 ppm α=0 ppm BΓ=80 cpm
2.0 2.5	017193	05/03/89 10:07	11	12	VERY STIFF, BROWN (10 YR 4/4), SILTY CLAY, TRACE OF SAND AND FINE GRAVEL, LOW PLASTICITY, MOIST.	CL	3.0	PID=0.2 ppm α=0 ppm BΓ=80 cpm
2.5 3.0	017194	05/03/89 10:07	15	N/A	NO RECOVERY	N/A	N/A	
3.0 3.5	017195	05/03/89 10:14	9	14	VERY STIFF, YELLOWISH BROWN (10 YR 5/6), SILTY CLAY, TRACE OF FINE GRAVEL; LOW PLASTICITY, MOIST.	CL	4.0	PID=0.2 ppm α=0 ppm BΓ=80 cpm
3.5 4.0	017196	05/03/89 10:14	18	14	VERY STIFF, YELLOWISH BROWN (10 YR 5/6) TO GRAY (10 YR 5/1), CLAY, MEDIUM PLASTICITY, MOIST (2 IN. RECOV. ON 17197)	CL	3.0	PID=0.2 ppm α=0 ppm BΓ=80 cpm
4.0 4.5	017197	05/03/89 10:14	25	14	VERY STIFF, YELLOWISH BROWN (10 YR 5/6) TO GRAY (10 YR 5/1), CLAY, MEDIUM PLASTICITY, MOIST (2 IN. RECOV. ON 17197)	CL	2.0	PID=0.2 ppm α=0 ppm BΓ=80 cpm
4.5 5.0	017198	05/03/89 10:23	19	15	STIFF, YELLOWISH BROWN, (10 YR 5/4), CLAY, MEDIUM PLASTICITY, MOIST.	CL	1.75	PID=0.2 ppm α=0 ppm BΓ=80 cpm
5.0 5.5	017199	05/03/89 10:23	23	15	STIFF, YELLOWISH BROWN, (10 YR 5/4), CLAY, TRACE OF COARSE SAND, MEDIUM PLASTICITY, MOIST. (3 IN RECOV. ON 17200)	CL	1.50	PID=0.2 ppm α=0 ppm BΓ=80 cpm
5.5 6.0	017200	05/03/89 10:23	26	15	STIFF, YELLOWISH BROWN, (10 YR 5/4), CLAY, TRACE OF COARSE SAND, MEDIUM PLASTICITY, MOIST. (3 IN RECOV. ON 17200)	CL	1.50	PID=0.2 ppm α=0 ppm BΓ=80 cpm
6.0 6.5	017201	05/03/89 13:25	3	18	VERY STIFF, OLIVE GRAY (5 Y 5/2) TO YELLOWISH BROWN, (10 YR 4/6) SILTY CLAY, LOW TO MEDIUM PLASTICITY, MOIST.	CL	3.25	PID=0.2 ppm α=0 ppm BΓ=80 cpm

NOTES:

SAA = Same as Above
PID = Photoionization Detector
N/A = Not Applicable

PROJECT NUMBER: 602 3.7	PROJECT NAME: CRU2 PHASE I FIELD INVESTIGATION	
BORING NUMBER: 1210	COORDINATES: NORTH 480485.42 EAST 1379844.46	DATE:03-MAY-89
GROUND ELEVATION: 578.91	GWL: Depth Date/Time	DATE STARTED: 03-MAY-89
ENGINEER/GEOLOGIST: TROLLINGER/GRUB	Depth Date/Time	DATE COMPLETE: 03-MAY-89
DRILLING METHOD: AUGER		

DEPTH	SAMPLE	DATE TIME	BLOWS ON	SAMPLE	RECOVERY	INCHES		USCS	SYMBOL	TSF	REMARKS
6.5 7.0	017202	05/03/89 13:25	6		18		VERY STIFF, OLIVE GRAY (5 Y 5/2) TO YELLOWISH BROWN, (10 YR 4/6) SILTY CLAY, LOW TO MEDIUM PLASTICITY, MOIST.	CL		3.0	PID=0.2 ppm α=0 ppm BΓ=80 cpm
7.0 7.5	017203	05/03/89 13:25	7		18		MEDIUM DENSE, YELLOWISH BROWN, (10 YR 5/6) SILT, WET-SATURATED.	ML		N/A	PID=0.2 ppm α=0 ppm BΓ=80 cpm
7.5 8.0	017204	05/03/89 13:30	4		17		DENSE, BROWN (10 YR 5/3) CLAYEY SILT, SATURATED.	ML		N/A	PID=0.2 ppm α=0 ppm BΓ=80 cpm
8.0 8.5	017205	05/03/89 13:30	14		17		DENSE, YELLOWISH BROWN (10 YR 5/6) SILT, WET.	ML		N/A	PID=0.2 ppm α=0 ppm BΓ=80 cpm
8.5 9.0	017206	05/03/89 13:30	18		17		DENSE, YELLOWISH BROWN (10 YR 5/6) SILT, WET.	ML		N/A	PID=0.2 ppm α=0 ppm BΓ=80 cpm
9.0 9.5	017207	05/03/89 13:35	10		18		MEDIUM DENSE, YELLOWISH BROWN, (10 YR 5/6), SILT, WET.	ML		N/A	PID=0.2 ppm α=0 ppm BΓ=80 cpm
9.5 10.0	017208	05/03/89 13:35	16		18		MEDIUM DENSE, YELLOWISH BROWN, (10 YR 5/6), SILT, WET.	ML		N/A	PID=0.2 ppm α=0 ppm BΓ=80 cpm
10.0 10.5	017209	05/03/89 13:35	19		18		VERY STIFF, YELLOWISH BROWN (10 YR 5/6) SILTY CLAY, MOIST.	CL		2.75	PID=0.2 ppm α=0 ppm BΓ=80 cpm

NOTES:

SAA = Same as Above
PID = Photoionization Detector
N/A = Not Applicable

001C26

PROJECT NUMBER:	PROJECT NAME:	
BORING NUMBER: 1229	COORDINATES: NORTH 480262.59 EAST 1379834.54	DATE:
GROUND ELEVATION: 577.87	GWL: Depth Date/Time	DATE STARTED:
ENGINEER/GEOLOGIST:	Depth Date/Time	DATE COMPLETE:
DRILLING METHOD: AUGER		

DEPTH	SAMPLE	DATE	TIME	BLOWS ON	SAMPLE	RECOVERY INCHES		USCS SYMBOL	TSF	REMARKS
.5	017607	05/01/89	10:25	9 19 27		8	NATURAL GRAVEL FILL, MEDIUM SIZE, WET FROM SURFACE WATER.	GP	N/A	PID=0 ppm α=0 ppm βΓ=100-110 cpm
.5 1.0	017608	05/01/89	10:25	9 19 27		8	NATURAL GRAVEL FILL, MEDIUM SIZE, WET FROM SURFACE WATER.	GP	N/A	PID=0 ppm α=0 ppm βΓ=100-110 cpm
1.0 1.5	017609	05/01/89	10:25	9 19 27		8	NATURAL GRAVEL FILL, MEDIUM SIZE, WET FROM SURFACE WATER.	GP	N/A	PID=0 ppm α=0 ppm βΓ=100-110 cpm
1.5 2.0	017610	05/01/89	10:30	19 12 12		9	MEDIUM DENSE, YELLOWISH BROWN (10 YR 4/4) TO GRAY (10 YR 4/2) SANDY GRAVEL, WET FROM SURFACE WATER.	GW	N/A	PID=0 ppm α=0 ppm βΓ=100-110 cpm
2.0 2.5	017611	05/01/89	10:30	19 12 12		9	MEDIUM DENSE, YELLOWISH BROWN (10 YR 4/4) TO GRAY (10 YR 4/2) SANDY GRAVEL, WET FROM SURFACE WATER.	GW	N/A	PID=0 ppm α=0 ppm βΓ=100-110 cpm
2.5 3.0	017612	05/01/89	10:30	19 12 12		9	STIFF, GRAY (10 YR 4/1) CLAY, TRACE OF FINE GRAVEL, MEDIUM PLASTIC, WET FROM SURFACE WATER.	CL	1.75	PID=0 ppm α=0 ppm βΓ=100-110 cpm
3.0 3.5	017613	05/01/89	10:35	6 7 14		10	STIFF, GRAY (10 YR 4/1) CLAY, TRACE OF FINE GRAVEL, MEDIUM PLASTIC, WET FROM SURFACE WATER. VERY STIFF, GRAY (5 Y 4/2), CLAY, TRACE FINE GRAVEL, MEDIUM PLASTIC, MOIST.	CL	2.75	PID=0 ppm α=0 ppm βΓ=100-120 cpm
3.5 4.0	017614	05/01/89	10:35	6 7 14		10	STIFF, OLIVE GRAY (5 Y 4/3), CLAY, MEDIUM PLASTIC, MOIST.	CL	1.75	PID=0 ppm α=0 ppm βΓ=100-120 cpm
4.0 4.5	017615	05/01/89	10:35	6 7 14		10	STIFF, OLIVE GRAY (5 Y 4/3), CLAY, MEDIUM PLASTIC, MOIST.	CL	1.75	PID=0 ppm α=0 ppm βΓ=100-120 cpm
4.5 5.0	017616	05/01/89	10:43	13 17 26		10	STIFF, YELLOWISH BROWN (10 YR 5/6), CLAY, TRACE SAND, MEDIUM PLASTIC, MOIST.	CL	1.75	PID=0 ppm α=0 ppm βΓ=80-100 cpm
5.0 5.5	017617	05/01/89	10:43	13 17 26		10	STIFF, YELLOWISH BROWN (10 YR 5/6), CLAY, TRACE SAND, MEDIUM PLASTIC, MOIST.	CL	1.75	PID=0 ppm α=0 ppm βΓ=80-100 cpm
5.5 6.0	017618	05/01/89	10:43	13 17 26		10	STIFF, YELLOWISH BROWN (10 YR 5/6), CLAY, TRACE SAND, MEDIUM PLASTIC, MOIST.	CL	1.75	PID=0 ppm α=0 ppm βΓ=80-100 cpm
6.0 6.5	017619	05/01/89	13:40	6 12 19		16	VERY STIFF, LIGHT OLIVE BROWN (5 Y 5/4), CLAY, LOW TO MEDIUM PLASTIC, MOIST.	CL	3.5	PID=0 ppm α=0 ppm βΓ=80-110 cpm

NOTES:

SAA = Same as Above
PID = Photoionization Detector
N/A = Not Applicable

PROJECT NUMBER:	PROJECT NAME:	
BORING NUMBER: 1229	COORDINATES: NORTH 480262.59 EAST 1379834.54	DATE:
GROUND ELEVATION: 577.87	GWL: Depth Date/Time	DATE STARTED:
ENGINEER/GEOLOGIST:	Depth Date/Time	DATE COMPLETE:
DRILLING METHOD: AUGER		

DEPTH	SAMPLE	DATE TIME	BLOWS ON SAMPLE	RECOVERY INCHES		USCS SYMBOL	TSF	REMARKS
6.5 7.0	017620 05/01/89 13:40		6 12 19	16	VERY STIFF, LIGHT OLIVE BROWN (5 Y 5/4), CLAY, LOW TO MEDIUM PLASTIC, MOIST.	CL	3.5	PID=0 ppm α=0 ppm βΓ=80-110 cpm
7.0 7.5	017621 05/01/89 13:40		6 12 19	16	VERY STIFF, LIGHT OLIVE BROWN (5 Y 5/4), CLAY, LOW TO MEDIUM PLASTIC, MOIST.	CL	3.5	PID=0 ppm α=0 ppm βΓ=80-110 cpm
7.5 8.0	017622 05/01/89 13:45		14 16 22	7	STIFF, YELLOWISH BROWN (10 YR 5/6), SILTY CLAY, LOW PLASTIC, MOIST.	CL	1.5	PID=0 ppm α=0 ppm βΓ=100-120 cpm
8.0 8.5	017623 05/01/89 13:45		14 16 22	7	STIFF, YELLOWISH BROWN (10 YR 5/6), SILTY CLAY, LOW PLASTIC, MOIST.	CL	1.5	PID=0 ppm α=0 ppm βΓ=100-120 cpm
8.5 9.0	017624 05/01/89 13:45		14 16 22	7	STIFF, YELLOWISH BROWN (10 YR 5/6), SILTY CLAY, LOW PLASTIC, MOIST.	CL	1.5	PID=0 ppm α=0 ppm βΓ=100-120 cpm
9.0 9.5	017625 05/01/89 14:15		18 20 32	N/A	NO RECOVERY	N/A	N/A	
9.5 10.0	017626 05/01/89 14:15		18 20 32	N/A	NO RECOVERY	N/A	N/A	
10.0 10.5	017627 05/01/89 14:15		18 20 32	N/A	NO RECOVERY	N/A	N/A	
10.5 11.0	017628 05/01/89 14:30		8 6 10	18	STIFF, YELLOWISH BROWN (10 YR 5/6), SILTY CLAY, TRACE SAND MEDIUM GRAVEL, LOW PLASTICITY, MOIST.	CL	1.0	PID=0 ppm α=0 ppm βΓ=80-100 cpm
11.0 11.5	050627 05/01/89 14:30		8 6 10	18	MEDIUM DENSE, CLAYEY SILTS, YELLOWISH BROWN (10 YR 5/6), WET.	ML	N/A	PID=0 ppm α=0 ppm βΓ=80-100 cpm
11.5 12.0	050628 05/01/89 14:30		8 6 10	18	MEDIUM STIFF, GRAY (5 Y 5/1) CLAY, TRACE COARSE SAND, TRACE MEDIUM GRAVEL, WET. GRAY-BROWN (10 YR 5/2) CLAY IN END OF SPOON.	CL	0.75	PID=0 ppm α=0 ppm βΓ=80-100 cpm

NOTES:

SAA = Same as Above
PID = Photoionization Detector
N/A = Not Applicable

PROJECT NUMBER: 20.03.05	PROJECT NAME: CRU2 RI PHASE II FIELD INVESTIGATION	
BORING NUMBER: 1934	COORDINATES: NORTH 480394.07 EAST 1379744.81	DATE:01-MAY-93
GROUND ELEVATION: 577.81	GWL: Depth Date/Time	DATE STARTED: 01-MAY-93
ENGINEER/GEOLOGIST: B MUELLER	Depth Date/Time	DATE COMPLETE: 04-MAY-93
DRILLING METHOD: HOLLOW STEM AUGER		

DEPTH	SAMPLE DATE TIME	BLOWS ON SAMPLE	RECOVERY INCHES		USCS SYMBOL	TSF	REMARKS
.5	111175 05/01/93 15:05	10	6	NA, (10YR,4/4) DARK YELLOWISH BROWN, SANDY SILTY CLAY, LOW PLASTICITY, MOIST	CL	N/A	PID=0 ppm α=0 ppm BΓ=70 cpm
.5 1.0	111176 05/01/93 15:05	14	6	HARD, (2.5Y,5/6) LIGHT OLIVE BROWN, SILTY CLAY, SAND LOW PLASTICITY, MOIST	CL	4.5	PID=0 ppm α=0 ppm BΓ=70 cpm
1.0 1.5	111177 05/01/93 15:05	12	4	SAA	CL	4.5	PID=0 ppm α=0 ppm BΓ=70 cpm
1.5 2.0	05/01/93 15:05	5	0	NO RECOVERY	N/A	N/A	PID=0 ppm α=0 ppm BΓ=70 cpm
2.0 2.5	111178 05/01/93 15:10	10	6	STIFF, (2.5Y,5/4) LIGHT OLIVE BROWN, SANDY SILTY CLAY, LOW PLASTICITY, MOIST	CL	2	PID=0 ppm α=0 ppm BΓ=90 cpm
2.5 3.0	111179 05/01/93 15:10	14	6	VERY STIFF, (10YR,4/3) BROWN, SILTY CLAY, MEDIUM PLASTICITY, MOIST	CL	2.5	PID=0 ppm α=0 ppm BΓ=90 cpm
3.0 3.5	111180 05/01/93 15:10	14	6	SAA	CL	2.5	PID=0 ppm α=0 ppm BΓ=90 cpm
3.5 4.0	111181 05/01/93 15:10	12	6	SAA	CL	3	PID=0 ppm α=0 ppm BΓ=90 cpm
4.0 4.5	111182 111183 111184 05/01/93 15:30	15	6	VERY STIFF, (2.5Y,6/3) LIGHT YELLOWISH BROWN, SILTY CLAY, TRACE SAND, ORANGE MOTTLES, MEDIUM PLASTICITY, MOIST	CL	3.0	PID=0 ppm α=0 ppm BΓ=100 cpm
4.5 5.0	111182 111183 111184 05/01/93 15:30	15	6	SAA	CL	3.5	PID=0 ppm α=0 ppm BΓ=100 cpm
5.0 5.5	111182 111184 111183 05/01/93 15:30	20	6	SAA	CL	3.0	PID=0 ppm α=0 ppm BΓ=100 cpm

NOTES:

Driller: DAN JAMISON
Drilling Equipment: MOBIL B80

SAA = Same as Above
PID = Photoionization Detector
N/A = Not Applicable

PROJECT NUMBER: 20.03.05	PROJECT NAME: CRU2 RI PHASE II FIELD INVESTIGATION	
BORING NUMBER: 1934	COORDINATES: NORTH 480394.07 EAST 1379744.81	DATE:01-MAY-93
GROUND ELEVATION: 577.81	GWL: Depth Date/Time	DATE STARTED: 01-MAY-93
ENGINEER/GEOLOGIST: B MUELLER	Depth Date/Time	DATE COMPLETE: 04-MAY-93
DRILLING METHOD: HOLLOW STEM AUGER		

DEPTH	SAMPLE	DATE TIME	BLOWS ON	SAMPLE	RECOVERY	INCHES		USCS	SYMBOL	TSF	REMARKS
	111183						SAA				
5.5 6.0	111184 05/01/93 15:30		21		6			CL		2.5	PID=0 ppm α=0 ppm βΓ=100 cpm
6.0 6.5	111185 05/01/93 15:52		5		6		VERY STIFF, (2.5Y,5/6) LIGHT OLIVE BROWN, SILTY CLAY, TRACE SAND, ORANGE MOTTLES, LOW PLASTICITY, MOIST	CL		3.0	PID=0 ppm α=0 ppm βΓ=80 cpm
6.5 7.0	111186 05/01/93 15:52		8		6		SAA	CL		3.5	PID=0 ppm α=0 ppm βΓ=80 cpm
7.0 7.5	111187 05/01/93 15:52		9		6		SAA INCREASE LESS SILT AT 1" HORIZON	CL		2.0	PID=0 ppm α=0 ppm βΓ=80 cpm
7.5 8.0	111188 05/01/93 16:00		5		6		VERY STIFF, (2.5Y,5/6) LIGHT OLIVE BROWN, SILTY CLAY, TRACE ORANGE MOTTLES, MEDIUM PLASTICITY, MOIST	CL		2.5	PID=0 ppm α=0 ppm βΓ=80 cpm
8.0 8.5	114517 05/01/93 16:00		9		6		SAA	CL		4.0	PID=0 ppm α=0 ppm βΓ=80 cpm
8.5 9.0	114518 05/01/93 16:00		8		6		VERY STIFF, (2.5Y,5/2) GRAYISH BROWN, SILTY CLAY, ORANGE MOTTLES, INCREASED SILT TOWARD BOTTOM, LOW PLASTICITY, MOIST	CL		2.5	PID=0 ppm α=0 ppm βΓ=80 cpm
9.0 9.5	114519 05/01/93 16:06		4		6		STIFF, (10YR,5/4) YELLOWISH BROWN, SILTY CLAY, LOW-MEDIUM PLASTICITY, MOIST	CL		1.75	PID=0 ppm α=0 ppm βΓ=90 cpm
9.5 10.0	114520 05/01/93 16:06		5		6		SOFT, SAA	CL		0.5	PID=0 ppm α=0 ppm βΓ=90 cpm
10.0 10.5	114521 05/01/93 16:06		5		3		SOFT, (2.5Y,5/2) GRAYISH BROWN, SILTY CLAY, MEDIUM PLASTICITY, MOIST	CL		.25	PID=0 ppm α=0 ppm βΓ=90 cpm
10.5 11.0	114522 05/01/93 16:17		5		6		STIFF, (2.5Y,5/2) LIGHT OLIVE BROWN, SILTY CLAY, LOW PLASTICITY, MOIST	CL		1.0	PID=0 ppm α=0 ppm βΓ=80 cpm
11.0 11.5	114523 05/01/93 16:17		6		6		STIFF, (5Y, 5/1) GRAY, SILTY CLAY, INCREASED SILT AT SOME HORIZONS, LOW PLASTICITY, VERY MOIST	CL		1.0	PID=0 ppm α=0 ppm βΓ=80 cpm
11.5 12.0	05/01/93 16:17		8		0		NO RECOVERY	N/A		N/A	PID=0 ppm α=0 ppm βΓ=80 cpm

NOTES:

Driller: DAN JAMISON
Drilling Equipment: MOBIL B80

SAA = Same as Above
PID = Photoionization Detector
N/A = Not Applicable

PROJECT NUMBER: 20.03.05	PROJECT NAME: CRU2 RI PHASE II FIELD INVESTIGATION	
BORING NUMBER: 1934	COORDINATES: NORTH 480394.07 EAST 1379744.81	DATE:01-MAY-93
GROUND ELEVATION: 577.81	GWL: Depth Date/Time	DATE STARTED: 01-MAY-93
ENGINEER/GEOLOGIST: B MUELLER	Depth Date/Time	DATE COMPLETE: 04-MAY-93
DRILLING METHOD: HOLLOW STEM AUGER		

DEPTH	SAMPLE	DATE TIME	BLOWS ON SAMPLE	RECOVERY INCHES		USCS SYMBOL	TSF	REMARKS
12.0 12.5	114524	05/01/93 16:29	2	6	VERY STIFF, (2.5Y,5/3) LIGHT OLIVE BROWN, SILTY CLAY, MEDIUM PLASTICITY, MOIST	CL	.25	PID=0 ppm α=0 ppm βΓ=70 cpm
12.5 13.0	114525	05/01/93 16:29	3	6	STIFF, (2.5Y,5/2) OLIVE GRAY, SILTY CLAY, LOW PLASTICITY, VERY MOIST	CL	1.5	PID=0 ppm α=0 ppm βΓ=70 cpm
13.0 13.5		05/01/93 16:29	3	0	NO RECOVERY	N/A	N/A	PID=0 ppm α=0 ppm βΓ=70 cpm
13.5 14.0	114526	05/02/93 09:05	6	6	VERY SOFT, (2.5Y,5/2) GRAYISH BROWN, SILTY CLAY, MEDIUM PLASTICITY, VERY MOIST	CL	.25	PID=0 ppm α=0 ppm βΓ=90 cpm
14.0 14.5	114527	05/02/93 09:05	6	6	SAA	CL	.25	PID=0 ppm α=0 ppm βΓ=90 cpm
14.5 15.0	114528	05/02/93 09:05	12	6	STIFF, SAA, MOIST	CL	1.0	PID=0 ppm α=0 ppm βΓ=90 cpm
15.0 15.5	114529	05/02/93 09:12	4	6	VERY SOFT, (2.5Y,5/2) GRAYISH BROWN, SILTY CLAY, MODERATE PLASTICITY, MOIST	CL	.25	PID=0 ppm α=0 ppm βΓ=90-100 cpm
15.5 16.0	114530	05/02/93 09:12	8	6	STIFF, SAA	CL	1.0	PID=0 ppm α=0 ppm βΓ=90-100 cpm
16.0 16.5	114531	05/02/93 09:12	8	6	STIFF, SAA	CL	1.5	PID=0 ppm α=0 ppm βΓ=90-100 cpm
16.5 17.0	114532	05/02/93 09:20	5	6	SAA, MEDIUM STIFF, AND 1" SILTY FINE SAND, WET, HORIZON	CL	.75	PID=0 ppm α=0 ppm βΓ=80-90 cpm
17.0 17.5	114533	05/02/93 09:20	8	6	STIFF, SAA	CL	1.0	PID=0 ppm α=0 ppm βΓ=80-90 cpm
17.5 18.0	114534	05/02/93 09:20	2	6	STIFF, SAA	CL	1.5	PID=0 ppm α=0 ppm βΓ=80-90 cpm
18.0 18.5	114535	05/02/93 09:28	1	6	VERY STIFF, (2.5Y,5/4) LIGHT OLIVE BROWN, SILTY CLAY, MEDIUM PLASTICITY, MOIST	CL	.25	PID=0 ppm α=0 ppm βΓ=90 cpm

NOTES:

Driller: DAN JAMISON
Drilling Equipment: MOBIL B80

SAA = Same as Above
PID = Photoionization Detector
N/A = Not Applicable

02/02/94 14:10

PROJECT NUMBER: 20.03.05	PROJECT NAME: CRU2 RI PHASE II FIELD INVESTIGATION	
BORING NUMBER: 1934	COORDINATES: NORTH 480394.07 EAST 1379744.81	DATE:01-MAY-93
GROUND ELEVATION: 577.81	GWL: Depth Date/Time	DATE STARTED: 01-MAY-93
ENGINEER/GEOLOGIST: B MUELLER	Depth Date/Time	DATE COMPLETE: 04-MAY-93
DRILLING METHOD: HOLLOW STEM AUGER		

DEPTH	SAMPLE	DATE TIME	BLOWS ON	SAMPLE	RECOVERY INCHES		USCS	SYMBOL	TSF	REMARKS
18.5 19.0	114536	05/02/93 09:28	1		6	SOFT, (2.5Y,5/2) GRAYISH BROWN, SILTY CLAY, MEDIUM PLASTICITY, MOIST	CL		.25	PID=0 ppm α=0 ppm βΓ=90 cpm
19.0 19.5		05/02/93 09:28	3		0	NO RECOVERY	N/A		N/A	
19.5 20.0	114537	05/02/93 09:40	3		6	VERY SOFT, SAA	CL		.25	PID=0 ppm α=0 ppm βΓ=70-80 cpm
20.0 20.5	114538	05/02/93 09:40	3		6	VERY SOFT, SAA	CL		.25	PID=0 ppm α=0 ppm βΓ=70-80 cpm
20.5 21.0	114534	05/02/93 09:40	8		6	SOFT, SAA	CL		.25	PID=0 ppm α=0 ppm βΓ=70-80 cpm

NOTES:

Driller: DAN JAMISON
Drilling Equipment: MOBIL B80

SAA = Same as Above
PID = Photoionization Detector
N/A = Not Applicable

PROJECT NUMBER: 20.03.05	PROJECT NAME: CRU2 RI PHASE II FIELD INVESTIGATION	
BORING NUMBER: 1937	COORDINATES: NORTH 480645.51 EAST 1379534.49	DATE:28-APR-93
GROUND ELEVATION: 576.81	GWL: Depth 1.82 Date/Time 01-May-93 10:20	DATE STARTED: 28-APR-93
ENGINEER/GEOLOGIST: B E MULLER	Depth Date/Time	DATE COMPLETE: 30-APR-93
DRILLING METHOD: HOLLOW STEM AUGER		

DEPTH	SAMPLE	DATE TIME	BLOWS ON	SAMPLE	RECOVERY INCHES		USCS SYMBOL	TSF	REMARKS
.5	111138	04/28/93 11:30	1		6	VERY SOFT, (10YR,3/3) DARK BROWN, CLAY WITH TRACE COARSE SAND, MOIST	CL	0.25	PID=0 ppm α=0 ppm βΓ=60 cpm
.5 1.0	111139	04/28/93 11:30	4		6	HARD, (10YR,6/4) LIGHT YELLOWISH BROWN, SILTY CLAY WITH TRACE MED.- COARSE SAND, MOIST	CL	4.25	PID=0 ppm α=0 ppm βΓ=60 cpm
1.0 1.5	111140	04/28/93 11:30	13		2	SAA	CL	4.50	PID=0 ppm α=0 ppm βΓ=60 cpm
1.5 2.0		04/28/93 11:30	13		0		N/A	N/A	
2.0 2.5	111141 111142 111143	04/28/93 11:40	11		6	VERY STIFF, (2.5Y,6/4) LIGHT OLIVE BROWN, SILTY CLAY, WITH TRACE MED-COARSE SAND, MOIST	CL	3.0	PID=0 ppm α=0 ppm βΓ=80 cpm
2.5 3.0	111141 111142 111143	04/28/93 11:40	N/A 14		6	VERY STIFF, (10YR,6/6) BROWNISH YELLOW, SILTY CLAY, TRACE MEDIUM FINE SAND, MOIST	N/A CL	N/A 3.0	PID=0 ppm α=0 ppm βΓ=80 cpm
3.0 3.5	111141 111142 111143	04/28/93 11:40	N/A 21		6	HARD, SAA, INCREASE SILT AND TRACE ORANGE MOTTLES	CL	4.5	PID=0 ppm α=0 ppm βΓ=80 cpm
3.5 4.0	111141 111142 111143	04/28/93 11:40	32		0		N/A	N/A	
4.0 4.5	111144	04/28/93 13:30	3		6	VERY STIFF, (2.5Y,5/2) GRAYISH BROWN, SILTY CLAY, MOIST	CL	2.5	PID=0 ppm α=0 ppm βΓ=70 cpm
4.5 5.0	111145	04/28/93 13:30	5		5	SAA	CL	2.75	PID=0 ppm α=0 ppm βΓ=70 cpm
5.0 5.5		04/28/93 13:30	7		6		N/A	N/A	

NOTES:
THE TOP GIN SECTION OF RISER IS BENT AND NEED TO BE REPLACED.

Driller: DAN JAMISON
Drilling Equipment: MOBIL 880

SAA = Same as Above
PID = Photoionization Detector
N/A = Not Applicable

PROJECT NUMBER: 20.03.05	PROJECT NAME: CRU2 RI PHASE II FIELD INVESTIGATION	
BORING NUMBER: 1937	COORDINATES: NORTH 480645.51 EAST 1379534.49	DATE:28-APR-93
GROUND ELEVATION: 576.81	GWL: Depth 1.82 Date/Time 01-May-93 10:20	DATE STARTED: 28-APR-93
ENGINEER/GEOLOGIST: B E MULLER	Depth Date/Time	DATE COMPLETE: 30-APR-93
DRILLING METHOD: HOLLOW STEM AUGER		

DEPTH	SAMPLE	DATE TIME	BLOWS ON SAMPLE	RECOVERY INCHES		USCS SYMBOL	TSF	REMARKS
5.5 6.0	111146 04/28/93 13:35		10	6	VERY STIFF, (5Y,5/6) OLIVE, SILTY CLAY, MOIST	CL	3.5	PID=0 ppm α=0 ppm BΓ=70 cpm
6.0 6.5	111147 04/28/93 13:35		14	6	SAA	CL	3.5	PID=0 ppm α=0 ppm BΓ=70 cpm
6.5 7.0	111148 04/28/93 13:35		14	3	SAA	CL	3.0	PID=0 ppm α=0 ppm BΓ=70 cpm
7.0 7.5	111149 04/28/93 13:40		5	6	STIFF, (2.5Y,5/4) LIGHT OLIVE BROWN SILTY CLAY, MOIST	CL	2.0	PID=0 ppm α=0 ppm BΓ=60 cpm
7.5 8.0	111150 04/28/93 13:40		7	6	VERY STIFF, SAA, (2.5,5/4) LIGHT OLIVE BROWN, SILTY CLAY MOIST	CL	2.75	PID=0 ppm α=0 ppm BΓ=60 cpm
8.0 8.5	111151 04/28/93 13:40		8	6	STIFF, SAA	CL	1.75	PID=0 ppm α=0 ppm BΓ=60 cpm
8.5 9.0	111152 04/28/93 13:50		5	6	STIFF, (2.5Y,5/3) LIGHT OLIVE BROWN, SILTY CLAY, MOIST	CL	1.5	PID=0 ppm α=0 ppm BΓ=60 cpm
9.0 9.5	111153 04/28/93 13:50		4	6	SAA & 1" SILTY LASER, WET	CL	1.75	PID=0 ppm α=0 ppm BΓ=60 cpm
9.5 10.0	111154 04/28/93 13:50		5	2	VERY SOFT, (2.5Y,6/2) LIGHT BROWNISH GRAY, SILTY CLAY, WET	CL	.25	PID=0 ppm α=0 ppm BΓ=60 cpm
10.0 10.5	111155 04/28/93 14:00		4	6	STIFF, (2.5Y,5/4) LIGHT OLIVE BROWN, SILTY CLAY, WET	CL	1.5	PID=0 ppm α=0 ppm BΓ=60 cpm
10.5 11.0	111156 04/28/93 14:00		5	6	VERY SOFT, SAA	CL	.25	PID=0 ppm α=0 ppm BΓ=60 cpm
11.0 11.5	111157 04/28/93 14:00		3	2	VERY SOFT, (2.5Y,5/1) GRAY, SILTY CLAY, WET	CL	.25	PID=0 ppm α=0 ppm BΓ=60 cpm
11.5 12.0	111158 04/28/93 14:10		4	6	VERY SOFT, (2.5Y,N4/1)DARK GRAY, SILTY CLAY, WET	CL	.25	PID=0 ppm α=0 ppm BΓ=70 cpm

NOTES:
THE TOP GIN SECTION OF RISER IS BENT AND NEED TO BE REPLACED.

Driller: DAN JAMISON
Drilling Equipment: MOBIL B80

SAA = Same as Above
PID = Photoionization Detector
N/A = Not Applicable

PROJECT NUMBER: 20.03.05	PROJECT NAME: CRU2 RI PHASE II FIELD INVESTIGATION	
BORING NUMBER: 1937	COORDINATES: NORTH 480645.51 EAST 1379534.49	DATE:28-APR-93
GROUND ELEVATION: 576.81	GWL: Depth 1.82 Date/Time 01-May-93 10:20	DATE STARTED: 28-APR-93
ENGINEER/GEOLOGIST: B E MULLER	Depth Date/Time	DATE COMPLETE: 30-APR-93
DRILLING METHOD: HOLLOW STEM AUGER		

DEPTH	SAMPLE	DATE TIME	BLOWS ON SAMPLE	RECOVERY INCHES		USCS SYMBOL	TSF	REMARKS
12.0 12.5	111159 04/28/93 14:10	4	6	SAA	CL	.25	PID=0 ppm α=0 ppm βΓ=70 cpm
12.5 13.0	111160 04/28/93 14:10	6	6	LOOSE, (2.5Y,N4/1)DARK GRAY, WELL SORTED, FINE SAND AND SILT, WET	SM	N/A	PID=0 ppm α=0 ppm βΓ=70 cpm
13.0 13.5	111161 04/28/93 14:15	5	6	LOOSE, (2.5Y,N4/1)DARK GRAY, WELL SORTED, FINE SAND AND SILT, WET	SM	N/A	PID=0 ppm α=0 ppm βΓ=60 cpm
13.5 14.0	111162 04/28/93 14:15	8	6	SAA	SM	N/A	PID=0 ppm α=0 ppm βΓ=60 cpm
14.0 14.5	111163 04/28/93 14:15	8	2	SAA	SM	N/A	PID=0 ppm α=0 ppm βΓ=60 cpm
14.0 14.5	111164 04/30/93 09:05	8	6	MEDIUM DENSE, (2.5Y,6/2) LIGHT BROWNISH GRAY, SILTY FINE SAND, WET	SM	N/A	PID=1 ppm α=0 ppm βΓ=70 cpm
15.0 15.5	111165 04/30/93 09:05	9	6	MEDIUM DENSE, (2.5Y,6/2) LIGHT BROWNISH GRAY, SILTY FINE SAND, WET	SM	N/A	PID=1.0 ppm α=0 ppm βΓ=70 cpm
15.5 16.0	111160 04/30/93 09:05	15	6	SAA	SM	N/A	PID=1.0 ppm α=0 ppm βΓ=70 cpm
16.0 16.5	111167 04/30/93 09:20	7	6	VERY DENSE, (2.5Y,5/4) LIGHT OLIVE BROWN, SILT FINE SAND,WET, SMALL CLAY LAYER	SM	N/A	PID=1.0 ppm α=0 ppm βΓ=50 cpm
16.5 17.0	111168 04/30/93 09:20	46	2	VERY DENSE, (2.5Y,6/2) LIGHT BROWNISH GRAY, SILTY FINE SAND,WET	SM	N/A	PID=1.0 ppm α=0 ppm βΓ=50 cpm
17.0 17.5	04/30/93 09:20	50	0	NO RECOVERY	N/A	N/A	PID=1.0 ppm α=0 ppm βΓ=50 cpm
17.5 18.0	111169 04/30/93 09:27	17	6	DENSE, SAA	SM	N/A	PID=0.8 ppm α=0 ppm βΓ=70 cpm
18.0 18.5	111170 04/30/93 09:27	15	6	SAA	SM	N/A	PID=0.8 ppm α=0 ppm βΓ=70 cpm

NOTES:
THE TOP GIN SECTION OF RISER IS BENT AND NEED TO BE REPLACED.

Driller: DAN JAMISON
Drilling Equipment: MOBIL B80

SAA = Same as Above
PID = Photoionization Detector
N/A = Not Applicable

PROJECT NUMBER: 20.03.05	PROJECT NAME: CRU2 RI PHASE II FIELD INVESTIGATION	
BORING NUMBER: 1937	COORDINATES: NORTH 480645.51 EAST 1379534.49	DATE:28-APR-93
GROUND ELEVATION: 576.81	GWL: Depth 1.82 Date/Time 01-May-93 10:20	DATE STARTED: 28-APR-93
ENGINEER/GEOLOGIST: B E MULLER	Depth Date/Time	DATE COMPLETE: 30-APR-93
DRILLING METHOD: HOLLOW STEM AUGER		

DEPTH	SAMPLE	DATE TIME	BLOWS ON	SAMPLE	RECOVERY	INCHES		USCS	SYMBOL	TSF	REMARKS
18.5 19.0	111171 04/30/93 09:27		19		6		DENSE, (5Y,5/4) OLIVE CLAYEY SANDY SILT, VERY MOIST, TRACE FINE GRAVEL	ML		2.6	PID=0.8 ppm α=0 ppm BΓ=70 cpm
19.0 19.5	111172 04/30/93 09:27		3		6		MEDIUM DENSE, OLIVE, CLAYEY SANDY SILT, (5Y,5/4), WET, FINE GRAVEL	SC		N/A	PID=0.6 ppm α=0 ppm BΓ=70 cpm
19.5 20.0	111173 04/30/93 09:34		9		6		SAA	SC		N/A	PID=0.6 ppm α=0 ppm BΓ=70 cpm
20.0 20.5	111174 04/30/93 09:34		17		6		MEDIUM DENSE, (5Y,5/4) OLIVE , CLAYEY SANDY SILT, TRACE FINE GRAVEL, VERY MOIST	SC		N/A	PID=0.6 ppm α=0 ppm BΓ=70 cpm

NOTES:
THE TOP GIN SECTION OF RISER IS BENT AND NEED TO BE REPLACED.

Driller: DAN JAMISON
Drilling Equipment: MOBIL B80

SAA = Same as Above
PID = Photoionization Detector
N/A = Not Applicable

001036

PROJECT NUMBER: 20.03.05	PROJECT NAME: CRU2 RI PHASE II FIELD INVESTIGATION	
BORING NUMBER: 1940	COORDINATES: NORTH 480457.72 EAST 1379525.12	DATE:15-MAY-93
GROUND ELEVATION: 576.5	GWL: Depth 17 Date/Time 16-May-93 11:10	DATE STARTED: 15-MAY-93
ENGINEER/GEOLOGIST: GREG RONCZKA	Depth Date/Time	DATE COMPLETE: 24-MAY-93
DRILLING METHOD: HOLLOW STEM AUGERING		

DEPTH	SAMPLE	DATE TIME	BLOWS ON SAMPLE	RECOVERY INCHES		USCS SYMBOL	TSF	REMARKS
.5	114667	05/15/93 10:10	4	6	SOFT, (2.5Y,3/3) DARK OLIVE BROWN, SILTY CLAY, MEDIUM PLASTICITY, MOIST	CL	.25	PID=0 ppm α=0 ppm BΓ=60 cpm
.5 1.0	114668	05/15/93 10:10	8	6	STIFF, (2.5Y,5/4) LIGHT OLIVE BROWN, SILTY CLAY, MEDIUM PLASTICITY, MOIST	CL	1	PID=0 ppm α=0 ppm BΓ=60 cpm
1.0 1.5	114669	05/15/93 10:10	8	6	SAA	CL	1.75	PID=0 ppm α=0 ppm BΓ=60 cpm
1.5 2.0	114670	05/15/93 10:10	15	2	HARD, (2.5Y,5/4) LIGHT OLIVE BROWN, SILTY CLAY, MEDIUM PLASTICITY, MOIST	CL	4.5	PID=0 ppm α=0 ppm BΓ=60 cpm
2.0 3.5	114671	05/15/93 10:30	N/A	N/A	SHELBY TUBE	N/A	N/A	PID=0 ppm α=0 ppm BΓ=50 cpm
3.5 4.0	114671	05/15/93 10:30	N/A	N/A	VERY STIFF, (2.5Y,5/3) LIGHT OLIVE BROWN, SILTY CLAY, MEDIUM PLASTICITY, MOIST	CL	3.0	PID=0 ppm α=0 ppm BΓ=50 cpm
4.0 4.5	114672 114673	05/15/93 13:10	4	6	STIFF, (2.5Y,5/4) LIGHT OLIVE BROWN, SILTY CLAY, MEDIUM PLASTICITY, MOIST	CL	1.75	PID=0 ppm α=0 ppm BΓ=70 cpm
4.5 5.0	114672 114673	05/15/93 13:10	7	6	VERY STIFF, SAA	CL	2.5	PID=0 ppm α=0 ppm BΓ=70 cpm
5.0 5.5	114672 114673	05/15/93 13:10	7	6	VERY STIFF, SAA	CL	2.75	PID=0 ppm α=0 ppm BΓ=70 cpm
5.5 6.0	114672 114673	05/15/93 13:10	14	6	STIFF, SAA	CL	1.0	PID=0 ppm α=0 ppm BΓ=70 cpm
6.0 6.5	114674	05/15/93 13:25	4	6	SAA	CL	1.5	PID=0 ppm α=0 ppm BΓ=70 cpm
6.5 7.0	114675	05/15/93 13:25	7	6	VERY STIFF, SAA	CL	2.75	PID=0 ppm α=0 ppm BΓ=70 cpm

NOTES:
PROTECTIVE CASING IS SET, CONCRETE PAD TO BE INSTALLED AT A LATER DATE.

Boring Contractor: PENN DRILL
Driller: DAN JAMISON, DAN ARTHUR
Drilling Equipment: MOBILE, B-53 TRACK RIG

SAA = Same as Above
PID = Photoionization Detector
N/A = Not Applicable

PROJECT NUMBER: 20.03.05	PROJECT NAME: CRU2 RI PHASE II FIELD INVESTIGATION	
BORING NUMBER: 1940	COORDINATES: NORTH 480457.72 EAST 1379525.12	DATE:15-MAY-93
GROUND ELEVATION: 576.5	GWL: Depth 17 Date/Time 16-May-93 11:10	DATE STARTED: 15-MAY-93
ENGINEER/GEOLOGIST: GREG RONCZKA	Depth Date/Time	DATE COMPLETE: 24-MAY-93
DRILLING METHOD: HOLLOW STEM AUGERING		

DEPTH	SAMPLE / DATE / TIME	BLOWS ON SAMPLE	RECOVERY INCHES		USCS SYMBOL	TSF	REMARKS
7.0 7.5	114676 05/15/93 13:25	12	6	SAA	CL	3.5	PID=0 ppm α=0 ppm βΓ=70 cpm
7.5 8.0	114677 05/15/93 13:35	3	6	STIFF, (2.5Y,5/2) GRAYISH BROWN, SILTY CLAY, LOW PLASTICITY, MOIST	CL	1.75	PID=0 ppm α=0 ppm βΓ=80 cpm
8.0 8.5	114678 05/15/93 13:35	6	6	VERY STIFF, SAA	CL	3.5	PID=0 ppm α=0 ppm βΓ=80 cpm
8.5 9.0	114679 05/15/93 13:35	14	6	SAA	CL	3.5	PID=0 ppm α=0 ppm βΓ=80 cpm
9.0 9.5	114680 05/15/93 13:57	4	6	STIFF, (2.5Y,5/4) LIGHT OLIVE BROWN, SILTY CLAY, MEDIUM PLASTICITY, MOIST	CL	1	PID=0 ppm α=0 ppm βΓ=60 cpm
9.5 10.0	114681 05/15/93 13:57	4	6	MEDIUM STIFF, SAA	CL	.75	PID=0 ppm α=0 ppm βΓ=60 cpm
10.0 10.5	114682 05/15/93 13:57	4	6	MEDIUM STIFF, (5Y,5/1) GRAY, SILTY CLAY, MEDIUM PLASTICITY, MOIST	CL	.5	PID=0 ppm α=0 ppm βΓ=60 cpm
10.5 11.0	114683 05/15/93 14:30	4	6	LOOSE, (5Y,5/1) GRAY, SILTY, FINE GRAINED SAND, WET	SM	N/A	PID=0 ppm α=0 ppm βΓ=60 cpm
11.0 11.5	114684 05/15/93 14:30	5	4	SAA	SM	N/A	PID=0 ppm α=0 ppm βΓ=60 cpm
11.5 12.0	05/15/93 14:30	5	0	NO RECOVERY (INFERRED FROM BORING LOG)	N/A	N/A	
12.0 12.5	114685 05/15/93 14:40	5	6	VERY SOFT, (5Y,5/1) GRAY, SILTY CLAY, MEDIUM PLASTICITY, WET	CL	.25	PID=0 ppm α=0 ppm βΓ=70 cpm
12.5 13.0	114686 05/15/93 14:40	10	6	MEDIUM DENSE, (5Y,5/1) GRAY, SILTY FINE GRAINED SAND, WET	SM	N/A	PID=0 ppm α=0 ppm βΓ=70 cpm
13.0 13.5	114687 05/15/93 14:40	20	6	SAA	SM	N/A	PID=0 ppm α=0 ppm βΓ=70 cpm

NOTES:
PROTECTIVE CASING IS SET, CONCRETE PAD TO BE INSTALLED AT A LATER DATE.

Boring Contractor: PENN DRILL
Driller: DAN JAMISON, DAN ARTHUR
Drilling Equipment: MOBILE, B-53 TRACK RIG

SAA = Same as Above
PID = Photoionization Detector
N/A = Not Applicable

PROJECT NUMBER: 20.03.05	PROJECT NAME: CRU2 RI PHASE II FIELD INVESTIGATION	
BORING NUMBER: 1940	COORDINATES: NORTH 480457.72 EAST 1379525.12	DATE:15-MAY-93
GROUND ELEVATION: 576.5	GWL: Depth 17 Date/Time 16-May-93 11:10	DATE STARTED: 15-MAY-93
ENGINEER/GEOLOGIST: GREG RONCZKA	Depth Date/Time	DATE COMPLETE: 24-MAY-93
DRILLING METHOD: HOLLOW STEM AUGERING		

DEPTH	SAMPLE	DATE TIME	BLOWS ON SAMPLE	RECOVERY INCHES		USCS SYMBOL	TSF	REMARKS
13.5 14.0	114688 05/15/93 14:50		5	6	MEDIUM DENSE, (5Y,5/1) GRAY SILTY, FINE TO MEDIUM GRAINED SAND WITH TRACE OF GRAVEL, WET	SM	N/A	PID=0 ppm α=0 ppm βΓ=70 cpm
14.0 14.5	114689 05/15/93 14:50		10	6	SAA	SM	N/A	PID=0 ppm α=0 ppm βΓ=70 cpm
14.5 15.0	114690 05/15/93 14:50		10	6	SAA	SM	N/A	PID=0 ppm α=0 ppm βΓ=70 cpm
15.0 15.5	114691 05/15/93 15:05		4	6	SAA	SM	N/A	PID=0 ppm α=0 ppm βΓ=70 cpm
15.5 16.0	114692 05/15/93 15:05		7	6	SAA	SM	N/A	PID=0 ppm α=0 ppm βΓ=70 cpm
16.0 16.5	114693 05/15/93 15:05		7	6	MEDIUM STIFF, (5Y,5/1) GRAY, SILTY CLAY WITH SOME GRAVEL, MEDIUM PLASTICITY, MOIST	CL	.75	PID=0 ppm α=0 ppm βΓ=70 cpm
16.5 17.0	114694 05/15/93 15:20		10	6	VERY STIFF, SAA	CL	2.0	PID=0 ppm α=0 ppm βΓ=70 cpm
17.0 17.5	114695 05/15/93 15:20		22	6	SAA	CL	2.25	PID=0 ppm α=0 ppm βΓ=70 cpm
17.5 18.0	114696 05/15/93 15:20		22	6	HARD, SAA	CL	4.5	PID=0 ppm α=0 ppm βΓ=70 cpm
18.0 18.5	114697 05/15/93 15:30		6	6	DENSE, (5Y,5/1)GRAY SILT, WET	SM	N/A	PID=0 ppm α=0 ppm βΓ=60 cpm
18.5 19.0	114698 05/15/93 15:30		18	6	VERY STIFF, (5Y,5/1) GRAY, SILTY CLAY WITH SOME GRAVEL, LOW PLASTICITY, MOIST	CL	2.0	PID=0 ppm α=0 ppm βΓ=60 cpm
19.0 19.5	114699 05/15/93 15:30		21	6	HARD, SAA	CL	4.5	PID=0 ppm α=0 ppm βΓ=60 cpm

NOTES:
PROTECTIVE CASING IS SET, CONCRETE PAD TO BE INSTALLED AT A LATER DATE.

Boring Contractor: PENN DRILL
Driller: DAN JAMISON, DAN ARTHUR
Drilling Equipment: MOBILE, B-53 TRACK RIG

SAA = Same as Above
PID = Photoionization Detector
N/A = Not Applicable

PROJECT NUMBER: 602 3.2	PROJECT NAME: CRU2 RI PHASE I FIELD INVESTIGATION	
BORING NUMBER: 2042	COORDINATES: NORTH 480394.27 EAST 1379542.73	DATE:11-APR-88
GROUND ELEVATION: 572.8	GWL: Depth Date/Time	DATE STARTED: 11-APR-88
ENGINEER/GEOLOGIST: M. GOLDBERG	Depth Date/Time	DATE COMPLETE: 19-APR-88
DRILLING METHOD:		

DEPTH	SAMPLE	DATE TIME	BLOWS ON SAMPLE	RECOVERY INCHES		USCS SYMBOL	TSF	REMARKS
1.5	008867	04/11/88 08:45	2 3 6	14	VERY STIFF DARK YELLOWISH BROWN CLAY (10YR, 4/4) DRY.	CL	2.5	PID=0 ppm α=0 ppm βΓ=90 cpm
3.0	008868	04/11/88 08:50	6 10 9	14	VERY STIFF DARK BROWN CLAY (10YR, 3/3) DRY.	CL	2.5	PID=0 ppm α=0 ppm βΓ=90 cpm
4.5	008869	04/11/88 08:52	10 11 11	18	STIFF DARK YELLOWISH BROWN CLAY (10YR, 4/6), DRY.	CL	1.0	PID=0 ppm α=0 ppm βΓ=90 cpm
6.0	008870	04/11/88 08:55	8 8 8	8	STIFF DARK YELLOWISH BROWN CLAY (10YR, 4/6), DRY.	CL	1.0	PID=0 ppm α=0 ppm βΓ=90 cpm
7.5	008871	04/11/88 09:00	5 6 6	18	STIFF DARK YELLOWISH BROWN CLAY (10YR, 4/6) DRY. LOOSE YELLOWISH BROWN SILTY SAND (10YR, 5/8) WET. STIFF LIGHT GRAY SILTY CLAY (10YR, 7/1) WET.	CL SM CL	1.0 1.5	PID=0 ppm α=0 ppm βΓ=90 cpm
9.0	008872	04/11/88 09:03	6 6 7	18	STIFF LIGHT GRAY SILTY CLAY (10YR, 7/1), WET. TRACE SAND, WET.	CL	1.0	PID=0 ppm α=0 ppm βΓ=100 cpm
10.5	008873	04/11/88 09:05	6 8 10	18	STIFF LIGHT GRAY SILTY CLAY (10YR, 7/1) WET. TRACE SAND, WET.	CL CL	1.0 1.0	PID=0 ppm α=0 ppm βΓ=100 cpm
12.0	008490	04/11/88 13:55	4 7 6	12	STIFF LIGHT GRAY SILTY CLAY WITH SAND (10YR, 7/1), WET.	CL	1.0	PID=0 ppm α=0 ppm βΓ=100 cpm
13.5	008491	04/11/88 14:00	9 7 13	14	MEDIUM DENSE LIGHT GRAY SILTY SAND (10YR, 7/1) WET.	SM	N/A	PID=0 ppm α=0 ppm βΓ=100 cpm
15.0	008492	04/11/88 14:05	9 11 13	14	MEDIUM DENSE GRAY SILTY SAND (10YR, 5/1), WET.	SM	N/A	PID=0 ppm α=0 ppm βΓ=100 cpm
16.5	008493	04/11/88 14:10	11 12 15	18	MEDIUM DENSE GRAY SILTY SAND (10YR, 5/1), WET.	SM	<1	PID=0 ppm α=0 ppm βΓ=90 cpm
18.0	008494	04/11/88 14:15	8 9 9	18	MEDIUM DENSE GRAY SAND (10YR, 5/1) WET, TRACE SILT.	SP	<1	PID=0 ppm α=0 ppm βΓ=90 cpm
19.5	008495	04/11/88 15:35	3 3 3	10	STIFF GRAY CLAY (10YR, 5/1), WET, TRACE SAND.	CL	1.5	PID=0 ppm α=0 ppm βΓ=90 cpm

NOTES:

SAA = Same as Above
PID = Photoionization Detector
N/A = Not Applicable

PROJECT NUMBER: 602 3.2	PROJECT NAME: CRU2 RI PHASE I FIELD INVESTIGATION	
BORING NUMBER: 2042	COORDINATES: NORTH 480394.27 EAST 1379542.73	DATE:11-APR-88
GROUND ELEVATION: 572.8	GWL: Depth Date/Time	DATE STARTED: 11-APR-88
ENGINEER/GEOLOGIST: M. GOLDBERG	Depth Date/Time	DATE COMPLETE: 19-APR-88
DRILLING METHOD:		

DEPTH	SAMPLE	DATE TIME	BLOWS ON SAMPLE	RECOVERY INCHES		USCS SYMBOL	TSF	REMARKS
19.5 21.0	008496 04/11/88 15:40		10 15 11	8	MEDIUM DENSE GRAY SAND (10YR, 5/1) WET. HARD DARK GRAY CLAY (5Y, 4/1) DRY.	SW CL	<1 >4	PID=0 ppm α=0 ppm βΓ=90 cpm
22.0 23.5	008498 04/12/88 08:30		6 10 12	14	MEDIUM STIFF DARK GRAY CLAY (5Y, 4/1), DRY.	CL	1.0	PID=0 ppm α=0 ppm βΓ=90 cpm
23.5 25.0	008499 04/12/88 08:45		3 4 8	18	STIFF DARK GRAY CLAY (5Y, 4/1), DRY.	CL	2.0	PID=0 ppm α=0 ppm βΓ=100 cpm
25.0 26.5	008500 04/12/88 09:20		1 2 3	10	STIFF OLIVE GRAY CLAY (5Y, 5/2), TRACE GRAVEL, DRY.	CL	1.5	PID=0 ppm α=0 ppm βΓ=90 cpm
26.5 28.0	008501 04/12/88 09:40		10 13 16	14	VERY STIFF DARK GRAY CLAY (5Y, 4/1), TRACE GRAVEL, DRY.	CL	4.0	PID=0 ppm α=0 ppm βΓ=90 cpm
28.0 30.0	008502 04/12/88 09:50		10 16 21	20	VERY STIFF DARK GRAY CLAY (5Y, 4/1), TRACE GRAVEL, DRY.	CL	4.0	PID=0 ppm α=0 ppm βΓ=90 cpm
30.0 31.5	008503 04/12/88 10:20		8 13 50	18	HARD GRAY CLAY (5Y, 5/1), TRACE GRAVEL, DRY.	CL	>4.0	PID=0 ppm α=0 ppm βΓ=90 cpm
31.5 33.0	008504 04/12/88 10:30		15 14 21	18	VERY STIFF GRAY CLAY (5Y, 5/1), TRACE GRAVEL, DRY.	CL	3.0	PID=0 ppm α=0 ppm βΓ=90 cpm
33.0 34.5	008505 04/12/88 10:50		8 14 15	18	VERY STIFF GRAY CLAY (5Y, 5/1), TRACE GRAVEL, DRY.	CL	2.5	PID=0 ppm α=0 ppm βΓ=90 cpm
34.5 36.0	008506 04/12/88 13:20		8 12 14	18	VERY STIFF GRAY CLAY (5Y, 5/1), TRACE GRAVEL, DRY.	CL	2.0	PID=0 ppm α=0 ppm βΓ=90 cpm
36.0 37.5	008507 04/12/88 13:40		5 9 20	18	VERY STIFF GRAY CLAY (5Y, 5/1), TRACE GRAVEL, DRY. VERY STIFF DARK YELLOWISH BROWN CLAY (10YR, 4/6) DRY, TRACE GRAVEL.	CL CL	2.0 2.5	PID=0 ppm α=0 ppm βΓ=90 cpm
37.5 39.0	008508 04/12/88 14:00		10 16 50	10	VERY DENSE YELLOWISH BROWN SAND (10YR, 5/8), DRY.	SW	<1	PID=0 ppm α=0 ppm βΓ=90 cpm
45.0 46.5	008509 04/12/88 16:10		25 30 50	18	VERY DENSE YELLOWISH BROWN GRAVEL (10YR, 5/8), DRY. VERY DENSE YELLOWISH BROWN SAND (10YR, 5/8), DRY.	GW SW	<1 <1	PID=0 ppm α=0 ppm βΓ=80 cpm

NOTES:

SAA = Same as Above
PID = Photoionization Detector
N/A = Not Applicable

PROJECT NUMBER: 602 3.2	PROJECT NAME: CRU2 RI PHASE I FIELD INVESTIGATION	
BORING NUMBER: 2042	COORDINATES: NORTH 480394.27 EAST 1379542.73	DATE:11-APR-88
GROUND ELEVATION: 572.8	GWL: Depth Date/Time	DATE STARTED: 11-APR-88
ENGINEER/GEOLOGIST: M. GOLDBERG	Depth Date/Time	DATE COMPLETE: 19-APR-88
DRILLING METHOD:		

DEPTH	SAMPLE	DATE TIME	BLOWS ON SAMPLE	RECOVERY INCHES		USCS SYMBOL	TSF	REMARKS
50.0 51.5	008510 04/13/88 09:10		10 23 27	16	DENSE YELLOWISH BROWN SAND (10YR, 5/8), DRY.	SW	<1	PID=0 ppm α=0 ppm βΓ=80 cpm
55.0 56.5	008511 04/13/88 10:40		6 10 14	14	DENSE YELLOWISH BROWN SAND (10YR, 5/8), WET.	SW	<1	PID=0 ppm α=0 ppm βΓ=80 cpm
60.0 61.5	008512 04/13/88 11:10		12 17 23	18	DENSE YELLOWISH BROWN GRAVEL (10YR, 5/8), TRACE SAND, WET.	GW	<1	PID=0 ppm α=0 ppm βΓ=80 cpm
65.0 66.5	008513 04/13/88 14:30		18 16 19	16	DENSE YELLOWISH BROWN GRAVEL (10YR, 5/8), WET.	GW	<1	PID=0 ppm α=0 ppm βΓ=80 cpm

NOTES:

SAA = Same as Above
PID = Photoionization Detector
N/A = Not Applicable

PROJECT NUMBER: 20.03.05	PROJECT NAME: CRU2 RI PHASE II FIELD INVESTIGATION	
BORING NUMBER: 2935	COORDINATES: NORTH 480499.49 EAST 1379855.38	DATE:29-APR-93
GROUND ELEVATION: 579.19	GWL: Depth 57.5 Date/Time 13-May-93 15:45	DATE STARTED: 29-APR-93
ENGINEER/GEOLOGIST: P MCCARREN	Depth Date/Time	DATE COMPLETE: 08-MAY-93
DRILLING METHOD: CABLE TOOL		

DEPTH	SAMPLE	DATE TIME	BLOWS ON SAMPLE	RECOVERY INCHES		USCS SYMBOL	TSF	REMARKS
2.0	110788	04/29/93 09:00	4 10 10 8	3	STIFF, (10YR 5/6) YELLOWISH BROWN, SILTY CLAY, ROOT ZONE, LARGE GRAVELS, SOME COAL FRAGS, LOW PLASTICITY, MOIST	CL	2	PID=3.9 ppm α=0 ppm BΓ=40-60 cpm
2.0 4.0	110789 110790 110791 110811	04/29/93 09:20	6 10 10 13	18	VERY STIFF, (10YR 5/1 TO 5/6) GRAY TO YELLOWISH BROWN, SILTY CLAY, MOTTELING, LOW PLASTICITY, MOIST	CL	4	PID=13 ppm α=0 ppm BΓ=40-60 cpm
4.0 6.0	110792	04/29/93 09:30	6 11 11 14	18	SAA	CL	4	PID=19.2 ppm α=0 ppm BΓ=40-60 cpm
6.0 7.5	110793	04/29/93 09:40	3 3 5	4	STIFF, (10YR 4/4) DARK YELLOWISH BROWN, SILTY CLAY, SOME SAND, MEDIUM PLASTICITY, MOIST TO WET AT BOTTOM OF SPOON	CL	2	PID=0 ppm α=0 ppm BΓ=40-60 cpm
7.5 9.0	110794	04/29/93 13:20	4 6 9	18	STIFF, (2.5Y 5/4) LIGHT OLIVE BROWN, SILTY CLAY, MOTTELING TRACE FINE SAND, MEDIUM PLASTICITY, MOIST TO WET, VERY FINE SAND LENS, WET, AT 8.0-8.25	CL	2	PID=0 ppm α=0 ppm BΓ=40-60 cpm
9.0 10.5	110795	04/30/93 10:55	7 11 11	16	STIFF, (2.5Y 5/4) LIGHT OLIVE BROWN, SILTY CLAY TO CLAYEY SILT, MOTTELING, FE STAINING, TRACE FINE SAND, LOW TO MEDIUM PLASTICITY, MOIST	CL ML	2.5	PID=0 ppm α=0 ppm BΓ=40-60 cpm
10.5 12.0	110796	04/30/93 13:35	10 13 13	18	VERY STIFF, (2.5Y 5/4) LIGHT OLIVE BROWN, CLAYEY, SILT, MOTTELING, FE STAINING, TRACE FINE SAND, MEDIUM PLASTICITY, MOIST-LAST 1"(2.5Y 5/1)GRAY CLAY, HIGH PLASTICITY	ML	4	PID=0 ppm α=0 ppm BΓ=40-60 cpm
12.0 13.5	110797	04/30/93 14:00	2 5 6	16	STIFF, (2.5Y 5/1) GRAY CLAY, (LACUSTRINE) VARYING, HIGH PLASTICITY, MOIST	CH	2.5	PID=0 ppm α=0 ppm BΓ=40-60 cpm
13.5 15.0	110798	04/30/93 14:10	5 7 9	16	SAA	CH	2.5	PID=0 ppm α=0 ppm BΓ=40-60 cpm
15.0 16.5	110799	04/30/93 15:50	1 4 4	16	SAA	CH	2	PID=0 ppm α=0 ppm BΓ=40-60 cpm
16.5 18.0	110800	04/30/93 15:55	3 3 4	14	SAA	CH	2	PID=0 ppm α=0 ppm BΓ=40-60 cpm

NOTES:
CEMENT PLACED FROM 0.0 TO 1.0 TO HOLD PROTECTIVE PIPE
IN PLACE WATER LEVEL051393 57.5 BELOW GROUND SURFACE

Driller: BOB ERICKSON, RICHARD THOMS
Drilling Equipment: BUCYRUS-ERIE

SAA = Same as Above
PID = Photoionization Detector
N/A = Not Applicable

PROJECT NUMBER: 20.03.05	PROJECT NAME: CRU2 RI PHASE II FIELD INVESTIGATION	
BORING NUMBER: 2935	COORDINATES: NORTH 480499.49 EAST 1379855.38	DATE:29-APR-93
GROUND ELEVATION: 579.19	GWL: Depth 57.5 Date/Time 13-May-93 15:45	DATE STARTED: 29-APR-93
ENGINEER/GEOLOGIST: P MCCARREN	Depth Date/Time	DATE COMPLETE: 08-MAY-93
DRILLING METHOD: CABLE TOOL		

DEPTH	SAMPLE / DATE / TIME	BLOWS ON SAMPLE	RECOVERY INCHES		USCS SYMBOL	TSF	REMARKS
18.0 19.5	110801 04/30/93 16:15	1 3 4	8	SAA	CH	2	PID=0 ppm α=0 ppm BΓ=40-60 cpm
19.5 21.0	110802 04/30/93 16:20	2 16 19	18	0-12" STIFF, (2.5Y 5/1)GRAY, CLAY, VARYING, HIGH PLASTICITY, MOIST, 12-18" STIFF, (2.5Y 5/1) GRAY, CLAYEY SILT, SLIGHT PLASTICITY, SMALL MEDIUM TO FINE SAND LENS	CH ML	2 2.5	PID=0 ppm α=0 ppm BΓ=40-60 cpm
21.0 22.5	110803 05/01/93 08:15	1 1 7	6	STIFF, (2.5Y 5/1) GRAY CLAYEY SILT, SLIGHT PLASTICITY, MEDIUM TO FINE SAND, MOIST	ML	2.5	PID=0 ppm α=0 ppm BΓ=40-60 cpm
22.5 24.0	110804 05/01/93 08:20	17 13 14	12	STIFF, (2.5Y 5/1) GRAY CLAYEY SILT, SLIGHT PLASTICITY, SMALL MEDIUM TO FINE SAND LENSES, SOME SMALL GRAVELS, IN SILT AND SAND, MOIST	ML	2.5	PID=0 ppm α=0 ppm BΓ=40-60 cpm
24.0 25.5	110805 05/01/93 09:20	1 3 5	6	STIFF, (2.5Y 4/1) DARK GRAY CLAYEY SILT, SOME FINE TO MEDIUM SAND, SOME SMALL GRAVELS 10-30 MM, LOW PLASTICITY, MOIST	ML	2.5	PID=0 ppm α=0 ppm BΓ=40-60 cpm
25.5 27.0	110806 05/01/93 09:25	7 12 13	6	SAA	ML	2.5	PID=0 ppm α=0 ppm BΓ=40-60 cpm
27.0 28.5	110807 05/01/93 13:20	5 22 25	8	HARD, (2.5Y 5/1) GRAY SILTY CLAY, SOME FINE TO MEDIUM SAND, SOME SMALL GRAVELS, 10-30 MM, LOW PLASTICITY, MOIST	CL	4.5	PID=0 ppm α=0 ppm BΓ=40-60 cpm
28.5 30.0	110808 05/01/93 14:20	25 35 100	18	0-14" HARD, (2.5Y 5/1) GRAY SILTY CLAY, SOME FINE TO MEDIUM SAND, SOME SMALL GRAVELS, LOW PLASTICIT, MOIST, 14-16" VERY DENSE, (10YR 4/6) DARK YELLOWISH BROWN, SILT WITH FE STAINS, MOIST, 16-18" (10YR 4/6) DARK YELLOWISH BROWN, MEDIUM SAND, MOIST	CL ML SM	4.5	PID=0 ppm α=0 ppm BΓ=40-60 cpm
30.0 31.5	110809 05/01/93 15:15	34 37 41	16	VERY DENSE, (10YR 4/6) DARK YELLOWISH BROWN, FINE TO COARSE SILTY SAND, POORLY SORTED, FE STAINING, DAMP	SM	N/A	PID=0 ppm α=0 ppm BΓ=40-60 cpm
35.0 36.5	110810 05/01/93 16:30	18 27 34	14	VERY DENSE, (10YR 4/6) DARK YELLOWISH BROWN, FINE TO MEDIUM SILTY SAND, POORLY SORTED, FE STAINING SOME BEDDING PRESENT, DRY	SM	N/A	PID=0 ppm α=0 ppm BΓ=40-60 cpm
40.0 41.5	110812 05/02/93 09:25	15 34 48	11	VERY DENSE, (2.5Y 6/6) OLIVE YELLOW, POORLY GRADED, FINE SAND, DRY	SP	N/A	PID=0 ppm α=0 ppm BΓ=40-60 cpm
45.0 46.5	110813 05/02/93 10:35	50	6	VERY DENSE, (2.5Y 5/4) LIGHT OLIVE BROWN, POORLY GRADED SAND, SOME GRAVELS, DRY	SP	N/A	PID=0 ppm α=0 ppm BΓ=40-60 cpm

NOTES:
CEMENT PLACED FROM 0.0 TO 1.0 TO HOLD PROTECTIVE PIPE
IN PLACE WATER LEVEL051393 57.5 BELOW GROUND SURFACE

Driller: BOB ERICKSON, RICHARD THOMS
Drilling Equipment: BUCYRUS-ERIE

SAA = Same as Above
PID = Photoionization Detector
N/A = Not Applicable

001044

PROJECT NUMBER: 20.03.05	PROJECT NAME: CRU2 RI PHASE II FIELD INVESTIGATION	
BORING NUMBER: 2935	COORDINATES: NORTH 480499.49 EAST 1379855.38	DATE:29-APR-93
GROUND ELEVATION: 579.19	GWL: Depth 57.5 Date/Time 13-May-93 15:45	DATE STARTED: 29-APR-93
ENGINEER/GEOLOGIST: P MCCARREN	Depth Date/Time	DATE COMPLETE: 08-MAY-93
DRILLING METHOD: CABLE TOOL		

DEPTH	SAMPLE	DATE TIME	BLOWS ON SAMPLE	RECOVERY INCHES		USCS SYMBOL	TSF	REMARKS
50.0 51.5	110814	05/02/93 14:25	50	1	VERY DENSE, (2.5Y 5/4) LIGHT OLIVE BROWN, POORLY GRADED SAND, SOME GRAVELS, MOIST	SP	N/A	PID=0 ppm α=0 ppm βΓ=40 cpm
55.0 56.5	110815	05/03/93 13:35	14 30 30	4	SAA	SP	N/A	PID=0 ppm α=0 ppm βΓ=40-60 cpm
56.5 58.0	110816	05/03/93 13:55	40 50 50	16	0-10" VERY DENSE, (2.5Y 5/4) LIGHT OLIVE BROWN, MEDIUM TO FINE SAND POORLY GRADED, SOME GRAVELS, MOIST, 10-16" VERY DENSE, (10YR 4/1) DARK GRAY, COARSE, MEDIUM AND FINE SAND AND SOME GRAVELS, WET-WATER TABLE	SP SM	N/A	PID=0 ppm α=0 ppm βΓ=40-60 cpm
58.0 59.5	110817	05/03/93 14:20	25 20 20	14	DENSE, (2.5Y 5/4) LIGHT OLIVE BROWN, MEDIUM TO FINE SAND AND SOME GRAVELS, WET	SM	N/A	PID=0 ppm α=0 ppm βΓ=40-60 cpm
59.5 61.0	110818	05/03/93 14:55	11 15 20	14	0-10" SAA, 10-14" DENSE, (2.5Y 5/4) LIGHT OLIVE BROWN, FINE SAND, WITH MEDIUM TO COARSE SAND, WET	SM SP	N/A	PID=0 ppm α=0 ppm βΓ=40-60 cpm
61.0 62.5	110819	05/03/93 15:10	16 18 20	16	SAA	SP	N/A	PID=0 ppm α=0 ppm βΓ=40-60 cpm
62.5 64.0	110820	05/03/93 15:40	11 15 15	16	SAA	SP	N/A	PID=0 ppm α=0 ppm βΓ=40-60 cpm
64.0 65.5	110821	05/03/93 15:50	11 21 24	16	SAA	SP	N/A	PID=0 ppm α=0 ppm βΓ=40-60 cpm
65.5 67.0	110822	05/05/93 08:15	6 6 12	18	SAA	SP	N/A	PID=0 ppm α=0 ppm βΓ=60-110 cpm
67.0 68.5	110823	05/05/93 08:30	12 24 30	18	VERY DENSE, (2.5Y 5/4) LIGHT OLIVE BROWN, FINE SAND, WITH MEDIUM TO COARSE SAND AND SOME GRAVELS, WET	SP	N/A	PID=0 ppm α=0 ppm βΓ=60-120 cpm
68.5 70.0	110824	05/05/93 08:45	20 30 27	16	SAA	SP	N/A	PID=0 ppm α=0 ppm βΓ=60-120 cpm

NOTES:
CEMENT PLACED FROM 0.0 TO 1.0 TO HOLD PROTECTIVE PIPE
IN PLACE WATER LEVEL051393 57.5 BELOW GROUND SURFACE

Driller: BOB ERICKSON, RICHARD THOMS
Drilling Equipment: BUCYRUS-ERIE

SAA = Same as Above
PID = Photoionization Detector
N/A = Not Applicable

PROJECT NUMBER: 20.03.05	PROJECT NAME: CRU2 RI PHASE II FIELD INVESTIGATION	
BORING NUMBER: 2936	COORDINATES: NORTH 480677.56 EAST 1379862.08	DATE:29-APR-93
GROUND ELEVATION: 579.6	GWL: Depth 59.05 Date/Time 14-May-93 11:00	DATE STARTED: 29-APR-93
ENGINEER/GEOLOGIST: K PAYNE	Depth Date/Time	DATE COMPLETE: 14-MAY-93
DRILLING METHOD: CABLE TOOL		

DEPTH	SAMPLE / DATE / TIME	BLOWS ON SAMPLE	RECOVERY INCHES		USCS SYMBOL	TSF	REMARKS
2.0	110939 04/29/93 13:35	3 6 12 15	15	HARD, (2.5Y, 5/4) LIGHT OLIVE BROWN, CLAY WITH TRACE GRAVEL, NON-PLASTIC, SLIGHTLY MOIST, FILL	CL	4.5	PID=.8 ppm α=0 ppm BΓ=90 cpm
2.0 4.0	110940 04/29/93 13:45	17 15 13 14	24	MEDIUM DENSE, (2.5Y, 5/4) LIGHT OLIVE BROWN, POORLY GRADED FINE CLAYEY SAND MIXTURE, WITH TRACE GRAVEL, NON-PLASTIC, SLIGHTLY MOIST, FILL	SC	N/A	PID=.8 ppm α=0 ppm BΓ=90 cpm
3.0 4.5	110739 04/12/93 14:30	13 18 18	11	HARD, LIGHT OLIVE BROWN, (2.5Y, 5/4), SILTY SANDY CLAY WITH ROCK FRAGMENTS AND PEBBLES, LOW PLASTICITY, SLIGHTLY MOIST	CL	4.5	PID=5 ppm α=0 ppm BΓ=80 cpm
4.0 6.0	110941 04/29/93 13:55	9 12 18 3	24	SAA	SC	N/A	PID=.6 ppm α=0 ppm BΓ=90 cpm
6.0 7.5	110945 04/29/93 14:20	2 4 6	14	LOOSE, (2.5Y, 5/4) LIGHT OLIVE BROWN, POORLY GRADED FINE CLAYEY SAND MIXTURE, NON-PLASTIC, SLIGHTLY MOIST, FILL	SC	N/A	PID=1.7 ppm α=0 ppm BΓ=80 cpm
7.5 9.0	110946 04/29/93 14:22	3 5 6	15	STIFF, (2.5Y, 5/3) LIGHT OLIVE BROWN, CLAY, LOW PLASTICITY, MOIST	CL	1.5	PID=2.3 ppm α=0 ppm BΓ=80 cpm
9.0 10.5	110947 04/29/93 14:30	3 6 5	12	SAA	CL	1.5	PID=1.7 ppm α=0 ppm BΓ=80 cpm
10.5 12.0	110948 04/29/93 14:33	3 5 5	14	STIFF, (7.5YR, 5/6) STRONG BROWN, CLAYEY SAND MIXTURE, NON-PLASTIC, MOIST	SC	1	PID=1.6 ppm α=0 ppm BΓ=80 cpm
12.0 13.5	110949 04/29/93 14:35	6 11 15	6	MEDIUM DENSE, (2.5Y, 6/3) LIGHT YELLOWISH BROWN, SILTY SAND, NON-PLASTIC, WET	SM	N/A	PID=2.4 ppm α=0 ppm BΓ=80 cpm
13.5 15.0	110950 04/29/93 14:40	12 15 17	16	DENSE, (2.5Y, 6/3) LIGHT YELLOWISH BROWN, POORLY GRADED MEDIUM SAND, NON-PLASTIC, WET	SP	N/A	PID=11.2 ppm α=0 ppm BΓ=100 cpm
15.0 16.5	110951 05/05/93 10:40	5 6 9	15	VERY STIFF, (5Y, 5/2) OLIVE GRAY, SILTY CLAY WITH TRACE GRAVEL, MOIST, SLIGHT PLASTICITY	CL	2.5	PID=0 ppm α=0 ppm BΓ=60 cpm
16.5 18.0	110952 05/05/93 11:00	6 9 10	7	STIFF, (5Y, 5/2) OLIVE GRAY, SILTY CLAY, LOW PLASTICITY, MOIST	CL	2	PID=0 ppm α=0 ppm BΓ=60 cpm

NOTES:
CEMENT WASS PLACED FROM 0-.6 FT TO KP 5-14-93 HOLD THE PROTECTIVE COVER IN PLACE.

Driller: BOB JOHNSON
Drilling Equipment: CYCLONE 42

SAA = Same as Above
PID = Photoionization Detector
N/A = Not Applicable

PROJECT NUMBER: 20.03.05	PROJECT NAME: CRU2 RI PHASE II FIELD INVESTIGATION	
BORING NUMBER: 2936	COORDINATES: NORTH 480677.56 EAST 1379862.08	DATE:29-APR-93
GROUND ELEVATION: 579.6	GWL: Depth 59.05 Date/Time 14-May-93 11:00	DATE STARTED: 29-APR-93
ENGINEER/GEOLOGIST: K PAYNE	Depth Date/Time	DATE COMPLETE: 14-MAY-93
DRILLING METHOD: CABLE TOOL		

DEPTH	SAMPLE / DATE / TIME	BLOWS ON SAMPLE	RECOVERY INCHES		USCS SYMBOL	TSF	REMARKS
18.0 19.5	110953 05/05/93 11:10	4 4 10	10	STIFF, (5Y, 5/2) OLIVE GRAY, SILTY CLAY, LOW PLASTICITY, MOIST	CL	2	PID=0 ppm α=0 ppm βΓ=70 cpm
19.5 21.0	110954 05/05/93 14:00	10 11 10	8	MEDIUM DENSE, (5Y, 4/2) OLIVE GRAY, SILTY SAND, VERY MOIST	SM	N/A	PID=0 ppm α=0 ppm βΓ=70 cpm
21.0 22.5	110955 05/05/93 14:15	8 3 4	6	LOOSE, (5Y, 5/1) GRAY, SILTY SAND, WET	SM	N/A	PID=0 ppm α=0 ppm βΓ=80 cpm
22.5 24.0	05/05/93 14:30	9 8 5	N/A	NO RECOVERY-2 SPOONS DRIVEN	N/A	N/A	
24.0 25.5	110956 05/06/93 09:00	65 21 9	7	MEDIUM DENSE, (5Y, 5/2) OLIVE GRAY, SILTY GRAVEL, WET	GM	N/A	PID=2.6 ppm α=0 ppm βΓ=70 cpm
25.5 27.0	110957 05/06/93 09:15	7 8 7	5	SAA	GM	N/A	PID=0 ppm α=0 ppm βΓ=80 cpm
27.0 28.5	110958 05/06/93 09:30	6 6 5	6	SOFT, (5Y, 5/2) OLIVE GRAY, SANDY CLAY, SLIGHT PLASTICITY, WET	CL	1	PID=0 ppm α=0 ppm βΓ=70 cpm
28.5 30.0	110959 05/06/93 09:40	6 21 50	7	VERY DENSE, (5Y, 5/2) OLIVE GRAY, WELL GRADED GRAVEL, WET	GW	N/A	PID=0 ppm α=0 ppm βΓ=70 cpm
30.0 31.5	110960 05/06/93 10:15	21 35 50	8	VERY DENSE, (5Y, 5/2) OLIVE GRAY, SANDY SILT, NON-PLASTIC, VERY MOIST	ML	N/A	PID=0 ppm α=0 ppm βΓ=80 cpm
31.5 33.0	110961 05/06/93 10:30	24 37 50	12	VERY DENSE, (5Y, 4/2) OLIVE GRAY, SANDY SILT, NON-PLASTIC, VERY MOIST	ML	N/A	PID=0 ppm α=0 ppm βΓ=80 cpm
33.0 34.5	110962 05/06/93 10:50	22 35 37	14	VERY DENSE, (5Y, 5/1) GRAY, SILTY SAND, WET, NON-PLASTIC	SM	N/A	PID=0 ppm α=0 ppm βΓ=60 cpm
34.5 36.0	110963 05/06/93 13:45	7 9 12	9	MEDIUM DENSE, (5Y, 5/1) GRAY, CLAYEY SILT, MOIST, NON-PLASTIC	ML	N/A	PID=0 ppm α=0 ppm βΓ=70 cpm
36.0 37.5	110964 05/06/93 14:05	7 7 9	8	MEDIUM DENSE, (5Y, 5/1) GRAY, CLAYEY SILT, MOIST, NON-PLASTIC	ML	N/A	PID=0 ppm α=0 ppm βΓ=60 cpm

NOTES:
CEMENT WASS PLACED FROM 0-.6 FT TO KP 5-14-93 HOLD THE PROTECTIVE COVER IN PLACE.

Driller: BOB JOHNSON
Drilling Equipment: CYCLONE 42

SAA = Same as Above
PID = Photoionization Detector
N/A = Not Applicable

PROJECT NUMBER: 20.03.05	PROJECT NAME: CRU2 RI PHASE II FIELD INVESTIGATION	
BORING NUMBER: 2936	COORDINATES: NORTH 480677.56 EAST 1379862.08	DATE:29-APR-93
GROUND ELEVATION: 579.6	GWL: Depth 59.05 Date/Time 14-May-93 11:00	DATE STARTED: 29-APR-93
ENGINEER/GEOLOGIST: K PAYNE	Depth Date/Time	DATE COMPLETE: 14-MAY-93
DRILLING METHOD: CABLE TOOL		

DEPTH	SAMPLE	DATE TIME	BLOWS ON	SAMPLE	RECOVERY INCHES		USCS SYMBOL	TSF	REMARKS
37.5 39.0	110965	05/06/93 14:20	6 7 9		10	MEDIUM DENSE, (5Y, 4/1) DARK GRAY, CLAYEY SILT, NON-PLASTIC, MOIST, ORGANICS	ML	N/A	PID=0 ppm α=0 ppm BΓ=60 cpm
39.0 40.5	110966	05/06/93 15:30	17 19 16		8	DENSE, (2.5Y, 5/4) LIGHT OLIVE BROWN, POORLY GRADED, FINE SAND, SLIGHTLY MOIST	SP	N/A	PID=0 ppm α=0 ppm BΓ=60 cpm
40.5 42.0	110967	05/06/93 15:40	19 21 29		8	VERY DENSE, (2.5Y, 5/4) LIGHT OLIVE BROWN, POORLY GRADED, FINE SAND, SLIGHTLY MOIST	SP	N/A	PID=0 ppm α=0 ppm BΓ=60 cpm
42.0 45.0		05/06/93 15:40	N/A		N/A	NO SAMPLES TAKEN SAMPLES TO BE TAKEN EVERY 5' STARTING AT 45.0'	N/A	N/A	
45.0 46.5	110968	05/06/93 16:00	29 39 45		10	VERY DENSE, (2.5Y, 5/4) LIGHT OLIVE BROWN, WELL GRADED SAND WITH TRACE GRAVEL, DRY	SW	N/A	PID=0 ppm α=0 ppm BΓ=60 cpm
50.0 51.5	110969	05/10/93 10:05	8 16 29		8	DENSE, (2.5Y, 6/3) LIGHT YELLOWISH BROWN, POORLY GRADED FINE SAND, DRY	SP	N/A	PID=.4 ppm α=0 ppm BΓ=50 cpm
53.0 54.5	110970	05/10/93 10:30	19 34 50		10	VERY DENSE, (10YR, 4/6) DARK YELLOWISH BROWN, WELL GRADED GRAVELY SAND, DRY	SW	N/A	PID=0 ppm α=0 ppm BΓ=60 cpm
54.5 56.0	110971	05/10/93 13:40	19 29 31		8	VERY DENSE, (2.5Y, 5/4) LIGHT OLIVE BROWN, WELL GRADED, GRAVELY SAND, DRY	SW	N/A	PID=0 ppm α=0 ppm BΓ=60 cpm
56.0 57.5	110972	05/10/93 15:10	41 50		6	VERY DENSE, (10YR, 5/3) BROWN, WELL GRADED, SILTY SAND, WET	SM	N/A	PID=0 ppm α=0 ppm BΓ=80 cpm
57.5 59.0	110973	05/10/93 15:30	4 9 19		9	MEDIUM DENSE,(2.5Y, 5/2) GRAYISH BROWN, POORLY GRADED FINE SAND, WET	SP	N/A	PID=0 ppm α=0 ppm BΓ=80 cpm
59.0 60.5	110974	05/10/93 15:45	10 11 13		14	MEDIUM DENSE, (5Y, 4/2) OLIVE GRAY, POORLY GRADED FINE SAND, WET	SP	N/A	PID=0 ppm α=0 ppm BΓ=60 cpm
60.5 62.0	110975	05/10/93 16:00	7 11 9		17	SAA	SP	N/A	PID=0 ppm α=0 ppm BΓ=40 cpm
62.0 63.5	110976	05/10/93 16:15	13 13 17		18	MEDIUM DENSE, (5Y, 4/2) OLIVE GRAY, WELL GRADED, MEDIUM TO FINE SAND, WET	SW	N/A	PID=0 ppm α=0 ppm BΓ=60 cpm

NOTES:
CEMENT WASS PLACED FROM 0-.6 FT TO KP 5-14-93 HOLD THE PROTECTIVE COVER IN PLACE.

Driller: BOB JOHNSON
Drilling Equipment: CYCLONE 42

SAA = Same as Above
PID = Photoionization Detector
N/A = Not Applicable

PROJECT NUMBER: 20.03.05	PROJECT NAME: CRU2 RI PHASE II FIELD INVESTIGATION	
BORING NUMBER: 2936	COORDINATES: NORTH 480677.56 EAST 1379862.08	DATE:29-APR-93
GROUND ELEVATION: 579.6	GWL: Depth 59.05 Date/Time 14-May-93 11:00	DATE STARTED: 29-APR-93
ENGINEER/GEOLOGIST: K PAYNE	Depth Date/Time	DATE COMPLETE: 14-MAY-93
DRILLING METHOD: CABLE TOOL		

DEPTH	SAMPLE	DATE TIME	BLOWS ON SAMPLE	RECOVERY INCHES		USCS SYMBOL	TSF	REMARKS
63.5 65.0	110977 05/10/93 16:25		11 13 12	18	MEDIUM DENSE, (5Y, 4.3) OLIVE, POORLY GRADED, MEDIUM SAND, WET	SP	N/A	PID=0 ppm α=0 ppm βΓ=80 cpm
65.0 66.5	110978 05/11/93 10:05		22 35 39	12	VERY DENSE, (5Y, 4.2) OLIVE GRAY, POORLY GRADED FINE SAND, WET	SP	N/A	PID=1.9 ppm α=0 ppm βΓ=40 cpm
66.5 68.0	110979 05/11/93 10:25		20 22 50	17	VERY DENSE, (5Y, 4/2) OLIVE GRAY, POORLY GRADED, FINE SAND, WET	SP	N/A	PID=0 ppm α=0 ppm βΓ=80 cpm

NOTES:
CEMENT WASS PLACED FROM 0-.6 FT TO KP 5-14-93 HOLD THE PROTECTIVE COVER IN PLACE.

Driller: BOB JOHNSON
Drilling Equipment: CYCLONE 42

SAA = Same as Above
PID = Photoionization Detector
N/A = Not Applicable

PROJECT NUMBER: 20.03.05	PROJECT NAME: CRU2 RI PHASE II FIELD INVESTIGATION	
BORING NUMBER: 2939	COORDINATES: NORTH 480671.47 EAST 1379531.05	DATE:15-MAY-93
GROUND ELEVATION: 576.6	GWL: Depth 54.1 Date/Time	DATE STARTED: 15-MAY-93
ENGINEER/GEOLOGIST: D MCCARREN	Depth Date/Time	DATE COMPLETE: 27-MAY-93
DRILLING METHOD: CABLE TOOL		

DEPTH	SAMPLE / DATE / TIME	BLOWS ON SAMPLE	RECOVERY INCHES		USCS SYMBOL	TSF	REMARKS
2.0	110826 05/15/93 09:30	2 4 6 9	18	HARD, (10YR 5/6) YELLOWISH BROWN, SILTY CLAY, SOME MOTTELING, MEDIUM PLASTICITY, MOIST	CL	4	PID=0 ppm α=0 ppm BΓ=60-80 cpm
2.0 4.0	110827 110828 05/15/93 09:40	30 15 16 16	18	HARD, (2.5Y 5/4) LIGHT OLIVE BROWN, SILTY CLAY, SOME MOTTELING, MEDIUM PLASTICITY, MOIST	CL	4.5	PID=0 ppm α=0 ppm BΓ=60-80 cpm
4.0 6.0	110829 05/15/93 09:45	12 17 15 14	18	SAA	CL	4.5	PID=4 ppm α=0 ppm BΓ=60-80 cpm
6.0 7.5	110830 05/15/93 09:50	12 10 7	16	VERY STIFF, (2.5Y 5/2) GRAYISH BROWN, SILTY CLAY, SOME MOTTELING, OXIDE STAINING, SOME VERY FINE SAND, MEDIUM PLASTICITY, MOIST	CL	4	PID=0 ppm α=0 ppm BΓ=60-80 cpm
7.5 9.0	110831 05/15/93 09:55	7 9 8	18	0-15" SAA-GRAVEL ZONE AT 4-6" WET.MICROTIP 2.9 PPM.15-18" STIFF, (2.5Y 5/1) GRAY CLAY, LACUSTRINE, VARIUM, HIGH PLASTICITY, MOIST	CL CH	4 3	PID=0.0 ppm α=0 ppm BΓ=60-80 cpm
9.0 10.5	110832 05/15/93 13:35	7 12 12	12	STIFF, (2.5Y 5/1) GRAY CLAY, LACUSTRINE, VARVING INCREASING SILT, HIGH PLASTICITY, MOIST	CH	3	PID=0 ppm α=0 ppm BΓ=60-80 cpm
10.5 12.0	110833 05/15/93 13:40	6 12 15	16	0-4" SAA, 4"-16" SOFT, (2.5Y 4/1) DARK GRAY, SILT, CARBONIZED PLANT FIBERS, WET	CH ML	.5	PID=0 ppm α=0 ppm BΓ=60-80 cpm
12.0 13.5	110834 05/15/93 13:55	12 12 15	8	SOFT, (2.5Y 4/1) DARK GRAY, SILT, WITH INCREASING FINR SAND,CARBONIZED PLANT FIBERS, WET	ML	.5	PID=0 ppm α=0 ppm BΓ=60-80 cpm
13.5 15.0	110835 05/15/93 14:00	5 12 11	8	0-4" SAA, 4-8" SOFT (2.5Y 4/1) DARK GRAY, SILT WITH VERY FINE SAND, CARBONIZED PLANT FIBERS, LAMINAE, WET	ML	.5	PID=0 ppm α=0 ppm BΓ=60-80 cpm
15.0 16.5	110836 05/15/93 14:25	1 3 5	6	SAA	ML CL	.5	PID=0 ppm α=0 ppm BΓ=60-80 cpm
16.5 18.0	110837 05/15/93 14:35	1 11 7	6	VERY STIFF, (2.5Y 5/2) GRAYISH BROWN, SILTY CLAY, SOME SMALL GRAVELS, MEDIUM PLASTICITY, MOIST	CL	3.5	PID=0 ppm α=0 ppm BΓ=60-80 cpm
18.0 19.5	114627 05/15/93 14:45	12 15 12	6	SAA	CL	3.5	PID=0 ppm α=0 ppm BΓ=60-80 cpm

NOTES:
CEMENT PLACED FROM 0 TO 1 FT TO HOLD PROTECTIVE PIPE IN PLACE WATER LEVEL 5-27-93 54.1 BELOW GROUNDSURFACE

Boring Contractor: PENNSYLVANIA DRILLING
Driller: BOB ERICKSON
Drilling Equipment: BUCYRUS-ERIE

SAA = Same as Above
PID = Photoionization Detector
N/A = Not Applicable

PROJECT NUMBER: 20.03.05	PROJECT NAME: CRU2 RI PHASE II FIELD INVESTIGATION	
BORING NUMBER: 2939	COORDINATES: NORTH 480671.47 EAST 1379531.05	DATE:15-MAY-93
GROUND ELEVATION: 576.6	GWL: Depth 54.1 Date/Time	DATE STARTED: 15-MAY-93
ENGINEER/GEOLOGIST: D MCCARREN	Depth Date/Time	DATE COMPLETE: 27-MAY-93
DRILLING METHOD: CABLE TOOL		

DEPTH	SAMPLE	DATE TIME	BLOWS ON SAMPLE	RECOVERY INCHES		USCS SYMBOL	TSF	REMARKS
19.5 21.0	114628 05/15/93 16:10		6 10 10	14	VERY STIFF, (2.5Y 4/1) DARK GRAY, SILTY CLAY, SOME SMALL WEATHERED GRAVELS, MEDIUM PLASTICITY, MOIST, -GRAVEL ZONE AT 10" SMALL GRAVELS, WET	CL	3.5	PID=0 ppm α=0 ppm BΓ=60-80 cpm
21.0 22.5	114629 05/15/93 16:30		12 12 12	12	SAA	CL	3	PID=0 ppm α=0 ppm BΓ=60-80 cpm
22.5 24.0	114680 05/15/93 16:40		7 7 10	18	SAA	CL	3	PID=0 ppm α=0 ppm BΓ=60-80 cpm
24.0 25.5	114631 05/16/93 09:10		11 12 30	4	VERY STIFF, (2.5Y 4/1) DARK GRAY, SILTY CLAY, SOME FINE SAND, SOME SMALL WEATHERED GRAVELS, MEDIUM PLASTICITY, MOIST-LARGE GRAVEL AT BOTTOM OF SPOON	CL	3	PID=3.6 ppm α=0 ppm BΓ=60-80 cpm
25.5 27.0	114632 05/16/93 09:20		12 50	8	SAA	CL	4	PID=0 ppm α=0 ppm BΓ=60-80 cpm
27.0 28.5	114633 05/16/93 14:25		1 3 20	4	SAA	CL	3.5	PID=0 ppm α=0 ppm BΓ=60-80 cpm
28.5 30.0	114634 05/16/93 14:30		70	18	SAA	CL	4.25	PID=0 ppm α=0 ppm BΓ=60-80 cpm
31.5 33.0	114635 05/17/93 09:45		1 7 19	4	SAA	CL	4.5	PID=0 ppm α=0 ppm BΓ=60-80 cpm
33.0 34.5	114636 05/17/93 10:45		32 34 30	4	SAA	CL	4.5	PID=0 ppm α=0 ppm BΓ=60-80 cpm
34.5 36.0	114637 05/17/93 13:35		20 23 20	6	0-2" SAA, 2-6" DENSE, (10YR 5/4) YELLOWISH BROWN, MEDIUM TO FINE SILTY SAND, MOIST	CL SM	4	PID=0 ppm α=0 ppm BΓ=60-80 cpm
36.0 37.5	114638 05/15/93 13:40		21 41 49	18	SAA	SM	N/A	PID=0 ppm α=0 ppm BΓ=60-80 cpm
40.0 41.5	114639 05/17/93 14:35		50 50	8	VERY DENSE, (10YR 5/4) YELLOWISH BROWN, MEDIUM TO FINE SILTY SAND, OXIDE STAINING, SOME LARGE GRAVELS, DRY	SM	N/A	PID=0 ppm α=0 ppm BΓ=60-80 cpm
45.0 46.5	114640 05/17/93 15:35		4 35 47	12	SAA	SM	N/A	PID=0 ppm α=0 ppm BΓ=60-80 cpm

NOTES:
CEMENT PLACED FROM 0 TO 1 FT TO HOLD PROTECTIVE PIPE IN PLACE WATER LEVEL 5-27-93 54.1 BELOW GROUNDSURFACE

Boring Contractor: PENNSYLVANIA DRILLING
Driller: BOB ERICKSON
Drilling Equipment: BUCYRUS-ERIE

SAA = Same as Above
PID = Photoionization Detector
N/A = Not Applicable

PROJECT NUMBER: 20.03.05	PROJECT NAME: CRU2 RI PHASE II FIELD INVESTIGATION	
BORING NUMBER: 2939	COORDINATES: NORTH 480671.47 EAST 1379531.05	DATE:15-MAY-93
GROUND ELEVATION: 576.6	GWL: Depth 54.1 Date/Time	DATE STARTED: 15-MAY-93
ENGINEER/GEOLOGIST: D MCCARREN	Depth Date/Time	DATE COMPLETE: 27-MAY-93
DRILLING METHOD: CABLE TOOL		

DEPTH	SAMPLE	DATE TIME	BLOWS ON	SAMPLE	RECOVERY	INCHES		USCS	SYMBOL	TSF	REMARKS
50.0 51.5	114641 05/17/93 16:25		7 14 33		4		SAA	SM		N/A	PID=0 ppm α=0 ppm BΓ=60-80 cpm
51.5 53.0	114642 05/20/93 09:15		9 9 10		4		SAA	SM		N/A	PID=0 ppm α=0 ppm BΓ=20-40 cpm
53.0 54.5	114643 05/20/93 09:25		8 23 28		8		SAA	SM		N/A	PID=0 ppm α=0 ppm BΓ=20-40 cpm
54.5 56.0	114644 05/20/93 09:35		50		4		VERY DENSE, (10YR 4/4) DARK YELLOWISH BROWN, COARSE TO FINE SILTY SAND, MOIST	SM		N/A	PID=0 ppm α=0 ppm BΓ=20-40 cpm
56.0 57.5	114645 05/20/93 10:00		8 8 15		12		0-8" SAA, 8-12" MEDIUM DENSE, (2.5Y 4/1) DARK GRAY, COARSE TO MEDIUM GRAINED SAND, WET-TOP OF AQUIFER WATER	SM SP		N/A	PID=0 ppm α=0 ppm BΓ=20-40 cpm
57.5 59.0	114646 05/20/93 10:30		8 12 12		12		SAA	SP		N/A	PID=0 ppm α=0 ppm BΓ=40-60 cpm
59.0 60.5	114647 05/20/93 13:50		3 12 18		8		MEDIUM DENSE, (2.5Y 4/1) DARK GRAY, COARSE TO MEDIUM GRAINED SAND, SOME FINE GRAVELS, WET	SP		N/A	PID=0 ppm α=0 ppm BΓ=40-60 cpm
60.5 62.0	114648 05/20/93 14:00		29 49 27		18		VERY DENSE, (2.5Y 4/1) DARK GRAY, COARSE TO MEDIUM GRAINED SAND, SOME FINE SAND, SOME FINE GRAVELS, WET *GRAVELS SHOW CHEMICAL WEATHERING	SP		N/A	PID=0 ppm α=0 ppm BΓ=20-40 cpm
62.0 63.5	114649 05/20/93 14:15		16 30 39		18		SAA	SP		N/A	PID=0 ppm α=0 ppm BΓ=20-40 cpm
65.0 66.5	05/20/93 15:15		5 4 5		0		NO RECOVERY	N/A		N/A	
66.5 68.0	114650 05/20/93 15:30		19 19 25		N/A		SAA	N/A		N/A	PID=0 ppm α=0 ppm BΓ=20-40 cpm

NOTES:
CEMENT PLACED FROM 0 TO 1 FT TO HOLD PROTECTIVE PIPE IN PLACE WATER LEVEL 5-27-93 54.1 BELOW GROUNDSURFACE

Boring Contractor: PENNSYLVANIA DRILLING
Driller: BOB ERICKSON
Drilling Equipment: BUCYRUS-ERIE

SAA = Same as Above
PID = Photoionization Detector
N/A = Not Applicable

TABLE D-19B

K-65/LIME SLUDGE PONDS TRENCHING LOGS

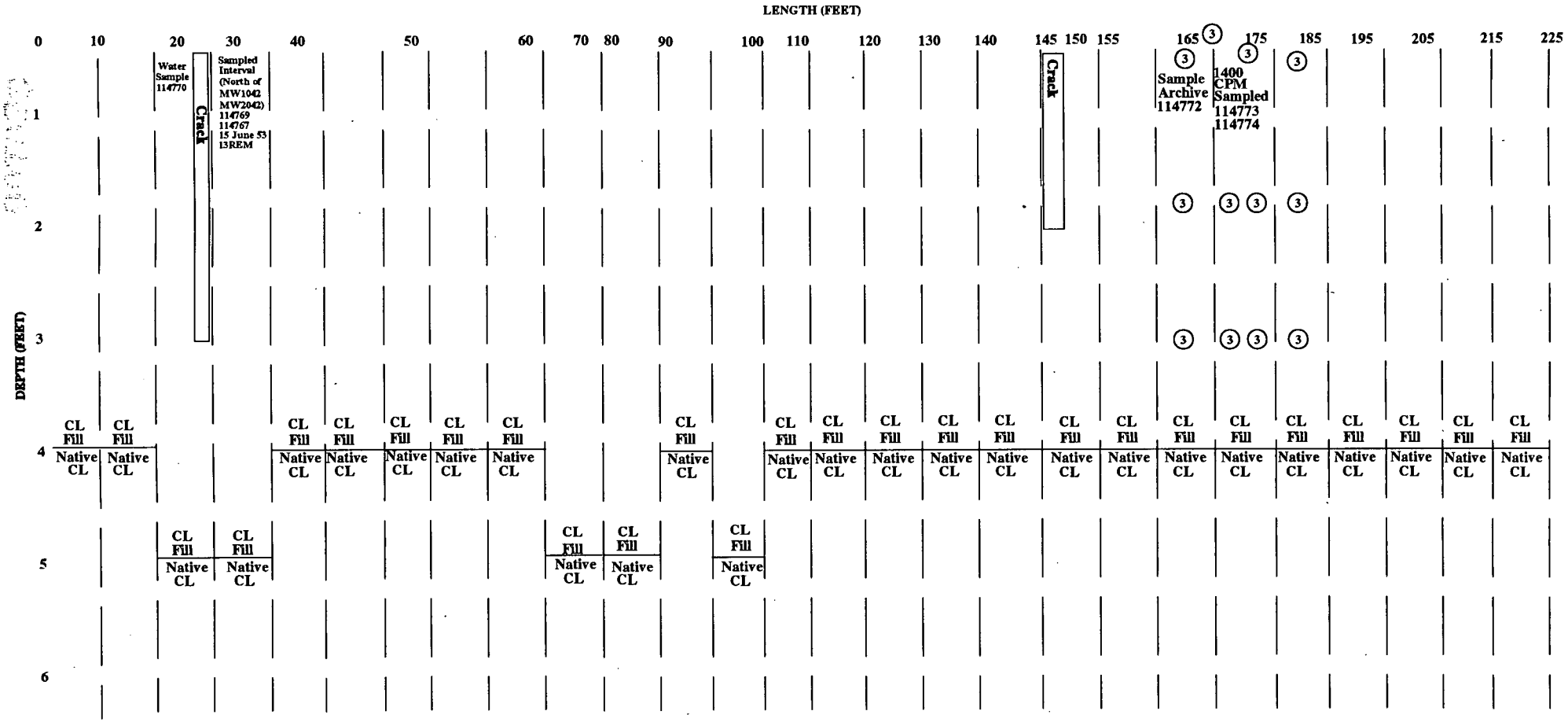

Horizontal Sample Interval Boundary
(0 - 70 Feet)

	0-2	2-4	4-6	SXN
Mean Max Beta-Gamma:	212	123	123	153
Mean Max MT:	1.6	0	0.1	0.6

(70 - 145 Feet)

	0-2	2-4	4-6	SXN
Mean Max Beta-Gamma:	124	113	109	115
Mean Max MT:	0	0	0	0

(145 - 225 Feet)

	0-2	2-4	4-6	SXN
Mean Max Beta-Gamma:	418	174	158	250
Mean Max MT:	0	0.1	0	0

(3) - SPA 3 Survey Point

001053

FEMP-OU02-6 FINAL
January 21, 1995

TABLE D-20

TABLE D-20

MONITORING WELL INSTALLATION RECORD

PROJECT NAME: Fernald Environmental Management Project	**PROJECT LOCATION:** Fernald
BORING ID NO: 1934	**COUNTY:** Hamilton
PROJECT ID: 20.03.05	**STATE:** Ohio
DATE INSTALLED: 5-4-93	**CONTRACTOR:** Pennsylvania Drilling Co.
FIELD ENG./GEOL.: B. Mueller	**DRILLED BY:** Dan Jamison
TYPE OF SEAL: Grout	**DRILLING METHOD:** Hollow Stem Auger
DEVELOPEMENT METHOD: Bail-Surge-Bail	**TYPE OF BIT:** Hollow Stem Auger
SURVEY DATUM	**SAND PACK TYPE:** 10/20 Silica
	WATER LEVEL/DATE: 572.60/5-7-93

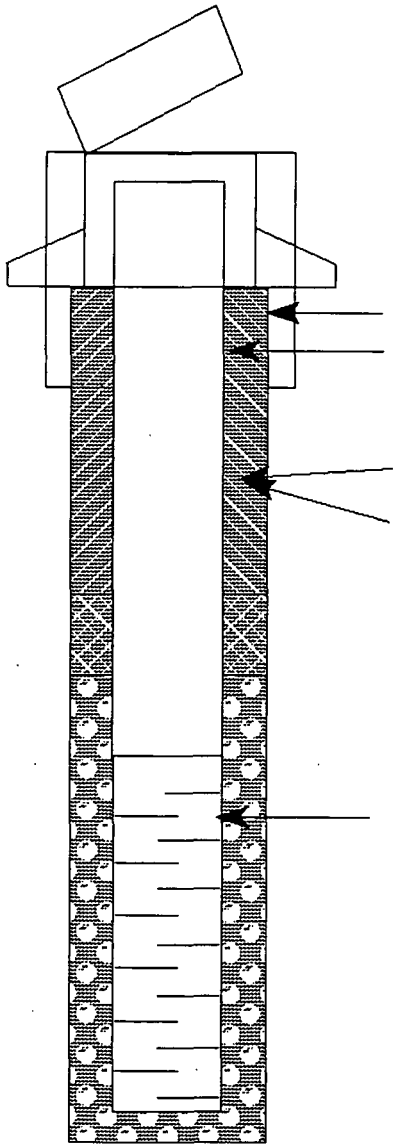

580.12 ft, Top of Casing (Protective pipe)
579.57 ft, Top of Well
578.31 ft, Concrete Elevation
577.81 ft, Ground Elevation
8 in, Boring Diameter
2 in, Casing Diameter
2.5 Bottom Protective Pipe
S. S. Casing Material
■ Grout
□ Other _____
4 ft, Top of Bentonite
7.5 ft, Bottom of Bentonite
9.5 ft, Top of Screen

Well Screen

2 in, Diameter
.01 in, Slot
10 Length (ft)
S. S. Material

19.5 ft, Bottom of Screen
21 ft, Bottom of Boring

Note: Elevations in feet above mean sea level.

TABLE D-20

MONITORING WELL INSTALLATION RECORD

PROJECT NAME: Fernald Environment Management Project	**PROJECT LOCATION:** Fernald
BORING ID NO: 1937	**COUNTY:** Hamilton
PROJECT ID: 20.03.05	**STATE:** Ohio
DATE INSTALLED: May 1, 1993	**CONTRACTOR:** Pennsylvania Drilling Co.
FIELD ENG./GEOL.: B. E. Muller	**DRILLED BY:** Dan Jamison
TYPE OF SEAL: Grout/Slurry	**DRILLING METHOD:** Hollow Stem Auger
DEVELOPEMENT METHOD: Surge-Bail	**TYPE OF BIT:** Auger
SURVEY DATUM	**SAND PACK TYPE:** 10/20 Silica
	WATER LEVEL/DATE: 574.56/6-21-93

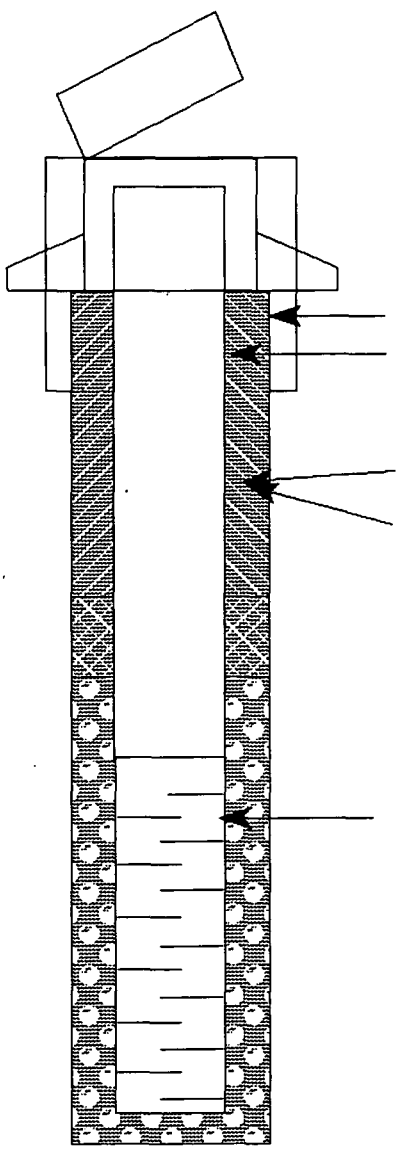

579.27 ft, Top of Casing (Protective pipe)
578.99 ft, Top of Well
577.31 ft, Concrete Elevation
576.81 ft, Ground Elevation
8 in, Boring Diameter
2 in, Casing Diameter
2.5 Bottom Protective Pipe
S. S. Casing Material
■ Grout
□ Other _____
1.5 ft, Top of Bentonite
4.5 ft, Bottom of Bentonite
8.5 ft, Top of Screen
Well Screen
2 in, Diameter
.01 in, Slot
10 Length (ft)
S. S. Material
18.5 ft, Bottom of Screen
20.5 ft, Bottom of Boring

Note: Elevations in feet above mean sea level.

TABLE D-20

MONITORING WELL INSTALLATION RECORD

PROJECT NAME: Fernald Environmental Management Project	**PROJECT LOCATION:** Fernald
BORING ID NO: 1940	**COUNTY:** Hamilton
PROJECT ID: 20.03.05	**STATE:** Ohio
DATE INSTALLED: 5/24-93	**CONTRACTOR:** Pennsylvania Drilling Co.
FIELD ENG./GEOL.: Greg Ronczka	**DRILLED BY:** Dan Jamison, Dan Arthur
TYPE OF SEAL: Bentonite	**DRILLING METHOD:** Hollow Stem Auguering
DEVELOPEMENT METHOD: Surge-Bail	**TYPE OF BIT:** Auger
SURVEY DATUM	**SAND PACK TYPE:** 10/20 Silica
	WATER LEVEL/DATE: 572.75/6-21-93

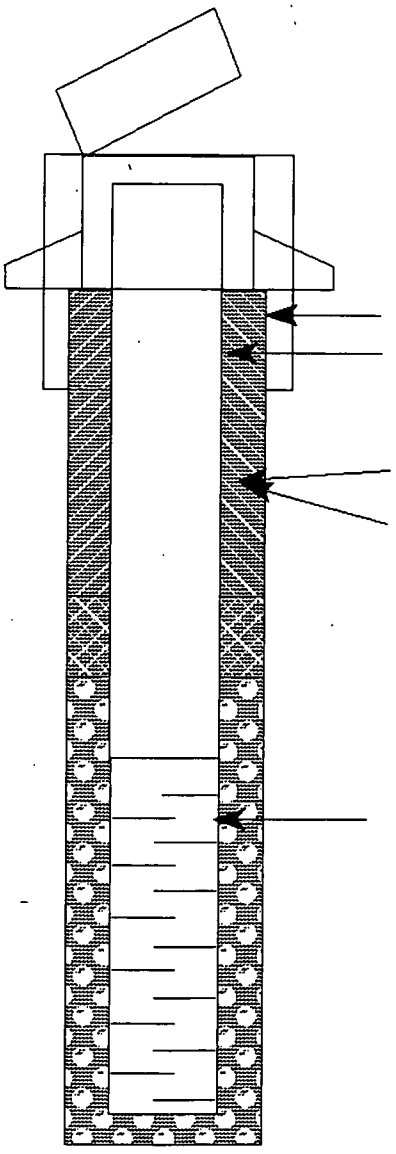

279.11 ft, Top of Casing (Protective pipe)
578.95 ft, Top of Well
NA ft, Concrete Elevation
576.5 ft, Ground Elevation
8 in, Boring Diameter
2 in, Casing Diameter
2.5 Bottom Protective Pipe
S. S. Casing Material
■ Grout
□ Other _____
3 ft, Top of Bentonite
7 ft, Bottom of Bentonite
9.2 ft, Top of Screen
Well Screen
2 in, Diameter
.01 in, Slot
18.9-9.2 Length
Screen Material
18.9 ft, Bottom of Screen
19.5 ft, Bottom of Boring

Note: Elevations in feet above mean sea level.

1

TABLE D-20

MONITORING WELL INSTALLATION RECORD

PROJECT NAME: Fernald Environmental Management Project	**PROJECT LOCATION:** Fernald
BORING ID NO: 2935	**COUNTY:** Hamilton
PROJECT ID: 20.03.05	**STATE:** Ohio
DATE INSTALLED: 5-13-93	**CONTRACTOR:** Pennsylvania Drilling Co.
FIELD ENG./GEOL.: P. McCarren	**DRILLED BY:** Bob Erickson, Richard Thoms
TYPE OF SEAL: Colclay Grout	**DRILLING METHOD:** Cable Tool
DEVELOPEMENT METHOD: Bail-Surge-Bail	**TYPE OF BIT:** Ammer Percussion
SURVEY DATUM	**SAND PACK TYPE:** 10/20 Silica
	WATER LEVEL/DATE: 521.96/7-8-93

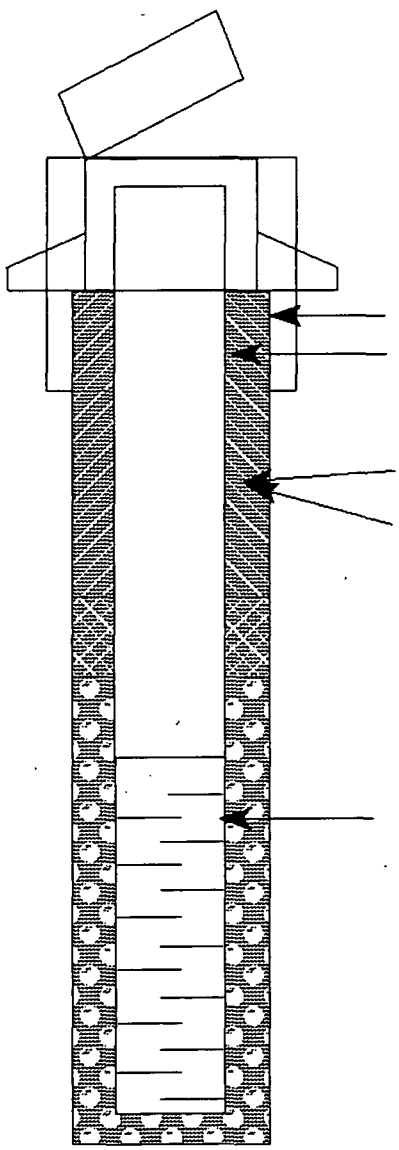

581.62 ft, Top of Casing (Protective pipe)
581.13 ft, Top of Well
579.69 ft, Concrete Elevation
579.19 ft, Ground Elevation
8 in, Boring Diameter
4 in, Casing Diameter
2.6 Bottom Protective Pipe
S. S. Casing Material
■ Grout
□ Other _____
1 ft, Top of Bentonite
43 ft, Bottom of Bentonite
53 ft, Top of Screen
Well Screen
4 in, Diameter
.01 in, Slot
15 Length (ft)
S. S. Material
68 ft, Bottom of Screen
70 ft, Bottom of Boring

Note: Elevations in feet above mean sea level.

TABLE D-20

MONITORING WELL INSTALLATION RECORD

PROJECT NAME: Fernald Environmental Management Project	**PROJECT LOCATION:** Fernald
BORING ID NO: 2936	**COUNTY:** Hamilton
PROJECT ID: 20.03.05	**STATE:** Ohio
DATE INSTALLED: May 14, 1993	**CONTRACTOR:** Pennsylvania Drilling Co.
FIELD ENG./GEOL.: K. Payne	**DRILLED BY:** Bob Johnson
TYPE OF SEAL: Grout/Slurry	**DRILLING METHOD:** Cable Tool
DEVELOPEMENT METHOD: Bail-Surge-Bail	**TYPE OF BIT:** Hammer Percussion Bit
SURVEY DATUM	**SAND PACK TYPE:** 10/20 Silica
	WATER LEVEL/DATE: 522.36/6-21-93

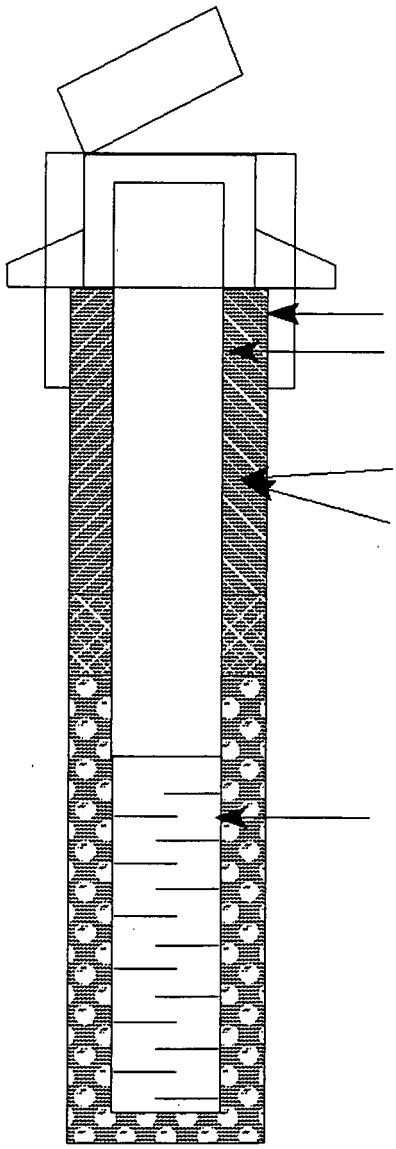

581.97 ft, Top of Casing (Protective pipe)
581.32 ft, Top of Well
NA ft, Concrete Elevation
579.6 ft, Ground Elevation
10 in, Boring Diameter
4 in, Casing Diameter
2.5 Bottom Protective Pipe
S. S. Casing Material
■ Grout
□ Other _____
.6 ft, Top of Bentonite
4.2 ft, Bottom of Bentonite
53 ft, Top of Screen
Well Screen
4 in, Diameter
.01 in, Slot
15 Length (ft)
S. S. Material
68 ft, Bottom of Screen
72 ft, Bottom of Boring

Note: Elevations in feet above mean sea level.

TABLE D-20

MONITORING WELL INSTALLATION RECORD

PROJECT NAME: Fernald Environmental Management Project	**PROJECT LOCATION:** Fernald
BORING ID NO: 2939	**COUNTY:** Hamilton
PROJECT ID: 20.03.05	**STATE:** Ohio
DATE INSTALLED: May 27, 1993	**CONTRACTOR:** Pennsylvania Drilling
FIELD ENG./GEOL.: D. McCarren	**DRILLED BY:** Bob Erickson
TYPE OF SEAL: Volclay	**DRILLING METHOD:** Cable Tool
DEVELOPEMENT METHOD: Bail-Surge-Bail	**TYPE OF BIT:** Hammer Percussion
SURVEY DATUM	**SAND PACK TYPE:** 10/20 Silica
	WATER LEVEL/DATE: 522.10/8-2-93

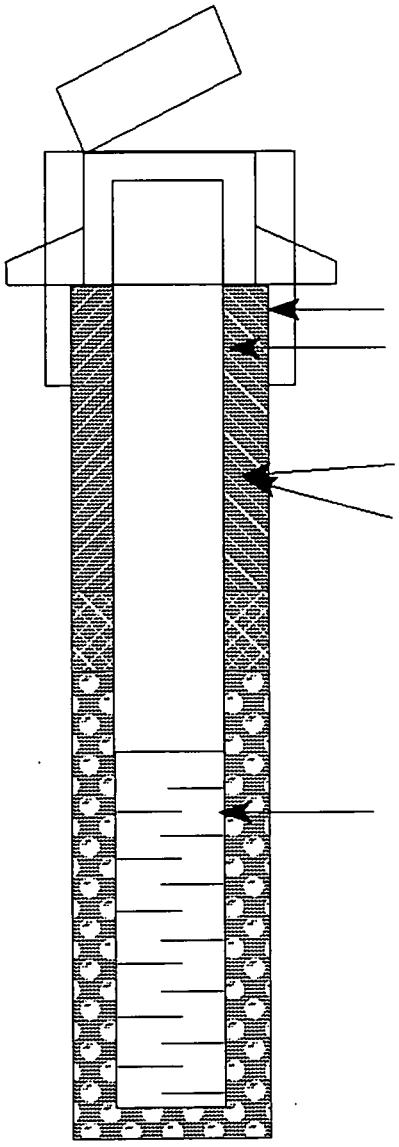

578.67 ft, Top of Casing (Protective pipe)
578.34 ft, Top of Well
NA ft, Concrete Elevation
576.6 ft, Ground Elevation
10 3/8 in, Boring Diameter
4 in, Casing Diameter
2.5 Bottom Protective Pipe
S. S. Casing Material
■ Grout
□ Other _____
0 ft, Top of Bentonite
42 ft, Bottom of Bentonite
52 ft, Top of Screen
Well Screen
4 in, Diameter
.01 in, Slot
15 Length (ft)
S. S. Material
67 ft, Bottom of Screen
69 ft, Bottom of Boring

Note: Elevations in feet above mean sea level.

TABLE D-20

MONITORING WELL INSTALLATION RECORD

PROJECT NAME: Fernald Environmental Management Project	**PROJECT LOCATION:** Fernald
BORING ID NO: 1039	**COUNTY:** Hamilton
PROJECT ID: NA	**STATE:** Ohio
DATE INSTALLED: April 9, 1988	**CONTRACTOR:** NA
FIELD ENG./GEOL.: M. Slusaski	**DRILLED BY:** NA
TYPE OF SEAL: Bentonite	**DRILLING METHOD:** Cable-Tool Drilling
DEVELOPEMENT METHOD: NA	**TYPE OF BIT:** Flat Head Hammer
SURVEY DATUM	**SAND PACK TYPE:** NA
	WATER LEVEL/DATE: NA

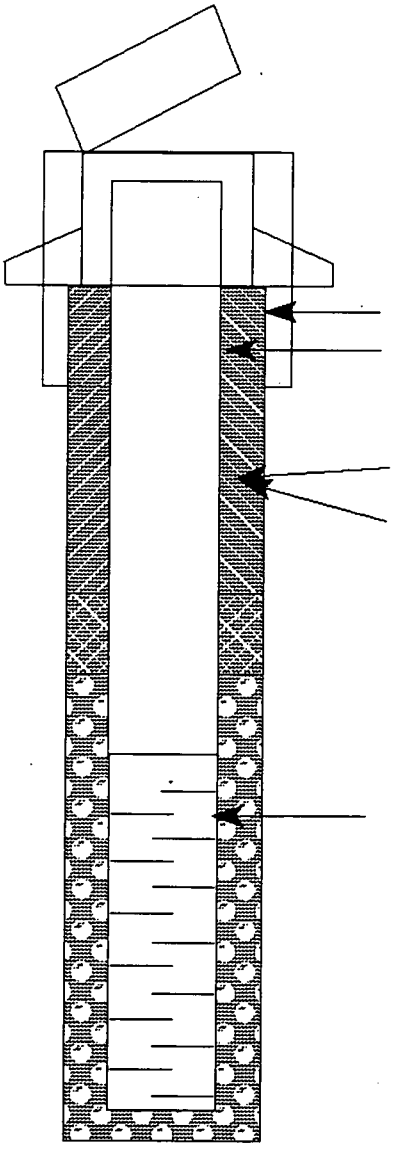

579.81 ft, Top of Casing (Protective pipe)
579.27 ft, Top of Well
NA ft, Concrete Elevation
577.4 ft, Ground Elevation
10 3/8 in, Boring Diameter
4 in, Casing Diameter
2.5 Bottom Protective Pipe
S. S. Casing Material
Grout
Other Bentonite
0 ft, Top of Bentonite
8 ft, Bottom of Bentonite
13 ft, Top of Screen
Well Screen
4 ID in, Diameter
.01 in, Slot
11 Length (ft)
S. S. Material
24 ft, Bottom of Screen
27 ft, Bottom of Boring

Note: Elevations in feet above mean sea level.

TABLE D-20

MONITORING WELL INSTALLATION RECORD

PROJECT NAME: Fernald Environmental Management Project	**PROJECT LOCATION:** Fernald
BORING ID NO: 1041	**COUNTY:** Hamilton
PROJECT ID: NA	**STATE:** Ohio
DATE INSTALLED: April 11, 1988	**CONTRACTOR:** NA
FIELD ENG./GEOL.: M. Slusarski	**DRILLED BY:** NA
TYPE OF SEAL: Bentonite	**DRILLING METHOD:** Cable-Tool Drilling
DEVELOPEMENT METHOD: NA	**TYPE OF BIT:** Flat Head Hammer
SURVEY DATUM	**SAND PACK TYPE:** NA
	WATER LEVEL/DATE: NA

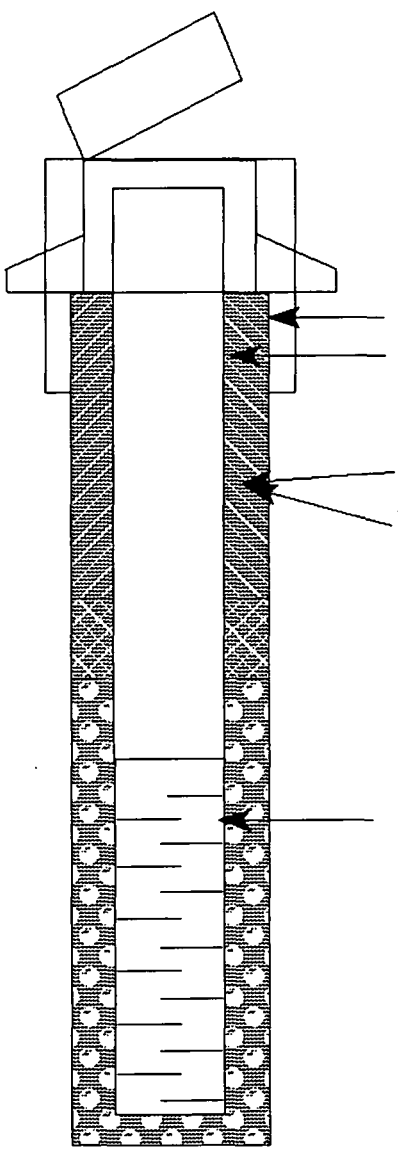

583.62 ft, Top of Casing (Protective pipe)
583.13 ft, Top of Well
NA ft, Concrete Elevation
581.3 ft, Ground Elevation
10 3/8 in, Boring Diameter
4 in, Casing Diameter
1.5 Bottom Protective Pipe
S. S. Casing Material
Grout
Other Bentonite
0 ft, Top of Bentonite
5 ft, Bottom of Bentonite
10 ft, Top of Screen
Well Screen
4 ID in, Diameter
.01 in, Slot
10 Length (ft)
S. S. Material
20 ft, Bottom of Screen
22.5 ft, Bottom of Boring

Note: Elevations in feet above mean sea level.

TABLE D-20

MONITORING WELL INSTALLATION RECORD

PROJECT NAME: Fernald Environmental Management Project	**PROJECT LOCATION:** Fernald
BORING ID NO: 1042	**COUNTY:** Hamilton
PROJECT ID: NA	**STATE:** Ohio
DATE INSTALLED: April 21, 1988	**CONTRACTOR:** NA
FIELD ENG./GEOL.: M. Goldberg	**DRILLED BY:** NA
TYPE OF SEAL: Bentonite	**DRILLING METHOD:** NA
DEVELOPEMENT METHOD: NA	**TYPE OF BIT:** Flat Head Hammer
SURVEY DATUM	**SAND PACK TYPE:** NA
	WATER LEVEL/DATE: NA

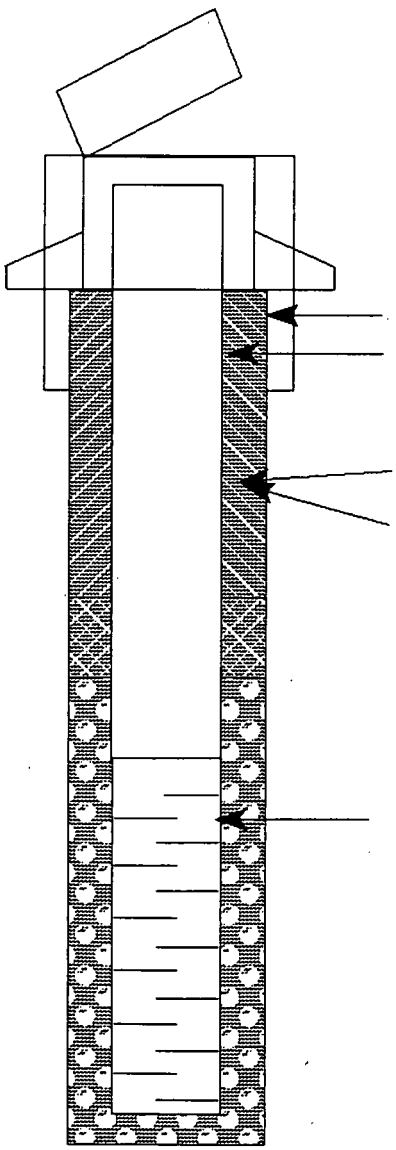

577.17 ft, Top of Casing (Protective pipe)
576.46 ft, Top of Well
575.4 ft, Concrete Elevation
574.9 ft, Ground Elevation
10 3/8 in, Boring Diameter
4 in, Casing Diameter
2.5 Bottom Protective Pipe
S. S. Casing Material
Grout
Other Bentontie
0 ft, Top of Bentonite
5 ft, Bottom of Bentonite
9 ft, Top of Screen
Well Screen
_____ in, Diameter
.01 in, Slot
10 Length (ft)
S. S. Material
19 ft, Bottom of Screen
21 ft, Bottom of Boring

Note: Elevations in feet above mean sea level.

TABLE D-20

MONITORING WELL INSTALLATION RECORD

PROJECT NAME: Fernald Environmental Management Project	**PROJECT LOCATION:** Fernald
BORING ID NO: 1134	**COUNTY:** Hamilton
PROJECT ID: NA	**STATE:** Ohio
DATE INSTALLED: May 4, 1989	**CONTRACTOR:** NA
FIELD ENG./GEOL.: L. Sinfield	**DRILLED BY:** NA
TYPE OF SEAL: Bentonite	**DRILLING METHOD:** Auger
DEVELOPEMENT METHOD: NA	**TYPE OF BIT:** Auger Bit
SURVEY DATUM	**SAND PACK TYPE:** NA
	WATER LEVEL/DATE: NA

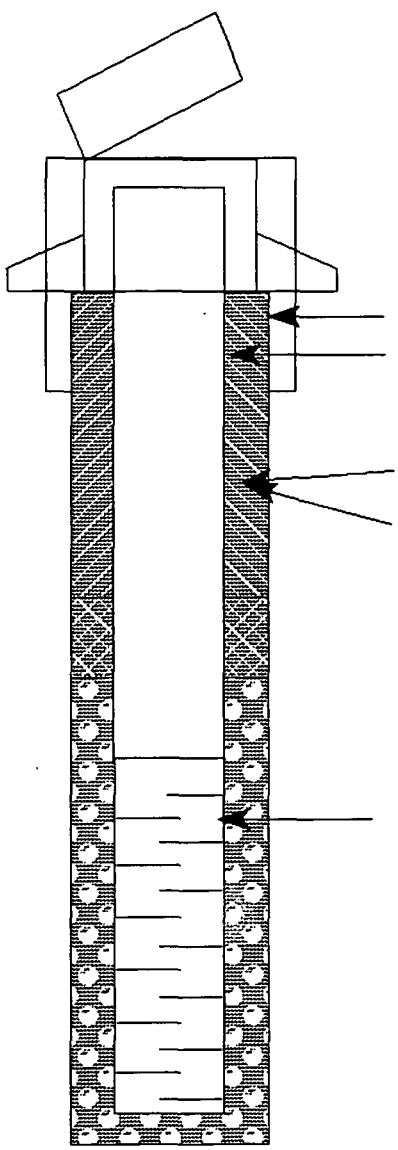

580.79 ft, Top of Casing (Protective pipe)
580.6 ft, Top of Well
NA ft, Concrete Elevation
579.8 ft, Ground Elevation
8 in, Boring Diameter
2 in, Casing Diameter
2.8 Bottom Protective Pipe
40 PVC Casing Material
■ Grout
□ Other _____
1 ft, Top of Bentonite
7 ft, Bottom of Bentonite
10 ft, Top of Screen
Well Screen
2 ID in, Diameter
.02 in, Slot
5.8 Length (ft)
40 PVC Material
15.8 ft, Bottom of Screen
16.5 ft, Bottom of Boring

Note: Elevations in feet above mean sea level.

TABLE D-20

MONITORING WELL INSTALLATION RECORD

PROJECT NAME: Fernald Environmental Management Project	**PROJECT LOCATION:** Fernald
BORING ID NO: 1176	**COUNTY:** Hamilton
PROJECT ID: NA	**STATE:** Ohio
DATE INSTALLED: May 8, 1989	**CONTRACTOR:** NA
FIELD ENG./GEOL.: C. Gube, L. Adams	**DRILLED BY:** NA
TYPE OF SEAL: Bentonite	**DRILLING METHOD:** Auger
DEVELOPEMENT METHOD: NA	**TYPE OF BIT:** 8-inch Hollow Auger
SURVEY DATUM	**SAND PACK TYPE:** NA
	WATER LEVEL/DATE: NA

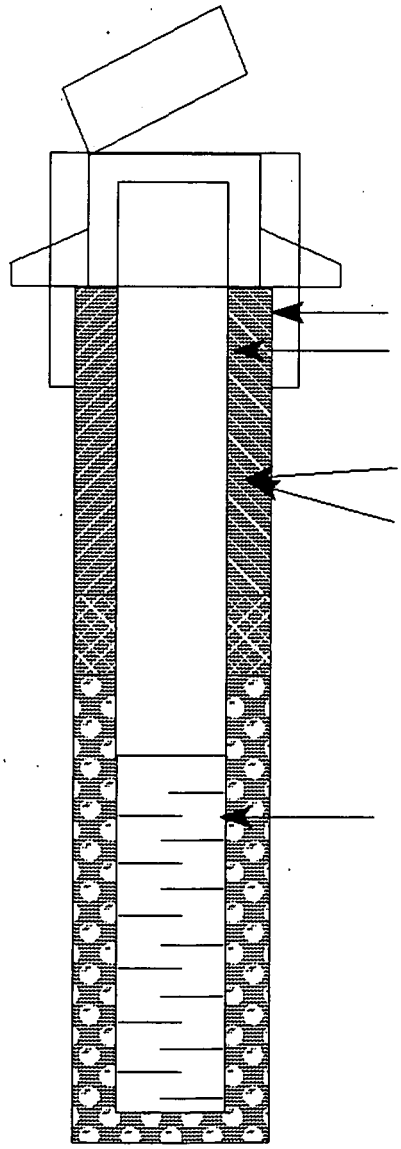

581.51 ft, Top of Casing (Protective pipe)
581.15 ft, Top of Well
NA ft, Concrete Elevation
579.7 ft, Ground Elevation
8 in, Boring Diameter
2 in, Casing Diameter
2.6 Bottom Protective Pipe
40 PVC Casing Material
■ Grout
□ Other _____
1 ft, Top of Bentonite
4 ft, Bottom of Bentonite
7 ft, Top of Screen
Well Screen
2 ID in, Diameter
.02 in, Slot
5 Length (ft)
40 PVC Material
12 ft, Bottom of Screen
12 ft, Bottom of Boring

Note: Elevations in feet above mean sea level.

TABLE D-20

MONITORING WELL INSTALLATION RECORD

PROJECT NAME: Fernald Environmental Management Project	**PROJECT LOCATION:** Fernald
BORING ID NO: 1210	**COUNTY:** Hamilton
PROJECT ID: NA	**STATE:** Ohio
DATE INSTALLED: May 3, 1989	**CONTRACTOR:** NA
FIELD ENG./GEOL.: C. Grube, E. Trollinger	**DRILLED BY:** NA
TYPE OF SEAL: Bentonite	**DRILLING METHOD:** Auger
DEVELOPEMENT METHOD: NA	**TYPE OF BIT:** 8-inch Hollow Stem Auger
SURVEY DATUM	**SAND PACK TYPE:** NA
	WATER LEVEL/DATE: NA

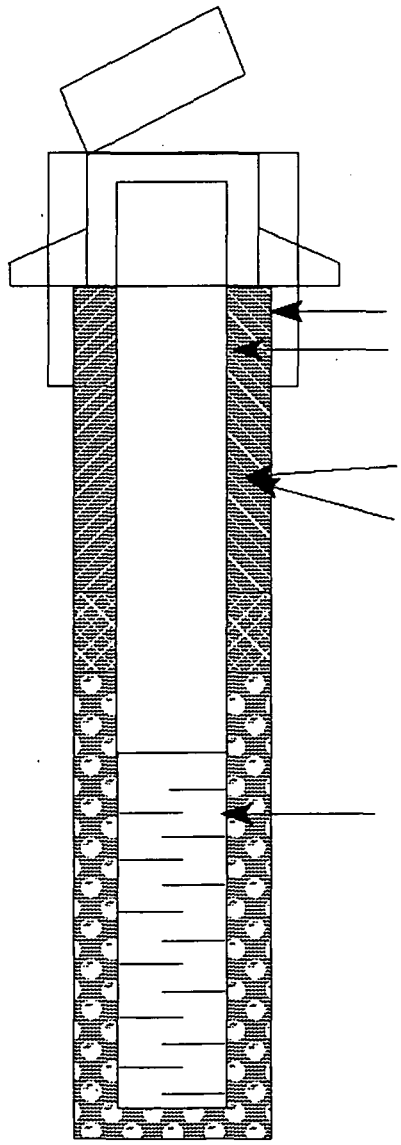

582.21 ft, Top of Casing (Protective pipe)
581.8 ft, Top of Well
579.41 ft, Concrete Elevation
578.91 ft, Ground Elevation
8 in, Boring Diameter
2 in, Casing Diameter
2.5 Bottom Protective Pipe
40 PVC Casing Material
■ Grout
□ Other _____
1 ft, Top of Bentonite
2.8 ft, Bottom of Bentonite
5.5 ft, Top of Screen

Well Screen

2 ID in, Diameter
.02 in, Slot
5 Length (ft)
40 PVC Material

10.5 ft, Bottom of Screen
10.5 ft, Bottom of Boring

Note: Elevations in feet above mean sea level.

TABLE D-20

MONITORING WELL INSTALLATION RECORD

PROJECT NAME: Fernald Environmental Management Project	**PROJECT LOCATION:** Fernald
BORING ID NO: 2042	**COUNTY:** Hamilton
PROJECT ID: NA	**STATE:** Ohio
DATE INSTALLED: April 19, 1988	**CONTRACTOR:** NA
FIELD ENG./GEOL.: M. Goldberg	**DRILLED BY:** NA
TYPE OF SEAL: Bentonite	**DRILLING METHOD:** NA
DEVELOPEMENT METHOD: NA	**TYPE OF BIT:** Flat Head Hammer
SURVEY DATUM	**SAND PACK TYPE:** NA
	WATER LEVEL/DATE: NA

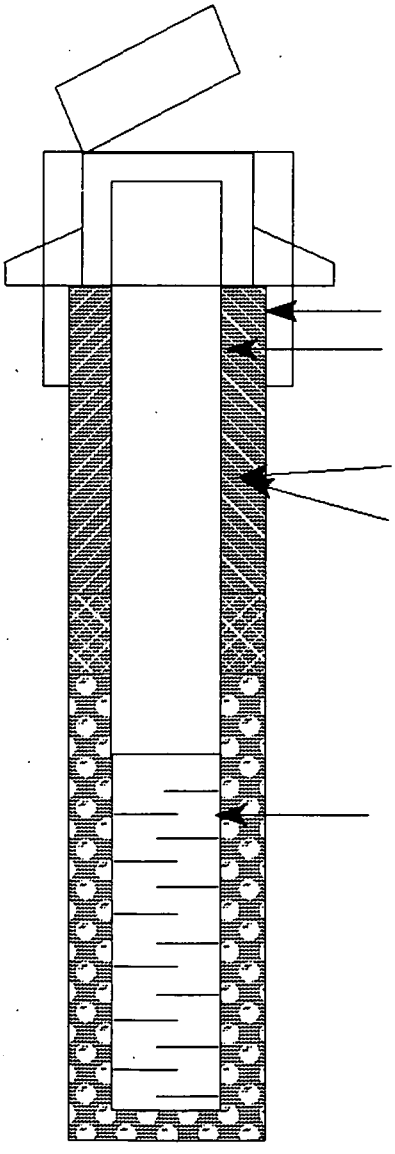

577.58 ft, Top of Casing (Protective pipe)
577.2 ft, Top of Well
573.3 ft, Concrete Elevation
572.8 ft, Ground Elevation
10 3/8 in, Boring Diameter
4 in, Casing Diameter
2.5 Bottom Protective Pipe
S. S. Casing Material
■ Grout
□ Other _____
42.9 ft, Top of Bentonite
46 ft, Bottom of Bentonite
50 ft, Top of Screen
Well Screen
4 in, Diameter
.01 in, Slot
16 Length (ft)
S. S. Material
66 ft, Bottom of Screen
68 ft, Bottom of Boring

Note: Elevations in feet above mean sea level.

TABLE D-21

TABLE D-21A

LIME SLUDGE PONDS
GROUNDWATER ELEVATION DATA[a], 1988 - 1992
OPERABLE UNIT 2 REMEDIAL INVESTIGATION
FERNALD ENVIRONMENTAL MANAGEMENT PROJECT

Year	Well No.	January	February	March	April	May	June	July	August	September	October	November	December
1988	1039	NMT[b]	NMT	NMT	NMT	573.83	573.08	573.17	573.93	574.17	573.65	574.35	573.80
1988	1041	NMT	NMT	NMT	NMT	573.63	573.19	572.68	573.68	574.00	573.21	574.43	573.49
1988	1042	NMT	NMT	NMT	NMT	570.64	570.36	570.41	571.01	571.20	570.59	571.96	571.11
1988	1045	DRY	542.52	542.88	539.82	539.10	539.11	538.97	538.69	538.19	DRY	DRY	DRY
1988	2042	NMT	NMT	NMT	NMT	521.08	520.74	519.95	511.85	518.55	518.26	517.68	517.80
1989	1039	574.78	574.21	575.38	574.63	574.87	575.43	574.06	573.60	574.49	573.94	574.94	573.97
1989	1041	575.18	574.03	575.74	574.58	574.95	575.57	573.78	574.01	574.62	572.17	NMT	573.82
1989	1042	574.39	572.03	574.79	572.85	573.69	573.92	571.27	570.58	571.84	569.56	NMT	571.33
1989	1045	542.89	542.31	543.00	NMT	542.48	542.59	541.63	541.20	540.88	542.05	541.35	539.30
1989	1134	NMT	NMT	NMT	NMT	575.19	575.62	574.43	575.77	574.78	574.26	575.12	NMT
1989	1176	NMT	NMT	NMT	NMT	575.08	574.68	DRY	DRY	DRY	DRY	DRY	NMT
1989	1210	NMT	NMT	NMT	NMT	575.08	574.26	574.27	575.50	574.77	573.77	569.72	NMT
1989	1229	NMT	NMT	NMT	NMT	573.17	573.30	571.40	572.48	571.91	571.08	572.77	NMT
1989	2042	517.66	518.44	519.32	520.86	522.40	523.68	523.48	522.59	522.13	521.52	NMT	521.08
1990	1039	575.09	575.62	NMT	574.74	575.12	571.01	574.56	573.63	572.42	575.21	574.49	574.28
1990	1041	575.65	NMT	NMT	575.00	575.90	574.24	574.55	573.36	574.45	573.83	574.50	574.63
1990	1042	574.68	NMT	NMT	572.69	574.84	571.48	572.12	571.00	572.37	NMT	570.84	572.24
1990	1134	575.25	575.57	NMT	575.28	575.21	574.69	574.69	574.06	575.40	574.76	574.88	576.24
1990	1176	DRY	DRY	NMT	DRY	DRY	DRY	DRY	574.48	DRY	DRY	DRY	DRY
1990	1210	575.29	575.76	NMT	575.27	575.17	574.33	574.62	573.61	575.16	574.41	574.36	576.83
1990	1229	573.58	574.38	NMT	572.04	573.09	NMT	571.86	571.17	573.09	571.92	571.71	574.77
1990	2042	520.95	NMT	NMT	523.20	523.78	524.64	523.68	523.61	522.76	522.30	522.84	522.91

See footnotes at end of table

FER\CRU2RI\TLC\APP-D\TABD-21A\January 6, 1995 2:59pm

001067

TABLE D-21A
(Continued)

Year	Well No.	January	February	March	April	May	June	July	August	September	October	November	December
1991	1039	574.85	574.97	NMT	NMT	NMT	574.00	573.31	573.77	568.94	573.51	569.70	574.98
1991	1041	575.23	575.44	NMT	NMT	NMT	NMT	572.91	573.49	573.55	573.32	573.56	575.88
1991	1042	573.48	574.25	NMT	NMT	NMT	NMT	570.50	570.83	570.93	570.64	570.48	573.56
1991	1134	575.53	575.31	NMT	NMT	NMT	574.05	573.82	574.46	NMT	573.54	574.79	575.17
1991	1176	DRY	DRY	NMT	NMT	NMT	DRY	DRY	DRY	574.47	DRY	DRY	DRY
1991	1210	574.93	574.67	NMT	NMT	NMT	573.47	572.75	573.82	573.49	573.85	573.29	575.31
1991	1229	572.46	572.07	NMT	NMT	NMT	571.17	570.75	571.60	571.61	570.88	570.65	571.67
1991	2042	524.55	524.85	NMT	NMT	NMT	NMT	523.09	522.22	521.47	521.17	520.20	519.40
1992	1039	575.30	574.87	574.48	574.70	NMT	574.36	574.77	574.11	574.62	574.71	574.64	574.62
1992	1041	576.41	575.52	574.91	575.42	NMT	574.89	575.58	574.47	575.56	575.63	575.54	575.33
1992	1042	574.88	573.06	572.06	573.23	NMT	572.15	573.48	571.36	572.21	572.34	573.40	572.13
1992	1134	574.49	575.39	575.15	NMT	NMT	NMT	573.39	NMT	NMT	575.45	NMT	NMT
1992	1176	DRY	DRY	DRY	NMT	NMT	NMT	DRY	NMT	NMT	DRY	NMT	NMT
1992	1210	575.14	575.26	574.94	NMT	NMT	NMT	575.48	NMT	NMT	574.88	NMT	NMT
1992	1229	572.10	572.44	572.24	572.51	NMT	571.91	573.22	571.45	571.33	571.80	572.70	571.73
1992	2042	519.20	519.31	519.06	518.96	NMT	519.44	519.68	520.10	519.79	519.60	519.66	520.06
MISCELLANEOUS GROUNDWATER ELEVATION DATA													
1988	1025	NMT	569.82	570.33	570.04	561.54	568.34	570.85	571.07	571.16	570.88	570.75	570.63
1988	1064	NMT	NMT	NMT	NMT	NMT	NMT	NMT	NMT	NMT	NMT	NMT	559.92
1988	1080	NMT	NMT	NMT	NMT	560.15	567.24	567.55	560.89	567.71	567.83	567.73	568.18
1988	1081	575.10	575.95	576.69	576.89	575.49	575.35	575.05	575.04	574.95	574.71	574.68	575.05
1988	2068	517.88	518.34	519.34	520.10	520.17	519.75	518.81	518.17	517.52	517.13	516.50	516.58
1989	1025	570.34	563.52	570.48	569.89	571.37	571.73	571.75	571.95	DRY	570.27	571.62	570.84
1989	1064	566.90	577.59	577.35	577.55	577.06	574.76	573.94	NMT	573.44	571.12	573.28	572.46

See footnotes at end of table

FER\CRU2RI\TLC\APP-D\TABD-21A\January 6, 1995 2:59pm

001068

TABLE D-21A
(Continued)

Year	Well No.	January	February	March	April	May	June	July	August	September	October	November	December
MISCELLANEOUS GROUNDWATER ELEVATION DATA (continued)													
1989	1080	568.61	568.40	567.77	NMT	568.95	568.74	568.06	568.05	566.85	566.62	568.66	NMT
1989	1081	575.73	575.87	576.69	576.65	576.72	575.25	575.64	570.27	575.51	575.35	575.53	575.10
1989	2068	516.43	517.38	518.45	520.65	522.20	523.52	522.80	521.94	521.14	519.17	519.98	519.75
1989	2106	NMT	518.78	520.45	522.23	523.09	523.43	522.40	521.51	NMT	519.07	520.35	519.97
1990	1025	570.63	NMT	NMT	570.95	570.38	571.63	571.84	567.72	572.08	572.27	569.76	571.57
1990	1064	573.71	576.65	NMT	575.50	575.41	574.95	NMT	573.03	572.98	565.36	574.30	576.57
1990	1080	567.98	568.72	NMT	568.72	564.65	568.64	NMT	568.37	568.69	567.36	NMT	569.46
1990	1081	575.63	563.32	NMT	576.00	577.49	576.13	576.07	575.79	575.71	577.05	575.75	NMT
1990	2068	519.49	520.14	NMT	522.23	522.74	523.68	523.02	522.66	521.59	521.59	521.85	521.85
1990	2106	520.57	521.75	522.81	523.05	524.29	523.65	523.20	522.32	521.84	522.66	522.35	522.62
1990	2385	NMT	NMT	NMT	NMT	524.11	519.57	523.73	523.07	522.22	522.46	522.73	522.83
1990	2397	NMT	NMT	NMT	NMT	NMT	NMT	NMT	522.61	521.93	521.99	521.99	522.21
1991	1025	571.37	566.77	NMT	NMT	NMT	570.50	571.58	571.89	NMT	572.11	572.19	571.59
1991	1032	NMT	NMT	NMT	NMT	NMT	NMT	NMT	NMT	NMT	559.11	559.10	559.49
1991	1064	579.80	579.37	579.57	NMT	NMT	575.18	NMT	573.24	NMT	NMT	NMT	NMT
1991	1080	569.21	568.91	NMT	NMT	NMT	565.70	564.22	NMT	NMT	NMT	NMT	NMT
1991	1081	NMT	NMT	NMT	NMT	NMT	576.54	NMT	NMT	NMT	NMT	NMT	NMT
1991	1907	NMT	NMT	NMT	NMT	NMT	NMT	DRY	NMT	NMT	NMT	NMT	NMT
1991	2068	524.12	524.08	524.14	NMT	NMT	523.41	521.98	520.74	NMT	519.36	518.68	517.85
1991	2106	524.05	522.99	524.35	NMT	NMT	523.34	NMT	521.21	520.90	NMT	NMT	NMT
1991	2385	524.71	524.10	524.73	NMT	524.34	NMT	522.45	521.71	521.28	520.40	519.74	519.00
1991	2397	524.46	524.38	524.26	NMT	NMT	523.38	521.97	521.20	520.62	519.79	519.08	518.27

See footnotes at end of table

FER\CRU2RI\TLC\APP-D\TABD-21A\January 6, 1995 2:59pm

TABLE D-21A
(Continued)

Year	Well No.	January	February	March	April	May	June	July	August	September	October	November	December
MISCELLANEOUS GROUNDWATER ELEVATION DATA (continued)													
1992	1025	572.19	568.27	NMT	NMT	NMT	570.89	565.54	572.03	572.39	571.88	571.64	571.29
1992	1032	561.02	559.05	559.09	559.50	NMT	560.49	561.05	559.17	559.46	560.17	560.88	559.16
1992	2068	517.60	517.60	517.44	517.56	NMT	517.29	518.63	519.52	519.07	518.71	518.68	519.37
1992	2385	518.98	519.05	518.89	519.23	NMT	519.20	NMT	519.91	519.87	519.47	519.49	520.25
1992	2397	517.99	518.07	517.95	518.18	NMT	518.63	518.91	NMT	519.33	519.01	519.00	519.63

[a]Feet above Mean Sea Level

[b]No measurement taken

001070

TABLE D-21B

LIME SLUDGE PONDS
WATER ELEVATION DATA[a], 1993
PHASE II FIELD INVESTIGATION
OPERABLE UNIT 2 REMEDIAL INVESTIGATION
FERNALD ENVIRONMENTAL MANAGEMENT PROJECT

Well ID	3/18/93	3/23/93	4/09/93	4/19/93	5/07/93	5/19/93	6/02/93	6/21/93	7/08/93	7/19/93	8/02/93	8/16/93
1039	574.75	575.35	574.44	574.83	574.51	571.41	570.67	574.29	573.85	570.54	570.05	573.63
1041	575.63	576.27	575.09	575.73	574.87	574.71	573.47	574.61	574.24	573.67	572.93	573.60
1042	574.10	574.43	572.53	574.43	572.26	572.61	571.20	571.88	571.17	570.81	570.40	570.64
1134	575.52	575.59	575.23	575.49	575.33	571.98	574.31	574.94	574.60	574.21	573.81	574.37
1176	DRY	DRY	DRY	DRY	DRY	DRY	DRY	DRY	DRY	DRY	DRY	DRY
1210	573.33	575.17	575.23	575.29	574.67	574.52	573.89	574.35	574.11	574.23	573.18	573.66
1229	573.89	572.51	571.94	573.43	572.07	NMT[b]	571.49	NMT	571.65	571.29	570.67	571.51
1934	NMT	NMT	NMT	NMT	572.60	573.52	NMT	573.21	572.62	572.36	571.77	572.40
1937	NMT	NMT	NMT	NMT	NMT	NMT	NMT	574.56	573.56	573.10	572.40	573.33
1940	NMT	NMT	NMT	NMT	NMT	NMT	NMT	572.75	571.81	571.58	570.85	571.12
2042	521.24	521.61	522.00	522.18	527.35	522.48	522.65	522.45	522.18	522.06	521.84	521.46
2935	NMT	NMT	NMT	NMT	NMT	NMT	NMT	NMT	521.96	521.87	521.82	521.39
2936	NMT	NMT	NMT	NMT	NMT	NMT	NMT	522.36	522.03	521.88	521.84	521.41
2939	NMT	NMT	NMT	NMT	NMT	NMT	NMT	NMT	NMT	NMT	522.10	521.66

[a]Feet above Mean Sea Level

[b]NMT - No measurement taken

FER\CRU2RI\TLC\APP-D\TABD-21B\January 6, 1995 3:00pm

☆ U.S. GOVERNMENT PRINTING OFFICE: 1995-650-252/00036

001071

6508

TABLE C-9
(Continued)

PHASE II - CHEMICAL PARAMETERS

BORING NUMBER	SWL-SD-02				SWL-SD-01			
SAMPLE NUMBER	111325				111328			
SAMPLING DATE	04/06/93				04/08/93			
CHEMICAL PARAMETERS	RESULTS	UNITS	L	VQ	RESULTS	UNITS	L	VQ
Semivolatile Organics								
3-Nitroaniline	1200.000	ug/kg	D	U	1100.000	ug/kg	C	U
4,6-Dinitro-2-methylphenol	1200.000	ug/kg	D	U	1100.000	ug/kg	C	U
4-Bromophenyl phenyl ether	500.000	ug/kg	D	U	450.000	ug/kg	C	U
4-Chloro-3-methylphenol	500.000	ug/kg	D	U	450.000	ug/kg	C	U
4-Chlorophenylphenyl ether	500.000	ug/kg	D	U	450.000	ug/kg	C	U
4-Methylphenol	500.000	ug/kg	D	U	450.000	ug/kg	C	U
4-Nitroaniline	1200.000	ug/kg	D	U	1100.000	ug/kg	C	U
4-Nitrophenol	1200.000	ug/kg	D	U	1100.000	ug/kg	C	U
Acenaphthene	98.000	ug/kg	D	J	450.000	ug/kg	C	U
Acenaphthylene	500.000	ug/kg	D	U	450.000	ug/kg	C	U
Anthracene	240.000	ug/kg	D	J	450.000	ug/kg	C	U
Benzo(a)anthracene	500.000	ug/kg	D	-	450.000	ug/kg	C	U
Benzo(a)pyrene	550.000	ug/kg	D	-	450.000	ug/kg	C	U
Benzo(b)fluoranthene	730.000	ug/kg	D	-	450.000	ug/kg	C	U
Benzo(g,h,i)perylene	240.000	ug/kg	D	J	450.000	ug/kg	C	UJ
Benzo(k)fluoranthene	270.000	ug/kg	D	J	450.000	ug/kg	C	U
Benzoic acid	2400.000	ug/kg	D	U	2200.000	ug/kg	C	U
Benzyl alcohol	500.000	ug/kg	D	U	450.000	ug/kg	C	U
Butyl benzyl phthalate	500.000	ug/kg	D	U	450.000	ug/kg	C	U
Carbazole	120.000	ug/kg	D	J	450.000	ug/kg	C	U
Chrysene	510.000	ug/kg	D	-	450.000	ug/kg	C	U
Di-n-butyl phthalate	500.000	ug/kg	D	U	450.000	ug/kg	C	U
Di-n-octyl phthalate	500.000	ug/kg	D	U	450.000	ug/kg	C	U
Dibenzo(a,h)anthracene	500.000	ug/kg	D	U	450.000	ug/kg	C	U
Dibenzofuran	500.000	ug/kg	D	U	450.000	ug/kg	C	U
Diethyl phthalate	500.000	ug/kg	D	UJ	450.000	ug/kg	C	UJ
Dimethyl phthalate	500.000	ug/kg	D	U	450.000	ug/kg	C	U
Fluoranthene	1400.000	ug/kg	D	-	450.000	ug/kg	C	U
Fluorene	500.000	ug/kg	D	U	450.000	ug/kg	C	U
Hexachlorobenzene	500.000	ug/kg	D	U	450.000	ug/kg	C	U
Hexachlorobutadiene	500.000	ug/kg	D	U	450.000	ug/kg	C	U
Hexachlorocyclopentadiene	500.000	ug/kg	D	U	450.000	ug/kg	C	U
Hexachloroethane	500.000	ug/kg	D	U	450.000	ug/kg	C	U
Indeno(1,2,3-cd)pyrene	310.000	ug/kg	D	J	450.000	ug/kg	C	U
Isophorone	500.000	ug/kg	D	U	450.000	ug/kg	C	U
N-Nitroso-di-n-propylamine	500.000	ug/kg	D	U	450.000	ug/kg	C	U
N-Nitrosodiphenylamine	500.000	ug/kg	D	U	450.000	ug/kg	C	U
Naphthalene	500.000	ug/kg	D	U	450.000	ug/kg	C	U
Nitrobenzene	500.000	ug/kg	D	U	450.000	ug/kg	C	U
Pentachlorophenol	1200.000	ug/kg	D	U	1100.000	ug/kg	C	U
Phenanthrene	1000.000	ug/kg	D	-	450.000	ug/kg	C	U
Phenol	500.000	ug/kg	D	U	450.000	ug/kg	C	U

000260

6508

TABLE C-9
(Continued)

PHASE II - CHEMICAL PARAMETERS

BORING NUMBER	SWL-SD-02				SWL-SD-01			
SAMPLE NUMBER	111325				111328			
SAMPLING DATE	04/06/93				04/08/93			
CHEMICAL PARAMETERS	RESULTS	UNITS	L	VQ	RESULTS	UNITS	L	VQ
Semivolatile Organics								
Pyrene	990.000	ug/kg	D	-	58.000	ug/kg	C	J
bis(2-Chloroethoxy)methane	500.000	ug/kg	D	U	450.000	ug/kg	C	U
bis(2-Chloroethyl)ether	500.000	ug/kg	D	U	450.000	ug/kg	C	U
bis(2-Chloroisopropyl) ether	500.000	ug/kg	D	U	450.000	ug/kg	C	U
bis(2-Ethylhexyl) phthalate	53.000	ug/kg	D	J	450.000	ug/kg	C	U
p-Chloroaniline	500.000	ug/kg	D	U	450.000	ug/kg	C	U
Pesticide Organics/PCBs								
4,4'-DDD	5.000	ug/kg	D	UJ	4.500	ug/kg	C	UJ
4,4'-DDE	5.000	ug/kg	D	U	4.500	ug/kg	C	U
4,4'-DDT	5.000	ug/kg	D	U	4.500	ug/kg	C	U
Aldrin	2.600	ug/kg	D	U	2.300	ug/kg	C	U
Aroclor-1016	50.000	ug/kg	D	U	45.000	ug/kg	C	U
Aroclor-1221	100.000	ug/kg	D	U	91.000	ug/kg	C	U
Aroclor-1232	50.000	ug/kg	D	U	45.000	ug/kg	C	U
Aroclor-1242	50.000	ug/kg	D	U	45.000	ug/kg	C	U
Aroclor-1248	50.000	ug/kg	D	U	45.000	ug/kg	C	U
Aroclor-1254	50.000	ug/kg	D	U	45.000	ug/kg	C	U
Aroclor-1260	50.000	ug/kg	D	U	45.000	ug/kg	C	U
Dieldrin	5.000	ug/kg	D	U	4.500	ug/kg	C	U
Endosulfan II	5.000	ug/kg	D	U	4.500	ug/kg	C	U
Endosulfan sulfate	5.000	ug/kg	D	U	4.500	ug/kg	C	U
Endosulfan-I	2.600	ug/kg	D	U	2.300	ug/kg	C	U
Endrin	5.000	ug/kg	D	U	4.500	ug/kg	C	U
Endrin aldehyde	5.000	ug/kg	D	U	4.500	ug/kg	C	U
Endrin ketone	5.000	ug/kg	D	U	4.500	ug/kg	C	U
Heptachlor	2.600	ug/kg	D	U	2.300	ug/kg	C	U
Heptachlor epoxide	2.600	ug/kg	D	U	2.300	ug/kg	C	U
Methoxychlor	26.000	ug/kg	D	U	23.000	ug/kg	C	U
Toxaphene	260.000	ug/kg	D	U	230.000	ug/kg	C	U
alpha-BHC	2.600	ug/kg	D	U	2.300	ug/kg	C	U
alpha-Chlordane	2.600	ug/kg	D	U	2.300	ug/kg	C	U
beta-BHC	2.600	ug/kg	D	U	2.300	ug/kg	C	U
delta-BHC	2.600	ug/kg	D	U	2.300	ug/kg	C	U
gamma-BHC (Lindane)	2.600	ug/kg	D	U	2.300	ug/kg	C	U
gamma-Chlordane	2.600	ug/kg	D	U	2.300	ug/kg	C	U

000261