6543

U-003-303 .26

FERNALD ENVIRONMENTAL MANAGEMENT PROJECT (FEMP) - STACK EMISSION TEST REPORT FOR THE MINIMUM ADDITIVE WASTE STABILIZATION (MAWS) PROJECT

01/25/95

C:EC:95-0014
FERMCO HAMILTON COUNTY
150
REPORT

Fernald Environmental

FERMCO

ration Management Corporation P.O. Box 398704 Cincinnati, Ohio 45239-8704 (513) 738-6200

January 25, 1995

U. S. Department of Energy
Fernald Environmental Management Project
Letter No. C:EC:95-0014

Mr. Lee Gruber
Air Quality Management
Hamilton County Department
of Environmental Services
1632 Central Parkway
Cincinnati, Ohio 45210

Dear Mr. Gruber:

FERNALD ENVIRONMENTAL MANAGEMENT PROJECT (FEMP) - STACK EMISSION TEST REPORT FOR THE MINIMUM ADDITIVE WASTE STABILIZATION (MAWS) PROJECT

Enclosed for your information is the data regarding the performance test of the Minimum Additive Waste Stabilization (MAWS) off-gas system.

As indicated in the Operable Unit 1 Minimum Additive Waste Stabilization Remedial Design Bench-Scale Treatability Study Work Plan, Volume 1, for the MAWS project, samples were collected and recovered from the off-gas effluent stream prior to the stream exiting to the atmosphere. The enclosed test report from International Technology Corporation describes the tests and analyses performed and the results of those tests.

The equipment used in the vitrification process is owned and was operated by GTS Duratek, Inc. (Duratek). Although the detailed operating records were retained by Duratek, FERMCO does have records of the types of materials processed through the vitrification system during its operation, and of the number of hours of operation of the off-gas ventilation system. This information is summarized in the attached tables.

G:\PR\KOK\MAWS\DOES-IT.LTR

Fernald Environmental
FERMCO
Restoration Management Corporation

If you have questions regarding this submittal, please contact Kip Klee of my staff at 738-8640.

Sincerely,

Terence D. Hagen, Director
Environmental Compliance

TDH:KOK:mhv
Enclosures:
1. Plant 9 MAWS Operation Summary
2. IT Test Report

c: **With Enclosures**

R. B. Allen, DOE-FN/MS45 - w/enclosure 1 only
W. J. Quaider, DOE-FN/MS45 - w/enclosure 1 only
S. H. Wolinsky, FERMCO/MS82-2 - w/enclosure 1 only
AR Coordinator, MS78 - w/enclosure 1 only
File Record Storage Copy 108.13 - w/enclosure 1 only
Project File 114.15

Without Enclosures

N. K. Akgündüz, FERMCO/MS82-2
S. M. Beckman, FERMCO/MS65-2
R. H. Frost, FERMCO/MS82-2
D. M. Garrett, FERMCO/MS73
R. D. Gimpel, FERMCO/MS82-2
P. A. Shanks, FERMCO/MS51
M. C. Skriba, FERMCO/MS82-2
P. B. Spotts, FERMCO/MS65-2
D. E. Williamson, FERMCO/MS82-2

G:\PR\KOK\MAWS\DOES-IT.LTR

SUMMARY OF PLANT 9 MAWS OPERATION		
Dates	Vitrifier Off-Gas * Ventilation System - Hours of Operation	Material in Vitrifier
12/1/93 - 12/31/93	Start-up - hours not recorded	Non-radioactive Borosilicate glass
1/3/94 - 1/8/94	98 hours	Non-radioactive Fluoride surrogate material
1/9/94 - 1/15/94	168 hours	Non-radioactive Borosilicate glass
1/16/94 - 1/22/94	168 hours	"
1/23/94 - 1/29/94	168 hours	"
1/30/94 - 1/31/94	48 hours	"
2/1/94 - 2/5/94	120 hours	Non-Radioactive Borosilicate glass
2/6/94 - 2/12/94	168 hours	"
2/13/94 - 2/19/94	168 hours	"
2/20/94 - 2/26/94	168 hours	"
2/27/94 - 2/28/94	48 hours	"
3/1/94 - 3/6/94	144 hours	Non-Radioactive Borosilicate glass
3/7/94 - 3/13/94	39 hours	"
3/14/94 - 3/20/94	129.5 hours	"
3/21/94 - 3/27/94	168 hours	"
3/28/94 - 3/31/94	96 hours	"
4/1/94 - 4/7/94	82 hours	Non-Radioactive Borosilicate glass
4/8/94 - 4/14/94	82.5 hours	"
4/15/94 - 4/21/94	158.5 hours	"
4/22/94 - 4/28/94	35 hours	"
4/29/94 - 4/30/94	48 hours	"

SUMMARY OF PLANT 9 MAWS OPERATION		
Dates	Vitrifier Off-Gas * Ventilation System - Hours of Operation	Material in Vitrifier
5/1/94 - 5/7/94	143.5 hours	Non-Radioactive Fluoride surrogate material
5/8/94 - 5/14/94	168 hours	Non-Radioactive Borosilicate surrogate material
5/15/94 - 5/21/94	168 hours	"
5/22/94 - 5/28/94	168 hours	"
5/29/94 - 5/31/94	72 hours	"
6/1/94 - 6/5/94	120 hours	Non-Radioactive Borosilicate surrogate material
6/6/94 - 6/12/94	168 hours	"
6/13/94 - 6/19/94	168 hours	"
6/20/94 - 6/26/94	168 hours	"
6/27/94 - 6/30/94	96 hours	"
7/1/94 - 7/3/94	72 hours	Non-Radioactive Borosilicate surrogate material
7/4/94 - 7/10/94	168 hours	"
7/11/94 - 7/17/94	168 hours	"
7/18/94 - 7/24/94	168 hours	"
7/25/94 - 7/31/94	168 hours	Radioactive material from Waste Pit 5
8/1/94 - 8/7/94	168 hours	Radioactive material from Waste Pit 5
8/8/94 - 8/14/94	168 hours	Non-Radioactive borosilicate surrogate material
8/15/94 - 8/21/94	8 hours	"
8/22/94 - 8/28/94	0 hours	No molten material in the melter
8/29/94 - 8/31/94	0 hours	"

SUMMARY OF PLANT 9 MAWS OPERATION		
Dates	Vitrifier Off-Gas * Ventilation System - Hours of Operation	Material in Vitrifier
9/1/94 - 9/4/94	58 hours	Radioactive material from Waste Pit 5
9/5/94 - 9/11/94	168 hours	"
9/12/94 - 9/18/94	168 hours	"
9/19/94 - 9/25/94	168 hours	"
9/26/94 - 9/30/94	120 hours	"
10/1/94 - 10/7/94	134 hours	Radioactive material from Waste Pit 5 and Non-Radioactive Borosilicate surrogate material
10/8/94 - 10/14/94	0 hours	No molten material in the melter
10/15/94 - 10/21/94	0 hours	"
10/22/94 - 10/28/94	140 hours	Non-Radioactive Borosilicate surrogate material
10/29/94 - 10/31/94	72 hours	Non-Radioactive Borosilicate surrogate material and Radioactive material from Waste Pit 5
11/1/94 - 11/5/94	120 hours	Radioactive material from Waste Pit 5
11/6/94 - 11/12/94	168 hours	"
11/13/94 - 11/19/94	168 hours	Non-Radioactive Borosilicate surrogate material
11/20/94 - 11/26/94	31.5 hours	Empty
11/27/94 - 11/30/94	0 hours	"

* The operational time does not directly correspond to the process material feeding time, i.e., feeding is intermitent and the ventilation system was in operation for longer period than the feeding period.

6543

INTERNATIONAL TECHNOLOGY CORPORATION

EMISSION TEST REPORT
COMPLIANCE EVALUATION

VITRIFICATION SYSTEM
PLANT 9
FERNALD ENVIRONMENTAL MANAGEMENT PROJECT

RESPONSIVE TO THE NEEDS OF ENVIRONMENTAL MANAGEMENT

EMISSION TEST REPORT
COMPLIANCE EVALUATION

VITRIFICATION SYSTEM
PLANT 9
FERNALD ENVIRONMENTAL
MANAGEMENT PROJECT
FERNALD, OHIO

August/September 1994

by

IT Air Quality Services
11499 Chester Road
Cincinnati, Ohio 45246

JTN 332331

Table of Contents

		Page
1.0	Introduction	1-1
2.0	Summary of Results	2-1
2.1	Stack Gas Conditions	2-1
2.2	Filterable Particulate	2-1
2.3	Total Metals	2-1
2.4	Activity Levels and Total Uranium	2-1
2.5	Total Fluorides	2-4
2.6	Hydrochloric Acid	2-4
2.7	Nitrogen Oxides	2-4
2.8	Sulfur Dioxide	2-6
2.9	Carbon Monoxide and Total Hydrocarbons	2-6
3.0	Quality Assurance	3-1
3.1	Particulate	3-1
3.2	Metals	3-1
3.3	Radionuclides	3-1
3.4	Total Fluorides	3-5
3.5	Hydrochloric Acid	3-5
3.6	NO_x	3-5
3.7	SO_2	3-5
3.8	CO and THC	3-5
4.0	Process Description and Operation	4-1
5.0	Sampling Location and Test Methods	5-1
5.1	Velocity and Gas Temperature	5-1
5.2	Molecular Weight	5-1
5.3	Moisture	5-1
5.4	Particulate/Metals	5-1
5.5	Radionuclides	5-3
5.6	Total Fluorides	5-3
5.7	Hydrochloric Acid	5-4
5.8	Nitrogen Oxides	5-4
5.9	Sulfur Dioxide	5-4
5.10	Carbon Monoxide and Total Hydrocarbons	5-4

Table of Contents (continued)

Page

Appendices

A Calculations A-1
B Field Data B-1
C Laboratory Data C-1
D Sampling and Analytical Procedures D-1
E Calibration Procedures and Results E-1

1.0 Introduction

On August 4 and 8, and September 14, 1994, personnel from IT Corporation conducted atmospheric emission tests at the Fernald Environmental Management Project (FEMP) in Fernald, Ohio. This test program was conducted to collect data that will enable Fernald Environment Restoration and Management Company (FERMCo) personnel to determine the compliance status of the source with regard to Item D of the Clean Air Act section of the Federal Facilities Compliance Agreement and Section H of the National Emission Standards for Hazardous Air Pollutants.* Testing was conducted at the Plant 9 vitrification system exhaust stack to determine the concentrations and emission rates of particulate matter, metals, radionuclides, nitrogen oxides (NO_x), sulfur dioxide (SO_2), total fluorides, hydrochloric acid (HCl), carbon monoxide (CO), and total hydrocarbons (THC). Flow rate, temperature, moisture, and carbon dioxide (CO_2) and oxygen (O_2) contents of the stack gas also were measured. The sampling and analytical procedures followed the approved protocol, and included procedures described in U.S. Environmental Protection Agency (EPA) Methods 1 through 6, 7A, 13B, 26** 114,*** and the BIF Methods Manual.**** Plant personnel monitored process operations during each sampling run.

Messrs. Greg Thress and Brian Garls conducted the testing for IT. Mr. Dave Osterhout was the IT Project Manager. Messrs. Dennis Williamson and Tim Miller coordinated the test series for FERMCo.

---

* 40 CFR 61, Subpart H, July 1993.

** 40 CFR 60, Appendix A, July 1993.

*** 40 CFR 61, Appendix B, July 1993.

**** Methods Manual for Compliance With BIF Regulations, EPA/530-SW-91-010, December 1990.

2.0 Summary of Results

2.1 Stack Gas Conditions

Stack gas conditions are summarized in Table 2-1. The flow rates for a given day generally compared well.

2.2 Filterable Particulate

Table 2-2 presents filterable particulate emission data collected during the sampling period. Filterable particulate concentrations are reported in grains per dry standard cubic foot (gr/dscf), and emission rates are reported in pounds per hour (lb/h). The filterable particulate emissions reported in Table 2-2 represent the material collected on the filter and in the probe, which were maintained at a temperature of approximately 250°F during sample collection.

Filterable particulate concentrations averaged 0.0012 gr/dscf, which corresponds to an average emission rate of 0.013 lb/h.

In these particulate samples, the total quantity of filterable material collected was 15.4, 4.3, and 2.1 mg. The last two values are near the blank level, and all three are near IT's general limit of quantitation for U.S. EPA Method 5 (10 to 15 mg.)

2.3 Total Metals

Total metals emissions are summarized in Table 2-3. Barium, lead, and mercury were detected in all three samples, while selenium was detected only in Run V-PM-1. The barium and lead values were all less than five times the detection limit. Because of analytical inaccuracy, results near the detection limit are less reliable than higher-level results.

2.4 Activity Levels and Total Uranium

Table 2-4 presents the data obtained by radiological analysis of the samples. The liquid fractions (acetone and water) from each sample were combined for analysis; the filters were analyzed separately. No activity was detected in the liquid fractions. Alpha and beta activity were detected in the filters, but the values were similar to the blank level. Gamma activity detection limits are those of Cs-137. The values reported in Table 2-4 were determined by adding the sample values or detection limits for the individual sample fractions to obtain total activity per sample, and dividing by the sample volume, thus yielding the activity

Table 2-1
Summary of Stack Gas Conditions
FEMP, Vitrification System (IT JTN 332331)

Run No.	Date (1994)	Time (24-h)	Stack Gas Flow Rate acfm[a]	Stack Gas Flow Rate dscfm[b]	Temperature (°F)	Moisture (%)	Carbon Dioxide[c] (%)	Oxygen[c] (%)
V-R-1	8/4	0933-1036	1140	930	136	6.1	0	21
V-R-2	8/4	1152-1255	1210	1010	135	4.6	0	21
V-R-3	8/4	1323-1426	1200	1000	137	4.2	0	21
Average			1180	980	136	4.9	0	21
V-PM-1	8/8	1000-1203	1410	1250	118	2.1	0	21
V-PM-2	8/8	1215-1422	1460	1280	125	1.9	0	21
V-PM-3	8/8	1510-1713	1530	1350	129	1.1	0	21
Average			1470	1300	124	1.7	0	21
V-F-1	9/14	1242-1347	1560	1360	125	2.8	0	21
V-F-2	9/14	1420-1525	1360	1140	134	4.8	0	21
V-F-3	9/14	1615-1720	1300	1100	136	4.3	0	21
Average			1410	1200	132	4.0	0	21

[a] acfm = Actual cubic feet per minute at stack conditions.

[b] dscfm = Dry standard cubic feet per minute; standard conditions are 68°F and 29.92 in.Hg.

[c] Fyrite analysis, percentage by volume on a dry basis.

Table 2-2
Summary of Filterable Particulate Emissions
FEMP, Vitrification System, August 8, 1994
(IT JTN 332331)

Run No.	Time (24-h)	Concentration (gr/dscf)[a]	Emission Rate (lb/h)[b]
V-PM-1	1000-1203	0.0020	0.022
V-PM-2	1215-1422	0.0011	0.012
V-PM-3	1510-1713	0.0005	0.005
Average		0.0012	0.013

[a] gr/dscf = Grains per dry standard cubic foot.

[b] lb/h = Pounds per hour.

Table 2-3
Summary of Total Metals Emissions
FEMP, Vitrification System, August 8, 1994 (IT JTN 332331)

	Run No. V-PM-1		Run No. V-PM-2		Run No. V-PM-3		Average	
Metal	Concen-tration ($\mu g/dNm^3$)[a]	Emission Rate (lb/h)[b]	Concen-tration ($\mu g/dNm^3$)	Emission Rate (lb/h)	Concen-tration ($\mu g/dNm^3$)	Emission Rate (lb/h)	Concen-tration ($\mu g/dNm^3$)	Emission Rate (lb/h)
Arsenic	<1.5	$<7.1\times10^{-6}$	<2.9	$<1.4\times10^{-5}$	<2.5	$<1.3\times10^{-5}$	<2.3	$<1.1\times10^{-5}$
Barium	0.91[c]	4.2×10^{-6}[c]	1.5[c]	7.1×10^{-6}[c]	1.5[c]	7.6×10^{-6}[c]	1.3	6.3×10^{-6}
Beryllium	<0.15	$<7.1\times10^{-7}$	<0.29	$<1.4\times10^{-6}$	<0.25	$<1.3\times10^{-6}$	<0.23	$<1.1\times10^{-6}$
Cadmium	<0.75	$<3.5\times10^{-6}$	<1.5	$<7.1\times10^{-6}$	<1.3	$<6.4\times10^{-6}$	<1.2	$<5.7\times10^{-6}$
Chromium	<1.5	$<7.1\times10^{-6}$	<2.9	$<1.4\times10^{-5}$	<2.5	$<1.3\times10^{-5}$	<2.3	$<1.1\times10^{-5}$
Lead	0.30[c]	1.4×10^{-6}[c]	0.88[c]	4.3×10^{-6}[c]	0.76[c]	3.8×10^{-6}[c]	0.65	3.2×10^{-6}
Mercury	2.0	9.5×10^{-6}	5.2	2.5×10^{-5}	0.70	3.6×10^{-6}	2.7	1.3×10^{-5}
Selenium	3.0	1.4×10^{-5}	<0.59	$<2.8\times10^{-6}$[c]	<0.50	$<2.5\times10^{-6}$	<1.4	$<6.5\times10^{-6}$
Silver	<0.75	$<3.5\times10^{-6}$	<1.5	$<7.1\times10^{-6}$	<1.3	$<6.4\times10^{-6}$	<1.2	$<5.7\times10^{-6}$

[a] µg/dNm3 = Micrograms per dry normal cubic meter.

[b] lb/h = Pounds per hour.

[c] Less than five times the detection limit.

Table 2-4
Summary of Activity Levels and Total Uranium Emissions
FEMP, Vitrification System, August 4, 1994 (IT JTN 332331)

		Activity Concentration (pCi/dscf)[a]			Total Uranium Emissions	
Run No.	Time (24-h)	Alpha	Beta	Gamma	Concentration ($\mu g/dNm^3$)[b]	Emission Rate (lb/h)[c]
V-R-1	0933-1036	≤0.16	≤0.07	<0.43	<3.6	$<1.2\times10^{-5}$
V-R-2	1152-1255	≤0.14	≤0.09	<0.51	<3.3	$<1.3\times10^{-5}$
V-R-3	1323-1426	≤0.16	≤0.08	<0.49	<3.4	$<1.3\times10^{-5}$
Average		≤0.15	≤0.08	<0.47	<3.4	$<1.2\times10^{-5}$

[a] pCi/dscf = Picocuries per dry standard cubic foot.

[b] $\mu g/dNm^3$ = Micrograms per dry normal cubic meter.

[c] lb/h = Pounds per hour.

concentration for each sample in picocuries/dscf. Less-than-or-equal-to symbols (≤) were used when activity was detected in one fraction but not in the other. The uranium emission values in Table 2-4 were obtained in the manner described above, except on a mass basis.

Because the acetone and water volumes were not recorded for these samples, in order to calculate the activity and mass of uranium in each sample, the volumes were estimated based on notes on the Chain-of-Custody forms. Since all values were less than the detection limits or near the blank levels, and the detection limits for the liquids are significantly less than those for the filters, the data are not considered to be affected.

2.5 Total Fluorides

Total fluoride emissions are summarized in Table 2-5. Total fluoride concentration averaged 7.6 ppm, with an average emission rate of 0.027 lb/h as fluoride.

Table 2-5
Summary of Total Fluoride Emissions
FEMP, Vitrification System, August 8, 1994 (IT JTN 332331)

Run No.	Time (24-h)	Concentration (ppm)[a]	Emission Rate (lb/h)[b]
V-F-1	1242-1347	6.1	0.025
V-F-2	1420-1525	8.6	0.029
V-F-3	1615-1720	8.1	0.026
Average		7.6	0.027

[a] Parts per million by volume as fluoride on a dry basis.

[b] Pounds per hour as fluoride.

2.6 Hydrochloric Acid

HCl emissions are summarized in Table 2-6. HCl was not detected in any of the samples. The detection limit corresponds to an average concentration of 1.4 ppm and an average emission rate of 0.009 lb/h.

2.7 Nitrogen Oxides

Table 2-7 summarizes NO_x emissions. NO_x was not detected in any of the samples. The detection limit corresponds to an average concentration of 9 ppm and an emission rate of 0.1 lb/h.

Table 2-6
Summary of HCl Emissions
FEMP, Vitrification System, August 4, 1994 (IT JTN 332331)

Run No.	Time (24-h)	Concentration (ppm)[a]	Emission Rate (lb/h)[b]
V-C-1	1242-1347	<1.3	<0.010
V-C-2	1420-1525	<1.3	<0.008
V-C-3	1615-1720	<1.5	<0.009
Average		<1.4	<0.009

[a] Parts per million by volume on a dry basis.

[b] Pounds per hour.

Table 2-7
Summary of NO_x Emissions
FEMP, Vitrification System, August 4, 1994 (IT JTN 332331)

Run No.	Time (24-h)	Concentration (ppm)[a]	Emission Rate (lb/h)[b]
V-N-1A	0943	<8	<0.1
V-N-1B	0958	<9	<0.1
V-N-1C	1015	<9	<0.1
V-N-1D	1030	<9	<0.1
Average		<9	<0.1
V-N-2A	1202	<9	<0.1
V-N-2B	1217	<10	<0.1
V-N-2C	1232	<7	<0.1
V-N-2D	1247	<9	<0.1
Average		<9	<0.1
V-N-3A	1335	<7	<0.1
V-N-3B	1350	<8	<0.1
V-N-3C	1405	<8	<0.1
V-N-3D	1420	<8	<0.1
Average		<8	<0.1
Overall average		<9	<0.1

[a] Concentration in parts per million by volume on a dry basis.

[b] lb/h = Pounds per hour.

2.8 Sulfur Dioxide

Table 2-8 summarizes SO_2 emissions. SO_2 was found only at levels below the specified detection limit of 1.3 ppm. This corresponds to an emission rate of 0.016 lb/h.

2.9 Carbon Monoxide and Total Hydrocarbons

CO and THC emissions are summarized in Table 2-9. CO concentrations averaged 10 ppm, which corresponds to an average emission rate of 0.044 lb/h. THC concentrations averaged 9.3 ppm (as propane), which corresponds to an average emission rate of 0.063 lb/h (as propane). CO and THC data were consistent.

Table 2-8
Summary of SO_2 Emissions
FEMP, Vitrification System, August 8, 1994 (IT JTN 332331)

Run No.	Time (24-h)	Concentration (ppm)[a]	Emission Rate (lb/h)[b]
V-S-1A	1000-1020	<1.3	<0.016
V-S-1B	1030-1050	<1.3	<0.016
Average		<1.3	<0.016
V-S-2A	1100-1120	<1.3	<0.016
V-S-2B	1130-1150	<1.3	<0.016
Average		<1.3	<0.016
V-S-3A	1215-1235	<1.3	<0.017
V-S-3B	1245-1305	<1.3	<0.017
Average		<1.3	<0.017
Overall average		<1.3	<0.016

[a] Concentration in parts per million by volume on a dry basis.

[b] lb/h = Pounds per hour.

Table 2-9
Summary of CO and THC Emissions
FEMP, Vitrification System, August 4, 1994 (IT JTN 332331)

		Concentration (ppm)[a]		Emission Rate (lb/h)[b]	
Run No.	Time (24-h)	CO	THC[c]	CO	THC[c]
V-HC-1	0935-1035	12	9.5	0.049	0.061
V-HC-2	1152-1255	8	9.0	0.035	0.062
V-HC-3	1323-1426	11	9.5	0.048	0.065
Average		10	9.3	0.044	0.063

[a] Concentrations in parts per million by volume on a dry basis.

[b] Pounds per hour; $\frac{(\text{ppm})(\text{MW})(\text{dry standard cubic feet per minute})(60)}{(385.3)(10^6)}$;

$MW_{CO} = 28.01$; $MW_{propane} = 44.09$.

[c] As propane.

3.0 Quality Assurance

Routine standard reference method quality control (QC) procedures were followed throughout this test series. Sampling equipment, reagents, and analytical procedures used in this test series were set up to meet all necessary guidelines set forth for achieving accurate test results. All manual method sampling equipment was calibrated within the limits described in U.S. EPA Method 5. These calibration data are summarized in Table 3-1. All isokinetic sampling rates were within the limits specified in Method 5 (90 to 110 percent).

3.1 Particulate

Table 3-2 outlines the results obtained from the filter and acetone blank analyses. Sample results were not corrected for blanks.

3.2 Metals

Table 3-3 summarizes quality assurance/quality control (QA/QC) data for the stack sample metals analyses. A field blank was obtained by assembling and leak-checking the sampling train and recovering and analyzing it as a sample. No blank corrections were applied to the emissions data. The barium and selenium values for the field blank were near the detection limit. The values for all three metals detected in the field blank were near the sample values.

3.3 Radionuclides

No alpha, beta, or gamma activity was detected in the acetone/water blank. Alpha and beta activities were detected in the filter blank at levels near the sample values. No gamma activity was detected in the filter blank. No alpha, beta, or gamma activity was detected in either of two laboratory quality control blanks. Laboratory control spike analysis results show 128 and 93 percent recovery for alpha activity, 109 and 95 percent recovery for beta activity, and 101 and 105 percent recovery for gamma activity.

Total uranium was not detected in the filter blank, but was detected in the acetone/water blank at a level less than two times the detection limit. This is insignificant since uranium was not detected in any sample fractions. Uranium was not detected in either of two laboratory quality control blanks. Laboratory control spike analysis results show 114 and 119 percent recovery for total uranium.

Table 3-1
Field Equipment Calibration
FEMP, Vitrification System (IT JTN 332331)
(page 1 of 2)

Equipment	ID No.	Calibration Device	Allowable Variance	Actual Variance	Comments
Meter box	FT-5	Wet test meter	Y ±0.02	0.010	Pretest (maximum deviation)
			ΔH@ ±0.15	0.01	Pretest (maximum deviation)
			(Y ±0.05 Y posttest)	0.010	Pre- versus posttest
		Critical orifice	Y ±0.05	0.027	Checked on site prior to testing
			ΔH@ ±0.15	0.11	Checked on site prior to testing
	FT-8			0.009	Pretest (maximum deviation)
				0.05	Pretest (maximum deviation)
				0.018	Pre- versus posttest
				0.010	Checked on site prior to testing
				0.06	Checked on site prior to testing
	FT-9			0.005	Pretest (maximum deviation)
				0.07	Pretest (maximum deviation)
				0.008	Pre- versus posttest
				0.008	Checked on site prior to testing
				0.02	Checked on site prior to testing
	FT-11			0.006	Pretest (maximum deviation)
				0.05	Pretest (maximum deviation)
				0.000	Pre- versus posttest
				0.007	Checked on site prior to testing
				0.05	Checked on site prior to testing
Pitot tube	002	Geometric specifications	a	a	Visually inspected on site
	300			a	Visually inspected on site
	502			a	Visually inspected on site
Digital indicator	FT-5	Millivolt signals	±0.5%	0.2%	Pretest (maximum deviation)
				0.2%	Checked on site prior to testing
	FT-8			0.5%	Pretest (maximum deviation)
				0.3%	Checked on site prior to testing
	FT-9			0.5%	Pretest (maximum deviation)
				0.2%	Checked on site prior to testing
	FT-11			0.4%	Pretest (maximum deviation)
				0.2%	Checked on site prior to testing
Stack thermo-couple	100	ASTM-3F	±1.5%	0.4%	Pretest (maximum deviation)
	425			0.2%	Pretest (maximum deviation)
	432			0.5%	Pretest (maximum deviation)
Impinger ther-mocouple	I-1	ASTM-3F	±2°F	2°F	Pretest (maximum deviation)
	I-6			2°F	Pretest (maximum deviation)
	I-97			1°F	Pretest (maximum deviation)
Balance	421	Type-S weights	±0.5 g	0.3 g	Pretest
Barometer	431	NBS-traceable barometer	±0.10 in.Hg	0.01 in.Hg	Pretest
			(±0.20 in.Hg, posttest)	(0.05 in.Hg)	Posttest
				0.00 in.Hg	Pretest
				(0.01 in.Hg)	Posttest

Table 3-1
(page 2 of 2)

Equipment	ID No.	Calibration Device	Allowable Variance	Actual Variance	Comments
Dry gas thermocouple	FT-5	ASTM-3F	±5°F	2°F	Inlet (pretest, maximum deviation)
				2°F	Outlet (pretest, maximum deviation)
	FT-8			2°F	Inlet (pretest, maximum deviation)
				2°F	Outlet (pretest, maximum deviation)
	FT-9			2°F	Inlet (pretest, maximum deviation)
				3°F	Outlet (pretest, maximum deviation)
	FT-11			2°F	Inlet (pretest, maximum deviation)
				2°F	Outlet (pretest, maximum deviation)
Probe nozzle	5-102	Caliper	Dn ±0.004 in.	0.001 in.	Maximum deviation
	5-104			0.000 in.	Maximum deviation
	5-107			0.001 in.	Maximum deviation
	5-110			0.001 in.	Maximum deviation
	G-101			0.002 in.	Maximum deviation
	G-411			0.001 in.	Maximum deviation
	G-420			0.000 in.	Maximum deviation

[a] See Appendix E.

Table 3-2
Filter and Reagent Blank Analyses
FEMP, Vitrification System (IT JTN 332331)

Blank Type	Blank Value
Filter	1.9 mg
Acetone	-0.0018 mg/g[a]

[a] Maximum allowable blank correction is 0.01 mg/g; no correction was made for the acetone blank.

Table 3-3
Summary of Stack Sample Metals QA/QC Data
FEMP, Vitrification System (IT JTN 332331)

Metal	Method[a]	Field Blank Composite (μg)	Method Blank (μg)	Detection Limit (μg)
Arsenic	AA	ND[b]	ND	5.0
Barium	ICP	2.5	ND	1.0
Beryllium	ICP	ND	ND	0.5
Cadmium	ICP	ND	ND	2.5
Chromium	ICP	ND	ND	5.0
Lead	AA	ND	ND	1.0
Mercury	CVAA	ND,[c] 2.5,[d] 1.3[e]	ND	0.2
Selenium	AA	3.0	ND	1.0
Silver	ICP	ND	ND	2.5

[a] AA = Atomic absorption spectroscopy; ICP = inductively coupled plasma spectroscopy; CVAA = cold-vapor atomic absorption spectroscopy.

[b] ND = Not detected.

[c] Metals composite.

[d] Potassium permanganate solution.

[e] HCl rinse.

3.4 Total Fluorides

Fluorides were not detected in the reagent blank. All sample values were within 2.5 times the estimated quantitation limit.

3.5 Hydrochloric Acid

HCl was not detected in the samples or reagent blanks. Analysis of a laboratory control sample showed 92 percent recovery.

3.6 NO_x

NO_x was not detected in samples, the reagent blank, or the method blank.

3.7 SO_2

SO_2 was not detected in the samples or reagent blanks at a level above the specified detection limit.

3.8 CO and THC

The instruments used to analyze bag samples for CO and THC were calibrated before and after the analyses were performed.

4.0 Process Description and Operation

The vitrification system uses a joule-heated melter capable of melting a wide range of low-conductivity waste materials with minimal additives at moderate temperatures and designed to produce a consistent stabilized glass with minimal effluent. The melter is lined with high-temperature refractory bricks and generally operates in the range of 1050 to 1200°C, although it is designed to operate at 1400°C. The unit includes Inconel 690 electrodes. The 300-kg/day system has a nominal operating volume of about 60 liters of molten glass.

During melter operation, air is introduced into the lift tube to lift the glass to the exit chamber. The molten glass is fed to a "gem"-making machine to produce flattened glass hemispheres about 1 to 2 cm in diameter that can be stored in drums or boxes. Melter and melt chamber temperatures are controlled by power adjustments to the joule heater and supplemental area heaters.

An off-gas system is used to treat the effluent gases from the melter. The system is composed of standard industry components and includes a quencher to reduce the melter off-gas temperature, a scrubber, a demister, a heater, a high-efficiency particulate air (HEPA) filter, and a blower. The off-gas is discharged to the atmosphere via a stack with an isokinetic sampler.

5.0 Sampling Location and Test Methods

Sampling was conducted in the exit stack following the emission control system that treats the exhaust gases from the vitrification system. A stack diagram is shown in Figure 5-1. Two sampling ports were located 5.0 stack diameters downstream and 1.9 stack diameters upstream from the nearest flow disturbances in the 13-inch inside-diameter stack. Twenty-four sampling points (12 per port) were used to traverse the cross section of the stack for the particulate/metals and radionuclides tests. NO_x, SO_2, and bag samples were collected at a single point in the stack. The sampling point locations are shown in Appendix B.

A cyclonic flow check was conducted prior to testing; the flow was found to be acceptable. The test methods used are described briefly in the following subsections. Detailed descriptions of the sampling and analytical procedures are presented in Appendix D.

5.1 Gas Velocity and Temperature

Stack gas velocity was measured with a Type-S pitot tube and a 0- to 10-inch inclined manometer. Procedures described in EPA Method 2 were used to measure velocities at each sampling point across the stack. Temperatures were measured at each point by a thermocouple and digital readout.

5.2 Molecular Weight

The stack gas composition and molecular weight were determined by EPA Method 3. A Fyrite gas analyzer was used to conduct analyses for determining CO and O_2 content.

5.3 Moisture

The stack gas moisture content was determined by EPA Method 4. Testing was conducted simultaneously with particulate/metals and radionuclide testing.

5.4 Particulate/Metals

Particulate/metals samples were collected as specified in Subsection 3.1 of the BIF Methods Manual. The sampling train used to collect the stack samples consisted of a glass nozzle, a heated glass-lined probe, a heated 3-in.-diameter quartz-fiber filter (Pallflex 2500 QAT-UP), and a series of six Greenburg-Smith impingers. The first two impingers contained a nitric acid/hydrogen peroxide solution, the third was empty, the fourth and fifth contained a potassium permanganate/sulfuric acid solution, and the sixth contained silica gel.

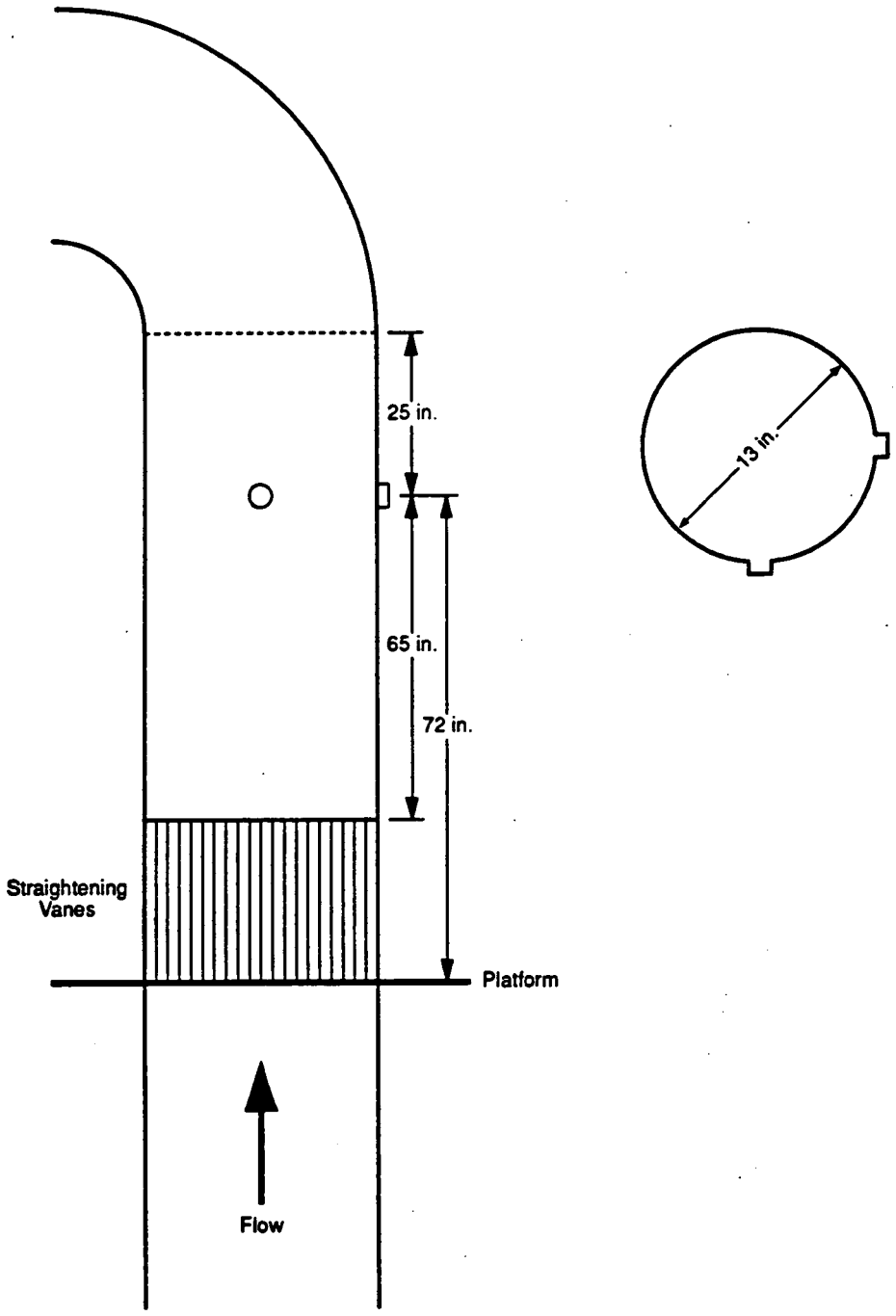

DRAWING NO. M-332331-994-2

DRAWING BY JEM 9/6/94

CHECKED BY

APPROVED BY

INTERNATIONAL TECHNOLOGY CORPORATION

Figure 5-1.
Vitrification Exhaust
Sampling Location.

At the end of each test, the nozzle, probe, and filter holder portions of the train were rinsed with acetone and 0.1 N nitric acid into separate containers. To determine the particulate concentration, the acetone rinse was dried at room temperature, and this residue and the particulate caught on the filter media were desiccated to a constant weight and weighed on an analytical balance. Total filterable particulate matter was determined by adding these two values. Upon completion of the gravimetric analysis, the filter, probe rinse residue, and nitric acid/hydrogen peroxide impinger solution were digested in accordance with method procedures. The digestates were combined and an aliquot was analyzed for barium, beryllium, cadmium, chromium, and silver by inductively coupled plasma spectroscopy (ICP). Separate aliquots were analyzed for arsenic, lead, and selenium by atomic absorption spectroscopy (AA). An additional aliquot was further digested and analyzed for mercury by cold vapor atomic absorption spectroscopy (CVAA). The potassium permanganate/sulfuric acid impinger solution and 8 N HCl impinger rinse were digested and analyzed for mercury by CVAA.

5.5 Radionuclides

Samples for radionuclide analysis were collected in accordance with procedures described in EPA Method 5. A sampling train consisting of a stainless steel nozzle, a heated glass-lined probe, a heated 3-in.-diameter glass-fiber filter (Whatman Reeve Angel 934 AH), and a series of Greenburg-Smith impingers was used for each test. Sampling was conducted isokinetically by regulating the sampling rate relative to the flue gas velocity as measured by the pitot tube attached to the sampling probe. The filter was recovered; the nozzle, probe, and filter holder portions of the sampling train were acetone-rinsed; and the water in the impingers was recovered at the end of each test. The sample fractions were combined and analyzed for gross alpha, gross beta, and gamma activity and total uranium in accordance with procedures described in EPA Method 114. Gross alpha and beta activity were determined by gas flow proportional counting (Methods A-4 and B-4, respectively), gamma activity was determined by high-resolution germanium gamma spectroscopy (Method G-1), and total uranium was determined by laser phosphoremetry. Although laser phosphoremetry is not mentioned in EPA Method 114, it is an EPA-approved method.

5.6 Total Fluorides

Samples for total fluoride analysis were collected in accordance with procedures described in EPA Method 13B. A sampling train consisting of a stainless steel nozzle, a heated glass-lined probe, a series of Greenburg-Smith impingers, and a 3-in.-diameter paper filter (Whatman No. 1) was used for each test. Sampling was conducted isokinetically by regulating the

sampling rate relative to the stack gas velocity as measured by the pitot tube attached to the sampling probe. At the end of each test, the water in the impingers was recovered, the filter was placed in the container with the water, and all sample-exposed surfaces were rinsed with water into the same container. The samples were analyzed by specific ion electrode.

5.7 Hydrochloric Acid

HCl sampling was conducted in accordance with procedures described in EPA Method 26. A sampling train consisting of a heated glass-lined probe, a heated 3-in.-diameter quartz-fiber filter (Pallflex 2500 QAT-UP), and a series of Greenburg-Smith impingers was used for each test. Sampling was conducted at a single point at a constant rate. At the end of each test, the 0.1 N sulfuric acid in the impingers was recovered and the impingers were rinsed with water into the same container. The samples were analyzed by ion chromatography.

5.8 Nitrogen Oxides

NO_x sampling was conducted in accordance with procedures described in EPA Method 7A. Three tests were conducted, each consisting of four grab samples. The samples were collected in evacuated flasks containing a dilute sulfuric acid-hydrogen peroxide absorbing solution. NO_x was measured by ion chromatography.

5.9 Sulfur Dioxide

SO_2 sampling was conducted in accordance with procedures described in EPA Method 6. Three tests were conducted, each consisting of two 20-minute sampling runs. After a sample was collected, the train was purged for 10 minutes with ambient air. The samples were analyzed by the barium-thorin titration method.

5.10 Carbon Monoxide and Total Hydrocarbons

Bag samples were collected for CO and THC analysis. The bag samples were analyzed for CO using a hand-held analyzer with an electrochemical sensor, and for THC using a portable flame-ionization analyzer.

APPENDIX A

CALCULATIONS

	Page
Nomenclature and Equations	A-2
Particulate/Metals	A-14
Radionuclides	A-20
Total Fluorides	A-27
HCl	A-32
SO_2	A-33
NO_x	A-35

Nomenclature and Dimensions

A_n = Cross-sectional area of sampling nozzle, sq. ft.

A_s = Cross-sectional area of stack, sq. ft.

B_{ws} = Proportion by volume of water vapor in the gas stream, dimensionless

C = Effluent gas concentration as measured, dry basis, ppm/%

C_{gas} = Effluent gas concentration calibration corrected, dry basis, ppm/%

C_m = Average of initial and final system calibration bias check responses for the upscale calibration gas, ppm/%

C_{ma} = Actual concentration of the upscale calibration gas, ppm/%

C_{NO_x} = NO_x concentration, ppm (manual method)

C'_{NO_x} = Nitrogen oxides concentration as NO_2, pounds per dry standard cubic foot (lb/dscf), manual method

C_o = Average of initial and final system calibration bias check responses for the zero gas, ppm/%

C_{O_2} = Effluent gas concentration oxygen corrected, ppm volume dry

C_{obs} = Average THC concentration indicated by gas analyzer, wet basis, ppm

C_p = Pitot tube coefficient, dimensionless

C_s = Concentration of pollutant matter in stack gas - dry basis, grains per standard cubic foot (gr/dscf)

C'_s = Concentration of pollutant matter in stack gas - dry basis, micrograms per normal cubic meter ($\mu g/m^3$)

C_{SO_2} = Concentration of sulfur dioxide, ppm volume (manual method)

Cl_s = Amount of Cl^- in sample, milligrams per liter (mg/L)

%C = Percent weight of carbon in fuel, dry basis

%CO = Percent of carbon monoxide by volume, dry basis

$\%CO_2$ = Percent of carbon dioxide by volume, dry basis

D_n = Sampling nozzle diameter, in.

F = Factor representing a ratio of the volume of dry gases generated to the calorific value of the fuel combusted, dry standard cubic feet per million Btu of heat input (dscf/10^6 Btu)

GCV = Gross calorific value of the fuel on dry basis, Btu/lb

%H = Percent weight of hydrogen in fuel, dry basis

ΔH = Average pressure drop across the sampling meter flow orifice, inches of water (in. H_2O)

HHV = Higher heating value on an as-received basis, Btu/lb

ISO = Percent of Isokinetic sampling rate, percent

IFR = Incinerator feed rate, wet tons/h

L_a = Maximum acceptable leakage rate for either a pretest leak check or for a leak check following a component change; equal to 0.020 cubic foot per minute or 4% of the average sampling rate, whichever is less

M_d = Dry molecular weight, lb/lb-mole

M_f = Fuel firing rate (measured coal to boiler), lb of coal per hour

M_n = Total amount of pollutant matter collected, mg

M'_n = Total amount of pollutant matter collected, micrograms (μg)

M_s = Molecular weight of stack gas (wet basis), lb/lb-mole

MW = Molecular weight, lb/lb-mole

N = Normality of titrant, eq/liter

%N = Percent weight of nitrogen in fuel, dry basis

$\%N_2$ = Percent of nitrogen by volume, dry basis

$\%O_2$ = Percent of oxygen by volume, dry basis

ΔP = Velocity head of stack gas, in.H_2O

P_{bar} = Barometric pressure, inches of mercury (in.Hg)

P_i and P_f = Initial and final flask pressure, measured as vacuum, in.Hg

P_s = Absolute stack gas pressure, in.Hg

P_{stat} = Static pressure of stack gas, in.H_2O

P_{std} = Gas pressure at standard conditions, in.Hg (29.92 in.Hg)

ppm = Parts per million

pmr = Pollutant mass emission rate, pounds per hour (lb/h)

pmr′ = Pollutant mass emission rate, pounds per million Btu of heat input (10^6 Btu)

pmr_{100} = Pollutant mass emission rate, pounds per 100 pounds of feed (lb/100)

P_{NO_x} = Micrograms NO_x, μg (manual method)

Q_H = Total heat input, 10^6 Btu/h

Q_s = Volumetric flow rate - stack conditions, actual cubic feet per minute (acfm)

$Q_{s_{std}}$ = Volumetric flow rate - dry basis at standard conditions, dry standard cubic feet per minute (dscfm)

%S = Percent weight of sulfur in fuel, dry basis

T_i and T_f = Initial and final flask temperature, °F

T_m = Average temperature of dry gas meter, °R

T_s = Average temperature of stack gas, °R

T_{std} = Temperature at standard conditions, (528°R)

V_a = Volume of aliquot titrated, milliliters (mL)

V_f = Flask volume, mL

V_{lc} = Total volume of liquid collected in impingers and silica gel, mL

V_m = Volume of dry gas sampled at meter conditions, cu. ft.

$V_{m_{std}}$ = Volume of dry gas sampled at standard conditions, cu. ft.

V_{NO_x} = NO_x sample volume, mL (manual method)

V_s = Average stack gas velocity at stack conditions, feet per second (ft/s)

V_{sc} = Volume of sample collected, liters (L)

V_{soln} = Volume of sample solution, mL

V_t = Volume of titrant used, mL

V_{tb} = Volume of titrant used for blank, mL

$V_{w_{std}}$ = Volume of water vapor at standard conditions, scf

Y = Dry gas meter calibration factor, dimensionless

θ = Total sampling time, minutes

NOTE: Standard conditions = 68°F and 29.92 in.Hg

Example Calculations for Pollutant Emissions

1. Volume of dry gas samples corrected to standard conditions.
Note: V_m must be corrected for leakage if any leakage rates exceed L_a.

$$V_{m_{std}} = 17.647 \ x \ V_m \ x \ Y \left[\frac{P_{bar} + \frac{\Delta H}{13.6}}{T_m} \right]$$

2. Volume of water vapor at standard conditions, ft^3.

$$V_{w_{std}} = 0.04707 \ x \ V_{lc}$$

3. Moisture content in stack gas, volume fraction.

$$B_{ws} = \frac{V_{w_{std}}}{(V_{w_{std}} + V_{m_{std}})}$$

4. Dry molecular weight of stack gas.

$$M_d = 0.44 \ x \ \%CO_2 + 0.32 \ x \ \%O_2 + 0.28 \ x \ (\%N_2 + \%CO)$$

5. Molecular weight of stack gas.

$$M_s = M_d \ x \ (1 - B_{ws}) + 18 \ x \ B_{ws}$$

6. Stack velocity at stack conditions, ft/s.

$$V_s = 85.49 \ x \ C_p \ x \ (avg \ \sqrt{\Delta P}) \ x \ \sqrt{\frac{T_s}{P_s \ x \ M_s}}$$

7. Stack gas volumetric flow rate at stack conditions, acfm.
Note: A_s = square feet.

$$Q_s = 60 \ x \ V_s \ x \ A_s$$

8. Dry stack gas volumetric flow rate at standard conditions, dscfm.

$$Q_{s_{std}} = 17.647 \ x \ Q_s \ x \ \frac{P_s}{T_s} \ x \ (1 - B_{ws})$$

Correction Factors

$$17.647 = \left(\frac{T_{std}}{P_{std}}\right)$$

$$0.04707 = \left(\frac{ft^3\ H_2O\ vapor}{mL\ liquid}\right)$$

0.44 = molecular weight of CO_2/100

0.32 = molecular weight of O_2/100

0.28 = molecular weight of N_2/100

18 = molecular weight of water (H_2O)

$$85.49 = \frac{ft}{second}\left[\frac{(lb/lb\ -\ mole)(in.Hg)}{(°R)(in.H_2O)}\right]^{1/2}\ *$$

* 40 CFR 60, Appendix A, Method 2.

Generic.app(LaserJet II)/Flow/sm

Pollutant Emission Rate, lb/h

1a. Concentration in gr/dscf. Note: M_n in milligrams.

$$C_s = 0.01543 \ x \ \frac{M_n}{V_{m_{std}}}$$

1b. Concentration in microgram per cubic meter, $\mu g/m^3$. Note: M'_n in micrograms.

$$C_s' = 35.315 \ x \ \frac{M_n', \ \mu g}{V_{m_{std}}}$$

2a. Pollutant mass emission rate, lb/h. Note: C_s in gr/dscf.

$$pmr = \frac{C_s}{7000} \ x \ Q_{s_{std}} \ x \ 60$$

2b. Pollutant mass emission rate, lb/h. Note: C'_s in $\mu g/m^3$.

$$pmr = C_s' \ x \ (6.243 \ x \ 10^{-11}) \ x \ Q_{s_{std}} \ x \ 60$$

3. Isokinetic sampling rate, %.

$$ISO = \frac{100 \ x \ T_s \ x \left[(0.002669 \ x \ V_{lc}) + \left(\frac{V_m}{T_m} \ x \ Y \ x \left(P_{bar} + \frac{\Delta H}{13.6} \right) \right) \right]}{60 \ x \ \theta \ x \ V_s \ x \ P_s \ x \ A_n}$$

Correction Factors

0.01543	= grains per milligram (gr/mg)
35.315	= cubic feet/cubic meter
7000	= grains per pound (gr/lb)
6.243×10^{-11}	$= \left(\frac{lb}{453.6 \times 10^6 \ \mu g}\right) \times \left(\frac{m^3}{35.315 \ ft^3}\right)$
0.002669*	$= \frac{(in.Hg) \ (ft^3)}{(mL) \ (°R)}$

* 40 CFR 60, Appendix A, Method 5.

Generic.app(LaserJetII)/Pollutant(lb/h)/sm

Concentration, ppm

1. Concentration in parts per million by volume (ppmv).

Note: M_n in mg; $V_{m_{std}}$ in ft^3

$$ppm = \frac{M_n \ x \ 24.04}{V_{m_{std}} \ x \ 0.028317 \ x \ MW}$$

2. Emission rate, lb/h.

$$pmr = \frac{ppm \ x \ MW \ x \ Q_{s_{std}} \ x \ 60}{385.3 \ x \ 10^6}$$

Correction Factors

0.028317	= cubic meters per cubic feet
24.04	= molar volume, milliliters per millimole
10^6	= microliters per liter
385.3	= molar volume, cubic feet per pound-mole

Sulfur Dioxide

1. Mass of sulfur dioxide collected in sample, mg.

$$M_n = 32.03 \ x \ N \ x \ (V_t - V_{tb}) \ x \ \frac{V_{soln}}{V_a}$$

2. Sulfur dioxide concentration, ppm volume.

$$C_{SO_2} = \frac{424.5 \ x \ (V_t - V_{tb}) \ x \ N \ x \ V_{soln}}{V_{m_{std}} \ x \ V_a}$$

3a. Sulfur dioxide mass emission rate, lb/h. Note: C_{SO_2} in ppm.

$$pmr = \frac{C_{SO_2} \ x \ Q_{s_{std}} \ x \ 60 \ x \ 64.06}{385.3 \ x \ 10^6}$$

3b. Sulfur dioxide mass emission rate, lb/h.

$$pmr = \frac{M_n}{V_{m_{std}}} \ x \ \frac{60 \ min/h}{453{,}600 \ mg/lb} \ x \ Q_{s_{std}}$$

4a. Sulfur dioxide mass emission rate, lb/10^6 Btu.

$$pmr' = \frac{pmr}{Q_{s_{std}} \ x \ 60} \ x \ F \ x \left(\frac{20.9}{20.9 - \%O_2}\right)$$

4b. Sulfur dioxide mass emission rate, lb/10^6 Btu.

$$pmr' = \frac{M_n}{V_{m_{std}}} \ x \ \frac{F}{453{,}600 \ mg/lb} \ x \left(\frac{20.9}{20.9 - \%O_2}\right)$$

Generic.app(LaserJetII)/SO2(Manual)/sm

Correction Factors

424.5 $= \left(\frac{32.03\ g}{Equivalent}\right)\left(\frac{g\text{-}mole}{64.06\ g}\right)\left(\frac{24.04\ L}{g\text{-}mole}\right)\left(\frac{ft^3}{28.317\ L}\right)\left(\frac{1000\ mL}{L}\right)$

64.06 = molecular weight of sulfur dioxide, lb/lb-mole

385.3 = molar volume, cubic feet per lb-mole

F* = F-factor, dscf/10^6 Btu

Bituminous coal - 9780
Oil - 9190
Natural gas - 8710

* 40 CFR 60, Appendix A, Method 19.

Generic.app(LaserJetII)/SO2(Manual)/sm

Nitrogen Oxides

1. Nitrogen oxide sample volume, mL.

$$V_{NO_x} = 17.647 \ x \ (V_f - 25) \ x \left[\left(\frac{P_b - P}{T + 460} \right)_f - \left(\frac{P_b - P}{T + 460} \right)_i \right]$$

2. Nitrogen oxides concentration, ppm volume.

$$C_{NO_x} = \frac{522.5 \ x \ P_{NO_x}}{V_{NO_x}}$$

3. Nitrogen oxides concentration, lb/dscf.

$$C'_{NO_x} = \frac{(6.243 \ x \ 10^{-5}) \ x \ P_{NO_x}}{V_{NO_x}}$$

4a. Nitrogen oxides emission rate, lb/h. Note: C'_{NO_x} in lb/dscf.

$$pmr = C'_{NO_x} \ x \ Q_{s_{std}} \ x \ 60$$

4b. Nitrogen oxides emission rate, lb/h. Note: C_{NO_x} in ppm.

$$pmr = \frac{C_{NO_x} \ x \ Q_{s_{std}} \ x \ 60 \ x \ 46.01}{385.3 \ x \ 10^6}$$

5a. Nitrogen oxides emission rate, lb/10^6 Btu. Note: C'_{NO_x} in lb/dscf.

$$pmr' = C'_{NO_x} \ x \ F \ x \left(\frac{20.9}{20.9 - \%O_2} \right)$$

5b. Nitrogen oxides emission rate, lb/10^6 Btu.

$$pmr' = \frac{pmr}{Q_{s_{std}} \ x \ 60} \ x \ F \ x \left(\frac{20.9}{20.9 - \%O_2} \right)$$

Generic.app(LaserJetII)/NOx(Manual)/sm

Correction Factors

522.5 $= \frac{(24.04\ \mu L/\ \mu g\text{-mole})\ (1000\ mL/L)}{(46.01\ \mu g/\ \mu g\ mole)}$

$6.243 \times 10^{-5} = \frac{(28{,}317\ mL/ft^3)}{(10^6\ \mu g/g) \times (453.6\ g/lb)}$

46.01 = molecular weight of NO_2

385.3 = molar volume, ft^3/lb-mole

F* = F-factor, dscf/10^6 Btu

Bituminous coal - 9780
Oil - 9190
Natural gas - 8710

• 40 CFR 60, Appendix A, Method 19.

Generic.app(LaserJetII)/NOx(Manual)/sm

INTERNATIONAL TECHNOLOGY CORPORATION

IT AIR QUALITY SERVICES

validated 8/3/94

EMISSION TEST REPORT

FIELD DATA

Plant: FEMP
Sampling location: Vitrification stack
Test time (start-stop): 1000-1203

Date: 8/8/94
Run number: V-PM-1

Sample type: Particulate/metals
Bar. press. (in. Hg): 29.70
Static press. (in. H20): -0.10
Filter number(s): 9470019
Stack dia. or width (in.): 13.00
Pitot tube coeff.: 0.84
Total H2O collected (ml): 53.0
% O2 by volume (dry): 21.0

Volume correction (cu. ft.): 0.000
Meter calibration factor: 0.970
Data interval (min.): 5.0
Nozzle dia. (in.): 0.373
Stack length (if rectangular) (in.):
Number of traverse points: 24
% CO2 by volume (dry): 0.0
% CO by volume (dry): 0.0

Sample time (min)	Gas meter reading (cu. ft.)	Velocity head ΔP (in. H2O)	Orifice drop actual ΔH (in. H2O)	Stack Temp. (°F)	Dry gas meter temp. (°F) inlet	Dry gas meter temp. (°F) outlet
Start 0.0	Initial: 740.635					
		0.210	3.19	112	72	72
		0.200	3.03	115	74	74
		0.220	3.34	116	76	74
		0.200	3.04	116	76	74
		0.200	3.04	116	76	74
		0.180	2.74	117	80	74
		0.160	2.43	118	80	74
		0.160	2.43	118	80	74
		0.180	2.74	118	82	76
		0.180	2.74	118	82	76
		0.180	2.74	118	82	76
		0.180	2.76	118	84	80
		0.200	3.08	114	84	80
		0.200	3.08	117	86	80
		0.200	3.07	118	86	80
		0.210	3.22	118	86	80
		0.180	2.76	119	86	80
		0.180	2.76	120	88	80
		0.160	2.45	121	88	80
		0.160	2.45	121	88	80
		0.180	2.75	122	88	80
		0.180	2.75	122	88	82
		0.180	2.75	122	88	82
		0.180	2.76	122	88	84
Stop 120.0	Final: 864.149					
120.0	123.514	0.186	2.84	118	83	78

(12) 8/30/94

000041

INTERNATIONAL TECHNOLOGY CORPORATION

IT AIR QUALITY SERVICES
EMISSION TEST REPORT

validated 8/3/94

FIELD DATA

Plant: FEMP
Sampling location: Vitrification stack
Test time (start-stop): 1215-1422

Date: 8/8/94
Run number: V-PM-2

Sample type: Particulate/metals
Bar. press. (in. Hg): 29.70
Static press. (in. H20): -0.10
Filter number(s): 9470018
Stack dia. or width (in.): 13.00
Pitot tube coeff.: 0.84
Total H2O collected (ml): 25.0
% O2 by volume (dry): 21.0

Volume correction (cu. ft.): 0.000
Meter calibration factor: 0.970
Data interval (min.): 5.0
Nozzle dia. (in.): 0.260
Stack length (if rectangular) (in.): 0.00
Number of traverse points: 24
% CO2 by volume (dry): 0.0
% CO by volume (dry): 0.0

Sample time (min)	Gas meter reading (cu. ft.)	Velocity head ΔP (in. H2O)	Orifice drop actual ΔH (in. H2O)	Stack Temp. (°F)	Dry gas meter temp. (°F) inlet	Dry gas meter temp. (°F) outlet
Start 0.0	Initial: 864.457					
		0.220	0.81	118	92	88
		0.250	0.91	122	92	90
		0.240	0.88	123	92	90
		0.220	0.80	124	92	90
		0.200	0.73	124	94	90
		0.180	0.66	124	94	90
		0.160	0.58	125	94	90
		0.180	0.66	125	94	90
		0.180	0.66	125	94	90
		0.160	0.58	125	94	90
		0.170	0.62	124	94	90
		0.170	0.62	124	94	90
		0.230	0.85	118	94	90
		0.250	0.92	120	94	90
		0.240	0.87	125	94	90
		0.230	0.83	127	94	90
		0.200	0.73	127	94	90
		0.180	0.65	127	94	90
		0.200	0.72	128	94	90
		0.210	0.76	128	94	90
		0.200	0.72	128	94	90
		0.180	0.65	127	94	90
		0.150	0.55	127	94	92
		0.150	0.55	127	94	92
Stop 120.0	Final: 929.395					
120.0	**64.938**	**0.198**	**0.72**	**125**	**94**	**90**

8/30/94

INTERNATIONAL TECHNOLOGY CORPORATION

IT AIR QUALITY SERVICES

validated 8/3/94

EMISSION TEST REPORT

FIELD DATA

Plant: FEMP
Sampling location: Vitrification stack
Test time (start-stop): 1510-1713

Date: 8/8/94
Run number: V-PM-3

Sample type: Particulate/metals
Bar. press. (in. Hg): 29.70
Static press. (in. H20): -0.10
Filter number(s): 9470017
Stack dia. or width (in.): 13.00
Pitot tube coeff.: 0.84
Total H2O collected (ml): 16.0
% O2 by volume (dry): 21.0

Volume correction (cu. ft.): 0.000
Meter calibration factor: 0.970
Data interval (min.): 5.0
Nozzle dia. (in.): 0.275
Stack length (if rectangular) (in.): 0.00
Number of traverse points: 24
% CO2 by volume (dry): 0.0
% CO by volume (dry): 0.0

Sample time (min)	Gas meter reading (cu. ft.)	Velocity head ΔP (in. H2O)	Orifice drop actual ΔH (in. H2O)	Stack Temp. (°F)	Dry gas meter temp. (°F) Inlet	Dry gas meter temp. (°F) outlet
Start 0.0	Initial: 929.681					
		0.250	1.14	124	94	92
		0.260	1.18	127	94	92
		0.260	1.18	128	94	92
		0.240	1.09	129	94	92
		0.220	1.00	129	94	92
		0.210	0.95	129	94	92
		0.180	0.82	129	94	92
		0.210	0.95	130	94	92
		0.210	0.95	129	94	92
		0.200	0.91	129	96	92
		0.180	0.82	128	96	92
		0.180	0.82	128	96	92
		0.250	1.14	127	96	92
		0.260	1.17	131	96	92
		0.220	1.00	128	96	92
		0.200	0.91	129	96	94
		0.190	0.86	129	96	94
		0.180	0.82	129	96	94
		0.180	0.82	129	96	94
		0.220	1.00	129	96	94
		0.220	1.00	129	96	96
		0.220	1.00	129	96	96
		0.220	1.00	129	96	96
		0.230	1.05	129	96	96
Stop 120.0	Final: 1005.953					
120.0	76.272	0.216	0.98	129	95	93

8/30/94

INTERNATIONAL TECHNOLOGY CORPORATION

IT AIR QUALITY SERVICES

validated 8/3/94

EMISSION TEST REPORT

TEST RESULTS

Plant: FEMP

Sampling location: Vitrification stack

		Test date(s):	8/8/94	8/8/94	8/8/94	
			Run Numbers			3-Run
			V-PM-1	V-PM-2	V-PM-3	AVERAGE
Ø	Net time of test (min)		120.0	120.0	120.0	
NP	Number of sampling points		24	24	24	
Y	Meter calibration factor		0.970	0.970	0.970	
Dn	Sampling nozzle diameter (in)		0.373	0.260	0.275	
Cp	Pitot tube coefficient		0.84	0.84	0.84	
ΔH	Average orifice pressure drop (in. H2O)		2.84	0.72	0.98	1.5
Vm	Volume of dry gas sampled at meter conditions (cu. ft.)		123.514	64.938	76.272	88.24
Tm	Average gas meter temperature (°F)		80.3	91.9	94.2	88.8
Vmstd	Volume of dry gas sampled at standard conditions (scf)		117.038	59.928	70.142	82.37
Vlc	Total H2O collected in impingers and silica gel (ml)		53.0	25.0	16.0	31.3
Vwstd	Volume of water vapor at standard conditions (scf)		2.495	1.177	0.753	1.47
Bws	Percent moisture by volume, as measured		2.09	1.93	1.06	1.69
	Percent moisture by volume, at saturation		11.01	13.18	14.65	12.95
	Percent moisture value used in calculations		2.09	1.93	1.06	1.69
Fmd	Mole fraction of dry gas		0.979	0.981	0.989	0.983
%CO2	Percent CO2 by volume (dry)		0.0	0.0	0.0	0.0
%O2	Percent O2 by volume (dry)		21.0	21.0	21.0	21.0
%CO	Percent CO by volume (dry)		0.0	0.0	0.0	0.0
%N2	Percent N2 by volume (dry)		79.0	79.0	79.0	79.0
Md	Molecular weight - dry stack gas		28.84	28.84	28.84	28.84
Ms	Molecular weight - stack gas		28.61	28.63	28.72	28.66
Pbar	Barometric pressure (in. Hg)		29.70	29.70	29.70	29.70
Psl	Static pressure of stack gas (in. H2O)		-0.10	-0.10	-0.10	-0.10
Ps	Stack pressure - absolute (in. Hg)		29.69	29.69	29.69	29.69
Ts	Average stack gas temperature (°F)		118.2	124.7	128.6	123.8
Vh	Average square root of velocity head (in. H2O)		0.4307	0.4435	0.4642	0.4461
Vs	Average stack gas velocity (feet/sec.)		25.51	26.41	27.69	26.54
As	Stack area (sq. in.)		132.7	132.7	132.7	132.7
Qs	Actual stack flow rate (acfm)		1,411	1,461	1,531	1,468
Qsstd	Stack flow rate - dry (scfm)		1,252	1,284	1,349	1,295
ISO	Percent isokinetic		94.6	97.2	96.8	96.2

EMISSION TEST REPORT

TEST RESULTS

Plant: FEMP

Sampling location: Vitrification stack

Test date(s): 8/8/94 8/8/94 8/8/94

				Run Numbers V-PM-1	V-PM-2	V-PM-3	3-Run AVERAGE
		Mass of pollutant	=	15.4	4.3	2.1	
		If below detection limits, replace 0 with 1.		0	0	0	
Mn	Filterable particulate	Mass	mg	15.4	4.3	2.1	
Cs		Concentration	gr/dscf	2.030E-03	1.107E-03	4.620E-04	1.200E-03
Pmr		Emission rate	lb/h	2.179E-02	1.218E-02	5.341E-03	1.310E-02
		Mass of pollutant	=	5.0	5.0	5.0	
		If below detection limits, replace 0 with 1.		1	1	1	
Mn	Arsenic	Mass	µg	<5.0	<5.0	<5.0	
Cs		Concentration	µg/m3	<1.509E+00	<2.946E+00	<2.517E+00	<2.324E+00
Pmr		Emission rate	lb/h	<7.075E-06	<1.417E-05	<1.272E-05	<1.132E-05
		Mass of pollutant	=	3.0	2.5	3.0	
		If below detection limits, replace 0 with 1.		0	0	0	
Mn	Barium	Mass	µg	3.0	2.5	3.0	
Cs		Concentration	µg/m3	9.052E-01	1.473E+00	1.510E+00	1.296E+00
Pmr		Emission rate	lb/h	4.245E-06	7.085E-06	7.631E-06	6.320E-06
		Mass of pollutant	=	0.5	0.5	0.5	
		If below detection limits, replace 0 with 1.		1	1	1	
Mn	Beryllium	Mass	µg	<0.5	<0.5	<0.5	
Cs		Concentration	µg/m3	<1.509E-01	<2.946E-01	<2.517E-01	<2.324E-01
Pmr		Emission rate	lb/h	<7.075E-07	<1.417E-06	<1.272E-06	<1.132E-06
		Mass of pollutant	=	2.5	2.5	2.5	
		If below detection limits, replace 0 with 1.		1	1	1	
Mn	Cadmium	Mass	µg	<2.5	<2.5	<2.5	
Cs		Concentration	µg/m3	<7.543E-01	<1.473E+00	<1.259E+00	<1.162E+00
Pmr		Emission rate	lb/h	<3.538E-06	<7.085E-06	<6.359E-06	<5.661E-06

11/4/94

INTERNATIONAL TECHNOLOGY CORPORATION

IT AIR QUALITY SERVICES

validated 8/3/94

EMISSION TEST REPORT

TEST RESULTS

Plant: FEMP

Sampling location: Vitrification stack

Test date(s): 8/8/94 8/8/94 8/8/94

				Run Numbers V-PM-1	V-PM-2	V-PM-3	3-Run AVERAGE
		Mass of pollutant	=	5.0	5.0	5.0	
		If below detection limits, replace 0 with 1.		1	1	1	
Mn	Chromium	Mass	µg	<5.0	<5.0	<5.0	
Cs		Concentration	µg/m3	<1.509E+00	<2.946E+00	<2.517E+00	<2.324E+00
Pmr		Emission rate	lb/h	<7.075E-06	<1.417E-05	<1.272E-05	<1.132E-05
		Mass of pollutant	=	1.0	1.5	1.5	
		If below detection limits, replace 0 with 1.		0	0	0	
Mn	Lead	Mass	µg	1.0	1.5	1.5	
Cs		Concentration	µg/m3	3.017E-01	8.839E-01	7.552E-01	6.470E-01
Pmr		Emission rate	lb/h	1.415E-06	4.251E-06	3.815E-06	3.160E-06
		Mass of pollutant	=	6.7	8.9	1.4	
		If below detection limits, replace 0 with 1.		0	0	0	
Mn	Mercury	Mass	µg	6.7	8.9	1.4	
Cs		Concentration	µg/m3	2.022E+00	5.245E+00	7.049E-01	2.657E+00
Pmr		Emission rate	lb/h	9.481E-06	2.522E-05	3.561E-06	1.275E-05
		Mass of pollutant	=	10.0	1.0	1.0	
		If below detection limits, replace 0 with 1.		0	1	1	
Mn	Selenium	Mass	µg	10.0	<1.0	<1.0	
Cs		Concentration	µg/m3	3.017E+00	<5.893E-01	<5.035E-01	1.370E+00
Pmr		Emission rate	lb/h	1.415E-05	<2.834E-06	<2.544E-06	6.509E-06
		Mass of pollutant	=	2.5	2.5	2.5	
		If below detection limits, replace 0 with 1.		1	1	1	
Mn	Silver	Mass	µg	<2.5	<2.5	<2.5	
Cs		Concentration	µg/m3	<7.543E-01	<1.473E+00	<1.259E+00	<1.162E+00
Pmr		Emission rate	lb/h	<3.538E-06	<7.085E-06	<6.359E-06	<5.661E-06

11/4/94

INTERNATIONAL TECHNOLOGY CORPORATION

IT AIR QUALITY SERVICES

validated 8/3/94

EMISSION TEST REPORT

FIELD DATA

Plant: FEMP
Sampling location: Vitrification stack
Test time (start-stop): 0933-1036

Date: 8/4/94
Run number: V-R-1

Sample type: Radionuclides
Bar. press. (in. Hg): 29.45
Static press. (in. H20): -0.10
Filter number(s): 9410094
Stack dia. or width (in.): 13.00
Pitot tube coeff.: 0.84
Total H2O collected (ml): 47.6
% O2 by volume (dry): 21.0

Volume correction (cu. ft.): 0.000
Meter calibration factor: 0.970
Data interval (min.): 2.5
Nozzle dia. (in.): 0.314
Stack length (if rectangular) (in.):
Number of traverse points: 24
% CO2 by volume (dry): 0.0
% CO by volume (dry): 0.0

Sample time (min)		Gas meter reading (cu. ft.)	Velocity head ΔP (in. H2O)	Orifice drop actual ΔH (in. H2O)	Stack Temp. (°F)	Dry gas meter temp. (°F) inlet	Dry gas meter temp. (°F) outlet
Start 0.0	Initial:	620.468					
			0.120	1.07	138	90	92
			0.100	0.88	135	92	92
			0.090	0.80	138	92	92
			0.110	0.98	136	92	92
			0.110	0.97	135	92	92
			0.100	0.89	135	92	92
			0.100	0.89	136	92	92
			0.120	1.06	136	92	91
			0.140	1.24	136	92	91
			0.150	1.33	136	92	91
			0.150	1.33	135	92	92
			0.140	1.24	135	92	92
			0.100	0.88	135	92	92
			0.100	0.88	134	92	92
			0.100	0.88	133	92	92
			0.100	0.88	133	92	92
			0.120	1.06	135	92	92
			0.110	0.97	135	92	92
			0.100	0.89	136	92	92
			0.100	0.89	137	92	92
			0.110	0.98	137	92	92
			0.120	1.06	137	92	92
			0.130	1.15	137	92	92
			0.130	1.15	137	92	92
Stop 60.0	Final:	658.380					
60.0		37.912	0.115	1.01	136	92	92

8/30/94

INTERNATIONAL TECHNOLOGY CORPORATION

IT AIR QUALITY SERVICES
EMISSION TEST REPORT
FIELD DATA

validated 8/3/94

Plant: FEMP
Sampling location: Vitrification stack
Test time (start-stop): 1152-1255

Date: 8/4/94
Run number: V-R-2

Sample type: Radionuclides
Bar. press. (in. Hg): 29.45
Static press. (in. H20): -0.10
Filter number(s): 9410093
Stack dia. or width (in.): 13.00
Pitot tube coeff.: 0.84
Total H2O collected (ml): 37.8
% O2 by volume (dry): 21.0

Volume correction (cu. ft.): 0.000
Meter calibration factor: 0.970
Data interval (min.): 2.5
Nozzle dia. (in.): 0.313
Stack length (if rectangular) (in.): 0.00
Number of traverse points: 24
% CO2 by volume (dry): 0.0
% CO by volume (dry): 0.0

Sample time (min)		Gas meter reading (cu. ft.)	Velocity head ΔP (in. H2O)	Orifice drop actual ΔH (in. H2O)	Stack Temp. (°F)	Dry gas meter temp. (°F) inlet	Dry gas meter temp. (°F) outlet
Start 0.0	Initial:	658.802					
			0.100	0.87	134	92	92
			0.110	0.96	134	92	92
			0.110	0.96	133	92	92
			0.120	1.05	134	92	92
			0.120	1.05	134	92	92
			0.100	0.87	135	94	92
			0.120	1.05	136	94	92
			0.130	1.14	136	94	92
			0.160	1.40	137	94	92
			0.170	1.48	136	94	92
			0.160	1.40	136	94	92
			0.160	1.40	136	94	92
			0.110	0.96	134	94	92
			0.120	1.04	133	94	92
			0.120	1.04	133	94	92
			0.140	1.21	133	96	92
			0.140	1.22	135	96	92
			0.150	1.30	136	96	94
			0.130	1.13	137	96	94
			0.120	1.05	137	96	94
			0.120	1.05	138	96	94
			0.130	1.13	138	96	94
			0.150	1.31	137	96	94
			0.160	1.39	137	96	94
Stop 60.0	Final:	699.579					
60.0		**40.777**	**0.131**	**1.14**	**135**	**94**	**93**

DG 8/30/94

EMISSION TEST REPORT

FIELD DATA

Plant: FEMP
Sampling location: Vitrification stack
Test time (start-stop): 1323-1426

Date: 8/4/94
Run number: V-R-3

Sample type: Radionuclides
Bar. press. (in. Hg): 29.45
Static press. (in. H20): -0.10
Filter number(s): 9410069
Stack dia. or width (in.): 13.00
Pitot tube coeff.: 0.84
Total H2O collected (ml): 34.0
% O2 by volume (dry): 21.0

Volume correction (cu. ft.): 0.000
Meter calibration factor: 0.970
Data interval (min.): 2.5
Nozzle dia. (in.): 0.314
Stack length (if rectangular) (in.): 0.00
Number of traverse points: 24
% CO2 by volume (dry): 0.0
% CO by volume (dry): 0.0

Sample time (min)	Gas meter reading (cu. ft.)	Velocity head ΔP (in. H2O)	Orifice drop actual ΔH (in. H2O)	Stack Temp. (°F)	Dry gas meter temp. (°F) inlet	Dry gas meter temp. (°F) outlet
Start 0.0	Initial: 699.816					
		0.100	0.88	133	96	96
		0.100	0.88	137	96	96
		0.100	0.88	137	96	96
		0.100	0.88	137	96	96
		0.110	0.97	138	96	96
		0.110	0.97	138	96	96
		0.130	1.15	138	96	96
		0.150	1.32	138	96	96
		0.160	1.41	138	97	97
		0.160	1.41	138	97	97
		0.160	1.41	137	97	97
		0.150	1.32	136	97	97
		0.120	1.05	134	97	97
		0.120	1.05	137	98	98
		0.130	1.14	137	98	98
		0.140	1.23	137	98	98
		0.140	1.23	138	98	98
		0.110	0.97	138	98	98
		0.110	0.97	138	98	98
		0.110	0.97	139	98	98
		0.130	1.15	139	98	98
		0.130	1.14	138	98	98
		0.150	1.32	139	98	98
		0.150	1.32	139	98	98
Stop 60.0	Final: 740.446					
60.0	40.630	0.128	1.13	137	97	97

8/30/94

INTERNATIONAL TECHNOLOGY CORPORATION

IT AIR QUALITY SERVICES

validated 8/3/94

EMISSION TEST REPORT

TEST RESULTS

Plant: FEMP

Sampling location: Vitrification stack

		Test date(s):	8/4/94	8/4/94	8/4/94	
			Run Numbers			3-Run
			V-R-1	V-R-2	V-R-3	AVERAGE
Ø	Net time of test (min)		60.0	60.0	60.0	
NP	Number of sampling points		24	24	24	
Y	Meter calibration factor		0.970	0.970	0.970	
Dn	Sampling nozzle diameter (in)		0.314	0.313	0.314	
Cp	Pitot tube coefficient		0.84	0.84	0.84	
ΔH	Average orifice pressure drop (in. H2O)		1.01	1.14	1.13	1.1
Vm	Volume of dry gas sampled at meter conditions (cu. ft.)		37.912	40.777	40.630	39.77
Tm	Average gas meter temperature (°F)		91.9	93.5	97.1	94.2
Vmstd	Volume of dry gas sampled at standard conditions (scf)		34.717	37.248	36.867	36.28
Vlc	Total H2O collected in impingers and silica gel (ml)		47.6	37.8	34.0	39.8
Vwstd	Volume of water vapor at standard conditions (scf)		2.241	1.779	1.600	1.87
Bws	Percent moisture by volume, as measured		6.06	4.56	4.16	4.93
	Percent moisture by volume, at saturation		17.84	17.68	18.65	18.06
	Percent moisture value used in calculations		6.06	4.56	4.16	4.93
Fmd	Mole fraction of dry gas		0.939	0.954	0.958	0.951
%CO2	Percent CO2 by volume (dry)		0.0	0.0	0.0	0.0
%O2	Percent O2 by volume (dry)		21.0	21.0	21.0	21.0
%CO	Percent CO by volume (dry)		0.0	0.0	0.0	0.0
%N2	Percent N2 by volume (dry)		79.0	79.0	79.0	79.0
Md	Molecular weight - dry stack gas		28.84	28.84	28.84	28.84
Ms	Molecular weight - stack gas		28.18	28.35	28.39	28.31
Pbar	Barometric pressure (in. Hg)		29.45	29.45	29.45	29.45
Psi	Static pressure of stack gas (in. H2O)		-0.10	-0.10	-0.10	-0.10
Ps	Stack pressure - absolute (in. Hg)		29.44	29.44	29.44	29.44
Ts	Average stack gas temperature (°F)		135.7	135.4	137.4	136.2
Vh	Average square root of velocity head (in. H2O)		0.3376	0.3612	0.3565	0.3518
Vs	Average stack gas velocity (feet/sec.)		20.54	21.91	21.64	21.36
As	Stack area (sq. in.)		132.7	132.7	132.7	132.7
Qs	Actual stack flow rate (acfm)		1,136	1,212	1,197	1,182
Qsstd	Stack flow rate - dry (scfm)		931	1,009	998	979
ISO	Percent isokinetic		106.6	106.1	105.6	106.1

EMISSION TEST REPORT

TEST RESULTS

Plant: FEMP

Sampling location: Vitrification stack

Test date(s): 8/4/94 8/4/94 8/4/94

				Run Numbers V-R-1	V-R-2	V-R-3	3-Run AVERAGE
		Mass of pollutant	=	3.5	3.5	3.5	
		If below detection limits, replace 0 with 1.		1	1	1	
Mn	Total uranium	Mass	µg	<3.5	<3.5	<3.5	
Cs		Concentration	µg/m3	<3.560E+00	<3.318E+00	<3.353E+00	<3.410E+00
Pmr		Emission rate	lb/h	<1.241E-05	<1.254E-05	<1.253E-05	<1.249E-05

11/21/94

Uranium Mass Calculations

	Sample fraction						
	Liquid					Filter	
Run no.	Uranium conc. in fraction, µg/ℓ	Volume,ml Acetone	Volume,ml Water	Volume,ml Total	Total uranium in fraction, µg	Total uranium in fraction, µg	Total uranium in sample, µg
V-R-1	<1.00	200	300	500	<0.50	<3.00	<3.50
V-R-2	<1.00	200	300	500	<0.50	<3.00	<3.50
V-R-3	<1.00	200	300	500	<0.50	<3.00	<3.50

Liquid volume (total)=volume(acetone+water)
Total uranium (liquid fraction)=uranium conc. (liquid fraction)*(total liquid volume/1000)
Total uranium (sample)=total uranium (liquid+filter)

DK
11/22/94

11/21/94 9:01

Activity Concentration

		Sample fraction								
		Liquid					Filter			
Run no.	Activity type	Activity conc. in fraction, pCi/l	Volume,ml Acetone	Volume,ml Water	Volume,ml Total	Total activity in fraction, pCi	Total activity in fraction, pCi	Total activity in sample, pCi	Sample volume, dscf	Activity conc., pCi/dscf
V-R-1	Alpha	<1.75	200	300	500	<0.88	4.51	≤5.39	34.717	≤0.16
	Beta	<2.82	200	300	500	<1.41	1.07	≤2.48		≤0.07
	Gamma	<6.90	200	300	500	<3.45	<11.5	<15.0		<0.43
V-R-2	Alpha	<1.33	200	300	500	<0.67	4.70	≤5.37	37.248	≤0.14
	Beta	<2.93	200	300	500	<1.47	1.73	≤3.20		≤0.09
	Gamma	<8.44	200	300	500	<4.22	<14.7	<18.9		<0.51
V-R-3	Alpha	<1.63	200	300	500	<0.82	4.99	≤5.81	36.867	≤0.16
	Beta	<2.73	200	300	500	<1.37	1.42	≤2.79		≤0.08
	Gamma	<8.04	200	300	500	<4.02	<13.9	<17.9		<0.49
Average	Alpha									≤0.15
	Beta									≤0.08
	Gamma									<0.47

Liquid volume (total)=volume(acetone+water)
Total activity (liquid fraction)=activity conc. (liquid fraction)*(total liquid volume/1000)
Total activity (sample)=total activity (liquid+filter)
Activity conc.=total activity (sample)/sample volume

DH
11/22/94

000053

INTERNATIONAL TECHNOLOGY CORPORATION

IT AIR QUALITY SERVICES
EMISSION TEST REPORT
FIELD DATA

validated 8/3/94

Plant: FEMP
Sampling location: Vitrification stack
Test time (start-stop): 1242-1347

Date: 9/14/94
Run number: V-F-1

Sample type: Total fluorides
Bar. press. (in. Hg): 29.73
Static press. (in. H20): -0.10
Filter number(s): NA
Stack dia. or width (in.): 13.00
Pitot tube coeff.: 0.84
Total H2O collected (ml): 27.6
% O2 by volume (dry): 21.0

Volume correction (cu. ft.): 0.000
Meter calibration factor: 0.951
Data interval (min.): 2.5
Nozzle dia. (in.): 0.312
Stack length (if rectangular) (in.):
Number of traverse points: 24
% CO2 by volume (dry): 0.0
% CO by volume (dry): 0.0

Sample time (min)		Gas meter reading (cu. ft.)	Velocity head ΔP (in. H2O)	Orifice drop actual ΔH (in. H2O)	Stack Temp. (°F)	Dry gas meter temp. (°F) inlet	Dry gas meter temp. (°F) outlet
Start 0.0	Initial:	403.436					
			0.240	1.86	116	84	83
			0.260	2.01	119	84	84
			0.270	2.08	121	84	84
			0.270	2.08	121	84	84
			0.280	2.16	121	84	84
			0.300	2.31	122	85	84
			0.270	2.08	122	86	84
			0.280	2.16	122	87	85
			0.310	2.39	123	88	85
			0.330	2.55	123	89	85
			0.350	2.70	123	90	86
			0.350	2.71	123	92	86
			0.170	1.32	123	94	88
			0.150	1.16	124	94	88
			0.140	1.09	125	94	89
			0.150	1.16	127	94	89
			0.150	1.16	127	94	89
			0.160	1.24	128	95	90
			0.150	1.16	129	96	90
			0.150	1.16	129	96	90
			0.170	1.31	130	96	90
			0.190	1.46	131	97	91
			0.200	1.54	131	98	92
			0.200	1.54	131	98	92
Stop 60.0	Final:	453.600					
60.0		50.164	0.229	1.77	125	91	87

10/26/94

EMISSION TEST REPORT

FIELD DATA

Plant: FEMP
Sampling location: Vitrification stack
Test time (start-stop): 1420-1525

Date: 9/14/94
Run number: V-F-2

Sample type: Total fluorides
Bar. press. (in. Hg): 29.73
Static press. (in. H20): -0.10
Filter number(s): NA
Stack dia. or width (in.): 13.00
Pitot tube coeff.: 0.84
Total H2O collected (ml): 41.8
% O2 by volume (dry): 21.0

Volume correction (cu. ft.): 0.000
Meter calibration factor: 0.951
Data interval (min.): 2.5
Nozzle dia. (in.): 0.312
Stack length (if rectangular) (in.): 0.00
Number of traverse points: 24
% CO2 by volume (dry): 0.0
% CO by volume (dry): 0.0

Sample time (min)	Gas meter reading (cu. ft.)	Velocity head ΔP (in. H2O)	Orifice drop actual ΔH (in. H2O)	Stack Temp. (°F)	Dry gas meter temp. (°F) inlet	Dry gas meter temp. (°F) outlet
Start 0.0 Initial:	453.934					
		0.140	1.08	132	95	95
		0.130	1.00	132	95	95
		0.130	1.00	134	95	95
		0.140	1.08	134	95	95
		0.140	1.08	134	95	95
		0.130	1.00	135	95	95
		0.150	1.15	135	97	95
		0.180	1.38	135	97	95
		0.200	1.54	135	98	95
		0.200	1.54	134	99	95
		0.200	1.54	134	100	95
		0.210	1.62	134	100	95
		0.150	1.16	134	102	96
		0.130	1.01	134	102	96
		0.120	0.93	134	102	96
		0.140	1.08	135	102	97
		0.140	1.08	136	103	97
		0.160	1.24	136	103	97
		0.190	1.47	135	103	97
		0.200	1.55	135	104	98
		0.200	1.55	135	104	98
		0.200	1.55	134	105	98
		0.210	1.64	133	105	99
		0.210	1.63	135	106	99
Stop 60.0 Final:	497.634					
60.0	43.700	0.167	1.29	134	100	96

AKG 10/26/94

INTERNATIONAL TECHNOLOGY CORPORATION

validated 8/3/94

IT AIR QUALITY SERVICES
EMISSION TEST REPORT
FIELD DATA

Plant: FEMP
Sampling location: Vitrification stack
Test time (start-stop): 1615-1720

Date: 9/14/94
Run number: V-F-3

Sample type: Total fluorides
Bar. press. (in. Hg): 29.73
Static press. (in. H20): -0.10
Filter number(s): NA
Stack dia. or width (in.): 13.00
Pitot tube coeff.: 0.84
Total H2O collected (ml): 36.0
% O2 by volume (dry): 21.0

Volume correction (cu. ft.): 0.000
Meter calibration factor: 0.951
Data interval (min.): 2.5
Nozzle dia. (in.): 0.312
Stack length (if rectangular) (in.): 0.00
Number of traverse points: 24
% CO2 by volume (dry): 0.0
% CO by volume (dry): 0.0

Sample time (min)	Gas meter reading (cu. ft.)	Velocity head ΔP (in. H2O)	Orifice drop actual ΔH (in. H2O)	Stack Temp. (°F)	Dry gas meter temp. (°F) inlet	Dry gas meter temp. (°F) outlet
Start 0.0	Initial: 503.627					
		0.120	0.93	133	100	99
		0.120	0.93	135	99	98
		0.130	1.00	136	99	99
		0.130	1.00	136	99	99
		0.140	1.08	136	99	99
		0.150	1.16	136	99	99
		0.160	1.23	136	99	99
		0.160	1.23	137	99	99
		0.190	1.47	136	100	99
		0.200	1.55	136	102	99
		0.220	1.71	134	103	100
		0.200	1.55	136	104	100
		0.130	1.01	134	105	100
		0.140	1.09	134	105	100
		0.140	1.09	135	105	100
		0.130	1.01	135	105	100
		0.130	1.01	136	106	100
		0.120	0.93	136	106	100
		0.140	1.09	136	106	100
		0.150	1.16	136	106	101
		0.170	1.32	136	107	101
		0.170	1.32	136	107	101
		0.180	1.40	135	107	101
		0.180	1.40	136	107	101
Stop 60.0	Final: 545.814					
60.0	**42.187**	**0.154**	**1.19**	**136**	**103**	**100**

10/26/94

EMISSION TEST REPORT

TEST RESULTS

Plant: FEMP

Sampling location: Vitrification stack

Test date(s): 9/14/94 9/14/94 9/14/94

		Run Numbers V-F-1	V-F-2	V-F-3	3-Run AVERAGE
Ø	Net time of test (min)	60.0	60.0	60.0	
NP	Number of sampling points	24	24	24	
Y	Meter calibration factor	0.951	0.951	0.951	
Dn	Sampling nozzle diameter (in)	0.312	0.312	0.312	
Cp	Pitot tube coefficient	0.84	0.84	0.84	
ΔH	Average orifice pressure drop (in. H2O)	1.77	1.29	1.19	1.4
Vm	Volume of dry gas sampled at meter conditions (cu. ft.)	50.164	43.700	42.187	45.35
Tm	Average gas meter temperature (°F)	89.1	98.1	101.4	96.2
Vmstd	Volume of dry gas sampled at standard conditions (scf)	45.784	39.190	37.603	40.86
Vlc	Total H2O collected in impingers and silica gel (ml)	27.6	41.8	36.0	35.1
Vwstd	Volume of water vapor at standard conditions (scf)	1.299	1.968	1.695	1.65
Bws	Percent moisture by volume, as measured	2.76	4.78	4.31	3.95
	Percent moisture by volume, at saturation	13.15	17.05	17.57	15.92
	Percent moisture value used in calculations	2.76	4.78	4.31	3.95
Fmd	Mole fraction of dry gas	0.972	0.952	0.957	0.960
%CO2	Percent CO2 by volume (dry)	0.0	0.0	0.0	0.0
%O2	Percent O2 by volume (dry)	21.0	21.0	21.0	21.0
%CO	Percent CO by volume (dry)	0.0	0.0	0.0	0.0
%N2	Percent N2 by volume (dry)	79.0	79.0	79.0	79.0
Md	Molecular weight - dry stack gas	28.84	28.84	28.84	28.84
Ms	Molecular weight - stack gas	28.54	28.32	28.37	28.41
Pbar	Barometric pressure (in. Hg)	29.73	29.73	29.73	29.73
Psl	Static pressure of stack gas (in. H2O)	-0.10	-0.10	-0.10	-0.10
Ps	Stack pressure - absolute (in. Hg)	29.72	29.72	29.72	29.72
Ts	Average stack gas temperature (°F)	124.6	134.3	135.5	131.5
Vh	Average square root of velocity head (in. H2O)	0.4727	0.4063	0.3911	0.4234
Vs	Average stack gas velocity (feet/sec.)	28.18	24.52	23.60	25.43
As	Stack area (sq. in.)	132.7	132.7	132.7	132.7
Qs	Actual stack flow rate (acfm)	1,558	1,356	1,305	1,407
Qsstd	Stack flow rate - dry (scfm)	1,360	1,140	1,100	1,200
ISO	Percent isokinetic	97.4	99.5	98.9	98.6

INTERNATIONAL TECHNOLOGY CORPORATION

validated 8/3/94

IT AIR QUALITY SERVICES
EMISSION TEST REPORT
TEST RESULTS

Plant: FEMP Test date(s): 9/14/94 9/14/94 9/14/94

Sampling location: Vitrification stack

				Run Numbers V-F-1	V-F-2	V-F-3	3-Run AVERAGE
		Mass of pollutant	=	6.3	7.5	6.8	
		If below detection limits, replace 0 with 1.		0	0	0	
Mn	Total fluorides	Mass	mg	6.3	7.5	6.8	
PPMv	MW= 19.00	Concentration	PPMv	6.148E+00	8.551E+00	8.080E+00	7.593E+00
Cs		Concentration	gr/dscf	2.123E-03	2.953E-03	2.790E-03	2.622E-03
Pmr		Emission rate	lb/h	2.474E-02	2.884E-02	2.631E-02	2.663E-02

11/4/94

HCl Emissions

Validated 4/1/91

Plant: FEMP **Date:** 9/14/94
Site: Vitrification stack

Run No.	Vm cu-ft	Y	Pbar in. Hg	ΔH in. H2O	Tm °F	Vmstd scf	H20 Collected ml	H2O %	Qsstd dscfm
V-C-1	47.592	0.975	29.73	1.81	92	44.300		0.00	1360
V-C-2	46.676	0.975	29.73	1.81	99	42.903	44.0	4.61	1140
V-C-3	48.61	0.975	29.73	1.81	101	44.522	47.8	4.81	1100
							Average	~~3.14~~ 4.71	1200

			Run No. V-C-1	V-C-2	V-C-3	Average
	mass of pollutant =		2.50	2.40	2.80	
if below detection limits, replace 0 with 1.			1	1	1	
HCl	mass	mg	<2.5	<2.4	<2.8	
HCl	concentration	gr/dscf	<8.71E-04	<8.63E-04	<9.70E-04	9.014E-04
HCl	emission rate	lb/hr	<1.02E-02	<8.43E-03	<9.15E-03	9.245E-03
	MW= 36.47	ppm	<1.31E+00	<1.30E+00	<1.46E+00	1.360E+00

11/4/94

11/4/94 14:59

Sulfur Dioxide Emissions

Validated 4/1/91

Plant: FEMP **Date:** 8/8/94
Site: Vitrification stack

Run No.	Vm cu-ft	Y	Pbar in. Hg	ΔH in. H2O	Tm °F	Vmstd scf	H20 Collected ml	H2O %	Qsstd dscfm
V-S-1A	15.993	0.946	29.70	1.34	74	14.899		0.00	1252
V-S-1B	15.612	0.946	29.70	1.34	80	14.382		0.00	1252
V-S-2A	15.757	0.946	29.70	1.34	84	14.409		0.00	1252
							Average	0.00	1252

			Run No. V-S-1A	V-S-1B	V-S-2A	Average
	mass of pollutant =		14.00	15.00	20.00	
if below detection limits, replace 0 with 1.						
SO2	mass	µg	14.00	15.00	20.00	
SO2	concentration	µg/m3	3.318E+01	3.683E+01	4.902E+01	3.968E+01
SO2	emission rate	lb/hr	1.556E-04	1.727E-04	2.298E-04	1.860E-04
	MW= 64.07	ppm	1.245E-02	1.382E-02	1.839E-02	1.489E-02

MDL = 1.3 ppm → 0.016 lb/h

JRG

JNG 10/26/94

10/25/94 10:16

Sulfur Dioxide Emissions

Validated 4/1/91

Plant: FEMP **Date:** 8/8/94
Site: Vitrification stack

Run No.	Vm cu-ft	Y	Pbar in. Hg	ΔH in. H2O	Tm °F	Vmstd scf	H20 Collected ml	H2O %	Qsstd dscfm
V-S-2B	15.891	0.946	29.70	1.34	90	14.373		0.00	1252
V-S-3A	15.989	0.946	29.70	1.34	90	14.462		0.00	1284
V-S-3B	15.93	0.946	29.70	1.34	94	14.304		0.00	1284
							Average	**0.00**	**1273**

			Run No.			Average
			V-S-2B	V-S-3A	V-S-3B	
	mass of pollutant =		16.00	20.00	24.00	
if below detection limits, replace 0 with 1.						
SO2	**mass**	µg	16.00	20.00	24.00	
SO2	**concentration**	µg/m3	3.931E+01	4.884E+01	5.925E+01	4.913E+01
SO2	**emission rate**	lb/hr	1.843E-04	2.349E-04	2.849E-04	2.347E-04
	MW= 64.07	ppm	1.475E-02	1.833E-02	2.223E-02	1.844E-02

MDL = 1.3 ppm → 0.017 ppm

10/24/94

10/25/94 10:21

validated 2/16/90

NOx Emissions Calculations

PLANT : FEMP
LOCATION : Vitrification stack
DATE : 8/4/94

	Final	Initial
Barometric Pressure(in. Hg):	29.50	29.45

Run No.	Test Time (24-hr)	Flask Volume ml	Final Pressure in. Hg.	Final Temp. °F	Initial Pressure in. Hg	Initial Temp. °F	Sample Volume ml	PNOx µg	CPPM ppm	Qsstd dscfm	NOx Emissions lb/dscf	NOx Emissions lb/h
V-N-1A	0943	1951.6	3.0	67	26.90	88	1551.4	< 25	< 8	931	< 1.01E-06	< .1
V-N-1B	0958	2009.5	4.0	67	26.60	88	1512.4	< 25	< 9	931	< 1.03E-06	< .1
V-N-1C	1015	2018.5	6.0	67	26.60	88	1385.8	< 25	< 9	931	< 1.13E-06	< .1
V-N-1D	1030	2058.9	5.0	67	26.60	88	1481.9	< 25	< 9	931	< 1.05E-06	< .1
Average									< 9		< 1.05E-06	< .1
V-N-2A	1202	2038.0	6.0	67	27.00	93	1426.7	< 25	< 9	1009	< 1.09E-06	< .1
V-N-2B	1217	1979.3	6.0	67	26.80	93	1372.6	< 25	< 10	1009	< 1.14E-06	< .1
V-N-2C	1232	2078.5	0.4	67	26.40	93	1801.1	< 25	< 7	1009	< 8.67E-07	< .1
V-N-2D	1247	2094.8	6.0	67	27.00	93	1466.9	< 25	< 9	1009	< 1.06E-06	< .1
Average									< 9		< 1.04E-06	< .1
V-N-3A	1335	2073.3	1.0	67	26.20	92	1742.0	< 25	< 7	998	< 8.96E-07	< .1
V-N-3B	1350	2071.6	3.0	67	26.20	92	1603.5	< 25	< 8	998	< 9.73E-07	< .1
V-N-3C	1405	2027.4	3.0	67	26.00	92	1556.0	< 25	< 8	998	< 1.00E-06	< .1
V-N-3D	1420	2012.8	2.0	67	26.60	92	1649.4	< 25	< 8	998	< 9.46E-07	< .1
Average									< 8		< 9.55E-07	< .1
Overall Average									< 9		< 1.02E-06	< .1

DRG 10/26/94

000062

6543

APPENDIX B

FIELD DATA

	Page
Equipment Audits	B-2
Sampling Location and Measurements	B-10
Particulate/Metals	B-12
Radionuclides	B-19
Total Fluorides	B-25
HCl	B-31
SO_2	B-37
NO_x	B-49
CO and THC	B-50

FIELD AUDIT REPORT: DRY GAS METER
BY CRITICAL ORIFICE

DATE: 8-3-94 CLIENT: Formco

BAROMETRIC PRESSURE (P_{bar}): 29.42 in.Hg METER BOX NO. FT-5

ORIFICE NO. #12 PRETEST Y: .946 ΔH@ 1.34 in.H_2O

ORIFICE K FACTOR: 4.699×10^{-4} AUDITOR: GT

Orifice manometer reading ΔH, in.H_2O	Dry gas meter reading V_i/V_f, ft^3	Temperatures: Ambient T_{ai}/T_{af}, °F	Ambient Average T_a, °F	Dry gas meter Inlet T_{ii}/T_{if}, °F	Dry gas meter Outlet T_{oi}/T_{of}, °F	Dry gas meter Average T_m, °F	Duration of run Ø min.
1.4	676.500	90	90	100	96	98.75	21 09/60
	694.000	90		101	98		

Dry gas meter V_m, ft^3	$V_{m_{std}}$, ft^3	$V_{m_{act}}$, ft^3	Audit, Y	Y deviation, ~~%~~	Audit ΔH@, in.H_2O	ΔH@ Deviation, in.H_2O
17.5	16.317	15.00	.919	.027 ~~-2.8~~	1.45	.11

$$V_{m_{std}} = \frac{17.647(V_m)(P_{bar} + \Delta H/13.6)}{(T_m + 460)} = 16.317 \ ft^3$$

(17.647(17.5)(29.42 + 1.4/13.6) / (98.75 + 460))

$$V_{m_{act}} = \frac{1203(\text{Ø})(K)(P_{bar})}{(T_a + 460)^{1/2}} = 15.00 \ ft^3$$

(1203(21.15)(4.699 × 10⁻⁴)(29.42) / (23.45 + 460)^1/2)

$$\text{Audit Y} = \frac{V_{m_{act}}}{V_{m_{std}}} = 0.919 \qquad \text{Y deviation} = \frac{\text{Audit Y} - \text{Pretest Y}}{\text{Pretest Y}} \times 100 = -2.8$$

$$\text{Audit } \Delta H@ = (0.0317)(\Delta H)(P_{bar})(T_m + 460)\left[\frac{\text{Ø}}{Y\,(V_m)(P_{bar} + \Delta H/13.6)}\right]^2 = 1.45 \ \text{in.}H_2O$$

(ΔH = 1.4, Ø = 21.15)

Audit Y must be in the range, pretest Y ±0.05 Y.
Audit ΔH@ must be in the range pretest ΔH@ ±0.15 inches H_2O.

INTERNATIONAI TECHNOLOGY CORPORATIO

DIGITAL INDICATOR AUDIT DATA SHEET

Indicator No. FT-5
Client Fcmco
Date 8-3-94

Project No. 337331
Operator G Thrcis

Test Point No.	Equivalent Temperature F	Digital Indicator Temperature F	% Difference
1	100	100	.00
2	200	201	.15
3	300	301	.13
4	400	400	.00

Percent Difference Must Be Less Than or Equal To 0.5%

Percent Difference:

$$-\frac{(\text{Equivalent Temperature} - \text{Digital Indicator Temperature})(100)}{(\text{Equivalent Temperature} + 460)}$$

FIELD AUDIT REPORT: DRY GAS METER
BY CRITICAL ORIFICE

DATE: 8-3-94 CLIENT: Fermco

BAROMETRIC PRESSURE (P_{bar}): 29.42 in.Hg METER BOX NO. FT-8

ORIFICE NO. # 8 PRETEST Y: .970 ΔH@ 1.53 in.H_2O

ORIFICE K FACTOR: 4.658×10^{-4} AUDITOR: GT

Orifice manometer reading ΔH, in.H_2O	Dry gas meter reading V_i/V_f, ft³	Temperatures: Ambient T_{ai}/T_{af}, °F	Ambient Average T_a, °F	Dry gas meter Inlet T_{ii}/T_{if}, °F	Dry gas meter Outlet T_{oi}/T_{of}, °F	Dry gas meter Average T_m, °F	Duration of run Ø min.
1.5	609.000	90	90	92	94	93.5	14 0835/60
	620.000	90		94	94		

Dry gas meter V_m, ft³	$V_{m_{std}}$, ft³	$V_{m_{act}}$, ft³	Audit, Y	Y deviation ~~%~~	Audit ΔH@, in.H_2O	ΔH@ Deviation, in.H_2O
11.000	10.356	9.941	.960	~~1.0~~ .010	1.59	.06

$$V_{m_{std}} = \frac{17.647(\overset{11}{V_m})(\overset{29.53}{P_{bar}} + \Delta H/13.6)}{(\underset{553.5}{T_m} + 460)} = 10.356 \text{ ft}^3$$

$$V_{m_{act}} = \frac{1203(\overset{14.14}{\emptyset})(K)(P_{bar})}{(\underset{23.45}{T_a} + 460)^{1/2}} = 9.941 \text{ ft}^3$$

$$\text{Audit } Y = \frac{V_{m_{act}}}{V_{m_{std}}} = 0.960 \qquad Y \text{ deviation} = \frac{\text{Audit } Y - \text{Pretest } Y}{\text{Pretest } Y} \times 100 = 1.0$$

$$\text{Audit } \Delta H@ = (0.0317)(\Delta H)(P_{bar})(T_m + 460)\left[\frac{\overset{14.14}{\emptyset}}{Y\,(V_m)(P_{bar} + \Delta H/13.6)}\right]^2 = 1.59 \text{ in.}H_2O$$

Audit Y must be in the range, pretest Y ±0.05 Y.
Audit ΔH@ must be in the range pretest ΔH@ ±0.15 inches H_2O.

INTERNATIONAL TECHNOLOGY CORPORATION

DIGITAL INDICATOR AUDIT DATA SHEET

Indicator No. FT-8
Client Fermco
Date

Project No. 35-331
Operator GT

Test Point No.	Equivalent Temperature F	Digital Indicator Temperature F	% Difference
1	0	1	.22
2	100	100	.00
3	200	201	.15
4	300	302	.26

Percent Difference Must Be Less Than or Equal To 0.5%

Percent Difference:

$$-\frac{(\text{Equivalent Temperature} - \text{Digital Indicator Temperature})(100)}{(\text{Equivalent Temperature} + 460)}$$

FIELD AUDIT REPORT: DRY GAS METER
BY CRITICAL ORIFICE

DATE: 9-13-94 CLIENT: Fermco

BAROMETRIC PRESSURE (P_{bar}): 29.80 in.Hg METER BOX NO. FT-69

ORIFICE NO. #3 PRETEST Y: .951 ΔH@ 1.60 in.H_2O

ORIFICE K FACTOR: 5.450×10^{-4} AUDITOR: G Thress

Orifice manometer reading ΔH, in.H_2O	Dry gas meter reading V_i/V_f, ft³	Temperatures: Ambient T_{ai}/T_{af}, °F	Ambient Average T_a, °F	Dry gas meter Inlet T_{ii}/T_{if}, °F	Dry gas meter Outlet T_{oi}/T_{of}, °F	Dry gas meter Average T_m, °F	Duration of run Ø min.
2.1	385.200	78	78	80	74	78.25	19 3425/60
	403.00	78		82	77		

Dry gas meter V_m, ft³	$V_{m_{std}}$, ft³	$V_{m_{act}}$, ft³	Audit, Y	Y deviation, %	Audit ΔH@, in.H_2O	ΔH@ Deviation, in.H_2O
17.8	17.478	16.488	.943	~~-.8~~ 0.008	1.62	~~1.25~~ 0.02

$$V_{m_{std}} = \frac{17.647(V_m)(P_{bar} + \Delta H/13.6)}{(T_m + 460)} = 17.478 \text{ ft}^3$$

29.95 538.25

$$V_{m_{act}} = \frac{1203(\text{Ø})(K)(P_{bar})}{(T_a + 460)^{1/2}} = 16.488 \text{ ft}^3$$

19.57 23.19

$$\text{Audit Y} = \frac{V_{m_{act}}}{V_{m_{std}}} = .943 \qquad \text{Y deviation} = \frac{\text{Audit Y} - \text{Pretest Y}}{\text{Pretest Y}} \times 100 = -.8$$

$$\text{Audit } \Delta H@ = (0.0317)(\Delta H)(P_{bar})(T_m + 460)\left[\frac{\text{Ø}}{Y\,(V_m)(P_{bar} + \Delta H/13.6)}\right]^2 = 1.62 \text{ in.}H_2O$$

19.57

Audit Y must be in the range, pretest Y ±0.05 Y.
Audit ΔH@ must be in the range pretest ΔH@ ±0.15 inches H_2O.

INTERNATIONAL TECHNOLOGY CORPORATION

DIGITAL INDICATOR AUDIT DATA SHEET

Indicator No. FT-9
Client Fernald
Date 9-13-94

Project No. 332331
Operator Cot

Test Point No.	Equivalent Temperature F	Digital Indicator Temperature F	% Difference
1	0	0	0
2	100	101	.19
3	200	201	.15
4	300	300	0

Percent Difference Must Be Less Than or Equal To 0.5%

Percent Difference:

$$\frac{-(\text{Equivalent Temperature} - \text{Digital Indicator Temperature})(100)}{(\text{Equivalent Temperature} + 460)}$$

FIELD AUDIT REPORT: DRY GAS METER
BY CRITICAL ORIFICE

DATE: 9/13/84 CLIENT: Fermco

BAROMETRIC PRESSURE (P_{bar}): 29.50 in.Hg METER BOX NO. FT-11

ORIFICE NO. # 10 PRETEST Y: 975 ΔH@ 1.81 in.H_2O

ORIFICE K FACTOR: # 4.697 x10^{-4} AUDITOR: G Thress

Orifice manometer reading ΔH, in.H_2O	Dry gas meter reading V_i/V_f, ft³	Temperatures: Ambient T_{ai}/T_{af}, °F	Ambient Average T_a, °F	Dry gas meter Inlet T_{ii}/T_{if}, °F	Dry gas meter Outlet T_{oi}/T_{of}, °F	Dry gas meter Average T_m, °F	Duration of run Ø min.
~~1.8~~ 1.7	340.800	78	78	79	75	78.25	144.362/60
	352.000	78		82	77		

Dry gas meter V_m, ft³	$V_{m_{std}}$, ft³	$V_{m_{act}}$, ft³	Audit, Y	Y deviation, %	Audit ΔH@, in.H_2O	ΔH@ Deviation, in.H_2O
11.1	10.85	10.69	.982	~~.72~~ .007	1.76	~~-2.76~~ .05

$$V_{m_{std}} = \frac{17.647(V_m)(P_{bar} + \Delta H/13.6)}{(T_m + 460)} = 10.89 \text{ ft}^3$$

(29.925; 538.25)

$$V_{m_{act}} = \frac{1203(\text{Ø})(K)(P_{bar})^{1/2}}{(T_a + 460)} = 10.69 \text{ ft}^3$$

(14.73; 29.50; 23.1948)

$$\text{Audit Y} = \frac{V_{m_{act}}}{V_{m_{std}}} = .982 \qquad \text{Y deviation} = \frac{\text{Audit Y} - \text{Pretest Y}}{\text{Pretest Y}} \times 100 =$$

$$\text{Audit } \Delta H@ = (0.0317)(\Delta H)(P_{bar})(T_m + 460)\left[\frac{\text{Ø}}{Y\,(V_m)(P_{bar} + \Delta H/13.6)}\right]^2 = 1.76 \text{ in.}H_2O$$

(14.73; 29.925)

Audit Y must be in the range, pretest Y ±0.05 Y.
Audit ΔH@ must be in the range pretest ΔH@ ±0.15 inches H_2O.

INTERNATIONAL TECHNOLOGY CORPORATION

DIGITAL INDICATOR AUDIT DATA SHEET

Indicator No. FT-11
Client Fernald
Date 9/13/94

Project No. 332331
Operator 67

Test Point No.	Equivalent Temperature F	Digital Indicator Temperature F	% Difference
1	0	0	0
2	100	99	.18
3	200	200	0
4	300	299	.13

Percent Difference Must Be Less Than or Equal To 0.5%

Percent Difference:

$$-\frac{(\text{Equivalent Temperature} - \text{Digital Indicator Temperature})(100)}{(\text{Equivalent Temperature} + 460)}$$

TRAVERSE POINT LOCATION FOR CIRCULAR DUCTS

Plant Fermco

Date 8/3/94

Sampling location Plant 9 Melter vent

Inside of far wall to outside of nipple 14 3/4

Inside of near wall to outside of nipple (nipple length):

1 3/4

Stack inside diameter, inches 13

Distance downstream from flow disturbance (Distance B):

65 inches / diameter = 5.0 dd

Distance upstream from flow disturbance (Distance A):

25 ~~65~~ inches / diameter = 1.9 dd

Calculated by B Gaels

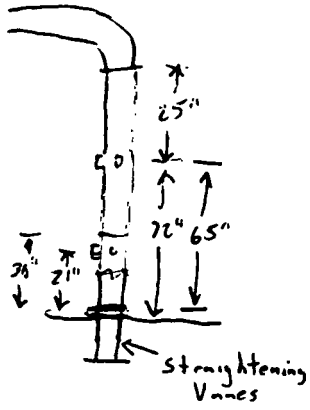

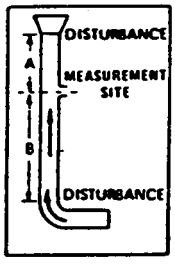

SCHEMATIC OF SAMPLING LOCATION

TRAVERSE POINT NUMBER	FRACTION OF STACK I.D.	STACK I.D.	PRODUCT OF COLUMNS 2 AND 3 (TO NEAREST 1/8 INCH)*	NIPPLE LENGTH	TRAVERSE POINT LOCATION FROM OUTSIDE OF NIPPLE (SUM OF COLUMNS 4 & 5)
1	0.021	13	0.273	1 3/4	2.023 → 2 1/4
2	0.067	↓	0.871	↓	2 5/8
3	0.118	↓	1.534	↓	3 1/4
4	0.177	↓	2.301	↓	4
5	0.250	↓	3.25	↓	5
6	0.356	↓	4.628	↓	6 3/8
7	0.644	↓	8.372	↓	10 1/8
8	0.750	↓	9.75	↓	11 1/2
9	0.823	↓	10.699	↓	12 1/2
10	0.882	↓	11.466	↓	13 1/4
11	0.933	↓	12.129	↓	13 7/8
12	0.979	↓	12.727	↓	14.727 → 14 1/4

*The first and last points must be no closer than 1 in. from the stack wall for stack diameters > 24 in. or no closer than 0.5 in. from the stack wall for stack diameters ≤ 24 in.

000072

GAS VELOCITY AND VOLUMETRIC FLOW RATE

Plant and City: Formco — Date: 8-3-94

Sampling Location: Vitrification outlet Bldg — Clock Time: 1600

Run No.: V-1-C — Operator: GT BG

Barometric Pressure, in.Hg: 29.42 — Static Pressure, in.H_2O: -.1

Moisture, %: ~5 — Molecular wt., Dry: _____ — Pitot Tube, Cp: .84

Stack Dimension, in. Diameter or Side 1: 13" — Side 2: _____

FIELD DATA

TRAVERSE POINT NUMBER	VELOCITY HEAD (ΔP_s), in.H_2O	STACK TEMP., °F
A 1	.23	122
2	.22	124
3	.20	126
4	.17	127
5	.15	129
6	.15	130
7	.17	130
8	.18	131
9	.22	131
10	.25	131
11	.28	131
12	.25	131
B 1	.22	128
2	.21	130
3	.20	130
4	.17	130
5	.17	130
6	.15	131
7	.18	131
8	.20	131
9	.25	131
10	.26	131
11	.24	131
12	.24	131

Cycl.

CALCULATIONS

$M_s = Md \times (1 - \frac{H_2O}{100}) + 18 (\frac{H_2O}{100})$

$M_s = (\quad) \times (1 - \frac{\quad}{100}) + 18 (\frac{\quad}{100})$

$M_s =$

$T_s =$ °F = °R = (°F + 460)

$P_s = P_b + \frac{S.P.}{13.6} = (\quad) + \frac{\quad}{13.6}$

$P_s =$ in.Hg

$\sqrt{\Delta P} =$

$V_s = 85.49 \times Cp \times \sqrt{\Delta P} \times \sqrt{\frac{T_s, °F}{P_s \times M_s}}$

$V_s = 85.49 \times (\quad) \times (\quad) \times \sqrt{\frac{\quad}{x}}$

$V_s =$ ft/s

$A_s =$ ft²

$Q_s = V_s \times A_s \times \frac{60\ s}{m}$

$Q_s = \quad \times \quad \times 60$

$Q_s =$ acfm

$Q_{s_{std}} = Q_s \times 17.647 \times \frac{P_s}{T_s} \times (1 - \frac{H_2O}{100})$

$Q_{s_{std}} = \quad \times 17.647 \times \frac{\quad}{\quad} \times (1 - \frac{\quad}{100})$

$Q_{s_{std}} =$ dscfm

INTERNATIONAL TECHNOLOGY CORPORATION

PARTICULATE/METALS TRAIN
SAMPLE RECOVERY AND INTEGRITY SHEET

Plant: Ferrmco
Sample location: -
Run number: Field Blank
Filter number(s): 9470031

Sample date: 8/9/94
Recovery date: 8/9/94
Recovered by: [illegible]

MOISTURE

Impingers	Condensate	1st	2nd	3rd	4th	5th
Contents	Empty	5%HNO_3/10%H_2O_2		$KMnO_4$		Silica gel
Final wt/vol	100 g	100 g	0 g	100 g	100 g	200 g
Initial wt/vol	100 g	100 g	0 g	100 g	100 g	200 g
Net Gain	0 g	0 g	0 g	0 g	0 g	0 g

Description of impinger water: _____

Total moisture _____ g

RECOVERED SAMPLE

Filter container number(s): 0458B
Sealed: ✓
Description of particulate on filter: -

	Sample solution/rinse container numbers	Sealed/liquid level marked
Acetone probe rinse	0454A	✓
5%HNO_3/10%H_2O_2 solution and 0.1N HNO_3 rinse	0459A	✓
$KMnO_4$ solution and rinse	0458A	✓
8N HCl rinse	0456A	✓

Samples stored and locked: _____
Remarks: _____

2/27/92

000074

INTERNATIONAL TECHNOLOGY CORPORATION

Emission Testing Field Data

Plant and City	Date	Sampling Location	Sample Type	Run Number
Fernald	8/18/94	Vitrification outlet	Part. / metals	V-PM-1

Operator(s)	Bar. Press. (in. Hg)	Static Press. (in. H_2O)	Amb. Temp. (°F)	Filter Number(s)	Probe Length and Type	Nozzle Dia. (in.)	Nozzle Number
CT, BG	29.70	-.1	72	911009	4' Glass	.373	6101

Moisture (%)	Meter Box No.	Meter ΔH@	Meter Cal. Factor (Y)	K Factor	Probe Heat (°F)	Box Heat (°F)	Therm. No.	Pitot No.	Imp. Therm. No.	Gas Bag Pump No.	Gas Bag Sys. Leak Check	Train Leak Check (initial) in. Hg	Train Leak Check (initial) CFM	Train Leak Check (final) in. Hg	Train Leak Check (final) CFM	Pitot Leak Check initial	Pitot Leak Check final
25.	FT8	1.53	.670	16.34	250	250	415	002	F-91	30	✓	15.	.001	15.	.001	✓	✓

Traverse Point No.	Sampling Time (min.)	Clock Time (24-hr)	Gas Meter Reading (Vm), ft^3	Velocity Head* (ΔP), in. H_2O	Orifice Pressure Differential (ΔH), in. H_2O* Desired	Orifice Pressure Differential (ΔH), in. H_2O* Actual	Temperature (°F) Stack (T_s)	Dry Gas Meter Inlet (T_{mi})	Dry Gas Meter Outlet (T_{mo})	Probe	Sample Box	Resin	Impinger	Pump Vac. (in. Hg)	Gas Bag Sample Data
	0	10.00	740.635												
1	5.		751.30	.21	3.19	3.19	112	72	72	250	251	NA	60.	8	—
2	10		756.7	.20	3.03	3.03	115	74	74	251	261		62	10	—
3	15		760.1	.22	3.34	3.34	116	76	74	249	255		62	10	✓
4	20		762.2	.20	3.04	3.04	116	76	74	252	260		65	10	✓
5	25		767.3	.20	3.04	3.04	116	76	74	251	262		64	10	✓
6	30		772.3	.18	2.74	2.74	117	80	74	252	263		62	8	✓
7	35		777.1	.16	2.43	2.43	118	80	74	252	261		62	7	✓
8	40		782.0	.16	2.43	2.43	118	80	74	251	257		61	7	✓
9	45		786.8	.18	2.74	2.74	118	82	76	252	250		60	7	✓
10	50		792.0	.18	2.74	2.74	118	82	76	251	263		59	8	✓
11	55		797.2	.18	2.74	2.74	118	82	76	260	257		60	8	✓
12	60	1100	802.005	.19	2.56	2.76	118	84	80	258	257		64	8	✓
1	65		806.1	.20	3.08	3.08	114	84	80	259	258		63	9	—
2	70		812.8	.20	3.08	3.08	117	86	80	260	253		62	9	—
3	75		817.9	.20	3.07	3.07	118	86	80	261	251		61	9	✓
4	80		823.8	.21	3.22	3.22	118	86	80	258	257		62	9	✓
5	85		829.0	.18	2.76	2.76	119	86	80	259	261		63	8	✓
6	90		834.00	.18	2.76	2.76	120	88	80	251	248		59	8	✓
7	95		838.8	.16	2.45	2.45	121	88	80	250	253		58	6	✓
8	100		843.7	.16	2.45	2.45	121	88	80	253	247		59	6	✓
9	105		848.3	.18	2.75	2.75	122	88	80	251	249		60	6	✓
10	110		853.8	.18	2.75	2.75	122	88	82	252	253		60	6	✓
11	115		859.0	.18	2.75	2.75	122	88	82	251	253		59	6	✓
12	120	1203	864.149	.18	2.76	2.76	122	88	84	251	255		58	6	✓

*Record pressure differentials to 2 significant figures, e.g., 0.015, 0.88, 1.2, etc. Comments: CO_2 0% O_2 21% Fyrite 917

(continue on reverse, if necessary)

S-ETFD-1/93

000075

6543

INTERNATIONAL TECHNOLOGY CORPORATION

PARTICULATE/METALS TRAIN
SAMPLE RECOVERY AND INTEGRITY SHEET

Plant: Fermco
Sample location: Vitrification out
Run number: V-PM-1
Filter number(s): 9470019

Sample date: 8-8-94
Recovery date: 8-8-94
Recovered by: AJ

MOISTURE

Impingers	~~Condensate~~	1st	2nd	3rd	4th	5th
Contents	~~Empty~~	5%HNO_3/10%H_2O_2		4% $KMnO_4$	10% H2SO4	Silica gel
Final wt/vol	115 g	102 g	2 g	102 g	100 g	232 g
Initial wt/vol	100 g	100 g	0 g	100 g	100 g	200 g
Net Gain	15 g	2 g	2 g	2 g	0 g	32 g

Description of impinger water: 1,2,3 clear 4,5 Dark Purple

Total moisture: 53 g ✓ (DTO)

RECOVERED SAMPLE

Filter container number(s): 0386B
Sealed: ✓
Description of particulate on filter: –

	Sample solution/rinse container numbers	Sealed/liquid level marked
Acetone probe rinse	0491A	✓
5%HNO_3/10%H_2O_2 solution and 0.1N HNO_3 rinse	0492A	✓
$KMnO_4$ solution and rinse	0385A	✓
8N HCl rinse	0386A	✓

Samples stored and locked: ✓
Remarks:

2/27/92

000076

INTERNATIONAL TECHNOLOGY CORPORATION

Emission Testing Field Data

Plant and City	Date	Sampling Location	Sample Type	Run Number
Formica Fernald	8/8/94	Vitrification outlet	Particulate/metals	V-PM-5

Operator(s)	Bar. Press. (in. Hg)	Static Press. (in. H_2O)	Amb. Temp. (°F)	Filter Number(s)	Probe Length and Type	Nozzle Dia. (in.)	Nozzle Number
GTB6	29.70	-.1	80	9470017	4' Glass	.275	6420

Moisture (%)	Meter Box No.	Meter ΔH@	Meter Cal. Factor (Y)	K Factor	Probe Heat (°F)	Box Heat (°F)	Therm. No.	Pitot No.	Imp. Therm. No.	Gas Bag Pump No.	Gas Bag Sys. Leak Check	Train Leak Check (initial) in. Hg	Train Leak Check (initial) CFM	Train Leak Check (final) in. Hg	Train Leak Check (final) CFM	Pitot Leak Check initial	Pitot Leak Check final
5.	FT-8	1.53	.970	4.82	250	250			I-91	301	✓	15.	.001	5.	.002	/	/

Traverse Point No.	Sampling Time (min.)	Clock Time (24-hr)	Gas Meter Reading (Vm), ft^3	Velocity Head* (ΔP), in. H_2O	Orifice Pressure Differential (ΔH), in. H_2O* Desired	Orifice Pressure Differential (ΔH), in. H_2O* Actual	Temperature (°F) Stack (T_s)	Dry Gas Meter Inlet (T_{mi})	Dry Gas Meter Outlet (T_{mo})	Probe	Sample Box	Resin	Impinger	Pump Vac. (in. Hg)	Gas Bag Sample Data
	0	15:10	929.681												
1	5.		933.2	.25	1.14	1.14	129.	94.	92.	251.	261.	NA.	66.	2.	–
2	10		936.6	.26	1.18	1.18	127	94	92	255	262		65	2	–
3	15		940.2	.26	1.18	1.18	128	94	92	253	257		64	2	✓
4	20		943.5	.24	1.09	1.09	129	94	92	255	253		66	2	✓
5	25		946.7	.22	1.00	1.00	129	94	92	255	251		66	2	✓
6	30		949.8	.21	.95	.95	129	94	92	254	250		65	2	✓
7	35		952.8	.18	.82	.82	129	94	92	253	248		64	2	✓
8	40		955.8	.21	.95	.95	130	94	92	251	252		63	2	✓
9	45		958.9	.21	.95	.95	129	94	92	250	249		63	2	✓
10	50		962.0	.20	.91	.91	129	96	92	249	253		62	2	✓
11	55		964.8	.18	.82	.82	128	96	92	253	257		61	2	✓
12	60	1610	967.620	.18	.82	.82	128	96	92	253	252		60	2	✓
1	65		972.0	.25	1.14	1.14	127	96	92	252	251		60	2	–
2	70		974.7	.26	1.17	1.17	131	96	92	253	251		60	2	–
3	75		977.8	.22	1.00	1.00	128	96	92	251	257		61	2	✓
4	80		980.9	.20	.91	.91	129	96	94	247	256		62	2	✓
5	85		983.8	.19	.86	.86	129	96	94	253	256		62	2	✓
6	90		986.7	.18	.82	.82	129	96	94	251	248		62	2	✓
7	95		989.5	.18	.82	.82	129	96	94	251	249		63	2	✓
8	100		992.8	.22	1.00	1.00	129	96	94	249	251		63	2	✓
9	105		996.1	.22	1.00	1.00	129	96	96	251	251		64	2	✓
10	110		999.4	.22	1.00	1.00	129	96	96	253	251		64	2	✓
11	115		1002.6	.22	1.00	1.00	129	96	96	252	251		64	2	
12	120	1713	1005.953	.23	1.05	1.05	129	96	96	250	254		65	2	

*Record pressure differentials to 2 significant figures, e.g., 0.015, 0.88, 1.2, etc. Comments: CO_2 0% O_2 21% (Fuel)

(continue on reverse, if necessary)

B-17

000027

6543

S-ETFD-1/93

INTERNATIONAL TECHNOLOGY CORPORATION

PARTICULATE/METALS TRAIN
SAMPLE RECOVERY AND INTEGRITY SHEET

Plant Fermco
Sample location Vitrification
Run number V-fm-3
Filter number(s) 9470017

Sample date 8-8-94
Recovery date 8-9-94
Recovered by [illegible]

MOISTURE

Impingers	Condensate	1st	2nd	3rd	4th	5th
Contents	Empty	5%HNO_3/10%H_2O_2		4% $KMnO_4$	H_2SO_4	Silica gel
Final wt/vol	104 g	100 g	2 g	100 g	100 g	210 g
Initial wt/vol	100 g	100 g	2000 g	100 g	100 g	200 g
Net Gain	4 g	0 g	2 g	0 g	0 g	10 g

Description of impinger water Clear 1,2,3 Dark 4,5

Total moisture 16 g

RECOVERED SAMPLE

Filter container number(s) 0404B Sealed ✓
Description of particulate on filter No visable

	Sample solution/rinse container numbers	Sealed/liquid level marked
Acetone probe rinse	0403A	✓
5%HNO_3/10%H_2O_2 solution and 0.1N HNO_3 rinse	0404A	✓
$KMnO_4$ solution and rinse	0405A	✓
8N HCl rinse	0406A	✓

Samples stored and locked
Remarks

2/27/92

000078

INTERNATIONAL TECHNOLOGY CORPORATION

Emission Testing Field Data

Plant and City	Date	Sampling Location	Sample Type	Run Number
Fernald	8/4/94	Vitrification outlet	Radionuclides	V-R-2

Operator(s)	Bar. Press. (in. Hg)	Static Press. (in. H_2O)	Amb. Temp. (°F)	Filter Number(s)	Probe Length and Type	Nozzle Dia. (in.)	Nozzle Number
GT BG	29.45	-.1	90.	9410093	4' Glass	.313	S-102

Moisture (%)	Meter Box No.	Meter ΔH@	Meter Cal. Factor (Y)	K Factor	Probe Heat (°F)	Box Heat (°F)	Therm. No.	Pitot No.	Imp. Therm. No.	Gas Bag Pump No.	Gas Bag Sys. Leak Check	Train Leak Check (initial) in. Hg	Train Leak Check (initial) CFM	Train Leak Check (final) in. Hg	Train Leak Check (final) CFM	Pitot Leak Check initial	Pitot Leak Check final
~5.	FT-8	1.53	.970	8.1	250	250	432	300	197	301	✓	15.	.001	6.	.001	✓	✓

Traverse Point No.	Sampling Time (min.)	Clock Time (24-hr)	Gas Meter Reading (Vm), ft^3	Velocity Head* (ΔP), in. H_2O	Orifice Pressure Differential (ΔH), in. H_2O* Desired	Orifice Pressure Differential (ΔH), in. H_2O* Actual	Temperature (°F) Stack (T_s)	Dry Gas Meter Inlet (T_{mi})	Dry Gas Meter Outlet (T_{mo})	Probe	Sample Box	Resin	Impinger	Pump Vac. (in. Hg)	Gas Bag Sample Data
	0	11:52	658.802												
1	2.5		657.1	.10	.87	.87	134.	92.	92.	261.	255.	NA	61.	3.	—
2	5.0		661.8	.11	.96	.96	134	92	92	261	254		60	3	
3	7.5		663.7	.11	.96	.96	133	92	92	257	247		64	3	✓
4	10.0		665.0	.12	1.05	1.05	134	92	92	260	252		64	3	✓
5	12.5		667.1	.12	1.05	1.05	134	92	92	261	251		60	3	✓
6	15.0		668.1	.10	.87	.87	135	94	92	261	252		61	3	✓
7	17.5		669.9	.12	1.05	1.05	136	94	92	261	253		61	3	✓
8	20.0		671.7	.13	1.14	1.14	136	94	92	260	250		60	4	✓
9	22.5		673.6	.16	1.40	1.40	137	94	92	263	247		60	4	✓
10	25.0		675.4	.17	1.48	1.48	136	94	92	253	253		60	4	✓
11	27.5		677.0	.16	1.40	1.40	136	94	92	251	255		64	4	✓
12	30.0	1222	678.966	.16	1.40	1.40	136	94	92	260	254		64	4	✓
1	32.5		680.1	.11	.96	.96	134	94	92	262	247		64	4	✓
2	35.0		682.9	.12	1.04	1.04	133	94	92	258	251		64	4	✓
3	37.5		683.8	.12	1.04	1.04	133	94	92	255	252		63	4	✓
4	40.0		685.8	.14	1.21	1.21	133	96	92	253	252		62	5	✓
5	42.5		687.2	.14	1.21	1.21	135	96	92	254	251		64	5	✓
6	45.0		688.9	.15	1.30	1.30	136	96	94	254	251		65	5	✓
7	47.5		690.8	.13	1.13	1.13	137	96	94	253	255		65	5	✓
8	50.0		692.5	.12	1.05	1.05	137	96	94	251	254		66	5	✓
9	52.5		694.3	.12	1.05	1.05	138	96	94	252	252		66	5	
10	55.0		696.0	.13	1.13	1.13	138	96	94	251	252		66	5	✓
11	57.5		697.9	.15	1.31	1.31	137	96	94	251	251		65	5	✓
12	60.0	1255	699.519	.16	1.39	1.39	137	96	94	251	253		64	5	✓

*Record pressure differentials to 2 significant figures, e.g., 0.015, 0.88, 1.2, etc. Comments: (CO_2 0% O_2 21%) (CO) (THC)

(continue on reverse, if necessary)

S-ETFD-1/93

6543

B-21

000029

PARTICULATE SAMPLE RECOVERY AND INTEGRITY SHEET

Plant Fernald Sample date 8-4-91
Sample location Vitrification outlet Recovery date 8-4-91
Run number V-R-2 Recovered by G Thress
Filter number(s) 9410093

MOISTURE

Impingers			Silica gel		
Final volume (wt)	230	ml(g)	Final wt	207.8	g
Initial volume (wt)	200	ml(g)	Initial wt	200	g
Net volume (wt)	30	ml(g)	Net wt	~~27~~ 7.8	g
Description of impinger water	clear			5	% spent

Total moisture ~~32~~ 37.8 g

RECOVERED SAMPLE

Filter container number(s) 0487B Sealed ✓
Description of particulate on filter No visible

Probe rinse container no.	0487A	Liquid level marked	✓
Acetone blank container no.	0384A	Liquid level marked	✓
Impinger contents container no.	0488A	Liquid level marked	✓
H_2O blank container no.	0382A	Liquid level marked	✓

Samples stored and locked ✓
Remarks

LABORATORY CUSTODY

Received by Date
Remarks

INTERNATIONAL TECHNOLOGY CORPORATION

Emission Testing Field Data

Plant and City	Date	Sampling Location	Sample Type	Run Number
Fernald	8/14/94	Vitrification outlet	Radionuclides	V-R-1

Operator(s)	Bar. Press. (in. Hg)	Static Press. (in. H_2O)	Amb. Temp. (°F)	Filter Number(s)	Probe Length and Type	Nozzle Dia. (in.)	Nozzle Number
GT, BG	29.45	-.1	88	9410094	4' Glass	.314	S-115

Moisture (%)	Meter Box No.	Meter ΔH@	Meter Cal. Factor (Y)	K Factor	Probe Heat (°F)	Box Heat (°F)	Therm. No.	Pitot No.	Imp. Therm. No.	Gas Bag Pump No.	Gas Bag Sys. Leak Check	Train Leak Check (initial) in. Hg	Train Leak Check (initial) CFM	Train Leak Check (final) in. Hg	Train Leak Check (final) CFM	Pitot Leak Check initial	Pitot Leak Check final
~5	FT-8	1.53	.970	8.2	250	250	100	502	97	501	✓	15	.003	5	.000	✓	✓

Traverse Point No.	Sampling Time (min.)	Clock Time (24-hr)	Gas Meter Reading (Vm), ft^3	Velocity Head* (ΔP), in. H_2O	Orifice Pressure Differential (ΔH), in. H_2O* Desired	Orifice Pressure Differential (ΔH), in. H_2O* Actual	Temperature (°F) Stack (T_s)	Dry Gas Meter Inlet (T_{mi})	Dry Gas Meter Outlet (T_{mo})	Probe	Sample Box	Resin	Imp-inger	Pump Vac. (in. Hg)	Gas Bag Sample Data
	0	9:33	620.468												
1	2.5		622.1	.12	1.07	1.07	138	90	92	258	260	104	62	3	—
2	5.0		623.7	.10	.80	.80	135	92	92	261	258		61	3	—
3	7.5		625.1	.09	.80	.80	138	92	92	262	255		62	3	—
4	10.0		626.4	.11	.98	.98	136	92	92	261	257		62	3	✓
5	12.5		628.0	.11	.97	.97	135	92	92	261	256		64	3	✓
6	15.0		629.5	.10	.89	.89	135	92	92	258	252		63	3	✓
7	17.5		630.9	.10	.89	.89	136	92	92	258	253		64	3	✓
8	20.0		632.7	.12	1.06	1.06	136	92	91	258	254		64	3	✓
9	22.5		634.4	.14	1.24	1.24	136	92	91	258	253		64	3	✓
10	25.0		636.5	.15	1.33	1.33	136	92	91	258	250		64	3	✓
11	27.5		638.1	.15	1.33	1.33	135	92	92	260	251		63	3	✓
12	30.0	1003	639.725	.14	1.24	1.24	135	92	92	261	248		64	3	
1	32.5		641.3	.10	.88	.88	135	92	92	258	261		63	3	—
2	35.0		642.7	.10	.88	.88	134	92	92	256	250		62	3	—
3	37.5		644.2	.10	.80	.80	133	92	92	256	253		61	3	✓
4	40.0		645.7	.10	.80	.80	133	92	92	256	253		61	3	✓
5	42.5		647.2	.12	1.06	1.06	135	92	92	261	255		58	3	✓
6	45.0		648.8	.11	.97	.97	135	92	92	261	255		57	3	✓
7	47.5		650.3	.10	.89	.89	136	92	92	261	249		57	3	✓
8	50.0		651.9	.10	.89	.89	137	92	92	261	253		58	3	✓
9	52.5		653.0	.11	.98	.98	137	92	92	258	255		61	3	✓
10	55.0		655.4	.12	1.06	1.06	137	92	92	255	255		61	3	✓
11	57.5		656.9	.13	1.15	1.15	137	92	92	258	256		60	3	✓
12	60.0	1036	658.380	.13	1.15	1.15	137	92	92	251	253		62	3	✓

*Record pressure differentials to 2 significant figures, e.g., 0.015, 0.88, 1.2, etc. Comments: O_2 21% CO_2 0% CO

14.35 THC

(continue on reverse, if necessary)

S-ETFD-1/93

6543

B-19

000081

PARTICULATE SAMPLE RECOVERY AND INTEGRITY SHEET

Plant Fernco Sample date 8-4-94

Sample location Vitrification outlet Recovery date 8-4-94

Run number V-R-1 Recovered by G Thress

Filter number(s) 9410095

MOISTURE

Impingers			Silica gel		
Final volume (wt)	242	ml(g)	Final wt	205.6	g
Initial volume (wt)	200	ml(g)	Initial wt	200	g
Net volume (wt)	42	ml(g)	Net wt	5.6	g
Description of impinger water	Clear			2	% spent

Total moisture 47.6 g

RECOVERED SAMPLE

Filter container number(s) 0380 B Sealed ✓

Description of particulate on filter No visible

Probe rinse container no.	0380A	Liquid level marked	✓
Acetone blank container no.	0384A	Liquid level marked	✓
Impinger contents container no.	0383A	Liquid level marked	✓
H_2O blank container no.	0382A	Liquid level marked	✓

Samples stored and locked

Remarks

LABORATORY CUSTODY

Received by Date

Remarks

INTERNATIONAL TECHNOLOGY CORPORATION

Emission Testing Field Data

Plant and City		Date	Sampling Location	Sample Type	Run Number
Ferrmco	Fernald	8/8/91	Vitrification Outlet	Part/Metals	V-PM-2

Operator(s)	Bar. Press. (in. Hg)	Static Press. (in. H_2O)	Amb. Temp. (°F)	Filter Number(s)	Probe Length and Type	Nozzle Dia. (in.)	Nozzle Number
GT, BG	29.70	-.1	78	9470018	4' Glass	.260	G-411

Moisture (%)	Meter Box No.	Meter ΔH@	Meter Cal. Factor (Y)	K Factor	Probe Heat (°F)	Box Heat (°F)	Therm. No.	Pitot No.	Imp. Therm. No.	Gas Bag Pump No.	Gas Bag Sys. Leak Check	Train Leak Check (initial) in. Hg	Train Leak Check (initial) CFM	Train Leak Check (final) in. Hg	Train Leak Check (final) CFM	Pitot Leak Check initial	Pitot Leak Check final
5	FC-8	1.53	.978	3.85	250	250	100	502	I-91	301	✓	15	.002	8	.000	✓	✓

Traverse Point No.	Sampling Time (min.)	Clock Time (24-hr)	Gas Meter Reading (Vm), ft^3	Velocity Head* (ΔP), in. H_2O	Orifice Pressure Differential (ΔH), in. H_2O* Desired	Orifice Pressure Differential (ΔH), in. H_2O* Actual	Temperature (°F) Stack (T_s)	Dry Gas Meter Inlet (T_{mi})	Dry Gas Meter Outlet (T_{mo})	Probe	Sample Box	Resin	Impinger	Pump Vac. (in. Hg)	Gas Bag Sample Data
	0	12:15	864.457												
1	5		867.3	.22	.81	.81	118	92	88	256	251	NA	68	5	–
2	10		870.5	.25	.91	.91	122	92	90	253	257		65	3	–
3	15		873.4	.24	.88	.88	123	92	90	251	262		64	3	✓
4	20		876.3	.22	.80	.80	124	92	90	254	263		60	3	✓
5	25		879.1	.20	.73	.73	124	94	90	254	261		60	3	✓
6	30		881.7	.18	.66	.66	124	94	90	254	261		60	2	✓
7	35		884.1	.16	.58	.58	125	94	90	251	258		60	2	✓
8	40		886.7	.18	.66	.66	125	94	90	258	251		60	2	✓
9	45		889.4	.18	.66	.66	125	94	90	253	251		61	2	✓
10	50		891.9	.16	.58	.58	125	94	90	253	250		59	2	✓
11	55		894.5	.17	.62	.62	124	94	90	251	248		59	2	✓
12	60	1315	896.927	.17	.62	.62	124	94	90	252	253		57	2	✓
1	65		899.400	.23	.85	.85	118	94	90	260	253		57	2	–
2	70		902.5	.25	.92	.92	120	94	90	258	257		57	2	–
3	75		905.4	.24	.87	.87	125	94	90	257	253		59	2	✓
4	80		908.3	.23	.83	.83	127	94	90	261	254		59	2	✓
5	85		911.0	.20	.73	.73	127	94	90	262	253		62	2	✓
6	90		913.7	.18	.65	.65	127	94	90	260	257		63	2	✓
7	95		916.4	.20	.72	.72	128	94	90	260	259		59	2	✓
8	100		918.9	.21	.76	.76	128	94	90	253	257		60	2	✓
9	105		922.1	.20	.72	.72	128	94	90	253	257		62	2	✓
10	110		924.5	.18	.65	.65	127	94	90	257	253		60	2	✓
11	115		926.9	.15	.55	.55	127	94	92	255	252		60	2	✓
12	120	1422	929.395	.15	.55	.55	127	94	92	252	253		62	2	✓

*Record pressure differentials to 2 significant figures, e.g., 0.015, 0.88, 1.2, etc. Comments: CO_2 0% O_2 21% Fyrite

(continue on reverse, if necessary)

S-ETFD-1/93

B-15

000083

6543

INTERNATIONAL TECHNOLOGY CORPORATION

PARTICULATE/METALS TRAIN
SAMPLE RECOVERY AND INTEGRITY SHEET

Plant Fernco
Sample location Vitrification outlet
Run number V-PM-2
Filter number(s) 9470018

Sample date 8-8-94
Recovery date 8-8-94
Recovered by [illegible]

MOISTURE

Impingers	~~Condensate~~	1st	2nd	3rd	4th	5th
Contents	~~Empty~~	5%HNO_3/10%H_2O_2		4% $KMnO_4$	H_2SO_4	Silica gel
Final wt/vol	108 g	100 g	0 g	100 g	100 g	215 g
Initial wt/vol	100 g	100 g	0 g	100 g	100 g	200 g
Net Gain	8 g	0 g	0 g	0 g	0 g	15 g

Description of impinger water Clear 1,2,3 Dark 4,5

Total moisture 25 g

RECOVERED SAMPLE

Filter container number(s) 0407B Sealed ✓
Description of particulate on filter No visible

	Sample solution/rinse container numbers	Sealed/liquid level marked
Acetone probe rinse	0407A	✓
5%HNO_3/10%H_2O_2 solution and 0.1N HNO_3 rinse	0400A	✓
$KMnO_4$ solution and rinse	0401A	✓
8N HCl rinse	0402A	✓

Samples stored and locked
Remarks

2/27/92

INTERNATIONAL TECHNOLOGY CORPORATION

Emission Testing Field Data

Plant and City	Date	Sampling Location	Sample Type	Run Number
Fernco	8/14/94	Vitrification Outlet	Radionuclides	V-R-3

Operator(s)	Bar. Press. (in. Hg)	Static Press. (in. H_2O)	Amb. Temp. (°F)	Filter Number(s)	Probe Length and Type	Nozzle Dia. (in.)	Nozzle Number
GT, BG	29.45	-.1	90.	9410069	4' Glass	.314	S-110

Moisture (%)	Meter Box No.	Meter ΔH@	Meter Cal. Factor (Y)	K Factor	Probe Heat (°F)	Box Heat (°F)	Therm. No.	Pitot No.	Imp. Therm. No.	Gas Bag Pump No.	Gas Bag Sys. Leak Check	Train Leak Check (initial) in. Hg	Train Leak Check (initial) CFM	Train Leak Check (final) in. Hg	Train Leak Check (final) CFM	Pitot Leak Check initial	Pitot Leak Check final
~5.	FT-8	1.53	.970	8.2	250	250	100	502	171	301	✓	20.	.002	5.	.000	✓	✓

Traverse Point No.	Sampling Time (min.)	Clock Time (24-hr)	Gas Meter Reading (Vm), ft^3	Velocity Head* (ΔP), in. H_2O	Orifice Pressure Differential (ΔH), in. H_2O* Desired	Orifice Pressure Differential (ΔH), in. H_2O* Actual	Temperature (°F) Stack (T_s)	Dry Gas Meter Inlet (T_{mi})	Dry Gas Meter Outlet (T_{mo})	Probe	Sample Box	Resin	Impinger	Pump Vac. (in. Hg)	Gas Bag Sample Data
	0	13:23	699.816												
1	2.5		701.4	.10	.88	.88	133	96	96	253	242		66	3	—
2	5.0		702.8	.10	.88	.88	137	96	96	251	253		66	3	—
3	7.5		704.4	.10	.88	.88	137	96	96	255	248		66	3	✓
4	10.0		705.7	.10	.88	.88	137	96	96	253	252		66	3	✓
5	12.5		707.3	.11	.97	.97	138	96	96	250	248		65	3	✓
6	15.0		708.9	.11	.97	.97	138	96	96	249	253		64	3	✓
7	17.5		710.6	.13	1.15	1.15	138	96	96	253	253		64	3	✓
8	20.0		712.5	.15	1.32	1.32	138	96	96	256	254		63	3	✓
9	22.5		714.4	.16	1.41	1.41	138	97	97	253	254		62	3	✓
10	25.0		716.2	.16	1.41	1.41	139	97	97	255	254		63	3	✓
11	27.5		718.3	.16	1.41	1.41	137	97	97	256	254		62	3	✓
12	30.0	1353	719.937	.15	1.32	1.32	136	97	97	251	252		62	3	✓
1	32.5		721.5	.12	1.05	1.05	134	97	97	256	258		64	3	—
2	35.0		723.4	.12	1.05	1.05	137	98	98	257	260		63	3	—
3	37.5		724.9	.13	1.14	1.14	137	98	98	261	258		62	3	✓
4	40.0		726.8	.14	1.23	1.23	137	98	98	259	253		60	3	✓
5	42.5		728.5	.14	1.23	1.23	138	98	98	257	253		60	3	✓
6	45.0		730.2	.11	.97	.97	138	98	98	257	249		59	3	✓
7	47.5		731.8	.11	.97	.97	138	98	98	258	249		59	3	✓
8	50.0		733.2	.11	.97	.97	137	98	98	260	253		61	3	✓
9	52.5		735.0	.13	1.15	1.15	137	98	98	261	253		62	3	✓
10	55.0		736.8	.13	1.14	1.14	138	98	98	258	253		63	3	✓
11	57.5		738.7	.15	1.32	1.32	139	98	98	260	251		64	3	✓
12	60.0	1426	740.446	.13	1.32	1.32	139	98	98	257	253		64	3	✓

*Record pressure differentials to 2 significant figures, e.g., 0.015, 0.88, 1.2, etc. Comments: CO_2 0% O_2 21% Finite THC CO

(continue on reverse, if necessary)

S-ETFD-1/93

6543

B-23

000085

PARTICULATE SAMPLE RECOVERY AND INTEGRITY SHEET

Plant Ferroco Sample date 8-4-94
Sample location Vitrification outlet Recovery date 8-4-94
Run number V-R-3 Recovered by
Filter number(s) 94100109

MOISTURE

Impingers			Silica gel		
Final volume (wt)	226	ml(g)	Final wt	205	g
Initial volume (wt)	200	ml(g)	Initial wt	200	g
Net volume (wt)	26	ml(g)	Net wt	5.0	g
Description of impinger water	Clear			5	% spent

Total moisture 34.0 g

RECOVERED SAMPLE

Filter container number(s) 0489 B Sealed ✓
Description of particulate on filter No Visible

Probe rinse container no.	0489 A	Liquid level marked	✓
Acetone blank container no.	0384A	Liquid level marked	✓
Impinger contents container no.	0490A	Liquid level marked	✓
H_2O blank container no.	0382A	Liquid level marked	✓

Samples stored and locked ✓
Remarks

LABORATORY CUSTODY

Received by Date
Remarks

INTERNATIONAL TECHNOLOGY CORPORATION

Emission Testing Field Data

Plant and City	Date	Sampling Location	Sample Type	Run Number
Fermco	9/14/94	Vitrification outlet	FI	V-F-1

Operator(s)	Bar. Press. (in. Hg)	Static Press. (in. H_2O)	Amb. Temp. (°F)	Filter Number(s)	Probe Length and Type	Nozzle Dia. (in.)	Nozzle Number
GT, DC	29.73	-.1	80.	Na	4' Glass	.312	5-104

Moisture (%)	Meter Box No.	Meter ΔH@	Meter Cal. Factor (Y)	K Factor	Probe Heat (°F)	Box Heat (°F)	Therm. No.	Pitot No.	Imp. Therm. No.	Gas Bag Pump No.	Gas Bag Sys. Leak Check	Train Leak Check (Initial) in. Hg	Train Leak Check (Initial) CFM	Train Leak Check (final) in. Hg	Train Leak Check (final) CFM	Pitot Leak Check initial	Pitot Leak Check final
~6.	FT-9	1.60	.951	8.22	250	—	432	300	I-6	-	✓	15.	.001	5.	.000	✓	✓

Traverse Point No.	Sampling Time (min.)	Clock Time (24-hr)	Gas Meter Reading (Vm), ft^3	Velocity Head* (ΔP), in. H_2O	Orifice Pressure Differential (ΔH), in. H_2O* Desired	Actual	Stack (T_s)	Dry Gas Meter Inlet (T_{mi})	Dry Gas Meter Outlet (T_{mo})	Probe	Sample Box	Resin	Impinger	Pump Vac. (in. Hg)	Gas Bag Sample Data
	0	12:42	403.436												
1	2.5		405.5	.24	1.86	1.86	116	84	83	258	NA	NA	66	2	—
2	5.0		408.1	.26	2.01	2.01	119	84	84	256			65	2	—
3	7.5		410.1	.27	2.08	2.08	121	84	84	253			65	2	—
4	10.0		412.2	.27	2.08	2.08	121	84	84	253			65	2	✓
5	12.5		414.6	.28	2.16	2.16	121	84	84	250			66	2	✓
6	15.0		416.9	.30	2.31	2.31	122	85	84	248			65	2	✓
7	17.5		419.4	.27	2.08	2.08	122	86	84	251			64	2	✓
8	20.0		422.1	.28	2.16	2.16	122	87	85	250			63	2	✓
9	22.5		424.1	.31	2.39	2.39	123	88	85	251			62	2	✓
10	25.0		426.9	.33	2.55	2.55	123	89	85	248			62	2	✓
11	27.5		429.4	.35	2.70	2.70	123	90	86	255			62	2	✓
12	30.0		431.970	.35	2.71	2.71	123	92	86	253			64	2	✓
1	32.5	1320	434.0	.17	1.32	1.32	123	94	88	257			62	2	—
2	35.0		435.6	.15	1.16	1.16	124	94	88	253			60	2	—
3	37.5		437.3	.14	1.09	1.09	125	94	89	250			62	2	✓
4	40.0		438.6	.15	1.16	1.16	127	94	89	248			60	2	✓
5	42.5		440.7	.15	1.16	1.16	127	94	89	248			60	2	✓
6	45.0		442.6	.16	1.24	1.24	128	95	90	251			61	2	✓
7	47.5		444.2	.15	1.16	1.16	129	96	90	252			61	2	✓
8	50.0		445.9	.15	1.16	1.16	129	96	90	252			61	2	✓
9	52.5		447.8	.17	1.31	1.31	130	96	90	254			60	2	✓
10	55.0		450.0	.19	1.46	1.46	131	97	91	253			60	2	✓
11	57.5		451.9	.20	1.54	1.54	131	98	92	250			61	2	✓
12	60	1347	453.6	.20	1.54	1.54	131	98	92	251			60	2	—

*Record pressure differentials to 2 significant figures, e.g., 0.015, 0.88, 1.2, etc. Comments: CO_2 % 0 O_2 21% Fyrite

(continue on reverse, if necessary)

S-ETFD-1/93

B-25

000087

6543

METHOD 13B SAMPLE RECOVERY AND INTEGRITY SHEET

Plant Formco Sample date 9/14/94

Run No. V-F-1 Recovered by G Thress Recovery date 9/15/94

MOISTURE

Impingers			Silica gel		
Final volume (wt)	210	ml (g)	Final wt	217.6	g
Initial volume (wt)	200	ml (g)	Initial wt	200	g
Net volume (wt)	10	ml (g)	Net wt	17.6	g

Total moisture 27.6 g ✓ 20 % spent

Description of impinger water Clear

RECOVERED SAMPLE

Impinger Nos. 1, 2, and 3 contents Container No.	446 A	Liquid level marked	✓
Impinger No. 4 contents Container No.	NA	Liquid level marked	
Deionized water blank/Filter Container No.	471A	Liquid level marked	✓
0.1 N NaOH blank Container No.	NA	Liquid level marked	

Samples stored and locked ✓

Remarks

LABORATORY CUSTODY

Received by Date

Remarks

INTERNATIONAL TECHNOLOGY CORPORATION

Emission Testing Field Data

Plant and City	Date	Sampling Location	Sample Type	Run Number
Fernco.	9/14/94	Vitrification - Outlet	FI	V-F-2

Operator(s)	Bar. Press. (in. Hg)	Static Press. (in. H_2O)	Amb. Temp. (°F)	Filter Number(s)	Probe Length and Type	Nozzle Dia. (in.)	Nozzle Number
Cot, DC	29.73	-.1	82	NA	4' Glass	.312	5107

Moisture (%)	Meter Box No.	Meter Δ H @	Meter Cal. Factor (Y)	K Factor	Probe Heat (°F)	Box Heat (°F)	Therm. No.	Pitot No.	Imp. Therm. No.	Gas Bag Pump No.	Gas Bag Sys. Leak Check	Train Leak Check (initial) in. Hg	Train Leak Check (initial) CFM	Train Leak Check (final) in. Hg	Train Leak Check (final) CFM	Pitot Leak Check initial	Pitot Leak Check final
~6	FT-9	1.60	.951	8.22	250	NA	100	502	I-6	-	—	15	.003	5	.001	✓	✓

Traverse Point No.	Sampling Time (min.)	Clock Time (24-hr)	Gas Meter Reading (Vm), ft^3	Velocity Head* (ΔP), in. H_2O	Orifice Pressure Differential (ΔH), in. H_2O* Desired	Orifice Pressure Differential (ΔH), in. H_2O* Actual	Temperature (°F) Stack (T_s)	Dry Gas Meter Inlet (T_{mi})	Dry Gas Meter Outlet (T_{mo})	Probe	Sample Box	Resin	Impinger	Pump Vac. (in. Hg)	Gas Bag Sample Data
	0	14:20	453.934												
1	2.5		455.7	.14	1.08	1.08	132	95	95	243	NA	NA	66	2	—
2	5.0		457.2	.13	1.00	1.00	132	95	95	251			66	2	—
3	7.5		459.1	.13	1.00	1.00	134	95	95	253			66	2	✓
4	10.0		460.7	.14	1.08	1.08	134	95	95	251			65	2	✓
5	12.5		462.3	.14	1.08	1.08	134	95	95	251			64	2	✓
6	15.0		464.0	.13	1.00	1.00	135	95	95	252			64	2	✓
7	17.5		465.7	.15	1.15	1.15	135	97	95	253			62	2	✓
8	20.0		467.6	.18	1.38	1.38	135	97	95	252			62	2	✓
9	22.5		469.0	.20	1.54	1.54	135	98	95	248			62	2	✓
10	25.0		471.2	.20	1.54	1.54	134	99	95	251			62	2	✓
11	27.5		473.5	.20	1.54	1.54	134	100	95	252			61	2	✓
12	30.0		475.456	.21	1.62	1.62	134	100	95	251			60	2	✓
1	32.5		477.2	.15	1.16	1.16	134	102	96	251			60	2	—
2	35.0		478.8	.13	1.01	1.01	134	102	96	250			58	3	—
3	37.5		480.4	.12	.93	.93	134	102	96	248			60	2	✓
4	40.0		481.8	.14	1.08	1.08	135	102	97	247			62	2	✓
5	42.5		483.8	.14	1.08	1.08	136	103	97	251			64	2	✓
6	45.0		485.6	.16	1.24	1.24	136	103	97	251			64	2	✓
7	47.5		487.8	.19	1.47	1.47	135	103	97	252			63	3	✓
8	50.0		489.5	.20	1.55	1.55	135	104	98	257			62	3	✓
9	52.5		491.7	.20	1.55	1.55	135	104	98	258			62	3	✓
10	55.0		493.5	.20	1.55	1.55	134	105	98	256			62	3	✓
11	57.5		495.6	.21	1.64	1.64	133	105	99	257			62	3	✓
12	60.0	1525	497.634	.21	1.63	1.63	135	106	99	252			64	3	✓

*Record pressure differentials to 2 significant figures, e.g., 0.015, 0.88, 1.2, etc. Comments: CO_2 0% O_2 21%

(continue on reverse, if necessary)

S-ETFD-1/93

B-27

000089

6543

METHOD 13B SAMPLE RECOVERY AND INTEGRITY SHEET

Plant Fermco Sample date 9/14/94

Run No. V-E-2 Recovered by C. Thress Recovery date 9/15/94

MOISTURE

Impingers			Silica gel		
Final volume (wt)	230.0	ml (g)	Final wt	211.8	g
Initial volume (wt)	200.0	ml (g)	Initial wt	200	g
Net volume (wt)	30.0	ml (g)	Net wt	11.8	g

Total moisture 41.8 g ✓ (Sto) 20 % spent

Description of impinger water Clear

RECOVERED SAMPLE

Impinger Nos. 1, 2, and 3 contents Container No.	447A	Liquid level marked	✓
Impinger No. 4 contents Container No.	NA	Liquid level marked	—
Deionized water blank/Filter Container No.	471 A	Liquid level marked	✓
0.1 N NaOH blank Container No.	NA	Liquid level marked	—

Samples stored and locked ✓

Remarks

LABORATORY CUSTODY

Received by Date

Remarks

000090

INTERNATIONAL TECHNOLOGY CORPORATION

Emission Testing Field Data

Plant and City	Date	Sampling Location	Sample Type	Run Number
Fermco	9/14/94	Vitrification Outlet	FI-	V-F-3

Operator(s)	Bar. Press. (in. Hg)	Static Press. (in. H_2O)	Amb. Temp. (°F)	Filter Number(s)	Probe Length and Type	Nozzle Dia. (in.)	Nozzle Number
GT, DK	29.73	-.1	85	NA	4' Glass	.312	5-104

Moisture (%)	Meter Box No.	Meter ΔH@	Meter Cal. Factor (Y)	K Factor	Probe Heat (°F)	Box Heat (°F)	Therm. No.	Pitot No.	Imp. Therm. No.	Gas Bag Pump No.	Gas Bag Sys. Leak Check	Train Leak Check (initial) in. Hg	Train Leak Check (initial) CFM	Train Leak Check (final) in. Hg	Train Leak Check (final) CFM	Pitot Leak Check initial	Pitot Leak Check final
~1.	FT-9	1.60	.951	8.22	250	NA	425	002	E6	—	—	15.	.002	5.	.000	✓	✓

Traverse Point No.	Sampling Time (min.)	Clock Time (24-hr)	Gas Meter Reading (Vm), ft^3	Velocity Head* (ΔP), in. H_2O	Orifice Pressure Differential (ΔH), in. H_2O* Desired	Orifice Pressure Differential Actual	Temperature (°F) Stack (T_s)	Dry Gas Meter Inlet (T_{mi})	Dry Gas Meter Outlet (T_{mo})	Probe	Sample Box	Resin	Impinger	Pump Vac. (in. Hg)	Gas Bag Sample Data
	0	16:15	503.627												
1	2.5		505.5	.12	.93	.93	133.	100.	99.	248.	NA.	NA.	66.	2.	–
2	5.0		506.8	.12	.93	.93	135	99	98	251			66	2	–
3	7.5		508.4	.13	1.00	1.00	136	99	99	251			65	2	✓
4	10.0		510.0	.13	1.00	1.00	136	99	99	256			64	2	✓
5	12.5		511.7	.14	1.08	1.08	136	99	99	253			64	2	✓
6	15.0		513.5	.15	1.16	1.16	136	99	99	257			64	2	✓
7	17.5		515.3	.16	1.23	1.23	136	99	99	261			64	2	✓
8	20.0		517.0	.16	1.23	1.23	137	99	99	255			62	2	✓
9	22.5		521.0	.19	1.47	1.47	136	100	99	253			62	2	✓
10	25.0		522.7	.20	1.55	1.55	136	102	99	255			62	2	✓
11	27.5		523.9	.22	1.71	1.71	134	103	100	253			62	2	✓
12	30.0		525.09 l	.20	1.55	1.55	136	104	100	251			62	3	✓
1	32.5		526.7	.13	1.01	1.01	134	105	100	248			62	2	–
2	35.0		528.4	.14	1.09	1.09	134	105	100	247			62	2	–
3	37.5		530.2	.14	1.09	1.09	135	105	100	243			62	2	✓
4	40.0		531.7	.13	1.01	1.01	135	105	100	252			64	3	✓
5	42.5		533.5	.13	1.01	1.01	136	106	100	248			64	3	✓
6	45.0		534.9	.12	.93	.93	136	106	100	251			64	3	✓
7	47.5		536.6	.14	1.09	1.09	136	106	100	251			64	3	✓
8	50.0		538.3	.15	1.16	1.16	136	106	101	253			65	3	✓
9	52.5		540.4	.17	1.32	1.32	136	107	101	257			65	3	✓
10	55		542.0	.17	1.32	1.32	136	107	101	255			66	3	✓
11	57.5		543.9	.18	1.40	1.40	135	107	101	253			66	3	✓
12	60	1720	545.814	.18	1.40	1.40	136	107	101	255			66	3	–

*Record pressure differentials to 2 significant figures, e.g., 0.015, 0.88, 1.2, etc. Comments: CO_2 0% O_2 21%

(continue on reverse, if necessary)

S-ETFD-1/93

B-29

000091

6543

METHOD 13B SAMPLE RECOVERY AND INTEGRITY SHEET

Plant Fernco Sample date 9/14/94

Run No. V-F-3 Recovered by G Threes Recovery date 9/15/94

MOISTURE

Impingers			Silica gel		
Final volume (wt)	224.0	ml (g)	Final wt	212.0	g
Initial volume (wt)	200.0	ml (g)	Initial wt	200	g
Net volume (wt)	24.0	ml (g)	Net wt	12	g

Total moisture 36.0 g ✓ 20 % spent

Description of impinger water Clear

RECOVERED SAMPLE

Impinger Nos. 1, 2, and 3 contents Container No.	448A	Liquid level marked	✓
Impinger No. 4 contents Container No.	NA	Liquid level marked	—
Deionized water blank/Filter Container No.	471A	Liquid level marked	✓
0.1 N NaOH blank Container No.	NA	Liquid level marked	—

Samples stored and locked ✓

Remarks

LABORATORY CUSTODY

Received by Date

Remarks

000092

INTERNATIONAL TECHNOLOGY CORPORATION

Emission Testing Field Data

Plant and City	Date	Sampling Location	Sample Type	Run Number
Fernco	9/14/94	Vitrification Outlet	HCl	V-Fiber-1

Operator(s)	Bar. Press. (in. Hg)	Static Press. (in. H_2O)	Amb. Temp. (°F)	Filter Number(s)	Probe Length and Type	Nozzle Dia. (in.)	Nozzle Number
GT DC	29.73	-.1	80.	NA	3' Glass	—	—

Moisture (%)	Meter Box No.	Meter ΔH@	Meter Cal. Factor (Y)	K Factor	Probe Heat (°F)	Box Heat (°F)	Therm. No.	Pitot No.	Imp. Therm. No.	Gas Bag Pump No.	Gas Bag Sys. Leak Check	Train Leak Check (initial) in. Hg	Train Leak Check (initial) CFM	Train Leak Check (final) in. Hg	Train Leak Check (final) CFM	Pitot Leak Check initial	Pitot Leak Check final
~6.	FT-11	1.81	.975	NA	250	250	—	—	I-1	—	✓	15.	.004	5.	.000		

Traverse Point No.	Sampling Time (min.)	Clock Time (24-hr)	Gas Meter Reading (Vm), ft^3	Velocity Head* (ΔP), in. H_2O	Orifice Pressure Differential (ΔH), in. H_2O* Desired	Actual	Temperature (°F) Stack (T_s)	Dry Gas Meter Inlet (T_{mi})	Dry Gas Meter Outlet (T_{mo})	Probe	Sample Box	Resin	Impinger	Pump Vac. (in. Hg)	Gas Bag Sample Data
	0	12:42	352.379												
1	10.		360.3	~~1.81~~	1.81	1.81	116.	86.	85.	250.	231.	NA.	66.	1.	—
	20		368.1		1.81	1.81	122	88	86	245	251		66	1	—
	30		376.108		1.81	1.81	122	91	87	251	249		64	1	✓
	40	1327	384.2		1.81	1.81	128	98	91	252	259		62	1	✓
	50		392.0		1.81	1.81	130	100	93	257	254		61	1	✓
	60	1347	400.044		1.81	1.81	132	103	94	251	252		60	1	✓

V_m = 47.592

T_m = 91.8°F

KH 11/22/94

KH 11/22/94

*Record pressure differentials to 2 significant figures, e.g., 0.015, 0.88, 1.2, etc. Comments:

(continue on reverse, if necessary)

S-ETFD-1/93

6543

B-31

000093

INTERNATIONAL TECHNOLOGY CORPORATION

~~HF~~/HCl/~~Cl_2~~ TRAIN
SAMPLE RECOVERY AND INTEGRITY SHEET

Plant: Fernico
Sample location: Vitrification outlet
Run number: V-C-1
Filter type: TFE

Sample date: 9/19/94
Recovery date: 9/15/94
Recovered by: CA

MOISTURE

Impingers	Condensate	1st	2nd	3rd	4th	5th
Contents	Empty	0.1N H_2SO_4		~~0.1N NaOH~~		Silica gel
Final wt/vol	X g	110 g	105 g	0 g	X g	g
Initial wt/vol	X g	100 g	100 g	0 g	X g	200 g
Net Gain	X g	10 g	5 g	0 g	X g	g

Description of impinger water: Clear

Total moisture _____ g

RECOVERED SAMPLE

	Sample solution/rinse container numbers	Sealed/liquid level marked
0.1N H_2SO_4 solution and DI water rinse	395A	✓
0.1N NaOH solution and DI water rinse	—	
H_2O	473A ~~382A~~	✓
0.1N H_2SO_4	472 A	✓

Samples stored and locked _____
Remarks _____

INTERNATIONAL TECHNOLOGY CORPORATION

Emission Testing Field Data

Plant and City	Date	Sampling Location	Sample Type	Run Number
Fernald	9/14/94	Vitrification outlet	HCl	V-HC-2

Operator(s)	Bar. Press. (in. Hg)	Static Press. (in. H_2O)	Amb. Temp. (°F)	Filter Number(s)	Probe Length and Type	Nozzle Dia. (in.)	Nozzle Number
GT, DC	29.73	-.1	82	NA	3' Glass	—	—

Moisture (%)	Meter Box No.	Meter ΔH@	Meter Cal. Factor (Y)	K Factor	Probe Heat (°F)	Box Heat (°F)	Therm. No.	Pitot No.	Imp. Therm. No.	Gas Bag Pump No.	Gas Bag Sys. Leak Check	Train Leak Check (initial) in. Hg	Train Leak Check (initial) CFM	Train Leak Check (final) in. Hg	Train Leak Check (final) CFM	Pitot Leak Check initial	Pitot Leak Check final
~6	FT-11	1.81	.975	NA	250	250	—	—	I-1	—	—	15	.002	5	.000	—	—

Traverse Point No.	Sampling Time (min.)	Clock Time (24-hr)	Gas Meter Reading (Vm), ft^3	Velocity Head* (ΔP), in. H_2O	Orifice Pressure Differential (ΔH), in. H_2O* Desired	Orifice Pressure Differential (ΔH), in. H_2O* Actual	Temperature (°F) Stack (T_s)	Dry Gas Meter Inlet (T_{mi})	Dry Gas Meter Outlet (T_{mo})	Probe	Sample Box	Resin	Impinger	Pump Vac. (in. Hg)	Gas Bag Sample Data
	0	14:30	400.283		1.81	1.81	132	98	96	250	253	NA	66	2	—
1	10		407.9		1.81	1.81	134	99	96	253	248	NA	64	2	—
	20		416.0		1.81	1.81	135	101	96	258	251	NA	62	2	—
	30		422.819		1.81	1.81	135	103	97	253	261	NA	60	2	—
	40		430.8		1.81	1.81	135	104	98	251	252		62	2	—
	50		438.9		1.81	1.81	134	106	98	253	251		62	2	—
	60	1525	446.959												
			V_m=46.676					T_m=99.3F							

*Record pressure differentials to 2 significant figures, e.g., 0.015, 0.88, 1.2, etc. Comments: _____ (continue on reverse, if necessary)

S-ETFD-1/93

6543

B-33

000095

INTERNATIONAL TECHNOLOGY CORPORATION

~~HF~~/HCl/~~Cl_2~~ TRAIN
SAMPLE RECOVERY AND INTEGRITY SHEET

Plant: Fernald
Sample location: Vitrification outlet
Run number: V-B2
Filter type: TFE

Sample date: 9-14-94
Recovery date: 9-15-94
Recovered by: GT

MOISTURE

Impingers	Condensate	1st	2nd	3rd	4th	5th
Contents	Empty	0.1N H_2SO_4		~~0.1N NaOH~~		Silica gel
Final wt/vol	X g	120 g	110 g	0 g	X g	214 g
Initial wt/vol	X g	100 g	100 g	0 g	X g	200 g
Net Gain	X g	20 g	10 g	0 g	X g	14 g

Description of impinger water: Clear

Total moisture: 44.0 g

RECOVERED SAMPLE

	Sample solution/rinse container numbers	Sealed/liquid level marked
0.1N H_2SO_4 solution and DI water rinse	469 A	✓
0.1N NaOH solution and DI water rinse	—	
H_2O	473A ~~382A~~	✓
0.1N H_2SO_4	472 A	✓

Samples stored and locked:
Remarks:

000096

INTERNATIONAL TECHNOLOGY CORPORATION

Emission Testing Field Data

Plant and City	Date	Sampling Location	Sample Type	Run Number
Formco	9/14/94	Incinerator Outlet	HCl	V-~~K~~-3

Operator(s)	Bar. Press. (in. Hg)	Static Press. (in. H_2O)	Amb. Temp. (°F)	Filter Number(s)	Probe Length and Type	Nozzle Dia. (in.)	Nozzle Number
GT, DC	29.73	-.1	85	NA	3' Glass	—	—

Moisture (%)	Meter Box No.	Meter ΔH@	Meter Cal. Factor (Y)	K Factor	Probe Heat (°F)	Box Heat (°F)	Therm. No.	Pitot No.	Imp. Therm. No.	Gas Bag Pump No.	Gas Bag Sys. Leak Check	Train Leak Check (initial) in. Hg	Train Leak Check (initial) CFM	Train Leak Check (final) in. Hg	Train Leak Check (final) CFM	Pitot Leak Check Initial	Pitot Leak Check final
~6	FT-11	1.81	.975	NA	250	250	—	—	I-1	—	—	15	.000	5	.000		

Traverse Point No.	Sampling Time (min.)	Clock Time (24-hr)	Gas Meter Reading (Vm), ft^3	Velocity Head* (ΔP), in. H_2O	Orifice Pressure Differential (ΔH), in. H_2O* Desired	Actual	Temperature (°F) Stack (T_s)	Dry Gas Meter Inlet (T_{mi})	Dry Gas Meter Outlet (T_{mo})	Probe	Sample Box	Resin	Impinger	Pump Vac. (in. Hg)	Gas Bag Sample Data
	0	16:15	447.438												
1	10		455.5		1.81	1.81	133	99	98	252	261	NA	66	2	—
	20		463.7		1.81	1.81	136	100	98	253	261		64	2	—
	30		471.588		1.81	1.81	136	102	98	250	257		62	2	—
	40		479.7		1.81	1.81	136	105	99	253	248		62	2	—
	50		487.8		1.81	1.81	136	106	100	251	253		64	2	—
	60	1720	496.048		1.81	1.81	136	108	100	256	257		66	2	—
			Vm = 48.610					Tm = 101.1 F							

*Record pressure differentials to 2 significant figures, e.g., 0.015, 0.88, 1.2, etc. Comments: _____

(continue on reverse, if necessary)

S-ETFD-1/93

6543

B-35

000097

INTERNATIONAL TECHNOLOGY CORPORATION

~~HF~~/HCl/~~Cl_2~~ TRAIN
SAMPLE RECOVERY AND INTEGRITY SHEET

Plant: Fermco
Sample location: Nitrification outlet
Run number: V-03
Filter type: TFE

Sample date: 9-14-94
Recovery date: 9-15-94
Recovered by: [illegible]

MOISTURE

Impingers	Condensate	1st	2nd	3rd	4th	5th
Contents	Empty	0.1N H_2SO_4	0.1N H_2SO_4	~~0.1N NaOH~~		Silica gel
Final wt/vol	X g	120 g	110 g	0 g	X g	217.8 g
Initial wt/vol	X g	100 g	100 g	6 g	X g	200 g
Net Gain	X g	20 g	10 g	0 g	X g	17.8 g

Description of impinger water: Clear

Total moisture: 47.8 g (Dried)

RECOVERED SAMPLE

	Sample solution/rinse container numbers	Sealed/liquid level marked
0.1N H_2SO_4 solution and DI water rinse	470 A	✓
~~0.1N NaOH~~ solution and DI water rinse	—	—
H_2O	~~382A~~ 473A	✓
0.1N H_2SO_4	472 A	✓

Samples stored and locked: _____
Remarks: _____

000098

INTERNATIONAL TECHNOLOGY CORPORATION

Emission Testing Field Data

Plant and City	Date	Sampling Location	Sample Type	Run Number
Ferrmco Fernelay	8/8/94	Vitrification outlet	SO_2	V-S-1A

Operator(s)	Bar. Press. (in. Hg)	Static Press. (in. H_2O)	Amb. Temp. (°F)	Filter Number(s)	Probe Length and Type	Nozzle Dia. (in.)	Nozzle Number
GT, BG	29.70	-.1	72	NA	3' Glass	NA	—

Moisture (%)	Meter Box No.	Meter ΔH@	Meter Cal. Factor (Y)	K Factor	Probe Heat (°F)	Box Heat (°F)	Therm. No.	Pitot No.	Imp. Therm. No.	Gas Bag Pump No.	Gas Bag Sys. Leak Check	Train Leak Check (initial) in. Hg	Train Leak Check (initial) CFM	Train Leak Check (final) in. Hg	Train Leak Check (final) CFM	Pitot Leak Check initial	Pitot Leak Check final
~5	FT-5	1.34	.946	—	250	-	-	—	I-1	—	—	10	.001	15	.000	-	—

Traverse Point No.	Sampling Time (min.)	Clock Time (24-hr)	Gas Meter Reading (Vm), ft^3	Velocity Head* (ΔP), in. H_2O	Orifice Pressure Differential (ΔH), in. H_2O* Desired	Orifice Pressure Differential Actual	Temperature (°F) Stack (T_s)	Dry Gas Meter Inlet (T_{mi})	Dry Gas Meter Outlet (T_{mo})	Probe	Sample Box	Resin	Impinger	Pump Vac. (in. Hg)	Gas Bag Sample Data
	0	10:00	696.150												
1	5		700.0		1.34	1.34	115	72	72	250	NA	NA	64	2	NA
	10		703.9		1.34	1.34	115	72	72	245			64	2	
	15		707.8		1.34	1.34	115	78	74	250			67	2	
	20	1020	712.143		1.34	1.34	115	79	75	251			62	2	
			V_m = 15.993		ΔH = 1.34			T_m = 74.2							

*Record pressure differentials to 2 significant figures, e.g., 0.015, 0.88, 1.2, etc. Comments:

(continue on reverse, if necessary)

S-ETFD-1/93

B-37

000099

0543

SO_2 TRAIN SAMPLE RECOVERY AND INTEGRITY SHEET

Plant Fernico Sample date 8/8/94

Sample location Melter Recovery date 8/8/94

Run number V-SO2-1A Recovered by B Gunls

MOISTURE

	1st impinger	2nd impinger	3rd impinger	Silica gel
Final wt	68 ml g	129 g	103 g	211.2 g
Initial wt	100 ml g	100 ml g	100 ml g	200 g
Net wt	-32 ml g	29 . g	3 ml g	11.2 g

302.4
91.2
211.2

Total moisture 11.2 g

RECOVERED SAMPLE

H_2O_2 blank container no. 394A Liquid level marked ✓

Impinger contents container no. 387A Liquid level marked ✓

H_2O blank container no. 382A Liquid level marked ✓

Samples stored and locked

Remarks

LABORATORY CUSTODY

Received by Date

Remarks

INTERNATIONAL TECHNOLOGY CORPORATION

Emission Testing Field Data

Plant and City	Date	Sampling Location	Sample Type	Run Number
Fernco Fernwalch	8/18/94	Vitrification Outlet	SO_2	V-S-1B

Operator(s)	Bar. Press. (in. Hg)	Static Press. (in. H_2O)	Amb. Temp. (°F)	Filter Number(s)	Probe Length and Type	Nozzle Dia. (in.)	Nozzle Number
CTB6	29.70	-.1	74.	NA	3' Glass	NA	

Moisture (%)	Meter Box No.	Meter ΔH@	Meter Cal. Factor (Y)	K Factor	Probe Heat (°F)	Box Heat (°F)	Therm. No.	Pitot No.	Imp. Therm. No.	Gas Bag Pump No.	Gas Bag Sys. Leak Check	Train Leak Check (initial) in. Hg	Train Leak Check (initial) CFM	Train Leak Check (final) in. Hg	Train Leak Check (final) CFM	Pitot Leak Check initial	Pitot Leak Check final
5.	FT-5	1.34	.946	—	250	—	—	—	I-1	—	—	15.	.001	10.	.000		

Traverse Point No.	Sampling Time (min.)	Clock Time (24-hr)	Gas Meter Reading (Vm), ft^3	Velocity Head* (ΔP), in. H_2O	Orifice Pressure Differential (ΔH), in. H_2O* Desired	Actual	Temperature (°F) Stack (T_s)	Dry Gas Meter Inlet (T_{mi})	Dry Gas Meter Outlet (T_{mo})	Probe	Sample Box	Resin	Impinger	Pump Vac. (in. Hg)	Gas Bag Sample Data
	0	10:30	712.280		1.34	1.34	118.	80.	76.	251.	NA.	NA.	62	2.	NA
	5.		716.6		1.34	1.34	118	84	76	252			61	2	
	10		720.00		1.34	1.34	118	86	78	254			61	2	
	15		723.9		1.34	1.34	118	86	78	257			60	2	
	20	1050	727.892												
			V_m=15.612		ΔH=1.34			T_m=80.5							

*Record pressure differentials to 2 significant figures, e.g., 0.015, 0.88, 1.2, etc. Comments: (continue on reverse, if necessary)

S-ETFD-1/93

6543

B-39

000101

SO_2 TRAIN SAMPLE RECOVERY AND INTEGRITY SHEET

Plant Fermco Sample date 8/8/94

Sample location Melter Recovery date 8/8/94

Run number V-SO2-13 Recovered by BGarls

MOISTURE

	1st impinger	2nd impinger	3rd impinger	Silica gel
Final wt	66 ml g	114 ml g	124 ml g	211.9 g
Initial wt	100 ml g	100 ml g	100 ml g	200 g
Net wt	-34 ml g	14 ml g	24 ml g	11.9 g

303.1
91.2

Total moisture 15.9 g

RECOVERED SAMPLE

H_2O_2 blank container no. 394A Liquid level marked ✓

Impinger contents container no. 388A Liquid level marked ✓

H_2O blank container no. 382A Liquid level marked ✓

Samples stored and locked

Remarks

LABORATORY CUSTODY

Received by Date

Remarks

000102

INTERNATIONAL TECHNOLOGY CORPORATION

Emission Testing Field Data

Plant and City	Date	Sampling Location	Sample Type	Run Number
Fernald	/ /	Vitrification Outlet	SO_2	V-S-[redacted]2A

Operator(s)	Bar. Press. (in. Hg)	Static Press. (in. H_2O)	Amb. Temp. (°F)	Filter Number(s)	Probe Length and Type	Nozzle Dia. (in.)	Nozzle Number
GTBG	29.70	-.1	74.	—	3' Glass	—	—

Moisture (%)	Meter Box No.	Meter ΔH @	Meter Cal. Factor (Y)	K Factor	Probe Heat (°F)	Box Heat (°F)	Therm. No.	Pitot No.	Imp. Therm. No.	Gas Bag Pump No.	Gas Bag Sys. Leak Check	Train Leak Check (Initial) in. Hg	Train Leak Check (Initial) CFM	Train Leak Check (final) in. Hg	Train Leak Check (final) CFM	Pitot Leak Check initial	Pitot Leak Check final
5.	Ft-5	1.34	.946	—	250	—	—	—	I-1	—	—	15.	.001	5.	—	—	—

Traverse Point No.	Sampling Time (min.)	Clock Time (24-hr)	Gas Meter Reading (Vm), ft^3	Velocity Head* (ΔP), in. H_2O	Orifice Pressure Differential (ΔH), in. H_2O* Desired	Actual	Temperature (°F) Stack (T_s)	Dry Gas Meter Inlet (T_{mi})	Dry Gas Meter Outlet (T_{mo})	Probe	Sample Box	Resin	Impinger	Pump Vac. (in. Hg)	Gas Bag Sample Data
	0	11:00	728.019												
	5.		732.3		1.34	1.34	118.	88.	80.	269.	—	Nl.	64.	2.	Nl
	10		735.8		1.34	1.34	118	88	80	270			63	2	
	15		740.2		1.34	1.34	118	88	80	258			62	2	
	20	1120	743.776		1.34	1.34	118	88	80	266			61	2	
			V_m=15.757		ΔH=1.34			T_m=84							

*Record pressure differentials to 2 significant figures, e.g., 0.015, 0.88, 1.2, etc. Comments:

(continue on reverse, if necessary)

S-ETFD-1/93

6543

B-41

000103

SO_2 TRAIN SAMPLE RECOVERY AND INTEGRITY SHEET

Plant Fermco Sample date 8/8/94

Sample location Melter Recovery date 8/8/94

Run number V-SO2-2A Recovered by B Gearls

MOISTURE

	1st impinger	2nd impinger	3rd impinger	Silica gel
Final wt	60 ml g	108 ml g	109 ml g	213.4 g
Initial wt	100 ml g	100 ml g	100 ml g	200 g
Net wt	-40 ml g	8 ml g	9 ml g	13.4 g

Total moisture -9.6 g

304.7
91.3

RECOVERED SAMPLE

H_2O_2 blank container no. 394A Liquid level marked ✓

Impinger contents container no. 389A Liquid level marked ✓

H_2O blank container no. 382A Liquid level marked ✓

Samples stored and locked

Remarks

LABORATORY CUSTODY

Received by Date

Remarks

INTERNATIONAL TECHNOLOGY CORPORATION

Emission Testing Field Data

Plant and City	Date	Sampling Location	Sample Type	Run Number
Fernald Fernald	8 18 94	Vitrification outlet	SO_2	V-S-[illegible]2B

Operator(s)	Bar. Press. (in. Hg)	Static Press. (in. H_2O)	Amb. Temp. (°F)	Filter Number(s)	Probe Length and Type	Nozzle Dia. (in.)	Nozzle Number
CT, BG	29.70	-.1	78	—	3' Glass	—	—

Moisture (%)	Meter Box No.	Meter ΔH@	Meter Cal. Factor (Y)	K Factor	Probe Heat (°F)	Box Heat (°F)	Therm. No.	Pitot No.	Imp. Therm. No.	Gas Bag Pump No.	Gas Bag Sys. Leak Check	Train Leak Check (initial) in. Hg	Train Leak Check (initial) CFM	Train Leak Check (final) in. Hg	Train Leak Check (final) CFM	Pitot Leak Check initial	Pitot Leak Check final
~5.	FT-5	1.34	.946	—	250	—	—	—	I-1	—	—	15.	.001	7.	.002	—	—

Traverse Point No.	Sampling Time (min.)	Clock Time (24-hr)	Gas Meter Reading (Vm), ft^3	Velocity Head* (ΔP), in. H_2O	Orifice Pressure Differential (ΔH), in. H_2O* Desired	Orifice Pressure Differential (ΔH), in. H_2O* Actual	Temperature (°F) Stack (T_s)	Temperature (°F) Dry Gas Meter Inlet (T_{mi})	Temperature (°F) Dry Gas Meter Outlet (T_{mo})	Temperature (°F) Probe	Temperature (°F) Sample Box	Temperature (°F) Resin	Temperature (°F) Impinger	Pump Vac. (in. Hg)	Gas Bag Sample Data
	0	11:30	743.897												
	5.		747.9		1.34	1.34	119.	94.	84.	265.	—	—	66.	2.	—
	10		751.9		1.34	1.34	119	94	84	235			66	2	
	15		755.8		1.34	1.34	119	96	84	240			66	2	
	20	1150	759.788		1.34	1.34	119	96	84	251			66	2	
			V_m=15.891		ΔH=1.34			T_m=89.5							

*Record pressure differentials to 2 significant figures, e.g., 0.015, 0.88, 1.2, etc. Comments:

(continue on reverse, if necessary)

S-ETFD-1/93

B-43

000105

6543

SO_2 TRAIN SAMPLE RECOVERY AND INTEGRITY SHEET

Plant Fernco Sample date 8/8/94

Sample location Melter Recovery date 8/8/94

Run number V-SO2-2B Recovered by BGarls

MOISTURE

	1st impinger	2nd impinger	3rd impinger	Silica gel
Final wt	68 ml g	118 ml g	106 ml g	211.5 g
Initial wt	100 ml g	100 ml g	100 ml g	200 g
Net wt	-32 ml g	18 ml g	6 ml g	11.5 g

302.8
91.3
211.5

Total moisture 3.5 g

RECOVERED SAMPLE

H_2O_2 blank container no. 394A Liquid level marked ✓

Impinger contents container no. 390A Liquid level marked ✓

H_2O blank container no. 382A Liquid level marked ✓

Samples stored and locked

Remarks

LABORATORY CUSTODY

Received by Date

Remarks

INTERNATIONAL TECHNOLOGY CORPORATION

Emission Testing Field Data

Plant and City	Date	Sampling Location	Sample Type	Run Number
Fernald	8/8/94	Vitrification outlet	SO_2	V-S-3A

Operator(s)	Bar. Press. (in. Hg)	Static Press. (in. H_2O)	Amb. Temp. (°F)	Filter Number(s)	Probe Length and Type	Nozzle Dia. (in.)	Nozzle Number
GT BG	29.70	-.1	78.	—	3' Glass	—	—

Moisture (%)	Meter Box No.	Meter ΔH@	Meter Cal. Factor (Y)	K Factor	Probe Heat (°F)	Box Heat (°F)	Therm. No.	Pitot No.	Imp. Therm. No.	Gas Bag Pump No.	Gas Bag Sys. Leak Check	Train Leak Check (initial) in. Hg	Train Leak Check (initial) CFM	Train Leak Check (final) in. Hg	Train Leak Check (final) CFM	Pitot Leak Check initial	Pitot Leak Check final
5.	FT-5	1.34	.946	—	250	—	—	—	I-1	—	—	15.	.002	10.	.000	—	—

Traverse Point No.	Sampling Time (min.)	Clock Time (24-hr)	Gas Meter Reading (Vm), ft^3	Velocity Head* (ΔP), in. H_2O	Orifice Pressure Differential (ΔH), in. H_2O* Desired	Actual	Temperature (°F) Stack (T_s)	Dry Gas Meter Inlet (T_{mi})	Dry Gas Meter Outlet (T_{mo})	Probe	Sample Box	Resin	Impinger	Pump Vac. (in. Hg)	Gas Bag Sample Data
	0	12:15	759.919												
1	5.		764.1		1.34	1.34	118.	90.	88.	244.	—	—	66.	2	
	10		767.9		1.34	1.34	122	90	88	244			66	2	
	15		771.9		1.34	1.34	123	94	88	248			66	2	
	20	12:35	775.908		1.34	1.34	124	98	88	253			66	2	
			V_m = 15.989		ΔH = 1.34			T_m = 90.5							

*Record pressure differentials to 2 significant figures, e.g., 0.015, 0.88, 1.2, etc. Comments: _____ (continue on reverse, if necessary)

S-ETFD-1/93

6543

B-45

000107

SO_2 TRAIN SAMPLE RECOVERY AND INTEGRITY SHEET

Plant Fermco Sample date 8/8/94

Sample location Melter Recovery date 8/8/94

Run number V-SO2-3A Recovered by BGarls

MOISTURE

	1st impinger	2nd impinger	3rd impinger	Silica gel
Final wt	76 ml g	109 ml g	102 ml g	156.1 g
Initial wt	100 ml g	100 ml g	100 ml g	~~260~~ 150 g
Net wt	-24 ml g	9 ml g	2 ml g	0.1 g

261.3
91.2

Total moisture -12.9 g

RECOVERED SAMPLE

H_2O_2 blank container no. 394A Liquid level marked ✓

Impinger contents container no. 391A Liquid level marked ✓

H_2O blank container no. 382A Liquid level marked ✓

Samples stored and locked

Remarks

LABORATORY CUSTODY

Received by Date

Remarks

INTERNATIONAL TECHNOLOGY CORPORATION

Emission Testing Field Data

Plant and City	Date	Sampling Location	Sample Type	Run Number
Fernco Fernwood	8/18/94	Vitrification Offgas	SO_2	V-S-3B

Operator(s)	Bar. Press. (in. Hg)	Static Press. (in. H_2O)	Amb. Temp. (°F)	Filter Number(s)	Probe Length and Type	Nozzle Dia. (in.)	Nozzle Number
GT BG	29.70	-1	76	—	3' Glass	—	—

Moisture (%)	Meter Box No.	Meter ΔH@	Meter Cal. Factor (Y)	K Factor	Probe Heat (°F)	Box Heat (°F)	Therm. No.	Pitot No.	Imp. Therm. No.	Gas Bag Pump No.	Gas Bag Sys. Leak Check	Train Leak Check (initial) in. Hg	Train Leak Check (initial) CFM	Train Leak Check (final) in. Hg	Train Leak Check (final) CFM	Pitot Leak Check initial	Pitot Leak Check final
-5.	FT-5	1.34	.946	—	250	—	·	—	I-1	—	—	15.	.001	5.	—	—	—

Traverse Point No.	Sampling Time (min.)	Clock Time (24-hr)	Gas Meter Reading (Vm), ft^3	Velocity Head* (ΔP), in. H_2O	Orifice Pressure Differential (ΔH), in. H_2O* Desired	Orifice Pressure Differential (ΔH), in. H_2O* Actual	Temperature (°F) Stack (T_s)	Dry Gas Meter Inlet (T_{mi})	Dry Gas Meter Outlet (T_{mo})	Probe	Sample Box	Resin	Impinger	Pump Vac. (in. Hg)	Gas Bag Sample Data
	0	12:45	776.099												
	5.		780.0		1.34	1.34	124.	96.	90.	265.	—	—	66.	2.	—
	10		784.0		1.34	1.34	125	98	90	237			66	2	
	15		788.0		1.34	1.34	125	99	90	237			66	2	
	20	13:05	792.029		1.34	1.34	125	102	90	248			66	2	
			V_m = 15.930		ΔH = 1.34			T_m = 94.4							

*Record pressure differentials to 2 significant figures, e.g., 0.015, 0.88, 1.2, etc. Comments:

(continue on reverse, if necessary)

S-ETFD-1/93

B-47

000109

6543

SO_2 TRAIN SAMPLE RECOVERY AND INTEGRITY SHEET

Plant Fernco Sample date 8/8/94

Sample location Melter Recovery date 8/8/94

Run number V-SO2-3B Recovered by Bearls

MOISTURE

	1st impinger	2nd impinger	3rd impinger	Silica gel	
Final wt	89 ml ~~g~~	98 ml ~~g~~	106 ml ~~g~~	204.1 g	295.3
Initial wt	100 ml ~~g~~	100 ml ~~g~~	100 ml ~~g~~	200 g	91.2
Net wt	-11 ml ~~g~~	-2 ml ~~g~~	6 ml ~~g~~	4.4 g	

Total moisture -2.6 g

RECOVERED SAMPLE

H_2O_2 blank container no. 394A Liquid level marked ✓

Impinger contents container no. 392A Liquid level marked ✓

H_2O blank container no. 382A Liquid level marked ✓

Samples stored and locked

Remarks

LABORATORY CUSTODY

Received by Date

Remarks

NITROGEN OXIDE FIELD DATA SHEET

PLANT: Fernco

SAMPLE LOCATION: Melter Stack

OPERATOR: B Gearls

REAGENT VOLUME: 25ml

CITY: Fernald

DATE: 8/4/94

INITIAL BAROMETRIC PRESSURE: 29.45 in. Hg

FINAL BAROMETRIC PRESSURE: 29.50 in. Hg

RUN NO.	SAMPLE TIME (24 hr.)	FLASK AND VALVE NO's	VOLUME OF FLASK AND VALVE, ml	FLASK TEMP. (INITIAL), ° F	INITIAL FLASK PRESSURE		FLASK TEMP. (FINAL) ° F	FINAL FLASK PRESSURE	
					LEG 1 in. Hg	LEG 2 in. Hg		LEG 1 in. Hg	LEG 2 in. Hg
V-NOx-1A	0943	10KB	1951.6	88	13.8	13.1	67	1.5	1.5
1B	0958	KP	2009.5	88	13.6	13.0	67	2.0	2.0
1C	1015	1HD	2018.5	88	13.6	13.0	67	3.0	3.0
1D	1030	CC	2058.9	88	13.6	13.0	67	2.5	2.5
V-NOx-2A	1202	WW	2038.0	93	13.5	13.5	67	3.0	3.0
2B	1217	6KB	1979.3	93	13.4	13.4	67	3.0	3.0
2C	1232	TG	2078.5	93	13.2	13.2	67	.2	.2
2D	1247	ZA	2094.8	93	13.5	13.5	67	3.0	3.0
V-NOx-3A	1335	FU	2079.3	92	13.1	13.1	67	.5	.5
3B	1350	XC	2071.6	92	13.1	13.1	67	1.5	1.5
3C	1405	JQ	2027.4	92	13.0	13.0	67	1.5	1.5
3D	1420	9F	2012.8	92	13.03	13.03	67	1.0	1.0

VOC CALIBRATION DATA

Inst. No.	Screening team	Date	Time	Zero setting	Instrument readings: Low cal. std. conc. 100 ppm	Instrument readings: High cal. std. conc. ____ ppm
57849	BG, GT	8/4/94	1545	2 ppm	100 ppm	
			1550	2.5 ppm	100 ppm	

Comments: _____

VOC EMISSIONS DATA

Plant Fernco City Fernald

Screening Personnel BG, ET Instrument ID OVA 108

Process Unit Melter (Plant 9) Date 8/4/94

Run No.	Time	Concentration, ppm
V-THC-3	1323-1426	9.5
V-THC-2	1152-1255	9.0
V-THC-1	0935-1035	9.5

CO CALIBRATION DATA

Inst. No.	Screening team	Date	Time	Zero setting	Instrument readings: Low cal. std. conc. 29.9 ppm	Instrument readings: High cal. std. conc. ____ ppm
01724	BG, GT	8/4/94	1453	-13 (0)	15 (28ppm 6.4%)	
		8/4/94	1515	-13 (0)	15 (28ppm 6.4%)	

Comments: _____

000114

CO EMISSIONS DATA

Plant Fermco

City Fernald, OH

Screening Personnel BG, GT

Instrument ID 01724

Process Unit Melter

Date 8/4/94

Run No.	Time	Concentration, ppm
V-CO-1	935-1035	-1 (12ppm)
V-CO-2	1152-1255	-5 (8ppm)
V-CO-3	1323-1426	-2 (11ppm)

APPENDIX C

LABORATORY DATA

	Page
Particulate/Metals	C-2
Radionuclides	C-16
HCl and Total Fluorides	C-67
SO_2	C-72
NO_x	C-76

Quanterra Environmental Services

Quanterra Incorporated
5815 Middlebrook Pike
Knoxville, Tennessee 37921

615 588-6401 Telephone
615 584-4315 Fax

IT Air Quality Services
11499 Chester Road
Cincinnati, OH 45246
Attn: Dave Osterhout

November 3, 1994

Job Number: 1501

This is the Certificate of Analysis for the following samples:

Client Project ID:	FERMCO/332331
Date Received by Lab:	August 18, 1994
Number of Samples:	Twenty-six (26)
Sample Type:	Air

I. Introduction

On August 18, 1994, twenty-six (26) air samples arrived at Quanterra Environmental Services, Knoxville, Tennessee from IT Air Quality Services, Cincinnati, Ohio. The list of analytical tests performed, as well as date of receipt and analysis, can be found in the attached report.

II. Analytical Results/Methodology

The analytical results for this report are presented by analytical test. Each set of data will include sample identification information and the analytical results.

The total particulate of the samples was determined based on EPA method 5.

Reviewed and Approved:

Kenneth Mueller
Project Manager

Quanterra Environmental Services

IT Air Quality Services
November 3, 1994

Client Project ID: FERMCO\332331

Job Number: 1501

II. Analytical Results/Methodology (continued)

The samples were analyzed for requested metals by cold vapor atomic absorption spectroscopy (CVAA), graphite furnace atomic absorption spectroscopy (GFAA) and inductively coupled argon plasma spectroscopy (ICP) based on EPA methods 7470 (Hg), 7421 (Pb), 7740 (Se), 7060 (As) and 6010 (ICP metals).

III. Quality Control

Routine laboratory level I QC was followed.

Method 5 Blank Analytical Data

Quanterra Environmental Services

Plant: FERMCO

Density of Acetone 0.7899 g/ml (pa)

Blank Type	Sample identifiable	Liquid level at mark and/or container sealed
Acetone	YES	YES
Filter	YES	YES

Acetone Blank Container No. 0384A

Lab #: AC 2185

Volume of Acetone: 138 ml. (Va)

Date & Time of Wt. 10/13/94 15:15

Date & Time of Wt. 10/14/94 09:20

Beaker Gross Wt.: 110034.1 mg.

Beaker Gross Wt.: 110034.5 mg.

Average Gross Wt.: 110034.3 mg.

Beaker Tare Wt.: 110034.5 mg.

Beaker Net Wt.: -0.2 mg.(ma)

Acetone Blank Value: -0.0018 mg/g (Ca)

$$Ca,(mg/g) = \frac{(ma)}{(Va)\ (pa)}$$

Blank Value used for Calculations: -0.0018 mg/g

Filter #: 9470020

Lab #: AC 2184

Date & Time of Wt. 10/12/94 08:30

Date & Time of Wt. 10/12/94 18:00

Filter Gross Wt.: 312.9 mg

Filter Gross Wt.: 312.8 mg

Average Gross Wt.: 312.9 mg

Filter Tare Wt.: 311.0 mg

Difference: 1.9 mg

Remarks

Signature of Analyst: Date:

Signature of Reviewer: Kenneth Mullen Date: 10/12/94

Method 5 Analytical Results

6543

Quanterra Environmental Services

Plant: FERMCO

Sample Location

Run No.: V-PM-1

Density of Acetone 0.7899 g/ml

Sample Type	Sample Identifiable	Liquid level at mark and/or container sealed
Acetone	YES	YES
Filter	YES	YES

Acetone Blank Residue Conc. 0.0000 mg/g

Lab #: AC 2161

Acetone Volume: 175 ml.

Date & Time of Wt. 10/13/94 15:15

Date & Time of Wt. 10/14/94 09:20

Beaker Gross Wt.: 102254.2 mg

Beaker Gross Wt.: 102254.7 mg

Average Gross Wt.: 102254.5 mg

Beaker Tare Wt.: 102241.1 mg

Less acetone blank wt.: 0.0 mg

Particulate Wt.: 13.4 mg

Filter # 9470019

Lab #: AC 2160

Date & Time of Wt. 10/12/94 08:30

Date & Time of Wt. 10/12/94 18:00

Filter Gross Wt.: 316.8 mg

Filter Gross Wt.: 316.8 mg

Average Gross Wt.: 316.8 mg

Filter Tare Wt.: 314.8 mg

Weight of Particulate on Filter: 2.0 mg

Weight of Particulate in Acetone Rinse: 13.4 mg

Total Wt. of Particulate: 15.4 mg

Signature of Analyst: _____ Date: _____

Signature of Reviewer: Kenneth Mueller Date: 11/2/94

Method 5 Analytical Results

Quanterra Environmental Services

Plant: FERMCO

Run No.: V-PM-2

Sample Location

Density of Acetone 0.7899 g/ml

Sample Type	Sample Identifiable	Liquid level at mark and/or container sealed
Acetone	YES	YES
Filter	YES	YES

Acetone Blank Residue Conc. 0.0000 mg/g

Lab #: AC 2169

Acetone Volume: 106 ml.

Date & Time of Wt. 10/13/94 15:15

Date & Time of Wt. 10/14/94 09:20

Beaker Gross Wt.: 103808.9 mg

Beaker Gross Wt.: 103809.2 mg

Average Gross Wt.: 103809.1 mg

Beaker Tare Wt.: 103806.5 mg

Less acetone blank wt.: 0.0 mg

Particulate Wt.: 2.6 mg

Filter # 9470018

Lab #: AC 2168

Date & Time of Wt. 10/12/94 08:30

Date & Time of Wt. 10/12/94 18:00

Filter Gross Wt.: 317.2 mg

Filter Gross Wt.: 317.1 mg

Average Gross Wt.: 317.2 mg

Filter Tare Wt.: 315.5 mg

Weight of Particulate on Filter: 1.7 mg

Weight of Particulate in Acetone Rinse: 2.6 mg

Total Wt. of Particulate: 4.3 mg

Signature of Analyst:

Date:

Signature of Reviewer: Kenneth Mueller

Date: 11/2/94

11/3/94

Method 5 Analytical Results

Quanterra Environmental Services

Plant: FERMCO

Sample Location

Run No.: V-PM-3

Density of Acetone 0.7899 g/ml

Sample Type	Sample Identifiable	Liquid level at mark and/or container sealed
Acetone	YES	YES
Filter	YES	YES

Acetone Blank Residue Conc. 0.0000 mg/g

Lab #: AC 2177

Acetone Volume: 187 ml.

Date & Time of Wt. 10/13/94 15:15

Date & Time of Wt. 10/14/94 09:20

Beaker Gross Wt.: 112368.7 mg

Beaker Gross Wt.: 112369.0 mg

Average Gross Wt.: 112368.9 mg

Beaker Tare Wt.: 112369.0 mg

Less acetone blank wt.: 0.0 mg

Particulate Wt.: 0.0 mg

Filter # 9470017

Lab #: AC 2176

Date & Time of Wt. 10/12/94 08:30

Date & Time of Wt. 10/12/94 18:00

Filter Gross Wt.: 310.6 mg

Filter Gross Wt.: 310.7 mg

Average Gross Wt.: 310.7 mg

Filter Tare Wt.: 308.6 mg

Weight of Particulate on Filter: 2.1 mg

Weight of Particulate in Acetone Rinse: 0.0 mg

Total Wt. of Particulate: 2.1 mg

Signature of Analyst: _____ Date: _____

Signature of Reviewer: Kenneth Mueller Date: 11/2/94

IT Air Quality Services
November 3, 1994

Quanterra Environmental Services

Client Project ID: FERMCO\332331

Job Number: 1501

METALS ANALYSIS

Results in total μg

Sample Matrix: Air

Client Sample ID:	Method Blank		COMPOSITE V-PM-FB	
Lab Sample ID:	PBF101A		AC2155	
arsenic	5.00	U	5.00	U
barium	1.00	U	2.50	+
beryllium	0.500	U	0.500	U
cadmium	2.50	U	2.50	U
chromium	5.00	U	5.00	U
lead	1.00	U	1.00	U
mercury	0.100	U	0.200	U
selenium	1.00	U	3.00	+
silver	2.50	U	2.50	U

Digestion Date: 10/18/94
Analysis Date: 10/21/94 (ICP), 10/19/94 (CVAA)

+ - Positive result.
U - Compound was analyzed for but not detected. The number is the detection limit for the sample.

IT Air Quality Services
November 3, 1994

Quanterra Environmental Services 6543

Client Project ID: FERMCO\332331

Job Number: 1501

METALS ANALYSIS

Results in total μg

Sample Matrix: Air

Client Sample ID:	COMPOSITE V-PM-1		COMPOSITE V-PM-2		COMPOSITE V-PM-3	
Lab Sample ID:	AC2164		AC2172		AC2180	
arsenic	5.00	U	5.00	U	5.00	U
barium	3.00	+	2.50	+	3.00	+
beryllium	0.500	U	0.500	U	0.500	U
cadmium	2.50	U	2.50	U	2.50	U
chromium	5.00	U	5.00	U	5.00	U
lead	1.00	+	1.50	+	1.50	+
mercury	0.200	U	0.200	U	0.200	U
selenium	10.0	+	1.00	U	1.00	U
silver	2.50	U	2.50	U	2.50	U

Digestion Date: 10/18/94
Analysis Date: 10/21/94 (ICP), 10/19/94 (CVAA)

+ - Positive result.
U - Compound was analyzed for but not detected. The number is the detection limit for the sample.

IT Air Quality Services
November 3, 1994

Quanterra Environmental Services

Client Project ID: FERMCO\332331

Job Number: 1501

METALS ANALYSIS

Results in total μg

Sample Matrix: Air

Client Sample ID:	METHOD BLANK	V-PM-FB HCL	V-PM-FB KMN04/H2S04
Lab Sample ID:	CPBW1018	AC2156	AC2157
mercury	0.020 U	1.28 +	2.52 +

Total V-PM-F 3,P

Analysis Date: 10/18/94

+ - Positive result.
U - Compound was analyzed for but not detected. The number is the detection limit for the sample.

Quanterra Environmental Services

IT Air Quality Services
November 3, 1994

Client Project ID: FERMCO\332331

Job Number: 1501

METALS ANALYSIS

Results in total μg

Sample Matrix: Air

Client Sample ID:	V-PM-1 HCL	V-PM-1 KMN04/H2S04		V-PM-2 HCL
Lab Sample ID:	AC2165	AC2166	Total V-PM-1	AC2173
mercury	0.337 +	6.37 +	6.7	0.570 +

Analysis Date: 10/18/94

\+ - Positive result.
U - Compound was analyzed for but not detected. The number is the detection limit for the sample.

IT Air Quality Services
November 3, 1994

Quanterra Environmental Services

Client Project ID: FERMCO\332331

Job Number: 1501

METALS ANALYSIS

Results in total μg

Sample Matrix: Air

Client Sample ID:	V-PM-2 KMN04/H2S04			V-PM-3 HCL		V-PM-3 KMN04/H2S04		
Lab Sample ID:	AC2174		Total V-PM-2	AC2181		AC2182		Total V-PM-3
mercury	8.35	+	8.9	0.074	U	1.44	+	1.4

Analysis Date: 10/19/94

\+ - Positive result.
U - Compound was analyzed for but not detected. The number is the detection limit for the sample.

Quanterra Environmental Services

IT Air Quality Services
November 3, 1994

Client Project ID: FERMCO\332331

Job Number: 1501

METALS ANALYSIS

Results in total μg

Sample Matrix: Air

Client Sample ID:	METHOD BLANK	0381 A KMN04/H2S04
Lab Sample ID:	CPBW1019A	AC2189
mercury	0.020 U	0.074 +

Analysis Date: 10/18/94

+ - Positive result.
U - Compound was analyzed for but not detected. The number is the detection limit for the sample.

INTERNATIONAL TECHNOLOGY CORPORATION

COC NO. *0000683*

ANALYSIS REQUEST AND CHAIN OF CUSTODY RECORD

WO #1501 Rl # 1811

Reference Document No. 419366

Page 1 of 2

Project Name/No. [1] FERMCO/332331

Sample Team Members [2] Thress/Geals

Profit Center No. [3] 3572

Project Manager [4] Osterhout

Purchase Order No. [6]

Required Report Date [11]

Samples Shipment Date [7]

Lab Destination [8]

Lab Contact [9]

Project Contact/Phone [12] Osterhout 513-782-4700

Carrier/Waybill No. [13]

Bill to: [5]

Report to: [10] Dave Osterhout IT-Cincinnati

ONE CONTAINER PER LINE

Sample Number [14]	Sample Description/Type [15]	Date/Time Collected [16]	Container Type [17]	Sample Volume [18]	Preservative [19]	Requested Testing Program [20]	Condition on Receipt [21]	Disposal Record No. [22]
458B	Filter	8/8/94	Petri	—	None	For Runs V-PMM-FB 1, 2 + 3:		
454A (Run V-PMM-FB)	Acetone		Glass			Filters - desiccate + weigh		EPA 5
459A	HNO_3/H_2O_2		Poly			Acetones - evaporate, desiccate, + weigh		
458A	$KMnO_4/H_2SO_4$		Glass			Following EPA 5 analysis:		
456A	HCl		Poly			- analyze for metals per BFF Sec. 3.1		
386B (Run V-PMM-1)	Filter		Petri	—		For each run - digest filter, acetone residue, + HNO_3/H_2O_2; combine digestates + analyze for		
491A	Acetone		Glass			As, Pb, Se by AA, Ba, Be, Cd, Cr, Ni by ICP		
492A	HNO_3/H_2O_2		Poly			and Hg by CVAA. - analyze $KMnO_4/H_2SO_4$ for Hg by CVAA - analyze HCl for Hg by CVAA		

Special Instructions: [23]

Possible Hazard Identification: [24] Acetone - HNO_3/H_2O_2, $KMnO_4/H_2SO_4$, HCl

Non-hazard ☐ Flammable ☒ Skin Irritant ☒ Poison/B ☐ Unknown ☐

Sample Disposal: [25] Return to Client ☐ Disposal by Lab ☒ Archive ____ (mos.)

Turnaround Time Required: [26] Normal ☐ Rush ☐

QC Level: [27] I. ☐ II. ☐ III. ☐ Project Specific (specify):

1. Relinquished by [28] (Signature/Affiliation) Gary Thress IT — Date: 8/10/94 Time: 1050	1. Received by [28] (Signature/Affiliation) Tim Miller FERMCO — Date: 8/10/94 Time: 1050
2. Relinquished by (Signature/Affiliation) Tim Miller FERMCO — Date: 8/10/94 Time: 1300	2. Received by (Signature/Affiliation) Bryan Blomquist QESKM — Date: 8/18/94 Time: 9:20
3. Relinquished by (Signature/Affiliation) — Date: Time:	3. Received by (Signature/Affiliation) — Date: Time:

Comments: [29]

000129

INTERNATIONAL TECHNOLOGY CORPORATION

ANALYSIS REQUEST AND CHAIN OF CUSTODY RECORD (cont.)*

Reference Document No.[30] 419366

Page 2 of 2

Project Name FERMCO

Project No. 332331

Samples Shipment Date 5/16/94 1300

ONE CONTAINER PER LINE

Sample[14] Number	Sample[15] Description/Type	Date/Time[16] Collected	Container[17] Type	Sample[18] Volume	Pre-[19] servative	Requested Testing[20] Program	Condition on[21] Receipt	Disposal[22] Record No.
385A (Run V-7M-1 cont)	$KMnO_4/H_2SO_4$	5/8/94	Glass		None			
386A	HCl		Poly					
0407B	Filter		Petri	—				
0407A (Run V-7M-2)	Acetone		Glass					
400A	HNO_3/H_2O_2		Poly					
401A	$KMnO_4/H_2SO_4$		Glass					
402A	HCl		Poly					
404B	Filter		Petri	—				
403A (Run V-7M-3)	Acetone		Glass					
404A	HNO_3/H_2O_2		Poly					
405A	$KMnO_4/H_2SO_4$		Glass					
406A	HCl		Poly					
0456B (Blanks)	Filter		Petri	—		For Blanks: Filter - desiccate + weigh		
0384A	Acetone		Glass			Acetone - evaporate, desiccate, + weigh		
0455B (QA Check)	Filter		Petri	—		For QA checks		
0490B	Filter		Petri	—		- filters - desiccate + weigh		
0403B	Filter		Petri	—				
3381A	$KMnO_4$ (10%) H_2SO_4		Glass	—				

White: To accompany samples
Yellow: Field copy
*See back of form for special instructions.

C-15

0001130

6543

MCA 3/15/91

Quanterra Environmental Services

Quanterra Incorporated
5815 Middlebrook Pike
Knoxville, Tennessee 37921

615 588-6401 Telephone
615 584-4315 Fax

IT Air Quality Services
11499 Chester Road
Cincinnati, OH 45246
Attn: Dave Osterhout

November 16, 1994

Job Number: 1498

This is the Certificate of Analysis for the following samples:

Client Project ID:	FERMCO/332331
Date Received by Lab:	August 18, 1994
Number of Samples:	Twelve (12)
Sample Type:	Liquid - eight (8); Filter - four (4)

I. Introduction

On August 18, 1994, eight (8) liquid samples and four (4) filter samples arrived at Quanterra Environmental Services, Knoxville, Tennessee, from IT Air Quality Services, Cincinnati, Ohio. The list of analytical tests performed, as well as date of receipt and analysis, can be found in the attached report.

II. Analytical Results/Methodology

The analytical results for this report are presented by analytical test. Each set of data will include sample identification information and the analytical results.

The samples were transferred to Quanterra Environmental Services St. Louis laboratory for radiochemical analyses. A copy of their report is attached.

Reviewed and Approved:

Kenneth Mueller
Project Manager

III. Quality Control

Table I is a cross reference between client sample IDs and laboratory sample IDs.

Table I

Client Sample ID	Knoxville Lab Sample ID	St. Louis Lab Sample ID
V-R-1 Filter Run 1 380B	AC1411	6363-001
V-R-1 Acetone Run 1 380A	AC1412	6363-005
V-R-1 H_2O Run 1 383A	AC1413	"
V-R-2 Filter Run 2 487B	AC1415	6363-002
V-R-2 Acetone Run 2 487A	AC1416	6363-006
V-R-2 H_2O Run 2 488A	AC1417	"
V-R-3 Filter Run 3 489B	AC1419	6363-003
V-R-3 Acetone Run 3 489A	AC1420	6363-007
V-R-3 H_2O Run 3 490A	AC1421	"
Blank Filter 459B	AC1423	6363-004
Blank Acetone 384A	AC1424	6363-008
Blank H_2O 382A	AC1425	"

COC NO. 0000681

INTERNATIONAL TECHNOLOGY CORPORATION

ANALYSIS REQUEST AND CHAIN OF CUSTODY RECORD

WO #14998 RL# 1805

Reference Document No. 41936

Page 1 of 2

Project Name/No. [1] FERMCo/332331

Sample Team Members [2] Thress, Carls

Profit Center No. [3] 3572

Project Manager [4] Osterhout

Purchase Order No. [6]

Required Report Date [11]

Samples Shipment Date [7]

Lab Destination [8]

Lab Contact [9]

Project Contact/Phone [12] Osterhout 513-782-4700

Carrier/Waybill No. [13]

Bill to: [5]

Report to: [10] Dave Osterhout IT-Cincinnati

ONE CONTAINER PER LINE

Sample Number [14]	Sample Description/Type [15]	Date/Time Collected [16]	Container Type [17]	Sample Volume [18]	Preservative [19]	Requested Testing Program [20]	Condition on Receipt [21]	Disposal Record No. [22]
380B (Run V-R-1)	Filter	8/4/94	Petri	—	None	For each run:		
380A	Acetone		Glass			Combine fractions & analyze for:		
383A	H_2O		Poly					
487B (Run V-R-7)	Filter		Petri	—		- total activity		
487A	Acetone		Glass			- gross alpha by gas flow proportional counter		
488A	H_2O		Poly			- gross beta " " " "		
						- gamma by gamma spectroscopy		
						- total uranium by laser phosphorimetry		

Special Instructions: [23]

Possible Hazard Identification: [24] Non-hazard ☒ Flammable ☐ Skin Irritant ☐ Poison B ☐ Unknown ☐

Sample Disposal: [25] Return to Client ☐ Disposal by Lab ☒ Archive ____ (mos.)

Turnaround Time Required: [26] Normal ☐ Rush ☐

QC Level: [27] I. ☐ II. ☐ III. ☐ Project Specific (specify):

1. Relinquished by [28] (Signature/Affiliation) Gary Thress IT	Date: 8/10/94 Time: 1050	1. Received by [28] (Signature/Affiliation) Tim Miller FERMCO	Date: 8-10-94 Time: 1050
2. Relinquished by (Signature/Affiliation) Tim Miller FERMCO	Date: 8/14/94 Time: 1300	2. Received by (Signature/Affiliation) Bryan Blomquist DESKN	Date: 8/18/94 Time: 9:20
3. Relinquished by (Signature/Affiliation)	Date: Time:	3. Received by (Signature/Affiliation)	Date: Time:

Comments: [29] 195 3628 887 = 25°C RL 1805 = 22°C

000133

C-18

INTERNATIONAL TECHNOLOGY CORPORATION

ANALYSIS REQUEST AND CHAIN OF CUSTODY RECORD (cont.)*

Reference Document No 4192-T

Page 2 of 2

Project Name FERMCo

Project No. 332331

Samples Shipment Date 8/14

Tan Pinco

ONE CONTAINER PER LINE

Sample Number 14	Sample Description/Type 15	Date/Time Collected 16	Container Type 17	Sample Volume 18	Preservative 19	Requested Testing Program 20	Condition on Receipt 21	Disposal Record No. 22
489B (Run VR3)	Filter	8/4/84	Petri	—	None			
489A	Acetone		Glass					
490A	H_2O		Poly					
459B (Blanks)	Filter		Petri	—				
384A	Acetone		Glass					
382A	H_2O		Poly					

White: To accompany samples
Yellow: Field copy
*See back of form for special instructions

6543

MCA 3/15/91

C-19

000134

Quanterra Environmental Services

Quanterra Incorporated
13715 Rider Trail North
Earth City, Missouri 63045

314 298-8566 Telephone
314 298-8757 Fax

CERTIFICATE OF ANALYSIS

Quanterra
5815 Middlebrook Pike
Knoxville, TN 37921

ATTENTION: Ken Mueller

October 14, 1994

PROJECT NUMBER:	552.03
DATE RECEIVED:	October 3, 1994
NUMBER OF SAMPLES:	Eight (8)
SAMPLE MATRIX:	Four (4) Filter Four (4) Liquid

I. Introduction

On October 3, 1994, eight (8) samples were received at Quanterra Environmental Services at St. Louis from Quanterra at Middlebrook. The list of analytical tests performed, as well as receipt and analysis, can be found in the attached report. The samples were labeled as follows:

MIDDLEBROOK SAMPLE ID	ST. LOUIS SAMPLE ID
AC1411	6363-001
AC1415	6363-002
AC1419	6363-003
AC1423	6363-004
AC1412 & AC1413	6363-005
AC1416 & AC1417	6363-006
AC1420 & AC1421	6363-007
AC1424 & AC1425	6363-008

II. Analytical Results/Methodology

The analytical results for this report are presented by analytical tests. Each set of data will include sample identification information, the analytical results, and the appropriate detection limits.

The analyses requested include: Gross Alpha/Beta by standard method 7110, Gamma Isotopic by method HASL 300 4.5.2.3 for filters and EPA method 901.1 for liquids, and Total Uranium by KPA

III. Quality Control

The QA/QC information can be found immediately following the analytical data. This QA/QC data are used to assess the laboratory's accuracy and precision during the analytical procedure.

IV. Comments/Nonconformances

Total volumes of acetone and water were composited and analyzed for samples 6363-005, -006, -007, and -008. The samples composited are indicated in the introduction above.

PCI/FIL = picocuries per filter
PCI/L = picocuries per liter
ND = non detect
%REC = percent recovery

Gross Alpha/Beta

There are no comments or nonconformances associated with this analysis.

Total Uranium

There are no comments or nonconformances associated with this analysis.

Gamma Spectroscopy

There are no comments or nonconformances associated with this analysis.

I certify that this Certificate of Analysis is in compliance with the terms and conditions of the contract, both technically and for completeness, for other than the conditions detailed above. Release of the data contained in this hardcopy data package has been authorized by the laboratory manager or his designee, as verified by the following signature.

Reviewed and approved:

Robert E. White

Robert E. White
Project Manager

Quanterra
5815 Middlebrook Pike
Knoxville, TN 37921-5947

Project: 552.03

Quanterra Environmental Services 6543

Category: Gross Alpha/Beta
Method: STD Method 7110
Matrix: Filter

Report Date: 10/13/94
Date Sampled: 08/04/94
Date Received: 10/03/94

Client ID	Quanterra ID	Parameter	Prep Date	Date Analyzed	Result	Units	2 Sigma Error (+/-)	MDA
AC1411	6363-001	Gross Alpha	10/10/94	10/11/94	4.51	PCI/FIL	0.75	0.53
AC1411	6363-001	Gross Beta	10/10/94	10/11/94	1.07	PCI/FIL	0.27	0.50

V-R-1 Filter

Quanterra
5815 Middlebrook Pike
Knoxville, TN 37921-5947

Project: 552.03

Quanterra Environmental Services

Category: Gross Alpha/Beta
Method: STD Method 7110
Matrix: Filter

Report Date: 10/13/94
Date Sampled: 08/04/94
Date Received: 10/03/94

Client ID	Quanterra ID	Parameter	Prep Date	Date Analyzed	Result	Units	2 Sigma Error (+/-)	MDA
AC1415	6363-002	Gross Alpha	10/10/94	10/11/94	4.70	PCI/FIL	0.73	0.43
AC1415	6363-002	Gross Beta	10/10/94	10/11/94	1.73	PCI/FIL	0.32	0.47

V-R-2 Filter

Quanterra
5815 Middlebrook Pike
Knoxville, TN 37921-5947

Project: 552.03

Quanterra Environmental Services

6543

Category: Gross Alpha/Beta
Method: STD Method 7110
Matrix: Filter

Report Date: 10/13/94
Date Sampled: 08/04/94
Date Received: 10/03/94

Client ID	Quanterra ID	Parameter	Prep Date	Date Analyzed	Result	Units	2 Sigma Error (+/-)	MDA
AC1419	6363-003	Gross Alpha	10/10/94	10/11/94	4.99	PCI/FIL	0.79	0.48
AC1419	6363-003	Gross Beta	10/10/94	10/11/94	1.42	PCI/FIL	0.30	0.49

V-R-3 Filter

Quanterra
5815 Middlebrook Pike
Knoxville, TN 37921-5947

Project: 552.03

Quanterra Environmental Services

Category: Gross Alpha/Beta
Method: STD Method 7110
Matrix: Filter

Report Date: 10/13/94
Date Sampled: 08/04/94
Date Received: 10/03/94

Client ID	Quanterra ID	Parameter	Prep Date	Date Analyzed	Result	Units	2 Sigma Error (+/-)	MDA
AC1423	6363-004	Gross Alpha	10/10/94	10/11/94	4.95	PCI/FIL	1.00	0.85
AC1423	6363-004	Gross Beta	10/10/94	10/11/94	1.84	PCI/FIL	0.53	0.94

Blank Filter

Quanterra
5815 Middlebrook Pike
Knoxville, TN 37921-5947

Quanterra Environmental Services

Project: 552.03

Category: Gross Alpha/Beta
Method: STD Method 7110
Matrix: Liquid

Report Date: 10/13/94
Date Sampled: 08/04/94
Date Received: 10/03/94

Client ID	Quanterra ID	Parameter	Prep Date	Date Analyzed	Result	Units	2 Sigma Error (+/-)	MDA
AC1412 & AC1413	6363-005	Gross Alpha	10/12/94	10/13/94	ND	PCI/L		1.75
AC1412 & AC1413	6363-005	Gross Beta	10/12/94	10/13/94	ND	PCI/L		2.82

V-R-1 Ace/H_2O

Quanterra
5815 Middlebrook Pike
Knoxville, TN 37921-5947

Project: 552.03

Quanterra Environmental Services

Category: Gross Alpha/Beta
Method: STD Method 7110
Matrix: Liquid

Report Date: 10/13/94
Date Sampled: 08/04/94
Date Received: 10/03/94

Client ID	Quanterra ID	Parameter	Prep Date	Date Analyzed	Result	Units	2 Sigma Error (+/-)	MDA
AC1416 & AC1417	6363-006	Gross Alpha	10/12/94	10/13/94	ND	PCI/L		1.33
AC1416 & AC1417	6363-006	Gross Beta	10/12/94	10/13/94	ND	PCI/L		2.93

V-R-2 Acc/H_2O

Quanterra
5815 Middlebrook Pike
Knoxville, TN 37921-5947

Quanterra Environmental Services

Project: 552.03

Category: Gross Alpha/Beta
Method: STD Method 7110
Matrix: Liquid

Report Date: 10/13/94
Date Sampled: 08/04/94
Date Received: 10/03/94

Client ID	Quanterra ID	Parameter	Prep Date	Date Analyzed	Result	Units	2 Sigma Error (+/-)	MDA
AC1420 & AC1421	6363-007	Gross Alpha	10/12/94	10/13/94	ND	PCI/L		1.63
AC1420 & AC1421	6363-007	Gross Beta	10/12/94	10/13/94	ND	PCI/L		2.73

V-R-3 Ace/H_2O

Quanterra
5815 Middlebrook Pike
Knoxville, TN 37921-5947

Project: 552.03

Quanterra Environmental Services

Category: Gross Alpha/Beta
Method: STD Method 7110
Matrix: Liquid

Report Date: 10/13/94
Date Sampled: 08/04/94
Date Received: 10/03/94

Client ID	Quanterra ID	Parameter	Prep Date	Date Analyzed	Result	Units	2 Sigma Error (+/-)	MDA
AC1424 & AC1425	6363-008	Gross Alpha	10/12/94	10/13/94	ND	PCI/L		1.55
AC1424 & AC1425	6363-008	Gross Beta	10/12/94	10/13/94	ND	PCI/L		2.74

Blank Ace/H_2O

Quanterra
5815 Middlebrook Pike
Knoxville, TN 37921-5947

Quanterra Environmental Services

Project: 552.03

Category: Gross Alpha/Beta
Method: STD Method 7110
Matrix: Filter

Report Date: 10/13/94
Date Sampled: N/A
Date Received: N/A

Client ID	Quanterra ID	Parameter	Prep Date	Date Analyzed	Result	Units	2 Sigma Error (+/-)	MDA
NA	QCBLK47681-1	Gross Alpha	10/10/94	10/11/94	ND	PCI/FIL		0.20
NA	QCBLK47681-1	Gross Beta	10/10/94	10/11/94	ND	PCI/FIL		0.16

Quanterra
5815 Middlebrook Pike
Knoxville, TN 37921-5947

Project: 552.03

Quanterra Environmental Services

Category: Gross Alpha/Beta
Method: STD Method 7110
Matrix: Liquid

Report Date: 10/13/94
Date Sampled: N/A
Date Received: N/A

Client ID	Quanterra ID	Parameter	Prep Date	Date Analyzed	Result	Units	2 Sigma Error (+/-)	MDA
NA	QCBLK48013-1	Gross Alpha	10/12/94	10/13/94	ND	PCI/L		1.44
NA	QCBLK48013-1	Gross Beta	10/12/94	10/13/94	ND	PCI/L		2.63

Quanterra
5815 Middlebrook Pike
Knoxville, TN 37921-5947

Quanterra Environmental Services

Project: 552.03

Category: Gross Alpha/Beta
Method: STD Method 7110
Matrix: Filter

Report Date: 10/13/94
Date Sampled: N/A
Date Received: N/A

Client ID	Quanterra ID	Parameter	Prep Date	Date Analyzed	Result	Units	2 Sigma Error (+/-)	MDA
NA	QCLCS47681-1	Gross Alpha	10/10/94	10/11/94	128	%REC		
NA	QCLCS47681-1	Gross Beta	10/10/94	10/11/94	109	%REC		

Quanterra
5815 Middlebrook Pike
Knoxville, TN 37921-5947

Quanterra Environmental Services

Project: 552.03

Category: Gross Alpha/Beta
Method: STD Method 7110
Matrix: Liquid

Report Date: 10/13/94
Date Sampled: N/A
Date Received: N/A

Client ID	Quanterra ID	Parameter	Prep Date	Date Analyzed	Result	Units	2 Sigma Error (+/-)	MDA
NA	QCLCS48013-1	Gross Alpha	10/12/94	10/13/94	93	%REC		
NA	QCLCS48013-1	Gross Beta	10/12/94	10/13/94	95	%REC		

6543

Quanterra
5815 Middlebrook Pike
Knoxville, TN 37921-5947

Quanterra Environmental Services

Project: 552.03

Category: Gamma Spec.
Method: HASL 300
Matrix: Filter

Report Date: 10/14/94
Date Sampled: 08/04/94
Date Received: 10/03/94

Client ID	Quanterra ID	Parameter	Prep Date	Date Analyzed	Result	Units	2 Sigma Error (+/-)	MDA
AC1411	6363-001	Cesium 137	10/10/94	10/12/94	ND	PCI/FIL		11.5
AC1411	6363-001	Lead 212	10/10/94	10/12/94	18.5	PCI/FIL	15.0	17.8

V-R-1 Filter

Quanterra
5815 Middlebrook Pike
Knoxville, TN 37921-5947

Project: 552.03

Quanterra Environmental Services

Category: Gamma Spec.
Method: HASL 300
Matrix: Filter

Report Date: 10/14/94
Date Sampled: 08/04/94
Date Received: 10/03/94

Client ID	Quanterra ID	Parameter	Prep Date	Date Analyzed	Result	Units	2 Sigma Error (+/-)	MDA
AC1415	6363-002	Cesium 137	10/10/94	10/12/94	ND	PCI/FIL		14.7
AC1415	6363-002	Potassium 40	10/10/94	10/12/94	396	PCI/FIL	120	138

V-R-2 Filter

000151

Quanterra
5815 Middlebrook Pike
Knoxville, TN 37921-5947

Project: 552.03

Quanterra Environmental Services

6543

Category: Gamma Spec.
Method: HASL 300
Matrix: Filter

Report Date: 10/14/94
Date Sampled: 08/04/94
Date Received: 10/03/94

Client ID	Quanterra ID	Parameter	Prep Date	Date Analyzed	Result	Units	2 Sigma Error (+/-)	MDA
AC1419	6363-003	Cesium 137	10/10/94	10/12/94	ND	PCI/FIL		13.9

V-R-3 Filter

000152

Quanterra
5815 Middlebrook Pike
Knoxville, TN 37921-5947

Project: 552.03

Quanterra Environmental Services

Category: Gamma Spec.
Method: HASL 300
Matrix: Filter

Report Date: 10/14/94
Date Sampled: 08/04/94
Date Received: 10/03/94

Client ID	Quanterra ID	Parameter	Prep Date	Date Analyzed	Result	Units	2 Sigma Error (+/-)	MDA
AC1423	6363-004	Cesium 137	10/10/94	10/12/94	ND	PCI/FIL		11.7

Blank Filter

000153

Quanterra
5815 Middlebrook Pike
Knoxville, TN 37921-5947

Project: 552.03

Quanterra Environmental Services

6543

Category: Gamma Scan
Method: EPA 901.1
Matrix: Liquid

Report Date: 10/14/94
Date Sampled: 08/04/94
Date Received: 10/03/94

Client ID	Quanterra ID	Parameter	Prep Date	Date Analyzed	Result	Units	2 Sigma Error (+/-)	MDA
AC1412 & AC1413	6363-005	Cesium 137	10/10/94	10/11/94	ND	PCI/L		6.90

V-R-1 Ace/H_2O

000154

Quanterra
5815 Middlebrook Pike
Knoxville, TN 37921-5947

Project: 552.03

Quanterra Environmental Services

Category: Gamma Scan
Method: EPA 901.1
Matrix: Liquid

Report Date: 10/14/94
Date Sampled: 08/04/94
Date Received: 10/03/94

Client ID	Quanterra ID	Parameter	Prep Date	Date Analyzed	Result	Units	2 Sigma Error (+/-)	MDA
AC1416 & AC1417	6363-006	Cesium 137	10/10/94	10/11/94	ND	PCI/L		8.44
AC1416 & AC1417	6363-006	Potassium 40	10/10/94	10/11/94	209	PCI/L	71	97

V-R-2 Acl/H_2O

6543

Quanterra
5815 Middlebrook Pike
Knoxville, TN 37921-5947

Quanterra Environmental Services

Project: 552.03

Category: Gamma Scan
Method: EPA 901.1
Matrix: Liquid

Report Date: 10/14/94
Date Sampled: 08/04/94
Date Received: 10/03/94

Client ID	Quanterra ID	Parameter	Prep Date	Date Analyzed	Result	Units	2 Sigma Error (+/-)	MDA
AC1420 & AC1421	6363-007	Cesium 137	10/10/94	10/11/94	ND	PCI/L		8.04

V-R-3 Ace/H_2O

Quanterra
5815 Middlebrook Pike
Knoxville, TN 37921-5947

Project: 552.03

Quanterra Environmental Services

Category: Gamma Scan
Method: EPA 901.1
Matrix: Liquid

Report Date: 10/14/94
Date Sampled: 08/04/94
Date Received: 10/03/94

Client ID	Quanterra ID	Parameter	Prep Date	Date Analyzed	Result	Units	2 Sigma Error (+/-)	MDA
AC1424 & AC1425	6363-008	Cesium 137	10/10/94	10/11/94	ND	PCI/L		7.88

Blank Ace/H_2O

Quanterra
5815 Middlebrook Pike
Knoxville, TN 37921-5947

Quanterra Environmental Services

Project: 552.03

Category: Gamma Scan
Method: EPA 901.1
Matrix: Liquid

Report Date: 10/14/94
Date Sampled: N/A
Date Received: N/A

Client ID	Quanterra ID	Parameter	Prep Date	Date Analyzed	Result	Units	2 Sigma Error (+/-)	MDA
NA	QCBLK47670-1	Cesium 137	10/10/94	10/12/94	ND	PCI/L		7.98

Quanterra
5815 Middlebrook Pike
Knoxville, TN 37921-5947

Project: 552.03

Quanterra Environmental Services

Category: Gamma Spec.
Method: HASL 300
Matrix: Filter

Report Date: 10/14/94
Date Sampled: N/A
Date Received: N/A

Client ID	Quanterra ID	Parameter	Prep Date	Date Analyzed	Result	Units	2 Sigma Error (+/-)	MDA
NA	QCBLK47676-1	Cesium 137	10/10/94	10/12/94	ND	PCI/FIL		12.5

Quanterra
5815 Middlebrook Pike
Knoxville, TN 37921-5947

Quanterra Environmental Services

Project: 552.03

Category: Gamma Scan
Method: EPA 901.1
Matrix: Liquid

Report Date: 10/14/94
Date Sampled: N/A
Date Received: N/A

Client ID	Quanterra ID	Parameter	Prep Date	Date Analyzed	Result	Units	2 Sigma Error (+/-)	MDA
NA	QCLCS47670-1	Americium 241	10/10/94	10/13/94	98	%REC		
NA	QCLCS47670-1	Cesium 137	10/10/94	10/13/94	101	%REC		
NA	QCLCS47670-1	Cobalt 60	10/10/94	10/13/94	100	%REC		

Quanterra
5815 Middlebrook Pike
Knoxville, TN 37921-5947

Project: 552.03

Quanterra Environmental Services

Category: Gamma Spec.
Method: HASL 300
Matrix: Filter

Report Date: 10/14/94
Date Sampled: N/A
Date Received: N/A

Client ID	Quanterra ID	Parameter	Prep Date	Date Analyzed	Result	Units	2 Sigma Error (+/-)	MDA
NA	QCLCS47676-1	Americium 241	10/10/94	10/13/94	96	%REC		
NA	QCLCS47676-1	Cesium 137	10/10/94	10/13/94	105	%REC		
NA	QCLCS47676-1	Cobalt 60	10/10/94	10/13/94	101	%REC		

6543

Quanterra
5815 Middlebrook Pike
Knoxville, TN 37921-5947

Quanterra Environmental Services

Project: 552.03

Category: TOTAL URANIUM (KPA)
Method: ASTM 5174-91
Matrix: Filter

Report Date: 10/14/94
Date Sampled: 08/04/94
Date Received: 10/03/94

Client ID	Quanterra ID	Parameter	Prep Date	Date Analyzed	Result	Units	2 Sigma Error (+/-)	MDA
AC1411	6363-001	Uranium, Total	10/12/94	10/12/94	ND	PCI/FIL		$\frac{2.12}{.706} = 3.00\mu g$
V-R-1 Filter								

Note: The coversion of µg of uranium to pCi of uranium is based on the DOT (49CFR173.434) conversion factor of 0.706 pCi/µg.

Quanterra
5815 Middlebrook Pike
Knoxville, TN 37921-5947

Project: 552.03

Quanterra Environmental Services

Category: TOTAL URANIUM (KPA)
Method: ASTM 5174-91
Matrix: Filter

Report Date: 10/14/94
Date Sampled: 08/04/94
Date Received: 10/03/94

Client ID	Quanterra ID	Parameter	Prep Date	Date Analyzed	Result	Units	2 Sigma Error (+/-)	MDA
AC1415	6363-002	Uranium, Total	10/12/94	10/12/94	ND	PCI/FIL		$\frac{2.12}{.706} = 3.0$

V-R-2 Filter

JD

000163

6543

Quanterra
5815 Middlebrook Pike
Knoxville, TN 37921-5947

Project: 552.03

Quanterra Environmental Services

Category: TOTAL URANIUM (KPA)
Method: ASTM 5174-91
Matrix: Filter

Report Date: 10/14/94
Date Sampled: 08/04/94
Date Received: 10/03/94

Client ID	Quanterra ID	Parameter	Prep Date	Date Analyzed	Result	Units	2 Sigma Error (+/-)	MDA
AC1419	6363-003	Uranium, Total	10/12/94	10/12/94	ND	PCI/FIL		$\frac{2.12}{.706} = 3.00$ µg

V-R-3 Filter

Quanterra
5815 Middlebrook Pike
Knoxville, TN 37921-5947

Project: 552.03

Quanterra Environmental Services

Category: TOTAL URANIUM (KPA)
Method: ASTM 5174-91
Matrix: Filter

Report Date: 10/14/94
Date Sampled: 08/04/94
Date Received: 10/03/94

Client ID	Quanterra ID	Parameter	Prep Date	Date Analyzed	Result	Units	2 Sigma Error (+/-)	MDA
AC1423	6363-004	Uranium, Total	10/12/94	10/12/94	ND	PCI/FIL		2.12 / .706 = 3.

Blank Filter

000165

6543

Quanterra
5815 Middlebrook Pike
Knoxville, TN 37921-5947

Quanterra Environmental Services

Project: 552.03

Category: TOTAL URANIUM (KPA)
Method: ASTM 5174-91
Matrix: Liquid

Report Date: 10/14/94
Date Sampled: 08/04/94
Date Received: 10/03/94

Client ID	Quanterra ID	Parameter	Prep Date	Date Analyzed	Result	Units	2 Sigma Error (+/-)	MDA
AC1412 & AC1413	6363-005	Uranium, Total	10/10/94	10/12/94	ND	PCI/L		0.71 / .706 = 1.00 µg/l

V-R-1 Acc/H_2O

Quanterra
5815 Middlebrook Pike
Knoxville, TN 37921-5947

Project: 552.03

Quanterra Environmental Services

Category: TOTAL URANIUM (KPA)
Method: ASTM 5174-91
Matrix: Liquid

Report Date: 10/14/94
Date Sampled: 08/04/94
Date Received: 10/03/94

Client ID	Quanterra ID	Parameter	Prep Date	Date Analyzed	Result	Units	2 Sigma Error (+/-)	MDA
AC1416 & AC1417	6363-006	Uranium, Total	10/10/94	10/12/94	ND	PCI/L		$\frac{0.71}{.706} = 1.0$

V-R-2 Acc/H_2O

Quanterra
5815 Middlebrook Pike
Knoxville, TN 37921-5947

Quanterra Environmental Services

Project: 552.03

Category: TOTAL URANIUM (KPA)
Method: ASTM 5174-91
Matrix: Liquid

Report Date: 10/14/94
Date Sampled: 08/04/94
Date Received: 10/03/94

Client ID	Quanterra ID	Parameter	Prep Date	Date Analyzed	Result	Units	2 Sigma Error (+/-)	MDA
AC1420 & AC1421	6363-007	Uranium, Total	10/10/94	10/12/94	15.4	PCI/L	2.24	0.71 / .706 = 1.00 µg/l (DFW)

V-R-3 Acc/H_2O

Quanterra
5815 Middlebrook Pike
Knoxville, TN 37921-5947

Project: 552.03

Quanterra Environmental Services

Category: TOTAL URANIUM (KPA)
Method: ASTM 5174-91
Matrix: Liquid

Report Date: 10/14/94
Date Sampled: 08/04/94
Date Received: 10/03/94

Client ID	Quanterra ID	Parameter	Prep Date	Date Analyzed	Result	Units	2 Sigma Error (+/-)	MDA
AC1424 & AC1425	6363-008	Uranium, Total	10/10/94	10/12/94	1.28	PCI/L	0.14	0.71 / .706 =1.

Blank Ace/H_2O

Quanterra
5815 Middlebrook Pike
Knoxville, TN 37921-5947

Project: 552.03

6543

Quanterra Environmental Services

Category: TOTAL URANIUM (KPA)
Method: ASTM 5174-91
Matrix: Liquid

Report Date: 10/14/94
Date Sampled: N/A
Date Received: N/A

Client ID	Quanterra ID	Parameter	Prep Date	Date Analyzed	Result	Units	2 Sigma Error (+/-)	MDA
NA	QCBLK47641-1	Uranium, Total	10/10/94	10/12/94	ND	PCI/L		0.71

$\frac{0.71}{.706} = 1.00 \mu g/l$

Quanterra
5815 Middlebrook Pike
Knoxville, TN 37921-5947

Project: 552.03

Quanterra Environmental Services

Category: TOTAL URANIUM (KPA)
Method: ASTM 5174-91
Matrix: Filter

Report Date: 10/14/94
Date Sampled: N/A
Date Received: N/A

Client ID	Quanterra ID	Parameter	Prep Date	Date Analyzed	Result	Units	2 Sigma Error (+/-)	MDA
NA	QCBLK47842-1	Uranium, Total	10/12/94	10/12/94	ND	PCI/FIL		2.12 / .706 = 3.

000171

Quanterra
5815 Middlebrook Pike
Knoxville, TN 37921-5947

Project: 552.03

Quanterra Environmental Services

6543

Category: TOTAL URANIUM (KPA)
Method: ASTM 5174-91
Matrix: Liquid

Report Date: 10/14/94
Date Sampled: N/A
Date Received: N/A

Client ID	Quanterra ID	Parameter	Prep Date	Date Analyzed	Result	Units	2 Sigma Error (+/-)	MDA
NA	QCLCS47641-1	Uranium, Total	10/10/94	10/12/94	114	%REC		

000172

Quanterra
5815 Middlebrook Pike
Knoxville, TN 37921-5947

Project: 552.03

Quanterra Environmental Services

Category: TOTAL URANIUM (KPA)
Method: ASTM 5174-91
Matrix: Filter

Report Date: 10/14/94
Date Sampled: N/A
Date Received: N/A

Client ID	Quanterra ID	Parameter	Prep Date	Date Analyzed	Result	Units	2 Sigma Error (+/-)	MDA
NA	QCLCS47842-1	Uranium, Total	10/12/94	10/12/94	119	%REC		

Quanterra October 06, 1994 09:01 am
Account: 10979 Project: 552.03 QUANTERRA QAS No. 742 Rev. 0
Master Sample Login: 6363

Project Manager: R. White

Draft: (Final:) Entered and Reviewed by: M. Jackson PM Review: Robert E. White 10/06/94

Sample Header Template:

Sample No. / # / Data:	Client ID / Container Type / Comments	C-Matrix / Analysis	Date: Collected / Class	Received / Preservative	Due / Anal. Due Date	Shipper / Hold Date	Rad Category / Site	Rad Sample No. (Container Numbers:% Filled)
6363-001	AC1411	Filter	04-AUG-94 12:00	03-OCT-94 09:15	14-OCT-94	FED-EX	1	Screening not Required
1	C - Petri, filter	ABT/SM7110/Q4	S	COLD	12-OCT-94	05-MAR-95	S4H	(104913:100)
1		RAD/GAMMA/Q4	S	COLD	12-OCT-94	05-MAR-95	S4H	(104913:100)
1		RAD/KPA/Q4	S	COLD	12-OCT-94	01-APR-95	S4H	(104913:100)
6363-002	AC1415	Filter	04-AUG-94 12:00	03-OCT-94 09:15	14-OCT-94	FED-EX	1	Screening not Required
1	C - Petri, filter	ABT/SM7110/Q4	S	COLD	12-OCT-94	05-MAR-95	S4H	(104918:100)
1		RAD/GAMMA/Q4	S	COLD	12-OCT-94	05-MAR-95	S4H	(104918:100)
1		RAD/KPA/Q4	S	COLD	12-OCT-94	01-APR-95	S4H	(104918:100)
6363-003	AC1419	Filter	04-AUG-94 12:00	03-OCT-94 09:15	14-OCT-94	FED-EX	1	Screening not Required
1	C - Petri, filter	ABT/SM7110/Q4	S	COLD	12-OCT-94	05-MAR-95	S4H	(104920:100)
1		RAD/GAMMA/Q4	S	COLD	12-OCT-94	05-MAR-95	S4H	(104920:100)
1		RAD/KPA/Q4	S	COLD	12-OCT-94	01-APR-95	S4H	(104920:100)
6363-004	AC1423	Filter	04-AUG-94 12:00	03-OCT-94 09:15	14-OCT-94	FED-EX	1	Screening not Required
1	C - Petri, filter	ABT/SM7110/Q4	S	COLD	12-OCT-94	05-MAR-95	S4H	(104922:100)
1		RAD/GAMMA/Q4	S	COLD	12-OCT-94	05-MAR-95	S4H	(104922:100)
1		RAD/KPA/Q4	S	COLD	12-OCT-94	01-APR-95	S4H	(104922:100)
6363-005	AC1412 & AC1413	Liquid	04-AUG-94 12:00	03-OCT-94 09:15	14-OCT-94	FED-EX	1	Screening not Required
	COMPOSITE WATER AND ACETONE							
1	AN - Amber Glass-500ml	ABT/SM7110/Q4	S	COLD	12-OCT-94	05-MAR-95	S4H	(104923:30)
1		RAD/901.1/Q4	S	COLD	12-OCT-94	01-APR-95	S4H	(104923:30)
1		RAD/KPA/Q4	S	COLD	12-OCT-94	01-APR-95	S4H	(104923:30)
1	PN - Plastic-1L	ABT/SM7110/Q4	S	COLD	12-OCT-94	05-MAR-95	S4H	(104924:30)
1		RAD/901.1/Q4	S	COLD	12-OCT-94	01-APR-95	S4H	(104924:30)
1		RAD/KPA/Q4	S	COLD	12-OCT-94	01-APR-95	S4H	(104924:30)
6363-006	AC1416 & AC1417	Liquid	04-AUG-94 12:00	03-OCT-94 09:15	14-OCT-94	FED-EX	1	Screening not Required
	COMPOSITE WATER AND ACETONE							
1	AN - Amber Glass-500ml	ABT/SM7110/Q4	S	COLD	12-OCT-94	05-MAR-95	S4H	(104925:30)
		RAD/901.1/Q4	S	COLD	12-OCT-94	01-APR-95	S4H	(104925:30)

3*=Sample has not been rad screened.

C-59

000174

6543

Quanterra October 06, 1994 09:01 am
Account: 10979 Project: 552.03 QUANTERRA QAS No. 742 Rev. 0
Master Sample Login: 6363

Project Manager: R. White

Draft: Final: Entered and Reviewed by:_____ PM Review:_____

Sample Header Template: _____

Sample No. / Comments	Client ID	C-Matrix	Date: Collected	Received	Due	Shipper	Rad Category	Rad Sample No.
6363-007	AC1420 & AC1421	Liquid	04-AUG-94 12:00	03-OCT-94 09:15	14-OCT-94	FED-EX	1	Screening not Required
COMPOSITE WATER AND ACETONE								

# Container Type	Analysis	Class	Preservative	Anal. Due Date	Hold Date	Site	(Container Numbers:% Filled)
Data:							
1	RAD/KPA/Q4	S	COLD	12-OCT-94	01-APR-95	S4H	(104925:30)
1 PN - Plastic-1L	ABT/SM7110/Q4	S	COLD	12-OCT-94	05-MAR-95	S4H	(104926:30)
1	RAD/901.1/Q4	S	COLD	12-OCT-94	01-APR-95	S4H	(104926:30)
1	RAD/KPA/Q4	S	COLD	12-OCT-94	01-APR-95	S4H	(104926:30)
1 AN - Amber Glass-500ml	ABT/SM7110/Q4	S	COLD	12-OCT-94	05-MAR-95	S4H	(104927:30)
1	RAD/901.1/Q4	S	COLD	12-OCT-94	01-APR-95	S4H	(104927:30)
1	RAD/KPA/Q4	S	COLD	12-OCT-94	01-APR-95	S4H	(104927:30)
1 PN - Plastic-1L	ABT/SM7110/Q4	S	COLD	12-OCT-94	05-MAR-95	S4H	(104928:30)
1	RAD/901.1/Q4	S	COLD	12-OCT-94	01-APR-95	S4H	(104928:30)
1	RAD/KPA/Q4	S	COLD	12-OCT-94	01-APR-95	S4H	(104928:30)

Sample No. / Comments	Client ID	C-Matrix	Date: Collected	Received	Due	Shipper	Rad Category	Rad Sample No.
6363-008	AC1424 & AC1425	Liquid	04-AUG-94 12:00	03-OCT-94 09:15	14-OCT-94	FED-EX	1	Screening not Required
COMPOSITE WATER AND ACETONE								

# Container Type	Analysis	Class	Preservative	Anal. Due Date	Hold Date	Site	(Container Numbers:% Filled)
1 AN - Amber Glass-500ml	ABT/SM7110/Q4	S	COLD	12-OCT-94	05-MAR-95	S4H	(104929:30)
1	RAD/901.1/Q4	S	COLD	12-OCT-94	01-APR-95	S4H	(104929:30)
1	RAD/KPA/Q4	S	COLD	12-OCT-94	01-APR-95	S4H	(104929:30)
1 PN - Plastic-1L	ABT/SM7110/Q4	S	COLD	12-OCT-94	05-MAR-95	S4H	(104930:30)
1	RAD/901.1/Q4	S	COLD	12-OCT-94	01-APR-95	S4H	(104930:30)
1	RAD/KPA/Q4	S	COLD	12-OCT-94	01-APR-95	S4H	(104930:30)

3*=Sample has not been rad screened.

INTERNATIONAL TECHNOLOGY CORPORATION

ANALYSIS REQUEST AND CHAIN OF CUSTODY RECORD*

Reference Document No. 460496
Page 1 of ___

Project Name/No. [1] 1498 / Fermco
Sample Team Members [2] N/A
Profit Center No. [3] 140
Project Manager [4] Ken Mueller
Purchase Order No. [6] To Follow
Required Report Date [11] 10/10/94

Samples Shipment Date [7] 9/30/94
Lab Destination [8] QES, Earth City
Lab Contact [9] N/A
Project Contact/Phone [12] 615-588-6401
Carrier/Waybill No. [13] FEDX 6179 6732 357

Bill to: [5] Quanterra
5815 Middlebrook Pike
Knoxville, TN 37921

Report to: [10] Ken Mueller
(Same)

White: To accompany samples
Yellow: Field copy

ONE CONTAINER PER LINE

Sample Number [14]	Sample Description/Type [15]	Date/Time Collected [16]	Container Type [17]	Sample Volume [18]	Preservative [19]	Requested Testing Program [20]	o/c Fil	Condition on Receipt [21]	Disposal Record No. [22]
AC1411	V-R-1 Filter Run 1	8/4/94 12:00	Petri	1 ea	None	See Attached			
AC1412	V-R-1 Acetone	↓	Amber	~200 ml	↓	Orig. RFA/COC for	30%	FOR LAB USE ONLY	
AC1413	V-R-1 H_2O	↓	Poly	~300 ml	↓	Compositing and	30%		
AC1415	V-R-2 Filter Run 2	↓	Petri	1 ea	None	Tests.			
AC1416	V-R-2 Acetone	↓	Amber	~200 ml	↓	↓	30%	FOR LAB USE ONLY	
AC1417	V-R-2 H_2O	↓	Poly	~300 ml	↓	↓	30%		
AC1419	V-R-3 Filter Run 3	↓	Petri	1 ea	↓	↓			
AC1420	V-R-3 Acetone	↓	Amber	~200 ml	↓	↓	30%		

Special Instructions: [23]

Possible Hazard Identification: [24]
Non-hazard ☐ Flammable ☐ Skin Irritant ☐ Poison B ☐ Unknown ☑

Sample Disposal: [25]
Return to Client ☐ Disposal by Lab ☑ Archive ____ (mos.)

Turnaround Time Required: [26]
Normal ☑ Rush ☐

QC Level: [27]
I. ☑ II. ☐ III. ☐ Project Specific (specify):

1. Relinquished by [28] (Signature/Affiliation) Bryan Blomquist QES KN Date: 9/30/94 Time: 18:15	1. Received by [28] (Signature/Affiliation) Larry Phillips Date: 10/03/94 Time: 0915
2. Relinquished by (Signature/Affiliation) Date: Time:	2. Received by (Signature/Affiliation) Date: Time:
3. Relinquished by (Signature/Affiliation) Date: Time:	3. Received by (Signature/Affiliation) Date: Time:

Comments: [29]

*See back of form for special instructions.

C-61

000176

6543

INTERNATIONAL TECHNOLOGY CORPORATION

ANALYSIS REQUEST AND CHAIN OF CUSTODY RECORD (cont.)*

Reference Document No.[30] 460496
Page 2 of 2

Project Name Fermco

Project No. WO# 1498

Samples Shipment Date 9/30/94

ONE CONTAINER PER LINE

Sample[14] Number	Sample[15] Description/Type	Date/Time[16] Collected	Container[17] Type	Sample[18] Volume	Pre-[19] servative	Requested Testing[20] Program	% Fill	Condition on[21] Receipt	Disposal[22] Record No.
AC1421	V-R-3 H_2O Run 3	8/4/94 12:00	Poly	~300ml	None	See Attached	30%		
AC1423	BLANK Filter BLANK		Petri	1ea		Instruction			
AC1424	BLANK Acetone		Amber	~200ml		for Compositing	30%		
AC1425	BLANK H_2O		Poly	~300ml		and Analysis.	30%		

White: To accompany samples
Yellow: Field copy
*See back of form for special instructions.

C-62

000177

INTERNATIONAL TECHNOLOGY CORPORATION

•0000681•

ANALYSIS REQUEST AND CHAIN OF CUSTODY RECORD*

WO RL # 1805

Reference Document No. 419367

Page 1 of 2

Project Name/No. [1] FERMCo/332331

Sample Team Members [2] Thress, Carls

Profit Center No. [3] 3572

Project Manager [4] Osterhout

Purchase Order No. [6]

Required Report Date [11]

Samples Shipment Date [7]

Lab Destination [8]

Lab Contact [9]

Project Contact/Phone [12] Osterhout 513-782-4700

Carrier/Waybill No. [13]

Bill to: [5]

Report to: [10] Dave Osterhout IT-Cincinnati

ONE CONTAINER PER LINE

Sample Number [14]	Sample Description/Type [15]	%	Date/Time Collected [16]	Container Type [17]	Sample Volume [18]	Pre-servative [19]	Requested Testing Program [20]	Condition on Receipt [21]	Disposal Record No. [22]
380B Rum V-R-1	Filter		8/4/94	Petri	—	None	For each run:		
380A	Acetone	30%		Glass Amber			Combine fractions for:		
383A	H_2O	30%		Poly					
487B Rum V-R-2	Filter			Petri	—		- total activity		
487A	Acetone	30%		Glass Amber			- gross alpha by gas flow proportional counter		
488A	H_2O	30%		Poly			- gross beta " "		
							- gamma by gamma spectroscopy		
							- total uranium by laser phosphorimetry		

Special Instructions: [23]

Possible Hazard Identification: [24]
Non-hazard [X] Flammable [ ] Skin Irritant [ ] Poison B [ ] Unknown [ ]

Sample Disposal: [25]
Return to Client [ ] Disposal by Lab [X] Archive ___ (mos.)

Turnaround Time Required: [26]
Normal [ ] Rush [ ]

QC Level: [27]
I. [ ] II. [ ] III. [ ] Project Specific (specify): ___

1. Relinquished by [28] (Signature/Affiliation) Carl Thress IT	Date: 8/10/94 Time: 1050	1. Received by [28] (Signature/Affiliation) Tim Miller FERMCO	Date: 8-10-94 Time: 1050
2. Relinquished by (Signature/Affiliation) Tim Miller FERMCO	Date: 8/16/94 Time: 1300	2. Received by (Signature/Affiliation) Bryan Blomquist QESKN	Date: 8/18/94 Time: 9:20
3. Relinquished by (Signature/Affiliation)	Date: Time:	3. Received by (Signature/Affiliation) Larry Phillips	Date: 10/03/94 Time: 09:15

Comments: [29]

195 3628 887 = 25°C @ 1805

195 3628 914 = 22°C @ 1806

MCA 3/15/91

C-63

White: To accompany samples

Yellow: Field copy

See back of form for special instructions.

0001278

6543

INTERNATIONAL TECHNOLOGY CORPORATION

ANALYSIS REQUEST AND CHAIN OF CUSTODY RECORD (cont.)*

Project Name FERMCo

Project No. 332331

Reference Document No.[30] 419367

Page 2 of 2

Samples Shipment Date 8/16/94 / 1300

Tim Miller

ONE CONTAINER PER LINE

Sample[14] Number	Sample[15] Description/Type	Date/Time[16] Collected	Container[17] Type	Sample[18] Volume	Pre-[19] servative	Requested Testing[20] Program	% Fill	Condition on[21] Receipt	Disposal[22] Record No.
489B	Filter	8/4/94	Petri	—	None				
489A	Acetone		Glass						
490A	H_2O		Poly						
459B	Filter		Petri	—					
384A	Acetone		Glass						
382A	H_2O		Poly						

Rem VR3

Blank

FOR LAB USE ONLY

White: To accompany samples

Yellow: Field copy

*See back of form for special instructions

Quanterra
Environmental Services

Quanterra Incorporated
5815 Middlebrook Pike
Knoxville, Tennessee 37921

615 588-6401 Telephone
615 584-4315 Fax

IT Air Quality Services
11499 Chester Road
Cincinnati, OH 45246
Attn: Dave Osterhout

October 31, 1994

Job Number: 1538

This is the Certificate of Analysis for the following samples:

Client Project ID:	FERMCO
Date Received by Lab:	September 27, 1994
Number of Samples:	Nine (9)
Sample Type:	Air

I. Introduction

On September 27, 1994, nine (9) air samples arrived at Quanterra Environmental Services, Knoxville, Tennessee, from IT Air Quality Services, Cincinnati, Ohio. The list of analytical tests performed, as well as date of receipt and analysis, can be found in the attached report.

II. Analytical Results/Methodology

The analytical results for this report are presented by analytical test. Each set of data will include sample identification information and the analytical results.

The samples were analyzed for hydrochloric acid based on method BIF 9057.

The samples were analyzed for fluoride by Ross Analytical Services, Inc., Strongsville, Ohio.

Reviewed and Approved:

Kenneth Mueller
Project Manager

III. Quality Control

Routine laboratory level I QC was followed.

Quanterra Environmental Services

IT Air Quality Services
October 31, 1994

Client Project ID: FERMCO

Job Number: 1538

HYDROCHLORIC ACID ANALYSIS

Results in mg

Sample Matrix: Air

Client Sample ID		Lab Sample ID	Result	Qualifier	Detection Limit
Method Blank		AC3701	2.5	U	2.5
V-C-2	0469	AC1797	2.4	U	2.4
V-C-1	0395	AC1800	2.5	U	2.5
V-C-3	0470	AC1801	2.8	U	2.8
H_2SO_4 blank	0472	AC1802	3.2	U	3.2
H_2O blank	0473	AC1803	4.5	U	4.5

Analysis Date: 10/18/94

U - Compound was analyzed for but not detected. The number is the detection limit for the sample.

Quanterra Environmental Services

Client Project ID: FERMCO

Job Number: 1538

LABORATORY CONTROL SAMPLE % RECOVERY

Results in mg

Sample Matrix: Air

Client Sample ID: LCS
Lab Sample ID: AC3703

Compound	Blank Result	LCS True Value	LCS Result	% Recovery
hydrochloric acid	2.5 U	12	11	92

Prep Date: 10/18/94
Analysis Date: 10/18/94

U - Compound was analyzed for but not detected. The number is the detection limit for the sample.

Quanterra Environmental Services

IT Air Quality Services
October 31, 1994

Client Project ID: FERMCO

Job Number: 1538

FLUORIDE ANALYSIS

Results in mg

Sample Matrix: Air

Client Sample ID		Lab Sample ID	Result	Estimated Quantitation Limit
V-F-3	0448	AC1810	6.8	3.0
V-F-1	0446	AC1811	6.3	3.0
V-F-2	0447	AC1812	7.5	3.0
H_2O blank	0471	AC1813	<EQL	1.5

EQL - Estimated Quantitation Limit.

INTERNATIONAL TECHNOLOGY CORPORATION

COC NO. *0000726*

ANALYSIS REQUEST AND CHAIN OF CUSTODY RECORD*

WO # 1500 R# 1860

Reference Document No. 411966

Page 1 of 2

000185

Project Name/No. [1]

Sample Team Members [2] Sample Control

Profit Center No. [3]

Project Manager [4]

Purchase Order No. [6]

Required Report Date [11]

Samples Shipment Date [7]

Lab Destination [8]

Lab Contact [9]

Project Contact/Phone [12]

Carrier/Waybill No. [13]

Bill to: [5]

Report to: [10]

ONE CONTAINER PER LINE

Sample Number [14]	Sample Description/Type [15]	Date/Time Collected [16]	Container Type [17]	Sample Volume [18]	Pre-servative [19]	Requested Testing Program [20]	Condition on Receipt [21]	Disposal Record No. [22]
0469	HCl	9/15/94	1 Liter plastic	20%	HCl		16°C BPB 9/27/94 NO Custody seals.	
0448	Fluoride	9/15/94	1 Liter plastic	40%	Fluoride			
0395	HCl	9/15/94	1 Liter plastic	20%	HCl			
0470	HCl	9/15/94	1 Liter plastic	20%	HCl			
0472	HCl	9/15/94	1 Liter plastic	30%	HCl			
0446	Fluoride	9/15/94	1 Liter plastic	40%	Fluoride			
0447	Fluoride	9/15/94	1 Liter plastic	30%	Fluoride			
0473	HCl	9/15/94	1 Liter plastic	50%	HCl			

Special Instructions: [23]

Possible Hazard Identification: [24]
Non-hazard ☐ Flammable ☐ Skin Irritant ☐ Poison B ☐ Unknown ☐

Sample Disposal: [25]
Return to Client ☐ Disposal by Lab ☐ Archive (mos.)

Turnaround Time Required: [26]
Normal ☐ Rush ☐

QC Level: [27]
I. ☐ II. ☐ III. ☐ Project Specific (specify):

1. Relinquished by [28] (Signature/Affiliation) Larry Phillips	Date: 09/26/94 Time: 1700	1. Received by [28] (Signature/Affiliation) Bryan Blomquist DESKN	Date: 9/27/94 Time: 8:50
2. Relinquished by (Signature/Affiliation)	Date: Time:	2. Received by (Signature/Affiliation)	Date: Time:
3. Relinquished by (Signature/Affiliation)	Date: Time:	3. Received by (Signature/Affiliation)	Date: Time:

Comments: [29]

White: To accompany samples

Yellow: Field copy

*See back of form for special instructions.

C-70

INTERNATIONAL TECHNOLOGY CORPORATION

CoC #720

ANALYSIS REQUEST AND CHAIN OF CUSTODY RECORD (cont.)*

WO

Reference Document No.[30] 411966

Page 2 of 2

Project Name

Project No.

Samples Shipment Date

ONE CONTAINER PER LINE

Sample[14] Number	Sample[15] Description/Type	Date/Time[16] Collected	Container[17] Type	Sample[18] Volume	Pre-[19] servative	Requested Testing[20] Program	Condition on[21] Receipt	Disposal[22] Record No.
0471	Floride	9/15/94	250 ml plastic	90%	Floride		16° BTB 9/27/94	

Nothing Following

White: To accompany samples

Yellow: Field copy

*See back of form for special instructions.

C-71

000186

6543

Quanterra
Environmental Services

Quanterra Incorporated
5815 Middlebrook Pike
Knoxville, Tennessee 37921

615 588-6401 Telephone
615 584-4315 Fax

IT Air Quality Services
11499 Chester Road
Cincinnati, OH 45246
Attn: Dave Osterhout

October 21, 1994

Job Number: 1500

This is the Certificate of Analysis for the following samples:

Client Project ID:	FERMCO/332331
Date Received by Lab:	August 18, 1994
Number of Samples:	Eight (8)
Sample Type:	Water

I. Introduction

On August 18, 1994, eight (8) water samples arrived at Quanterra Environmental Services, Knoxville, Tennessee, from IT Air Quality Services, Cincinnati, Ohio. The list of analytical tests performed, as well as date of receipt and analysis, can be found in the attached report.

II. Analytical Results/Methodology

The analytical results for this report are presented by analytical test. Each set of data will include sample identification information and the analytical results.

The samples were analyzed for sulfur dioxide based on EPA method 6.

Reviewed and Approved:

for

Kenneth Mueller
Project Manager

III. Quality Control

Routine laboratory level I QC was followed.

IT Air Quality Services
October 21, 1994

Quanterra Environmental Services

Client Project ID: FERMCO/332331 Job Number: 1500

SULFUR DIOXIDE ANALYSIS

Results in mg

Sample Matrix: Air

Client Sample ID	Lab Sample ID	Result 1st Run	Result 2nd Run	Average Amount	Detection Limit
387A (Run V-S-1A)	AC1427	0.007	0.020	0.014	0.007
388A (Run V-S-1B)	AC1430	0.008	0.022	0.015	0.007
389A (Run V-S-2A)	AC1431	0.020	0.020	0.020	0.007
390A (Run V-S-2B)	AC1432	0.023	0.008	0.016	0.008
391A (Run V-S-3A)	AC1433	0.020	0.020	0.020	0.007
392A (Run V-S-3B)	AC1434	0.024	0.024	0.024	0.008
394A (H_2O_2 Blank)	AC1435	0.008	0.022	0.015	0.007
382A (H_2O Blank)	AC1437	0.071	0.071	0.071	0.024

Analysis Date: 10/19/94

INTERNATIONAL TECHNOLOGY CORPORATION

0000682

ANALYSIS REQUEST AND CHAIN OF CUSTODY RECORD*

WO RL #1809

Reference Document No. 419370

Page 1 of 1

Project Name/No. [1] FERMCO/332331

Sample Team Members [2] Thress, Carls

Profit Center No. [3] 3572

Project Manager [4] Osterhart

Purchase Order No. [6]

Required Report Date [11]

Samples Shipment Date [7]

Lab Destination [8]

Lab Contact [9]

Project Contact/Phone [12] Osterhart 513-782-4700

Carrier/Waybill No. [13]

Bill to: [5]

Report to: [10] Dave Osterhart IT-Cincinnati

White: To accompany samples

Yellow: Field copy

ONE CONTAINER PER LINE

Sample Number [14]	Sample Description/Type [15]	Date/Time Collected [16]	Container Type [17]	Sample Volume [18]	Pre-servative [19]	Requested Testing Program [20]	Condition on Receipt [21]	Disposal Record No. [22]
387A (Run V-S-1A)	3% H_2O_2	8/8/94	Poly		None	Analyze for SO_2 by barium-thorin		
388A (Run V-S-1B)	H_2O_2					titration per EPA 6	Rec'd @ 1130 8/18/94 Ambient temp 23C	
389A (Run V-S-2A)	H_2O_2							
390A (Run V-S-2B)	H_2O_2							
391A (Run V-S-3A)	H_2O_2							
392A (Run V-S-3B)	H_2O_2							
394A (H_2O_2 blank)	H_2O_2							
382A (H_2O blank)	H_2O							

FOR LAB USE ONLY

C-75

Special Instructions: [23]

Possible Hazard Identification: [24]
Non-hazard [X] Flammable [ ] Skin Irritant [ ] Poison B [ ] Unknown [ ]

Sample Disposal: [25]
Return to Client [ ] Disposal by Lab [X] Archive ____ (mos.)

Turnaround Time Required: [26]
Normal [ ] Rush [ ]

QC Level: [27]
I. [ ] II. [ ] III. [ ] Project Specific (specify):

1. Relinquished by [28] (Signature/Affiliation) Gary Thress IT	Date: 8-10-94 Time: 1050	1. Received by [28] (Signature/Affiliation) Tim Miller FERMCO	Date: 8-10-94 Time: 1050
2. Relinquished by (Signature/Affiliation) Tim Miller FERMCO	Date: 8/16/94 Time: 1300	2. Received by (Signature/Affiliation) Bryan Blanquart QESKAL	Date: 8/18/94 Time: 9:20
3. Relinquished by (Signature/Affiliation)	Date: Time:	3. Received by (Signature/Affiliation)	Date: Time:

Comments: [29]

*See back of form for special instructions.

000190

6543

MCA 3/15/91

Quanterra Environmental Services

Quanterra Incorporated
5815 Middlebrook Pike
Knoxville, Tennessee 37921

615 588-6401 Telephone
615 584-4315 Fax

IT Air Quality Services
11499 Chester Road
Cincinnati, OH 45246
Attn: Dave Osterhout

October 17, 1994

Job Number: 1411

This is the Certificate of Analysis for the following samples:

Client Project ID:	FERMCO/332331
Date Received by Lab:	August 18, 1994
Number of Samples:	Thirteen (13)
Sample Type:	Air

I. Introduction

On August 18, 1994, thirteen (13) air samples arrived at Quanterra Environmental Services, Knoxville, Tennessee, from IT Air Quality Services, Cincinnati, Ohio. The list of analytical tests performed, as well as date of receipt and analysis, can be found in the attached report.

II. Analytical Results/Methodology

The analytical results for this report are presented by analytical test. Each set of data will include sample identification information and the analytical results.

The samples were analyzed for nitrogen oxides based on EPA method 7A.

Reviewed and Approved:

Kenneth Mueller
Project Manager

Quanterra Environmental Services

IT Air Quality Services
October 17, 1994

Client Project ID: FERMCO/332331

Job Number: 1411

III. Quality Control

Routine laboratory level I QC was followed.

NITROGEN OXIDE ANALYSIS

Results in μg

Sample Matrix: Air

Client Sample ID	Lab Sample ID	Result 1st Run	Result 2nd Run
Method Blank	AC2104	25 U	25 U
396A (Run V-N-1A)	AC0196	25 U	25 U
397A (Run V-N-1B)	AC0197	25 U	25 U
398A (Run V-N-1C)	AC0198	25 U	25 U
399A (Run V-N-1D)	AC0199	25 U	25 U
460A (Run V-N-2A)	AC0200	25 U	25 U
461A (Run V-N-2B)	AC0201	25 U	25 U
462A (Run V-N-2C)	AC0202	25 U	25 U
463A (Run V-N-2D)	AC0203	25 U	25 U
464A (Run V-N-3A)	AC0204	25 U	25 U
465A (Run V-N-3B)	AC0205	25 U	25 U
466A (Run V-N-3C)	AC0206	25 U	25 U
467A (Run V-N-3D)	AC0207	25 U	25 U
468 (Reagent Blank)	AC0208	25 U	25 U

Analysis Date: 10/04-05/94

U - Compound was analyzed for but not detected. The number is the detection limit for the sample.

INTERNATIONAL TECHNOLOGY CORPORATION

0000583

ANALYSIS REQUEST AND CHAIN OF CUSTODY RECORD*

WO # 1705

Reference Document No. 41937
Page 1 of 2

Project Name/No. 1 FERMCo/33233 1
Sample Team Members 2 Thress, Carls
Profit Center No. 3 3572
Project Manager 4 Osterhout
Purchase Order No. 6
Required Report Date 11

Samples Shipment Date 7
Lab Destination 8
Lab Contact 9
Project Contact/Phone 12 Osterhout 513-782-4700
Carrier/Waybill No. 13 9763969762

Bill to: 5
Report to: 10 Dave Osterhout IT-Cincinnati

ONE CONTAINER PER LINE

Sample Number 14	Sample Description/Type 15	Date/Time Collected 16	Container Type 17	Sample Volume 18	Pre-servative 19	Requested Testing Program 20	Condition on Receipt 21	Disposal Record No. 22
396A (Run V-N-1A)	NO_x reagent (H_2SO_4+H_2O_2)	8/14/94	Poly		None	Analyze for NO_x by IC per	Rec'd @ Ambient Temp w/ Custody Seals Intact BB 8/18/94	EPA 7A
397A (Run V-N-1B)								
398A (Run V-N-1C)								
399A (Run V-N-1D)								
460A (Run V-N-2A)								
461A (Run V-N-2B)								
462A (Run V-N-2C)								
463A (Run V-N-2D)								

FOR LAB USE ONLY

Special Instructions: 23

Possible Hazard Identification: 24
Non-hazard ☒ Flammable ☐ Skin Irritant ☐ Poison B ☐ Unknown ☐

Sample Disposal: 25
Return to Client ☐ Disposal by Lab ☒ Archive _____ (mos.)

Turnaround Time Required: 26
Normal ☐ Rush ☐

QC Level: 27
I. ☐ II. ☐ III. ☐ Project Specific (specify): _____

1. Relinquished by 28 (Signature/Affiliation) Greg Thress IT 8-1	Date: 8-10-94 Time: 1050	1. Received by 28 (Signature/Affiliation) Bryan Bomgardner QESKN	Date: 8/18/94 Time: 9:20
2. Relinquished by (Signature/Affiliation) Tim Miller FERMCO	Date: 8/16/94 Time: 1300	2. Received by (Signature/Affiliation)	Date: Time:
3. Relinquished by (Signature/Affiliation)	Date: Time:	3. Received by (Signature/Affiliation)	Date: Time:

Comments: 29

MCA 3/15/

C-79

0001194

6548

INTERNATIONAL TECHNOLOGY CORPORATION

ANALYSIS REQUEST AND CHAIN OF CUSTODY RECORD (cont.)*

WO# 1411

Reference Document No.[30] 41937

Page 2 of 2

Project Name FERMCo

Project No. 332331

Samples Shipment Date 8/16/94 / 1300

Tim Miller

ONE CONTAINER PER LINE

Sample[14] Number	Sample[15] Description/Type	Date/Time[16] Collected	Container[17] Type	Sample[18] Volume	Pre-[19] servative	Requested Testing[20] Program	Condition on[21] Receipt	Disposal[22] Record No.
464A (Run V-N-3A)	NOx reagent (H_2SO_4+H_2O_2)	8/4/94	Poly		None		Rec'd @ Ambient Temp. BJB 8/18/94	
465A (Run V-N-3B)								
466A (Run V-N-3C)								
467A (Run V-N-3D)								
468 (Reagent blank)								

000195

C-80

APPENDIX D

SAMPLING AND ANALYTICAL PROCEDURES

SAMPLING AND ANALYTICAL PROCEDURES

The sampling and analytical procedures for this test program are summarized in Table 1.

Table 1
Sampling and Analytical Plan

Parameter	Sampling and Analysis Method Reference	Number and Duration of Tests
Radionuclides	EPA Methods 5[a] and 114[b]	3 1-hour
Filterable particulate and metals (As, Ba, Be, Cd, Cr, Pb, Hg, Se, Ag)	EPA Method 5/BIF multi-metals method[c]	3 2-hour
Total fluorides	EPA Method 13B	3 1-hour
Hydrogen chloride	EPA Method 26	3 1-hour
Sulfur dioxide	EPA Method 6[a]	3 (6 20-minute samples)
Nitrogen oxides	EPA Method 7A[a]	3 (12 grab samples)
Carbon dioxide and oxygen	EPA Method 3,[a] Fyrite	3 1-hour
Carbon monoxide	Bag sample, personal carbon monoxide analyzer	3 1-hour
Total hydrocarbons	Bag sample, organic vapor analyzer	3 1-hour

[a] 40 CFR 60, Appendix A, July 1992.

[b] Total activity and total uranium; 40 CFR 61, Appendix B, July 1992.

[c] Methodology for the Determination of Metals Emissions in Exhaust Gases From Hazardous Waste Incineration and Similar Combustion Processes (Section 3.1 of the Methods Manual for Compliance with the BIF Regulations, EPA/530-SW-91-0100, December 1990).

Following particulate analysis, the sample fractions were digested, the digestates were combined, and the solution was analyzed for metals.

For radionuclides, the sample fractions were composited and analyzed for total activity and total uranium using procedures that generally follow EPA Method 114, with the exception of analysis for total uranium by laser phosphoremetry, which is not included in Method 114. The radionuclide analysis procedures are summarized in Table 2.

Table 2
Summary of Radiological Analysis Methods and Detection Limits

Parameter	Method[a]	Detection Limits
Total uranium	LP	1 μg/filter
Total activity		
• Gross alpha	GPC	10 pCi/filter
• Gross beta	GPC	10 pCi/filter
• Gamma isotopic	GS	20 pCi/filter

[a] GS = Gamma scan; LP = Laser phosphoremeter; GPC = Gas flow proportional counting.

IT's standard procedures for the test methods and a copy of EPA Method 114 are presented on the following pages.

DETERMINATION OF PARTICULATE AND METAL EMISSIONS

Sampling for filterable particulate matter and total metals (particulate and gaseous) emissions was conducted in accordance with the Methodology for the Determination of Trace Metal Emissions in Exhaust Gases From Stationary Source Combustion Processes* and that in Subsection 3.1 of the Methods Manual for Compliance with BIF Regulations.** The particulate determination in this method is consistent with EPA Method 5.***

Sampling Apparatus

The sampling train used in these tests is assembled by ITAQS personnel and meets all design specifications established by the U.S. EPA. The sampling apparatus consists of:

Nozzle - Borosilicate glass with an accurately measured round opening.

Probe - Borosilicate glass with a heating system capable of maintaining a minimum gas temperature of 250°F at the exit end during sampling.

Pitot Tube - A Type-S pitot tube that meets all geometric standards is used to measure gas velocity during each sampling run.

Temperature Gauge - Type-K thermocouple attached to the pitot tube in an interference-free arrangement to monitor stack gas temperature with a digital readout to within 1.5 percent Rankine.

Filter Holder - Pyrex glass with a heating system capable of maintaining a filter temperature of 250° ±25°F. A Teflon filter support is used.

Filter - 87-mm (3-in.)-diameter, Pallflex Type 2500 QAT-UP ultra-pure filter.

---

* EPA Draft Protocol, July 1988.

** EPA/530-SW-91-010, December 1990.

*** 40 CFR 60, Appendix A, July 1990.

Draft Gauge - An inclined manometer made by Dwyer with a readability of 0.01 in.H_2O in the 0- to 10-in.H_2O range is used.

Impingers - Five Greenburg-Smith design impingers connected in series with glass ball joints. The first, third, and fifth impingers are modified by removing the tip and extending the tube to within 1.3 cm (0.5 in.) of the bottom of the flask. For gas streams with high moisture contents, an optional empty impinger may be used before the first impinger as a condensate collector. An optional empty impinger may also be used as a condensate collector between the second and third impingers to avoid carryover into the permanganate solution.

Metering System - Vacuum gauge, leak-free pump, thermometers capable of measuring temperature to within 2.8°C (5°F), calibrated dry gas meter, and related equipment to maintain an isokinetic sampling rate and to determine sample to volume. The dry gas meter is made by Rockwell, and the fiber vane pump is made by Gast.

Barometer - Aneroid tube type to measure atmospheric pressures to ±2.5 mmHg (±0.1 in.Hg).

Sampling Procedure

Pallflex filters are desiccated for at least 24 hours and weighed to the nearest 0.1 mg on an analytical balance. One hundred mL of 5 percent nitric acid/10 percent hydrogen peroxide solution are placed in each of the first two impingers; if mercury is to be determined, the third and fourth impingers contain 100 mL of acidic potassium permanganate solution--otherwise the third and fourth impingers are not used; and the last impinger contains 200 to 400 g of silica gel.

The train is set up with the probe as shown in Figure PMM-1. If used, the empty condensate collector is placed before the first impinger or after the second impinger. The sampling train is leak-checked at the sampling site prior to each test run by plugging the inlet to the nozzle and pulling a 15-in.Hg vacuum, and at the conclusion of the test by plugging the inlet to the nozzle and pulling a vacuum equal to the highest vacuum reached during the test run.

The pitot tube and lines are leak-checked at the test site prior to and at the conclusion of each test run. This check is made by blowing into the impact opening of the pitot tube until 3 or more inches of water is recorded on the manometer and then capping the impact opening and holding it for 15 seconds to ensure that it is leak

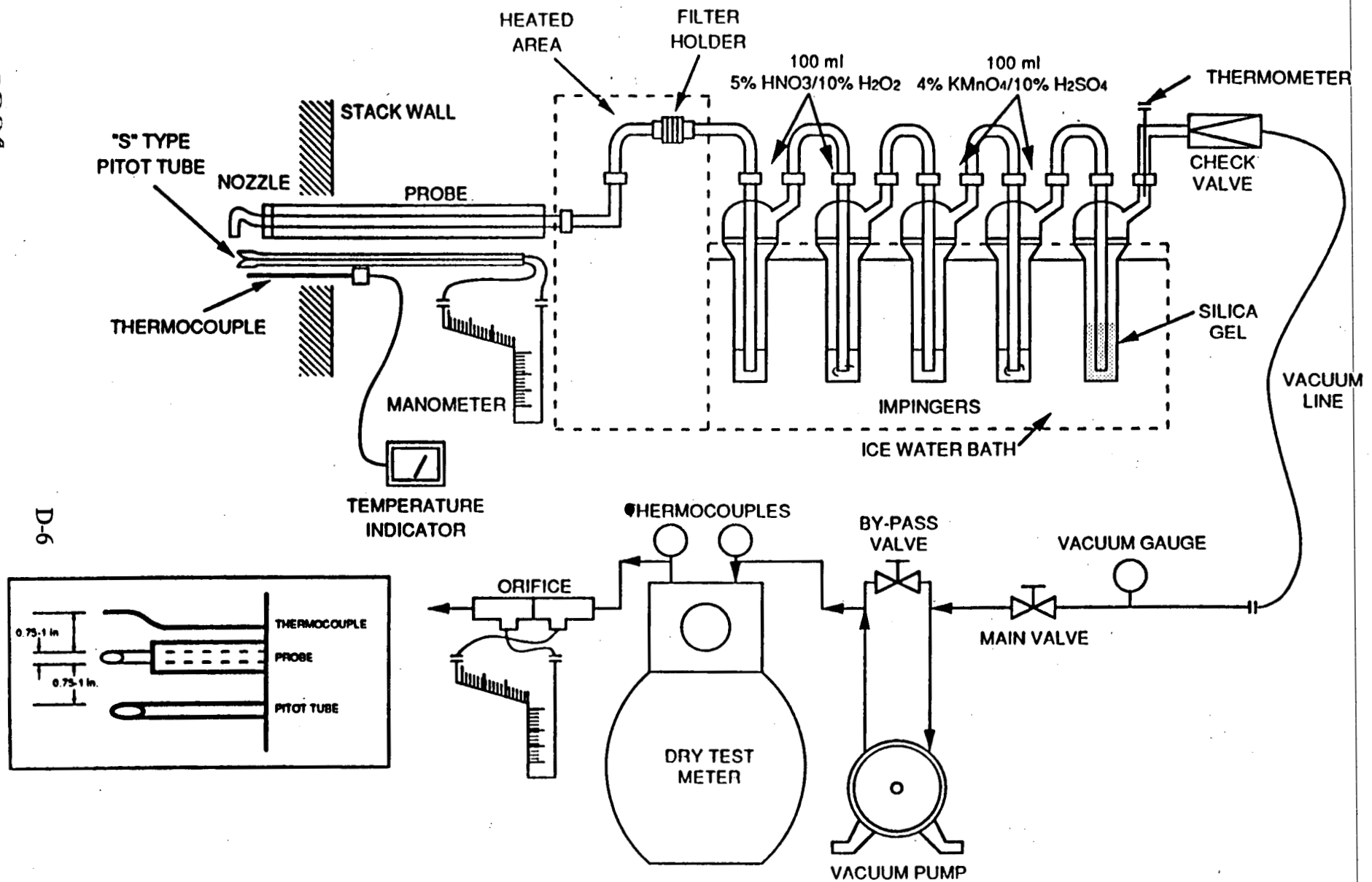

Figure PMM-1. Particulate/metals sampling train.

002001

free. The static-pressure side of the pitot tube is leak-checked by the same procedure, except suction is used to obtain the 3-in.H_2O manometer reading.

Crushed ice is placed around the impingers to keep the temperature of the gas leaving the last impinger at 68°F or less. During sampling, stack gas and sampling train data are recorded at each sampling point. Sampling rates are determined with the aid of a programmable calculator, and all sampling data are recorded on the Emission Testing Field Data Sheet.

Recovery Procedures

Upon completion of each sample run, the sampling train is allowed to cool and is then disassembled into sections. The probe and impinger sections are sealed and carefully transported to the cleanup area.

The amount of moisture collected is determined volumetrically using a graduated cylinder or by weighing each impinger before and after the sample run. After being weighed, the silica gel is discarded. Figure PMM-2 is a schematic of the sample recovery performed on the different sample fractions. The samples are recovered as follows:

Container No. 1 - The filter is placed into a petri dish, sealed, and labeled.

Container No. 2 - The filter holder, probe, and nozzle are rinsed with acetone to recover particulate. A nylon brush is used to remove particulate. The rinse is recovered in a glass jar.

Container No. 3 - The nozzle, probe, and filter holder front halves are rinsed with 0.1 N HNO_3 into a leak-free polyethylene container.

The contents of the first two impingers (and condensate collector if used) and a 0.1 N HNO_3 rinse of the filter holder backhalf and connecting glassware are placed in the same leak-free polyethylene container. The container is sealed and labeled, and the liquid level is marked.

Container No. 4 - The contents of the third and fourth impingers and an acidified potassium permanganate rinse are placed in an amber glass container. A final rinse with Type II water is added to the same container. The container is sealed and labeled, and the liquid level is marked. To prevent pressure buildup in the container, one of the following two procedures is used: 1) a small hole is drilled in the container lid (~1/16 in. dia.), or 2) the lid is left approximately

Title: PMM
Date: 3/15/93

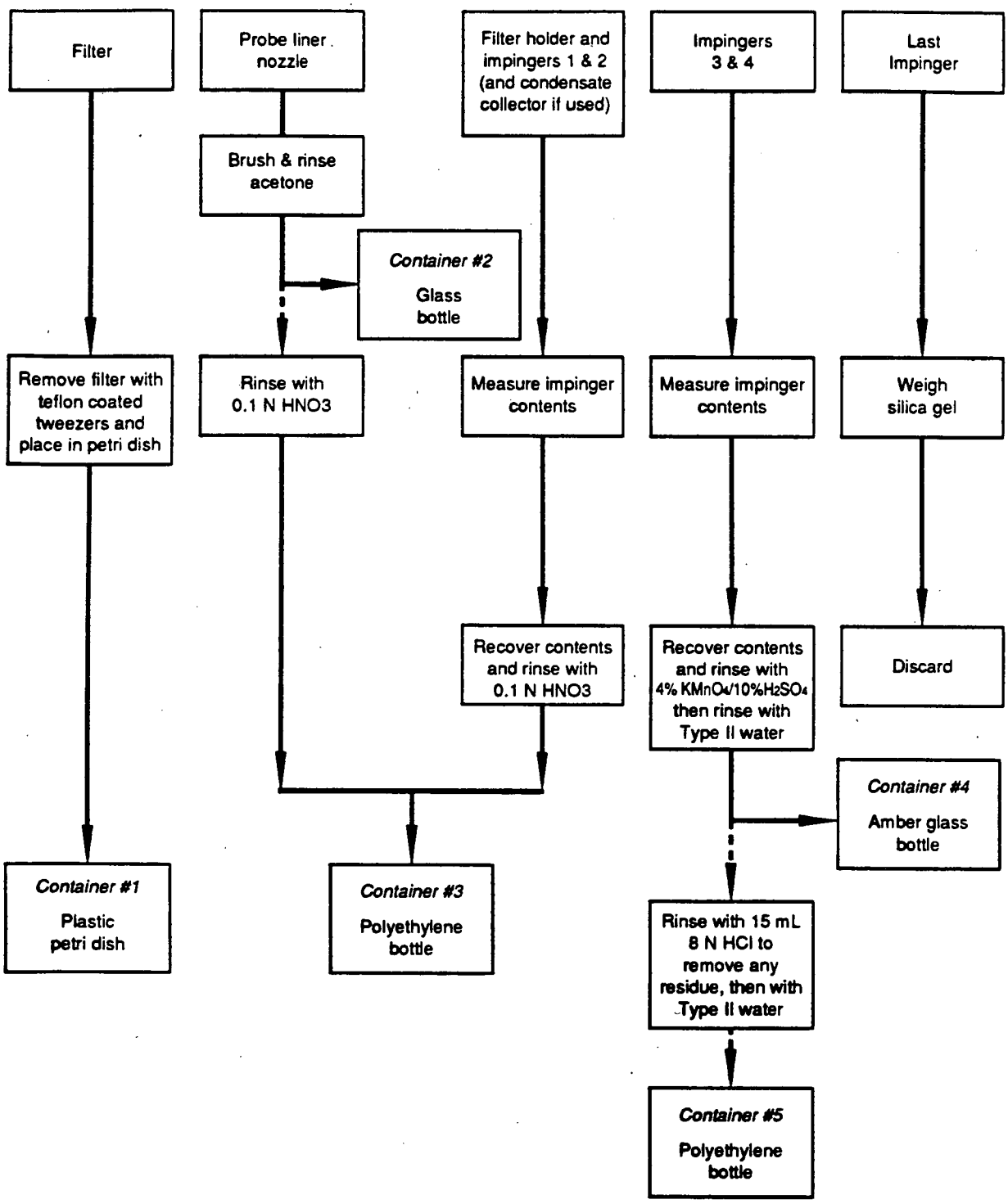

Figure PMM-2. Multimetals train recovery procedures.

000203

one-quarter turn from closed and is taped in position. In either case, the containers should be packed to maintain them in an upright position.

Container No. 5 - If a brown residue remains in the third and fourth impingers following the water rinse, 15 mL of 8 N HCl is measured in a graduated cylinder. Then 200 mL of Type II water is put in the empty polyethylene container. One impinger is rinsed with the HCl until the residue is removed, then the rinse is poured into the other impinger using a funnel. When the residue is removed, the HCl rinse is added to the water in Container 5. Both impingers are again rinsed with Type II water into Container 5.

Blanks of each reagent are taken in the field for preparation and analysis in a manner identical to that for the samples. The blanks consist of one or more of the following, depending upon the specific project requirements:

1) Field blank - A sampling train is set up, leak-checked, recovered, and analyzed as a sample.

2) Reagent blank - A sample of each reagent used is taken and analyzed either separately or by combining them in the same proportion as that used for samples.

3) Blank spike - A set of blank reagents is taken and combined in the same proportion as was used for the samples. Prior to analysis, the blank set is spiked with a known amount of each metal.

A diagram illustrating sample preparation and analysis procedures for each of the sample train components is shown in Figure PMM-3.

Sample Preparation and Analysis, Particulate

Container No. 1 - The filter and any loose particulate matter from this sample are placed into a tared weighing dish, desiccated for 24 hours to a constant weight, and weighed to the nearest 0.1 mg.

Container No. 2 - The acetone washings are transferred to a tared beaker and evaporated to dryness at ambient temperature and pressure, desiccated for 24 hours to a constant weight, and weighed to the nearest 0.1 mg.

Sample Preparation and Analysis, Metals

Container Nos. 1 and 2 - The filter with its filter catch and the acetone residue are divided into portions containing approximately 0.5 g each and placed into the analyst's choice of either individual microwave pressure-relief vessels or

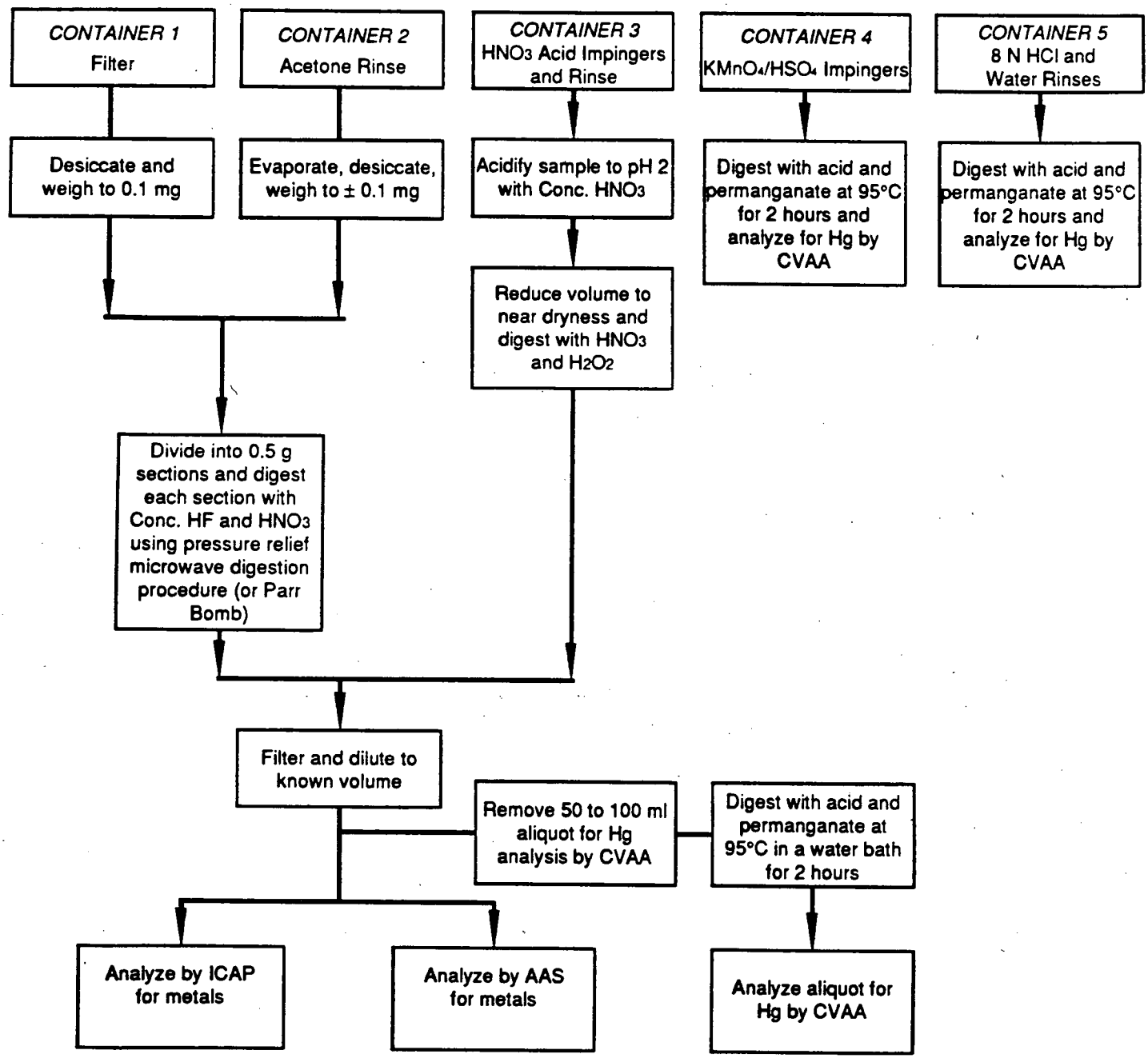

Figure PMM-3. Sample preparation and analysis scheme.

Parr® Bombs. Six mL of concentrated nitric acid and 4 mL of concentrated hydrofluoric acid are added to each vessel. For microwave heating, the sample vessels are microwaved for approximately 12 to 15 minutes (in intervals of 1 to 2 minutes) at 600 Watts. For conventional heating, the Parr Bombs are heated at 140°C (285°F) for 6 hours. The samples are then cooled to room temperature and combined with the acid-digested probe rinse.

Container No. 3 - If necessary, the pH of this sample is lowered to 2 with concentrated nitric acid. After pH adjustment, the sample is rinsed into a beaker with water, and the beaker is covered with a ribbed watchglass. The sample volume is reduced to approximately 20 mL by heating on a hot plate at a temperature just below boiling. The sample is then digested as follows:

a) 30 mL of 50 percent nitric acid is added to the sample, and the solution is heated for 30 minutes on a hot plate at a temperature just below boiling.

b) 10 mL of 3 percent hydrogen peroxide is added, and the solution is heated for an additional 10 minutes.

c) 50 mL of hot water is added, and the solution is heated for an additional 20 minutes.

After digestion, the remaining sample is combined with the contents of Container 1. This combined solution of the acid-digested filter, probe, and probe rinse and the impinger contents is filtered by using Whatman 541 filter paper.

The filtered solution is then divided into three fractions. The first fraction is analyzed by inductively coupled argon plasma emission spectroscopy (ICAP) in accordance with EPA Method 200.7 (40 CFR 136, Appendix C) which is the same as Method 6010 from SW 846.* The second fraction is analyzed by graphite furnace atomic absorption spectroscopy (AAS). The third fraction is then digested and analyzed for mercury by cold vapor atomic absorption (CVAA) spectroscopy.

The following list shows the methods normally used for each metal. The listed detection limits are shown in micrograms per sample; actual detection limits will vary depending on blank levels, any dilutions made to account for high levels of metals, or interferences. The detection limit for mercury includes the permanganate fraction.

---

* Test Methods for Evaluating Solid Waste: Physical/Chemical Methods, SW 846, Third Edition, September 1988.

	Normal procedure			Optional alternate procedure		
Metal	Method	No.*	Nominal detection limit, µg	Method	No.*	Nominal detection limit, µg
Antimony	ICAP	6010	30	AA	7041	2
Arsenic	AA	7060	0.3	-	-	-
Barium	ICAP	6010	0.5	-	-	-
Beryllium	ICAP	6010	0.7	-	-	-
Cadmium	ICAP	6010	1	-	-	-
Chromium	ICAP	6010	3	-	-	-
Copper	-	-	-	ICAP	6010	3
Lead	AA	7421	0.4	ICAP	6010	60
Nickel	-	-	-	ICAP	6010	10
Manganese	-	-	-	ICAP	6010	1
Mercury	AA	7470	0.2	-	-	-
Selenium	-	-	-	AA	7740	0.5
Silver	AA	7761	0.1	-	-	-
Thallium	ICAP	6010	120	AA	7841	0.7
Zinc	-	-	-	ICAP	6010	4

Container No. 4 - A known aliquot of the sample is taken and diluted to approximately 120 mL with mercury-free water. Approximately 15 mL of 50 percent potassium permanganate solution, 5 mL of 50 percent nitric acid, 5 mL of concentrated sulfuric acid, and 9 mL of 5 percent potassium sulfate are added to the sample. The sample is then heated for 2 hours at 95°C in a convection oven or water bath. After cooling, 5 mL of hydroxylamine hydrochloride solution is added and mixed with the sample. Then 7 mL of stannous chloride is added and the sample is analyzed for mercury by CVAA spectroscopy.

Container No. 5 - Analysis of this sample for mercury depends on project requirements; it may be retained for potential analysis, it may be combined with the same fraction from other runs for one analysis, the sample from one run may be analyzed to confirm the absence of mercury, or each sample may be analyzed for mercury. If analyzed, the procedures are the same as for Container 4.

Normal analytical quality assurance measures include daily full instrument calibration (ICAP is a zero and standard; AAS is a zero and minimum three standards), analysis of a method blank, analysis of a laboratory control sample (LCS, a method blank spiked with a known quantity of each metal), analysis of one sample by ICAP in duplicate, performance of all AAS analyses in duplicate, and performance of a post-digestion spike for each metal analyzed by AAS. For specific projects, a matrix spike may be designated for mercury in the permanganate fraction.

* Test Methods for Evaluating Solid Waste: Physical/Chemical Methods, SW 846, Third Edition, September 1988.

DETERMINATION OF PARTICULATE EMISSIONS BY EPA METHOD 5 WITH BACK-HALF ANALYSIS

The sampling procedures followed during this test program are those described in EPA Method 5,* but modified to include analysis of the impinger solution.

Sampling Apparatus

The particulate sampling train used at the exit stack during these tests meets design specifications established by the Federal EPA. Assembled by ITAQS personnel, it consists of the following:

Nozzle - Stainless steel (316) with sharp, tapered, leading edge and accurately measured round opening.

Probe - Borosilicate glass with a heating system capable of maintaining a gas temperature of 248 ±25°F at the exit end during sampling.

Pitot Tube - A Type-S pitot tube that meets all geometric standards; attached to the probe to monitor stack gas velocity.

Filter Holder - Pyrex glass with a heating system capable of maintaining a filter temperature of 248 ±25°F.

Filter - Whatman Reeve Angel 934 AH glass-fiber, 3-in.-diameter.

Draft Gauge - A dual-inclined manometer made by Dwyer with a readability of 0.01 in.H_2O in the 0- to 1-in. range and 0.1 in.H_2O in the 1- to 10-in. range.

Temperature Gauge - Type-K thermocouple attached to the pitot tube in an interference-free arrangement to monitor stack gas temperature with a digital readout to within 1.5 percent Rankine.

---

* 40 CFR 60, Appendix A, July 1990.

Impingers--Four impingers connected in series with glass ball joints. The first, third, and fourth impingers are of the Greenburg-Smith design, modified by replacing the tip with a ½-in.-i.d. glass tube extending to ½-in. from the bottom of the flask.

Metering System - Vacuum gauge, leak-free pump, thermometers capable of measuring temperature to within 5°F, dry gas meter with 2 percent accuracy, and related equipment to maintain an isokinetic sampling rate and to determine sample volume. The dry gas meter is made by Rockwell and the fiber vane pump is made by Gast.

Barometer - Aneroid type to measure atmospheric pressure to ±0.1 in.Hg.

Sampling Procedure

After the sampling site and the minimum number of traverse points are selected, the stack pressure, temperature, composition (percent CO_2 and percent O_2 by volume), moisture, and range of velocity head are measured according to procedures described in EPA Methods 1 through 4.*

Approximately 200 grams of silica gel is weighed and placed in a sealed impinger prior to each test. Glass-fiber filters are desiccated for at least 24 hours and weighed to the nearest 0.1 mg on an analytical balance. One hundred milliliters (mL) of distilled water is placed in each of the first two impingers; the third impinger is initially empty; and the fourth impinger contains silica gel. The train is set up with the probe as shown in Figure M5BH-1. The sampling train is leak-checked at the sampling site prior to each test run by plugging the inlet to the nozzle and pulling a 15-in.Hg vacuum; and at the conclusion of the test, by plugging the inlet to the nozzle and pulling a vacuum equal to the highest vacuum reached during the test run.

The pitot tube and lines are leak-checked at the test site prior to and at the conclusion of each test run. The check is made by blowing into the impact opening of the pitot tube until 3 or more inches of water is recorded on the manometer and then capping the impact opening and holding it for 15 seconds to assure it is leak-free. The static pressure side of the pitot tube is leak-checked by the same procedure,

* 40 CFR 60, Appendix A, July 1990.

Title: M5BH
Date: 3/15/93

DRAWING BY	CHECKED BY	APPROVED BY	DRAWING NO.
			M-5677-1291-1

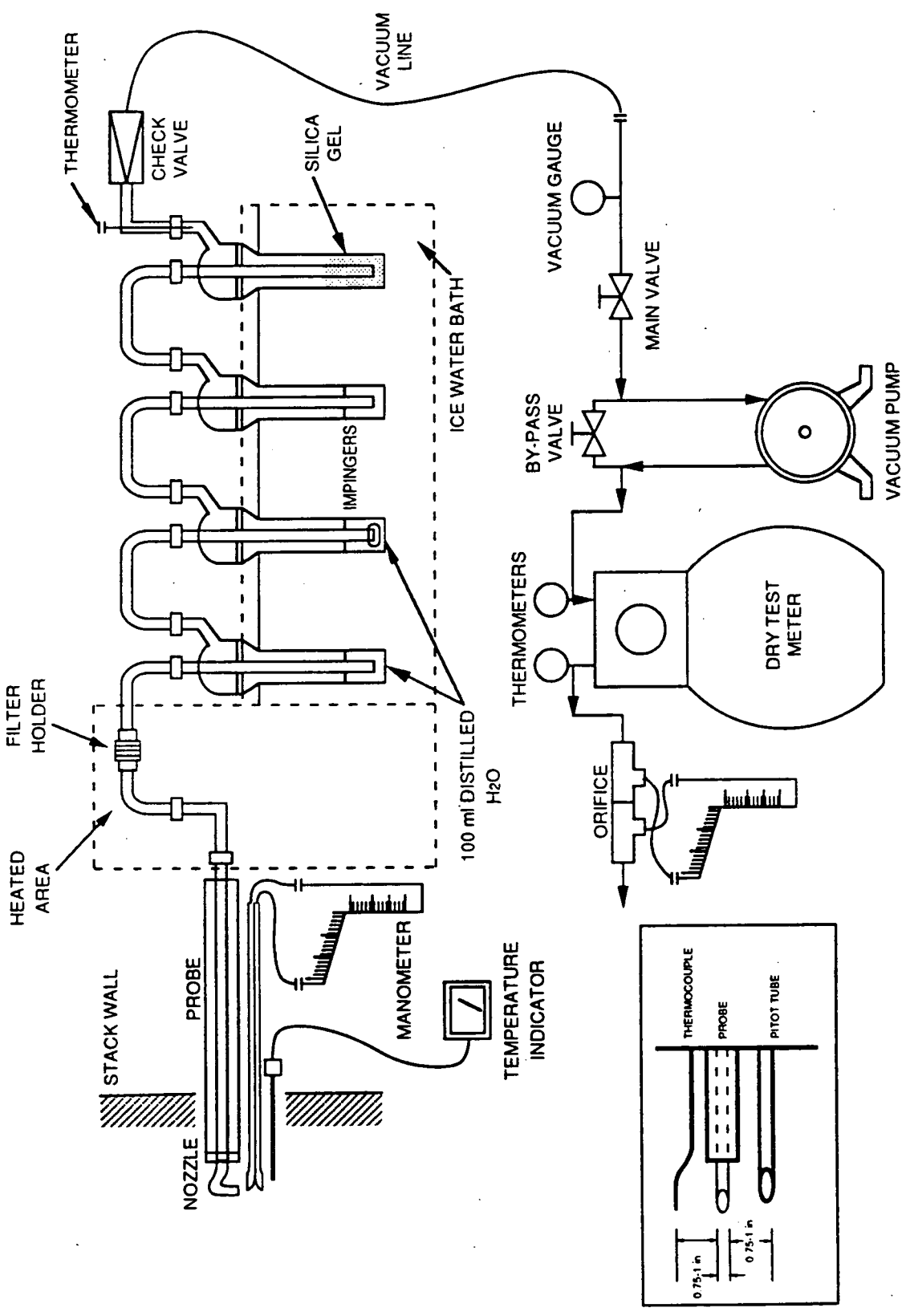

Figure M5BH-1
Particulate sampling train.

INTERNATIONAL TECHNOLOGY CORPORATION

except suction is used to obtain the 3-in. H_2O manometer reading. Crushed ice is placed around the impingers to keep the temperature of the gases leaving the last impinger at 68°F or less.

During sampling, stack gas and sampling train data are recorded at each sampling point and whenever significant changes occur in stack flow conditions. Isokinetic sampling rates are set throughout the sampling period with the aid of a calculator. All sampling data are recorded on the Particulate Field Data Sheet.

Sample Recovery Procedure

The sampling train is moved carefully from the test site to the cleanup area. The volume of water from the first three impingers is measured, and sample fractions are recovered as follows:

Container No. 1 - The filter is removed from its holder and placed in a petri dish and sealed.

Container No. 2 - Loose particulate and acetone washings from all sample-exposed surfaces prior to the filter are placed in a polyethylene or amber glass container, sealed, and labeled. Particulate is removed from the probe with the aid of a nylon brush. The liquid level is marked after the container is sealed.

Container No. 3 - Distilled H_2O in the impinger section of the sampling train is placed in a polyethylene or amber glass container. The impingers and connecting glassware are rinsed with distilled H_2O, and this rinse is added to the container for shipment to the laboratory.

The silica gel from the fourth impinger is weighed, and this value is recorded on the Sample Recovery and Integrity Sheet along with other pertinent data. An unused filter and a minimum of 200 mL each of acetone and distilled water are taken as blanks.

Analytical Procedures

The analytical procedures followed during this program are those described in EPA Method 5.*

Container No. 1 - The filter and any loose particulate matter from this sample container are placed in a tared glass weighing dish, desiccated for 24 hours to a constant weight, and weighed to the nearest 0.1 mg.

Container No. 2 - The acetone washings are transferred to a tared beaker and evaporated to dryness at ambient temperature and pressure, desiccated for 24 hours to a constant weight, and weighed to the nearest 0.1 mg.

Container No. 3 - The contents of this container are transferred to a tared beaker and evaporated to dryness at 105°C, desiccated for 24 hours to a constant weight, and weighed to the nearest 0.1 mg.

The filter, acetone, and water blanks are analyzed in the same way as their respective sample fractions.

The term "constant weight" means a difference of no more than 0.5 mg or 1 percent of total weight less tare weight, whichever is greater between two consecutive readings, with no less than 6 hours of desiccation between weighings. All analytical data are recorded on the Analytical Particulate Data Sheet. Acetone blank data are recorded on the Acetone Blank Data Sheet. Water blank data are recorded on the Water Blank Data Sheet.

* 40 CFR 60, Appendix A, July 1990.

8.2 Add 20 ml of 1 M HCl to each of six 150 ml beakers.

8.3 Add 1.0 ml of lanthanum carrier, 0.1 mg lanthanum per ml, to the acid solution in each beaker.

8.4 Add 1.0 ml of the actinide solution from Section 8.1 to each beaker.

8.5 Add 5.0 ml of 3 M HF to each beaker.

8.6 Cover beakers and allow solutions to stand for a minimum of 30 minutes.

8.7 Filter each solution through a filter membrane using the suction filter apparatus.

8.8 After each filtration, wash membrane with 10 ml of distilled water and 5 ml of ethanol.

8.9 Allow filter membrane to dry on filter apparatus.

8.10 Carefully remove filter membrane and mount with double-side tape on the inner surface of a planchet. Mount filter with filtration side up.

8.11 Place planchet in internal proportional counter and count for 100 minutes.

8.12 The counting efficiency of the internal proportional counter is determined as follows from the six samples:

$$E_B = \frac{C_S - C_B}{2.22\ A_A\ T} \qquad \text{Eq. 111-8}$$

where:

E_I=counting efficiency of proportional counter, counts per minute per disintegration per minute.

C_S=gross counts of standard.

C_B=gross counts of procedure background.

2.22=disintegrations per minute per picocurie.

A_A=picocuries of actinide added.

T=counting time in minutes, specified in Section 8.11 as 100 minutes.

8.13 Determine the average counting efficiency of the six determinations.

9.0 *Quality Assurance*

9.1 General Requirements.

9.1.1 All analysts using this method are required to demonstrate their ability to use the method and to define their respective accuracy and precision criteria.

9.2 Specific Requirements.

9.2.1 Each sample will be analyzed in duplicate.

9.2.2 Every tenth sample will be an externally prepared performance evaluation sample submitted by the Quality Assurance Officer.

9.2.3 Duplicate measurements are considered acceptable when the difference between them is less than two standard deviations as described in EPA 600/4-77-001 or subsequent revisions.

METHOD 114—TEST METHODS FOR MEASURING RADIONUCLIDE EMISSIONS FROM STATIONARY SOURCES

1. *Purpose and Background*

This method provides the requirements for: (1) Stack monitoring and sample collection methods appropriate for radionuclides; (2) radiochemical methods which are used in determining the amounts of radionuclides collected by the stack sampling and; (3) quality assurance methods which are conducted in conjunction with these measurements. These methods are appropriate for emissions for stationary sources. A list of references is provided.

Many different types of facilities release radionuclides into air. These radionuclides differ in the chemical and physical forms, half-lives and type of radiation emitted. The appropriate combination of sample extraction, collection and analysis for an individual radionuclide is dependent upon many interrelated factors including the mixture of other radionuclides present. Because of this wide range of conditions, no single method for monitoring or sample collection and analysis of a radionuclide is applicable to all types of facilities. Therefore, a series of methods based on "principles of measurement" are described for monitoring and sample collection and analysis which are applicable to the measurement of radionuclides found in effluent streams at stationary sources. This approach provides the user with the flexibility to choose the most appropriate combination of monitoring and sample collection and analysis methods which are applicable to the effluent stream to be measured.

2. *Stack Monitoring and Sample Collection Methods*

Monitoring and sample collection methods are described based on "principles of monitoring and sample collection" which are applicable to the measurement of radionuclides from effluent streams at stationary sources. Radionuclides of most elements will be in the particulate form in these effluent streams and can be readily collected using a suitable filter media. Radionuclides of hydrogen, oxygen, carbon, nitrogen, the noble gases and in some circumstances iodine will be in the gaseous form. Radionuclides of these elements will require either the use of an in-line or off-line monitor to directly measure the radionuclides, or suitable sorbers, condensers or bubblers to collect the radionuclides.

2.1 Radionuclides as Particulates. The extracted effluent stream is passed through a filter media to remove the particulates. The filter must have a high efficiency for removal of sub-micron particles. The guidance in ANSI N13.1-1969 shall be followed in using filter media to collect particulates (incorporated by reference-see §61.18).

2.2 Radionuclides as Gases.

2.2.1 The Radionuclide Tritium (H-3). Tritium in the form of water vapor is collected from the extracted effluent sample by sorption, condensation or dissolution techniques. Appropriate collectors may include silica gel, molecular sieves, and ethylene glycol or water bubblers.

Tritium in the gaseous form may be measured directly in the sample stream using Method B-1, collected as a gas sample or may be oxidized using a metal catalyst to tritiated water and collected as described above.

2.2.2 Radionuclides of Iodine. Iodine is collected from an extracted sample by sorption or dissolution techniques. Appropriate collectors may include charcoal, impregnated charcoal, metal zeolite and caustic solutions.

2.2.3 Radionuclides of Argon, Krypton and Xenon. Radionuclides of these elements are either measured directly by an in-line or off-line monitor, or are collected from the extracted sample by low temperature sorption techniques, Appropriate sorbers may include charcoal or metal zeolite.

2.2.4 Radionuclides of Oxygen, Carbon, Nitrogen and Radon. Radionuclides of these elements are measured directly using an in-line or off-line monitor. Radionuclides of carbon in the form of carbon dioxide may be collected by dissolution in caustic solutions.

2.3 Definition of Terms

In-line monitor means a continuous measurement system in which the detector is placed directly in or adjacent to the effluent stream. This may involve either gross radioactivity measurements or specific radionuclide measurements. Gross

[Part 61, Appendix B, Method 114]

6543

measurements shall be made in conformance with the conditions specified in Methods A-4, B-2 and G-4.

Off-line monitor means a measurement system in which the detector is used to continuously measure an extracted sample of the effluent stream. This may involve either gross radioactivity measurements or specific radionuclide measurements. Gross measurements shall be made in conformance with the conditions specified in Methods A-4, B-2 and G-4.

Sample collection means a procedure in which the radionuclides are removed from an extracted sample of the effluent using a collection media. These collection media include filters, absorbers, bubblers and condensers. The collected sample is analyzed using the methods described in Section 3.

3. *Radionuclide Analysis Methods*

A series of methods based on "principles of measurement" are described which are applicable to the analysis of radionuclides collected from airborne effluent streams at stationary sources. These methods are applicable only under the conditions stated and within the limitations described. Some methods specify that only a single radionuclide be present in the sample or the chemically separated sample. This condition should be interpreted to mean that no other radionuclides are present in quantities which would interfere with the measurement.

Also identified (Table 1) are methods for a selected list of radionuclides. The listed radionuclides are those which are most commonly used and which have the greatest potential for causing dose to members of the public. Use of methods based on principles of measurement other than those described in this section must be approved in advance of use by the Administrator. For radionuclides not listed in Table 1, any of the described methods may be used provided the user can demonstrate that the applicability conditions of the method have been met.

The type of method applicable to the analysis of a radionuclide is dependent upon the type of radiation emitted, i.e., alpha, beta or gamma. Therefore, the methods described below are grouped according to principles of measurements for the analysis of alpha, beta and gamma emitting radionuclides.

3.1 Methods for Alpha Emitting Radionuclides

3.1.1 Method A-1, Radiochemistry-Alpha Spectrometry.

Principle: The element of interest is separated from other elements, and from the sample matrix using radiochemical techniques. The procedure may involve precipitation, ion exchange, or solvent extraction. Carriers (elements chemically similar to the element of interest) may be used. The element is deposited on a planchet in a very thin film by electrodeposition or by coprecipitation on a very small amount of carrier, such as lanthanum fluoride. The deposited element is then counted with an alpha spectrometer. The activity of the nuclide of interest is measured by the number of alpha counts in the appropriate energy region. A correction for chemical yield and counting efficiency is made using a standardized radioactive nuclide (tracer) of the same element. If a radioactive tracer is not available for the element of interest, a predetermined chemical yield factor may be used.

Applicability: This method is applicable for determining the activity of any alpha-emitting radionuclide, regardless of what other radionuclides are present in the sample provided the chemical separation step produces a very thin sample and removes all other radionuclides which could interfere in the spectral region of interest. APHA-605(2), ASTM-D-3972(13).

3.1.2 Method A-2, Radiochemistry-Alpha Counting.

Principle: The element of interest is separated from other elements, and from the sample matrix using radiochemistry. The procedure may involve precipitation, ion exchange, or solvent extraction. Carriers (elements chemically similar to the element of interest) may be used. The element is deposited on a planchet in a thin film and counted with a alpha counter. A correction for chemical yield (if necessary) is made. The alpha count rate measures the total activity of all emitting radionuclides of the separated element.

Applicability: This method is applicable for the measurement of any alpha-emitting radionuclide, provided no other alpha emitting radionuclide is present in the separated sample. It may also be applicable for determining compliance, when other radionuclides of the separated element are present, provided that the calculated emission rate is assigned to the radionuclide which could be present in the sample that has the highest dose conversion factor. IDO-12096(18).

3.1.3 Method A-3, Direct Alpha Spectrometry.

Principle: The sample, collected on a suitable filter, is counted directly on an alpha spectrometer. The sample must be thin enough and collected on the surface of the filter so that any absorption of alpha particle energy in the sample or the filter, which would degrade the spectrum, is minimal.

Applicability: This method is applicable to simple mixtures of alpha emitting radionuclides and only when the amount of particulates collected on the filter paper are relatively small and the alpha spectra is adequately resolved. Resolutions should be 50 keV (FWHM) or better, ASTM-D-3084(16).

3.1.4 Method A-4, Direct Alpha Counting (Gross alpha determination).

Principle: The sample, collected on a suitable filter, is counted with an alpha counter. The sample must be thin enough so that self-absorption is not significant and the filter must be of such a nature that the particles are retained on the surface.

Applicability: Gross alpha determinations may be used to measure emissions of specific radionuclides only (1) when it is known that the sample contains only a single radionuclide, or the identity and isotopic ratio of the radionuclides in the sample are well-known, and (2) measurements using either Method A-1, A-2 or A-5 have shown that this method provides a reasonably accurate measurement of the emission rate. Gross alpha measurements are applicable to unidentified mixtures of radionuclides only for the purposes and under the conditions described in section 3.7. APHA-601(3), ASTM-D-1943(10).

3.1.5 Method A-5, Chemical Determination of Uranium.

Principle: Uranium may be measured chemically by either colorimetry or fluorometry. In both procedures, the sample is dissolved, the uranium is oxidized to the hexavalent form and extracted into a suitable solvent. Impurities are removed from the solvent layer. For colorimetry, dibenzoylmethane is added, and the uranium is measured by the absorbance in a colorimeter. For fluorometry, a portion of the solution is fused with a sodium fluoride-lithium fluoride flux and the uranium

[Part 61, Appendix B, Method 114]

Copyright © 1993 by The Bureau of National Affairs, Inc.
0013-9211/93/$0+$1.00

is determined by the ultraviolet activated fluorescence of the fused disk in a fluorometer.

Applicability: This method is applicable to the measurements of emission rates of uranium when the isotopic ratio of the uranium radionuclides is well known. ASTM-E-318(15), ASTM-D-2907(14).

3.1.6 Method A-6, Radon-222-Continuous Gas Monitor.

Principle: Radon-222 is measured directly in a continuously extracted sample stream by passing the air stream through a calibrated scintillation cell. Prior to the scintillation cell, the air stream is treated to remove particulates and excess moisture. The alpha particles from radon-222 and its decay products strike a zinc sulfide coating on the inside of the scintillation cell producing light pulses. The light pulses are detected by a photomultiplier tube which generates electrical pulses. These pulses are processed by the system electronics and the read out is in pCi/l of radon-222.

Applicability: This method is applicable to the measurement of radon-222 in effluent streams which do not contain significant quantities of radon-220. Users of this method should calibrate the monitor in a radon calibration chamber at least twice per year. The background of the monitor should also be checked periodically by operating the instrument in a low radon environment. EPA 520/1-89-009(24).

3.1.7 Method A-7, Radon-222-Alpha Track Detectors

Principle: Radon-222 is measured directly in the effluent stream using alpha track detectors (ATD). The alpha particles emitted by radon-222 and its decay products strike a small plastic strip and produce submicron damage tracks. The plastic strip is placed in a caustic solution that accentuates the damage tracks which are counted using a microscope or automatic counting system. The number of tracks per unit area is correlated to the radon concentration in air using a conversion factor derived from data generated in a radon calibration facility.

Applicability: Prior approval from EPA is required for use of this method. This method is only applicable to effluent streams which do not contain significant quantities of radon-220, unless special detectors are used to discriminate against radon-220. This method may be used only when ATDs have been demonstrated to produce data comparable to data obtained with Method A-6. Such data should be submitted to EPA when requesting approval for the use of this method. EPA 520/1-89-009(24).

3.2 Methods for Gaseous Beta Emitting Radionuclides.

3.2.1 Method B-1, Direct Counting in Flow-Through Ionization Chambers.

Principle: An ionization chamber containing a specific volume of gas which flows at a given flow rate through the chamber is used. The sample (effluent stream sample) acts as the counting gas for the chamber. The activity of the radionuclide is determined from the current measured in the ionization chamber.

Applicability: This method is applicable for measuring the activity of a gaseous beta-emitting radionuclide in an effluent stream that is suitable as a counting gas, when no other beta-emitting nuclides are present. DOE/EP-0096(17), NCRP-58(23).

3.2.2 Method B-2, Direct Counting With In-line or Off-line Beta Detectors.

Principle: The beta detector is placed directly in the effluent stream (in-line) or an extracted sample of the effluent stream is passed through a chamber containing a beta detector (off-line). The activities of the radionuclides present in the effluent stream are determined from the beta count rate, and a knowledge of the radionuclides present and the relationship of the gross beta count rate and the specific radionuclide concentration.

Applicability: This method is applicable only to radionuclides with maximum beta particle energies greater then 0.2 MeV. This method may be used to measure emissions of specific radionuclides only when it is known that the sample contains only a single radionuclide or the identity and isotopic ratio of the radionuclides in the effluent stream are well known. Specific radionuclide analysis of periodic grab samples may be used to identify the types and quantities of radionuclides present and to establish the relationship between specific radionuclide analysis and gross beta count rates.

This method is applicable to unidentified mixtures of gaseous radionuclides only for the purposes and under the conditions described in section 3.7.

3.3 Methods for Non-Gaseous Beta Emitting Radionuclides.

3.3.1 Method B-3, Radiochemistry-Beta Counting.

Principle: The element of interest is separated from other elements, and from the sample matrix by radiochemistry. This may involve precipitation, distillation, ion exchange, or solvent extraction. Carriers (elements chemically similar to the element of interest) may be used. The element is deposited on a planchet, and counted with a beta counter. Corrections for chemical yield, and decay (if necessary) are made. The beta count rate determines the total activity of all radionuclides of the separated element. This method may also involve the radiochemical separation and counting of a daughter element, after a suitable period of ingrowth, in which case it is specific for the parent nuclide.

Applicability: This method is applicable for measuring the activity of any beta-emitting radionuclide, with a maximum energy greater than 0.2 MeV, provided no other radionuclide is present in the separated sample. APHA-608(5).

3.3.2 Method B-4, Direct Beta Counting (Gross beta determination).

Principle: The sample, collected on a suitable filter, is counted with a beta counter. The sample must be thin enough so that self-absorption corrections can be made.

Applicability: Gross beta measurements are applicable only to radionuclides with maximum beta particle energies greater than 0.2 MeV. Gross beta measurements may be used to measure emissions of specific radionuclides only (1) when it is known that the sample contains only a single radionuclide, and (2) measurements made using Method B-3 show reasonable agreement with the gross beta measurement. Gross beta measurements are applicable to mixtures of radionuclides only for the purposes and under the conditions described in section 3.7. APHA-602(4), ASTM-D-1890(11).

3.3.3 Method B-5, Liquid Scintillation Spectrometry.

Principle: An aliquot of a collected sample or the result of some other chemical separation or processing technique is added to a liquid scintillation cocktail" which is viewed by photomultiplier tubes in a liquid scintillation spectrometer. The spectrometer is adjusted to establish a channel or window" for the pulse energy appropriate to the nuclide of interest. The

[Part 61, Appendix B, Method 114]

activity of the nuclide of interest is measured by the counting rate in the appropriate energy channel. Corrections are made for chemical yield where separations are made.

Applicability: This method is applicable to any beta-emitting nuclide when no other radionuclide is present in the sample or the separated sample provided that it can be incorporated in the scintillation cocktail. This method is also applicable for samples which contain more than one radionuclide but only when the energies of the beta particles are sufficiently separated so that they can be resolved by the spectrometer. This method is most applicable to the measurement of low-energy beta emitters such as tritium and carbon-14. APHA-609(6), EML-LV-539-17(19).

3.4 Gamma Emitting Radionuclides

3.4.1 Method G-1, High Resolution Gamma Spectrometry.

Principle: The sample is counted with a high resolution gamma detector, usually either a Ge(Li) or a high purity Ge detector, connected to a multichannel analyzer or computer. The gamma emitting radionuclides in the sample are measured from the gamma count rates in the energy regions characteristic of the individual radionuclide. Corrections are made for counts contributed by other radionuclides to the spectral regions of the radionuclides of interest. Radiochemical separations may be made prior to counting but are usually not necessary.

Applicability: This method is applicable to the measurement of any gamma emitting radionuclide with gamma energies greater than 20 keV. It can be applied to complex mixtures of radionuclides. The samples counted may be in the form of particulate filters, absorbers, liquids or gases. The method may also be applied to the analysis of gaseous gamma emitting radionuclides directly in an effluent stream by passing the stream through a chamber or cell containing the detector. ASTM-3649(9), IDO-12096(18).

3.4.2 Method G-2, Low Resolution Gamma Spectrometry.

Principle: The sample is counted with a low resolution gamma detector, a thallium activated sodium iodide crystal. The detector is coupled to a photomultiplier tube and connected to a multichannel analyzer. The gamma emitting radionuclides in the sample are measured from the gamma count rates in the energy regions characteristic of the individual radionuclides. Corrections are made for counts contributed by other radionuclides to the spectral regions of the radionuclides of interest. Radiochemical separation may be used prior to counting to obtain less complex gamma spectra if needed.

Applicability: This method is applicable to the measurement of gamma emitting radionuclides with energies greater than 100 keV. It can be applied only to relatively simple mixtures of gamma emitting radionuclides. The samples counted may be in the form of particulate filters, absorbers, liquids or gas. The method can be applied to the analysis of gaseous radionuclides directly in an effluent stream by passing the gas stream through a chamber or cell containing the detector. ASTM-D-2459(12), EMSL-LV-0539-17(19).

3.4.3 Method G-3, Single Channel Gamma Spectrometry.

Principle: The sample is counted with a thallium activated sodium iodide crystal. The detector is coupled to a photomultiplier tube connected to a single channel analyzer. The activity of a gamma emitting radionuclide is determined from the gamma counts in the energy range for which the counter is set.

Applicability: This method is applicable to the measurement of a single gamma emitting radionuclide. It is not applicable to mixtures of radionuclides. The samples counted may be in the form of particulate filters, absorbers, liquids or gas. The method can be applied to the analysis of gaseous radionuclides directly in an effluent stream by passing the gas stream through a chamber or cell containing the detector.

3.4.4 Method G-4, Gross Gamma Counting.

Principle: The sample is counted with a gamma detector usually a thallium activated sodium iodine crystal. The detector is coupled to a photomultiplier tube and gamma rays above a specific threshold energy level are counted.

Applicability: Gross gamma measurements may be used to measure emissions of specific radionuclides only when it is known that the sample contains a single radionuclide or the identity and isotopic ratio of the radionuclides in the effluent stream are well known. When gross gamma measurements are used to determine emissions of specific radionuclides periodic measurements using Methods G-1 or G-2 should be made to demonstrate that the gross gamma measurements provide reliable emission data. This method may be applied to analysis of gaseous radionuclides directly in an effluent stream by placing the detector directly in or adjacent to the effluent stream or passing an extracted sample of the effluent stream through a chamber or cell containing the detector.

3.5 Counting Methods. All of the above methods with the exception of Method A-5 involve counting the radiation emitted by the radionuclide. Counting methods applicable to the measurement of alpha, beta and gamma radiations are listed below. The equipment needed and the counting principles involved are described in detail in ASTM-3648(8).

3.5.1 Alpha Counting:

- *Gas Flow Proportional Counters.* The alpha particles cause ionization in the counting gas and the resulting electrical pulses are counted. These counters may be windowless or have very thin windows.
- *Scintillation Counters.* The alpha particles transfer energy to a scintillator resulting in a production of light photons which strike a photomultiplier tube converting the light photons to electrical pulses which are counted. The counters may involve the use of solid scintillation materials such as zinc sulfide or liquid scintillation solutions.
- *Solid-State Counters.* Semiconductor materials, such as silicon surface-barrier p-n junctions, act as solid ionization chambers. The alpha particles interact which the detector producing electron hole pairs. The charged pair is collected by an applied electrical field and the resulting electrical pulses are counted.
- *Alpha Spectrometers.* Semiconductor detectors used in conjunction with multichannel analyzers for energy discrimination.

3.5.2 Beta Counting:

- *Ionization Chambers.* These chambers contain the beta-emitting nuclide in gaseous form. The ionization current produced is measured.
- *Geiger-Muller (GM) Counters-or Gas Flow Proportional Counters.* The beta particles cause ionization in the counting gas and the resulting electrical pulses are counted. Proportional gas flow coun-

[Part 61, Appendix B, Method 114]

Copyright © 1993 by The Bureau of National Affairs, Inc
0013-9211/93/$0+$1.00

ters which are heavily shielded by lead or other metal, and provided with an anti-coincidence shield to reject cosmic rays, are called low background beta counters.

• *Scintillation Counters.* The beta particles transfer energy to a scintillator resulting in a production of light photons, which strike a photomultiplier tube converting the light photon to electrical pulses which are counted. This may involve the use of anthracene crystals, plastic scintillator, or liquid scintillation solutions with organic phosphors.

• *Liquid Scintillation Spectrometers.* Liquid scintillation counters which use two photomultiplier tubes in coincidence to reduce background counts. This counter may also electronically discriminate among pulses of a given range of energy.

3.5.3 Gamma Counting:

• *Low-Resolution Gamma Spectrometers.* The gamma rays interact with thallium activated sodium iodide or cesium iodide crystal resulting in the release of light photons which strike a photomultiplier tube converting the light pulses to electrical pulses proportional to the energy of the gamma ray. Multi-channel analyzers are used to separate and store the pulses according to the energy absorbed in the crystal.

• *High-Resolution gamma Spectrometers.* Gamma rays interact with a lithium-drifted (Ge(Li)) or high-purity germanium (HPGe) semiconductor detectors resulting in a production of electron-hole pairs. The charged pair is collected by an applied electrical field. A very stable low noise preamplifier amplifies the pulses of electrical charge resulting from the gamma photon interactions. Multichannel analyzers or computers are used to separate and store the pulses according to the energy absorbed in the crystal.

• *Single Channel Analyzers.* Thallium activated sodium iodide crystals used with a single window analyzer. Pulses from the photomultiplier tubes are separated in a single predetermined energy range.

3.5.4 Calibration of Counters. Counters are calibrated for specific radionuclide measurements using a standard of the radionuclide under either identical or very similar conditions as the sample to be counted. For gamma spectrometers a series of standards covering the energy range of interest may be used to construct a calibration curve relating gamma energy to counting efficiency.

In those cases where a standard is not available for a radionuclide, counters may be calibrated using a standard with energy characteristics as similar as possible to the radionuclide to be measured. For gross alpha and beta measurements of the unidentified mixtures of radionuclides, alpha counters are calibrated with a natural uranium standard and beta counters with a cesium-137 standard. The standard must contain the same weight and distribution of solids as the samples, and be mounted in an identical manner. If the samples contain variable amounts of solids, calibration curves relating weight of solids present to counting efficiency are prepared. Standards other than those prescribed may be used provided it can be shown that such standards are more applicable to the radionuclide mixture measured.

3.6 Radiochemical Methods for Selected Radionuclides. Methods for a selected list of radionuclides are listed in Table 1. The radionuclides listed are those which are most commonly used and which have the greatest potential for causing doses to members of the public. For radionuclides not listed in Table 1, methods based on any of the applicable "principles of measurement" described in section 3.1 through 3.4 may be used.

3.7 Applicability of Gross Alpha and Beta Measurements to Unidentified Mixtures of Radionuclides. Gross alpha and beta measurements may be used as a screening measurement as a part of an emission measurement program to identify the need to do specific radionuclide analyses or to confirm or verify that unexpected radionuclides are not being released in significant quantities.

Gross alpha (Method A-4) or gross beta (Methods B-2 or B-4) measurements may also be used for the purpose of comparing the measured concentrations in the effluent stream with the limiting "Concentration Levels for Environmental Compliance" in Table 2 of Appendix E. For unidentified mixtures, the measured concentration value shall be compared with the lowest environmental concentration limit for any radionuclide which is not known to be absent from the effluent stream.

TABLE 1—LIST OF APPROVED METHODS FOR SPECIFIC RADIONUCLIDES

Radionuclide	Approved methods of analysis
Am-241	A-1, A-2, A-3, A-4
Ar-41	B-1, B-2, G-1, G-2, G-3, G-4
Ba-140	G-1, G-2, G-3, G-4
Br-82	G-1, G-2, G-3, G-4
C-11	B-1, B-2, G-1, G-2, G-3, G-4
C-14	B-5
Ca-45	B-3, B-4, B-5
Ce-144	G-1, G-2, G-3, G-4
Cm-244	A-1, A-2, A-3, A-4
Co-60	G-1, G-2, G-3, G-4
Cr-51	G-1, G-2, G-3, G-4
Cs-134	G-1, G-2, G-3, G-4
Cs-137	G-1, G-2, G-3, G-4
Fe-55	B-5, G-1
Fe-59	G-1, G-2, G-3, G-4
Ga-67	G-1, G-2, G-3, G-4
H-3 (H_2O)	B-5
H-3 (gas)	B-1
I-123	G-1, G-2, G-3, G-4
I-125	G-1
I-131	G-1, G-2, G-3, G-4
In-113m	G-1, G-2, G-3, G-4
Ir-192	G-1, G-2, G-3, G-4
Kr-85	B-1, B-2, B-5, G-1, G-2, G-3, G-4
Kr-87	B-1, B-2, G-1, G-2, G-3, G-4
Kr-88	B-1, B-2, G-1, G-2, G-3, G-4
Mn-54	G-1, G-2, G-3, G-4
Mo-99	G-1, G-2, G-3, G-4
N-13	B-1, B-2, G-1, G-2, G-3, G-4
O-15	B-1, B-2, G-1, G-2, G-3, G-4
P-32	B-3, B-4, B-5
Pm-147	B-3, B-4, B-5
Po-210	A-1, A-2, A-3, A-4
Pu-238	A-1, A-2, A-3, A-4
Pu-239	A-1, A-2, A-3, A-4
Pu-240	A-1, A-2, A-3, A-4
Ra-226	A-1, A-2, G-1, G-2
S-35	B-5
Se-75	G-1, G-2, G-3, G-4
Sr-90	B-3, B-4, B-5
Tc-99	B-3, B-4, B-5
Te-201	G-1, G-2, G-3, G-4
Uranium (total alpha)	A-1, A-2, A-3, A-4
Uranium (isotopic)	A-1, A-3
Uranium (Natural)	A-5
Xe-133	G-1
Yb-169	G-1, G-2, G-3, G-4
Zn-65	G-1, G-2, G-3, G-4

4. *Quality Assurance Methods*

Each facility required to measure their radionuclide emissions shall conduct a quality assurance program in conjunction with the radionuclide emission measurements. This program shall assure that the emission measurements are representative, and are of known precision and accuracy and shall include administrative controls to assure prompt response when emission measurements indicate unexpectedly large emissions. The program shall consist of a system of policies, organizational responsibilities, written procedures, data quality specifications, audits, corrective actions and reports. This quali-

[Part 61, Appendix B, Method 114]

ty assurance program shall include the following program elements:

4.1 The organizational structure, functional responsibilities, levels of authority and lines of communications for all activities related to the emissions measurement program shall be identified and documented.

4.2 Administrative controls shall be prescribed to ensure prompt response in the event that emission levels increase due to unplanned operations.

4.3 The sample collection and analysis procedures used in measuring the emissions shall be described including where applicable:

4.3.1 Identification of sampling sites and number of sampling points, including the rationale for site selections.

4.3.2 A description of sampling probes and representativeness of the samples.

4.3.3 A description of any continuous monitoring system used to measure emissions, including the sensitivity of the system, calibration procedures and frequency of calibration.

4.3.4 A description of the sample collection systems for each radionuclide measured, including frequency of collection, calibration procedures and frequency of calibration.

4.3.5 A description of the laboratory analysis procedures used for each radionuclide measured, including frequency of analysis, calibration procedures and frequency of calibration.

4.3.6 A description of the sample flow rate measurement systems or procedures, including calibration procedures and frequency of calibration.

4.3.7 A description of the effluent flow rate measurement procedures, including frequency of measurements, calibration procedures and frequency of calibration.

4.4 The objectives of the quality assurance program shall be documented and shall state the required precision, accuracy and completeness of the emission measurement data including a description of the procedures used to assess these parameters. Accuracy is the degree of agreement of a measurement with a true or known value. Precision is a measure of the agreement among individual measurements of the same parameters under similar conditions. Completeness is a measure of the amount of valid data obtained compared to the amount expected under normal conditions.

4.5 A quality control program shall be established to evaluate and track the quality of the emissions measurement data against preset criteria. The program should include where applicable a system of replicates, spiked samples, split samples, blanks and control charts. The number and frequency of such quality control checks shall be identified.

4.6 A sample tracking system shall be established to provide for positive identification of samples and data through all phases of the sample collection, analysis and reporting system. Sample handling and preservation procedures shall be established to maintain the integrity of samples during collection, storage and analysis.

4.7 Periodic internal and external audits shall be performed to monitor compliance with the quality assurance program. These audits shall be performed in accordance with written procedures and conducted by personnel who do not have responsibility for performing any of the operations being audited.

4.8 A corrective action program shall be established including criteria for when corrective action is needed, what corrective actions will be taken and who is responsible for taking the corrective action.

4.9 Periodic reports to responsible management shall be prepared on the performance of the emissions measurements program. These reports should include assessment of the quality of the data, results of audits and description of corrective actions.

4.10 The quality assurance program should be documented in a quality assurance project plan which should address each of the above requirements.

5. *References*

(1) American National Standards Institute, "Guide to Sampling Airborne Radioactive Materials in Nuclear Facilities", ANSI-N13.1-1969, American National Standards Institute, New York, New York (1969).

(2) American Public Health Association, "Methods of Air Sampling", 2nd Edition, Method 605, "Tentative Method of Analysis for Plutonium Content of Atmospheric Particulate Matter". American Public Health Association, New York, NY (1977).

(3) Ibid, Method 601, "Tentative Method of Analysis for Gross Alpha Radioactivity Content of the Atmosphere".

(4) Ibid, Method 602, "Tentative Method of the Analysis for Gross Beta Radioactivity Content of the Atmosphere".

(5) Ibid, Method 608, "Tentative Method of Analysis for Strontium-90 Content of Atmospheric Particulate Matter".

(6) Ibid, Method 609, "Tentative Method of Analysis for Tritium Content of the Atmosphere".

(7) Ibid, Method 603, "Tentative Method of Analysis for Iodine-131 Content of the Atmosphere".

(8) American Society for Testing and Materials, 1986 Annual Book ASTM Standards, Designation D-3648-78, "Standard Practices for the Measurement of Radioactivity". American Society for Testing and Materials, Philadelphia, PA (1986).

(9) Ibid, Designation D-3649-85, "Standard Practice for High Resolution Gamma Spectrometry".

(10) Ibid, Designation D-1943-81, "Standard Test Method for Alpha Particle Radioactivity of Water".

(11) Ibid, Designation D-1890-81, "Standard Test Method for Beta Particle Radioactivity of Water".

(12) Ibid, Designation D-2459-72, "Standard Test Method for Gamma Spectrometry of Water".

(13) Ibid, Designation D-3972-82, "Standard Test Method for Isotopic Uranium in Water by Radiochemistry".

(14) Ibid, Designation D-2907-83, "Standard Test Methods for Microquantities of Uranium in Water by Fluorometry".

(15) Ibid, Designation E-318, "Standard Test Method for Uranium in Aqueous Solutions by Colorimetry".

(16) Ibid, Designation D-3084-75, "Standard Practice for Alpha Spectrometry of Water".

(17) Corley, J.P. and C.D. Corbit, "A Guide for Effluent Radiological Measurements at DOE Installations", DOE/EP-0096, Pacific Northwest Laboratories, Richland, Washington (1983).

(18) Department of Energy, "RESL Analytical Chemistry Branch Procedures Manual", IDO-12096, U.S. Department of Energy, Idaho Falls, Idaho (1982).

(19) Environmental Protection Agency, "Radiochemical Analytical Procedures for Analysis of Environmental Samples", EMSL-LV-0539-17, U.S. Environmental

[Part 61, Appendix B, Method 114]

Copyright © 1993 by The Bureau of National Affairs, Inc.
0013-9211/93/$0+$1.00

Protection Agency, Environmental Monitoring and Support Laboratory, Las Vegas, Nevada (1979).

(20) Environmental Protection Agency, "Radiochemistry Procedures Manual", EPA 520/5-84-006, Eastern Environmental Radiation Facility, Montgomery, Alabama (1984).

(21) National Council on Radiation Protection and Measurements, NCRP Report No. 50, "Environmental Radiation Measurements", National Council on Radiation Protection and Measurement, Bethesda, Maryland (1976).

(22) Ibid, Report No. 47, "Tritium Measurement Techniques". (1976).

(23) Ibid, Report No. 58 "A Handbook of Radioactivity Measurement Procedures" (1985).

(24) Environmental Protection Agency, "Indoor Radon and Radon Decay Product Measurement Protocols", EPA 520/1-89-009, U.S. Environmental Protection Agency, Washington, DC (1989).

METHOD 115—MONITORING FOR RADON-222 EMISSIONS

This Appendix describes the monitoring methods which must be used in determining the radon-222 emissions from underground uranium mines, uranium mill tailings piles, phosphogypsum stacks, and other piles of waste material emitting radon.

1. *Radon-222 Emissions from Underground Uranium Mine Vents*

1.1 Sampling Frequency and Calculation of Emissions. Radon-222 emissions from underground uranium mine vents shall be determined using one of the following methods:

1.1.1 Continuous Measurement. These measurements shall be made and the emissions calculated as follows:

(a) The radon-222 concentration shall be continuously measured at each mine vent whenever the mine ventilation system is operational.

(b) Each mine vent exhaust flow rate shall be measured at least 4 times per year.

(c) A weekly radon-222 emission rate for the mine shall be calculated and recorded weekly as follows:

$$A_w = C_1Q_1T_1 + C_2Q_2T_2 + \ldots C_iQ_iT_i$$

Where:

A_w=Total radon-222 emitted from the mine during week (Ci)

C_i=Average radon-222 concentration in mine vent i(Ci/m^3)

Q_i=Volumetric flow rate from mine vent i(m^3/hr)

T_i=Hours of mine ventilation system operation during week for mine vent i(hr)

(d) The annual radon-222 emission rate is the sum of the weekly emission rates during a calendar year.

1.1.2 Periodic Measurement. This method is applicable only to mines that continuously operate their ventilation system except for extended shutdowns. Mines which start up and shut down their ventilation system frequently must use the continuous measurement method describe in Section 1.1.1 above. Emission rates determined using periodic measurements shall be measured and calculated as follows:

(a) The radon-222 shall be continuously measured at each mine vent for at least one week every three months.

(b) Each mine vent exhaust flow rate shall be measured at least once during each of the radon-222 measurement periods.

(c) A weekly radon-222 emission rate shall be calculated for each weekly period according to the method described in Section 1.1.1. In this calculation T=168 hr.

(d) The annual radon-222 emission rate from the mine should be calculated as follows:

$$A_y = \frac{52 - W_s}{n} (A_{w1} + A_{w2} + \ldots A_{wi})$$

Where:

A_y=Annual radon-222 emission rate from the mine(Ci)

A_{wi}=Weekly radon-222 emission rate during the measurement period i (Ci)

n=Number of weekly measurement periods per year

W_s=Number of weeks during the year that the mine ventilation system is shut down in excess of 7 consecutive days, i.e. the sum of the number of weeks each shut down exceeds 7 days

1.2 Test Methods and Procedures

Each underground mine required to test its emissions, unless an equivalent or alternative method has been approved by the Administrator, shall use the following test methods:

1.2.1 Test Method 1 of Appendix A to part 60 shall be used to determine velocity traverses. The sampling point in the duct shall be either the centroid of the cross section or the point of average velocity.

1.2.2 Test Method 2 of Appendix A to part 60 shall be used to determine velocity and volumetric flow rates.

1.2.3 Test Methods A-6 or A-7 of Appendix B, Method 114 to part 61 shall be used for the analysis of radon-222. Use of Method A-7 requires prior approval of EPA based on conditions described in Appendix B.

1.2.4 A quality assurance program shall be conducted in conformance with the programs described for Continuous Radon Monitors and Alpha Track Detectors in EPA 520/1-89-009. (2)

2. *Radon-222 Emissions from Uranium Mill Tailings Piles*

2.1 Measurement and Calculation of Radon Flux from Uranium Mill Tailings Piles.

2.1.1 Frequency of Flux Measurement. A single set of radon flux measurements may be made, or if the owner or operator chooses, more frequent measurements may be made over a one year period. These measurements may involve quarterly, monthly or weekly intervals. All radon measurements shall be made as described in paragraphs 2.1.2 through 2.1.6 except that for measurements made over a one year period, the requirement of paragraph 2.1.4(c) shall not apply. The mean radon flux from the pile shall be the arithmetic mean of the mean radon flux for each measurement period. The weather conditions, moisture content of the tailings and area of the pile covered by water existing at the time of the measurement shall be chosen so as to provide measurements representative of the long term radon flux from the pile and shall be subject to EPA review and approval.

2.1.2 Distribution of Flux Measurements. The distribution and number of radon flux measurements required on a pile will depend on clearly defined areas of the pile (called regions) that can have significantly different radon fluxes due to surface conditions. The mean radon flux shall be determined for each individual region of the pile. Regions that shall be considered for operating mill tailings piles are:

(a) Water covered areas,

(b) Water saturated areas (beaches),

[Part 61, Appendix B, Method 115]

DETERMINATION OF SULFUR DIOXIDE EMISSIONS BY EPA METHOD 6

Sampling procedures used during this test program follow those described in EPA Method 6.*

Sampling Apparatus

The SO_2 train used in these tests meets design specifications established by the U.S. EPA. Assembled by ITAQS personnel, it consists of the following:

Probe - Borosilicate glass with a heating system capable of maintaining a gas temperature of approximately 250°F at the exit end. A plug of glass wool is placed in the end of the probe to remove particulate matter.

Impingers - Four impingers connected in series with glass ball joints. The first and third impingers are of the Greenburg-Smith design. The second and fourth impingers are modified by replacing the tip with a ½-in.-i.d. glass tube extending to within ½ in. from the bottom of the flask. Glass wool is placed in the first U-joint to prevent sulfuric acid mist carryover.

Metering System - Vacuum gauge, leak-free pump, thermometers capable of measuring temperature to within 5°F, dry gas meter with 2 percent accuracy, and related equipment to maintain a constant sampling rate and to determine total sample volume.

Barometer - Aneroid type to measure atmospheric pressures to ±0.1 in.Hg.

Sampling Reagents

Water - Deionized, distilled to conform to ASTM specifications D1193-74, Type 3.

Isopropanol, 80%

Hydrogen Peroxide, 3%

---

* 40 CFR 60, Appendix A, July 1992.

Analytical Reagents

Water - Deionized, distilled.

Isopropanol, 100%

Thorin Indicator - 0.2 percent 1-(o-arsonophenylazo), 2-naphthol, 3,6-disulfonic acid, disodium salt.

Barium Perchlorate Solution, 0.01 N

Sulfuric Acid Standard, 0.0100 N

Ammonium Sulfate Standard, 0.0100 N

Sampling Procedure

After the sampling site and the required traverse points are selected, the stack pressure, temperature, moisture, and range of velocity head are measured according to procedures described in U.S. EPA Methods 1 through 4.*

One sampling point is chosen and the train is assembled as follows: 100 mL of 80 percent isopropanol in the first impinger, 100 mL of 3 percent hydrogen peroxide in both the second and third impingers, and 200 g of silica gel in the fourth impinger. A portion of each reagent is retained for use as a blank. The train is assembled as shown in Figure M6-1. The sampling train is leak-checked at the sampling site before each test by plugging the inlet to the probe and pulling a 10-in.Hg vacuum. The post-test leak check is conducted in the same manner except at the highest vacuum reached during the sampling run. All leaks are corrected before sampling begins. The probe heater is set to maintain a minimum temperature of 250°F. Crushed ice is placed around the impingers and more ice is added during the test to keep the temperature of the gases leaving the last impinger at 68°F or less.

At the completion of each test, the train is removed from the stack and the impingers are removed from the ice bath. The train is then purged with ambient air for 15 minutes at a rate of 0.75 cfm.

* 40 CFR 60, Appendix A, July 1992.

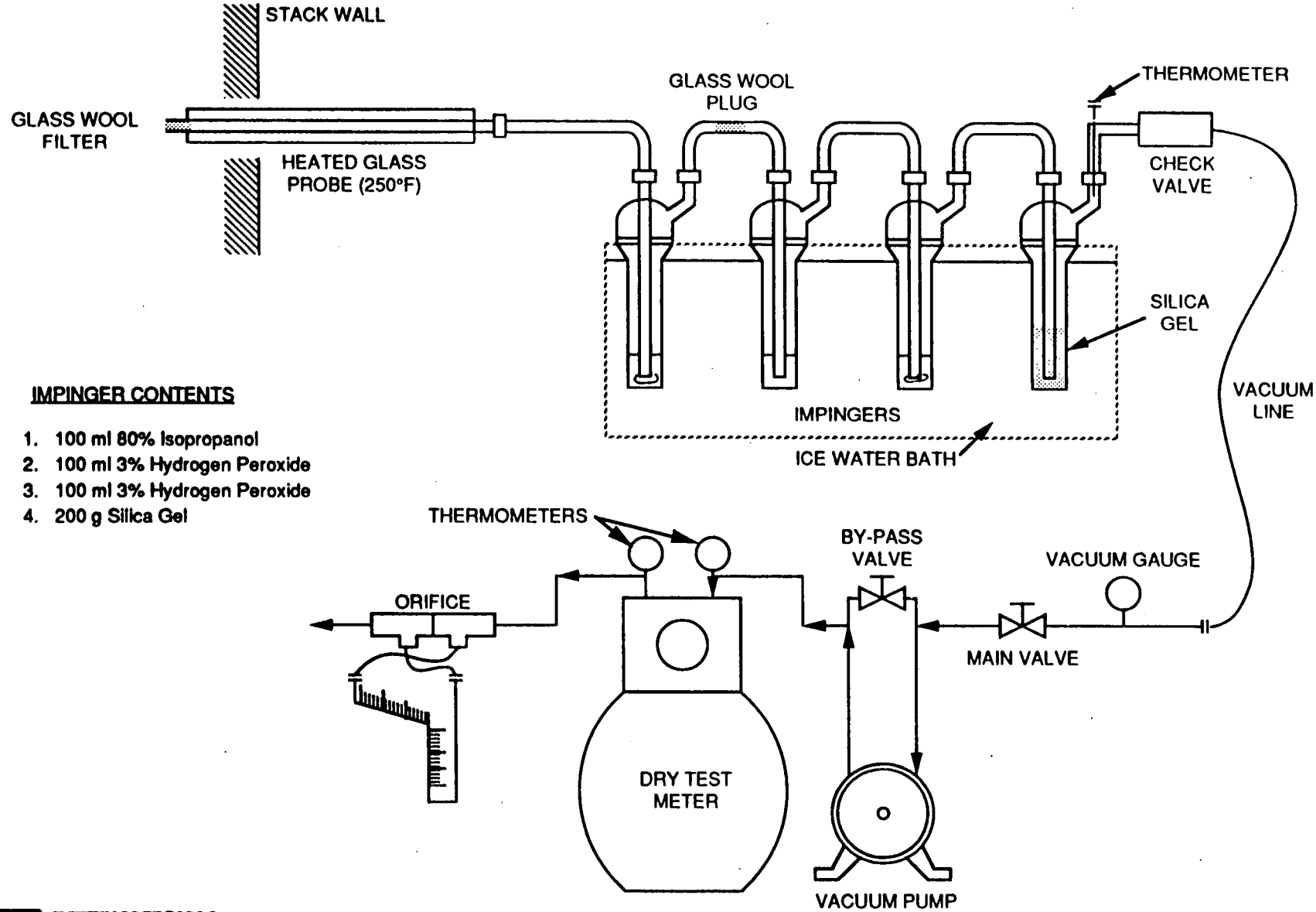

INTERNATIONAL TECHNOLOGY CORPORATION

Figure M6-1. SO_2 sampling train.

DRAWING BY	JIS, III 10/8/92	CHECKED BY			DRAWING NO. 6-332251-10/92-2
		APPROVED BY			

Title: M6
Date: 10/15/92

6543

D-27

000222

Sample Recovery

The contents of the first impinger are measured and discarded. The contents of the second and third impingers are measured and placed in a leak-free polyethylene container. The second and third impingers and connecting glassware are then rinsed with distilled, deionized water and this rinse is added to the same polyethylene container. The container is sealed and identified, and the liquid level is marked.

Analytical Procedures

The volume of each sample is recorded and diluted to 1000 mL with deionized, distilled water. An appropriate aliquot of this solution is pipetted into a 250-mL Erlenmeyer flask. Deionized, distilled water is added to bring the volume to 20 mL. Eighty mL of 100 percent isopropanol and two to four drops of thorin indicator are added. The solution is titrated to a pink end point using 0.01 N barium perchlorate. A blank is titrated in the same manner as the samples.

Quality Control

Titrant is standardized daily using standard sulfuric acid solution. As an internal audit, a sample of ammonium sulfate standard solution is analyzed prior to each set of samples. The result must be within ±5 percent of the expected value before analysis is continued. U.S. EPA audit samples for SO_2 are analyzed with each batch of samples when provided by EPA personnel. Audit results are also required to agree with the reference concentration within ±5 percent.

All analyses are conducted in duplicate, and duplicate titrations must agree within 1 percent or 0.2 mL, whichever is greater.

DETERMINATION OF NITROGEN OXIDE EMISSIONS

This test program follows the sampling procedures described in EPA Method 7A.*

Sampling Apparatus

The nitrogen oxide (NO_x) sampling train used in these tests meets design specifications established by the Federal EPA. Assembled by ITAQS personnel, it consists of the following:

Probe - Borosilicate glass tubing with a heating system capable of maintaining a gas temperature of approximately 250°F at the exit end to prevent water condensation. A glass-wool plug is placed in the end of the probe to remove particulate matter, as shown in Figure 7A-1.

Collection Flask - Two-liter borosilicate, round-bottom flask, with short neck and 24/40 standard taper opening, protected against implosion or breakage.

Flask Valve - Two-way stopcock connected to a 24/10 standard taper joint.

Manifold - Two- and three-way Teflon stopcock and connected 24/10 standard taper joints.

Temperature Gauge - Dial-type thermometer capable of measuring 2°F intervals from 25° to 125°F.

Vacuum Line - Tubing capable of withstanding a vacuum of 3 in.Hg absolute pressure, with "T" connection and T-bore stopcock.

Vacuum Gauge - U-tube manometer, 36 in.Hg with 0.1-in. divisions.

Pump - Capable of evacuating the collection flask to a pressure equal to or less than 3 in.Hg absolute.

Barometer - Aneroid type to measure atmospheric pressures to ±0.1 in.Hg.

---

* 40 CFR 60, Appendix A, July 1990.

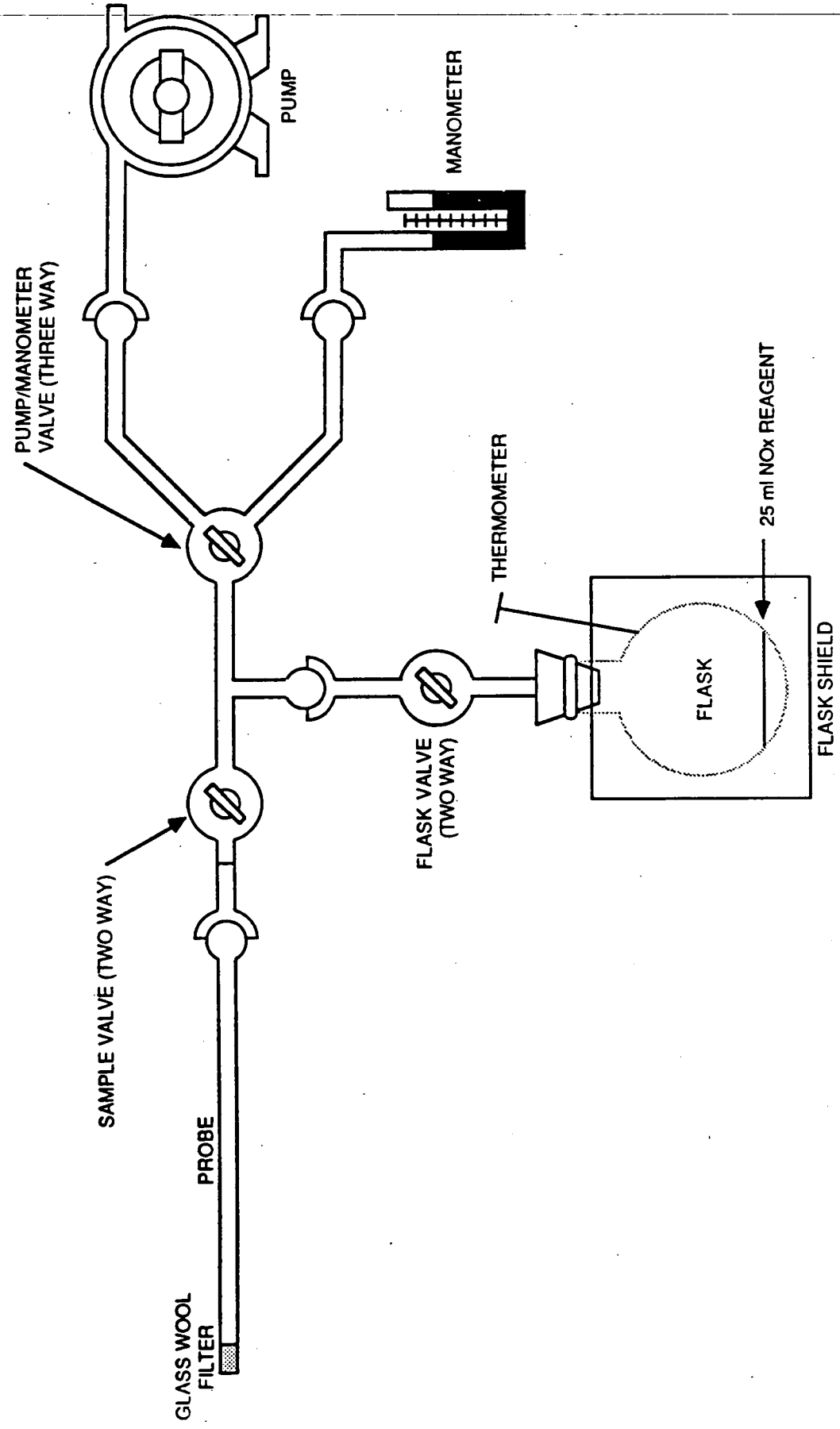

Figure 7A-1. Method 7 sampling train.

Sampling Procedure

Following the selection of the sampling site and minimum number of traverse points, the stack pressure, temperature, moisture, and range of velocity head are measured according to procedures described in EPA Methods 1 through 4.*

One sampling point, representing the average flow rate, is chosen. The sampling flask is charged with 25 mL of absorbing solution (made by mixing 1 liter of distilled water, 2.8 mL of concentrated H_2SO_4, and 6 mL of 3 percent H_2O_2). A portion of the reagent is retained for use in preparing the calibration standards.

With the sample valve closed, the flask valve open, and the pump/manometer valve open to pump, the flask is evacuated to less than 3 in.Hg absolute pressure. Flask vacuum is determined by moving the pump/manometer valve to manometer. Leakage is checked by observing the manometer for pressure fluctuation. Any variation greater than 0.4 in.Hg over a 1-minute period is corrected before sampling.

With the flask closed, the sample valve open, and the pump/manometer valve turned to pump, the sampling apparatus is purged for 5 minutes. The probe heater setting is adjusted to prevent any visible condensation. With the sample valve closed and the pump/manometer valve open to manometer, an initial flask vacuum is determined by opening the flask valve. The sample valve is then slowly opened, allowing stack gas to enter the flask. The vacuum is allowed to drop to 3 in.Hg (approximately 15 seconds), and then the sample flask valves are closed. The flask is shaken for 5 minutes to ensure contact between the sample and absorbing solution.

Sample Recovery Procedure

The collection flasks are transported to the laboratory for sample recovery. The flasks are set aside for a minimum of 16 hours. At the end of the period, the flasks are shaken for 2 minutes and the final flask pressure and temperatures are measured. All pertinent data are recorded on the recovery data sheets.

---

* 40 CFR 60, Appendix A, July 1990.

The contents of the flask are measured volumetrically and transferred to a polyethylene container. The flask is then rinsed with two separate 5-mL portions of deionized, distilled water, and the solution is added to the same container.

Analytical Procedure

The volume of absorbing solution is recorded and diluted to 50 mL with deionized, distilled water. A 5-mL aliquot of this solution is pipetted to a volumetric flask and diluted to 50 mL with deionized water. The samples from the second dilution are analyzed by ion chromatography. A calibration curve of μg NO_x versus peak area response is prepared using standards of known concentration.

DETERMINATION OF HCl EMISSIONS

This sampling procedure is based on a draft protocol, proposed Method 26, published by the U.S. EPA.* The sampling train consists of a heated glass probe, a Teflon filter, and a series of Greenburg-Smith impingers. The first two impingers contain acidified water (0.1 N H_2SO_4) to collect HCl and separate the chlorine (Cl_2) fraction. The next impinger contains 0.1 N NaOH to trap Cl_2. The acidified water is analyzed by ion chromatography (IC) in accordance with EPA Method 300.0.**

Sample Apparatus

The sampling train is shown in Figure 26-1. It consists of:

Probe - Borosilicate glass with a heating system capable of maintaining a gas temperature of 248° ±25°F at the exit end during sampling.

Filter Holder - Pyrex glass with a heating system capable of maintaining a filter temperature of 248° ±25°F.

Filter - 87-mm (3-in.) -diameter, Teflon mat filter, Pallflex® TX 40H175 or equivalent.

Draft Gauge - A dual inclined manometer made by Dwyer with a readability of 0.01 in.H_2O in the 0- to 1-in. range and 0.1 in.H_2O in the 1- to 10-in. range.

Impingers - Four impingers connected in series with glass ball joints. The second impinger is of the Greenburg-Smith design; the others are modified by replacing the tip with a ½-in.-i.d. glass tube extending to within ½ in. of the bottom of the flask.

---

* The Determination of HCl Emissions From Stationary Sources. August 1989.

** The Determination of Inorganic Anions in Water by Ion Chromatography, EPA-600/4-84-017, March 1984.

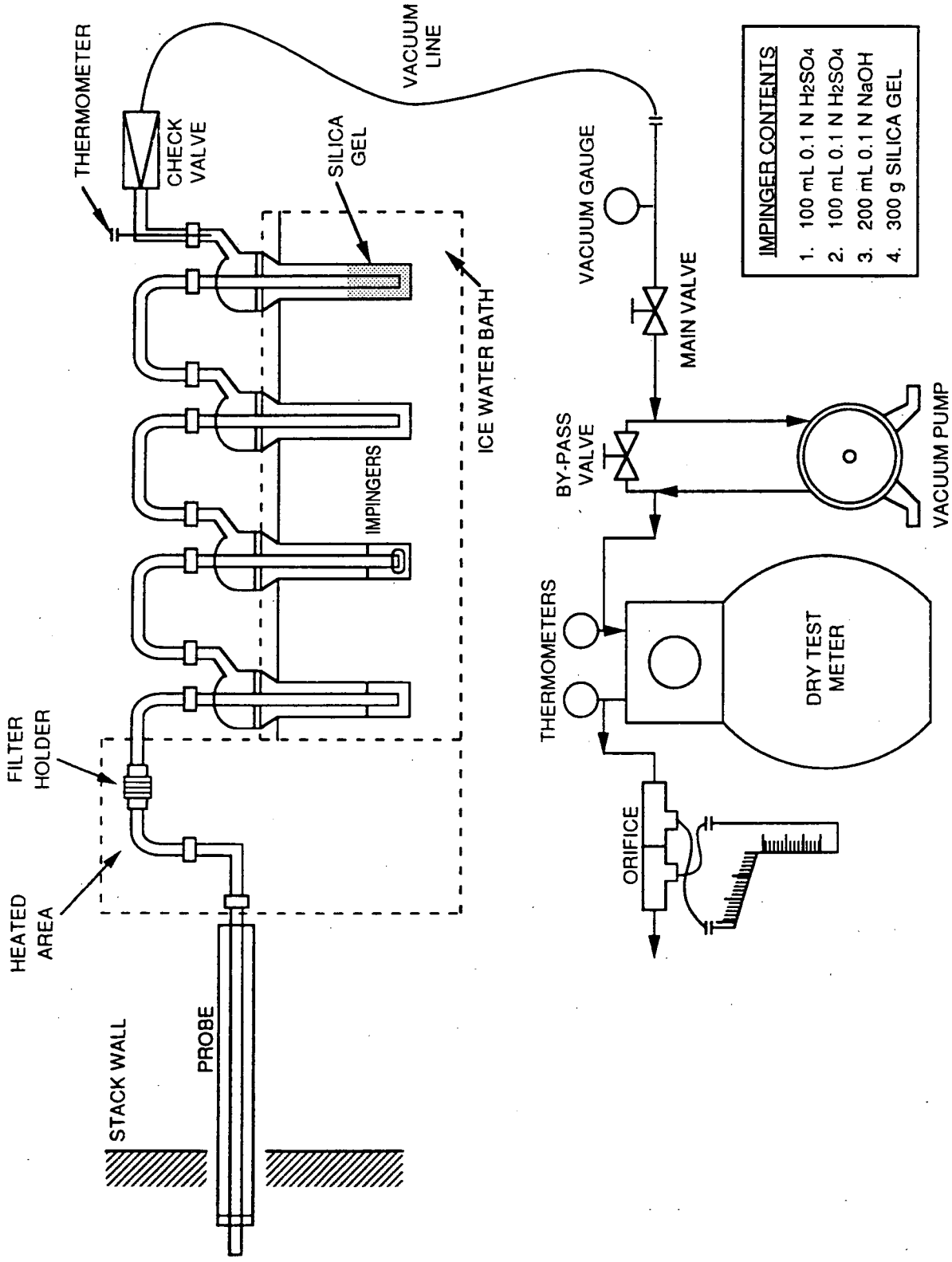

Figure 26-1. HCl sampling train.

Metering System - Vacuum gauge, leak-free pump, thermometers capable of measuring temperature to within 5°F, a dry gas meter with 2 percent accuracy, and related equipment. The dry gas meter is made by Rockwell and the fiber vane pump is made by Gast.

Barometer - Aneroid barometer capable of measuring atmospheric pressure within ±0.1 in.Hg.

Sampling Procedures

Prior to each test run, the stack pressure, velocity, temperature, and composition (O_2 and CO_2) are measured according to procedures described in EPA Methods 1 through 3.* Gas moisture content is determined during each test run by using procedures described in EPA Method 4.* Sampling is conducted at a single point near the center of the duct.

The train is assembled as shown in Figure 26-1. One hundred mL of 0.1 N H_2SO_4 is placed in each of the first two impingers; the third impinger contains 0.1 N NaOH; and the fourth contains 300 g of silica gel. The sampling train is leak-checked at the sampling site before and after each test. The initial leak check is conducted by plugging the inlet to the probe and pulling a 15-in.Hg vacuum. A pretest leakage rate in excess of 0.02 ft^3/min is corrected prior to sampling. The posttest leak check is conducted at the highest vacuum recorded during the run.

Crushed ice is placed around the impingers to keep the temperature of the gases leaving the last impinger at 68°F or less.

Sampling is conducted at a constant rate. All sampling data are recorded on the Field Data Sheet.

Sample Recovery Procedures

The volume of liquid from the first three impingers is measured, and sample fractions are recovered as follows:

---

*40 CFR 60, Appendix A, July 1990.

Container No. 1 - The contents of the first and second impingers are measured and placed along with a distilled water rinse of the glassware into a 1-liter polyethylene container. The container is labeled for HCl analysis. The contents of the third impinger are measured and discarded.

The silica gel from the fourth impinger is weighed, and this value is recorded on the Sample Recovery and Integrity Sheet along with other pertinent data.

Blank samples of the H_2SO_4 and DI water used in rinsing are also submitted for analysis.

Analysis Procedures

Analytical procedures followed during this program are those described in EPA Method 300.0.

Container No. 1 - An aliquot of the impinger solution is taken for HCl analysis by IC. A Waters IC with Model 431 conductivity detector or equivalent is used for the HCl analysis. Calibrating standards are prepared from reagent grade or better chemicals and diluted in IC eluent. A minimum three-point plus blank calibration curve is generated and a reference solution is analyzed to verify the calibration prior to analysis of any samples. Each sample is analyzed by direct injection. If a sample value is determined to be higher than the highest calibration value, the sample is diluted with IC eluent and reanalyzed. Quantitation is based on a linear regression of the calibration data. The H_2SO_4 and DI water blanks are analyzed using the same procedure.

SAMPLING AND ANALYTICAL PROCEDURES

DETERMINATION OF TOTAL FLUORIDE EMISSIONS BY EPA METHOD 13b

The sampling procedures followed during this test program are those described in EPA Method 13b.*

Sampling Apparatus

The sampling train used at the exit stack during these tests meets design specifications established by the Federal EPA. Assembled by ITAQS personnel, it consists of the following:

Nozzle - Stainless steel (316) with sharp, tapered, leading edge and accurately measured round opening.

Probe - Borosilicate glass with a heating system capable of maintaining a gas temperature of 248 ±25°F at the exit end during sampling.

Pitot Tube - A Type-S pitot tube that meets all geometric standards; attached to the probe to monitor stack gas velocity.

Filter Holder - Pyrex glass. If the filter is placed between the probe and the first impinger, the filter support must be a 20-mesh stainless steel or Teflon screen. A glass frit cannot be used.

Filter - Whatman No. 541 paper filter, 3-in. diameter.

Draft Gauge - A dual-inclined manometer made by Dwyer with a readability of 0.01 in.H_2O in the 0- to 1-in. range and 0.1 in.H_2O in the 1- to 10-in. range.

Impingers - Four impingers connected in series with glass ball joints. The first, third, and fourth impingers are of the Greenburg-Smith design, modified by replacing the tip with a ½-in.-i.d. glass tube extending to ½-in. from the bottom of the flask. The second is a standard Greenberg-Smith type.

Metering System - Vacuum gauge, leak-free pump, thermometers capable of measuring temperature to within 5°F, dry gas meter with 2 percent accuracy, and related equipment to maintain an isokinetic sampling rate and to determine

* 40 CFR 60, Appendix A, July 1991.

sample volume. The dry gas meter is made by Rockwell and the fiber vane pump is made by Gast.

Barometer - Aneroid type to measure atmospheric pressure to ±0.1 in.Hg.

Sampling Procedure

After the sampling site and the minimum number of traverse points are selected, the stack pressure, temperature, composition (percent CO_2 and percent O_2 by volume), moisture, and range of velocity head are measured according to procedures described in EPA Methods 1 through 4.*

Approximately 200 grams of silica gel is weighed and placed in a sealed impinger prior to each test. One hundred milliliters (mL) of distilled water is placed in each of the first two impingers; the third impinger is initially empty; and the fourth impinger contains silica gel. The train is set up with the probe as shown in Figure M13-1. As an option, the filter may be placed between the probe and the first impinger and heated to 248° ±25°F. The sampling train is leak-checked at the sampling site prior to each test run by plugging the inlet to the nozzle and pulling a 15-in.Hg vacuum; and at the conclusion of the test, by plugging the inlet to the nozzle and pulling a vacuum equal to the highest vacuum reached during the test run. The leak check is acceptable if the leakage rate is less than 0.02 ft^3/min or 4 percent of the average sampling rate, whichever is lower.

The pitot tube and lines are leak-checked at the test site prior to and at the conclusion of each test run. The check is made by blowing into the impact opening of the pitot tube until 3 or more inches of water is recorded on the manometer and then capping the impact opening and holding it for 15 seconds to assure it is leak-free. The static pressure side of the pitot tube is leak-checked by the same procedure, except suction is used to obtain the 3-in.H_2O manometer reading. Crushed ice is placed around the impingers to keep the temperature of the gases leaving the last impinger at 68°F or less.

---

* 40 CFR 60, Appendix A, July 1991.

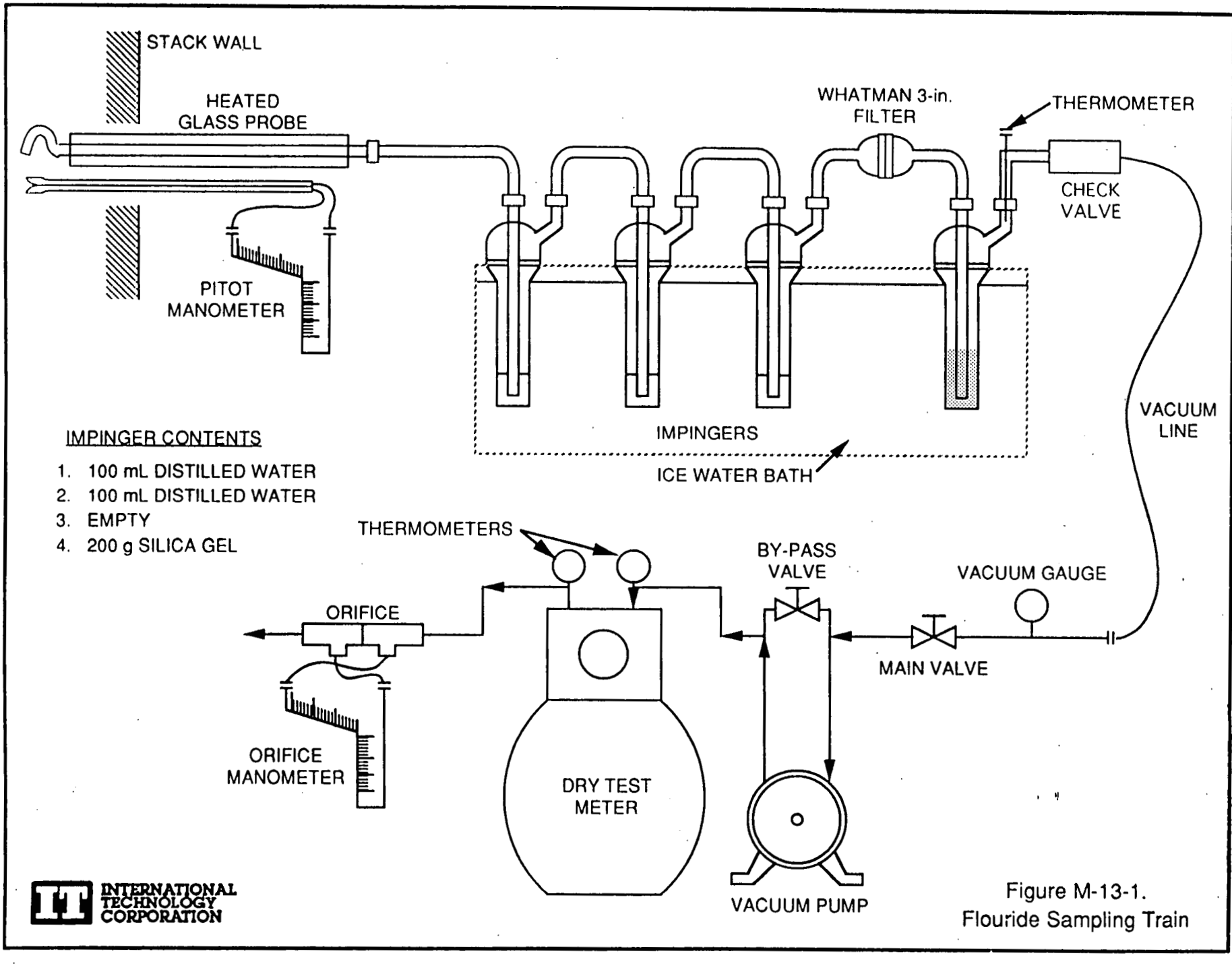

Figure M-13-1.
Flouride Sampling Train

6543

000234

During sampling, stack gas and sampling train data are recorded at each sampling point and whenever significant changes occur in stack flow conditions. Isokinetic sampling rates are set throughout the sampling period with the aid of a calculator. All sampling data are recorded on the Particulate Field Data Sheet.

Sample Recovery Procedure

The sampling train is moved carefully from the test site to the cleanup area. The volume of water from the first three impingers is measured, and sample fractions are recovered as follows:

> Container No. 1 - Distilled H_2O in the impinger section of the sampling train is placed in a polyethylene container. The impingers, connecting glassware, probe, and nozzle are rinsed with distilled H_2O, and this rinse is added to the container for shipment to the laboratory. A nylon brush is used to remove particulate from the probe and nozzle fractions and the stem of the first impinger if needed. The filter is also added to this container.

The silica gel from the fourth impinger is weighed, and this value is recorded on the Sample Recovery and Integrity Sheet along with other pertinent data. An unused filter and a minimum of 200 mL each of distilled water are taken as blanks.

Analytical Procedures

The analytical procedures followed during this program are those described in EPA Method 13b.* Analysis is conducted by specific ion electrode.

The sample is initially filtered. The filtered solids are then combusted in the presence of CaO to prevent loss of fluorine. The ash is then fused with crushed NaOH and quantitatively mixed with the filtrate. The filtrate solution is acidified and distilled. The distillate is diluted, buffered, and analyzed by specific ion electrode. The ion electrode is calibrated with five standards between 0.1 and 10.0 mg/liter. If no fluoride is detected, the reported detection limit is 0.1 mg/liter.

---

* 40 CFR 60, Appendix A, July 1991.

APPENDIX E

CALIBRATION PROCEDURES AND RESULTS

CALIBRATION PROCEDURES AND RESULTS

All of the equipment used is calibrated in accordance with the procedures outlined in the Quality Assurance Handbook for Air Pollution Measurement Systems, Volume III.* The following pages describe these procedures and include the data sheets.

*EPA 600/4-77-027b.

Title: E-2
Date: 3/23/92

Nozzle Diameter

Each nozzle used in these tests is calibrated by making three separate measurements and calculating the average. If a deviation of more than 0.004 inch is found between any two measurements, the nozzle is either discarded or reamed out and remeasured. A micrometer is used for measuring. These calibration data are shown in the following Nozzle Calibration data sheet(s).

INTERNATIONAL TECHNOLOGY CORPORATION

NOZZLE CALIBRATION

Client Fermco

Project No. 332331

Date 8-4-94

Calibrated By GT

Nozzle I.D.	D1 in.	D2 in.	D3 in.	&D in.	D avg.
5-110	.313	.314	.314	.001	.314
5-102	.312	.313	.313	.001	.313
5-105	.313	.313	.313	.000	.313

Where:

D 1, 2, 3 = nozzle diameter measured on a different diameter, in.
Tolerance = measure within 0.001 in.

&D = maximum difference in any two measurements, in.
Tolerance = 0.004 in.

D avg. = average of D1, D2, and D3

000239

INTERNATIONAL TECHNOLOGY CORPORATION

NOZZLE CALIBRATION

Client Fermco

Project No. 332331

Date 8/8/94

Calibrated By B Gonzls

Nozzle I.D.	D1 in.	D2 in.	D3 in.	&D in.	D avg.
G-101	0.374	0.372	0.373	0.002	0.373
G-102	0.369	0.372	0.369	0.003	0.370
G-103	0.372	0.374	0.374	0.002	0.373
G-104	0.374	0.374	0.373	0.001	0.374
G-411	0.260	.261	.260	.001	0.260
G-420	0.275	.275	.275	.000	.275

Where:

D 1, 2, 3 = nozzle diameter measured on a different diameter, in.
Tolerance = measure within 0.001 in.

&D = maximum difference in any two measurements, in.
Tolerance = 0.004 in.

D avg. = average of D1, D2, and D3

INTERNATIONAL TECHNOLOGY CORPORATION

NOZZLE CALIBRATION

Client Fermco

Project No. 33233/

Date 9/13/94

Calibrated By Ct

Nozzle I.D.	D1 in.	D2 in.	D3 in.	&D in.	D avg.
S-104	.312	.312	.312	.000	.312
S-107	.313	.312	.312	.001	.312

Where:

D 1, 2, 3 = nozzle diameter measured on a different diameter, in.
Tolerance = measure within 0.001 in.

&D = maximum difference in any two measurements, in.
Tolerance = 0.004 in.

D avg. = average of D1, D2, and D3

Pitot Tube Calibration

Each pitot tube used in sampling is constructed by ITAQS and meets all requirements of EPA Method 2, Section 4.1.* Therefore, a baseline coefficient of 0.84 is assigned to each pitot tube. The following pages show the alignment requirements of Method 2 and the Pitot Tube Inspection Data Sheet(s) for each pitot tube used during the test program.

*40 CFR 60, Appendix A, July 1989.

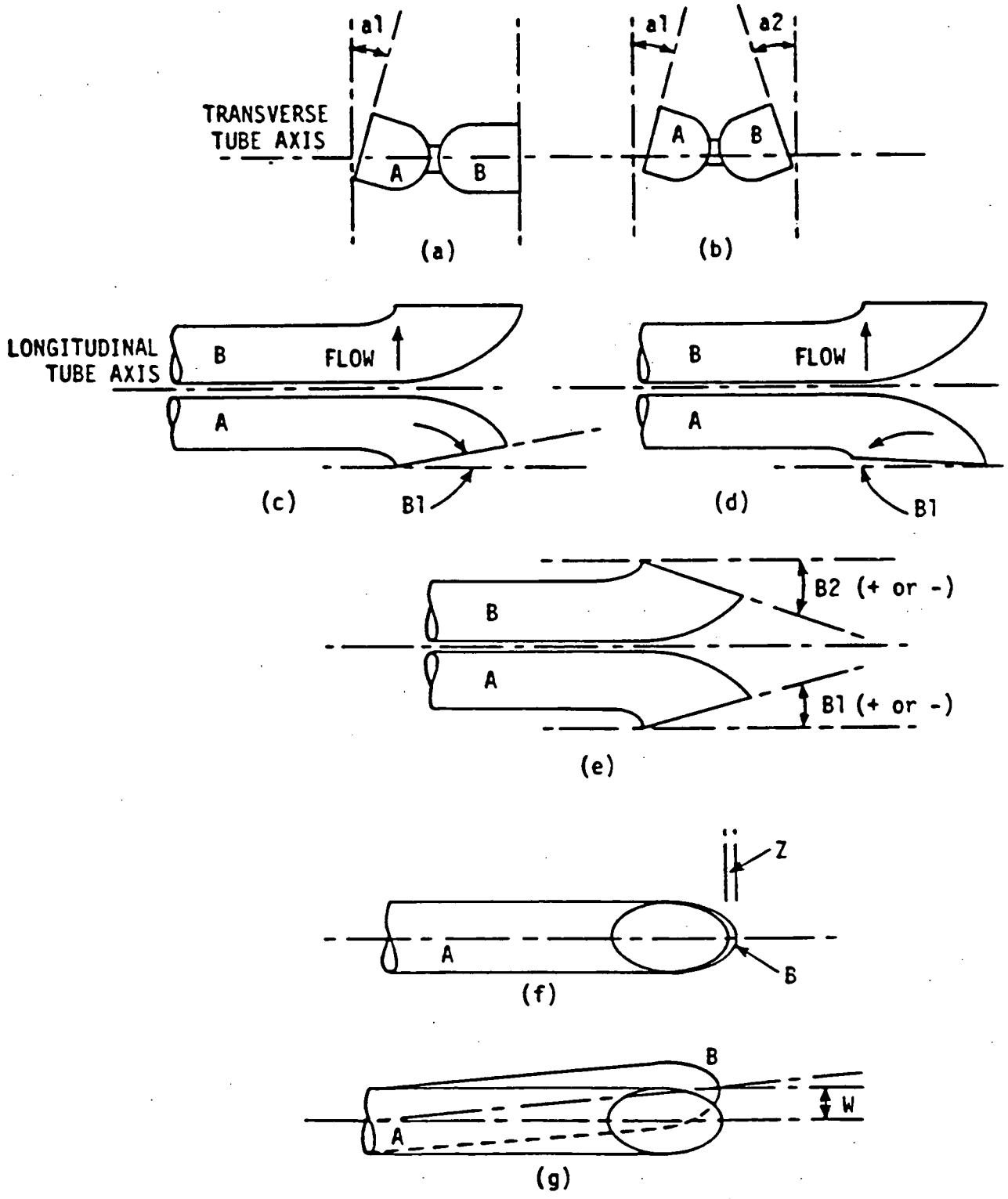

Types of face-opening misalignment that can result from field use or improper construction of Type S pitot tubes. These will not affect Cp as long as a_1 and a_2 are <10°, B_1 and B_2 are <5°, z is <0.32 (1/8 in.), and w is <0.08 cm (1/32 in.).

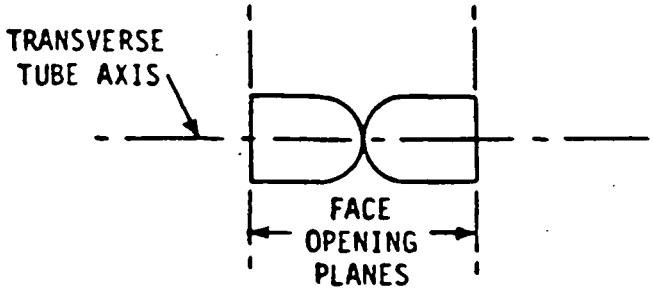

(a) ENDVIEW

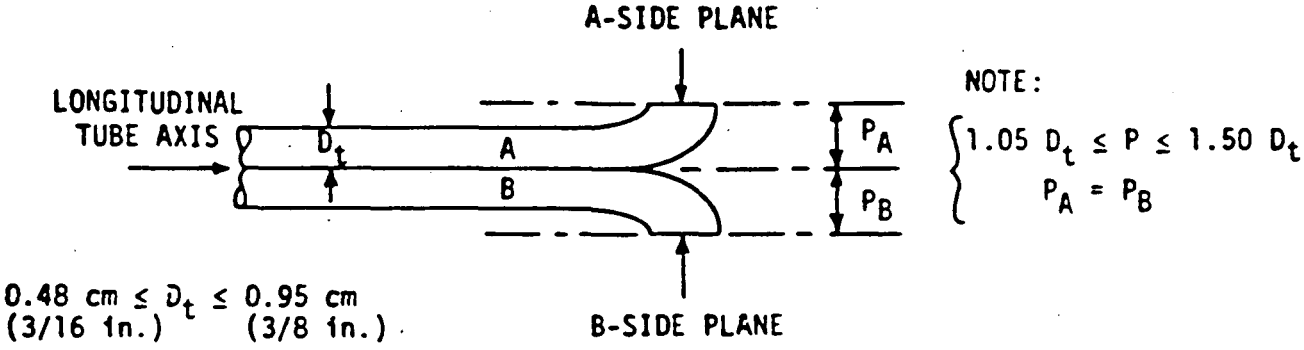

(b)

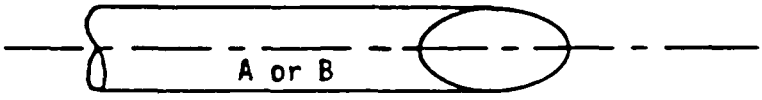

(c)

Properly constructed Type S pitot tubes shown in: (a) end view, face opening planes perpendicular to transverse axis; (b) top view, face opening planes parallel to longitudinal axis; (c) side view, both legs of equal length and centerlines coincident when viewed from both sides. Baseline coefficient values of 0.84 may be assigned to pitot tubes constructed this way.

TECHNOLOGY CORPORATION

PITOT TUBE INSPECTION DATA SHEET

Pitot Tube No. 002 Date 12-28-93 Inspector CAROL A. MILLER

α_1 degrees	α_2 degrees	β_1 degrees	β_2 degrees
2	1	0	0
<10°	<10°	<5°	<5°

D_t inches	P inches	1.05 D_t inches	1.50 D_t inches
.375	1.051	.394	.563
$0.185 \le P_t < 0.380$	-	-	-

γ degrees	φ degrees	$P_{\sin(\gamma)}$ inches	$P_{\sin(\varphi)}$ inches
0	0	0	0
-	-	<0.125	<0.03125

P_1 inches	P_2 inches	$\lvert P_1 - P_2 \rvert$ inches	Meet specifications
.518	.518	0	✓
$1.05\ D_t < P_1 < 1.50\ D_t$	$1.05\ D_t < P_2 < 1.50\ D_t$	≤0.010	

Lower line in each table is limits for meeting specifications.

Checked by JM Date 12/29/93

INTERNATIONAL TECHNOLOGY CORPORATION

6543

PITOT TUBE INSPECTION DATA SHEET

Pitot Tube No. 300 Date 12-28-93 Inspector CAROL A. MILLER

α_1 degrees	α_2 degrees	β_1 degrees	β_2 degrees
1	1	2	4
<10°	<10°	<5°	<5°

D_t inches	P inches	1.05 D_t inches	1.50 D_t inches
.375	.945	394	.562
$0.185 \le P_t < 0.380$	-	-	-

γ degrees	φ degrees	$P_{\sin(\gamma)}$ inches	$P_{\sin(\varphi)}$ inches
0	1	0	.016
-	-	<0.125	<0.03125

P_1 inches	P_2 inches	$\lvert P_1 - P_2 \rvert$ inches	Meet specifications
.482	.480	.002	✓
$1.05\ D_t < P_1 < 1.50\ D_t$	$1.05\ D_t < P_2 < 1.50\ D_t$	≤0.010	

Lower line in each table is limits for meeting specifications.

Checked by [signature] Date 12/29/93

000246

INTERNATIONAL TECHNOLOGY CORPORATION

PITOT TUBE INSPECTION DATA SHEET

Pilot Tube No. 502 Date 12-28-93 Inspector CAROL A. MILLER

α_1 degrees	α_2 degrees	β_1 degrees	β_2 degrees
2	0	1	1
<10°	<10°	<5°	<5°

D_t inches	P inches	1.05 D_t inches	1.50 D_t inches
.374	1.010	.393	.561
$0.185 \le P_t < 0.380$	-	-	-

γ degrees	φ degrees	$P_{\sin(\gamma)}$ inches	$P_{\sin(\varphi)}$ inches
1	0	.018	0
-	-	<0.125	<0.03125

P_1 inches	P_2 inches	$\lvert P_1 - P_2 \rvert$ inches	Meet specifications
0.512	.514	.002	✓
$1.05\ D_t < P_1 < 1.50\ D_t$	$1.05\ D_t < P_2 < 1.50\ D_t$	≤0.010	

Lower line in each table is limits for meeting specifications.

Checked by JM Date 12/29/93

Dry Gas Meter and Orifice Meter

The following page shows the Calibration Setup used for the initial and post-test calibration. A wet-test meter with a 2-cubic-feet-per-minute capacity and ±1 percent accuracy is used. The pump is run for approximately 15 minutes at an orifice manometer setting of 0.5 in.H_2O to heat up the pump and wet the interior surface of the wet-test meter. The information in the following example Calibration Data Sheet is gathered for the initial calibration; the ratio of accuracy of the wet-test meter to the dry-test meter and the ΔH@ are then calculated.

Post-Test Meter Calibration Check

A post-test meter calibration check is made on each meter box used during the test to check its accuracy against the last calibration check. This post-test calibration must be within ±5 percent of the initial calibration. The initial calibration is performed as described in APTD-0576. The post-test calibration is performed by the same method. Three calibration runs are made by using the average orifice setting obtained during each test run and setting the vacuum at the maximum value obtained during each test run. The post-test calibration check indicated that all three runs for each meter box were within the ± 5 percent range allowed by EPA Method 5.*

The Particulate Sampling Meter Box Initial Calibration and Post-Test Calibration data sheets are included in the following pages.

* 40 CFR 60, Appendix A, July 1990.

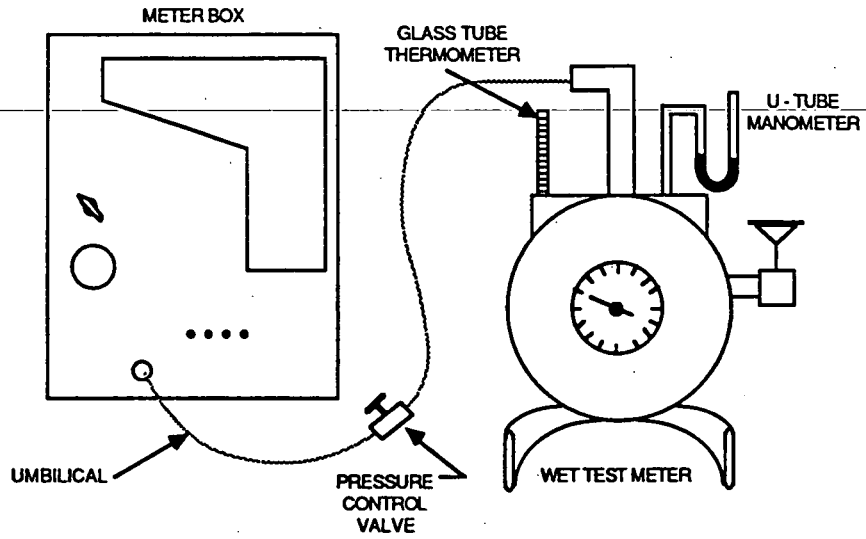

Calibration setup.

DATE _____ METER BOX NO. _____

BAROMETRIC PRESSURE, P_b = _____ in. Hg. DRY GAS METER NO. _____

ORIFICE MANOMETER SETTING ΔH in. H_2O	GAS VOLUME WET TEST METER V_w, ft^3	GAS VOLUME DRY GAS METER V_d, ft^3	WET TEST METER T_w, °F	DRY GAS METER INLET t_{di}, °F	DRY GAS METER OUTLET t_{dn}, °F	DRY GAS METER AVERAGE t_d, °F	TIME $\varnothing$, min.	Y	$\Delta H@$
0.5	5								
1.0	5								
1.5	10								
2.0	10								
3.0	10								
4.0	10								

AVERAGE _____

ΔH	$\frac{\Delta H}{13.6}$	Y: $\frac{V_w P_b (t_d + 460)}{V_d (P_b + \frac{\Delta H}{13.6})(t_w + 460)}$	$\Delta H@$: $\frac{0.0317\,\Delta H}{P_b (t_d + 460)} \left[\frac{(t_w + 460)\varnothing}{V_w}\right]^2$
0.5	0.0368		
1.0	0.0737		
1.5	0.110		
2.0	0.147		
3.0	0.221		
4.0	0.294		

Y = Ratio of accuracy of wet test meter to dry test meter. Tolerance = ± 0.01
$\Delta H@$ = Orifice of pressure differential that gives 0.75 cfm of air at 70° F and 29.92 inches of mercury, in H_g). Tolerance = ± 0.15.

Calibration data sheet.

INTERNATIONAL TECHNOLOGY CORPORATION

METER BOX INITIAL CALIBRATION

validated 1-1/8/90

Date: 9/28/93 Meter Box No.: FT-5

Barometric Pressure, (Pbar): 29.44 Calibrator: Neese

Run No.	Orifice manometer setting* ΔH in. H2O	Wet test meter volume Vw ft3	Dry gas meter volume Vd ft3	Temperatures: Wet test meter Tw °F	Temperatures: Dry gas meter Inlet Tdi °F	Temperatures: Dry gas meter Outlet Tdo °F	Temperatures: Dry gas meter Average Td °F	Vacuum setting** in. Hg	Duration of run, Ø min.	Duration of run, Ø sec
1			564.105	64	80	64				
	0.50	5.000	569.494	64	76	64	71.0	10	11	0
2			569.942	64	76	64				
	1.00	10.000	580.705	64	80	64	71.0	10	15	32
3			552.548	64	84	66				
	1.50	10.000	563.281	64	82	65	74.3	10	12	41
4			581.358	63	80	64				
	2.00	11.000	593.151	63	86	66	74.0	10	12	6
5			593.631	63	86	66				
	3.00	10.000	604.296	63	89	67	77.0	10	9	2
6			541.152	64	82	64				
	4.00	10.000	551.783	64	84	66	74.0	10	7	49

Run No.	Y	ΔH@
1	0.939	1.35
2	0.939	1.34
3	0.946	1.34
4	0.948	1.33
5	0.956	1.34
6	0.949	1.35
Pretest average	0.946	1.34
Difference*=	0.010	0.02 1

$$y = \frac{(Vw)(Pbar)(Td+460)}{(Vd)(Pbar+\Delta H/13.6)(Tw+460)}$$

$$\Delta H@ = \frac{(0.0317)(\Delta H) \times}{(Pbar)(Td+460)} \left| \frac{(Tw+460) \quad (Ø)}{Vw} \right|^2$$

Data checked by: MJ

Date: 9/30/93

* Y must not deviate by more than ±0.02Y.

ΔH@ must not deviate by more than ±0.15 ΔH@ average

E-15

000250

6543

000251

INTERNATIONAL TECHNOLOGY CORPORATION

METER BOX POST-TEST CALIBRATION

validated 10/24/90

Date:	8/15/94	Meter Box No.:	FT-5		
Barometric Pressure, (Pbar):	29.62	Initial Y:	0.946	ΔH@:	1.34
Plant:	FERMCO	Project No.:	332331		
Project Manager:	D.O.	Calibrator:	P.F.		

Run No.	Orifice manometer setting* ΔH in. H2O	Wet test meter volume Vw ft3	Dry gas meter volume Vd ft3	Temperatures: Wet test meter Tw °F	Temperatures: Dry gas meter Inlet Tdi °F	Temperatures: Dry gas meter Outlet Tdo °F	Temperatures: Dry gas meter Average Td °F	Vacuum setting** in. Hg	Duration of run, Ø min.	Duration of run, Ø sec
1	1.00	11.000	800.390	70	82	75	81.3	5	17	7
			812.361	70	91	77				
2	1.00	10.000	812.361	70	91	77	85.0	5	15	36
			823.301	70	93	79				
3	1.00	10.000	823.301	70	93	79	87.0	5	15	37
			834.287	70	95	81				

Run No.	Y	ΔH@
1	0.936	1.34
2	0.938	1.34
3	0.937	1.34
Post-test average***	0.937	1.34
Difference from Pretest ***=	-0.010	0.00

$$y = \frac{(Vw)(Pbar)(Td+460)}{(Vd)(Pbar+\Delta H/13.6)(Tw+460)}$$

$$\Delta H@ = \frac{(0.0317)(\Delta H)}{(Pbar)(Td+460)} \times \left[\frac{(Tw+460)\ (Ø)}{Vw}\right]^2$$

* To be the average ΔH used during the test series.
** To be the highest vacuum used during the test series.
*** Post-test Y must be within ±0.05 initial Y.
ΔY = (Posttest Y - Initial Y) / Initial Y
Post-test ΔH@ must be within ±0.15 in.H2O of the intial ΔH@.
ΔH@ difference = Posttest ΔH@ - Initial ΔH@

Data checked by: JM
Date: 8-25-94

INTERNATIONAL TECHNOLOGY CORPORATION

METER BOX INITIAL CALIBRATION

validated 11/8/90

Date: 12/30/93 — Meter Box No.: FT-8

Barometric Pressure, (Pbar): 29.85 — Calibrator: Neese

Run No.	Orifice manometer setting* ΔH In. H2O	Wet test meter volume Vw ft3	Dry gas meter volume Vd ft3	Temperatures: Wet test meter Tw °F	Dry gas meter Inlet Tdi °F	Dry gas meter Outlet Tdo °F	Dry gas meter Average Td °F	Vacuum setting** In. Hg	Duration of run, Ø min.	Duration of run, Ø sec
1	0.50	5.000	809.842	67	75	68	71.5	10	11	36
			814.988	67	75	68				
2	1.00	11.500	815.711	67	75	68	72.3	10	18	48
			827.596	67	76	70				
3	1.50	10.000	828.077	67	76	70	73.0	10	13	43
			838.445	67	76	70				
4	2.00	10.000	838.757	67	76	70	73.0	10	11	48
			849.159	67	76	70				
5	3.00	12.000	849.733	67	76	70	73.0	10	11	38
			862.228	67	76	70				
6	4.00	15.000	862.929	67	76	70	73.0	10	12	38
			878.568	67	76	70				

Run No.	Y	ΔH@
1	0.979	1.49
2	0.975	1.48
3	0.972	1.56
4	0.968	1.54
5	0.964	1.56
6	0.961	1.57
Pretest average	0.970	1.53
Difference*=	0.009	0.09 5

$$y = \frac{(Vw)(Pbar)(Td+460)}{(Vd)(Pbar+\Delta H/13.6)(Tw+460)}$$

$$\Delta H@ = \frac{(0.0317)(\Delta H) \times}{(Pbar)(Td+460)} \left[\frac{(Tw+460)\ (Ø)}{Vw}\right]^2$$

Data checked by: HB

Date: 1-3-94

* Y must not deviate by more than ±0.02Y.

ΔH@ must not deviate by more than ±0.15 ΔH@ average

000252

6543

INTERNATIONAL TECHNOLOGY CORPORATION

METER BOX POST-TEST CALIBRATION

validated 10/24/90

Date:	8/15/94	Meter Box No.:	FT-8		
Barometric Pressure, (Pbar):	29.62	Initial Y:	0.970	ΔH@:	1.53
Plant:	FERMCO	Project No.:	332331		
Project Manager:	D.O.	Calibrator:	P.F.		

Run No.	Orifice manometer setting* ΔH in. H2O	Wet test meter volume Vw ft3	Dry gas meter volume Vd ft3	Temperatures: Wet test meter Tw °F	Dry gas meter Inlet Tdi °F	Dry gas meter Outlet Tdo °F	Dry gas meter Average Td °F	Vacuum setting** in. Hg	Duration of run, Ø min.	Duration of run, Ø sec
1	1.53	10.000	14.244	70	72	72	73.0	4	13	22
			24.378	70	76	72				
2	1.53	10.000	24.378	70	76	72	76.0	4	13	25
			34.594	70	82	74				
3	1.53	10.000	34.594	70	82	74	80.0	4	13	27
			44.885	70	88	76				

Run No.	Y	ΔH@
1	0.989	1.54
2	0.986	1.54
3	0.986	1.54
Post-test average***	0.987	1.54
Difference from Pretest ***=	0.018	0.01

$$y = \frac{(Vw)(Pbar)(Td+460)}{(Vd)(Pbar+\Delta H/13.6)(Tw+460)}$$

$$\Delta H@ = \frac{(0.0317)(\Delta H)\ x}{(Pbar)(Td+460)} \left| \frac{(Tw+460)\ (Ø)}{Vw} \right|^2$$

* To be the average ΔH used during the test series.
** To be the highest vacuum used during the test series.
*** Post-test Y must be within ±0.05 initial Y.
ΔY = (Posttest Y - Initial Y) / Initial Y
Post-test ΔH@ must be within ±0.15 in.H2O of the intial ΔH@.
ΔH@ difference = Posttest ΔH@ - Initial ΔH@

Data checked by: JG
Date: 8/15/94

000253

INTERNATIONAL TECHNOLOGY CORPORATION

METER BOX INITIAL CALIBRATION

validated 11/8/90

Date: 9/28/94 — Meter Box No.: FT-9

Barometric Pressure, (Pbar): 29.82 — Calibrator: Neese

Run No.	Orifice manometer setting* ΔH in. H2O	Wet test meter volume Vw ft3	Dry gas meter volume Vd ft3	Temperatures: Wet test meter Tw °F	Dry gas meter Inlet Tdi °F	Dry gas meter Outlet Tdo °F	Dry gas meter Average Td °F	Vacuum setting** in. Hg	Duration of run, Ø min.	Duration of run, Ø sec
1	0.50	5.000	714.316	65	74	68	70.8	10	11	40
			719.477	65	73	68				
2	1.00	10.000	703.527	65	72	67	70.3	10	16	45
			713.864	65	74	68				
3	1.50	10.000	719.944	65	74	68	71.0	10	13	47
			730.297	65	74	68				
4	2.00	12.000	730.638	65	74	68	71.8	10	14	24
			743.085	65	76	69				
5	3.00	10.000	743.425	65	76	69	73.0	10	9	39
			753.804	65	77	70				
6	4.00	13.000	754.330	65	77	70	73.8	10	11	12
			767.811	65	78	70				

Run No.	Y	ΔH@
1	0.978	1.50
2	0.975	1.55
3	0.973	1.57
4	0.972	1.59
5	0.971	1.54
6	0.971	1.63
Pretest average	0.973	1.56
Difference*=	0.005	0.~~13~~ .07

$$y = \frac{(Vw)(Pbar)(Td+460)}{(Vd)(Pbar+\Delta H/13.6)(Tw+460)}$$

$$\Delta H@ = \frac{(0.0317)(\Delta H)}{(Pbar)(Td+460)} \times \left[\frac{(Tw+460)\ (Ø)}{Vw}\right]^2$$

Data checked by: HJB

Date: 9/28/94

* Y must not deviate by more than ±0.02Y.

ΔH@ must not deviate by more than ±0.15 ΔH@ average

000254

6543

INTERNATIONAL TECHNOLOGY CORPORATION

METER BOX POST-TEST CALIBRATION

validated 10/24/90

Date: 9/21/94
Barometric Pressure, (Pbar): 29.65
Plant: Fernald
Project Manager: Osterhout

Meter Box No.: FT-9
Initial Y: 0.951
Project No.: 332331
Calibrator: Neese

ΔH@: 1.60

Run No.	Orifice manometer setting* ΔH in. H2O	Wet test meter volume Vw ft3	Dry gas meter volume Vd ft3	Temperatures: Wet test meter Tw °F	Temperatures: Dry gas meter Inlet Tdi °F	Temperatures: Dry gas meter Outlet Tdo °F	Temperatures: Dry gas meter Average Td °F	Vacuum setting** in. Hg	Duration of run, Ø min.	Duration of run, Ø sec
1	1.50	10.000	546.958	70	72	72	73.8	2	13	32
			557.623	70	77	74				
2	1.50	10.000	557.623	70	77	74	77.5	2	13	32
			568.338	70	82	77				
3	1.50	10.000	568.338	70	82	77	81.3	2	13	39
			579.088	70	87	79				

Run No.	Y	ΔH@
1	0.941	1.55
2	0.943	1.54
3	0.946	1.55
Post-test average***	0.943	1.54
Difference from Pretest ***=	-0.008	-0.06

$$y = \frac{(Vw)(Pbar)(Td+460)}{(Vd)(Pbar+\Delta H/13.6)(Tw+460)}$$

$$\Delta H@ = \frac{(0.0317)(\Delta H)}{(Pbar)(Td+460)} \times \left[\frac{(Tw+460)\ (Ø)}{Vw}\right]^2$$

* To be the average ΔH used during the test series.
** To be the highest vacuum used during the test series.
*** Post-test Y must be within ±0.05 initial Y.
ΔY = (Posttest Y - Initial Y) / Initial Y
Post-test ΔH@ must be within ±0.15 in.H2O of the intial ΔH@.
ΔH@ difference = Posttest ΔH@ - Initial ΔH@

Data checked by: MJ
Date: 10-3-94

000255

INTERNATIONAL TECHNOLOGY CORPORATION

METER BOX INITIAL CALIBRATION

validated 11/8/90

Date: 1/25/94
Barometric Pressure, (Pbar): 29.64

Meter Box No.: FT-11
Calibrator: Neese

Run No.	Orifice manometer setting* ΔH in. H2O	Wet test meter volume Vw ft3	Dry gas meter volume Vd ft3	Temperatures: Wet test meter Tw °F	Dry gas meter Inlet Tdi °F	Dry gas meter Outlet Tdo °F	Dry gas meter Average Td °F	Vacuum setting** in. Hg	Duration of run, Ø min.	Duration of run, Ø sec
1	0.50	5.000	426.522	69	79	71	74.5	10	12	45
			431.717	69	77	71				
2	1.00	10.000	432.218	69	77	71	74.3	10	18	13
			442.588	69	77	72				
3	1.50	10.000	442.948	69	77	72	74.3	10	14	42
			453.297	69	77	71				
4	2.00	10.000	453.636	69	77	71	74.3	10	12	44
			463.948	69	78	71				
5	3.00	10.000	464.534	69	78	71	75.0	10	10	15
			474.787	69	79	72				
6	4.00	10.000	475.434	69	79	72	75.5	10	8	52
			485.649	69	79	72				

Run No.	Y	ΔH@
1	0.971	1.82
2	0.971	1.86
3	0.972	1.82
4	0.975	1.82
5	0.979	1.76
6	0.981	1.76
Pretest average	0.975	1.81
Difference*=	0.006	0.~~10~~ .05 DTR

$$y = \frac{(Vw)(Pbar)(Td+460)}{(Vd)(Pbar+\Delta H/13.6)(Tw+460)}$$

$$\Delta H@ = \frac{(0.0317)(\Delta H)}{(Pbar)(Td+460)} \times \left[\frac{(Tw+460)\ (Ø)}{Vw}\right]^2$$

Data checked by: [signature]
Date: 1-25-94

* Y must not deviate by more than ±0.02Y.
ΔH@ must not deviate by more than ±0.15 ΔH@ average

000256

6543

INTERNATIONAL TECHNOLOGY CORPORATION

METER BOX POST-TEST CALIBRATION

validated 10/24/90

Date: 9/21/94
Barometric Pressure, (Pbar): 29.65
Plant: Fernald
Project Manager: Osterhout

Meter Box No.: FT-11
Initial Y: 0.975
Project No.: 332331
Calibrator: Neese

ΔH@: 1.81

Run No.	Orifice manometer setting* ΔH in. H2O	Wet test meter volume Vw ft3	Dry gas meter volume Vd ft3	Temperatures: Wet test meter Tw °F	Temperatures: Dry gas meter Inlet Tdi °F	Temperatures: Dry gas meter Outlet Tdo °F	Temperatures: Dry gas meter Average Td °F	Vacuum setting** in. Hg	Duration of run, Ø min.	Duration of run, Ø sec
1	1.81	10.000	517.031	68	70	65	69.0	3	12	51
			527.254	68	74	67				
2	1.81	10.000	527.254	68	74	67	71.5	3	13	7
			537.541	68	76	69				
3	1.81	10.000	537.541	68	76	69	73.5	3	13	8
			547.850	68	78	71				

Run No.	Y	ΔH@
1	0.976	1.68
2	0.974	1.75
3	0.976	1.74
Post-test average***	0.975	1.72
Difference from Pretest ***=	0.000	-0.09

$$y = \frac{(Vw)(Pbar)(Td+460)}{(Vd)(Pbar+\Delta H/13.6)(Tw+460)}$$

$$\Delta H@ = \frac{(0.0317)(\Delta H)}{(Pbar)(Td+460)} \times \left[\frac{(Tw+460)\ (Ø)}{Vw}\right]^2$$

* To be the average ΔH used during the test series.
** To be the highest vacuum used during the test series.
*** Post-test Y must be within ±0.05 initial Y.
ΔY = (Posttest Y - Initial Y) / Initial Y
Post-test ΔH@ must be within ±0.15 in.H2O of the intial ΔH@.
ΔH@ difference = Posttest ΔH@ - Initial ΔH@

Data checked by: JJ
Date: 9/21/94

Stack Thermocouples

Each thermocouple is calibrated by comparing it with an ASTM-3F thermometer at approximately 32°F, ambient temperature, 100°F, and 500°F. The thermocouple read within 1.5 percent of the reference thermometer throughout the entire range when expressed in degrees Rankine. If the stack gas is saturated with moisture, the thermocouple is calibrated at 10° intervals between 70° and 180°F using a water bath. The thermocouple agreed within ±2°F of the reference thermometer over the entire range. The thermocouples may be checked at ambient temperature at the test site to verify the calibration. Calibration data are included in the following Thermocouple Calibration Data Sheet(s).

INTERNATIONAL TECHNOLOGY CORPORATION

THERMOCOUPLE CALIBRATION DATA SHEET

Date: 12/27/93 Thermocouple No: 100

Calibrator: H-Bowlby Reference: ASTM-3F

Range: _____

Reference point no.	Source*	Reference thermometer temperature °F	Thermocouple temperature °F	Difference %**
1	2	68	69	-.19
2	1	32	34	-.41
3	3	138	137	.17
4	4	445	442	.33

* Source: 1) Ice bath
2) Ambient
3) Water bath
4) Oil bath

** Percent difference.

$$\frac{\text{Reference temp. °R - thermocouple temp. °R}}{\text{(Reference temp. °R)}} \times 100\%$$

where °R = °F + 460

Each percent difference must be less than or equal to 1.5%.

Checked by [signature] Date 1/19/94

000259

INTERNATIONAL TECHNOLOGY CORPORATION

THERMOCOUPLE CALIBRATION DATA SHEET

Date: 12/27/93 Thermocouple No: 425

Calibrator: H Bowlos Reference: ASTM-3F

Range:

Reference point no.	Source*	Reference thermometer temperature °F	Thermocouple temperature °F	Difference %**
1	2	70	71	-.19
2	1	33	34	-.20
3	3	186	185	+.15
4	4	429	430	-.11

* Source: 1) Ice bath
2) Ambient
3) Water bath
4) Oil bath

** Percent difference.

$$\frac{\text{Reference temp. °R - thermocouple temp. °R}}{\text{(Reference temp. °R)}} \times 100\%$$

where °R = °F + 460

Each percent difference must be less than or equal to 1.5%.

Checked by [signature] Date 1/19/94

000260

INTERNATIONAL TECHNOLOGY CORPORATION

THERMOCOUPLE CALIBRATION DATA SHEET

Date: 12/27/93 Thermocouple No: 432

Calibrator: H. Bowles Reference: ASTM-31F

Range: _____

Reference point no.	Source*	Reference thermometer temperature °F	Thermocouple temperature °F	Difference %**
1	2	72	72	—
2	1	32	34	-.41
3	3	182	185	-.47
4	4	404	406	-.23

* Source: 1) Ice bath
2) Ambient
3) Water bath
4) Oil bath

** Percent difference.

$$\frac{\text{Reference temp. °R - thermocouple temp. °R}}{\text{(Reference temp. °R)}} \times 100\%$$

where °R = °F + 460

Each percent difference must be less than or equal to 1.5%.

Checked by JM Date 1/19/94

000261

Digital Indicators for Thermocouple Readout

A digital indicator is calibrated by feeding a series of millivolt signals to the input and comparing the indicator reading with the reading the signal should have generated. Error did not exceed 0.5 percent when the temperatures were expressed in degrees Rankine. Calibration data are included in the following Thermocouple Digital Indicator Calibration Data Sheet(s).

INTERNATIONAL TECHNOLOGY CORPORATION

DIGITAL INDICATOR CALIBRATION DATA SHEET

DATE: 9-27-93 INDICATOR: FT-5

OPERATOR: J. Neese

Test Point Number	Equivalent Temperature, °F T_e	Digital Indicator Temperature, °F T_{di}	Difference,* %
1	0	1	.22
2	100	100	0
3	200	201	.15
4	300	300	0
5	400	399	.12
6	500	501	.10
7	1000	1002	.14
8	1300	1301	.06
9	1600	1602	.10
10	1900	1901	.04

*PERCENT DIFFERENCE MUST BE LESS THAN OR EQUAL TO 0.5%

$$\% \text{ DIFFERENCE} = \frac{(T_e, °F - T_{di}, °F)}{(T_e, °F + 460)} \times 100$$

Checked By [illegible] Date 9/30/93

000263

INTERNATIONAL TECHNOLOGY CORPORATION

DIGITAL INDICATOR CALIBRATION DATA SHEET

DATE: 12-30-93 INDICATOR: FT-8

OPERATOR: J. Neese

Test Point Number	Equivalent Temperature, °F T_e	Digital Indicator Temperature, °F T_{dI}	Difference,* %
1	0	0	0
2	100	98	.36
3	200	201	.15
4	300	298	.26
5	400	397	.35
6	500	497	.31
7	1000	996	.27
8	1300	1293	.40
9	1600	1592	.39
10	1900	1889	.47

*PERCENT DIFFERENCE MUST BE LESS THAN OR EQUAL TO 0.5%

$$\% \text{ DIFFERENCE} = \frac{(T_e, °F - T_{di}, °F)}{(T_e, °F + 460)} \times 100$$

Checked By MB Date 1/3/94

INTERNATIONAL TECHNOLOGY CORPORATION

DIGITAL INDICATOR CALIBRATION DATA SHEET

DATE: 9-28-94 INDICATOR: FT-9

OPERATOR: J. Neese

Test Point Number	Equivalent Temperature, °F T_e	Digital Indicator Temperature, °F T_{di}	Difference,* %
1	0	0	0
2	100	99	.18
3	200	201	.15
4	300	298	.26
5	400	398	.23
6	500	497	.31
7	1000	996	.27
8	1300	1293	.40
9	1600	1592	.39
10	1900	1889	.47

*PERCENT DIFFERENCE MUST BE LESS THAN OR EQUAL TO 0.5%

$$\% \text{ DIFFERENCE} = \frac{(T_e, °F - T_{di}, °F)}{(T_e, °F + 460)} \times 100$$

Checked By: [illegible] Date: 9/28/94

000265

INTERNATIONAL TECHNOLOGY CORPORATION

DIGITAL INDICATOR CALIBRATION DATA SHEET

DATE: 1-25-94 INDICATOR: FT-11

OPERATOR: J. Neese

Test Point Number	Equivalent Temperature, °F T_e	Digital Indicator Temperature, °F T_{dI}	Difference,* %
1	0	1	.22
2	100	98	.36
3	200	201	.15
4	300	298	.26
5	400	398	.23
6	500	497	.31
7	1000	998	.14
8	1300	1295	.28
9	1600	1596	.19
10	1900	1893	.30

*PERCENT DIFFERENCE MUST BE LESS THAN OR EQUAL TO 0.5%

$$\% \text{ DIFFERENCE} = \frac{(T_e, °F - T_{di}, °F)}{(T_e, °F + 460)} \times 100$$

Checked By DI Date 1-25-94

Dry Gas Thermocouples and Impinger Thermocouples

The dry gas thermocouples are calibrated by comparing them with an ASTM-3F thermometer at approximately 32°F, ambient temperature, and a higher temperature between approximately 100° and 200°F. The thermocouples agreed within 5°F of the reference thermometer. The impinger thermocouples are checked in a similar manner at approximately 32°F and ambient temperature, and they agreed within 2°F. The thermocouples may be checked at ambient temperature prior to the test series to verify calibration. Calibration data are included in the following Dry Gas Thermometer and Impinger Thermocouple Calibration Data Sheet(s).

INTERNATIONAL TECHNOLOGY CORPORATION

6543

DRY GAS THERMOCOUPLE CALIBRATION DATA SHEET

Date: 9-27-93 Thermocouple No: FT-5

Calibrator: J. Neese Reference: ASTM

Inlet

Reference point no.	Source*	Reference thermometer temperature °F	Thermocouple temperature °F	Difference °F**
1	1	68	66	2
2	2	36	35	1
3	3	144	142	2

Outlet

Reference point no.	Source*	Reference thermometer temperature °F	Thermocouple temperature °F	Difference °F**
1	1	68	67	1
2	2	36	36	0
3	3	144	142	2

* Source: 1) Ambient
2) Ice bath
3) Water bath

** Difference must be less than 5°F at both points.

Checked by [illegible] Date 9/30/93

000268

INTERNATIONAL TECHNOLOGY CORPORATION

DRY GAS THERMOCOUPLE CALIBRATION DATA SHEET

Date: 12-30-93 Thermocouple No: FT-8

Calibrator: J. Neese Reference: ASTM

Inlet

Reference point no.	Source*	Reference thermometer temperature °F	Thermocouple temperature °F	Difference °F**
1	1	68	66	2
2	2	32	32	0
3	3	190	192	2

Outlet

Reference point no.	Source*	Reference thermometer temperature °F	Thermocouple temperature °F	Difference °F**
1	1	68	67	1
2	2	32	32	0
3	3	190	188	2

* Source: 1) Ambient
2) Ice bath
3) Water bath

** Difference must be less than 5°F at both points.

Checked by HB Date 1/3/94

000269

INTERNATIONAL TECHNOLOGY CORPORATION

6543

DRY GAS THERMOCOUPLE CALIBRATION DATA SHEET

Date: 9-28-94 Thermocouple No: FT-9

Calibrator: J. Neese Reference: ASTM-3F

Inlet

Reference point no.	Source*	Reference thermometer temperature °F	Thermocouple temperature °F	Difference °F**
1	1	68	69	1
2	2	34	35	1
3	3	152	154	2

Outlet

Reference point no.	Source*	Reference thermometer temperature °F	Thermocouple temperature °F	Difference °F**
1	1	68	69	1
2	2	34	35	1
3	3	152	155	3

* Source: 1) Ambient
2) Ice bath
3) Water bath

** Difference must be less than 5°F at both points.

Checked by [illegible] Date 9/28/94

000270

INTERNATIONAL TECHNOLOGY CORPORATION

DRY GAS THERMOCOUPLE CALIBRATION DATA SHEET

Date: 1-25-94 Thermocouple No: FT-11

Calibrator: J. Neese Reference: ASTM

Inlet

Reference point no.	Source*	Reference thermometer temperature °F	Thermocouple temperature °F	Difference °F**
1	1	72	70	2
2	2	34	34	0
3	3	158	158	0

Outlet

Reference point no.	Source*	Reference thermometer temperature °F	Thermocouple temperature °F	Difference °F**
1	1	72	70	2
2	2	34	34	0
3	3	158	159	1

* Source: 1) Ambient
2) Ice bath
3) Water bath

** Difference must be less than 5°F at both points.

Checked by G Hess Date 1-25-94

000271

INTERNATIONAL TECHNOLOGY CORPORATION

IMPINGER THERMOCOUPLE CALIBRATION DATA SHEET

Date: 12/27/93 Thermocouple No: I-1

Calibrator: H. Bowles Reference: ASTM - 3F

Reference point no.	Source*	Reference thermometer temperature °F	Thermocouple temperature °F	Difference °F**
1	1	72	72	—
2	2	33	35	2

* Source: 1) Ambient
2) Ice bath

** Difference must be less than 2°F at both points.

Checked by JM Date 1/19/94

IMPINGER THERMOCOUPLE CALIBRATION DATA SHEET

Date: 12/27/93 Thermocouple No: I-6

Calibrator: H. Bowles Reference: ASTM-3F

Reference point no.	Source*	Reference thermometer temperature °F	Thermocouple temperature °F	Difference °F**
1	1	72	74	2
2	2	33	34	1

* Source: 1) Ambient
2) Ice bath

** Difference must be less than 2°F at both points.

Checked by JM Date 1/19/94

INTERNATIONAL TECHNOLOGY CORPORATION

IMPINGER THERMOCOUPLE CALIBRATION DATA SHEET

Date: 3-22-94 Thermocouple No: I-97

Calibrator: J Neese Reference: ASTM

Reference point no.	Source*	Reference thermometer temperature °F	Thermocouple temperature °F	Difference °F**
1	1	70	71	1
2	2	34	34	0

* Source: 1) Ambient
2) Ice bath

** Difference must be less than 2°F at both points.

Checked by [signature] Date 3-22-94

Trip Balance

The trip balance is calibrated by comparing it with Class-S standard weights, and it agreed within 0.5 g. Calibration data are shown in the following Trip Balance Calibration Data Sheet(s).

INTERNATIONAL TECHNOLOGY CORPORATION

6543

TRIP BALANCE CALIBRATION DATA SHEET

Balance No.	Date	Calibrator	Mass determined for					
			5 g	Error	50 g	Error	100 g	Error
422	1/25/94	J. Neese	4.9	0.1	50.0	0.0	100.0	0.0
Mettler	1/25/94	J. Neese	5.0	0.0	50.0	0.0	100.0	0.0
199	1/25/94	J. Neese	5.0	0.0	50.0	0.0	99.9	0.1
421	1/25/94	J. Neese	5.2	0.2	50.3	0.3	100.3	0.3
419	1/25/94	J. Neese	5.0	0.0	49.9	0.1	99.9	0.1
198	1/25/94	J. Neese	5.0	0.0	50.0	0.0	100.0	0.0

Error must not exceed 0.5 grams at each point.

Checked by [signature] Date 1-25-94

000270

Barometer

The field barometer is calibrated to within 0.1 in.Hg of an NBS-traceable mercury-in-glass barometer before the test series. It is checked against the reference barometer after each test series to determine if it reads within 0.2 in.Hg. The barometer read within the allowable limits each time. Calibration data are included in the following Barometer Calibration Log(s).

BAROMETER CALIBRATION LOG

	BAROMETER NO.	408	408	408	401	408	408	408
	Client	Amoco	Sunoco/AG	Ford	FERMCO	Stone & Webster	GE	DuPont
	Project No.	332411	332413	332417	332331	421	332410	
RETEST	BAROMETER READING	29.54	29.54	29.60	29.63	29.59	29.42	29.50
	REFERENCE BAROMETER READING	29.53	29.54	29.57	29.62	29.56	29.40	29.50
	DIFFERENCE*	.01	.00	0.03	0.01	0.03	.02	.00
	DATE	8/29/94	8/29/94	9/6/94	9/9/94	9/16/94	9/23/94	9/29/94
	CALIBRATOR	PT	JG	BLG	DC	PT	JM	JM

	BAROMETER READING	29.54	29.60	29.59	29.57	29.42	29.50	
ST-TEST	REFERENCE BAROMETER READING	29.54	29.57	29.56	29.52	29.40	29.50	
	DIFFERENCE**	.00	.03	0.03	.05	.02	.00	
	DATE	8-29-94	9/6/94	9/16/94	10/3/94	9/23/94	9/29/94	
	CALIBRATOR	JG	JG	PT	DC	JM	JM	

*Barometer is adjusted so that difference does not exceed 0.05 in. Hg.
**Barometer is not adjusted. If difference exceed 0.10 in. Hg, inform project manager immediately.

BAROMETER CALIBRATION LOG

	BAROMETER NO.	415	431	401	406	408	431	408
	Client	DuPont	P&G	OSRAM Sylvania	[illegible] St. Louis	TVA	Farmingdale	Nalco
	Project No.							332408
PRETEST	BAROMETER READING	28.94	29.55	29.43	29.60	29.64	29.56	29.72
	REFERENCE BAROMETER READING	28.97	29.54	29.43	29.58	29.62	29.56	29.72
	DIFFERENCE*	0.03	0.01	0.0	0.02	0.02	.00	.00
	DATE	6/24/94	7/6/94	7/7/94	7/19/94	8/1/94	8/1/94	8-15-94
	CALIBRATOR	[illegible]	[illegible]	[illegible]	[illegible]	[illegible]	[illegible]	[illegible]

POST-TEST	BAROMETER READING		29.25	29.55	29.64	29.72	29.71	29.55
	REFERENCE BAROMETER READING	?	29.29	29.57	29.62	29.72	29.70	29.52
	DIFFERENCE**		0.04	.02	0.02	.00	0.01	0.03
	DATE		7/25/94	8/3/94	8/1/94	8-15-94	8/25/94	8/18/94
	CALIBRATOR		BGarls	[illegible]	[illegible]	[illegible]	[illegible]	BGarls

*Barometer is adjusted so that difference does not exceed 0.05 in. Hg.
**Barometer is not adjusted. If difference exceed 0.10 in. Hg, inform project manager immediately.

000279