6989

~~R-020-204.5~~
R-020-204.19

ANNUAL PROCEDURE UPDATE FROM LOW LEVEL RADIOACTIVE WASTE AND THORIUM MANAGEMENT PROGRAM, REMOVAL ACTION NUMBER 9

06/21/95

DOE-1106-95
DOE-FN EPAS
70 1142
REPORT

Department of Energy
Fernald Environmental Management Project
P. O. Box 398705
Cincinnati, Ohio 45239-8705
(513) 648-3155

JUN 21 1995

DOE-1106-95

Mr. James A. Saric, Remedial Project Director
U.S. Environmental Protection Agency
Region V - 5HRE-8J
77 W. Jackson Boulevard
Chicago, Illinois 60604-3590

Mr. Tom Schneider, Project Manager
Ohio Environmental Protection Agency
401 East 5th Street
Dayton, Ohio 45402-2911

Dear Mr. Saric and Mr. Schneider:

ANNUAL PROCEDURE UPDATE FOR LOW LEVEL RADIOACTIVE WASTE AND THORIUM MANAGEMENT PROGRAM, REMOVAL ACTION NUMBER 9

This letter transmits a compilation of updates to the Low Level Radioactive Waste and Thorium Management Program. This documentation fulfills the requirement to provide annual updates by June 30, 1995 to the U.S. Environmental Protection Agency (U.S. EPA) and the Ohio Environmental Protection Agency (OEPA) under the terms of the Amended Consent Agreement for Removal Action Number 9.

If there are any questions, please contact John H. Trygier at (513) 648-3154.

Sincerely,

Johnny Reising

FN:Trygier

fn Jack R. Craig
Fernald Remedial Action
Project Manager

Enclosure: As Stated

Recycled and Recyclable

cc w/enc:

K. H. Chaney, EM-423/GTN
B. Skokan, EM-423/GTN
G. Jablonowski, USEPA-V, 5HRE-8J
J. Kwasniewski, OEPA-Columbus
P. Harris, OEPA-Dayton
M. Proffitt, OEPA-Dayton
S. McClellan, PRC
R. Cohen, GeoTrans
F. Bell, ATSDR
R. Owen, ODOH
R. D. George, FERMCO/52-2
T. Hagen, FERMCO/65-2
AR Coordinator, FERMCO

cc w/o enc:

D. Rast, DOE-FN
J. Sattler, DOE-FN
S. Houser, FERMCO/52-3
K. Kolthoff, FERMCO/76
C. Little, FERMCO
M. West, FERMCO/35-1
K. Louis-Wojtas, FERMCO/76
M. Yates, FERMCO

6989

FERNALD ENVIRONMENTAL MANAGEMENT PROJECT

Removal Action No. 9

Documentation Supporting Removal of Waste Inventories

Low Level Radioactive Waste and Thorium Management Program

ANNUAL UPDATE

JUNE 1995

000003

Removal Action No. 9
Removal of Waste Inventories
Low Level Radioactive Waste and Thorium Management Program

ANNUAL UPDATE

Fernald Environmental Management Project

June 1995

U.S. DEPARTMENT OF ENERGY

A.

INDEX

A. Program Overview

Index

Purpose and Scope

Addition to Removal Action No. 9

Waste Shipment Summary

Three-Year Waste Shipment Forecast

B. Attachments

I. General Supporting Documentation

***DOE Order 5820.2A (10/28/93)

SSOP-0103,	FEMP Site Document System - replaced with MS-1001
*MS-08-1001,	FERMCO Site Procedure System - (2/1/95)
*SDI-100,	Site Document System Index - (monthly)
*DI-776,	Remediation Support Operations Document Program Index - (quarterly)
SSOP-0023,	Deviation and Corrective Action Reporting - revised to QA-0001
*QA-0001,	Processing Deviation and Corrective Action Reports - (2/16/95)
***RM-0002,	Centralized Training Department Training Manual (01/19/94)
*RM-0012,	Quality Assurance Program Description, Rev.3 - revised (11/30/94)

*Document new or revised since the last update and included in this submittal.

**Document available upon request

***No Change, document not included

FEMP Site Health and Safety Plan - replaced by SH-0001

**SH-0001,	Development of Project Specific Health and Safety Plans - (4/15/95)

II. Implementing Procedures

Step 1. Generate Waste

PO 307,	Control and Accountability of Nuclear Materials (6/30/93) - replaced by PO-SE-02
*PO-SE-02,	Management Plan, Materials Control and Accountability Section (5/1/95)
SOP 1-C-604,	Inspection of Containerized Refuse Material and Drummed Residues - replaced with 20-C-627
*20-C-627,	Liquid Removal from Containerized Low Level Radioactive Waste - (3/20/95)

Step 2. Sample and Characterize

SSOP-0002,	Initiating Waste Characterization Activities Using the Material Evaluation Form (MEF), Rev.4 - revised to EW-0001
*EW-0001,	Initiating Waste Characterization Activities Using the Material Evaluation Form (MEF), Rev.5 - (2/13/95)
SOP 20-C-805,	Sampling Drummed Waste for Hazard Identification - replaced by 20-C-806
*20-C-806,	Sampling Waste for Hazard Identification - (11/27/94)
***SOP 20-C-625,	Evaluating Low Level Radioactive Waste (LLRW) Bulk Waste Streams for Shipment, Rev.1 (2/4/94)

*Document new or revised since the last update and included in this submittal.

**Document available upon request

***No Change, document not included

***Waste Characterization Manual (7/21/93)

Step 3. Package for Storage

SSOP-0044,	Management of Excess Soil, Debris, and Waste from a Project, Rev.1 - redesignated to EW-0006
*EW-0006,	Management of Excess Soil, Debris, and Waste from a Project, Rev.1 (1/31/94)
PP-314,	Packaging, On-Site Movement and Off-Site Shipment of Material - redesignated to PT-0008
*PT-0008,	Packaging, On-Site Movement and Off-Site Shipment of Material (12/20/91)
*20-C-600,	Overpacking Defective Containers - revised and reissued (2/24/95)
*RM-0005,	FEMP Lot Marking and Coding System, Rev.6 - revised (3/17/95)

Step 4. Storage

SOP 1-C-608,	Storage of Radioactive Material - replaced by 20-C-623
*20-C-623,	Receipt and Storage of LLRW and Nuclear Material - revised (2/6/95)
*20-C-100,	Moving and Storing Depleted, Normal, and Enriched Uranium Materials <20% and Thorium Metal and Materials - (10/4/94)

Step 5. Package for Disposal

SSOP-0075,	Packaging of LLRW in Drums for Offsite Shipment - revised to PT-0005
*PT-0005,	Packaging of LLRW in Drums for Shipment To the NTS - REV.2 (3/31/95)
SSOP-0078,	Packaging of LLRW in ISO Containers for Offsite Shipment - revised to PT-0006

*Document new or revised since the last update and included in this submittal.

**Document available upon request

***No Change, document not included

*PT-0006,	Packaging of LLRW in ISO Containers for Shipment To the NTS - REV.2 (3/31/95)
SSOP-0079,	Packaging of LLRW in Metal Boxes for Offsite Shipment - REV.2 to PT-0007
*PT-0007,	Packaging of LLRW in Metal Boxes for Shipment To the NTS - revised (3/31/95)
SSOP-1027,	Managing PCBs and PCB Items - redesignated to EW-0014
*EW-0014,	Managing PCBs and PCB Items (3/8/94)
*1-C-306,	Crushing Scrap Drums - (1/7/94)
*1-C-918,	Thorium Overpacking - (6/21/93)
*2-C-923,	Trash Baler Operation - REV.0 (10/27/94)
*20-C-109,	Crushing Scrap Drums Using the Teemark Drum Packer/Crusher - (1/11/95)
SOP 20-C-604,	Control and Utilization of Contaminated Trash Dumpsters - replaced by PT-0009
*PT-0009,	Contaminated Trash Dumpsters - (5/1/95)
*20-C-020,	Inspection of LLRW and Nuclear Materials Containers (12/30/94)
*20-C-111,	Transport of LLRW and Nuclear Materials (2/6/95)
*20-C-500,	Inspection RCRA Waste Load/Unload and Staging Areas (9/7/94)

*Document new or revised since the last update and included in this submittal.

**Document available upon request

***No Change, document not included

*20-C-613,	Emptying Liquid Hazardous Waste Storage Containers (8/3/93)
*20-C-616,	Inspection of Hazardous Waste Management Units (9/7/94)
*20-C-630,	Receipt Inspection and Placement of Hazardous, Mixed, PCB, and Asbestos Waste into Storage (3/20/95)
*QP 12.03,	Certification of Waste Containers and Filling with LLRW for shipment to the NTS (Rev.2) (5/8/95)
*QP 12.07,	Certification of Waste Package Examination and Sealing for Offsite Shipment, Rev.1 - revised (2/27/95)

Step 6. Loading and Transport

***1-C-602,	Low Level Radioactive Waste Shipment Preparation Rev.3 (8/9/93)
***50-C-111,	Traffic Documentation for Low Level Radioactive Waste to the Nevada Test Site (4/15/94)
***50-C-112,	Preparation of Documentation for Low Level Radioactive Waste to the Nevada Test Site (4/15/94)
*50-C-107,	Inspection of Inbound Carrier Vehicles Used for LLRW, Hazardous Waste and/or Product Offsite Shipment - (12/5/94)
*50-C-108,	Loading LLRW Containers on Flatbeds for Offsite Shipment - (12/15/94)
*50-C-109,	Loading LLRW Containers on Vans for Offsite Shipment - (12/15/94)
*RC-RDA-006,	Radiological Survey Requirements for Radioactive Material Shipping and Receiving - REV.1 (10/5/94)

*Document new or revised since the last update and included in this submittal.

**Document available upon request

***No Change, document not included

*QP 12.04,	Certification of L-LRW Packages, Pre-Load Inspection Through Loaded Transport Vehicle Inspection, For Shipment to the Nevada Test Site (Rev.1) - revised (2/27/95)

Step 7. Disposal Facility Requirements and Criteria

**NVO-325,	Nevada Test Site Defense Waste Acceptance Criteria, Certification, and Transfer Requirements, Rev.1 - revised (6/92)

Step 8. Fernald Site Obtains Approval to Ship for Disposal

**FEMP Application to Ship Waste the Nevada Test Low Level Site, Rev.5.2 - revised (12/93)

***Waste Certification Program Plan for Low Level Waste Characterization and Certification, Rev.7 (12/93)

SSOP-0049,	FEMP Quality Assurance Audit Program, Rev.1 - redesignated to QA-0004
*QA-0004,	FEMP Quality Assurance Audit Program, Rev.1 (10/18/93)

Step 9. Waste Analysis and Characterization Plans Developed and Implemented

FMPC 2185,	Sampling Plans for Drummed Waste at the FMPC replaced by 93-290
**93-290,	Prototype for Sampling Waste at the FEMP, Rev.1 (3/94)

Step 10. Waste Minimization Plans Developed

***PL-FMPC 3009,	Waste Minimization Plan (4/7/94)

Step 11. Waste Minimization Activities Fully Implemented

***20-C-607,	Segregation of Wooden Pallets, Rev.1 (8/9/93)

*Document new or revised since the last update and included in this submittal.

**Document available upon request

***No Change, document not included

PURPOSE AND SCOPE

On August 30, 1991, the Department of Energy (DOE) submitted to the United States Environmental Protection Agency (U.S. EPA) a compendium of existing procedures and documents, in lieu of a Removal Action Work Plan, for Removal Action (RA) No. 9-Removal of Waste Inventories, Low Level Radioactive Waste and Thorium Management Program. This submittal of procedures, documents, and summaries due June 30, 1995, is intended to update the 1991 deliverable and subsequent annual updates.

RA No. 9 involves the characterization, overpacking, and disposition of low-level radioactive waste (LLRW). Large quantities of LLRW and thorium were first placed into waste pits and silos. In 1984, due to the lack of disposal unit capacity, wastes were placed into containers. Since 1986 all LLRW and thorium materials have been containerized and stored for future disposition. Current waste generation is limited to waste materials derived from activities relating to cleanup of the production operation.

The Fernald site has approval from the DOE Nevada Field Office to dispose of general waste streams at the Nevada Test Site (NTS). The wastes include process area scrap wastes (scrap metal and wood); construction and removal action waste (demolition debris); uranium production residues; thorium contaminated materials and residues; and baled trash.

To further reduce the risk to human health and the environment, RA No. 9 was expanded, in 1994, to include disposal of contaminated PCBs and PCB items at NTS. The Liquid Mixed Waste Disposal Project was initiated in 1995. This project involves the transfer of combustible and ignitable liquid mixed waste for shipment and treatment at the K-25 Toxic Substance Control Act (TSCA) Incinerator in Oak Ridge, Tennessee.

This update is organized the same as the original and the 1994 submittal. New and revised procedures, documents, and summaries are indicated and the appropriate documentation is included (unless otherwise noted). Documents that have not changed (NC), or have been canceled, are noted but not included.

To conserve resources, the DOE requests that future updates include a program overview; a list of procedures indicating the current revision and date; and a brief discussion of procedural changes and activities. If any agency requires a copy of a procedure, one would be made available. The intent is to serve the agencies, reduce costs, and still provide sufficient information to continue proper oversight of the activities within RA No. 9. Upon agreement with this change, it would be effective beginning with the June 1996 update.

The FERMCO Waste Programs Management/Remediation Support Operation Division Conduct of Operations ensures that proper procedures are in place to control RA No. 9 activities. Procedures controlling each activity throughout the operation have been identified and a training process has been established so that each operator is qualified to perform the designated task.

ADDITION TO REMOVAL ACTION NO. 9

The ongoing FEMP Low-Level Radioactive Waste (LLRW) and Thorium Management Programs, and associated waste shipment activities, were identified as Removal Action No. (RA) 9 by the Amended Consent Agreement of September 1991. The identification and management of polychlorinated biphenyls (PCBs) and PCB items within Operable Unit 3 (OU3) has been identified by the Department of Energy (DOE) as a new element of RA No. 9 and was included in the 1994 compendium.

In 1995, RA No. 9 was expanded to include the Liquid Mixed Waste Disposal Project, which includes the transfer of combustible and ignitable liquid mixed waste from approximately 2,300 drums and various small containers to a series of temporary storage vessels for sampling prior to shipment to the K-25 Toxic Substance Control Act (TSCA) incinerator in Oak Ridge, Tennessee. This project was described conceptually in the Draft Site Treatment Plan submitted to Ohio Environmental Protection Agency (OEPA) in August 1994 and in the Proposed Site Treatment Plan (PSTP) submitted in March 1995. Since the DOE Work Plan for the Liquid Mixed Waste Disposal Project was transmitted to U.S. EPA on April 17, 1995, it is not included in this compendium, but is available on request.

Building 65 thorium waste containers will be overpacked in 1996. Procedures and other documentation associated with this activity will be provided when the project is initiated.

IDENTIFICATION OF CURRENT WASTE STREAMS DESTINED FOR THE NEVADA TEST SITE

May 1995

ONL0000000001 Contaminated Process Area Scrap Wastes

This waste is generated in the dismantling of equipment and disposal of waste that has been stockpiled during FEMP operations. This remediation process generates scrap metal, scrap wood, and scrap vehicles.

ONL0000000002 Contaminated Construction/Removal Action Wastes

This waste is generated during the demolition or excavation phase of construction, maintenance, and removal action projects (e.g., crushed concrete, soil, broken pieces of wood).

ONL0000000006 Low/High Grade Residues

Low grade residues generally contain between 0.1% to 20% ^{238}U by weight and 0.2% to 2.0% ^{235}U relative to total uranium. These residues consist of uranium oxides and fluoride mixed with a wide variety of other materials and comprise approximately 70% of this waste stream.

High grade residues generally contain between 20% to 88% ^{238}U by weight and 0.2% to 2.0% ^{235}U relative to total uranium. These residues contain impurities or are mixtures of several uranium compounds.

ONL0000000007 Contaminated Trash

This material is generated in the daily office, material unpacking, and light clean-up operations. The waste is size-reduced in a compactor.

ONL000 0000009 Metal Melt Wastes

Remediation activities at the FEMP of dismantling equipment, disposing of scrap metal, and demolishing a construction, maintenance, or removal action project, produced radioactively contaminated metal waste. The low level scrap metal is separated from its loose oxides (mostly rust) and other debris and melted. The slag (containing about 95% of the total radiological contamination) is skimmed from the top of the melted metal and placed in a metal box to cool.

ONL0000000010 Radioactively-Contaminated Regulated Asbestos-Containing Material

Radioactively-contaminated asbestos-containing materials are generated at the FEMP during renovation, demolition, and remediation activities.

ONL0000000011 Thorium Residues and Wastes Not Amenable to Sampling

The sources of these wastes are the thorium production process and the remediation activities of the thorium production site. This material is not amenable to sampling.

ONL0000000012 Thorium Residues

This waste stream contains homogeneous thorium products and includes approximately one-third of the thorium inventory stored at the FEMP.

ONL0000000014 Vitrified Silo Residues

Solid glass-like material created by the vitrification of silo residues, sludge, and soils. The major constituents in the glass matrix are oxides of uranium, lead, calcium, iron, sodium, aluminum, barium, and potassium.

ONL0000000015 Stabilized Treated Waste

Paint chips and debris from building structures and equipment surfaces, grit and shot blast, furnace salts, sump cakes, construction rubble, and miscellaneous trash solidified in cement.

LOW LEVEL WASTE SHIPPING PROGRAM

FEMP

PROGRAM HISTORY

Total Cubic Feet

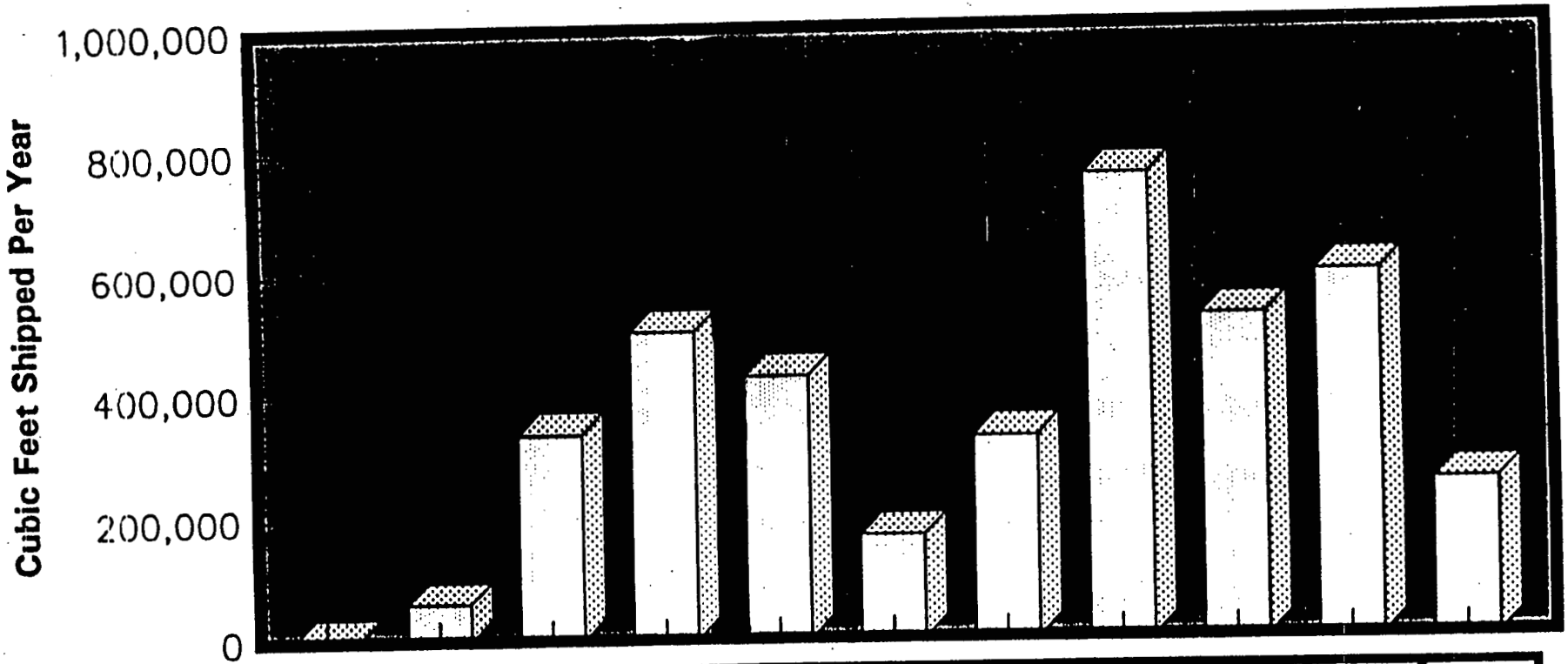

YEAR	1985	1986	1987	1988	1989	1990	1991	1992	1993	1994	1995
Cubic Feet	2,394	62,048	335,104	501,160	426,360	167,829	325,545	752,451	519,336	589,422	248,183*

* AS OF MARCH 3, 1995

000015

6989

LOW LEVEL WASTE SHIPPING PROGRAM

FEMP

PROGRAM HISTORY

Number of Shipments

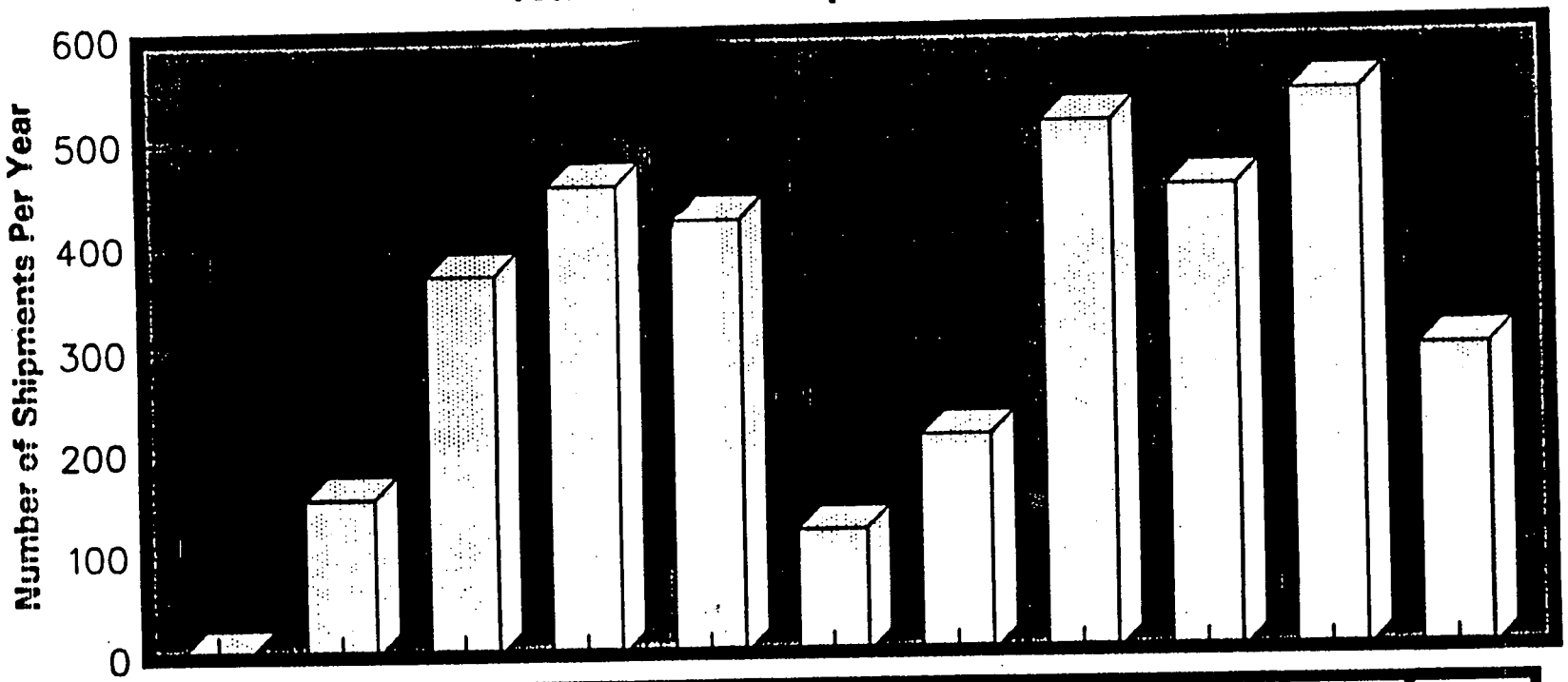

YEAR	1985	1986	1987	1988	1989	1990	1991	1992	1993	1994	1995
Shipments	4	154	369	454	421	120	211	511	448	538	293*

* AS OF MARCH 3, 1995

000016

PROGRAM HISTORY

Total Drum Equivalents (DEs)

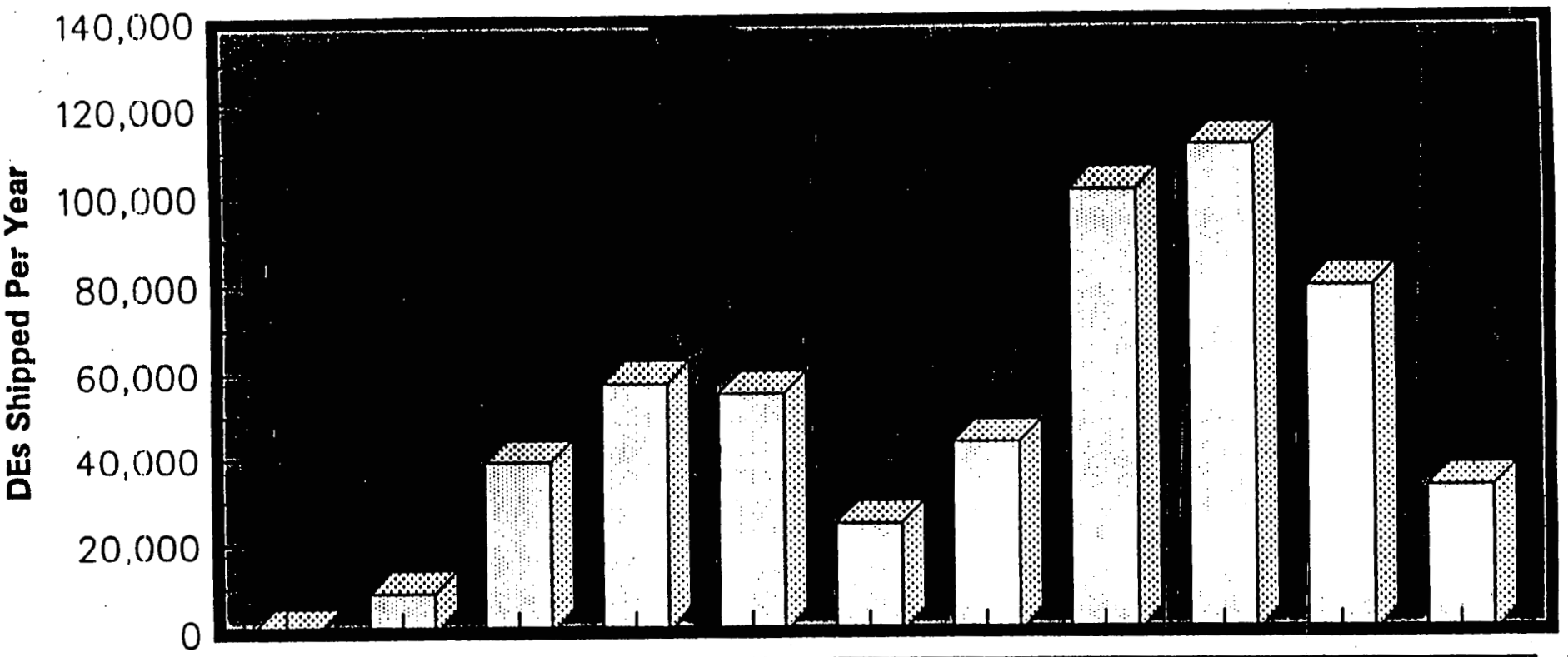

YEAR	1985	1986	1987	1988	1989	1990	1991	1992	1993	1994	1995
DEs	320	8,877	39,163	57,395	55,029	24,846	43,522	100,596	110,743	78,800	33,180*

* AS OF MARCH 3, 1995

FY95 WASTE SHIPPING SCHEDULE

		Process Area Scrap			Thorium			Residues To NTS			Contaminated Trash			Residues To SEG			Legacy Construction			Newly Generated Construction			Monthly Totals	
		DE's Proj.	DE's Actual	S/L	DE's Proj.	DE's Actual	WMB	Drum Proj.	DE's Actual	Actual Drum	DE's Proj.	DE's Actual	S/L	Drum Proj.	DE's Actual	Drum	DE's Proj.	DE's Actual	Cont.	DE's Proj.	DE's Actual	Cont.	DE's Proj.	DE's Actual
October	3-7	182.3	522.3	4.0	0.0	0.0	0.0	630.0	550.0	476.0	0.0	182.3	1.0	500.0	285.2	184.0	180.0	164.0	15.0	729.0	20.0	2.0	2221.3	1723.8
	10-14	182.3	182.3	1.0	0.0	182.3	0.0	630.0	360.0	321.0	0.0	0.0	0.0	500.0	874.2	564.0	180.0	32.2	3.0	729.0	40.0	4.0	2221.3	1671.0
	17-21	182.3	0.0	0.0	0.0	0.0	0.0	630.0	0.0	0.0	0.0	0.0	0.0	506.0	936.0	617.0	180.0	55.4	5.0	729.0	1041.1	8.0	2227.3	2032.5
	24-28	182.3	0.0	0.0	182.3	0.0	0.0	630.0	230.0	215.0	182.3	0.0	0.0	0.0	0.0	0.0	180.0	0.0	0.0	729.0	61.1	6.0	2085.9	291.1
	TOTAL	729.2	704.6	5.0	182.3	182.3	0.0	2520.0	1140.0	1012.0	182.3	182.3	1.0	1506.0	2095.4	1365.0	720.0	251.6	23.0	2916.0	1162.1	20.0	8755.8	5718.3
Year To Date Totals:		729.2	704.6	5.0	182.3	182.3	0.0	2520.0	1140.0	1012.0	182.3	182.3	1.0	1506.0	2095.4	1365.0	720.0	251.6	23.0	2916.0	1162.1	20.0	8755.8	5718.3
November	10/31-4	182.3	0.0	0.0	55.4	0.0	0.0	630.0	140.0	129.0	0.0	0.0	0.0	0.0	0.0	0.0	180.0	0.0	0.0	729.0	480.0	48.0	1776.7	620.0
	7-11	182.3	0.0	0.0	55.4	0.0	0.0	630.0	357.6	322.0	0.0	0.0	0.0	0.0	0.0	0.0	180.0	0.0	0.0	729.0	71.1	7.0	1776.7	428.6
	14-18	182.3	0.0	0.0	55.4	0.0	0.0	630.0	240.0	221.0	182.3	0.0	0.0	0.0	0.0	0.0	180.0	133.0	12.0	729.0	111.1	11.0	1959.0	484.0
	21-25	182.3	0.0	0.0	55.4	0.0	0.0	630.0	220.0	200.0	0.0	0.0	0.0	0.0	0.0	0.0	180.0	0.0	0.0	729.0	0.0	0.0	1776.7	220.0
	28-12/2	0.0	0.0	0.0	55.4	0.0	0.0	630.0	80.0	72.0	0.0	0.0	0.0	0.0	0.0	0.0	180.0	0.0	0.0	729.0	200.0	20.0	1594.4	280.0
	TOTAL	729.2	0.0	0.0	277.0	0.0	0.0	3150.0	1037.6	944.0	182.3	0.0	0.0	0.0	0.0	0.0	900.0	133.0	12.0	3645.0	862.1	86.0	8883.5	2032.7
Year To Date Totals:		1458.4	704.6	5.0	459.3	182.3	0.0	5670.0	2177.6	1956.0	364.6	182.3	1.0	1506.0	2095.4	1365.0	1620.0	384.6	35.0	6561.0	2024.3	106.0	17639.3	7751.0
December	5-9	182.3	1062.3	9.0	55.4	0.0	0.0	630.0	595.4	588.0	0.0	0.0	0.0	0.0	0.0	0.0	180.0	99.7	9.0	729.0	1118.8	14.0	1776.7	2876.2
	12-16	0.0	0.0	0.0	0.0	0.0	0.0	0.0	0.0	0.0	0.0	0.0	0.0	0.0	0.0	0.0	0.0	0.0	0.0	0.0	0.0	0.0	0.0	0.0
	19-23	0.0	0.0	0.0	0.0	0.0	0.0	0.0	0.0	0.0	0.0	0.0	0.0	0.0	0.0	0.0	0.0	0.0	0.0	0.0	0.0	0.0	0.0	0.0
	26-30	0.0	569.1	5.0	55.4	203.5	18.0	630.0	952.2	1085.0	0.0	0.0	0.0	0.0	0.0	0.0	180.0	398.9	36.0	364.6	1107.7	29.0	1230.0	3231.3
	TOTAL	182.3	1631.4	14.0	110.8	203.5	18.0	1260.0	1547.6	1673.0	0.0	0.0	0.0	0.0	0.0	0.0	360.0	498.6	45.0	1093.6	2226.5	43.0	3006.7	6107.5
Year To Date Totals:		1640.7	2336.0	19.0	570.1	385.8	18.0	6930.0	3725.1	3629.0	364.6	182.3	1.0	1506.0	2095.4	1365.0	1980.0	883.2	80.0	7654.6	4250.8	149.0	20646.0	13858.5
January	2-6	182.3	546.9	3.0	50.0	0.0	0.0	630.0	0.0	0.0	0.0	182.3	1.0	0.0	0.0	0.0	180.0	337.4	15.0	0.0	161.1	16.0	1042.3	1227.7
	9-13	182.3	182.3	1.0	50.0	323.4	13.0	630.0	0.0	0.0	0.0	182.3	1.0	0.0	0.0	0.0	180.0	508.6	10.0	0.0	91.1	9.0	1042.3	1287.7
	16-20	182.3	352.3	2.0	50.0	66.5	6.0	630.0	0.0	0.0	0.0	182.3	1.0	0.0	0.0	0.0	180.0	77.6	13.0	0.0	682.3	19.0	1042.3	1360.9
	23-27	182.3	352.3	2.0	50.0	0.0	0.0	630.0	0.0	0.0	182.3	0.0	0.0	0.0	0.0	0.0	180.0	0.0	0.0	0.0	170.0	1.0	1224.6	522.3
	30-2/3	182.3	850.0	5.0	50.0	0.0	0.0	630.0	460.0	472.0	0.0	0.0	0.0	0.0	0.0	0.0	180.0	265.9	24.0	0.0	170.0	1.0	1042.3	1745.9
	TOTAL	911.5	2283.8	13.0	250.0	389.9	19.0	3150.0	460.0	472.0	182.3	546.9	3.0	0.0	0.0	0.0	900.0	1189.5	62.0	0.0	1274.5	46.0	5393.8	6144.6
Year To Date Totals:		2552.2	4619.8	32.0	820.1	775.7	37.0	10080.0	4185.1	4101.0	546.9	729.2	4.0	1506.0	2095.4	1365.0	2880.0	2072.7	142.0	7654.6	5525.2	195.0	26039.8	20003.1
February	6-10	182.3	532.2	5.0	50.0	0.0	0.0	630.0	310.0	331.0	0.0	0.0	0.0	0.0	0.0	0.0	180.0	188.4	22.0	0.0	2740.0	22.0	1042.3	3770.6
	13-17	182.3	746.9	5.0	50.0	0.0	0.0	630.0	400.0	460.0	0.0	182.3	1.0	0.0	0.0	0.0	180.0	277.1	20.0	0.0	4624.3	43.0	1042.3	6230.6
	20-24	182.3	556.9	4.0	50.0	0.0	0.0	630.0	542.2	565.0	0.0	0.0	0.0	0.0	0.0	0.0	180.0	219.4	20.0	0.0	113.2	11.0	1042.3	1431.7
	27-3/3	182.3	716.9	4.0	50.0	0.0	0.0	630.0	350.0	404.0	182.3	182.3	1.0	0.0	0.0	0.0	180.0	464.3	11.0	0.0	30.0	3.0	1224.6	1743.5
	TOTAL	729.2	2552.9	18.0	200.0	0.0	0.0	2520.0	1602.2	1760.0	182.3	364.6	2.0	0.0	0.0	0.0	720.0	1149.2	73.0	0.0	7507.6	79.0	4351.5	13176.4
Year To Date Totals:		3281.4	7172.7	50.0	1020.1	775.7	37.0	12600.0	5787.3	5861.0	729.2	1093.8	6.0	1506.0	2095.4	1365.0	3600.0	3221.9	215.0	7654.6	13032.8	274.0	30391.3	33179.5
March	6-10	182.3	911.5	5.0	50.0	0.0	0.0	630.0	463.2	618.0	0.0	0.0	0.0	0.0	0.0	0.0	180.0	66.5	6.0	364.6	0.0	0.0	1406.9	1441.2
	13-17	182.3	746.9	7.0	50.0	0.0	0.0	630.0	781.1	950.0	0.0	0.0	0.0	0.0	0.0	0.0	180.0	99.7	9.0	364.6	70.0	7.0	1406.9	1697.7
	20-24	182.3	1183.8	15.0	50.0	0.0	0.0	630.0	609.7	690.0	0.0	182.3	1.0	0.0	0.0	0.0	180.0	453.2	10.0	364.6	10.0	1.0	1406.9	2439.1
	27-31	182.3			50.0			630.0			182.3			0.0			180.0			364.6			1589.2	0.0
	TOTAL	729.2	2842.2	27.0	200.0	0.0	0.0	2520.0	1854.0	2258.0	182.3	182.3	1.0	0.0	0.0	0.0	720.0	619.4	25.0	1458.4	80.0	8.0	5809.9	5578.0
Year To Date Totals:		4010.6	10014.9	77.0	1220.1	775.7	37.0	15120.0	7641.3	8119.0	911.5	1276.1	7.0	1506.0	2095.4	1365.0	4320.0	3841.3	240.0	9113.0	13112.8	282.0	36201.2	38757.5

000018

FY95 WASTE SHIPPING SCHEDULE

		Process Area Scrap			Thorium			Residues To NTS			Contaminated Trash			Residues To SEG			Legacy Construction			Newly Generated Construction			Monthly Totals	
		DE's Proj.	DE's Actual	S/L	DE's Proj.	DE's Actual	WMB	Drum Proj.	DE's Actual	Actual Drum	DE's Proj.	DE's Actual	S/L	Drum Proj.	DE's Actual	Drum	DE's Proj.	DE's Actual	Cont.	DE's Proj.	DE's Actual	Cont.	DE's Proj.	DE's Actual
April	3-7	182.3	406.8	7.0	0.0	0.0	0.0	630.0	310.0	324.0	182.3	182.3	1.0	0.0	0.0	0.0	180.0	773.5	8.0	364.6	772.3	28.0	1539.2	2444.9
	10-14	182.3	1313.7	13.0	0.0	0.0	0.0	630.0	130.0	127.0	0.0	0.0	0.0	0.0	0.0	0.0	180.0	66.5	6.0	364.6	342.3	16.0	1356.9	1852.4
	17-21	182.3			0.0			630.0			0.0			0.0			180.0			364.6			1356.9	0.0
	24-28	182.3			50.0			630.0			0.0			0.0			180.0			364.6			1406.9	0.0
	TOTAL	729.2	1720.5	20.0	50.0	0.0	0.0	2520.0	440.0	451.0	182.3	182.3	1.0	0.0	0.0	0.0	720.0	840.0	14.0	1458.4	1114.6	44.0	5659.9	4297.3
Year To Date Totals:		4739.8	12163.1	105.0	1270.1	775.7	37.0	17640.0	8732.4	9363.0	1093.8	1640.7	9.0	1506.0	2095.4	1365.0	5040.0	4974.4	265.0	10571.4	14357.4	339.0	41861.1	44739.1
May	1-5	182.3			150.0			630.0			0.0			0.0			180.0			364.6			1506.9	0.0
	8-12	182.3			150.0			630.0			182.3			0.0			180.0			364.6			1689.2	0.0
	15-19	182.3			150.0			630.0			0.0			0.0			180.0			364.6			1506.9	0.0
	22-26	182.3			150.0			630.0			0.0			0.0			180.0			364.6			1506.9	0.0
	29-6/2	182.3			150.0			630.0			0.0			0.0			180.0			364.6			1506.9	0.0
	TOTAL	911.5			750.0			3150.0			182.3			0.0			900.0			1823.0			7716.8	0.0
Year To Date Totals:		5651.3			2020.1			20790.0			1276.1			1506.0			5940.0			12394.4			49577.9	44739.1
June	5-9	182.3			150.0			630.0			0.0			0.0			180.0			540.9			1683.2	0.0
	12-16	182.3			150.0			630.0			182.3			0.0			180.0			540.9			1865.5	0.0
	19-23	182.3			150.0			630.0			0.0			0.0			180.0			540.9			1683.2	0.0
	26-30	182.3			150.0			630.0			0.0			0.0			180.0			540.9			1683.2	0.0
	TOTAL	729.2			600.0			2520.0			182.3			0.0			720.0			2163.6			6915.1	0.0
Year To Date Totals:		6380.5			2620.1			23310.0			1458.4			1506.0			6660.0			14558.0			56493.0	44739.1
July	3-7	182.3			150.0			630.0			0.0			0.0			180.0			540.9			1683.2	0.0
	10-14	182.3			150.0			630.0			0.0			0.0			180.0			540.9			1683.2	0.0
	17-21	182.3			150.0			200.0			0.0			0.0			180.0			540.9			1253.2	0.0
	24-28	182.3			150.0			200.0			0.0			0.0			180.0			540.9			1253.2	0.0
	TOTAL	729.2			600.0			1660.0			0.0			0.0			720.0			2163.6			5872.8	0.0
Year To Date Totals:		7109.7			3220.1			24970.0			1458.4			1506.0			7380.0			16721.6			62365.8	44739.1
August	7/31-4	182.3			150.0			200.0			0.0			0.0			180.0			540.9			1253.2	0.0
	7-11	0.0			150.0			200.0			0.0			0.0			180.0			540.9			1070.9	0.0
	14-18	182.3			150.0			200.0			182.3			0.0			180.0			540.9			1435.5	0.0
	21-25	0.0			150.0			200.0			0.0			0.0			180.0			540.9			1070.9	0.0
	28-9/1	182.3			150.0			200.0			0.0			0.0			180.0			540.9			1253.2	0.0
	TOTAL	546.9			750.0			1000.0			182.3			0.0			900.0			2704.5			6083.7	0.0
Year To Date Totals:		7656.6			3970.1			25970.0			1640.7			1506.0			8280.0			19426.1			68449.5	44739.1
September	4-8	182.3			150.0			200.0			0.0			0.0			180.0			540.9			1253.2	0.0
	11-15	0.0			150.0			200.0			0.0			0.0			180.0			540.9			1070.9	0.0
	18-22	182.3			150.0			200.0			182.3			0.0			180.0			540.9			1435.5	0.0
	25-29	0.0			80.0			0.0			0.0			0.0			0.0			0.0			80.0	0.0
	TOTAL	364.6			530.0			600.0			182.3			0.0			540.0			1622.7			3839.6	0.0
Year To Date Totals:		8021.2			4500.1			26570.0			1823.0			1506.0			8820.0			21048.8			72289.1	44739.1

000019

6989

THREE – YEAR WASTE SHIPMENT FORECAST

GENERATOR: Fernald Env. Mgt. Proj. PREPARED J. Rowe DATE: 03/17/95

FORECAST PERIOD	WASTE STREAM NUMBER	WASTE TYPE	CONTAINER			NUMBER OF SHIPMENTS	TOTAL VOLUME (cubic feet)	TOTAL VOLUME (cubic meters)
			CODE	SIZE	NUMBER			
FY–1995 ACTUALS 10/1 – 03/03	ONLO000000001	LLW	109	8.5 x 7.92 x 19.83 (ext.) 7.75 x 7.83 x 19.33 (int.)	23	20	30705 26979	859.74 755.412
			121	7.83 x 8 x 20 (ext.) 7.33 x 7.66 x 19.67 (int.)	18	18	22554 19872	631.512 556.416
			119	3.38 x 4.77 x 6.77 (ext.) 2.67 x 4.33 x 6.25 (int.)	10	10	1090 720	30.52 20.16
FY–1995 03/06 – 03/31	ONLO000000001	LLW	109	8.5 x 7.92 x 19.83 (ext.) 7.75 x 7.83 x 19.33 (int.)	20	20	26700 23460	747.6 656.88
04/01 – 06/30	ONLO000000001	LLW	109	8.5 x 7.92 x 19.83 (ext.) 7.75 x 7.83 x 19.33 (int.)	11	8	14685 12903	411.18 361.284
07/01 – 09/30	ONLO000000001	LLW	109	8.5 x 7.92 x 19.83 (ext.) 7.75 x 7.83 x 19.33 (int.)	11	8	14685 12903	411.18 361.284
FY'95 TOTAL	ONLO000000001			(ext.) (int.)	93	84	110419 96837	3091.732 2711.436
FY–1996	ONLO000000001	LLW	109	8.5 x 7.92 x 19.83 (ext.) 7.75 x 7.83 x 19.33 (int.)	24	18	32040 28152	897.12 788.256
FY–1997	ONLO000000001	LLW	109	8.5 x 7.92 x 19.83 (ext.) 7.75 x 7.83 x 19.33 (int.)	20	17	26700 23460	747.6 656.88

REMARKS: FY–95 TOTAL includes Actual Volumes shipped through 3/03/95 + Forecasted Volumes for period of March 6 through September 30 ,1995

000020

000020

THREE – YEAR WASTE SHIPMENT FORECAST

GENERATOR: Fernald Env. Mgt. Proj. PREPARED J. Rowe DATE: 03/17/95

FORECAST PERIOD	WASTE STREAM NUMBER	WASTE TYPE	CONTAINER			NUMBER OF SHIPMENTS	TOTAL VOLUME (cubic feet)	TOTAL VOLUME (cubic meters)
			CODE	SIZE	NUMBER			
FY–1995 ACTUALS 10/1 – 03/03	ONLO000000002	LLW	109	8.5 x 7.92 x 19.83 (ext.) 7.75 x 7.83 x 19.33 (int.)	9	9	12015 10557	336.42 295.596
			121	7.83 x 8 x 20 (ext.) 7.33 x 7.66 x 19.67 (int.)	61	61	76433 67344	2140.124 1885.632
			119	3.38 x 4.77 x 6.77 (ext.) 2.67 x 4.33 x 6.25 (int.)	417	10	45453 30024	1272.684 840.672
FY–1995 03/06 – 03/31	ONLO000000002	LLW	109	8.5 x 7.92 x 19.83 (ext.) 7.75 x 7.83 x 19.33 (int.)	0	0	0 0	0 0
			119	3.38 x 4.77 x 6.77 (ext.) 2.67 x 4.33 x 6.25 (int.)	96	16	10464 6912	292.992 193.536
04/01 – 06/30	ONLO000000002	LLW	109	8.5 x 7.92 x 19.83 (ext.) 7.75 x 7.83 x 19.33 (int.)	32	32	42720 37536	1196.16 1051.008
			119	3.38 x 4.77 x 6.77 (ext.) 2.67 x 4.33 x 6.25 (int.)	150	24	16350 10800	457.8 302.4
07/01 – 09/30	ONLO000000002	LLW	109	8.5 x 7.92 x 19.83 (ext.) 7.75 x 7.83 x 19.33 (int.)	31	31	41385 36363	1158.78 1018.164
			119	3.38 x 4.77 x 6.77 (ext.) 2.67 x 4.33 x 6.25 (int.)	125	20	13625 9000	381.5 252
FY'95 TOTAL	ONLO000000002			(ext.) (int.)	921	203	258445 208536	7236.46 5839.008
FY–1996	ONLO000000002	LLW	109	8.5 x 7.92 x 19.83 (ext.) 7.75 x 7.83 x 19.33 (int.)	100	100	133500 117300	3738 3284.4
			119	3.38 x 4.77 x 6.77 (ext.) 2.67 x 4.33 x 6.25 (int.)	1000	160	109000 72000	3052 2016
FY–1997	ONLO000000002	LLW	109	8.5 x 7.92 x 19.83 (ext.) 7.75 x 7.83 x 19.33 (int.)	100	100	133500 117300	3738 3284.4
			119	3.38 x 4.77 x 6.77 (ext.) 2.67 x 4.33 x 6.25 (int.)	1000	160	109000 72000	3052 2016

REMARKS: FY–95 TOTAL includes Actual Volumes shipped through 3/03/95 + Forecasted Volumes for period of March 6 through September 30 ,1995

000021

6869

THREE – YEAR WASTE SHIPMENT FORECAST

GENERATOR: Fernald Env. Mgt. Proj. PREPARED J. Rowe DATE: 03/17/95

FORECAST PERIOD	WASTE STREAM NUMBER	WASTE TYPE	CONTAINER CODE	CONTAINER SIZE	CONTAINER NUMBER	NUMBER OF SHIPMENTS	TOTAL VOLUME (cubic feet)	TOTAL VOLUME (cubic meters)
FY–1995 ACTUALS 10/1 – 03/03	ONLO000000006	LLW	119	3.38 x 4.77 x 6.77 (ext.) 2.67 x 4.33 x 6.25 (int.)	570	85	62130 41040	1739.64 1149.12
FY–1995 03/06 – 03/31	ONLO000000006	LLW	124	85–Gallon (ext.) 55–gallon (int.)	0	0	0 0	0 0
			119	3.38 x 4.77 x 6.77 (ext.) 2.67 x 4.33 x 6.25 (int.)	280	40	30520 20160	854.56 564.48
FY–1995 04/01 – 03/31	ONLO000000006	LLW	124	85–Gallon (ext.) 55–gallon (int.)	100	2	1413 750	39.564 21
			119	3.38 x 4.77 x 6.77 (ext.) 2.67 x 4.33 x 6.25 (int.)	505	72	55045 36360	1541.26 1018.08
07/01 – 09/30	ONLO000000006	LLW	124	85–Gallon (ext.) 55–gallon (int.)	100	2	1413 750	39.564 21
			119	3.38 x 4.77 x 6.77 (ext.) 2.67 x 4.33 x 6.25 (int.)	505	72	55045 36360	1541.26 1018.08
FY'95 TOTAL	ONLO000000006			(ext.) (int.)	2060	273	205566 135420	6537.72 9217.488
FY–1996	ONLO000000006	LLW	124	85–Gallon (ext.) 55–gallon (int.)	1500	75	21195 11250	593.46 315
			119	3.38 x 4.77 x 6.77 (ext.) 2.67 x 4.33 x 6.25 (int.)	1400	210	152600 15120	4272.8 423.36
FY–1997	ONLO000000006	LLW	124	85–Gallon (ext.) 55–gallon (int.)	500	25	7065 3750	197.82 105
			119	3.38 x 4.77 x 6.77 (ext.) 2.67 x 4.33 x 6.25 (int.)	1000	210	109000 15120	3052 423.36

REMARKS: FY–95 TOTAL includes Actual Volumes shipped through 3/03/95 + Forecasted Volumes for period of March 6 through September 30 ,1995

000022

0888

THREE – YEAR WASTE SHIPMENT FORECAST

GENERATOR: Fernald Env. Mgt. Proj. PREPARED J. Rowe DATE: 03/17/95

FORECAST PERIOD	WASTE STREAM NUMBER	WASTE TYPE	CONTAINER			NUMBER OF SHIPMENTS	TOTAL VOLUME (cubic feet)	TOTAL VOLUME (cubic meters)
			CODE	SIZE	NUMBER			
FY–1995 ACTUALS 10/1 – 03/03	ONLO000000007	LLW	109	8.5 x 7.92 x 19.83 (ext.) 7.75 x 7.83 x 19.33 (int.)	6	6	8010 7038	224.28 197.064
			119	3.38 x 4.77 x 6.77 (ext.) 2.67 x 4.33 x 6.25 (int.)	0	0	0 0	0 0
FY–1995 03/06 – 03/31	ONLO000000007	LLW	109	8.5 x 7.92 x 19.83 (ext.) 7.75 x 7.83 x 19.33 (int.)	1	1	1335 1173	37.38 32.844
04/01 – 06/30	ONLO000000007	LLW	109	8.5 x 7.92 x 19.83 (ext.) 7.75 x 7.83 x 19.33 (int.)	2	2	2670 2346	74.76 65.688
07/01 – 09/30	ONLO000000007	LLW	109	8.5 x 7.92 x 19.83 (ext.) 7.75 x 7.83 x 19.33 (int.)	3	3	4005 3519	112.14 98.532
FY'95 TOTAL	ONLO000000007			(ext.) (int.)	12	12	16020 14076	421.344 805.308
FY–1996	ONLO000000007	LLW	109	8.5 x 7.92 x 19.83 (ext.) 7.75 x 7.83 x 19.33 (int.)	3	3	4005 3519	112.14 98.532
			119	3.38 x 4.77 x 6.77 (ext.) 2.67 x 4.33 x 6.25 (int.)	54	6	5886 3888	164.808 108.864
FY–1997	ONLO000000007	LLW	109	8.5 x 7.92 x 19.83 (ext.) 7.75 x 7.83 x 19.33 (int.)	3	3	4005 3519	112.14 98.532
			119	3.38 x 4.77 x 6.77 (ext.) 2.67 x 4.33 x 6.25 (int.)	50	6	5450 3600	152.6 100.8

REMARKS: FY–95 TOTAL includes Actual Volumes shipped through 3/03/95 + Forecasted Volumes for period of March 6 through September 30 ,1995

THREE – YEAR WASTE SHIPMENT FORECAST

GENERATOR: Fernald Env. Mgt. Proj. PREPARED J. Rowe DATE: 03/17/95

FORECAST PERIOD	WASTE STREAM NUMBER	WASTE TYPE	CONTAINER CODE	CONTAINER SIZE	CONTAINER NUMBER	NUMBER OF SHIPMENTS	TOTAL VOLUME (cubic feet)	TOTAL VOLUME (cubic meters)
FY–1995 ACTUALS 10/1–03/03	ONLO000000008	LLW	124	85–Gallon (ext.) 55–gallon (int.)	1862	51	26310.06 13965	736.68168 391.02
			119	3.38 x 4.77 x 6.77 (ext.) 2.67 x 4.33 x 6.25 (int.)	0	0	0 0	0 0
FY–1995 03/06 – 03/31	ONLO000000008	LLW	124	85–Gallon (ext.) 55–gallon (int.)	5	1	70.65 37.5	1.9782 1.05
			119	3.38 x 4.77 x 6.77 (ext.) 2.67 x 4.33 x 6.25 (int.)	0	0	0 0	0 0
04/01 – 06/30	ONLO000000008	LLW	124	85–Gallon (ext.) 55–gallon (int.)	0	0	0 0	0 0
			119	3.38 x 4.77 x 6.77 (ext.) 2.67 x 4.33 x 6.25 (int.)	0	0	0 0	0 0
07/01 – 09/30	ONLO000000008	LLW	124	85–Gallon (ext.) 55–gallon (int.)	0	0	0 0	0 0
			119	3.38 x 4.77 x 6.77 (ext.) 2.67 x 4.33 x 6.25 (int.)	0	0	0 0	0 0
FY'95 TOTAL	ONLO000000008			(ext.) (int.)	1867	52	26380.71 14002.5	738.65988 392.07
FY–1996	ONLO000000008	LLW	124	85–Gallon (ext.) 55–gallon (int.)	0	0	0 0	0 0
			119	3.38 x 4.77 x 6.77 (ext.) 2.67 x 4.33 x 6.25 (int.)	0	0	0 0	0 0
FY–1997	ONLO000000008	LLW	124	85–Gallon (ext.) 55–gallon (int.)	0	0	0 0	0 0
			119	3.38 x 4.77 x 6.77 (ext.) 2.67 x 4.33 x 6.25 (int.)	0	0	0 0	0 0

REMARKS: FY–95 TOTAL includes Actual Volumes shipped through 3/03/95 + Forecasted Volumes for period of March 6 through September 30 ,1995

THREE – YEAR WASTE SHIPMENT FORECAST

GENERATOR: Fernald Env. Mgt. Proj. PREPARED J. Rowe DATE: 03/17/95

FORECAST PERIOD	WASTE STREAM NUMBER	WASTE TYPE	CONTAINER			NUMBER OF SHIPMENTS	TOTAL VOLUME (cubic feet)	TOTAL VOLUME (cubic meters)
			CODE	SIZE	NUMBER			
FY–1995 ACTUALS 10/1 – 03/03	ONLO000000009	LLW	119	3.38 x 4.77 x 6.77 (ext.) 2.67 x 4.33 x 6.25 (int.)	0	0	0 0	0 0
FY–1995 03/06 – 03/31	ONLO000000009	LLW	119	3.38 x 4.77 x 6.77 (ext.) 2.67 x 4.33 x 6.25 (int.)	0	0	0 0	0 0
04/01 – 06/30	ONLO000000009	LLW	119	3.38 x 4.77 x 6.77 (ext.) 2.67 x 4.33 x 6.25 (int.)	10	2	1090 720	30.52 20.16
07/01 – 09/30	ONLO000000009	LLW	119	3.38 x 4.77 x 6.77 (ext.) 2.67 x 4.33 x 6.25 (int.)	10	2	1090 720	30.52 20.16
FY'95 TOTAL	ONLO000000009			(ext.) (int.)	20	4	2180 1440	61.04 162.4
FY–1996	ONLO000000009	LLW	119	3.38 x 4.77 x 6.77 (ext.) 2.67 x 4.33 x 6.25 (int.)	0	0	0 0	0 0
FY–1997	ONLO000000009	LLW	119	3.38 x 4.77 x 6.77 (ext.) 2.67 x 4.33 x 6.25 (int.)	0	0	0 0	0 0

REMARKS: FY–95 TOTAL includes Actual Volumes shipped through 3/03/95 + Forecasted Volumes for period of March 6 through September 30 ,1995

000025

6989

THREE – YEAR WASTE SHIPMENT FORECAST

GENERATOR: Fernald Env. Mgt. Proj. PREPARED J. Rowe DATE: 03/17/95

FORECAST PERIOD	WASTE STREAM NUMBER	WASTE TYPE	CONTAINER CODE	CONTAINER SIZE	CONTAINER NUMBER	NUMBER OF SHIPMENTS	TOTAL VOLUME (cubic feet)	TOTAL VOLUME (cubic meters)
FY–1995 ACTUALS 10/1 – 03/03	ONLO00000011	LLW	109	8.5 x 7.92 x 19.83 (ext.)	0	0	0	0
				7.75 x 7.83 x 19.33 (int.)			0	0
			119	3.38 x 4.77 x 6.77 (ext.)	0	0	0	0
				2.67 x 4.33 x 6.25 (int.)			0	0
FY–1995 03/06–03/31	ONLO00000011	LLW	109	8.5 x 7.92 x 19.83 (ext.)	0	0	0	0
				7.75 x 7.83 x 19.33 (int.)			0	0
			119	3.38 x 4.77 x 6.77 (ext.)	0	0	0	0
				2.67 x 4.33 x 6.25 (int.)			0	0
FY–1995 04/01–06/30	ONLO00000011	LLW	109	8.5 x 7.92 x 19.83 (ext.)	0	0	0	0
				7.75 x 7.83 x 19.33 (int.)			0	0
			119	3.38 x 4.77 x 6.77 (ext.)	0	0	0	0
				2.67 x 4.33 x 6.25 (int.)			0	0
FY–1995 07/01–09/30	ONLO00000011	LLW	109	8.5 x 7.92 x 19.83 (ext.)	1	1	1335	37.38
				7.75 x 7.83 x 19.33 (int.)			1173	32.844
			119	3.38 x 4.77 x 6.77 (ext.)	50	10	5450	152.6
				2.67 x 4.33 x 6.25 (int.)			3600	100.8
FY'95 TOTAL	ONLO000000011			(ext.)	51	11	6785	189.98
				(int.)			4773	133.644
FY–1996	ONLO00000011	LLW	109	8.5 x 7.92 x 19.83 (ext.)	4	4	5340	149.52
				7.75 x 7.83 x 19.33 (int.)			4692	131.376
			119	3.38 x 4.77 x 6.77 (ext.)	100	20	10900	305.2
				2.67 x 4.33 x 6.25 (int.)			7200	201.6
FY–1997	ONLO00000011	LLW	109	8.5 x 7.92 x 19.83 (ext.)	4	4	5340	149.52
				7.75 x 7.83 x 19.33 (int.)			4692	131.376
			119	3.38 x 4.77 x 6.77 (ext.)	0	0	0	0
				2.67 x 4.33 x 6.25 (int.)			0	0

REMARKS: FY–95 TOTAL includes Actual Volumes shipped through 3/03/95 + Forecasted Volumes for period of March 6 through September 30 ,1995

000026

9883

THREE – YEAR WASTE SHIPMENT FORECAST

GENERATOR: Fernald Env. Mgt. Proj. PREPARED J. Rowe DATE: 03/17/95

FORECAST PERIOD	WASTE STREAM NUMBER	WASTE TYPE	CONTAINER			NUMBER OF SHIPMENTS	TOTAL VOLUME (cubic feet)	TOTAL VOLUME (cubic meters)
			CODE	SIZE	NUMBER			
FY–1995 ACTUALS 10/1 – 03/03	ONLO000000012	LLW	119	3.38 x 4.77 x 6.77 (ext.) 2.67 x 4.33 x 6.25 (int.)	0	0	0 0	0 0
FY–1995 03/06 – 03/31	ONLO000000012	LLW	119	3.38 x 4.77 x 6.77 (ext.) 2.67 x 4.33 x 6.25 (int.)	0	0	0 0	0 0
04/01 – 06/30	ONLO000000012	LLW	119	3.38 x 4.77 x 6.77 (ext.) 2.67 x 4.33 x 6.25 (int.)	50	10	5450 3600	152.6 100.8
07/01 – 09/30	ONLO000000012	LLW	119	3.38 x 4.77 x 6.77 (ext.) 2.67 x 4.33 x 6.25 (int.)	250	50	27250 18000	763 504
FY'95 TOTAL	ONLO000000012			(ext.) (int.)	300	60	32700 21600	915.6 2436
FY–1996	ONLO000000012	LLW	119	3.38 x 4.77 x 6.77 (ext.) 2.67 x 4.33 x 6.25 (int.)	750	150	81750 54000	2289 1512
FY–1997	ONLO000000012	LLW	119	3.38 x 4.77 x 6.77 (ext.) 2.67 x 4.33 x 6.25 (int.)	750	150	81750 54000	2289 1512

REMARKS: FY–95 TOTAL includes Actual Volumes shipped through 3/03/95 + Forecasted Volumes for period of March 6 through September 30 ,1995

000027

6989

THREE – YEAR WASTE SHIPMENT FORECAST

GENERATOR: Fernald Env. Mgt. Proj. PREPARED J. Rowe DATE: 03/17/95

FORECAST PERIOD	WASTE STREAM NUMBER	WASTE TYPE	CONTAINER CODE	CONTAINER SIZE	CONTAINER NUMBER	NUMBER OF SHIPMENTS	TOTAL VOLUME (cubic feet)	TOTAL VOLUME (cubic meters)
FY–1995 ACTUALS 10/1 – 03/03	SUMMARY	LLW	ALL	(ext.) (int.)	2976	270	284700.1 217539	7971.60168 6091.092
FY–1995 03/06 – 03/31	SUMMARY	LLW	ALL	(ext.) (int.)	402	78	69089.65 51742.5	1934.5102 1448.79
04/01 – 06/30	SUMMARY	LLW	ALL	(ext.) (int.)	860	152	139423 105015	3903.844 2940.42
07/01 – 09/30	SUMMARY	LLW	ALL	(ext.) (int.)	1086	199	165283 122388	4627.924 3426.864
FY'95 TOTAL	SUMMARY	LLW	ALL	(ext.) (int.)	5324	699	658495.7 496684.5	18437.87988 13907.166
FY–1996	SUMMARY	LLW	ALL	(ext.) (int.)	4935	746	556216 317121	15574.048 8879.388
FY–1997	SUMMARY	LLW	ALL	(ext.) (int.)	3427	675	481810 297441	13490.68 8328.348

REMARKS: FY–1995 volumes shipped through 3/03/95 are
FY–95 TOTAL includes Actual Volumes shipped through 3/03/95 + Forecasted Volumes
for period of March 6 through September 30 ,1995

000028

000028

6989

B.

Control No. [redacted]
SITE PROCEDURE MS-08-1001
REVISION NO. 0 6989

NON-CONTROLLED COPY

FERMCO SITE PROCEDURE SYSTEM

Effective Date: 02/01/95

Originator (Subject Expert): Vernon B. Taylor Jr. 1/23/95
Date

Checker Concurrence: Michael K. Yates 1/24/95
Date

APPROVED BY: Michael K. Yates 1/24/95
Mike Yates, Office of the President Date

FERNALD ENVIRONMENTAL MANAGEMENT PROJECT

Fernald Environmental Restoration Management Corporation
P. O. Box 538704
Cincinnati, Ohio 45253-8704

TABLE OF CONTENTS

SECTION	TITLE	PAGE
1.0	PURPOSE	3
2.0	SCOPE	3
3.0	REFERENCES	3
4.0	RESPONSIBILITIES	4
5.0	GENERAL	4
6.0	PREREQUISITES	5
7.0	PROCEDURE	6
7.1	IDENTIFYING REQUIRED SITE PROCEDURES FOR A FUNCTIONAL AREA	6
7.2	NOTIFYING ORGANIZATIONAL MANAGEMENT OF NEED FOR A NEW SITE PROCEDURE, CHANGE, OR CANCELLATION	6
7.3	DEVELOPING A NEW SITE PROCEDURE OR REVISION	7
7.4	REVIEWING A NEW SITE PROCEDURE OR REVISION	8
7.5	RESOLVING COMMENTS FOR A NEW SITE PROCEDURE OR REVISION	10
7.6	APPROVING A NEW SITE PROCEDURE OR REVISION	11
7.7	AUTHORIZING A NEW SITE PROCEDURE OR REVISION	11
7.8	DISTRIBUTING A NEW SITE PROCEDURE OR REVISION	12
7.9	IMPLEMENTING A NEW SITE PROCEDURE OR REVISION	13
7.10	PREPARING AND ISSUING AN INTERIM CHANGE TO A PROCEDURE (ICP)	13
7.11	CANCELLING A SITE PROCEDURE/ICP	15
7.12	MANAGING DIVISIONAL PROCEDURES	16
8.0	DRIVERS	17
9.0	DEFINITIONS	17

LIST OF TABLES

TABLE 1 - FEMP FUNCTIONAL AREAS 21

LIST OF ATTACHMENTS

ATTACHMENT A - FERMCO SITE PROCEDURE SYSTEM FLOW CHART 22
ATTACHMENT B - NUMBERING SYSTEM FOR SITE PROCEDURAL SYSTEM 23
ATTACHMENT C - SITE PROCEDURE FORMAT AND GUIDELINES 24
ATTACHMENT D - EXAMPLE OF ROUTING MEMO 26
ATTACHMENT E - SITE PROCEDURE REVIEW COMMENT SHEET 27
ATTACHMENT F - INTERIM CHANGE TO A SITE PROCEDURE (ICP) 28
ATTACHMENT G - FERMCO SITE PROCEDURE SYSTEM IMPLEMENTATION REQUIREMENTS . 31

ISSUE AND REVISION SUMMARY

Revision	Date	Description of Issue or Revision
0	02/01/95	New procedure requested by M. Yates for the establishment, revision, and control of FERMCO site procedures. Supersedes SSOP-0103.

1.0 PURPOSE

1.1 This site procedure provides instructions for identifying, developing, reviewing, approving, revising, cancelling, authorizing, and distributing site procedures used by the Fernald Environmental Restoration Management Corporation (FERMCO) for Fernald Environmental Management Project (FEMP) activities. This procedure also provides guidance for establishing, revising, implementing, and controlling divisional procedures. The FERMCO procedure system promotes consistency, continuity, and understanding throughout the functional areas. Procedures document established standards, responsibilities, steps, including references, and guidelines for conducting day-to-day operations.

NOTE: All existing FEMP documents (those currently defined as section, department, division, and site documents identified in the Site Document Index) that meet the scope of MS-1001 are considered site procedures. These procedures are to be identified and reclassified as site procedures in accordance with this procedure (see Attachment G) within one year from the effective date of MS-1001 or reassigned to the appropriate hierarchy of documents as defined in RM-0016, Management Plan - FERMCO Policies and Requirements Manual.

2.0 SCOPE

2.1 FERMCO managers ensure that site procedures are prepared and controlled according to the instructions of MS-1001. This procedure applies to all FERMCO personnel involved in establishing, revising, controlling, and implementing site and divisional procedures.

2.2 This procedure does not cover preparing and controlling other document categories (such as policies, site requirements, and charters). Policies and charters are issued by the FERMCO President in RM-0016, Management Plan - The FERMCO Policies and Requirements Manual.

3.0 REFERENCES

3.1 FERMCO RM-0012, Quality Assurance Program

3.2 FERMCO RM-0016, The Management Plan, FERMCO Policies and Requirements Manual

4.0 RESPONSIBILITIES

NOTE: Responsibility for steps in the procedures are assigned to key personnel. Key personnel may delegate those activities to individuals under their supervision. Therefore, it is not necessary to use the phrase "Or Designee" when writing procedures. The individual performing the activity is responsible for performing it as specified; however, the ultimate responsibility for assuring proper performance of activities remains with the identified key person.

4.1 Functional Area Manager (FAM) - Ensures the identification, development, authorization, implementation, and revision of site procedures to meet requirements of the assigned functional area(s).

4.2 Subject Expert (SE) - Prepares procedures in accordance with this procedure.

4.3 Checker - Verifies procedures in accordance with this procedure.

4.4 Central Procedure Control (CPC) - Provides services for support of the Site Procedural System in accordance with this procedure.

4.5 Procedure Coordinator - Coordinates procedural reviews in accordance with this procedure.

4.6 Site Procedure Custodian - Ensures divisional control of the Site Procedural System in accordance with this procedure.

4.7 Supervisor - Ensures affected site personnel are trained to new or revised procedures.

5.0 GENERAL

5.1 Site procedures are organized by functional areas (refer to Table 1: FEMP Functional Areas) as defined in RM-0016. The site procedure system centralizes the control of site procedures at the FEMP using one system and allows flexibility to each division for draft development and processing.

5.2 Functional area managers may request the support of a technical writer from the Forms and Procedures Development group or another organization.

5.3 All divisions are responsible for complying with the requirements of this procedure when managing site procedures. Changes completed outside the requirements of this procedure are not permitted. Changes defined in interoffice memos, employee updates, electronic mail, or any other method of communication will not be recognized or followed.

5.4 The numbering system for the Site Procedural System is defined in Attachment B: Numbering System for Site Procedural System. Procedure developers use this system to assign procedure numbers.

5.5 The required format with guidance for the preparation of site procedures is defined in Attachment C: Site Procedure Format and Guidelines.

5.6 Procedures may be revised at any time to reflect changes made necessary by changing policy, organization structure, regulatory requirements, or to improve the effectiveness/efficiency of the process.

5.7 All activities requiring FERMCO-developed forms shall be proceduralized. Procedures using forms must route forms through Forms and Procedures Development for development and control. Forms included in a procedure should be marked "SAMPLE" or "EXAMPLE." Print original copies from the electronic file. Contact Forms and Procedures Development for the source of the electronic file.

5.8 A form created by the procedure owner may not be changed by any secondary user of the procedure. Only the originator of the form can change the form. Coordinate form revisions with Forms and Procedures Development.

5.9 The FERMCO Site Procedural System consists of a volume of site procedures implementing the requirements of each functional area identified in RM-0016. Site procedures are required to implement the requirements cited in the Standards/Requirements Identification Document (S/RID), found in RM-0016, Management Plan - The FERMCO Policies and Requirements Manual, and in accordance with RM-0012, FERMCO Quality Assurance Program.

5.10 The FERMCO Site Procedure System flow process is shown in Attachment A: FERMCO Site Procedure System Flow Chart.

6.0 PREREQUISITES

NOTE: The roles of the Procedure Coordinator and the Site Procedure Custodian may be performed by one or more individuals in a division.

6.1 Division managers appoint an employee in their division to be the Procedure Coordinator to manage the review and approval routing process for any given site procedure -- whether generated by their division or by other divisions.

6.2 Division managers designate an employee in their division to be the Site Procedure Custodian to maintain the Functional Area Site Procedure Volume(s) or specific site procedure volumes within their area and complete a secondary distribution as needed.

NOTE: Specific divisions maintain Functional Area Site Procedure Volumes based on location and need as determined by the division manager.

6.3 Each division reports the name of the assigned procedure custodian to the Central Procedure Control (CPC).

7.0 PROCEDURE

7.1 IDENTIFYING REQUIRED SITE PROCEDURES FOR A FUNCTIONAL AREA

NOTE: The Forms and Procedures Development section of the Administration Division may be contacted for assistance in identifying needed procedures.

Functional Area Manager

7.1.1 Use the applicable section of the S/RID in RM-0016 to identify the requirements for the functional area; and use the requirements defined in RM-0012, FERMCO Quality Assurance Program, to identify quality assurance criteria.

7.1.2 Research codes, policies, procedures, regulatory requirements, and other applicable documents to gain full knowledge of technical, quality, and administrative requirements. Determine the effect of the proposed procedure or revision on existing procedures and/or other organizations.

7.1.3 Consult, review, and discuss with knowledgeable individuals and affected organizations to ensure that the procedures appropriately document how FERMCO will meet the requirement.

7.1.4 Review existing site and division procedures pertaining to the functional area against current requirements to determine if a revision is required for compliance.

7.1.5 As applicable, develop new site procedures or procedure changes to establish the Functional Area Site Procedure Volume(s).

7.2 NOTIFYING ORGANIZATIONAL MANAGEMENT OF NEED FOR A NEW SITE PROCEDURE, CHANGE, OR CANCELLATION

Functional Area Manager

7.2.1 Ensure that the procedure topic is relevant to the assigned functional area; if not, refer the procedure to the assigned FAM. (See Table 1: FEMP Functional Areas for guidance.)

7.2.2 For a new procedure or change, assign a Subject Expert (SE) and Checker to develop the draft. Define the priority of the procedure and assign an action completion date.

7.2.3 For a procedure cancellation, go to Step 7.11 of this procedure.

7.2.4 Direct the SE to request a technical writer to assist in draft development, if needed.

7.3 DEVELOPING A NEW SITE PROCEDURE OR REVISION

Subject Expert and Technical Writer (as applicable)

7.3.1 Develop a draft using the format guidelines in Attachment C: Site Procedure Format and Guidelines and the applicable drivers and/or source documents.

NOTE: If an external requirement states the need to use another format, comply with that requirement. Define this requirement in the scope of the procedure with a statement such as "This procedure is written to comply with the format requirements of (name of driver)."

7.3.2 If a site procedure is being revised, obtain the electronic copy from the applicable Procedure Coordinator.

7.3.3 Change the revision number (located in the procedure header) to the next sequential number.

7.3.4 Update the Issue and Revision Summary page to reflect revision. (This form is page two of a procedure).

7.3.5 Identify changes by shading revised/added text or lining through any deleted text, as shown in the example below.

Example

This is an example of shaded text that has been added or revised.

~~This is an example of lined out text that is deleted.~~

NOTE: A revision affecting over 50% of the procedure does not require shading.

NOTE: If ICPs exist in the procedure, incorporate as part of the revision to the procedure.

NOTE: If a form is required for the procedure, draft the form content and format and coordinate the final development and control of the form with the Forms and Procedures Section within the Administration Division.

Subject Expert

7.3.6 When the draft is satisfactory, send it to the Checker for review and verification.

Checker

7.3.7 Review the draft to verify that the site procedure content and format are accurate, it adequately instructs the user, and it implements applicable requirements. If the draft content is not accurate, resolve comments with the SE.

Subject Expert and Checker

7.3.8 When the draft is complete, sign the cover page to signify that the draft is ready for management review.

7.4 REVIEWING A NEW SITE PROCEDURE OR REVISION

Subject Expert and Functional Area Manager

7.4.1 Determine the required reviewers and the review period based on the complexity of the site procedure.

NOTE: Reviewers shall include a representative from any division required to perform an action within the procedure or from any division whose performance will be affected by the requirements of the procedure. For revisions, original reviewers must be included in the review.

NOTE: Typically, the procedure review period should be completed within five work days depending on the complexity of the procedure subject.

Subject Expert

7.4.2 Deliver the draft and a list of the reviewers with the determined review due date to the Procedure Coordinator.

7.4.3 Provide a copy of the draft to the FAM for review.

7.4.4 Prepare a Routing Memo (Attachment D) and a Site Procedure Review Comment Sheet (Attachment E) for each reviewing division and department.

NOTE: Department names may be specified on the routing memo.

Procedure Coordinator

7.4.5 Coordinate the review process.

7.4.6 Develop and use a tracking system to coordinate the review process and to ensure that reviewer comments are submitted on schedule. Use the tracking system to follow up on delinquent reviews.

Reviewer

7.4.7 Review the site procedure for specific areas of responsibility or for areas where the procedure step affects other operations. See Attachment C: Reviewer Guidelines. Record comments on the attached Site Procedure Review Comment Sheet.

7.4.8 If a comment is significant (as defined in the guidance in the table at the bottom of Attachment D: Routing Memo), check the Significant Review Comment column of the comment sheet.

7.4.9 Return the comment sheets and routing memo to the Procedure Coordinator by the specified due date.

Procedure Coordinator

7.4.10 Immediately upon receipt, forward the comments to the SE. Maintain temporary file copies of the review comments.

7.4.11 At the review due date, notify the SE that the review phase is complete and that the comments received require resolution.

7.4.12 If an organization has not returned its review by the due date, notify the SE for corrective action.

Subject Expert

7.4.13 For a procedure review that is overdue, contact the delinquent reviewer and expedite the completion of the review.

NOTE: Typically the comment resolution phase should be completed within five work days depending on the complexity of the procedure subject.

7.5 RESOLVING COMMENTS FOR A NEW SITE PROCEDURE OR REVISION

Subject Expert (and Technical Writer as appropriate)

7.5.1 Resolve all comments and record resolutions on the comment sheet.

Subject Expert

7.5.2 If a Significant Review Comment is not incorporated, discuss resolution with the reviewer.

NOTE: A signature is not required from the reviewer for significant review comments that are incorporated verbatim.

7.5.3 If the reviewer agrees that the significant comment has been resolved satisfactorily, obtain a concurrence signature on the comment sheet.

7.5.4 If the reviewer does not concur with the resolution, transmit comment to the reviewer's supervisor and the SE's supervisor for resolution. When the significant comment is resolved, obtain the reviewer's concurrence signature on the comment sheet.

Subject Expert (and Technical Writer as appropriate)

7.5.5 Review resolutions with the Checker.

7.5.6 Edit the site procedure to incorporate comment resolutions, as needed.

NOTE: If a new site procedure is written to provide specific direction for operating systems and equipment, perform a walk-through to validate the procedure.

7.5.7 If the procedure requires changes from the walk-through, convene a meeting of applicable reviewers to discuss the changes, obtain concurrence, and revise the procedure.

7.5.8 Repeat the walk-through, as needed, to validate procedure changes.

Subject Expert

7.5.9 Obtain Checker's concurrence signature on the master cover page.

7.5.10 Return the completed comment sheets and the revised site procedure master to the Procedure Coordinator.

Procedure Coordinator

7.5.11 Log receipt of resolution and retain the original review comment sheets on file.

7.6 APPROVING A NEW SITE PROCEDURE OR REVISION

Procedure Coordinator

7.6.1 Prepare a Routing Memo (Attachment D) and attach the site procedure package (master cover page and a copy of the comment resolutions).

NOTE: The master cover page is the original cover page with the Subject Expert and Checker signatures.

7.6.2 Record approval routing information and transmit site procedure to SE.

Subject Expert

7.6.3 Sign and forward the site procedure with all review comment sheets and approvals to the FAM.

7.7 AUTHORIZING A NEW SITE PROCEDURE OR REVISION

Functional Area Manager

7.7.1 Ensure the site procedure meets or is exempted from the format requirements of this site procedure and is consistent with the requirements of RM-0012.

7.7.2 Ensure that the proper reviews have been obtained, all comments have been resolved, and signatures have been obtained for significant comments.

7.7.3 If the site procedure is satisfactory, sign authorization and date the cover page. Return the site procedure to the SE.

7.7.4 If the site procedure is not satisfactory, resolve the issue(s) with the SE according to Section 7.5.

Subject Expert

7.7.5 Deliver the approved master copy of the site procedure to the Procedure Coordinator.

Procedure Coordinator

7.7.6 Record authorization date in tracking system.

7.7.7 Type the effective date of the procedure on the master cover page and add the effective date to the procedure header.

NOTE: Typically the effective date should be 15 working days from the date the procedure is authorized. The 15 working day period before the effective date provides time to authorize and distribute the procedure, and provide training.

7.8 DISTRIBUTING A NEW SITE PROCEDURE OR REVISION

Functional Area Managers and Division Managers

7.8.1 Submit a list of required controlled site procedure owners to Central Procedure Control.

NOTE: At a minimum, all other FAMs and division managers shall receive controlled copies of new site procedures or revisions.

Central Procedure Control

7.8.2 Distribute the authorized procedure to those on the list of controlled procedure owners.

7.8.3 Maintain the site procedure package on file.

Site Procedure Custodian

7.8.4 Upon receipt of a site procedure, immediately file it in the Functional Area Site Procedure Volumes and remove and discard superseded procedures and ICPs.

7.8.5 Sign the distribution receipt signifying the site procedure has been received and filed.

7.8.6 Return the receipt to CPC.

Central Procedure Control

7.8.7 Collect and file distribution receipts.

Site Procedure Custodian

7.8.8 If a secondary distribution is needed for division personnel, prepare controlled copies.

NOTE: Only the Site Procedure Custodian may distribute <u>controlled</u> procedures to division personnel.

7.8.9 At the top of the procedure, use red ink and stamp each secondary copy with the word "Controlled", and mark the procedure with a new control number. Ensure the control number on the secondary copy is traceable to the original control number by use of a log or incorporating part of the original control number with the secondary control number.

7.8.10 Prepare distribution receipts.

7.8.11 Distribute controlled secondary copies with receipts to applicable division personnel. Retain distribution list of the controlled copy holders with corresponding control numbers.

7.8.12 Collect distribution receipts and maintain on file within the division.

7.9 IMPLEMENTING A NEW SITE PROCEDURE OR REVISION

Supervisor

7.9.1 Upon receipt of a new site procedure or revision, and prior to the site procedure effective date or implementation of the site procedure, provide the required training to affected personnel.

7.10 PREPARING AND ISSUING AN INTERIM CHANGE TO A PROCEDURE (ICP)

Subject Expert

7.10.1 Initiate an ICP for affected procedures according to Attachment F: Interim Change to a Site Procedure.

7.10.2 Obtain ICP Number from CPC and add to ICP Form.

7.10.3 Forward ICP Form to FAM for approval.

Functional Area Manager

7.10.4 Assess the ICP and confirm the benefits and whether the justification warrants an ICP rather than a procedure revision.

NOTE: An ICP may be initiated:

- **To implement changes required to comply with Safety and Health (S&H) or Quality Assurance Program requirements or to improve S&H or quality practices.**

- Due to changes of FEMP requirements specified in DOE Orders, specifications, drawings, FERMCO site procedures, etc. when such revisions cause the site procedure in use to be incorrect, inaccurate, or inadequate.

- For purposes of cost effectiveness, ease of administration, and process improvement, or for the purpose of closing an audit or surveillance finding as specified in the disposition of a Corrective Action Report (CAR) or Deviation Report (DR). In this case, the CAR or DR number shall be noted on the ICP in the "Justification" section. To expedite necessary procedural changes when the affected schedule would be delayed by using the normal revision process, return the ICP to the subject expert.

  NOTE: Temporary ICPs shall be cancelled when they are no longer needed. Permanent ICP's shall be incorporated into the procedure as soon as practical. ICP's cannot make revisions to other ICP's. days.

Central Procedure Control

NOTE: The distribution of an ICP shall be given priority over other procedure distributions.

7.10.5 Distribute the ICP to Site Procedure Custodians of the affected procedure and file the master ICP.

NOTE: Pink paper shall be used to distribute controlled ICP copies.

Site Procedure Custodian

7.10.6 Sign the distribution receipt and return to CPC.

7.10.7 Complete a secondary controlled distribution of the ICP according to Section 7.8.7 of this procedure.

Controlled Document Owners

7.10.8 File the ICP facing the affected page of the controlled site procedure.

7.10.9 Sign the distribution receipt and return the ICP to the custodian.

7.10.10 Notify affected personnel of the ICP.

Subject Expert

7.10.11 Initiate a procedure revision as required (within 90 calendar days) according to Section 7.3 of this procedure. Prepare a revision to the affected procedure in accordance with these procedure steps.

Central Procedure Control

7.10.12 On or before the expiration date of an ICP, prepare a distribution receipt.

7.10.13 Send receipt to applicable Site Procedure Custodians for removal of the expired ICP.

Site Procedure Custodian

7.10.14 When a distribution receipt is received indicating ICP removal, complete secondary distribution as needed.

7.10.15 Remove the expired ICP from the applicable procedure and discard.

7.10.16 Sign the distribution receipt and return to CPC.

7.11 CANCELLING A SITE PROCEDURE/ICP

Subject Expert

7.11.1 Coordinate cancellation of a site procedure ICP with the Procedure Coordinator.

Procedure Coordinator

7.11.2 Prepare a routing memo for cancellation concurrence to the responsible divisions and the FAM. Log concurrence, date sent, due date, procedure/ICP number and title.

7.11.3 Transmit the routing memo to concurring managers.

7.11.4 After concurrence is received, forward approval package to CPC. If a manager does not concur with the cancellation, notify the SE for further action.

7.11.5 Record cancellation date on the cover page and on the Issue and Revision Summary page.

Central Procedure Control

7.11.6 Process cancellation of the procedure/ICP and distribute to Site Procedure Custodians.

Site Procedure Custodian

7.11.7 Sign the receipt to the procedure/ICP cancellation and return the receipt to CPC.

7.11.8 Remove cancelled procedure from the applicable Functional Area Site Procedure volume and discard.

7.11.9 Complete a secondary distribution of the cancellation to division controlled copy owners. Collect the distribution receipts and maintain on file.

7.12 MANAGING DIVISIONAL PROCEDURES

NOTE: Divisions (or delegated departments within divisions) will develop divisional procedures if the procedure is to be performed only by persons within that division, and if the procedure does not impact the operations of another division. If both of these qualifiers are not met, the procedure is a site procedure and will be developed by following the procedural steps for site procedures. Divisional procedures will not be included in the Functional Area Site Procedure Volumes. They will be retained within the owner division and will be made available to those who must perform the procedure.

7.12.1 Develop and implement a divisional procedure system that includes, at a minimum, the following:

- A divisional procedure that documents how the division will identify, develop, review, approve, authorize, distribute, change, control, and cancel divisional procedures.

  NOTE: The procedure should define the format (section titles and definition of content) for all procedures developed within the division. The minimum format and content requirements are listed below.

- The procedure for site procedures (MS-08-1001) can be adapted for the division's procedure on procedures.

- A divisional procedure numbering system that is compatible with and does not conflict with the site procedure system.

NOTE: A suggested numbering system will identify the division and will include a number which logically orders procedures. For example, numbers could be based on department work scope, a quality assurance criterion, or some other organization of work.

- The assignment of responsibility for procedure management to a person, group, or department to ensure consistency and good management.

Minimum requirements for format and content of divisional procedures are as follows:

- A standardized cover page that includes procedure title, procedure number, revision number, effective date, and required signatures
- A standardized header that includes on each page the procedure title, number, revision number, and page number (with total number of pages in the document)
- A standardized table of content
- A record of document issues and revisions
- Purpose of the procedure
- Scope of the procedure
- Brief description of responsibilities for implementing the procedure
- Procedure steps to describe how the division will identify need for divisional procedures; and how the division will develop or revise, review, resolve, approve, authorize, and control distribution of divisional procedures

8.0 DRIVERS

8.1 FERMCO RM-0012, Quality Assurance Program

8.2 FERMCO RM-0016, The Management Plan, FERMCO Policies and Requirements Manual

9.0 DEFINITIONS

9.1 Action Completion Date - Date assigned by the FAM for completing a new procedure according to the priority of the procedure.

9.2 Central Procedure Control (CPC) - A group within Forms and Procedures Development, Administration Division that distributes controlled site procedures, maintains the site procedure management database and records, issues the Site Procedure Index, and performs periodic assessments of controlled site procedure volumes.

9.3 Checker - An employee competent in the subject matter of the site procedure who verifies and validates the procedure content. The checker shall be assigned by the responsible Functional Area Manager.

9.4 Controlled Procedure Distribution - A formal system for delivering controlled copies of authorized site procedures and subsequent revisions with control numbers and receipts to designated individuals for the purpose of preventing the use of outdated procedures.

9.5 Division Procedure - A document providing detailed, written direction for performing any repetitive activity. A division procedure may only direct personnel within that division and shall not affect the operations of another division or assign duties to personnel from other divisions. The owner of a division procedure is the applicable division manager who has primary responsibility for the management of the procedure. Divisions may designate procedures as department procedures.

9.6 Driver - Operational, technical, and administrative external or internal requirements, derived from agreement, law, contract, regulations, or DOE directives, with which FERMCO maintains compliance (as cited in the S/RID).

9.7 External Requirement - A document that identifies the requirements imposed on FERMCO from outside sources for a functional area. External requirements include statutory laws, DOE Orders, contract regulations and clauses, and others. (External requirement documents at FERMCO are cited in the Standards/Requirements Identification Document [S/RID].)

9.8 Functional Area - A logical grouping of activities associated with environmental, safety, health, or business management processes of a facility.

9.9 Functional Area Site Procedure Volume(s) - A complete set of volumes (organized by functional areas) containing all FERMCO site procedures. The set is controlled by Central Procedure Control and maintained for each division by a Site Procedure Custodian.

9.10 Functional Area Manager (FAM) - A FERMCO manager, assigned by the President, who has primary responsibilities for ensuring that all management systems and documentation necessary to satisfy requirements of the assigned functional area(s) are developed and implemented.

9.11 Forms and Procedures Development - A section of the Administration Division providing technical writing, editing, and form design services.

9.12 Interim Change to a Procedure (ICP) (Attachment F) - A change to an approved site procedure when the change must be implemented before a revision can be made to the procedure through the normal review and approval cycle. Interim changes can be temporary or permanent.

9.13 Internal Requirements Document - A document establishing the specific standards and requirements that a functional area must satisfy. An internal requirement also identifies organizational responsibilities to ensure these standards are met. An internal requirement is not an instructional document and is not to be used when performing work. (Examples of internal requirement documents at FERMCO are plans, programs, information manuals, policies, etc.)

9.14 Organizational Manager - A FERMCO employee assigned to manage a FERMCO division or department.

9.15 Procedure Coordinator - An employee within a division assigned to prepare, track, and collect routing memos for site procedure reviews and approvals.

9.16 Reviewer - An employee who reviews a site procedure for his/her specific area of responsibility or expertise.

9.17 Revision - A second or subsequent issue of a procedure which supersedes the preceding issue.

9.18 Secondary Distribution - The act of distributing and controlling a second copy of a controlled site procedure to applicable division personnel as determined by division management.

9.19 Significant Review Comment (SRC) - A review comment stating technical inaccuracies, noncompliance, and/or inconsistencies with established requirements, regulations, or procedures. An SRC requires satisfactory resolution by the SE and a concurrence signature by the reviewing organization before issuance. (See Attachment D: Example of Routing Memo -- Review Guidelines for additional guidance on significant review comments.)

9.20 Site Procedure Custodian - An employee assigned to maintain a Functional Area Site Procedure Volume Set or specific site procedure volumes for a division or other organizational/geographic unit; and/or to perform a secondary distribution to division personnel as needed.

9.21 Site Procedure - A document that gives general written direction for performing any repetitive activity to satisfy a project requirement. Site procedures are written for activities that are performed by personnel in more than one division or if the procedure affects how another division conducts its activities.

9.22 Standards/Requirements Identification Document (S/RID) - A document that cites all requirements for the functional areas that FERMCO must satisfy in the conduct of its activities.

9.23 Subject Expert (SE) - An employee experienced and knowledgeable in the activity covered by the procedure who is responsible for the development or revision of the assigned procedure.

9.24 Technical Writer - An individual who develops, writes, and edits written technical and administrative materials for documents or other publications concerned with work methods and procedures.

9.25 Validate - The process of ensuring that a procedure or other instructional document is correct. The process will involve a walk-through of the procedure (when the procedure is used in the work area and verified under work conditions) or table-top review (a step-by-step examination of the procedure with appropriate personnel.)

9.26 Verify - The act of reviewing, inspecting, testing, checking, conducting surveillance, auditing, or otherwise determining and documenting whether data, items, processes, services, or documents conform to specified requirements.

TABLE 1 - FEMP FUNCTIONAL AREAS

No.	FUNCTIONAL AREAS	MANAGER
1	Configuration Management (CM)	ENGINEERING
2	Engineering Design (ED)	ENGINEERING
3	Emergency Preparedness and Management (EM)	HEALTH & SAFETY
4	Research and Development and Experimental Activities (RD)	TECHNOLOGY PROG.
5	Environmental Protection (EP)	ENVIRON COMPLIANCE
6	Fire Protection (FP)	HEALTH & SAFETY
7	Maintenance (MT)	RSO
8	Management Systems (MS) -Procedures and Internal Requirements * -Policies and External Requirements *	SPI QA SPI
9	Nuclear and Systems Safety (NS)	HEALTH & SAFETY
10	Occupational Safety and Health (SH)	HEALTH & SAFETY
11	Operations (OP)	RSO
12	Packaging and Transportation (PT)	WPM
13	Quality Assurance (QA)	QA
14	Radiological Protection (RP)	HEALTH & SAFETY
15	Safeguards and Security (SE)	ADMINISTRATION
16	Training and Qualification (TR)	ADMINISTRATION
17	Environmental Restoration and Waste Management (EW) -Env. Sciences* -Waste Mgmt* -CRU Operations* -Reg. Coordination*	EVIRON COMPLIANCE ENV TECH SERV WPM CRU DIR. EVIRON COMPLIANCE
18	Construction (CT)	CONSTRUCTION/RA
19	Acquisition (AC)	C&A
20	Human Resources and Industrial Relations (HR)	ADMINISTRATION
21	Project Control (PC)	P&IC
22	Property Management (PM)	C&A
23	Public Involvement (PI)	PUBLIC AFFAIRS
24	Financial Management (FM)	FINANCE

* Some functional areas, while managed by one identified functional area manager, have been subdivided into several discrete areas, each coordinated by another manager.

ATTACHMENT A - FERMCO SITE PROCEDURE SYSTEM FLOW CHART

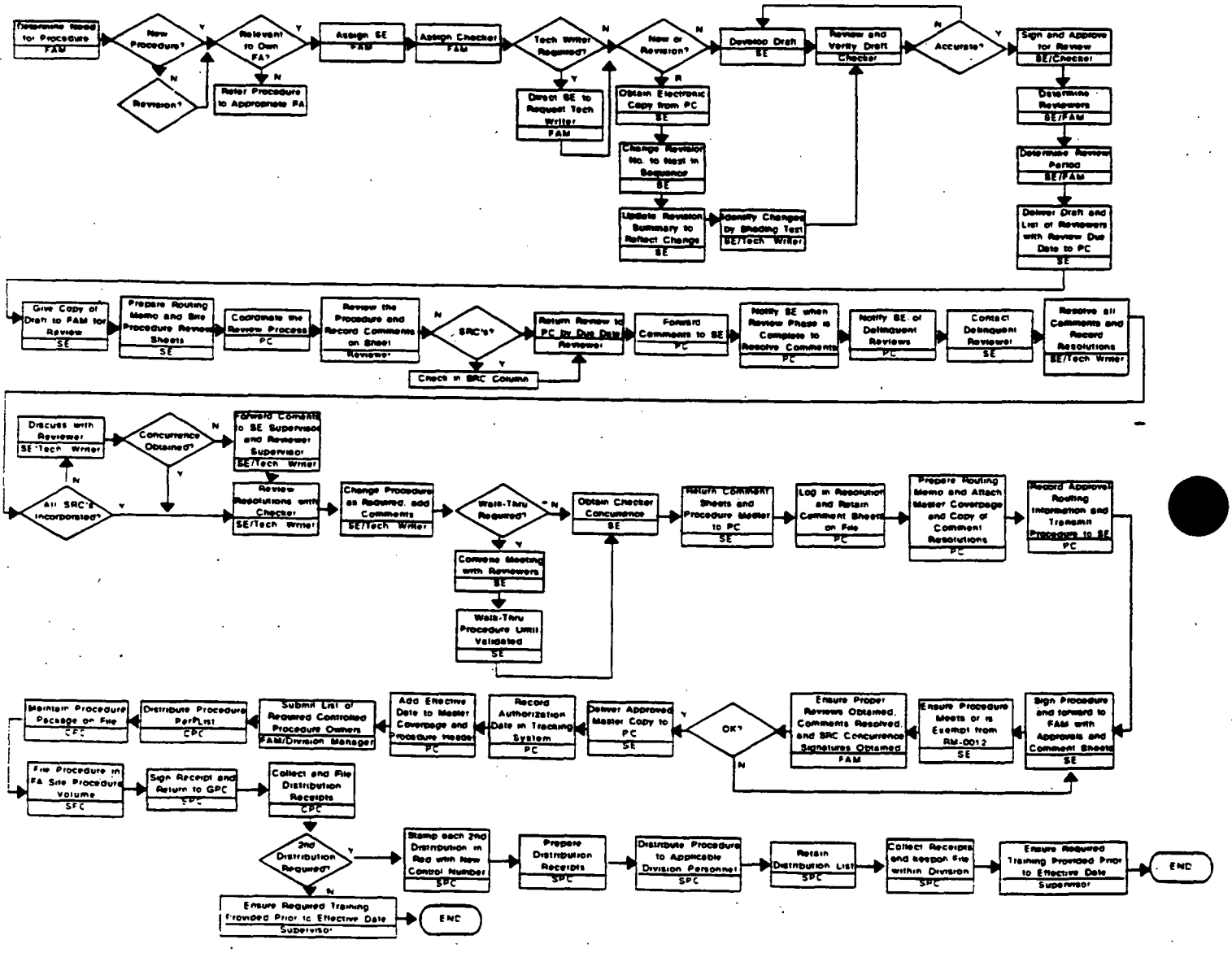

ATTACHMENT B - NUMBERING SYSTEM FOR SITE PROCEDURAL SYSTEM

The Functional Area Site Procedure Volumes include site procedures necessary to implement requirements of all Functional Areas identified in RM-0016.

Each procedure within each volume is given a sequential number by the functional area responsible for the procedure. The following example further describes the numbering system for the Site Procedural System.

Example: PROCEDURE NUMBER EM-0017 (formerly numbered SSOP-0058)

	EM	0017
Functional Area (use the two letter functional area number from Table 1)	----------	
Document number (consecutive numbering using four digits to identify specific procedure)		----------

E: **Current procedure number referenced in parenthesis for clear transition.**

The Table of Contents in the front of each volume of the Functional Area Site Procedure Volumes lists the new procedure number, existing procedure number, procedure title, revision number, and effective date for each procedure in that volume.

NOTE: **If a Functional Area Site Procedure Volume requires more than one binder, a complete Table of Contents in each binder will identify all of the procedures in the volume. The Table of Contents will be organized by volume, and the procedures will be listed under the correct volume by number designation; e.g., Volume 1, Volume 2.**

Because of the consistency of their current numbering systems, the following Functional Areas will maintain their numbering methodology:

- **Engineering Design (ED)**
- **Construction (CT)**
- **Human Resources and Industrial Relations (HR)**
- **Project Control (PC)**

ATTACHMENT C - SITE PROCEDURE FORMAT AND GUIDELINES, PAGE 1 OF 2

SITE PROCEDURE FORMAT AND GUIDELINES

FERMCO site procedures shall consist of a Cover Sheet, Table of Contents, Issue and Revision Summary page, the required consecutively numbered procedure pages, and any required attachments. An abbreviated header shall be used as shown in this procedure, including the mandatory compliance statement. Indicate the name of the SE and Checker with phone number directly below the procedure header for questions during the review and approval phases.

The typeface font should be WordPerfect, Letter Gothic - 12 point.

Each procedure shall be prepared in the following format identifying the responsible key-person and actions required in chronological sequence. These sections are mandatory and must be in the order shown.

1. The **Cover Sheet** states the site procedure title; site procedure number; revision number; effective date; review, approval, and authorization signature lines; and FERMCO address. The cover sheet of this procedure should be used as a model for all cover sheets.

2. The **Table of Contents** presents each section of the procedure, list of tables, and a list of attachments in that order. The information for the Table of Contents is organized and formatted as shown in the Table of Contents of this site procedure. The Table of Contents is page 1 of the procedure.

3. The **Issue and Revision Summary** page shows the history of the original issue and all revisions to the procedure. Revision 0 is the original issue. All future revisions are shown in chronological order. Each description should state why the revision was made and who requested the revision. Refer to the Issue and Revision Summary in this procedure for an example.

   NOTE: During draft of procedures, use an alpha designator (A, B, C) for the revisions.

4. **PURPOSE** (Section 1.0) provides a clear, concise statement explaining the intent of the procedure. The purpose statement should briefly reflect the significance of the procedure to the project (i.e., vision, mission, values, goals, objectives).

   NOTE: To simply state that the purpose of the procedure is to explain how the activity will be performed at the FEMP by FERMCO is an insufficient Purpose statement.

5. **SCOPE** (Section 2.0) establishes the limits of the procedure. The activity/function applicable to the procedure and the affected organizations should be specified.

6. **REFERENCES** (Section 3.0) contains relevant interface documents used to implement a procedure.

7. **RESPONSIBILITIES** (Section 4.0) provides a list of those organizations/positions that have responsibilities listed within the procedure. A brief, overall description of the responsibility should be included as shown in this procedure. If the procedure applies to all organizations, this should be stated.

8. **GENERAL** (Section 5.0) contains explanatory information that is not specific to the procedure section (Section 7.0) but is necessary for clarity and understanding of the procedure. The General section shall not contain action steps or procedural information; however it may direct the user to that information. The General section shall not contain lengthy detailed information that is more appropriate as an attachment.

9. **PREREQUISITES** (Section 6.0) identifies those actions needed before the procedure can be performed. Prerequisites include, for example, such things as tools and equipment, qualifications, initial conditions, training, and safety assessments. If there are no prerequisites, state "None" in this section.

ATTACHMENT C - SITE PROCEDURE FORMAT AND GUIDELINES, PAGE 2 OF 2

SITE PROCEDURE FORMAT AND GUIDELINES

10. **PROCEDURE** (Section 7.0) describes, but is not limited to:

    a. The action steps required to accomplish the activities covered by the procedure.
    b. The chronological order of the actions to be performed.
    c. The key-person responsible for each step.
    d. The required documentation activities.

    Action steps shall be written using a command verb to perform a specific step instead of declarative sentences. Steps do not begin with words such as will, should, must, and shall for expressing required actions. The procedure section is written to a level of detail consistent with qualifications and training of the expected users. Information that is useful only to reviewers or other persons involved in supporting the procedure is excluded.

    WARNINGS are used in the procedure only for conditions that may cause injury to, or death of, procedure users, if extreme care is not taken.

    CAUTIONS are included in the procedure text when a condition may cause equipment/material damage. Warnings and Cautions always precede the step they address, and begin and end on the same page as the procedure step to which they apply.

    NOTES: may precede or follow the step they are addressing depending on their usage as follows:

    a. Notes are placed before a step when they provide descriptive or explanatory information to aid the user in performing or understanding the given procedure step.
    b. Notes are placed after a step when they concern step results or provide information that lends continuity to the flow of the procedure.

    Do not include action steps in notes. Include only one topic in each note.

11. **DRIVERS** (Section 8.0) lists drivers of the document. Drivers or administrative requirements identify the requirement for the procedure. Interface documents and drivers are listed by official document number and title. See the Drivers section of this procedure for an example of format.

12. **DEFINITIONS** (Section 9.0) includes those terms and statements contained in the body of the document which require definition for uniform understanding. The terms are listed in alphabetical order.

13. **TABLES** are used to display information in organized rows and columns and may be incorporated within the text (if less than 1 page) as close to their reference as possible, or placed after the procedure section before any Attachments.

14. **ATTACHMENTS** are placed after the procedure section and are used to provide visual aids such as forms, figures, maps, flow charts, illustrations, and diagrams that are needed to perform the activities. Attachments may also provide guides to, or amplifications of, specific procedural steps and other items such as source requirements, acceptance criteria and supplemental guidance material (such as charts, codes, or numbering systems).

NOTE: **Because of the consistency of their current format, the following Functional Area's procedures can maintain their current formats if desired:**

- **Engineering (ED)**
- **Construction (CT)**
- **Human Resources and Industrial Relations (HR)**
- **Project Control (PC)**

New Coversheets and Issue Revision Summary sheets will be required for these procedures in accordance with this procedure.

ATTACHMENT D - EXAMPLE OF ROUTING MEMO

PROCEDURE MEMO

TO: (Reviewing Division Manager)

FROM: (Subject Expert, Phone Number)
DATE:
DOCUMENT: (Procedure Title and Number)

ACTION REQUIRED:

PROCEDURE REVIEW

1. Please review only those sections of the procedure pertinent to your organization. A minimum number of personnel should be involved in order to expedite the review process.

2. Record comments on the attached document review comment sheet.

3. **Return by** required return date to Procedure Coordinator at Mail Stop _____.

   If there are NO COMMENTS, sign below and return this sheet only.

_____
Division Manager Signature Date

REVIEWER GUIDELINES

1.	Review for specific area of responsibility.
2.	Direct comments to the actions within the scope of the procedure. Modification of equipment or new equipment development should not be addressed in the review.
3.	Comment only on the Review Comment Sheet. Make a statement. Avoid writing questions. If necessary to resolve a conflict, call the SE indicated on the procedure.
4.	Indicate a comment is a significant review comment if the change indicated is required to meet FERMCO policies, established regulations applicable to the FEMP operation, or has significant procedural impact for a safe/efficient operation. A comment that is a suggestion, grammar/spelling correction, or organizational title change shall not be considered significant.
5.	If the technical or administrative accuracy of the procedure is questionable, compare procedure to source documents and/or contact the SE.
6.	If material is technically correct, do not change because of personal opinion.

ATTACHMENT E - SITE PROCEDURE REVIEW COMMENT SHEET

PRT/OWNER:	REVIEWING DIVISION:	DATE:
DOCUMENT NUMBER AND TITLE:		DATE COMMENTS DUE:

ITEM NO.	REVIEWER NAME	PAGE NO./ SECTION	COMMENT	SRC *	COMMENT RESOLUTION

SIGNIFICANT REVIEW COMMENT RESOLUTION APPROVAL SIGNATURE:	DATE:

FS-F-3069 (10/22/93)

ATTACHMENT F - INTERIM CHANGE TO A SITE PROCEDURE (ICP), PAGE 1 OF 3

INTERIM CHANGE TO A SITE PROCEDURE (ICP)

DATE: (1)	PROCEDURE NO.: (2)	ICP NO.: (3)
PROCEDURE TITLE: (4)		REV. NO.: (5)
ICP TYPE: (6) [ ] PERMANENT [ ] TEMPORARY		EXPIRATION DATE: (7)
JUSTIFICATION: (8)		
AFFECTED PARAGRAPH(s): (9)		
EXISTING REQUIREMENT(s): (10)		
CHANGE(s): (11)		
SUBJECT EXPERT: (12)	CHECKER: (13)	
FUNCTIONAL AREA MANAGER: (14) FUNCTIONAL AREA: (15)		
OTHER AFFECTED FERMCO DIVISION(s): [ ] YES [ ] (16)		
EFFECTIVE DATE: (17)		

ATTACHMENT F - INTERIM CHANGE TO A SITE PROCEDURE (ICP), SHEET 2 OF 3

INSTRUCTIONS FOR COMPLETING THE ICP FORM

SUBJECT EXPERT

1. Enter date ICP is initiated.
2. Enter the number of the site procedure being changed.
3. Enter in ICP number obtained from CPC.
4. Enter the title of the site procedure being changed by the ICP.
5. Enter the revision number of the site procedure being changed by the ICP.
6. Indicate whether the ICP is a permanent change or a temporary change by checking the appropriate blank.

   NOTE: A temporary ICP is used when a change is required to a site procedure for a specific application or limited duration of time which shall be specified on the ICP. If a temporary ICP is not incorporated into the site procedure, it will expire on the specified date.

   NOTE: A permanent ICP is used for permanent changes to the site procedure and shall be incorporated into the next revision of the site procedure. A permanent ICP is in effect until incorporated into the site procedure.

   For a permanent ICP, enter N/A. For a temporary change, enter the date the ICP will expire.
8. Enter the justification for the ICP. If the ICP is in response to a CAR or DR, enter the CAR or DR number.
9. List the existing paragraph(s)/section(s) being changed.
10. Enter a brief summary of the existing requirement(s) that are being changed.
11. Enter the changes to the site procedure.
12. Sign as the ICP originator.
17. Enter effective date required.

CHECKER

13. Sign and date to signify approval of the ICP
15. Enter the name of the functional area to which the procedure is assigned.
16. If applicable, indicate FERMCO divisions that are affected by the changes to the site procedure. If yes, enter the affected divisions.

FUNCTIONAL AREA MANGER

14. Sign and date to signify approval of the ICP.

ATTACHMENT F - INTERIM CHANGE TO A SITE PROCEDURE (ICP), SHEET 3 OF 3

INSTRUCTIONS FOR COMPLETING THE ICP FORM

OTHER AFFECTED FERMCO DIVISION(S) (IF LISTED)

16. The affected FAMs/FERMCO Division Managers, if any, or their designees will sign and date to signify concurrence with the ICP.

    NOTE: If additional space is required for any entries, attach a sheet of paper which includes the ICP number, CP title, and title of the entry. On the ICP form, enter "see attached sheet" in the appropriate entry.

    NOTE: An ICP is effective on the date it is approved by the FAM.

    NOTE: Approved ICPs shall be printed on pink paper and distributed to owners of Functional Area Site Procedure Volumes.

    NOTE: While an ICP is effective, it is a permanent part of the site procedure, and the owner of the Functional Area Site Procedure Volumes shall place the ICP in front of the affected site procedure page(s).

ATTACHMENT G - FERMCO SITE PROCEDURE SYSTEM IMPLEMENTATION REQUIREMENTS, PAGE 1 OF 2

1.0 PURPOSE

This attachment provides instruction for the identification, reclassification, and development of site procedures for the Functional Area Site Procedure Volumes. The restructuring process shall be completed within six months from the effective date of this procedure.

2.0 SCOPE

The instructions in this attachment apply to all site procedures (as defined in Section 9.0).

3.0 INSTRUCTIONS

3.1 EVALUATION OF EXISTING PROCEDURES

Functional Area Manager (FAM)

3.1.1 Review the assigned functional area section(s) of the S/RID to identify the site procedures that are required to implement functional area requirements.

3.1.2 Develop a Table of Contents of required procedures to include existing site procedures, division procedures that need to be site procedures, and procedures that must be developed for each Functional Area Procedure Volume. The Table of Contents will include the new procedure number and title. Attachment F: Numbering System for the Site Procedure System describes this numbering system.

3.1.3 Identify any existing procedures that are inadequate or are no longer applicable that must be revised, replaced or cancelled.

3.2 RECLASSIFICATION AND DEVELOPMENT OF EXISTING PROCEDURES

Functional Area Manager (FAM)

3.2.1 All procedures identified as usable shall be revised according to the format of this procedure within one year from the effective date of this procedure.

3.2.2 For procedures that are inadequate or determined "need to be developed," initiate development of new procedures according to Section 7.3 of this procedure.

3.2.3 For procedures that are no longer applicable, initiate a cancellation according to Section 7.11 of this procedure.

ATTACHMENT G - FERMCO SITE PROCEDURE SYSTEM IMPLEMENTATION REQUIREMENTS, PAGE 2 OF 2

3.3 ISSUANCE OF EXISTING PROCEDURES

3.3.1 All procedures required as site procedures in the new FERMCO Site Procedure System are to be issued by Central Procedure Control within 60 days of issuance of Rev. 0 of this procedure.

NOTE: **Issued procedures are valid unless revised after the effective date of this procedure, whether they are still in old books or in new volumes.**

Fernald Environmental

FERMCO

Restoration Management Corporation

SITE DOCUMENT INDEX

May 1, 1995

(Supersedes SDI-100 Dated February 1, 1995)

Central Procedure Control
Administration Division

NON-CONTROLLED COPY

290062

6989

SITE DOCUMENT INDEX
May 1, 1995

TABLE OF CONTENTS

SECTION	TITLE
	Introduction
	Functional Area Listing
1	Site Procedures
2	Manuals
3	Plans
4	Charters

000053

6989

0000064

0888

SITE DOCUMENT INDEX
May 1, 1995

INTRODUCTION

The Site Document Index is a multiple listing of current site documents. The index is divided into three sections.

Section 1 is a listing of Site procedures by Functional Area. A listing of all Functional Areas and their document number designator is attached. Sections 2 and 3 are listings of Manuals and Plans that are considered Site documents. Section 4 is a list of Charters still in effect.

The index is distributed monthly. As documents are issued, revised, or cancelled, it is suggested that a hand written update be made in the index until the issuance of a new index.

Copies of Site documents should be requested from your Functional Area Procedure Custodian.

Direct questions pertaining to the index to Central Procedure Control, 648-6449.

CENTRAL PROCEDURE CONTROL

SITE DOCUMENT INDEX
May 1, 1995

FUNCTIONAL AREA LISTING

Functional Area	Document Designator	FAM
Configuration Management	CM	R. P. Heck
Engineering Design	ED	R. P. Heck
Emergency Preparedness & Management	EM	S. L. Hinnefeld
Research & Development & Experimental Activities	RD	P. J. Pettit
Environmental Protection	EP	T. D. Hagen
Fire Protection	FP	S. L. Hinnefeld
Maintenance	MT	D. Paine
Management Systems	MS	R. E. Gates
Nuclear & Systems Safety	NS	S. L. Hinnefeld
Occupational Safety & Health	SH	S. L. Hinnefeld
Operations	OP	D. Paine
Packaging & Transportation	PT	M. L. West
Quality Assurance	QA	R. E. Kline
Radiological Protection	RP	S. L. Hinnefeld
Safeguards & Security	SE	E. E. Zobrist
Training & Qualification	TR	E. E. Zobrist
Environmental Restoration & Waste Management	EW	T. D. Hagen
Construction	CT	M. F. Albertin
Acquisition	AC	G. L. Cruce
Human Resources & Industrial Relations	HR	E. E. Zobrist
Project Control	PC	R. E. Gates
Property Management	PM	G. L. Cruce
Public Involvement	PI	J. R. Hoopes
Financial Management	FM	J. M. Lee

000065

6869

SECTION 1

SITE PROCEDURES

990066

6989

	Doc#	Doc Title	Rev #	Eff Date	FAM	SE	Supersedes
ACQUISITION							
	AC-0001	REQUEST FOR PURCHASE	4	10/30/92	CRUCE		FMPC-0302
	AC-0002	CONTRACT ADMINISTRATION	0	02/01/88	CRUCE		FMPC-0306
	AC-0003	INITIATING AND PREPARING A TECHNICAL REVIEW	0	08/21/92	CRUCE		SSOP-0317
CONFIGURATION MANAGEMENT							
	CM-0001	CONFIGURATION MANAGEMENT	0	09/23/94	HECK	S. REUTCKE	12-5004
CONSTRUCTION							
	CT 1.4.0	CPI ACTION PLAN	2	02/22/95	ALBERTIN	W. WAIS	NONE
	CT 1.5.0	INTERIM CHANGES TO CONSTRUCTION PROCEDURES	2	03/01/95	ALBERTIN	W. WAIS	NONE
	CT 1.6.0	CONSTRUCTION WELDING PROGRAM MANAGEMENT	1	02/22/95	ALBERTIN	W. WAIS	NONE
	CT 1.6.1	WELDING PROCEDURE - ASME SECTION IX	1	02/22/95	ALBERTIN	W. WAIS	NONE
	CT 1.6.2	WELDING PROCEDURE - AWS D1.1	1	02/22/95	ALBERTIN	W. WAIS	NONE
	CT 1.6.3	WELDING PROCEDURE - QUALIFICATION OF WELDERS AND WELDING OPERATORS	1	02/24/95	ALBERTIN	W. WAIS	NONE
	CT 1.6.4	WELDING PROCEDURE - CONTROL OF WELDING CONSUMABLES	1	02/22/95	ALBERTIN	W. WAIS	NONE
	CT 1.7.0	CONSTRUCTION DIVISION MANAGEMENT ASSESSMENT PROGRAM	0	02/27/95	ALBERTIN	W. WAIS	NONE
	CT 2.1.1	CONSTRUCTION WORK PACKAGE PREPARATION	2	02/22/95	ALBERTIN	W. WAIS	NONE
	CT 2.1.2	CONSTRUCTION SAFE SHUTDOWN REQUIREMENTS	1	02/22/95	ALBERTIN	W. WAIS	NONE
	CT 2.1.3	CONSTRUCTION ESTIMATING	2	02/22/95	ALBERTIN	W. WAIS	NONE

Doc#	Doc Title	Rev #	Eff Date	FAM	SE	Supersedes
CT 2.1.4	CONSTRUCTION SCHEDULING	2	02/22/95	ALBERTIN	W. WAIS	NONE
CT 2.1.5	CONSTRUCTABILITY REVIEWS	2	02/22/95	ALBERTIN	W. WAIS	NONE
CT 2.2.1	PETTY CASH	2	02/22/95	ALBERTIN	W. WAIS	NONE
CT 2.2.2	CONSTRUCTION REQUISITIONS	2	02/22/95	ALBERTIN	W. WAIS	NONE
CT 2.2.3	PRE-BID MEETINGS	2	02/22/95	ALBERTIN	W. WAIS	NONE
CT 2.2.4	PRE-CONSTRUCTION KICK-OFF MEETINGS	2	02/22/95	ALBERTIN	W. WAIS	NONE
CT 2.2.6	CONSTRUCTION FABRICATION/STAGING AREA	3	02/22/95	ALBERTIN	W. WAIS	NONE
CT 2.3.1	REGULATORY AND DOE ORDER COMPLIANCE	2	02/22/95	ALBERTIN	W. WAIS	NONE
CT 2.3.2	CONSTRUCTION HAZARDS ANALYSIS COORDINATION	2	02/22/95	ALBERTIN	W. WAIS	NONE
CT 2.3.3	DEVIATION REPORT AND CORRECTIVE ACTION REPORT RESOLUTION	2	02/22/95	ALBERTIN	W. WAIS	NONE
CT 2.3.4	AUDIT COORDINATION	2	02/22/95	ALBERTIN	W. WAIS	NONE
CT 2.3.5	CONSTRUCTION TESTING	2	02/22/95	ALBERTIN	W. WAIS	NONE
CT 2.3.6	PROJECT/CONSTRUCTION WASTE MANAGEMENT	1	02/22/95	ALBERTIN	W. WAIS	NONE
CT 2.4.1	CONSTRUCTION DOCUMENT CONTROL	3	03/10/95	ALBERTIN	D. CRAWLEY	NONE
CT 2.4.2	SUPPLIER DOCUMENTS	2	03/01/95	ALBERTIN	W. WAIS	NONE
CT 2.4.3	RECORDS MANAGEMENT	2	03/01/95	ALBERTIN	W. WAIS	NONE
CT 2.4.4	CONSTRUCTION DOCUMENT FILING SYSTEM	0	03/27/95	ALBERTIN	D. CRAWLEY	NONE
CT 3.1.1	SUBCONTRACTOR SAFETY PROGRAM ADMINISTRATION	2	02/22/95	ALBERTIN	W. WAIS	NONE

000068

Doc#	Doc Title	Rev #	Eff Date	FAM	SE	Supersedes
CT 3.1.2	SUBCONTRACTOR TRAINING AND BADGING	2	02/22/95	ALBERTIN	W. WAIS	NONE
CT 3.1.3	SUBCONTRACTOR COORDINATION MEETINGS	2	02/22/95	ALBERTIN	W. WAIS	NONE
CT 3.1.4	CHANGE ORDERS	2	02/22/95	ALBERTIN	W. WAIS	NONE
CT 3.1.5	CLAIMS/CLAIN PREVENTION	2	02/22/95	ALBERTIN	W. WAIS	NONE
CT 3.1.6	SUBCONTRACTOR BACKCHARGES	2	02/22/95	ALBERTIN	W. WAIS	NONE
CT 3.1.7	SUBCONTRACTOR PROGRESS PAYMENTS	2	02/22/95	ALBERTIN	W. WAIS	NONE
CT 3.1.8	SUBCONTRACTOR CLOSE-OUT	2	02/22/95	ALBERTIN	W. WAIS	NONE
CT 3.1.9	WARRANTY MANAGEMENT	2	02/22/95	ALBERTIN	W. WAIS	NONE
CT 3.2.1	SUBCONTRACTOR SCHEDULE STATUS	2	02/22/95	ALBERTIN	W. WAIS	NONE
CT 3.3.1	DAILY ACTIVITY REPORTS	2	02/22/95	ALBERTIN	W. WAIS	NONE
CT 3.3.3	FIELD LOGBOOKS	2	02/22/95	ALBERTIN	W. WAIS	NONE
CT 3.3.4	PROGRESS PHOTOS AND VIDEOS	4	05/05/95	ALBERTIN	R. MCCULLOUGH	NONE
CT 3.4.1	WORK PERMIT REQUIREMENTS AND COORDINATION	2	02/22/95	ALBERTIN	W. WAIS	NONE
CT 3.4.2	QA AND QC COORDINATION	1	02/22/95	ALBERTIN	W. WAIS	NONE
CT 3.4.3	RADIOLOGICAL WORK PERMIT REQUIREMENTS AND COORDINATION	2	02/22/95	ALBERTIN	W. WAIS	NONE
CT 3.4.4	CONFINED SPACE EVALUATION/PERMIT AND CHEMICAL HAZARDOUS MATERIAL WORK PERMIT REQUIREMENTS AND COORDINATION	2	02/22/95	ALBERTIN	W. WAIS	NONE
CT 3.4.5	HEALTH AND SAFETY REQUIREMENTS AND COORDINATION	2	02/22/95	ALBERTIN	W. WAIS	NONE
CT 3.4.6	OPEN FLAME WELDING AND HAZARDOUS WORK PERMIT REQUIREMENTS AND COORDINATION	2	02/22/95	ALBERTIN	W. WAIS	NONE
CT 3.4.7	REVIEW OF CONSTRUCTIONS REQUIREMENTS FOR PRIVATE PROPERTY ACCESS AND FOR NEPA COMPLIANCE	2	02/22/95	ALBERTIN	W. WAIS	NONE

Doc#	Doc Title	Rev #	Eff Date	FAM	SE	Supersedes
CT 3.5.1	AS-BUILT DRAWINGS	2	02/22/95	ALBERTIN	W. WAIS	NONE
CT 3.5.3	REQUEST FOR CLARIFICATION OF INFORMATION/FIELD CHANGE REQUESTS	2	03/01/95	ALBERTIN	W. WAIS	NONE
CT 3.5.4	FIELD SURVEYING AND TESTING SERVICES	2	02/22/95	ALBERTIN	W. WAIS	NONE
CT 3.6.1	PUNCHLIST/CONSTRUCTION TURNOVER/FINAL ACCEPTANCE	2	02/22/95	ALBERTIN	W. WAIS	NONE
CT 3.7.1	CRAFT SUPPORT CONTRACT MANAGEMENT	2	02/22/95	ALBERTIN	W. WAIS	NONE
CT 3.7.2	CRAFT SUPPORT CONTRACT SERVICES COORDINATION	2	02/22/95	ALBERTIN	W. WAIS	NONE
CT 3.7.3	CONSTRUCTION HEAVY EQUIPMENT AND MAJOR TOOL COORDINATION	2	02/22/95	ALBERTIN	W. WAIS	NONE
CT 3.7.4	LAYDOWN AREAS/TEMPORARY UTILITIES	2	02/22/95	ALBERTIN	W. WAIS	NONE
CT 3.8.3	LESSONS LEARNED	2	02/22/95	ALBERTIN	W. WAIS	NONE
CT 3.9.1	JURISDICTIONAL DISPUTES AND GRIEVANCES	2	02/22/95	ALBERTIN	W. WAIS	NONE
CT 4.1.1	DECONTAMINATION AND DEMOLITION WORK PACKAGE PREPARATION	2	02/22/95	ALBERTIN	W. WAIS	NONE
CT 4.2.1	ASBESTOS ABATEMENT	3	04/24/95	ALBERTIN	J. BOWERS	NONE
CT 4.2.2	DECONTAMINATION/DEMOLITION fIELD aCTIVITIES	2	02/22/95	ALBERTIN	W. WAIS	NONE
EMER. PREP. & MGMT.						
EM-0001	EQUIPMENT INVENTORY FOR EMERGENCY PREPAREDNESS	0	10/14/93	HINNEFELD		EA-EMP-001
EM-0002	DRILLS AND EXERCISES	0	04/20/94	HINNEFELD		EA-EMP-002
EM-0003	RE-ENTRY AND RECOVERY PROCEDURE	0	07/08/94	HINNEFELD		EA-EMP-003

000070

Doc#	Doc Title	Rev #	Eff Date	FAM	SE	Supersedes
EM-0004	PROTECTIVE ACTIONS	0	07/08/94	HINNEFELD		EA-EMP-004
EM-0005	EMERGENCY MONITORING TEAM PROCEDURE	0	09/20/94	HINNEFELD		EA-EMP-007
EM-0006	EMERGENCY PREPAREDNESS TRAINING PLAN FOR EMERGENCY OPERATIONS CENTER STAFF	0	12/27/94	HINNEFELD		EA-DPT-001
EM-0007	ACTIVATION OF EMERGENCY OPERATIONS CENTER	0	07/07/94	HINNEFELD		EA-DPT-002
EM-0008	NOTIFICATION OF NEXT OF KIN	0	04/18/94	HINNEFELD		EA-DPT-004
EM-0009	FLOW OF INFORMATION	0	04/18/94	HINNEFELD		EA-DPT-005
EM-0010	EVENT NOTIFICATION AND OCCURRENCE REPORTING	4	01/26/95	HINNEFELD	C.HOOD	ED--0001
EM-0013	NUCLEAR CRITICALITY ACCIDENT DOSE ASSESSMENT	0	04/20/87	HINNEFELD		ESH-P-01-008
EM-0014	NUCLEAR CRITICALITY ACCIDENT RESPONSE	0	07/02/93	HINNEFELD		IDP-RTP-001
EM-0015	SHIFTS ORDERS	0	09/20/91	HINNEFELD		SP-A-01-016
EM-0016	ROOT CAUSE ANALYSIS	0	08/27/91	HINNEFELD		SP-A-01-017
EM-0017	PERFORMING TYPE A, B, AND C INVESTIGATIONS	0	07/10/92	HINNEFELD		SSOP-0058
EM-0019	SITEWIDE LESSONS LEARNED	1	01/11/95	HINNEFELD	C. HOOD	SSOP-1075
EM-0020	BUILDING EMERGENCY PROCEDURE	4	09/27/94	HINNEFELD	S. DULEY	SSOP-0077
EM-0021	FERNALD ENVIRONMENTAL MANAGEMENT PROJECT (FEMP) OFFSITE EMERGENCY WARNING SYSTEM	3	10/18/94	HINNEFELD	S. DULEY	SSOP-0088
EM-0022	PERSONNEL ACCOUNTABILITY	1	02/16/94	HINNEFELD	R. P. SCHOLZ	SSOP-0089
EM-0023	BOMB THREAT PROCEDURE	1	08/01/94	HINNEFELD	S. DULEY	SSOP-1003
EM-0024	OFFSITE EMERGENCY PROCEDURE	0	06/23/93	HINNEFELD		SSOP-1007

Doc#	Doc Title	Rev #	Eff Date	FAM	SE	Supersedes
EM-0025	EVENT CATEGORIZATION/CLASSIFICATION PROCEDURE	1	06/03/94	HINNEFELD	G. CAMPBELL	SSOP-1018
ENGINEERING DESIGN						
ED-12-1001	ENGINEERING POLICY	0	09/02/94	HECK	F. JEBENS	NONE
ED-12-1002	PREPARATION AND CONTROL OF ENGINEERING PROCEDURES	0	06/10/94	HECK	F. JEBENS	NONE
ED-12-1003	ENGINEERING DIVISION GLOSSARY	0	09/23/94	HECK	F. JEBENS	NONE
ED-12-2002	CHARTERS AND RESPONSIBILITIES	1	03/15/95	HECK	F. JEBENS	NONE
ED-12-2003	ENGINEERING PERSONNEL MATRIXING	0	06/10/94	HECK	F. JEBENS	NONE
ED-12-2004	ENGINEERING DIVISION TRAINING	0	09/06/94	HECK	F. JEBENS	NONE
ED-12-2005	PROJECT A-E SUBCONTRACT SUPPORT MANAGEMENT	0	09/23/94	HECK	F. JEBENS	NONE
ED-12-2006	ENGINEERING ACQUISITIONS	0	09/26/94	HECK	F. JEBENS	NONE
ED-12-3001	ENGINEERING DESIGN INITIATION	0	09/23/94	HECK	F. JEBENS	NONE
ED-12-3002	COLLECTION, VERIFICATION, AND USE OF ENGINEERING DATA	0	09/30/94	HECK	F. JEBENS	NONE
ED-12-4001	FUNCTIONAL REQUIREMENTS DOCUMENT	0	09/16/94	HECK	R. WORSLEY	NONE
ED-12-4002	CONCEPTUAL DESIGN REPORT	0	09/21/94	HECK	R. WORSLEY	NONE
ED-12-4003	DESIGN CRITERIA PACKAGE	0	09/21/94	HECK	R. WORSLEY	NONE
ED-12-4004	DESIGN PACKAGE	0	09/16/94	HECK	R. WORSLEY	NONE
ED-12-4005	CALCULATIONS PERPARATION AND REVIEW PROCESS	0	09/06/94	HECK	R. WORSLEY	NONE
ED-12-4006	SPECIFICATION PREPARATION AND ISSUE	0	09/06/94	HECK	R. WORSLEY	NONE
ED-12-4007	DRAWING PREPARATION	0	09/16/94	HECK	R. WORSLEY	NONE
ED-12-4008	INDEPENDENT DESIGN REVIEWS	0	09/16/94	HECK	R. WORSLEY	NONE

000072

Doc#	Doc Title	Rev #	Eff Date	FAM	SE	Supersedes
ED-12-4009	PROCESS FLOW DIAGRAM PREPARATION AND ISSUE	0	09/06/94	HECK	R. WORSLEY	NONE
ED-12-4010	DESIGN VERIFICATION	1	03/28/95	HECK	C. BECKETT	NONE
ED-12-4011	SUBCONTRACTOR SUBMITTALS	0	09/06/94	HECK	R. WORSLEY	NONE
ED-12-4012	MAINTENANCE ENGINEERING PROJECTS	0	09/19/94	HECK	R. WORSLEY	NONE
ED-12-4013	ENGINEERING CHANGE NOTICES (ECN)	0	11/02/94	HECK	S. REUTCKE	NONE
ED-12-5001	ENGINEERING DOCUMENT CONTROL	0	09/30/94	HECK	F. JEBENS	NONE
ED-12-6001	ENGINEERING RESPONSE TO FIELD CHANGE REQUESTS (FCRs)	1	10/06/94	HECK	F. JEBENS	NONE
ED-12-6002	ENGINEERING PROCESSING OF AS-BUILT DRAWINGS	0	09/06/94	HECK	F. JEBENS	NONE
ED-12-6003	STARTUP AND SYSTEMS OPERABILITY TESTING	0	06/10/94	HECK	S. REUTCKE	NONE
ED-12-6004	ENGINEERING RESPONSE TO REQUESTS FOR CLAFIFICATION (RCI)	0	06/10/94	HECK	F. JEBENS	NONE
ED-12-7001	ENGINEERING INTERFACES	0	09/30/94	HECK	E. HOPSON	NONE
ED-12-7002	REQUEST FOR ENGINEERING SERVICES	0	09/16/94	HECK	R. WORSLEY	NONE
ED-12-8001	DESIGN ACTIVITY CLOSE-OUT	0	09/21/94	HECK	F. JEBENS	NONE
ED-12-9001	ENGINEERING QUALITY MANAGEMENT	0	09/30/94	HECK	S. REUTCKE	NONE
ED-12-9002	VALUE ENGINEERING PROCESS	0	09/06/94	HECK	F. JEBENS	NONE
ED-12-9003	ENGINEERING DIVISION SELF-ASSESSMENT PROGRAMS	0	09/06/94	HECK	S. REUTCKE	NONE
ED-12-9004	ENGINEERING PROJECT CLOSEOUT	0	09/21/94	HECK	F. JEBENS	NONE
ED-12-9005	CONFIGURATION MANAGEMENT FUNCTIONAL AREA ASSESSMENT	0	09/21/94	HECK	S. REUTCKE	NONE

ENVIR. REST. & WASTE MGMT.

EW-0001	INITIATING WASTE CHARACTERIZATION ACTIVITIES USING THE MATERIAL EVALUATION FORM (MEF)	5	02/13/95	HAGEN	S. MCCROTTY	SSOP-0002

000073

6989

Doc#	Doc Title	Rev #	Eff Date	FAM	SE	Supersedes
EW-0002	PROCESSING THE SITE-WIDE ANALYSIS REQUEST/CUSTODY RECORD FOR SAMLE CONTROL	3	02/14/94	HAGEN	W. KELLY	SSOP-0018
EW-0003	NUCLEAR MATERIALS DISPOSITION ORDER MANAGEMENT	1	06/10/94	HAGEN	S. KAUSHIVA	SSOP-0034
EW-0004	SATELLITE ACCUMULATION AREAS FOR HAZARDOUS WASTES	4	03/24/95	HAGEN	R. ENNEKING	SSOP-0035
EW-0005	HANDLING CONTAINERS OF UNIDENTIFIED MATERIAL	0	09/30/92	HAGEN	K. MURRIN	SSOP-0039
EW-0006	MANAGEMENT OF EXCESS SOIL, DEBRIS, AND WASTE FROM A PROJECT	1	01/31/94	HAGEN	T. WEESE	SSOP-0044
EW-0007	CONTACT WITH REGULATORY AGENCIES	1	01/05/95	HAGEN	S. BECKMAN	SSOP-0048
EW-0008	ESTABLISHMENT AND MAINTENANCE OF FEMP ADMINISTRATIVE RECORD	0	06/26/92	HAGEN	G. WALTERS	SSOP-0055
EW-0009	CONTROL AND TRACKING OF CHEMICAL SUBSTANCES	0	05/26/92	HAGEN	J. OGG	SSOP-0059
EW-0010	FEMP DATA VALIDATION PROCEDURE	1	03/07/94	HAGEN	V. GILL	SSOP-1004
EW-0011	REQUESTING AND COMPLETING SITE MEDIA SAMPLING SUPPORT FOR IN SITU AND EX SITU MEDIA CHARACTERIZATION AND EVALUATION	0	06/30/94	HAGEN	L. LOVE	SSOP-1024
EW-0012	TANK/SUMP CONTENTS REMOVAL	0	06/09/94	HAGEN	J. OGG	SSOP-1025
EW-0013	TANK/SUMP REMOVAL OR ABANDONMENT	0	06/09/94	HAGEN	J. OGG	SSOP-1026
EW-0014	MANAGING PCBS AND PCB ITEMS	0	03/08/94	HAGEN	S. KASTER	SSOP-1027
EW-0015	FEMP RCRA OPERATING RECORD	0	04/12/94	HAGEN	C. SCOTT	SSOP-1064
EW-0016	SUBMITTAL OF DOCUMENTS TO THE ADMINISTRATIVE RECORD	0	09/14/94	HAGEN	H. RICHARDSON	SSOP-1083
EW-0017	MANAGEMENT OF HAZARDOUS WASTE	0	07/28/89	HAGEN	S. COYLE	FMPC-0519
EW-0018	MANAGEMENT OF LOW-LEVEL WASTE	0	12/26/90	HAGEN	L. ALLMON	PP-FMPC-5010

000074

Doc#	Doc Title	Rev #	Eff Date	FAM	SE	Supersedes
EW-0019	NUCLEAR MATERIALS DISPOSITION ORDER MANAGEMENT SYSTEM	0	10/29/91	HAGEN	D. DUNAWAY	PP-5031
EW-1000	CRU OPERATING PROCEDURES	0	02/03/95	HAGEN	L. SEXTON	NONE
EW-1001	CRU OPERATING PROCEDURE PROJECT MANAGEMENT	0	02/03/95	HAGEN	L. SEXTON	NONE
EW-1002	CRU OPERATING PROCEDURES PROJECT ADMINISTRATION	0	02/03/95	HAGEN	L. SEXTON	NONE
EW-1003	CRU OPERATING PROCEDURES ENVIRONMENTAL	0	02/03/95	HAGEN	L. SEXTON	NONE
EW-1004	CRU OPERATING PROCEDURES ENGINEERING	0	02/03/95	HAGEN	L. SEXTON	NONE
EW-1005	CRU OPERATING PROCEDURES ACQUISITIONS AND CONTRACTS	0	02/03/95	HAGEN	L. SEXTON	NONE
EW-1006	CRU OPERATING PROCEDURES CONSTRUCTION	0	02/03/95	HAGEN	L. SEXTON	NONE
EW-1007	CRU OPERATING PROCEDURES REMEDIATION SUPPORT OPERATIONS	0	02/03/95	HAGEN	L. SEXTON	NONE
EW-1008	CRU OPERATING PROCEDURES PROJECT CONTROLS	0	02/03/95	HAGEN	L. SEXTON	NONE
EW-1009	CRU OPERATING PROCEDURES HEALTH AND SAFETY	0	02/03/95	HAGEN	L. SEXTON	NONE
EW-1010	CRU OPERATING PROCEDURES QUALITY PROGRAMS	0	02/03/95	HAGEN	L. SEXTON	NONE
EW-1011	CRU OPERATING PROCEDURES REGULATORY PROGRAMS	0	02/03/95	HAGEN	L. SEXTON	NONE
EW-1012	CRU OPERATING PROCEDURES PUBLIC AFFAIRS	0	02/03/95	HAGEN	L. SEXTON	NONE
EW-1013	CRU OPERATING PROCEDURES WASTE MANAGEMENT	0	02/03/95	HAGEN	L. SEXTON	NONE

ENVIRONMENTAL PROTECTION

EP-0001	NATIONAL ENVIRONMENTAL POLICY ACT (NEPA) DOCUMENT PROCESS	2	12/21/93	HAGEN	J. HOMER	SSOP-0031
EP-0002	REVIEWING THE FERNALD SITE ENVIRONMENTAL MONITORING PROGRAM	0	11/06/92	HAGEN	A. SNYDER	SSOP-0076
EP-0003	UNEXPECTED DISCOVERY OF CULTURAL RESOURCES	1	02/10/95	HAGEN	J. HOMER	SSOP-1070

Doc#	Doc Title	Rev #	Eff Date	FAM	SE	Supersedes
EP-0004	SPILL INCIDENT REPORTING AND CLEAN-UP	1	03/17/94	HAGEN	D. PONKE	SSOP-0067
FINANCIAL MANAGEMENT						
FM-0002	COOPERATION WITH INSPECTOR GENERAL	0	04/01/95	LEE	P. CALDWELL	NONE
FM-0004	MONTH-END CLOSING PROCEDURE	0	04/01/95	LEE	W. GALE	NONE
FM-0005	TIME SHEET PROCEDURE	0	04/05/95	LEE	P. TAYLOR	NONE
FM-0006	EXPENSE REPORT PROCEDURE	0	04/01/95	LEE	P. TAYLOR	NONE
HUMAN RESOURCES						
HR-100	POLICY APPROVALS	0	03/15/93	ZOBRIST		NONE
HR-101	OPEN DOOR POLICY	0	03/15/93	ZOBRIST		NONE
HR-102	EMPLOYMENT OF SALARIED PERSONNEL	1	02/24/95	ZOBRIST		NONE
HR-103	EMPLOYMENT OF RELATIVES AND MINIMUM HIRING AGE	0	03/15/95	ZOBRIST		NONE
HR-104	NEW ARRIVAL ORIENTATION PROGRAM	0	02/24/95	ZOBRIST		NONE
HR-105	PROMOTION AND TRANSFER OF SALARIED EMPLOYEES	3	03/24/95	ZOBRIST	R. SULLIVAN	NONE
HR-106	TERMINATION OF SALARIED EMPLOYEES	0	07/19/93	ZOBRIST		NONE
HR-108	DEATH OF AN EMPLOYEE OR RETIREE	1	03/24/95	ZOBRIST	P. EDWARDS	NONE
HR-109	JOB OPPORTUNITY LISTINGS	3	02/24/95	ZOBRIST		NONE
HR-126	BUSINESS TRAVEL	1	08/26/94	ZOBRIST		NONE
HR-127	PERMANENT RELOCATION	1	08/26/94	ZOBRIST		NONE
HR-128	TEMPORARY ASSIGNMENT	1	08/26/94	ZOBRIST		NONE
HR-134	MATRIX POLICY	0	02/28/95	ZOBRIST	P. EDWARDS	NONE

000076

Doc#	Doc Title	Rev #	Eff Date	FAM	SE	Supersedes
HR-135	SALARIED EMPLOYEE'S WORKHOUR GUIDELINES	2	04/22/94	ZOBRIST		NONE
HR-140	NATURAL, CIVIL OR OTHER EMERGENCIES	3	02/24/95	ZOBRIST		NONE
HR-141	ABSENCE FROM WORK OR WORK STATIONS	0	05/21/93	ZOBRIST		NONE
HR-143	SMOKING IN THE WORKPLACE	0	06/01/93	ZOBRIST		NONE
HR-144	SUBSTANCE ABUSE PROGRAM	0	09/01/94	ZOBRIST		NONE
HR-145	RULES OF CONDUCT	0	11/15/93	ZOBRIST		NONE
HR-146	EQUAL EMPLOYMENT OPPORTUNITY/AFFIRMATIVE ACTION	0	11/01/93	ZOBRIST		NONE
HR-147	SEXUAL HARASSMENT	0	05/13/93	ZOBRIST		NONE
HR-148	BUSINESS ETHICS AND CONDUCT POLICY	2	05/20/94	ZOBRIST		NONE
HR-150	SERVICE AWARDS AND SERVICE PINS	1	02/28/95	ZOBRIST	Y. VANBIBBER	NONE
HR-152	PROFESSIONAL REGISTRATION AND MEMBERSHIPS	1	01/20/95	ZOBRIST		NONE
HR-154	EMPLOYEE INVENTIONS	0	07/22/94	ZOBRIST		NONE
HR-155	THE FLUOR FOUNDATIONS MATCHING GIFT PROGRAM	0	03/15/93	ZOBRIST		NONE
HR-161	COOPERATIVE EDUCATION AND TRAINING PROGRAM	0	06/08/93	ZOBRIST		NONE
HR-162	SOLICITATION ON COMPANY PROPERTY	0	04/22/94	ZOBRIST		NONE
HR-163	PROPER ATTIRE IN THE WORKPLACE	1	08/26/94	ZOBRIST		NONE
HR-171	COURT SUMMONS	0	04/15/93	ZOBRIST		NONE
HR-200	SALARY ADMINISTRATION	1	07/23/93	ZOBRIST		NONE
HR-201	PERFORMANCE ASSESSMENT/IMPROVEMENT PLAN	1	02/24/95	ZOBRIST		NONE

Doc#	Doc Title	Rev #	Eff Date	FAM	SE	Supersedes
HR-202	EMPLOYEE CLASSIFICATION AND ELIGIBILITY FOR BENEFITS	2	01/20/95	ZOBRIST		NONE
HR-203	OVERTIME COMPENSATION FOR SALARIED EMPLOYEES	3	04/01/95	ZOBRIST	R. SULLIVAN	NONE
HR-204	DISTRIBUTION OF PAYCHECKS	1	04/15/94	ZOBRIST		NONE
HR-205	SHIFT DIFFERENTIAL AND PREMIUM PAY FOR SALARIED EMPLOYEES	2	09/09/94	ZOBRIST		NONE
HR-300	HOLIDAYS	3	08/26/94	ZOBRIST		NONE
HR-301	VACATION FOR SALARIED EMPLOYEES	3	01/06/95	ZOBRIST		NONE
HR-302	JURY OR WITNESS DUTY	1	07/23/93	ZOBRIST		NONE
HR-303	MILITARY DUTY	1	04/15/94	ZOBRIST		NONE
HR-304	SHORT TERM MEDICAL LEAVE - SALARIED EMPLOYEES	1	05/21/94	ZOBRIST		NONE
HR-305	TIME OFF TO VOTE	0	04/16/93	ZOBRIST		NONE
HR-310	EMPLOYEE SERVICE DATES	1	04/15/94	ZOBRIST		NONE
HR-311	LEAVE OF ABSENCE - UNPAID	2	02/28/95	ZOBRIST	D. GILL	NONE
HR-312	SALARIED EMPLOYEE ABSENCE - PAID	4	04/01/95	ZOBRIST	D. GILL	NONE
HR-320	RETIREMENT FOR SALARIED EMPLOYEES	1	12/09/94	ZOBRIST		NONE
HR-329	EMPLOYEE ASSISTANE PROGRAM	1	07/23/94	ZOBRIST		NONE
HR-331	EDUCATIONAL LOAN PROGRAM FOR EMPLOYEE'S CHILDREN	0	01/20/95	ZOBRIST		NONE
HR-335	FLUOR FOUNDATION SCHOLARSHIP PROGRAM	0	06/08/93	ZOBRIST		NONE
HR-620	EDUCATIONAL ASSISTANCE	2	10/09/93	ZOBRIST		NONE
MAINTENANCE						
MT-0001	MEASURING AND TEST EQUIPMENT CALIBRATION AND CONTROL	2	01/12/90	PAINE	S. DECHTER	FMPC-0718

000078

	Doc#	Doc Title	Rev #	Eff Date	FAM	SE	Supersedes
	MT-0002	WELDING PROGRAM	0	05/01/88	PAINE	B. ROMINE	FMPC-2092
	MT-0003	FEMP WORK REQUEST/ORDER PROCEDURE	0	09/17/92	PAINE	A. MILLER	SSOP-0061
MANAGEMENT SYSTEMS							
	MS-0001	MAINTAINING THE MANAGEMENT PLAN; THE FERMCO POLICIES AND REQUIREMENTS MANUAL	0	04/05/94	GATES	C. SOLOMON	SSOP-1071
	MS-0002	RECORDS MANAGEMENT	0	03/05/93	GATES	G. WALTERS	SSOP-0609
	MS-0003	DOCUMENT FILING SYSTEM	0	11/30/93	GATES	B. HAWLEY	SSOP-0096
	MS-0004	AWARD FEE PROCEDURE	0	11/15/93	GATES	D. WALKER	SSOP-1054
	MS-0005	FINANCIAL ACCOUNTABILITY PROCEDURE	0	10/01/93	GATES	D. DOUGHERTY	SSOP-1041
	MS-0006	MAINTENANCE OF STANDARDS/REQUIREMENT IDENTIFICATION DOCUMENT (SRID)	1	01/19/95	GATES	J. RITCHIE	SSOP-1017
	MS-1001	FERMCO SITE PROCEDURE SYSTEM	0	02/01/95	GATES	V. TAYLOR	SSOP-0103
	MS-1002	CONTROL OF PLANS AND INTERNAL REQUIREMENTS DOCUMENTS	0	04/01/95	GATES	C. SOLOMON	SSOP-0103
NUCLEAR & SYSTEMS SAFETY							
	NS-0001	CRITICALITY SAFETY ANALYSIS AND APPROVAL PROCESS	1	01/18/95	HINNEFELD	R. MARBLE	SSOP-0095
	NS-0002	UNREVIEWED SAFETY QUESTION (USQ) DETERMINATION AND SAFETY EVALUATION SYSTEM	0	02/01/94	HINNEFELD	R. KLINE	SSOP-1035
OCCUPATIONAL SAFETY & HEALTH							
	SH-0001	THE DEVELOPMENT OF PROJECT SPECIFIC HEALTH AND SAFETY PLANS	0	01/31/95	HINNEFELD		SSOP-1093
	SH-0002	ACCIDENT/ILLNESS REPORTING AND INVESTIGATION	0	04/15/95	HINNEFELD		SPR 1-8
	SH-0003	JOB SAFETY ANALYSIS (JSA)	0	04/15/95	HINNEFELD		SPR 2-7

620000

6869

Doc#	Doc Title	Rev #	Eff Date	FAM	SE	Supersedes
SH-0004	WORK PERMITS/RADIOLOGICAL WORK PERMITS	0	04/15/95	HINNEFELD		SPR 2-8 RCR 3-2
SH-0005	BARRICADES	0	04/15/95	HINNEFELD		SPR 3-5
SH-0006	PORTABLE LADDER USE, INSPECTION, AND CONTROL	0	04/15/95	HINNEFELD		SPR 3-6
SH-0007	GROUND-FAULT CIRCUIT INTERRUPTERS (CFI)	0	04/15/95	HINNEFELD		SPR 5-3
SH-0008	EXCAVATIONS AND TRENCHES	0	04/15/95	HINNEFELD		SPR 9-4
SH-0009	EYE WASHES AND SAFETY SHOWERS	0	04/15/95	HINNEFELD		SPR 12-11
OPERATIONS						
OP-0001	QUALIFICATION OF NEPA FILTRATION SYSTEM TEST PERSONNEL	1	04/07/94	PAINE	R. PALMER	SSOP-0011
OP-0002	CONTROLLING PORTABLE HEPA FILTRATION DEVICES (HFDs)	1	06/02/94	PAINE	D. GRIFFITH	SSOP-0028
OP-0003	CONTROL OF PROCESSES	0	03/17/93	PAINE	T. HUEY	SSOP-0716
OP-0004	FERMCO LOCKOUT/TAGOUT (HAZARDOUS ENERGY AND MATERIAL CONTROL) PROCEDURE	2	03/20/95	PAINE	R. MAURER	SSOP-0719
OP-0005	DISPOSITION OF SAFE SHUTDOWN EXCESS PERSONAL PROPERTY	0	10/15/93	PAINE	L. RATHGENS	SSOP-1021
OP-0008	ROOF/ELEVATED STRUCTURE ACCESS	0	07/26/94	PAINE	J. CULLEN	46-C-908
OP-0009	OPERATING MOTOR VEHICLES	0	06/24/94	PAINE	D. GILBERT	50-C-117
OP-0101	TESTING FERMCO COMMERCIAL MOTOR VEHICLE DRIVERS FOR THE USE OF CONTROLLED SUBSTANCES AND ALCOHOL	0	04/28/95	PAINE	A. BALLINGER	NONE
OP-0102	FACILITY SAFETY ASSESSMENT PROGRAM (FSAP)	0	04/10/95	PAINE	M. BECRAFT	NONE
OP-0104	FERMCO MOTOR CARRIER PROGRAM	0	04/28/95	PAINE	J. CULLEN	NONE

000080

PACKAGING & TRANSPORTATION

Doc#	Doc Title	Rev #	Eff Date	FAM	SE	Supersedes
PT-0001	RECEIVING, ON-SITE MOVEMENT AND OFF-SITE SHIPMENT OF NONRADIOACTIVE HAZARDOUS MATERIAL	1	04/30/92	WEST	C. STAPLETON	SSOP-0003
PT-0002	PREPARING AND TRANSFERRING UNCHARACTERIZED WASTE TO THE CONTROLLED HOLDING AREA	1	01/13/92	WEST	J. CARR	SSOP-0008
PT-0003	CONTROL AND MOVEMENT OF CONTAINERS AT THE FEMP	0	03/28/95	WEST	M. HARPER	SSOP-0027
PT-0004	PACKAGING AND LOADING RADIOACTIVE MATRIAL FOR OFFSITE SHIPMENT	4	06/18/93	WEST	J. OGG	SSOP-0060
PT-0005	PACKAGING LOW-LEVEL RADIOACTIVE WASTE (LLRW) IN DRUMS FOR SHIPMENT TO THE NEVADA TEST SITE	2	03/30/95	WEST	R. GIESSL	SSOP-0075
PT-0006	PACKAGING LOW LEVEL RADIOACTIVE WASTE (LLRW) IN ISO CONTAINERS FOR OFFSITE SHIPMENT TO THE NEVADA TEST SITE	2	03/30/95	WEST	R. GIESSL	SSOP-0078
PT-0007	PACKAGING LOW-LEVEL RADIOACTIVE WASTE (LLRW) IN METAL BOXES FOR SHIPMENT TO NTS OR DOE-NV	2	03/30/95	WEST	L. HURST	SSOP-0024
PT-0008	PACKAGING ON-SITE MOVEMENT AND OFF-SITE SHIPMENT OF MATERIAL	0	12/20/91	WEST	J. MCGROGAN	PP-0314
PT-0009	CONTAMINATED TRASH DUMPSTERS	2	05/01/95	WEST	D. MORRIS	20-C-604
PT-0010	COLLECTION AND DISPOSAL OF CONTROLLED AREA OFFICE TRASH	0	03/15/94	WEST	C. MENCHE	20-C-617
PT-0011	EVALUATING LOW-LEVEL RADIOACTIVE WASTE (LLRW) BULK WASTE STREAMS FOR SHIPMENT	1	02/04/94	WEST	N. WEICHOLD	20-C-625
PT-0012	SHIPMENT OF LOW-LEVEL RADIOACTIVE WASTE REQUIREMENTS	0	02/28/92	WEST	J. MCGROGAN	PO-D-035

PROJECT CONTROL

PCS-001	WORK DEFINITION	2	08/01/94	GATES		NONE
PCS-002	COST ESTIMATING	2	08/01/94	GATES		NONE

000081

6989

	Doc#	Doc Title	Rev #	Eff Date	FAM	SE	Supersedes
	PCS-003	PLANNING & SCHEDULING	2	08/01/94	GATES		NONE
	PCS-005	CONTROL ACCOUNT AUTHORIZATION	2	08/01/94	GATES		NONE
	PCS-006	FUNDS MANAGEMENT	3	12/27/94	GATES		NONE
	PCS-007	FINANCIAL OBLIGATION MANAGEMENT	2	08/01/94	GATES		NONE
	PCS-008	WORK AUTHORIZATION	2	08/01/94	GATES		NONE
	PCS-009	PERFORMANCE MEASUREMENT AND REPORTING	2	08/01/94	GATES		NONE
	PCS-010	SUBCONTRACT & MATERIALS PERFORMANCE MEASUREMENT	2	08/01/94	GATES		NONE
	PCS-011	PREPARING AND INCORPORATING CHANGES TO THE PERFORMANCE MEASUREMENT BASELINE	2	08/01/94	GATES		NONE
	PCS-012	CHANGE CONTROL PROCEDURE	0	01/27/94	GATES		SSOP-5030
PROPERTY MANAGEMENT							
	PM-0001	MANAGEMENT OF GOVERNMENT PROPERTY	7	03/24/95	CRUCE	R. BURCH	SSOP-1044
	PM-0002	MISCELLANEOUS SHIPPING ORDER PREPARATION	1	03/31/95	CRUCE	J. ALLEN	SSOP-1087
PUBLIC INVOLVEMENT							
	PI-0001	RELEASE OF INFORMATION TO THE PUBLIC CONCERNING EMERGENCY AND NON-ROUTINE EVENTS	0	07/20/92	HOOPES	R. WALKER	SSOP-0057
	PI-0002	VISITOR TOUR ACCESS	0	09/16/93	HOOPES	J. JACKSON	SSOP-0099
	PI-0003	RELEASE OF INFORMATION TO THE PUBLIC CONCERNING NON-EMERGENCY EVENTS	0	05/13/94	HOOPES	J. HOOPES	SSOP-1001
	PI-0004	RESPONSE TO PUBLIC INFORMATION REQUESTS	0	07/08/94	HOOPES	J. HOOPES	SSOP-1002
	PI-0005	PREPARATION AND RELEASE OF TECHNICAL PAPERS FOR CONFERNCE PROCEEDINGS	0	07/29/94	HOOPES	R. CLARK	SSOP-1077

000082

	Doc#	Doc Title	Rev #	Eff Date	FAM	SE	Supersedes
QUALITY ASSURANCE							
	QA-0001	PROCESSING DEVIATION AND CORRECTIVE ACTION REPORTS	5	02/16/95	KLINE	L. LOCKERD	SSOP-0023
	QA-0002	QUALITY ASSURANCE PROJECT PLANS	0	11/14/91	KLINE	K. MERRIMAN	SSOP-0036
	QA-0003	IDENTIFYING QUALITY ASSURANCE PROGRAM REQUIREMENTS FOR QUALITY (RISK) LEVELS	1	10/28/93	KLINE	D. PONKE	SSOP-0045
	QA-0004	FEMP QUALITY ASSURANCE AUDIT PROGRAM	1	10/18/93	KLINR	D. PONKE	SSOP-0049
	QA-0005	INSPECTION OF PROCURED MATERIAL, EQUIPMENT, WORK IN PROCESS AND COMPLETED ITEMS	0	08/31/92	KLINE	D. PONKE	SSOP-0068
	QA-0006	QUALITY IMPROVEMENT	0	10/30/92	KLINE	D. LAMBERT	SSOP-0082
	QA-0007	CONDUCT OF INDEPENDENT SURVEILLANCE ACTIVITY	0	07/30/93	KLINE	D. PONKE	SSOP-0709
	QA-0008	QUALITY ASSURANCE STOP WORK AUTHORITY	0	03/28/94	KLINE	D. PONKE	SSOP-1019
	QA-0009	QUALITY ASSURANCE PLANS	0	11/14/91	KLINE	K. MERRIMAN	PP-0710
	QA-0010	THE FERMCO EXTERNAL AUDIT & APPRAISAL MANAGEMENT SYSTEM	0	03/01/94	KLINE	L. LOCKERD	SSOP-1068
	QA-0014	MANAGEMENT ASSESSMENT	0	03/31/95	KLINE	N. ALHADEFF	NONE
RADIOLOGICAL PROTECTION							
	RP-0001	RADIOACTIVE SOURCE INTEGRITY TESTING AND CONTROL	1	06/27/94	HINNEFELD		RS-DPT-010
	RP-0002	RESPONSE AND NOTIFICATION REQUIREMENTS INVOLVING THE LOSS OR THEFT OF RADIOACTIVE MATERIAL	0	02/23/94	HINNEFELD		RC-DPT-013
	RP-0003	PERFORMING PERSONNEL MONITORING	1	10/14/94	HINNEFELD		SSOP-0086
	RP-0004	PREGNANCY REPORTING AND EMBRYO/FETUS RADIOLOGICAL PROTECTION	0	06/21/93	HINNEFELD		SSOP-1009
	RP-0005	RESTRICTIONS FOR WORKERS CONTAMINATED WITH RADIOPHARMACEUTICALS	0	07/27/93	HINNEFELD		SSOP-1012

000083

6989

Doc#	Doc Title	Rev #	Eff Date	FAM	SE	Supersedes
RP-0006	RADIOLOGICAL DEFICIENCY REPORTING AND RELATED DISCIPLINARY ACTION PROCESS	0	03/31/94	HINNEFELD		SSOP-1036
RP-0007	POSTING REQUIREMENTS	1	03/17/95	HINNEFELD		RCR 4-2
RP-0008	CONTAMINATED TOOL CRIBS	0	04/06/94	HINNEFELD		RC-DPT-016
RP-0009	RELEASE OF MATERIALS FROM THE FERNALD ENVIRONMENTAL MANAGEMENT PROJECT (FEMP)	0	06/27/94	HINNEFELD		RD-DPT-019
RP-0010	IDENTIFICATION AND MOVEMENT OF RADIOACTIVE MATERIAL	1	05/12/93	HINNEFELD		SP-P-35-027 SP-P-35-050
RP-0011	PLANNED SPECIAL EXPOSURE ADMINISTRATION	0	03/30/95	HINNEFELD	A. BAKER	NONE
RP-0012	RESPONDING TO STACK MONITORING ALARMS	0	02/17/95	HINNEFELD	C. TORNES	SSOP-1094
SAFEGUARDS & SECURITY						
SE-0001	ACCESS TO THE FEMP	1	01/31/95	ZOBRIST	J. MERWIN	SSOP-1079
SE-0002	FOREIGN TRAVEL	0	07/27/93	ZOBRIST	P. TAYLOR	SSOP-0066
TRAINING & QUALIFICATION						
TR-0001	EXEMPTION FROM INITIAL TRAINING	1	02/22/94	ZOBRIST	J. MERWIN	SSOP-0013
TR-0002	CONDUCTING A JOB AND TASK ANALYSIS	0	02/17/94	ZOBRIST	J. MERWIN	SSOP-1063
TR-0003	INSTRUCTOR QUALIFICATION	0	02/28/94	ZOBRIST	J. MERWIN	SSOP-1069
TR-0004	FERNALD SITEWIDE TRAINING PROCEDURE	0	12/16/94	ZOBRIST	J. MERWIN	SSOP-1072

000084

SECTION 2

MANUALS

000085

6869

MANUALS

FUNCTIONAL AREA	DOCUMENT.NO	TITLE	REV. NO.	EFFECTIVE DATE	FAM	SE	SUPERSEDES
	SM-0001	RISK ASSESSMENT AND MANAGEMENT (RAM) SYSTEM MANUAL	0	01/25/92	HAGEN	WERNER	IN-6035 IN-6036
	RM-FMPC-0001	FMPC GENERAL DESIGN CRITERIA MANUAL	0	09/28/90	HECK	SIMI	FMPC-2069
	SR-0002	LARGE PROJECT ASBESTOS WORK PRACTICES	0	06/28/93	HOUSER	TASHJIAN	NONE
	RM-0002	TRAINING DEPARTMENT PROGRAM MANUAL	0	01/19/94	ZOBRIST	MERWIN	RM-FMPC-0002
	RM-0003	UNCLASSIFIED COMPUTER SECURITY PROGRAM MANUAL	0	10/09/91	FRASER	GIBSON	IN-RM-FMPC-0003
	RM-0004	TECHNICAL SUPPORT STAFF SELECTION, TRAINING, AND QUALIFICATION PROGRAM	0	02/07/92	ZOBRIST	NAGEL	NONE
	RM-0005	FEMP LOT MARKING AND COLOR CODING SYSTEM	6	03/17/95	CRUCE	DUNAWAY	FMPC-2178
	RM-0007	FEMP RESPIRATORY PROTECTION REQUIREMENTS MANUAL	1	10/14/94	HINNEFELD	MENGEL	FMPC-2152
	SR-0008	FEMP BASELINE SUMMARY	1	12/13/93	CLAUSS	KAUFMAN	NONE
	SR-0009	FEMP BASELINE BOOKS	1	12/13/93	CLAUSS	KAUFMAN	NONE
	SR-0010	FEMP ESTIMATING BOOKS	1	12/13/93	CLAUSS	KAUFMAN	NONE
	RM-0011	CONTROL OF OCCUPATIONAL EXPOSURE OF BLOODBORNE PATHOGENS	2	01/13/95	HINNEFELD	CHRISTIANSEN	NONE
	RM-0012	QUALITY ASSURANCE PROGRAM DESCRIPTION	3	11/30/94	ABERNATHY	TURNER	PL-3014
	RM-0013	FIRE PROTECTION REQUIREMENTS MANUAL	0	10/27/92	HINNEFELD	CONNELL	
	RM-0015	FEMP ALARA PROGRAM MANUAL	0	01/31/94	HINNEFELD	SCHILLING	NONE
	RM-0016	MANAGEMENT PLAN FERMCO POLICIES AND REQUIREMENTS MANUAL	5	05/01/95	GATES	SOLOMON	NONE
	RM-0025	FERMCO OPERATIONAL READINESS MANUAL	2	11/18/94	GATES	KILBERG	SM-0005
	RM-0026	ESTABLISHMENT & MANAGEMENT OF RADIOACTIVE MATERIAL MANAGEMENT AREAS	0	10/13/93	HINNEFELD	WELLS	SR-0004
	RM-0027	NUCLEAR CRITICALITY SAFETY REQUIREMENTS	1	10/14/94	HAGEN	BROWN	SR-2117
	RM-0028	FERMCO PROJECT CONTROL SYSTEM APPLICATION GUIDE	1	08/12/94	CLAUSS	LESTER	OM-2136
	RM-0031	ASBESTOS OPERATIONS AND MAINTENANCE WORK PRACTICES	0	08/01/92	HINNEFELD	MCCULLOUGH	OM-0005
	FMPC-2070	STYLE AND FORMAT GUIDE FOR SCIENTIFIC AND TECHNICAL REPORTS AND PAPERS	1	06/01/90	GATES	BECKMAN	NONE
	RM-2086	CHEMICAL HAZARD COMMUNICATION PROGRAM	0	07/10/92	HINNEFELD	KRUCHAN	NONE
	FMPC-2092	FMPC WELDING PROGRAM	0	05/01/88	PAINE	ROMINE	NONE
	RM-2116	SAFETY ANALYSIS PROGRAM REQUIREMENTS	0	02/21/95	HAGEN		FMPC-2116
	FMPC-2176	OPERATIONAL SAFETY REQUIREMENTS FOR THE REMOVAL AND OVERPACKING PROGRAM FOR THE 212 CONTAINERS OF	0	12/01/89	HINNEFELD	FARMER	NONE

MANUALS

FUNCTIONAL AREA	DOCUMENT NO.	TITLE	REV NO.	EFFECTIVE DATE	FAM	SE	SUPERSEDES
		THORIUM METALS					
	RM-3001	LABORATORY CHEMICAL HYGIENE MANUAL	0	01/26/95	HINNEFELD	SANDFOSS	PL-FMPC-3001
	IM-6001	SAFE SHUTDOWN PROGRAM PLANNING AND IMPLEMENTATION MANUAL	2	02/06/95	PAINE	PETERS	NONE
	IM-6005	BASELINE REFERENCE MANUAL	0	09/27/93	CLAUSS	KAUFMAN	NONE
	IM-6006	ESTIMATING REFERENCE MANUAL	1	12/13/93	CLAUSS	KAUFMAN	NONE
	IM-6008	TECHNICAL SITE INFORMATION	0	09/30/93	HOUSER	MCCLAMROCH	NONE
	IM-6010	DEFENSE NUCLEAR FACILITIES SAFETY BOARD (DNFSB)	0	01/12/94	GATES	WADE	NONE
	IM-6011	DATA QUALITY OBJECTIVES	0	01/31/94	ABERNATHY	DAVIS	NONE
	IM-6016	FEMP ASBESTOS CONTROL PROGRAM	0	10/24/94	HECK	TASHJIAN	NONE
	IM-6018	HUMAN RESOURCES POLICY AND PROCEDURES MANUAL	7	01/20/95	ZOBRIST	SULLIVAN	NONE
	IM-6020	FEMP NUCLEAR CRITICALITY SAFETY GUIDE	0	09/01/93	HAGEN	BROWN	FEMP-2304
	IM-7001	DECONTAMINATION MANUAL	1	12/27/93	HINNEFELD	ALLEN	NONE
	IM-7004	FEMP LOT MARKING AND COLOR CODING SYSTEM POCKETBOOK VERSION		03/22/95	PHILLIPS	DUNAWAY	NONE
	IM-7006	INCIDENT BUILDING EVACUATION MANUAL	3	03/08/95	HINNEFELD	DULEY	NONE

000087

SECTION 3

PLANS

PLANS

FUNCTIONAL AREA	DOCUMENT NO.	TITLE	REV. NO.	EFFECTIVE DATE	FAM	SE	SUPERSEDES
	PL-1002	FERNALD SITE ENVIRONMENTAL MONITORING PLAN	1	05/31/93	HINNEFELD	SNYDER	NONE
	FMPC-2175	ABANDONED-IN-PLACE (AIP) EQUIPMENT PROGRAM WORK PLAN	0	06/01/89		DEN HERDER	NONE
	PL-2194	FERNALD ENVIRONMENTAL RESTORATION MANAGEMENT CORPORATION SPILL PREVENTION CONTROL AND COUNTERMEASURE (SPCC) PLAN	1	05/25/94	HINNEFELD	MERCADAL	FMPC-2194
	FMPC-2214	ENVIRONMENTAL RESTORATION AND WASTE MANAGEMENT SITE SPECIFIC PLAN	0	07/01/90	GATES	JOHNSON	NONE
	PL-3006	MATERIALS CONTROL AND ACCOUNTABILITY PLAN	0	12/07/93	FRASER	LOWER	PL-FMPC-3006
	PL-3007	NPDES PERMIT COMPLIANCE PLAN	0	09/10/91	HAGEN	JOHNSTON	NONE
	PL-3008	QUALITY ASSURANCE PROJECT PLAN (QAPP) FOR RADIONUCLIDE EMISSION MEASUREMENTS	2	11/30/93	HINNEFELD	PALMER	NONE
	PL-3010	FY-1992 ENVIRONMENTAL RESTORATION AND WASTE MANAGEMENT SITE SPECIFIC PLAN	0	09/11/91	GATES	MCDONALD	NONE
	PL-3018	FEMP ASBESTOS MANAGEMENT PLAN	1	09/24/93	HINNEFELD	JOHNS	
	PL-3020	FEMP EMERGENCY PLAN	1	06/30/94	HINNEFELD	SCHOLZ	PL-3020I.1
	PL-3022	URANIUM SOILS INTEGRATED DEMONSTRATION: SITE CHARACTERIZATION DEMONSTRATION PLAN	0	08/02/93	HAGEN	NUHFER	NONE
	PL-3025	NATIONAL ENVIRONMENTAL POLICY ACT (NEPA) COMPLIANCE PLAN	1	12/30/93	HAGEN	HOMER	FD-1003
	PL-3027	FINANCIAL ACCOUNTABILITY PROGRAM DESCRIPTION	0	10/01/93	GATES	HOGE	NONE
	PL-3028	ENVIRONMENTAL PROTECTION IMPLEMENTATION PLAN	0	12/03/93	HINNEFELD	VALIMONT	NONE
	PL-3029	QA RULE IMPLEMENTATION PLAN	0	11/30/94	ABERNATHY	VARCHOL	NONE
	PL-3030	FERNALD PHYSICAL PROTECTION SECURITY PLAN	0	05/25/94	ZOBRIST	MILLER	NONE
	PL-3032	FERNALD SITE WIDE TRAINING PLAN	0	02/22/94	ZOBRIST	MERWIN	NONE
	PL-3034	ASBESTOS PROGRAM QUALITY ASSURANCE PLAN	0	04/07/94	HINNEFELD	MCCULLOUGH	NONE
	PL-3035	CONFIGURATION MANAGEMENT	1	09/01/94	HECK	REUTCKE	PL-3035
	PL-3042	CONTAINER DISTRIBUTION FACILITY (CDF) PLAN	0	03/24/95	WEST	STOFFER	NONE
	PL-3043	FEMP TRANSPORTATION EMERGENCY PLAN	0	04/01/95	HINNEFELD	SCHOLZ	NONE
	PL-3044	TRAFFIC MANAGEMENT PLAN	0	01/31/95	PHILLIPS	GILBERT	NONE

SECTION 4

CHARTERS

000090

6989

C H A R T E R S

DOCUMENT.NO.	TITLE	EFFECTIVE. DATE	REV. NO.	SME	DOC.OWNER	SUPERSEDES
CH-0203	ALARA COMMITTEE CHARTER	06/20/94	2	SCHILLING	HINNEFELD	CH-FMPC-0203
CH-0208	SUBCONTRACT REVIEW COMMITTEE CHARTER	04/11/94	1	WEATHERRED	ZOBRIST	FMPC-0208
CH-0210	BEST MANAGEMENT PRACTICES (BMP) COMMITTEE CHARTER	12/27/94	1	JOHNS	HINNEFELD	FMPC-0210
CH-0233	TRANSPORTATION SAFETY COMMITTEE CHARTER	08/18/93	1	STAPLETON	PAINE	NONE
CH-2005	ASBESTOS MANAGEMENT COMMITTEE CHARTER	06/01/94	1	MCCULLOUGH	HINNEFELD	NONE
CH-2007	FERNALD ENVIRONMENTAL MANAGEMENT PROJECT (FEMP) LEVEL 3 REVIEW BOARD CHARTER	11/30/94	4	ALDRICH	CLAUSS	CH-2007
CH-2013	INTERNAL AUDIT ORGANIZATION CHARTER	09/04/92	0	BURNS	BURNS	NONE
CH-2020	RADON PROJECT SUPPORT COMMITTEE CHARTER	02/25/94	0	SHANKS	HINNEFELD	NONE
CH-2021	COST SAVINGS PROGRAM SCREENING BOARD CHARTER	08/24/94	0	REEVES	CLAUSS	NONE

REMEDIATION SUPPORT OPERATIONS DIVISION DOCUMENT SYSTEM INDEX

FERNALD ENVIRONMENTAL RESTORATION MANAGEMENT CORPORATION

NON-CONTROLLED COPY

Fernald Environmental
FERMCO
Restoration Management Corporation

FERNALD ENVIRONMENTAL MANAGEMENT PROJECT

MAY 1, 1995

Supersedes Index Dated February 1, 1995

REMEDIATION SUPPORT OPERATIONS DIVISION
DOCUMENT SYSTEM INDEX

May 1, 1995

TABLE OF CONTENTS

SECTION	TITLE	PAGE
	Introduction	ii through iii
1	Document List (Numeric-Alpha Order)	1-1 through 1-15
2	CIO List	2-1
3	TCN List	3-1 through 3-3

REMEDIATION SUPPORT OPERATIONS DIVISION DOCUMENT SYSTEM INDEX

May 1, 1995

INTRODUCTION

Information and dates listed in the Document Index are current as of May 1, 1995. It is suggested that the user of this index enter changes manually as new, reissued, or revised procedures are transmitted.

The RSO Division Document System Index is issued every three months.

Questions pertaining to the Document Index may be directed to Procedure Administration, Extension 6126 - Steve Daugherty.

TYPES OF DOCUMENTS

A.PRO - Administrative Procedure

MANUAL - Manual

METH - Method

SP - Specification

T.PRO - Technical Procedure

DOCUMENT LIST

REMEDIATION SUPPORT OPERATIONS
PROGRAM INDEX

DOCUMENT.NO.	TYPE OF DOCUMENT	TITLE	DOC.OWNER	PTR LAST.NAME	ISSUE DATE	REV. NO.	REVISION DATE	SUPERSEDES
01-C-200	T.PRO	AEROSOL CAN PUNCTURING FACILITY	ALLMON	MENCHE	04/13/95	0		NONE
01-C-305	T.PRO	BALING SCRAP METAL DRUMS	HAZLEWOOD	HAZLEWOOD	01/07/94	1	01/31/94	NONE
01-C-306	T.PRO	CRUSHING SCRAP DRUMS	HAZLEWOOD	HAZLEWOOD	01/07/94	0		NONE
01-C-602	T.PRO	LOW LEVEL RADIOACTIVE WASTE (LLRW) SHIPMENT PREPARATION	ROWE	HURST	11/12/91	3	08/09/93	NONE
01-C-803	T.PRO	PREPARATION OF ENRICHED URANIUM COMPOUNDS (<20% U235) FOR OFFSITE SHIPMENT	OGG		01/20/94	0		NONE
01-C-902	T.PRO	DISPOSAL OF PLANT 1 EFFLUENT	HAZLEWOOD	BRISTOL	02/24/95	0		NONE
01-C-915	T.PRO	CLEANING CONTAMINATED METAL AND EQUIPMENT	PERKINS	KNIGHT	06/14/94	0		NONE
01-C-918	T.PRO	THORIUM OVERPACKING	HAZLEWOOD	HAZLEWOOD	06/21/93	0		NONE
02-C-100	T.PRO	PLANT 2/3 SUMP OPERATION	PERKINS	GLASSMEYER	09/15/94	0		NONE
02-C-113	T.PRO	UNH TRANSFER FROM TANK D1-1 TO D1-2	HUEY	SQUIBBS	03/20/95	1	03/29/95	NONE
02-C-307	T.PRO	UNH BLENDING AND NEUTRALIZATION	PERKINS	GLASSMEYER	09/12/93			
02-C-308	T.PRO	UNH TRANSFER AND NEUTRALIZATION	BRETTSCHNEI	HUEY	01/16/95	0		NONE
02-C-309	T.PRO	UNH LEAK INSPECTION, NOTIFICATION, AND CORRECTIVE ACTION	TRUJILLO	THOMPSON	02/09/95	0		20-C-900
02-C-310	T.PRO	IN-SITU NEUTRALIZATION OF UNH STORAGE TANKS	HUEY	SQUIBBS	03/17/95	0		NONE
02-C-420	T.PRO	SAMPLING UNH TANKS	PERKINS	GLASSMEYER	08/17/94	0		NONE
02-C-601	T.PRO	REFINERY SUMP	PERKINS	GLASSMEYER	02/10/94	0		NONE
02-C-910	T.PRO	INSPECTING REFINERY CONTROL FLOOR AREAS AND SUMPS AND OPERATING MANUAL SUMP PUMPS	PERKINS	ARNOLD	01/31/92	0		NONE
02-C-923	T.PRO	TRASH BALER OPERATION	HAZLEWOOD		10/27/94	0		NONE
04-C-900	T.PRO	TANK FARM SUMP	PERKINS	GLASSMEYER	05/17/93	0		NONE
04-C-905	T.PRO	INSPECTING PLANT 4 FLOOR CONTROL AREAS AND SUMPS	KLEIN	HENRY	05/18/93	0		NONE
04-C-906	T.PRO	INSPECTING AND SHIPPING UO3 T-HOPPERS	PERKINS	GLASSMEYER	03/02/94	0		NONE
05-C-209	T.PRO	COLLECTION AND DISPOSITION OF RESIDUES IN THE REMELT AREA	PERKINS	COPENHEFER	05/17/93	0		NONE
05-C-901	T.PRO	INSPECTING FLOOR CONTROL AREA AND SUMPS DAILY AND QUARTERLY	HAZLEWOOD		10/21/93	0		NONE
05-C-903	T.PRO	SUMP SYSTEM OPERATION	HAZLEWOOD		03/02/94	0		NONE
06-C-200	T.PRO	PLANT 6 ROLLING MILL AREA PERCHED GROUNDWATER COLLECTION SYSTEM	PERKINS	GRIFFIN	08/10/94	0		NONE
06-C-207	T.PRO	PLANT 6 MACHING AREA PERCHED GROUNDWATER EXTRACTION SYSTEM OPERATION	PERKINS	GRIFFIN	09/29/94	0		06-C-911
06-C-301	T.PRO	WATER TREATMENT	PERKINS	GLASSMEYER	07/24/92	1	04/04/94	NONE
06-C-910	T.PRO	INSPECTING PLANT 6 FLOOR CONTROL AREAS, TRENCHES, AND SUMPS DAILY AND QUARTERLY	PERKINS	GLASSMEYER	08/27/92	0		NONE
08-BN/E-490-02	SP	DISPOSAL OF WASTE FILTRATE AND EFFLUENTS	HUEY	ARNOLD	02/25/92	0		NONE

DOCUMENT.NO.	TYPE OF DOCUMENT	TITLE	DOC.OWNER	PTR LAST.NAME	ISSUE DATE	REV. NO.	REVISION DATE	SUPERSEDES
08-C-104	T.PRO	MAKEUP OF PRECOAT SLURRY AND PRECOATING ROTARY VACUUM FILTERS	HUEY	ARNOLD	10/06/92	0		NONE
08-C-200	T.PRO	PLANT 8 PERCHED GROUNDWATER VOLATILE ORGANIC COMPOUND (VOC) TREATMENT SYSTEM	HUEY	ARNOLD	11/19/93	0		08-C-117
08-C-213	A.PRO	NORMAL OPERATING AND OPERATIONAL SAFETY REQUIREMENTS (OSR) LOGS ROTARY KILN FACILITY	HUEY	ARNOLD	09/22/92	1	08/09/93	08-C-104
08-C-215	T.PRO	TREATING SUMP WATER IN PLANT 8 WITH TRU/CLEAR	HUEY	ARNOLD	10/22/93	0		C93-477
08-C-216	T.PRO	PLANT 8 PORTABLE DUST COLLECTOR/HEPA UNIT	HUEY	ARNOLD	03/23/95	0		NONE
08-C-600	T.PRO	SEWAGE SLUDGE TREATMENT AND FILTRATION	PERKINS	GLASSMEYER	02/01/94	1	02/07/94	NONE
08-C-602	T.PRO	LARGE EIMCO FILTER OPERATION - PLANT 8 WASTEWATER PROCESSING SYSTEM	PERKINS	ARNOLD	12/29/93	2	09/29/94	08-C-607
08-C-606	T.PRO	PLANT 8 PERCHED GROUNDWATER EXTRACTION SYSTEM	HUEY	ARNOLD	03/09/93	0		NONE
08-C-608	T.PRO	EAST EIMCO FILTER OPERATION	BRETTSCHNEI	HUEY	12/28/94	0		08-C-605
08-C-609	T.PRO	WEST EIMCO FILTER OPERATION	BRETTSCHNEI	HUEY	12/28/94	0		08-C-605
08-C-610	T.PRO	PLANT 8 SUPERCOMPACTOR OPERATION	OGG		10/20/94	0		NONE
08-C-611	T.PRO	PLANT 8 WASTEWATER RECEIVING SYSTEM	PERKINS	ARNOLD	03/03/95	0		NONE
08-C-612	T.PRO	HYDROFLUORIC ACID (HF) NEUTRALIZATION SYSTEM	PERKINS	ARNOLD	05/01/95	0		NONE
08-C-613	T.PRO	PLANT 8 PROCESS CONTROL TESTING PROCEDURE	PERKINS	ARNOLD	01/17/95	0		NONE
08-C-614	T.PRO	HYDROFLUORIC ACID (HF) DECONTAMINATION RINSING	PERKINS	ARNOLD	05/01/95	0		NONE
08-C-617	T.PRO	HYDROFLUORIC ACID (HF) TRANSFER FROM HF DUMPSTER TO HF TANK CAR	PERKINS	ARNOLD	05/01/95	0		NONE
08-C-913	T.PRO	INSPECTING PLANT 8 FLOOR CONTROL AREAS AND SUMPS	HUEY	ARNOLD	11/15/91	0		NONE
09-C-700	T.PRO	EXHAUST AIR AND OFF-SITE SYSTEMS FAN OPERATION	PERKINS	WALTON	04/07/94	0		NONE
09-C-902	T.PRO	SOUTHEAST AND NORTHWEST PADS AND PAD SUMPS	PERKINS	GLASSMEYER	10/21/93	0		NONE
09-C-905	T.PRO	INSPECTING PLANT 9 FLOOR CONTROL AREAS AND SUMPS	PERKINS	GLASSMEYER	08/05/93	0		NONE
09-C-911	T.PRO	PLANT 9 PERCHED GROUNDWATER EXTRACTION SYSTEM	HUEY	ARNOLD	03/09/93	0		NONE
11-C-217	T.PRO	OPERATION OF PILOT PLANT SUMP SYSTEM	PERKINS	GLASSMEYER	10/04/94	0		NONE
11-C-243	T.PRO	INSPECTING PILOT PLANT FLOOR CONTROL AREAS AND SUMPS DAILY AND QUARTERLY	KLEIN	OGG	04/08/92	0		NONE
20-C-001	A.PRO	CHANGES TO FORM ENTRIES	PERKINS	GLASSMEYER	05/17/93	0		NONE
20-C-007	T.PRO	PACKAGING DEPLETED URANIUM TWO-INCH THICK FLAT BILLETS	OGG		09/14/92	1	08/09/93	NONE
20-C-008	T.PRO	PACKAGING OF DEPLETED URANIUM MARK 31 INGOTS AND CORES	OGG		09/14/92	1	08/09/93	NONE
20-C-009	T.PRO	RESPONDING TO STORM SEWER PH ALARMS	PERKINS	GLASSMEYER	05/24/93	0		02-C-914
20-C-010	T.PRO	ESTABLISHMENT OF AN ENGINEERING CONTROL AREA (ECA) FOR	HAZLEWOOD	CRAIG	09/12/94	0		NONE

DOCUMENT.NO.	TYPE OF DOCUMENT	TITLE	DOC.OWNER	PTR LAST.NAME	ISSUE DATE	REV. NO.	REVISION DATE	SUPERSEDES
		DISPOSITION OF SAMPLE RESIDUES						
20-C-011	T.PRO	PHYSICAL INVENTORY OF NUCLEAR MATERIALS	HAZLEWOOD	HAZLEWOOD	04/01/93	0		C92-164
20-C-014	T.PRO	WET AND DRY SYSTEMS CLEAN-OUT	PERKINS	EVANS	02/18/93	1	12/03/93	NONE
20-C-015	T.PRO	OPERATING THE KELLY DECONTAMINATION SYSTEM	PERKINS	EVANS	08/10/93	1	12/01/94	NONE
20-C-017	T.PRO	MOVEMENT OF HAZARDOUS/MIXED WASTE	HAZLEWOOD	CRAIG	09/20/94	0		20-C-017
20-C-019	T.PRO	INSPECTING AND OPERATING HOISTS AND CRANES	PERKINS	ROMINE	09/19/94	0		01-C-916 02-C-924 04-C-910 05-C-910 06-C-906 09-C-910 11-C-901 43-C-910
20-C-020	T.PRO	INSPECTION OF LOW LEVEL RADIOACTIVE WASTE (LLRW) AND NUCLEAR MATERIAL (NM) CONTAINERS	HAZLEWOOD	LENARDUZZI	12/30/94	0		NONE
20-C-100	T.PRO	MOVING AND STORING DEPLETED, NORMAL, AND ENRICHED URANIUM MATERIALS <20% AND THORIUM METAL AND MATERIALS	OGG		10/04/94	0		20-C-101 20-C-102
20-C-104	T.PRO	OPERATION OF ALLEGANY TECHNOLOGY ELECTRONIC PORTABLE HANGING SCALE MODEL CM30K	PERKINS	ROMINE	04/26/93	0		NONE
20-C-105	T.PRO	OPERATION OF ANTHES MODEL RZ-40 ROTO-ZOOM AERIAL LIFT	PERKINS	ROMINE	01/05/95	0		01-108
20-C-106	T.PRO	RADVAC 2000 WET VACUUM SYSTEM OPERATION	KLEIN	COPENHEFER	12/29/93	0		NONE
20-C-107	T.PRO	AIR OPERATED PUMPING SUCTION UNIT (MODEL AB-482) OPERATION	KLEIN	COPENHEFER	02/22/94	0		NONE
20-C-108	T.PRO	PACKAGING AND OFF-SITE SHIPMENT OF DEPLETED URANIUM DERBIES	OGG		12/30/93	0		20-C-005
20-C-109	T.PRO	CRUSHING SCRAP DRUMS USING THE TEEMARK DRUM PACKER/CRUSHER	HAZLEWOOD	MORRIS	01/11/95	0		NONE
20-C-111	T.PRO	TRANSPORT OF LOW LEVEL RADIOACTIVE WASTE AND NUCLEAR MATERIAL	HAZLEWOOD	LENARDUZZI	02/06/95	0		NONE
20-C-301	T.PRO	OPERATION OF THE ALLEGRO BREATHING AIR COMPRESSOR	HAZLEWOOD	CRAIG	01/27/95	0		20-C-301
20-C-302	T.PRO	PORTABLE AIR FILTRATION DEVICE OPERATION	PERKINS	PALMER	01/30/95	0		20-C-909
20-C-303	T.PRO	OPERATING THE MILWAUKEE ROTARY HAMMER DRILL	WHITE	STEVENS	02/06/95	0		NONE
20-C-304	T.PRO	OPERATION OF THE TRELAWNY NEDLE SCALER/TRIPLE SCALER TOOL	WHITE	STEVENS	02/24/95	0		NONE
20-C-305	T.PRO	OPERATION OF THE AIR-PAL BREATHING AIR COMPRESSOR	HAZLEWOOD	ASKREN	04/27/95	0		NONE
20-C-400	T.PRO	PREPARATION FOR, AND REMOVAL OF, SNOW AND/OR ICE	BLANKENSHIP	ADAMS	12/08/94	0		SSOP-0053
20-C-500	T.PRO	INSPECTING RCRA WASTE LOAD/UNLOAD AND STAGING AREA	HAZLEWOOD	CRAIG	09/07/94	0		NONE

DOCUMENT.NO	TYPE OF DOCUMENT	TITLE	DOC.OWNER	PTR LAST.NAME	ISSUE DATE	REV. NO.	REVISION DATE	SUPERSEDES
20-C-501	T.PRO	BOILER PLANT ASH LOADING AND TRANSPORTING FOR OFF-SITE DISPOSAL	HAZLEWOOD	MORRIS	10/01/92	1	09/12/93	NONE
20-C-505	T.PRO	PLANT 2/3 AND PLANT 8 PERCHED GROUNDWATER EXTRACTION SYSTEM	HUEY	ARNOLD	02/05/92	1	08/09/93	C91-071
20-C-506	T.PRO	PLANT 2/3 PERCHED GROUNDWATER EXTRACTION SYSTEM	PERKINS	ARNOLD	10/04/94	0		NONE
20-C-510	T.PRO	REMOVAL, TRANSPORT, AND STORAGE OF DECANT SUMP LIQUID FROM K-65 SILOS 1 AND 2	PENNINGTON	HENSLEY	01/04/93	0		NONE
20-C-600	T.PRO	OVERPACKING DEFECTIVE CONTAINERS	HAZLEWOOD	BELGRAVE	02/24/95	0		01-C-804
20-C-602	T.PRO	INSPECTION AND OPERATION OF NILFISK PORTABLE VACUUM UNITS	PERKINS	PALMER	02/10/94	0		NONE
20-C-603	T.PRO	REMOVAL AND REPLACEMENT OF NILFISK PORTABLE VACUUM UNIT FILTERS AND DUST BAG	PERKINS	PALMER	06/09/94	0		NONE
20-C-604	T.PRO	CONTROL AND UTILIZATION OF CONTAMINATED TRASH DUMPSTERS	HAZLEWOOD	FRINK	10/18/93	1	05/04/94	NONE
20-C-606	T.PRO	HAZARDOUS MATERIAL SPILL CLEAN-UP	HAZLEWOOD	CRAIG	01/27/95	0		20-C-606
20-C-607	T.PRO	SEGREGATION OF WOODEN PALLETS	HAZLEWOOD		10/10/91	1	08/09/93	
20-C-609	T.PRO	INSPECTION OF SAFETY BELTS, HARNESSES, AND LANYARDS	PERKINS	PALMER	03/02/94	0		01-102
20-C-610	T.PRO	BIRD CARCASS AND DROPPING REMOVAL	PERKINS	PARMER	05/18/93	0		NONE
20-C-611	T.PRO	ASSEMBLY/DISASSEMBLY OF SCAFFOLDING	PERKINS	ARNOLD	03/02/94	0		01-101
20-C-612	T.PRO	INDUSTRIAL CLEANING	PERKINS	PARMER	01/06/93	0		01-103
20-C-613	T.PRO	EMPTYING LIQUID HAZARDOUS WASTE STORAGE CONTAINERS	HAZLEWOOD	CRAIG	08/05/93	0		NONE
20-C-614	T.PRO	OPERATION OF GENIE LIFT MODEL PL36PDC	PERKINS	ROMINE	09/21/92	1	08/09/93	01-107
20-C-615	T.PRO	HANDLING UNCHARACTERIZED WASTE IN THE CONTROLLED HOLDING AREA	HAZLEWOOD	CRAIG	10/06/94	0		NONE
20-C-616	T.PRO	INSPECTION OF HAZARDOUS WASTE MANAGEMENT UNITS	HAZLEWOOD	CRAIG	09/07/94	0		NONE
20-C-617	T.PRO	DISPOSAL OF CONTROLLED AREA OFFICE TRASH	FRINK	MENCHE	03/15/94	0		NONE
20-C-619	T.PRO	PACKAGING SOIL BORING MATERIAL FOR TRANSFER TO THE 90-DAY STORAGE AREA	HAZLEWOOD	CRAIG	09/07/94	0		NONE
20-C-620	T.PRO	90-DAY STORAGE AREA	HAZLEWOOD	CRAIG	10/06/94	0		NONE
20-C-623	T.PRO	RECEIPT AND STORAGE OF LOW LEVEL RADIOACTIVE WASTE (LLRW) AND NUCLEAR MATERIAL (NM)	HAZLEWOOD	BRISTOL	02/06/95	0		01-C-608
20-C-625	T.PRO	EVALUATING LOW LEVEL RADIOACTIVE WASTE (LLRW) BULK WASTE STREAMS FOR SHIPMENT	FRINK	ERFMAN	12/15/93	1	02/04/94	NONE
20-C-627	T.PRO	LIQUID REMOVAL FROM CONTAINERIZED LOW LEVEL RADIOACTIVE WASTE	ROWE	BRISTOL	03/20/95	0		01-C-604
20-C-630	T.PRO	RECEIPT INSPECTION AND PLACEMENT OF HAZARDOUS, MIXED, PCB, AND ASBESTOS WASTES INTO STORAGE	HAZLEWOOD	HARPER	03/20/95	0		01-C-605

DOCUMENT.NO	TYPE OF DOCUMENT	TITLE	DOC.OWNER	PTR LAST.NAME	ISSUE DATE	REV. NO.	REVISION DATE	SUPERSEDES
20-C-700	T.PRO	NORCLEAN PORTABLE VACUUM OPERATION	PERKINS	PALMER	03/02/94	0		NONE
20-C-701	T.PRO	OPERATION OF SPENCER AND HOFFMAN PORTABLE DUST COLLECTORS	PERKINS	LENARDUZZI	07/05/89	2	12/14/92	NONE
20-C-704	T.PRO	CHANGING HEPA FILTERS AND PREFILTERS	PERKINS	PALMER	03/17/89	2	01/24/93	NONE
20-C-705	T.PRO	CHANGING DUST COLLECTOR MODULE AND SECONDARY SEPARATOR CARTRIDGE FILTERS	PERKINS	PALMER	08/17/94	0		NONE
20-C-707	T.PRO	DOP TESTING OF IN-PLACE HEPA FILTERS	PERKINS	PALMER	05/07/90	1	12/10/92	NONE
20-C-709	T.PRO	BAGHOUSE TYPE DUST COLLECTOR REMOVAL/REPLACEMENT	PERKINS	GLASSMEYER	07/26/93	0		NONE
20-C-711	T.PRO	HAKO MINUTEMAN PORTABLE VACUUM CLEANER OPERATION	PERKINS	PALMER	08/05/93	0		NONE
20-C-712	T.PRO	PENTEK VAC-PAC, CORNER-CUTTER, AND SQUIRREL-III SCARIFYING OPERATIONS	PERKINS	PARMER	02/22/95	0		NONE
20-C-801	T.PRO	STORAGE OF ENRICHED MATERIAL	OGG		06/02/90	2	11/13/91	NONE
20-C-806	T.PRO	SAMPLING WASTE FOR HAZARD IDENTIFICATION	RAMIREZ	GNOOSE	11/27/94	0		20-C-805
20-C-807	T.PRO	INSPECTION OF PLANT 2/3 (REFINERY) AND PLANT 8 SAFETY SHOWER/EYE BUBBLER STATIONS	PERKINS	ARNOLD	01/06/93	0		08-C-915 02-C-918
20-C-810	T.PRO	DISPOSITION OF SAMPLE RESIDUES	HAZLEWOOD	CRAIG	09/01/94	0		NONE
20-C-902	T.PRO	INSPECTING AND OPERATING LIQUID PROPANE GAS (LPG) POWERED HANDSTACKERS AND TUGGERS	PERKINS	PARMER	09/13/93	0		NONE
20-C-903	A.PRO	GUIDELINES FOR THE PREVENTION OF URANIUM METAL FIRES	HAZLEWOOD		03/10/88	0		NONE
20-C-904	A.PRO	GENERAL NUCLEAR SAFETY REQUIREMENTS	HAZLEWOOD		05/18/93	0		NONE
20-C-908	T.PRO	RCRA WAREHOUSE PORTABLE CRANE OPERATION	HAZLEWOOD	CRAIG	07/09/90	1	03/09/93	NONE
20-C-910	T.PRO	VENTING POTENTIALLY EXPLOSIVE DRUMS	HAZLEWOOD	LENARDUZZI	04/08/92	1	05/20/93	NONE
20-C-912	T.PRO	CHECKING SCALE OPERATION	PERKINS	BISCHOFF	11/18/94	0		01-C-904 02-C-909 04-C-901 05-C-902 06-C-903 08-C-905 09-C-904 11-C-230
20-C-916	T.PRO	CLEANING SUMP SYSTEMS	PERKINS	GLASSMEYER	07/09/92	1	08/09/93	NONE
20-C-917	T.PRO	HYDROGEN MONITORING & REMOVING NUC-FIL VENT PLUGS FROM DRUMS	HAZLEWOOD	HARPER	07/13/92	3	08/09/93	NONE
20-C-918	T.PRO	PREPARATION FOR AND MOVEMENT OF UNVENTED CONTAINERS	HAZLEWOOD	BELGRAVE	04/03/95	0		NONE
20-PS-300-03	SP	SODA ASH (COMMERCIAL GRADE)	PERKINS	GLASSMEYER	03/04/93	0		NONE

DOCUMENT.NO.	TYPE OF DOCUMENT	TITLE	DOC.OWNER	PTR LAST.NAME	ISSUE DATE	REV. NO.	REVISION DATE	SUPERSEDES
20-PS-300-05	SP	MAGNESIUM OXIDE (MGO)	PERKINS	PATTON	08/25/93	0		NONE
20-PS-300-10	SP	AQUEOUS SODIUM HYDROXIDE (COMMERCIAL GRADE)	PERKINS	PATTON	04/12/93	0		NONE
20-PS-300-19	SP	FILTER AID	PERKINS	GLASSMEYER	04/26/93	0		NONE
20-PS-300-20	SP	HYDRATED LIME (COMMERCIAL GRADE)	PERKINS	PATTON	04/15/93	0		NONE
20-PS-300-22	SP	FLAKE CAUSTIC SODA (TECHNICAL GRADE)	PERKINS	GLASSMEYER	03/04/93	0		NONE
20-PS-400-20	SP	WOOL/NYLON FILTER BAGS FOR THE UNITED CONVEYOR DUST COLLECTOR	PENNINGTON	PALMER	03/19/93	0		NONE
20-PS-400-25	SP	VENDOR SPECIFICATION AND CERTIFICATION REQUIREMENTS FOR POLYPROPYLENE FELT FITER BAGS - HOFFMAN PORTABLE VACUUM UNITS	PERKINS	PALMER	10/27/87			NONE
20-PS-400-29	SP	HEPA FILTER ELEMENTS FOR GENERAL DYNAMICS PORTABLE HEPA FILTRATION DEVICE	PERKINS	PALMER	03/20/95	0		NONE
20-PS-400-30	SP	HEPA FILTER ELEMENTS FOR BARTLETT PORTABLE VENTILATION DEVICES	PERKINS	PALMER	03/20/95	0		NONE
20-PS-400-31	SP	HIGH HUMIDITY TYPE HIGH EFFICIENCY PARTICULATE AIR (HEPA) FILTER ELEMENTS	PENNIX	PALMER	03/10/95	0		20-PS-400-31
20-PS-400-32	SP	FLUID SEAL TYPE HIGH EFFICIENCY PARTICULATE AIR (HEPA) FILTER ELEMENTS	PERKINS	PALMER	07/26/93	0		NONE
20-PS-400-33	SP	MEDIUM EFFICIENCY PARTICULATE AIR (MEPA) FILTER ELEMENTS FOR 4000 CFM CSC F-SERIES (FLUID SEAL) FILTRATION DEVICE	PERKINS	PALMER	07/26/93	0		NONE
20-PS-400-34	SP	METAL FRAME MEDIUM EFFICIENCY, PARTICULATE AIR FILTER SPECIFICATION	PENNIX	PALMER	03/17/95	0		NONE
43-BE-410-02	SP	BIODENITRIFICATION FACILITY OPERATION	PENNINGTON	PENNINGTON	08/04/92	2	12/01/94	NONE
43-C-100	T.PRO	CLEANING GLASS AND PLASTIC LABORATORY WARE	PENNINGTON	PENNINGTON	09/22/92	0		NONE
43-C-101	T.PRO	STORING AND HANDLING CHEMICALS	PENNINGTON	PENNINGTON	11/12/92	1	08/09/93	NONE
43-C-102	T.PRO	SAMPLE PRESERVATION BY ACID ADDITION	PENNINGTON	PENNINGTON	09/08/93	0		NONE
43-C-105	T.PRO	ION EXCHANGE RESIN SLUICING AND ADDITION - SOUTH PLUME INTERIM TREATMENT (SPIT) SYSTEM	PENNINGTON	KNEIP	09/06/94	0		NONE
43-C-300	T.PRO	ELECTRODIALYSIS REVERSAL (EDR)	PENNINGTON	HENSLEY	09/14/94	0		NONE
43-C-301	T.PRO	WATER TREATMENT PLANT OPERATION	PENNINGTON	PENNINGTON	05/28/93	1	06/01/94	NONE
43-C-303	T.PRO	COOLING WATER TOWER OPERATION	PENNINGTON	HALCOMB	05/05/93	0		NONE
43-C-304	T.PRO	GRAVER WATER SOFTENERS	PENNINGTON	HALCOMB	05/11/92	0		NONE
43-C-305	T.PRO	WATER PLANT LABORATORY PROCEDURES	PENNINGTON	HALCOMB	01/03/94	0		NONE
43-C-306	T.PRO	STORM SEWER LIFT STATION	PENNINGTON	HALCOMB	08/13/93	1	05/11/94	NONE

DOCUMENT.NO.	TYPE OF DOCUMENT	TITLE	DOC.OWNER	PTR LAST.NAME	ISSUE DATE	REV. NO.	REVISION DATE	SUPERSEDES
43-C-308	T.PRO	RESPONDING TO INDICATIONS OF OUT-OF-SPECIFICATION EXCURSIONS OF STORM SEWER WATER QUALITY	PENNINGTON	HENSLEY	08/13/93	1	05/16/94	NONE
43-C-310	T.PRO	SAMPLING DRINKING WATER FOR TOTAL COLIFORM DETERMINATION	PENNINGTON	PENNINGTON	10/14/93	0		NONE
43-C-311	T.PRO	WATER PLANT BLOWDOWN OPERATION	PENNINGTON	HALCOMB	05/05/93	0		NONE
43-C-313	T.PRO	STORMWATER RETENTION BASIN SLUDGE REMOVAL	PENNINGTON	PENNINGTON	06/01/94	0		NONE
43-C-315	T.PRO	BIODENITRIFICATION FACILITY ROUTINE CHECKS	PENNINGTON	OLBERDING	08/09/93	0		NONE
43-C-316	T.PRO	CORRECTIVE ACTIONS FOR MALFUNCTIONS OF THE BIODENITRIFICATION FACILITY	PENNINGTON	PENNINGTON	08/13/93	0		NONE
43-C-318	T.PRO	SURGE LAGOON UNDERDRAIN SYSTEM	PENNINGTON	LESLIE	04/19/93	0		NONE
43-C-319	T.PRO	SURGE LAGOON INSPECTION	PENNINGTON	LESLIE	06/07/94	0		NONE
43-C-320	T.PRO	BIODENITRIFICATION FACILITY OPERATION	PENNINGTON	PENNINGTON	07/06/93	0		NONE
43-C-322	T.PRO	FILLING THE METHANOL STORAGE TANK	PENNINGTON	LESLIE	04/06/93	0		NONE
43-C-323	T.PRO	WATER PLANT TEMPORARY TANKS	PENNINGTON	OLBERDING	05/13/93	0		NONE
43-C-324	T.PRO	SAMPLING AND ANALYZING FEMP WATER SUPPLIES	PENNINGTON	HENSLEY	09/20/93	1	05/11/94	NONE
43-C-325	T.PRO	BIODENITRIFICATION HIGH NITRATE TANK	PENNINGTON	HENSLEY	09/21/93	0		NONE
43-C-326	T.PRO	STORMWATER RETENTION BASIN CONTROL SYSTEM OPERATION	PENNINGTON	HENSLEY	08/13/93	1	05/23/94	NONE
43-C-327	T.PRO	EFFLUENT TREATMENT SYSTEM NORMAL	PENNINGTON	LESLIE	03/23/93	0		NONE
43-C-329	T.PRO	BIODENITRIFICATION FACILITY AND EFFLUENT TREATMENT EMERGENCIES	PENNINGTON	LESLIE	02/04/94	0		NONE
43-C-330	T.PRO	MEDRO WATER SOFTENER OPERATION	PENNINGTON	HALCOMB	05/05/92	0		NONE
43-C-332	T.PRO	OPERATION OF THE HACH DR/3000 SPECTROPHOTOMETER	PENNINGTON	HUDSON	01/06/95	0		NONE
43-C-333	T.PRO	SAMPLING DRINKING WATER CONTAINING TOTAL OR FECAL COLIFORM	PENNINGTON	KOCH	08/05/93	0		NONE
43-C-334	T.PRO	OPERATION OF THE HACH DR/2000 SPECTROPHOTOMETER	PENNINGTON	PENNINGTON	05/28/92	0		NONE
43-C-335	T.PRO	INTERIM ADVANCED WASTE WATER TREATMENT (STORMWATER RETENTION BASIN) SYSTEM OPERATION	PENNINGTON	LESLIE	06/19/92	1	03/12/93	NONE
43-C-336	T.PRO	INTERIM ADVANCED WASTEWATER TREATMENT - BIODENITRIFICATION EFFLUENT TREATMENT SYSTEM OPERATION	PENNINGTON	LESLIE	10/08/93	0		NONE
43-C-337	T.PRO	WASTE PIT AREA STORMWATER RUNOFF CONTROL SYSTEM (WPASRC) OPERATION	PENNINGTON	WADE	07/30/92	1	08/09/93	NONE
43-C-338	T.PRO	OPERATION, INSPECTION AND TEST OF K-65 SILOS NO. 1 AND NO. 2 EMERGENCY POWER SUPPLY (EPS) GENERATOR	PENNINGTON	PENNINGTON	11/04/92	1	07/16/93	NONE
43-C-339	T.PRO	OFF-NORMAL OPERATION (LOW TRAILER EFFLUENT PH) OF THE INTERIM ADVANCED WASTE WATER TREATMENT (STORMWATER RENTION BASIN) FACILITY	PENNINGTON	KNEIP	08/11/92	0		NONE

DOCUMENT.NO.	TYPE OF DOCUMENT	TITLE	DOC.OWNER	PTR LAST.NAME	ISSUE DATE	REV. NO.	REVISION DATE	SUPERSEDES
43-C-340	T.PRO	AWWT PHASE I AND II OPERATIONS	PENNINGTON	GLASSMEYER	03/15/95	0		NONE
43-C-341	T.PRO	ADVANCED WASTE WATER TREATMENT BASELINE VALVE LINE-UP	PENNINGTON	WALTON	11/03/94	0		NONE
43-C-342	T.PRO	ADVANCED WASTEWATER TREATMENT (AWWT) CONTROL ROOM OPERTIONS	PENNINGTON	LESLIE	12/02/94	0		NONE
43-C-343	T.PRO	ADVANCED WASTE WATER TREATMENT (AWWT) BULK CHEMICAL SYSTEMS	PENNINGTON	LESLIE	01/18/95	0		NONE
43-C-344	T.PRO	AWWT SUMPS OPERATIONS AND RESPONSE TO CHEMICAL SPILLS	PENNINGTON	GRIFFIN	01/13/95	0		NONE
43-C-345	T.PRO	REGENERATION, SLUICE IN & OUT OF ION EXCHANGE RESIN FOR AWWT PHASES I & II	PENNINGTON	KNEIP	01/09/95	0		NONE
43-C-346	T.PRO	AWWT PHASE I AND II ELUATE PRECIPITATION	PENNINGTON	RUSH	01/16/95	0		NONE
43-C-347	T.PRO	AWWT EMERGENCY SHOWER SYSTEM OPERATION	PENNINGTON	LESLIE	01/26/95	0		NONE
43-C-348	T.PRO	AWWT HEATING, VENTILATION AND AIR CONDITIONING SYSTEM OPERATION	PENNINGTON	LESLIE	01/26/95	0		NONE
43-C-349	T.PRO	AWWT PROCESS AREA MAKE-UP AIR SYSTEM OPERATION	PENNINGTON	LESLIE	01/26/95	0		NONE
43-C-350	T.PRO	AWWT STEAM AND CONDENSATE SYSTEM OPERATIONS	PENNINGTON	LESLIE	01/26/95	0		NONE
43-C-351	T.PRO	AWWT COMPRESSED AND BREATHABLE AIR SYSTEMS OPERATION	PENNINGTON	LESLIE	01/26/95	0		NONE
43-C-353	T.PRO	AWWT TREATED WATER SYSTEM OPERATION	PENNINGTON	LESLIE	01/26/95	0		NONE
43-C-354	T.PRO	AWWT CHILLED WATER SYSTEM OPERATION	PENNINGTON	LESLIE	01/26/95	0		NONE
43-C-400	T.PRO	BOILER WATER AND FEED WATER TESTING	PENNINGTON	NABER	08/27/93	0		NONE
43-C-401	T.PRO	COAL HANDLING EQUIPMENT OPERATION	PENNINGTON	NABER	11/04/92	2	01/12/94	NONE
43-C-402	T.PRO	OPERATION OF STEAM GENERATING EQUIPMENT	PENNINGTON	PENNINGTON	11/16/93	1	11/30/93	NONE
43-C-403	T.PRO	BOILER COMBUSTION CONTROL	PENNINGTON	NABER	08/17/93	0		NONE
43-C-404	T.PRO	FEEDWATER DEAERATING HEATER OPERATION	PENNINGTON	NABER	08/25/93	0		NONE
43-C-405	T.PRO	BLOWING SOOT ON RILEY BOILERS	PENNINGTON	NABER	04/15/93	0		NONE
43-C-406	T.PRO	ASH REMOVAL SYSTEM OPERATION	PENNINGTON	NABER	09/21/93	0		NONE
43-C-407	T.PRO	AIR COMPRESSORS	PENNINGTON	STRAUTMAN	02/04/94	0		NONE
43-C-408	T.PRO	COALYARD BULLDOZER AND ENDLOADER OPERATION	PENNINGTON	NABER	08/27/93	0		NONE
43-C-410	T.PRO	RECEIPT, SAMPLING, AND STORING COAL	PENNINGTON	NABER	08/23/93	0		NONE
43-C-411	T.PRO	ELECTROSTATIC PRECIPITATOR OPERATION	PENNINGTON	NABER	08/13/93	0		NONE
43-C-412	T.PRO	MANAGEMENT OF THE WATER COVER FOR WASTE PIT 6	PENNINGTON	NABER	08/08/91	0		NONE
43-C-413	T.PRO	HANDLING WASTE MATERIALS WITH THE INDUSTRIAL VACUUM LOADER TRUCK (SUPERSUCKER)	PENNINGTON	HENSLEY	11/09/92	0		NONE
43-C-414	T.PRO	INDUSTRIAL VACUUM LOADER TRUCK (SUPERSUCKER) OPERATION	PENNINGTON	HENSLEY	02/02/94	0		NONE
43-C-415	T.PRO	COAL PILE RUNOFF CONTROL FACILITY OPERATION	PENNINGTON	PENNINGTON	07/16/92	2	04/04/94	NONE
43-C-418	T.PRO	OPERATION OF MODEL NOS-2A-67 WATERTUBE BOILER	PENNINGTON	PENNINGTON	07/30/92	0		NONE
43-C-419	T.PRO	ION EXCHANGE RESIN SLUICING AND ADDITION FOR THE INTERIM	PENNINGTON	LESLIE	01/27/93	0		NONE

DOCUMENT.NO.	TYPE OF DOCUMENT	TITLE	DOC.OWNER	PTR LAST.NAME	ISSUE DATE	REV. NO.	REVISION DATE	SUPERSEDES
		ADVANCED WASTEWATER TREATMENT BIODENITRIFICATION EFFLUENT TREATMENT SYSTEM						
43-C-420	T.PRO	ION EXCHANGE RESIN DEWATERING AND DRUMMING	PENNINGTON	LESLIE	01/04/93	1	10/20/93	NONE
43-C-421	T.PRO	ION EXCHANGE RESIN SLUICING AND ADDITION FOR THE INTERIM ADVANCED WASTE WATER TREATMENT (STORMWATER RETENTION BASIN) SYSTEM	PENNINGTON	HENSLEY	01/04/93	0		NONE
43-C-426	T.PRO	STEAM SHUTDOWN/RESTORATION TO FACILITIES	PENNINGTON	PENNINGTON	08/12/94	0		NONE
43-C-501	T.PRO	SANITARY SEWAGE TREATMENT PLANT OPERATION	PENNINGTON	HALCOMB	10/06/93	1	11/30/94	NONE
43-C-601	T.PRO	INSPECTION/OPERATION OF SURFACE IMPOUNDMENTS	PENNINGTON	HENSLEY	07/30/92	0		NONE
43-C-701	T.PRO	GENERAL SUMP OPERATION	PENNINGTON	LESLIE	11/17/93	1	02/02/94	NONE
43-C-702	T.PRO	RECEIVING BULK LIME	PENNINGTON	LESLIE	09/08/93	0		NONE
43-C-704	T.PRO	LIME SLAKER OPERATION	PENNINGTON	HALCOMB	04/08/92	0		NONE
43-C-705	T.PRO	LIME SLURRY DISTRIBUTION	PENNINGTON	PENNINGTON	04/22/92	0		NONE
43-C-800	T.PRO	REMOVAL AND REPLACEMENT OF CHLORINE CYLINDERS	PENNINGTON	HENSLEY	03/14/95	0		NONE
43-C-801	A.PRO	UTILITIES ENGINEER - GENERAL RESPONSIBILITIES	PENNINGTON	PENNINGTON	03/01/95	0		NONE
43-C-802	T.PRO	EMERGENCY POWER SYSTEM	PENNINGTON	PENNINGTON	05/18/93	0		NONE
43-C-804	T.PRO	NATURAL GAS METERING STATION AND DISTRIBUTION SYSTEM	PENNINGTON	PENNINGTON	11/16/93	0		NONE
43-C-805	T.PRO	TESTING FIRE PROTECTION SYSTEM WATER PUMPS	PENNINGTON	PENNINGTON	11/05/93	0		NONE
43-C-806	T.PRO	WINTER OPERATION OF THE FIRE PROTECTION WATER STORAGE SYSTEM	PENNINGTON	PENNINGTON	07/16/91	0		NONE
43-C-902	T.PRO	OPERATION, INSPECTION, AND TEST OF THE EMERGENCY OPERATIONS CENTER GENERATOR	PENNINGTON	PENNINGTON	05/28/93	0		NONE
43-C-903	T.PRO	SOUTH PLUME INTERIM TREATMENT (SPIT) SYSTEM OPERATION	PENNINGTON	WALTON	03/25/94	0		NONE
43-C-909	T.PRO	WATER TREATMENT PLANT DUST COLLECTOR	PENNINGTON	HENSLEY	06/23/93	0		NONE
43-M-1001	METH	DISSOLVED OXYGEN (DO) AZIDE MODIFICATION OF WINKLER METHOD	PENNINGTON	LESLIE	02/04/94	0		NONE
43-M-1002	METH	DISSOLVED OXYGEN (DO), MEMBRANE ELECTRODE METHOD	PENNINGTON	HUDSON	04/19/93	0		NONE
43-M-1003	METH	DPD METHOD FOR FREE AND TOTAL CHLORINE TEST	PENNINGTON	LESLIE	11/17/93	0		NONE
43-M-1004	METH	TOTAL COLIFORM TESTING BY MEMBRANE FILTER METHOD	PENNINGTON	HUDSON	01/26/94	0		NONE
43-M-1005	METH	FECAL COLIFORM TESTING OF WATER BY MEMBRANE FILTER METHOD	PENNINGTON	HUDSON	05/03/94	0		NONE
43-M-1006	METH	BRPADAP TEST FOR SOLUBLE URANIUM BY SPECTROPHOTOMETER	PENNINGTON	HUDSON	05/28/92	0		NONE
43-M-1007	METH	ALKALINITY (TOTAL AND PHENOLPHALEIN) TESTING OF WATER	PENNINGTON	PENNINGTON	03/28/94	0		NONE
43-M-1008	METH	TOTAL HARDNESS TESTING OF WATER BY EDTA TITRIMETRIC METHOD	PENNINGTON	HUDSON	09/20/93	0		NONE
43-M-1009	METH	TOTAL PHOSPHORUS TESTING OF WATER BY ASCORBIC ACID METHOD WITH PERSULFATE PREDIGESTION	PENNINGTON	PENNINGTON	05/28/92	0		NONE
43-M-1010	METH	STABILITY TEST OF WATER BY SATURATION WITH CALCIUM CARBONATE	PENNINGTON	PENNINGTON	11/16/93	1	04/04/94	NONE

DOCUMENT.NO	TYPE OF DOCUMENT	TITLE	DOC.OWNER	PTR LAST.NAME	ISSUE DATE	REV. NO.	REVISION DATE	SUPERSEDES
43-M-1011	METH	PH (HYDROGEN ION) TESTING OF WATER BY ELECTROMETRIC METHOD	PENNINGTON	PENNINGTON	10/12/94	0		NONE
43-M-1012	METH	CONDUCTIVITY/RESISTIVITY TESTING OF WATER BY ELECTROMETERIC METHOD	PENNINGTON	PENNINGTON	07/22/91	0		NONE
43-M-1013	METH	SPECTROPHOTOMETRIC TEST FOR NITRATES IN WATER USING MODIFIED CADMIUM REDUCTION METHOD	PENNINGTON	PENNINGTON	10/01/92	0		NONE
43-M-1014	METH	TOTAL SUSPENDED (NON-FILTERABLE) SOLIDS IN WATER	PENNINGTON	PENNINGTON	10/12/94	0		NONE
43-M-1015	METH	TOTAL DISSOLVED (FILTERABLE) SOLIDS IN WATER	PENNINGTON	PENNINGTON	12/02/94	0		NONE
43-M-1016	METH	IGNITION TEST FOR VOLATILE AND FIXED SOLIDS IN WATER	PENNINGTON	PENNINGTON	10/12/94	0		NONE
43-M-1017	METH	TOTAL SOLIDS IN WATER	PENNINGTON	PENNINGTON	12/02/94	0		43-M-1017
43-M-1018	METH	VOLUMETRIC MEASUREMENT OF SETTLEABLE SOLIDS IN WATER	PENNINGTON	PENNINGTON	11/18/94	0		NONE
43-M-1020	METH	CHEMICAL OXYGEN DEMAND OF WATER BY REACTOR DIGESTION METHOD WITH COLORIMETRIC DETERMINATION	PENNINGTON	HUDSON	11/10/93	0		NONE
43-M-1021	METH	BICINCHONINATE METHOD FOR TESTING COPPER IN WATER BY SPECTROPHOTOMETER	PENNINGTON	HUDSON	06/04/92	2	11/05/92	NONE
43-M-1022	METH	QUALITY TESTING OF REAGENT-GRADE WATER	PENNINGTON	HUDSON	11/04/92	0		NONE
43-M-1023	METH	BIOCHEMICAL OXYGEN DEMAND (BOD) AND CARBONACEOUS BIOCHEMICAL OXYGEN DEMAND (CBOD)	PENNINGTON	HUDSON	11/04/92	1	08/09/93	43-M-1000
43-M-1024	METH	DETERMINATION OF URANIUM IN WATER: UA-3 LASER INDUCED PHOSPHORESCENCE	PENNINGTON	HUDSON	07/21/94	0		NONE
43-M-1025	METH	AMMONIA NITROGEN IN WATER BY THE NESSLER METHOD	PENNINGTON	HUDSON	07/07/94	0		NONE
43-M-1026	METH	IRON IN WATER BY 1,10 PHENANTHROLINE METHOD	PENNINGTON	HUDSON	07/12/94	0		NONE
43-M-1027	METH	SULFATE IN WATER BY SULFAVER4 METHOD	PENNINGTON	HUDSON	07/08/94	0		NONE
43-M-1028	METH	NITRATE ION-SELECTIVE ELECTRODE METHOD	PENNINGTON	HUDSON	12/13/94	0		NONE
43-M-1029	METH	HEXAVALENT CHROMIUM BY COLORIMETRIC METHOD (DR 3000)	PENNINGTON	HUDSON	01/27/95	0		NONE
43-M-1030	METH	FLUORIDE BY ION-SELECTIVE ELECTRODE METHOD	PENNINGTON	HUDSON	02/14/95	0		NONE
43-M-1031	METH	SOLUBLE URANIUM BY KINETIC PHOSPHORESCENCE ANALYZER (KPA)	PENNINGTON	HUDSON	01/16/95	0		NONE
43-M-1032	METH	PH TESTING OF WATER BY ELECTROMETRIC METHOD WITH THE ORION 920A	PENNINGTON	HUDSON	01/17/95	1	04/04/95	NONE
43-M-1033	METH	PH (HYDROGEN ION) TESTING OF WATER USING ORION 420A	PENNINGTON	HUDSON	01/05/95	0		NONE
43-M-1034	METH	DETERMINATION OF SPECIFIC GRAVITY USING AN ANALYTICAL BALANCE	PENNINGTON	HUDSON	04/12/95	0		NONE
43-M-1035	METH	DETERMINATION OF SPECIFIC GRAVITY - DMA-35 DENSITY METER	PENNINGTON	HUDSON	03/20/95	0		NONE
46-C-101	T.PRO	LAUNDRY OPERATIONS	PENNIX	WEST	09/27/93	0		NONE
46-C-102	T.PRO	CISSEL DRYER OPERATION	PENNIX	WEST	05/13/93	0		NONE

DOCUMENT.NO.	TYPE OF DOCUMENT	TITLE	DOC.OWNER	PTR LAST.NAME	ISSUE DATE	REV. NO.	REVISION DATE	SUPERSEDES
46-C-103	T.PRO	CONTINUOUS BATCH WASHER SYSTEM OPERATION	PENNIX	WEST	06/17/93	0		NONE
46-C-104	T.PRO	CASCADEX WASHER/EXTRACTOR OPERATION	PENNIX	WEST	08/31/93	0		NONE
46-C-106	T.PRO	CONTINUOUS BATCH WASHER (CBW) SYSTEM MANUAL OPERATION	PENNIX	WEST	08/31/93	0		NONE
46-C-107	T.PRO	CISSELL DRYER AND MEPA/HEPA FILTER SYSTEMS OPERATION	PENNIX	WEST	07/12/93	1	12/01/94	NONE
46-C-108	T.PRO	LAUNDRY CLEANING SUPPLIES OPERATIONS	PENNIX	WEST	04/26/95	0		NONE
46-C-109	T.PRO	LUDLUM LAUNDRY MONITOR OPERATION	PENNIX	WEST	09/27/93	0		NONE
46-C-110	T.PRO	LAUNDRY ANCILLARY EQUIPMENT OPERATIONS	PENNIX	WEST	09/27/93	0		NONE
46-C-200	T.PRO	PESTICIDE HANDLING AND APPLICATION OPERATIONS	PENNIX	HIX	10/07/94	0		NONE
46-C-201	T.PRO	DISPOSAL OF NON-PROCESS AREA TRASH	TOWNSEND	DUNBAR	04/08/92	0		NONE
46-C-202	T.PRO	PORTER CLEANING SUPPLIES HANDLING AND REPLACEMENT OPERATIONS	PENNIX	HIX	06/09/94	0		NONE
46-C-203	T.PRO	GENERAL PORTER OPERATIONS	PENNIX	HIX	11/03/93	1	01/14/94	NONE
46-C-301	T.PRO	CLEANING, INSPECTING AND RECONDITIONING RESPIRATORS	PENNIX	KATZ	02/06/95	0		46-C-301
46-C-908	T.PRO	ROOF/ELEVATED STRUCTURE ACCESS	TOWNSEND	CULLEN	07/26/94	0		NONE
46-S-001	A.PRO	ISSUANCE AND CONTROL OF SAFETY SHOES	PENNIX	WEST	09/20/93	0		NONE
50-C-101	T.PRO	PREPARATION AND OFFSITE SHIPMENT OF URANIUM HEXAFLUORIDE LABORATORY CALIBRATION STANDARDS CYLINDERS	GILBERT	ARAGON	07/30/92	1	03/08/93	NONE
50-C-102	T.PRO	CARRIER VEHICLE WEIGHING	GILBERT	BEYMA	05/27/94	0		NONE
50-C-105	T.PRO	RECEIPT OF MIXED/LOW LEVEL WASTE	HAZLEWOOD	HAZLEWOOD	10/01/92	0		50-C-100
50-C-106	T.PRO	ACM WASTE SHIPMENT RECORD PREPARATION	HAZLEWOOD	JOHNS	04/12/93	0		NONE
50-C-107	T.PRO	INSPECTION OF INBOUND CARRIER VEHICLES USED FOR LOW LEVEL RADIOACTIVE WASTE (LLRW), HAZARDOUS WASTE AND/OR PRODUCT OFF-SITE SHIPMENT	ROWE		12/05/94	0		NONE
50-C-108	T.PRO	LOADING LOW LEVEL RADIOACTIVE WASTE (LLRW) CONTAINERS ON FLATBEDS FOR OFF-SITE SHIPMENT	ROWE	STOFFER	12/15/94	0		NONE
50-C-109	T.PRO	LOADING LOW LEVEL RADIOACTIVE WASTE (LLRW) CONTAINERS ON VANS FOR OFF-SITE SHIPMENT	ROWE	STOFFER	12/15/94	0		NONE
50-C-110	T.PRO	RECEIVING RADIOACTIVE AND NON-RADIOACTIVE HAZARDOUS MATERIAL	GILBERT	ARAGON	01/13/93	0		NONE
50-C-111	T.PRO	TRAFFIC DOCUMENTATION FOR SHIPMENT OF LOW LEVEL RADIOACTIVE WASTE (LLRW) TO THE NEVADA TEST SITE	ROWE	GIESSL	04/15/94	0		NONE
50-C-112	T.PRO	PREPARATION OF DOCUMENTATION FOR SHIPMENT OF LOW LEVEL RADIOACTIVE WASTE (LLRW) TO THE NEVADA TEST SITE (NTS)	ROWE	STIERHOFF	04/15/94	0		NONE
50-C-113	A.PRO	INVENTORY CONTROL (STORES) OPERATION	GILBERT	ALLEN	06/30/94	0		NONE
50-C-114	A.PRO	WAREHOUSE OPERATION	GILBERT	ALLEN	06/30/94	0		NONE
50-C-115	T.PRO	PROCESSING MATERIALS THROUGH THE RECEIVING AND INCOMING	ALLEN	ALLEN	04/27/95	0		NONE

DOCUMENT.NO.	TYPE OF DOCUMENT	TITLE	DOC.OWNER	PTR LAST.NAME	ISSUE DATE	REV. NO.	REVISION DATE	SUPERSEDES
		MATERIALS INSPECTION AREA (RIMIA)						
50-C-116	A.PRO	PREPARATION OF MOTOR VEHICLES FOR DISPOSAL	GILBERT	GILBERT	06/24/94	0		NONE
50-C-117	T.PRO	OPERATING MOTOR VEHICLES	GILBERT	GILBERT	06/24/94	0		NONE
50-C-118	A.PRO	CONTROLLING MOTOR VEHICLES	GILBERT	GILBERT	06/24/94	0		NONE
50-C-119	T.PRO	GARAGE SUB-STORES OPERATION	ALLEN	ALLEN	11/23/94	0		NONE
50-C-120	T.PRO	CONSTRUCTION SUB-STORES OPERATION	ALLEN	ALLEN	01/25/95	0		NONE
50-C-121	A.PRO	LAUNDRY SUB-STORES OPERATION	ALLEN	ALLEN	10/18/94	0		NONE
50-C-122	A.PRO	ANALYTICAL LABORATORY SERVICES SUB-STORES OPERATION	ALLEN	ALLEN	10/18/94	0		NONE
50-C-125	A.PRO	GUIDELINES FOR SHIPPING PRECIOUS METALS	GILBERT	BAYNE	02/17/95	0		NONE
50-C-127	A.PRO	PROCESSING RAIL OR TRUCK SHIPMENTS INVOLVING DEMURRAGE AND/OR DETENTION CHARGES	GILBERT	BAYNE	03/01/95	0		NONE
50-C-128	A.PRO	AIR SHIPMENT OF DANGEROUS GOODS (HAZARDOUS MATERIALS)	GILBERT	BAYNE	03/31/95	0		NONE
50-C-129	T.PRO	FUEL LOADING/UNLOADING FACILITY	STAMPER	COPELAND	04/24/95	0		NONE
55-C-100	T.PRO	OPERATION OF SUMP PUMP IN DECONTAMINATION & DECOMMISSIONING (D&D) BUILDING	PERKINS	COMBS	06/25/93	1	11/30/94	NONE
55-C-101	T.PRO	OPERATION OF STEAM/DETERGENT CLEANER IN DECONTAMINATION & DECOMMISSIONING (D&D) BUILDING	PERKINS	COMBS	06/25/93	0		NONE
55-C-103	T.PRO	HIGH PRESSURE WASHER OPERATION IN DECONTAMINATION AND DECOMMISSIONING (D&D) BUILDING	PERKINS	KRAUS	03/14/94	0		NONE
55-C-104	T.PRO	EDX JETPAC ULTRA-HIGH-PRESSURE WASHER SYSTEM OPERATION	PERKINS	COMBS	09/19/94	0		NONE
55-C-106	T.PRO	BUILDING 78 PROCESS AIR HANDLING SYSTEM OPERATION	PERKINS	PALMER	12/06/94	0		NONE
65-C-103	T.PRO	CASCADE BREATHING AIR SYSTEM	PERKINS	HUEY	09/21/94	0		NONE
65-C-201	T.PRO	K65 SILO NUMBERS 1 AND 2 AREA EMERGENCIES	GLASSEY	GLASSEY	09/10/90	1	05/13/91	65-C-107
66-C-101	T.PRO	OPERATION OF K65 RADON TREATMENT SYSTEM	GLASSEY	GLASSEY	07/03/91	1	12/09/92	NONE
66-C-909	T.PRO	RADON TREATMENT SYSTEM EMERGENCIES	GLASSEY	GLASSEY	09/11/90	1	05/13/91	NONE
D07-00-001	A.PRO	OFFSITE FURNITURE WAREHOUSE OPERATION	ALLEN	HAHN	04/27/95	0		NONE
D10-00-001	A.PRO	INTERIM DOCUMENT (16)	TRUJILLO	DAUGHERTY	02/18/93	0		NONE
D10-00-002	A.PRO	REMEDIATION SUPPORT OPERATIONS LESSONS LEARNED PROGRAM (14)	TRUJILLO	HOLLOWAY	01/16/95	0		PO-D-027
D10-00-005	A.PRO	SUPERVISOR PROCEDURE RECORD BOOK STATION MAINTENANCE/PERSONNEL TRAINING	TRUJILLO	DAUGHERTY	06/15/94	0		PO-D-009
D10-00-006	A.PRO	QUALITY CONTROL INTERLABORATORY DATA COMPARABILITY PROGRAM	TRUJILLO	CAMPBELL	03/29/94	0		NONE
D10-00-010	A.PRO	IDENTIFICATION OF RSO QUALITY RECORDS	TRUJILLO	PARMER	05/31/94	0		NONE
D10-00-012	A.PRO	RSO INCIDENT ANALYSIS AND REPORTING	TRUJILLO	TRUJILLO	03/14/95	0		NONE
D10-00-014	A.PRO	RSO COMMITMENT TRACKING SYSTEM	TRUJILLO	HOLLIDAY	02/07/95	0		NONE

DOCUMENT.NO.	TYPE OF DOCUMENT	TITLE	DOC.OWNER	PTR LAST.NAME	ISSUE DATE	REV. NO.	REVISION DATE	SUPERSEDES
D10-00-015	A.PRO	RSO VENDOR/SUPPLIER DOCUMENT CONTROL REQUIREMENTS	TRUJILLO	DAUGHERTY	03/10/95	0		NONE
D10-00-020	A.PRO	REMEDIATION SUPPORT OPERATIONS DIVISION DOCUMENT SYSTEM	TRUJILLO	DAUGHERTY	09/26/94	0		PO-D-002 PO-D-003 PO-D-004 PO-D-026
D10-02-004	A.PRO	SELF-ASSESSMENT ANALYSIS AND REPORT	EMMERT	HOLLOWAY	02/24/95	0		NONE
D10-02-005	A.PRO	CONDUCT OF INTERNAL ASSESSMENTS FOR THE RSO SELF-ASSESSMENT PROGRAM	EMMERT	HOLLOWAY	11/15/94	0		NONE
D10-05-001	A.PRO	SAFE SHUTDOWN PROGRAM ENERGY ISOLATION PROCEDURE	KLEIN	MORRIS	02/08/95	0		NONE
D10-20-001	A.PRO	RSO CONDUCT OF OPERATIONS POLICY OPERATIONS ORGANIZATION AND ADMINISTRATION	TRUJILLO	BRADBURNE	04/13/95	0		D10-00-007 PO-D-014
D10-20-002	A.PRO	SHIFT ROUTINES AND OPERATING PRACTICES	TRUJILLO	BRADBURNE	04/13/95	0		PO-D-015
D10-20-003	A.PRO	CONTROL AREA ACTIVITIES	TRUJILLO	BRADBURNE	12/12/94	1	04/13/95	NONE
D10-20-004	A.PRO	COMMUNICATIONS	TRUJILLO	BRADBURNE	04/13/95	0		PO-D-016
D10-20-005	A.PRO	CONTROL OF ON-SHIFT TRAINING	TRUJILLO	BRADBURNE	12/12/94	1	04/13/95	NONE
D10-20-006	A.PRO	INVESTIGATION OF ABNORMAL EVENTS	TRUJILLO	BRADBURNE	12/12/94	1	04/13/95	PO-D-017
D10-20-007	A.PRO	NOTIFICATIONS	TRUJILLO	BRADBURNE	12/12/94	1	04/13/95	PO-D-018
D10-20-008	A.PRO	CONTROL OF EQUIPMENT AND SYSTEM STATUS	TRUJILLO	BRADBURNE	04/13/95	0		PO-D-019
D10-20-009	A.PRO	LOCKOUTS AND TAGOUTS	TRUJILLO	BRADBURNE	12/12/94	1	04/13/95	NONE
D10-20-010	A.PRO	INDEPENDENT VERIFICATION	TRUJILLO	BRADBURNE	12/12/94	1	04/13/95	PO-D-020
D10-20-011	A.PRO	LOGKEEPING	TRUJILLO	BRADBURNE	12/12/94	1	04/13/95	PO-D-021
D10-20-012	A.PRO	OPERATIONS TURNOVER	TRUJILLO	BRADBURNE	04/13/95	0		PO-D-022
D10-20-013	A.PRO	OPERATIONS ASPECTS OF FACILITY CHEMISTRY AND UNIQUE PROCESSES	TRUJILLO	BRADBURNE	12/12/94	1	04/13/95	NONE
D10-20-014	A.PRO	REQUIRED READING	TRUJILLO	BRADBURNE	04/13/95	0		PO-D-032
D10-20-015	A.PRO	TIMELY ORDER TO OPERATORS	TRUJILLO	BRADBURNE	04/13/95	0		
D10-20-016	A.PRO	OPERATIONS PROCEDURES	TRUJILLO	BRADBURNE	04/13/95	0		PO-D-011
D10-20-017	A.PRO	OPERATOR AID POSTINGS	TRUJILLO	BRADBURNE	04/13/95	0		PO-D-024
D10-20-018	A.PRO	EQUIPMENT AND PIPING LABELING	TRUJILLO	BRADBURNE	12/12/94	1	04/13/95	PO-D-025 D10-00-008
D22-00-001	A.PRO	WASTE PROGRAMS MANAGEMENT DIVISION CONDUCT OF OPERATIONS POLICY	WEST	OBRIEN	07/08/94	1	11/14/94	NONE
M-100	MANUAL	RSO DIVISION CONDUCT OF OPERATIONS MANUAL	TRUJILLO	BRADBURNE	12/12/94	0		NONE

REMEDIATION SUPPORT OPERATIONS
PROGRAM INDEX

DOCUMENT.NO.	TYPE OF DOCUMENT	TITLE	DOC.OWNER	PTR LAST.NAME	ISSUE DATE	REV. NO.	REVISION DATE	SUPERSEDES
M-101	MANUAL	STANDARD FOR CONDUCT OF OPERATIONS AT THE FEED MATERIALS PRODUCTION CENTER FACILITY ASSESSMENT RECORDS	TRUJILLO	HEID	08/24/90	0		NONE
M-102	MANUAL	(RSO) SITE SERVICES TRANSPORTATION REQUIREMENTS MANUAL	GILBERT	ARAGON	01/31/92	1	09/12/93	NONE
M-103	MANUAL	STANDING ORDERS FOR BOILER PLANT OPERATIONS	PENNINGTON	NABER	06/14/94	2		NONE
M-104	MANUAL	STANDING ORDERS FOR WATER TREATMENT PLANT OPERATIONS	PENNINGTON	HENSLEY	06/15/94	2		NONE
M-105	MANUAL	UTILITIES SERVICES TRAINING AND QUALIFICATION PROGRAM	PENNINGTON	PENNINGTON	03/25/94	1		NONE
M-106	MANUAL	STANDING ORDERS FOR WASTEWATER FACILITY OPERATIONS	PENNINGTON	LESLIE	06/14/94	1		NONE
M-107	MANUAL	TRANSPORTATION REQUIREMENTS FOR SHIPMENT OF SAMPLES TO OFF-SITE LABORATORIES	GILBERT	ARAGON	02/11/94	0		NONE
M-108	MANUAL	SAFE SHUTDOWN IMPLEMENTATION PROJECT MANAGER'S STANDING ORDERS	KLEIN	HENRY	01/16/95	0		NONE
M-109	MANUAL	OPERATION OF THE PLANT 8 WASTE WATER PROCESSING AND VOLATILE ORGANIC COMPOUNT (VOC) TREATMENT SYSTEMS	FRANCE	FRANCE	04/11/94	0		NONE
M-111	MANUAL	UNH NEUTRALIZATION PROJECT	PERKINS	HUEY	05/27/94	0		NONE
M-113	MANUAL	UNH PROJECT ORR PREPARATION SELF-ASSESSMENT PLAN	BRETTSCHNEI	HOLLOWAY	12/15/94	0		NONE
M-114	MANUAL	REMEDIATION SUPPORT OPERATIONS DIVISION SELF-ASSESSMENT PROGRAM PLAN	TRUJILLO	HOLLOWAY	01/16/95	0		NONE
M-115	MANUAL	FACILITY OWNER'S STANDING ORDERS FOR PLANT 2/3 URANYL NITRATE (UNH) NEUTRALIZATION SYSTEM	BRETTSCHNEI	HUEY	11/23/94	1	03/21/95	NONE
M-116	MANUAL	FACILITY OWNER'S STANDING ORDERS FOR PLANT 8 FILTRATION AND VOLATILE ORGANIC COMPOUND (VOC) TREATMENT SYSTEMS	BRETTSCHNEI	HUEY	11/23/94	1	03/21/95	NONE
M-117	MANUAL	REMEDIATION SUPPORT OPERATIONS DIVISION AND WASTE PROGRAMS MANAGEMENT DIVISION TRAINING QUALIFICATION PROGRAM HAZARDOUS WASTE TECHNICIAN GROUP (HAZWAT) AND HAZARDOUS MATERIAL TRANSPORTATION GROUP (HAZMAT)	TRUJILLO	WELTON	01/16/95	1	04/03/95	NONE
M-119	MANUAL	REMEDIATION SUPPORT OPERATIONS TRAINING AND QUALIFICATION PLAN	TRUJILLO	WELTON	01/16/95	0		NONE
M-120	MANUAL	FERMCO FACILITY OWNER'S PROGRAM MANUAL	BLANKENSHIP	HUNDLEY	01/06/95	0		NONE
M-121	MANUAL	RSO CONOPS APPLICABILITY MATRIX URANYL NITRATE HEXAHYDRATE (UNH) NEUTRALIZATION PROJECT	TRUJILLO	BRADBURNE	12/12/94	0		NONE
M-122	MANUAL	REMEDIATION SUPPORT OPERATIONS DIVISION MAINTENANCE TRAINING PROGRAM DESCRIPTION	TRUJILLO	BURNETTE	01/16/95	0		NONE
M-123	MANUAL	STANDING ORDERS FOR ADVANCED WASTE WATER TREATMENT FACILITY (AWWT) OPERATIONS	HUGHES	HUGHES	02/13/95	0		NONE

REMEDIATION SUPPORT OPERATIONS
PROGRAM INDEX

DOCUMENT.NO	TYPE OF DOCUMENT	TITLE	DOC.OWNER	PTR LAST.NAME	ISSUE DATE	REV. NO.	REVISION DATE	SUPERSEDES
M-125	MAN	PLANT 8 SUPERVISOR AND OPERATOR QUALIFICATION PROGRAM	TRUJILLO	WELTON	05/05/95	0		NONE
M-127	MAN	STANDING ORDERS FOR HF TANK CAR PROJECT OPERATIONS	KRAUS	KRAUS	05/01/95	0		NONE
OP-0101	SITE	TESTING FERMCO COMMERCIAL MOTOR VEHICLE DRIVERS FOR THE USE OF CONTROLLED SUBSTANCES AND ALCOHOL	PAINE	BALLINGER	04/28/95	0		NONE
OP-0102	SITE	FACILITY SAFETY ASSESSMENT PROGRAM (FSAP)	PAINE	BECRAFT	03/29/95	0		20-C-401
OP-0104	MAN	FERMCO MOTOR CARRIER PROGRAM	PAINE	CULLEN	04/28/95	0		NONE
PO-D-006	T.PRO	CALCULATION OF DRUM EQUIVALENTS FOR FMPC WASTE VOLUMES	PERKINS	WEICHOLD	02/17/88	0		NONE
PO-D-008	A.PRO	OPERATIONS PROJECTS WORK PROGRAM	TRUJILLO	DAUGHERTY	12/21/88	0		NONE
PO-D-012	A.PRO	FACILITY/PROCESS STARTUP	TRUJILLO	HEID	12/17/90	0		NONE
PO-D-013	A.PRO	SAFETY AND HOUSEKEEPING	TRUJILLO	HEID	09/15/89	1	05/10/91	NONE
PO-D-035	A.PRO	SHIPMENT OF LOW LEVEL RADIOACTIVE WASTE (LLRW) REQUIREMENTS	ROWE	ROWE	02/28/92	0		NONE
PO-S-01-001	T.PRO	STORAGE AND HANDLING OF EMPTY LOW LEVEL RADIOACTIVE WASTE CONTAINERS	ROWE	ROWE	09/30/87	0		NONE
PO-S-01-002	A.PRO	INTERNAL AUDIT PROGRAM (5480.1A & 5482.1A)	PERKINS		09/29/87	0		NONE
PO-S-01-004	T.PRO	COAL BUNKER FIRE CASUALTY	PENNINGTON	NABER	03/19/93	0		43-C-416
PO-S-03-001	A.PRO	REAL PROPERTY FACILITIES INSPECTION	PERKINS		11/04/88	0		NONE
PO-S-04-001	T.PRO	EMISSION CONTROL ACTION PROGRAM AIR POLLUTION EMERGENCY EPISODES	PENNINGTON	NABER	04/26/93	0		NONE
PO-S-04-003	A.PRO	VIOLATION OPACITY REPORTING	PENNINGTON	NABER	01/31/92	0		NONE
PO-S-04-005	A.PRO	RSO WATER TREATMENT PLANT LABORATORY QUALITY ASSURANCE PLAN	PENNINGTON	PENNINGTON	08/13/93	1	12/13/93	DPL-1000
PO-S-04-006	T.PRO	AERATION FACILITY	PENNINGTON	BUTTERFIELD	08/17/93	0		NONE
PO-S-04-007	T.PRO	RECOVERY WELL FIELD	PENNINGTON	BUTTERFIELD	08/06/93	1		NONE
WO1	MANUAL	FEMP APPLICATION TO SHIP WASTE TO THE NTS	GIESSL	STOFFER	05/01/89	5.1	12/01/93	

CIO LIST

REMEDIATION SUPPORT OPERATIONS
PROGRAM INDEX

CIO.NO	DOCUMENT AFFECTED	TITLE	DOC.OWNER	EFFECTIVE DATE	EXPIRATION DATE
C94-027	20-C-918	PREPARATION FOR AND MOVEMENT OF UNVENTED DRUMS	PETERS	06/30/94	12/30/94
C94-185	D10-00-002	REMEDIATION SUPPORT OPERATIONS LESSONS LEARNED PROGRAM	TRUJILLO	10/12/94	04/12/95
C94-186	D10-00-002	REMEDIATION SUPPORT OPERATIONS LESSONS LEARNED PROGRAM	TRUJILLO	10/12/94	04/12/95
C94-191	N/A	MEASUREMENTS OF OUTAGES OF PLANT 2/3 TANKS	GARRETT	08/25/94	02/25/95
C94-209	43-C-304	GRAVER WATER SOFTNERS OPERATION	PENNINGTON	09/28/94	03/28/95
C94-210	43-C-304	GRAVER WATER SOFTNERS OPERATION	PENNINGTON	09/28/94	03/28/95
C94-211	43-C-304	GRAVER WATER SOFTNERS OPERATION	PENNINGTON	09/28/94	03/28/95

TCN LIST

REMEDIATION SUPPORT OPERATIONS
PROGRAM INDEX

TCN.NO.	DOC. AFFECTED	AFF. PG	TITLE	SUPERVISOR	EFFECTIVE DATE	EXPIRATION DATE	EFFECTIVE. PERIOD
0002	08-C-200	3	PLANT 8 PERCHED GROUNDWATER VOLATILE ORGANIC COMPOUND (VOC) TREATMENT SYSTEM	BISCHOFF	10/06/94	04/06/95	180
0009	43-C-340	2	AWWT PHASE I AND II OPERATIONS	LESLIE	10/10/94	04/10/95	180
0010	43-C-340	5	AWWT PHASE I AND II OPERATIONS	LESLIE	10/10/94	04/10/95	180
0011	43-C-340	7	AWWT PHASE I AND II OPERATIONS	LESLIE	10/10/94	04/10/95	180
0012	43-C-903	3	SOUTH PLUME INTERIM TREATMENT (SPIT) SYSTEM OPERATION	HALCOMB	10/14/94	04/14/95	180
0015	43-C-903	2	SOUTH PLUME INTERIM TREATMENT (SPIT) SYSTEM OPERATION	HALCOMB	10/14/94	04/14/95	180
0016	43-C-326	5	STORMWATER RETENTION BASIN CONTROL SYSTEM OPERTION	PENNINGTON	10/14/94	04/14/95	180
0017	43-C-335	3	INTERIM ADVANCED WASTE WATER TREATMENT (STORMWATER RETENTION BASIN) SYSTEM OPERATION	HALCOMB	10/14/94	04/14/95	180
0018	43-C-326	3	STORMWATER RETENTION BASIN CONTROL SYSTEM OPERATION	HALCOMB	10/14/94	04/14/95	180
0022	08-C-602	68	LARGE EIMCO FILTER OPERATION - PLANT 8 WASTEWATER PROCESSING SYSTEM	CONNER	11/03/94	04/03/95	150
0031	50-C-111	2	TRAFFIC DOCUMENTATION FOR SHIPMENT OF LOW LEVEL RADIOACTIVE WASTE (LLRW) TO THE NEVADA TEST SITE	CAIN	10/10/94	04/10/95	180
0032	50-C-112	2	PREPARATION OF DOCUMENTATION FOR SHIPMENT OF LOW LEVEL RADIOACTIVE WASTE (LLRW) TO TEH NEVADA TEST SITE (NTS)	STIERHOFF	10/10/94	04/10/95	180
0040	20-C-616	31	INSPECTION OF HAZARDOUS WASTE MANAGEMENT UNITS	PALETTA	11/04/94	05/04/95	180
0041	20-C-616	62	INSPECTION OF HAZARDOUS WASTE MANAGEMENT UNITS	PALETTA	11/04/94	05/04/95	180
0042	08-C-602	48	LARGE EIMCO FILTER OPERATION - PLANT 8 WASTEWATER PROCESSING SYSTEM	RUTHERFORD	10/17/94	04/17/95	180
0047	20-C-401	6	FACILITY SAFETY ASSESSMENT PROGRAM	BECRAFT	11/04/94	05/04/95	180
0052	46-C-203	6	GENERAL PORTER OPERATIONS	BURNS	11/18/94	05/18/95	180
0053	02-C-923	6	TRASH BALER OPERATION	PALETTA	12/19/94	06/19/95	180
0054	50-C-111	8	TRAFFIC DOCUMENTATION FOR SHIPMENT OF LOW LEVEL RADIOACTIVE WASTE (LLRW) TO THE NEVADA TEST SITE	CAIN	12/01/94	05/30/95	180
0055	50-C-111	73	TRAFFIC DOCUMENTATION FOR SHIPMENT OF LOW LEVEL RADIOACTIVE WASTE (LLRW) TO THE NEVADA TEST SITE	CAIN	12/01/94	05/30/95	180
0059	D10-00-020	30	REMEDIATION SUPPORT OPERATIONS DIVISION DOCUMENT SYSTEM	DAUGHERTY	12/09/94	06/09/95	180
0064	46-C-203	6	GENERAL PORTER OPERATIONS	HIX	01/03/95	02/03/95	30
0065	20-C-700	5	NORCLEAN PORTABLE VACUUM OPERATION	HOWARD	01/03/95	07/03/95	180
0066	20-C-700	1	NORCLEAN PORTABLE VACUUM OPERATION	HOWARD	01/03/95	07/03/95	180
0068	D10-00-020	4	REMEDIATION SUPPORT OPERATIONS DIVISION DOCUMENT SYSTEM	DAUGHERTY	01/03/95	07/03/95	180
0069	PO-S-04-005	3-3	RSO WATER TREATMENT PLANT LABORATORY QUALITY ASSURANCE PLAN	HUDSON	01/03/95	07/03/95	180

TCN.NO.	DOC. AFFECTED	AFF. PG	TITLE	SUPERVISOR	EFFECTIVE DATE	EXPIRATION DATE	EFFECTIVE. PERIOD
0070	PO-S-04-005	9-3	RSO WATER TREATMENT PLANT LABORATORY QUALITY ASSURANCE PLAN	HUDSON	01/03/95	07/03/95	180
0071	PO-S-04-005	10-1	RSO WATER TREATMENT PLANT LABORATORY QUALITY ASSURANCE PLAN	HUDSON	01/03/95	07/03/95	180
0072	20-C-617	4	DISPOSAL OF CONTROLLED AREA OFFICE TRASH	ALLMON	01/03/95	02/03/95	30
0074	43-C-341	7	ADVANCED WASTE WATER TREATMENT BASELINE VALVE LINE-UP	LESLIE	11/28/94	05/28/95	180
0076	D10-00-020	20	REMEDIATION SUPPORT OPERATIONS DIVISION DOCUMENT SYSTEM	DAUGHERTY	01/03/95	07/03/95	180
0077	D10-00-020	24	REMEDIATION SUPPORT OPERATIONS DIVISION DOCUMENT SYSTEM	DAUGHERTY	01/03/95	07/03/95	180
0078	20-C-400	6	PREPARATION FOR, AND REMOVAL OF, SNOW AND/OR ICE	BLANKENSHIP	01/05/95	07/05/95	180
0080	02-C-309	7	UNH LEAK INSPECTION, NOTIFICATION, AND CORRECTIVE ACTION	KIRBY	02/20/95	08/20/95	180
0083	08-C-608	12	EAST EIMCO FILTER OPERATION	MCWHORTER	01/13/95	06/13/95	150
0084	08-C-608	14	EAST EIMCO FILTER OPERATION	MCWHORTER	01/13/95	06/13/95	150
0085	08-C-608	19	EAST EIMCO FILTER OPERATION	MCWHORTER	01/13/95	06/13/95	150
0086	08-C-608	20	EAST EIMCO FILTER OPERATION	MCWHORTER	01/13/95	06/13/95	150
0087	08-C-608	9	EAST EIMCO FILTER OPERATION	MCWHORTER	01/13/95	06/13/95	150
0088	08-C-609	9	WEST EIMCO FILTER OPERATION	MCWHORTER	01/13/95	06/13/95	150
0089	08-C-609	12	WEST EIMCO FILTER OPERATION	MCWHORTER	01/13/95	06/13/95	150
0090	08-C-609	14	WEST EIMCO FILTER OPERATION	MCWHORTER	01/13/95	06/13/95	150
0092	08-C-609	19	WEST EIMCO FILTER OPERATION	MCWHORTER	01/13/95	06/13/95	150
0093	08-C-609	20	WEST EIMCO FILTER OPERATION	MCWHORTER	01/13/95	06/13/95	150
0098	02-C-310	9	IN-SITU NEUTRALIZATION ON UNH STORAGE TANKS	KIRBY	04/19/95	10/19/95	180
0107	02-C-309	6	UNH LEAK INSPECTION, NOTIFICATION, AND CORRECTIVE ACTION	HUEY	03/16/95	09/01/95	175
0108	02-C-100	3	PLANT 2/3 SUMP OPERATION	KIRBY	03/16/95	09/01/95	175
0113	02-C-309	6	UNH LEAK INSPECTION, NOTIFICATION, AND CORRECTIVE ACTION	KIRBY	02/20/95	08/20/95	180
0126	50-C-107	5	INSPECTION OF INBOUND CARRIER VEHICLES USED FOR LOW LEVEL RADIOACTIVE WASTE (LLRW), HAZARDOUS WASTE AND/OR PRODUCT OFF-SITE SHIPMENT	VIZEDOM	01/13/95	07/13/95	180
0127	50-C-107	11	INSPECTION OF INBOUND CARRIER VEHICLES USED FOR LOW LEVEL RADIOACTIVE WASTE (LLRW), HAZARDOUS WASTE AND/OR PRODUCT OFF-SITE SHIPMENT	VIZEDOM	01/13/95	07/13/95	180
0128	50-C-109	6	LOADING LOW LEVEL RADIOACTIVE WASTE (LLRW) CONTAINERS ON VANS FOR OFF-SITE SHIPMENT	STOFFER	01/13/95	07/13/95	180
0129	43-C-341	48	ADVANCED WASTE WATER TREATMENT BASELINE VALVE LINE-UP	LESLIE	12/30/94	03/30/95	90
0130	43-C-341	52	ADVANCED WASTE WATER TREATMENT BASELINE VALVE LINE-UP	LESLIE	12/30/94	03/30/95	90
0131	11-C-217	3	OPERATION OF PILOT PLANT SUMP SYSTEM	GLASSMEYER	03/30/95	03/30/95	180
0134	43-C-341	68	ADVANCED WASTE WATER TREATMENT BASELINE VALVE LINE-UP	LESLIE	11/28/94	05/28/95	180

TCN.NO.	DOC. AFFECTED	AFF. PG	TITLE	SUPERVISOR	EFFECTIVE DATE	EXPIRATION DATE	EFFECTIVE. PERIOD
0135	43-C-341	78	ADVANCED WASTE WATER TREATMENT BASELINE VALVE LINE-UP	LESLIE	11/28/94	05/28/95	180
0156	43-C-327	9	EFFLUENT TREATMENT SYSTEM NORMAL	LESLIE	01/26/95	07/26/95	180
0157	43-C-327	12	EFFLUENT TREATMENT SYSTEM NORMAL	LESLIE	01/26/95	07/26/95	180
0165	08-C-602	51	LARGE EIMCO FILTER OPERATION - PLANT 8 WASTEWATER PROCESSING SYSTEM	MCWHORTER	02/17/95	08/17/95	180
0166	08-C-602	54	LARGE EIMCO FILTER OPERATION - PLANT 8 WASTEWATER PROCESSING SYSTEM	MCWHORTER	02/17/95	08/17/95	180
0167	08-C-602	56	LARGE EIMCO FILTER OPERATION - PLANT 8 WASTEWATER PROCESSING SYSTEM	MCWHORTER	02/17/95	08/17/95	180
0168	08-C-602	59	LARGE EIMCO FILTER OPERATION - PLANT 8 WASTEWATER PROCESSING SYSTEM	MCWHORTER	02/17/95	08/17/95	180
0169	08-C-602	61	LARGE EIMCO FILTER OPERATION - PLANT 8 WASTEWATER PROCESSING SYSTEM	MCWHORTER	02/17/95	08/17/95	180
0170	08-C-602	65	LARGE EIMCO FILTER OPERATION - PLANT 8 WASTEWATER PROCESSING SYSTEM	MCWHORTER	02/17/95	08/17/95	180
0171	02-C-309	9	UNH LEAK INSPECTION, NOTIFICATION, AND CORRECTIVE ACTION	HUEY	03/01/95	08/01/95	150
0174	02-C-309	7	UNH LEAK INSPECTION, NOTIFICATION, AND CORRECTIVE ACTION	HUEY	03/01/95	08/01/95	150
0180	D10-00-014	4	RSO COMMITMENT TRACKING SYSTEM	WILLIS	04/13/95	10/13/95	180
0202	02-C-300	8					
0203	20-C-616	59	INSPECTION OF HAZARDOUS WASTE MANAGEMENT UNITS	HARPER	04/10/95	10/10/95	180
0204	20-C-616	3	INSPECTION OF HAZARDOUS WASTE MANAGEMENT UNITS	HARPER	04/10/95	10/10/95	180
0205	D10-00-020	27	REMEDIATION SUPPORT OPERATIONS DIVISION DOCUMENT SYSTEM	DAUGHERTY	04/03/95	10/03/95	180
0206	50-C-109	5	LOADING LOW LEVEL RADIOACTIVE WASTE (LLRW) CONTAINERS ON VANS FOR OFF-SITE SHIPMENT	STIERHOFF	04/17/95	07/01/95	75
0207	50-C-109	7	LOADING LOW LEVEL RADIOACTIVE WASTE (LLRW) CONTAINERS ON VANS FOR OFF-SITE SHIPMENT	STIERHOFF	04/17/95	07/01/95	75

6989

NON-CONTROLLED COPY

CONTROL NO. [redacted]
SITE PROCEDURE QA-0001 (SSOP-0023)
REVISION NO. 5

PROCESSING DEVIATION AND CORRECTIVE ACTION REPORTS

Effective Date: 02-16-95

Originator (Subject Expert): _____
Date

Checker Concurrence: _____
Date

APPROVED BY: _____ 3/13/95
Richard E. Kline, FAM of Quality Assurance Date

FERNALD ENVIRONMENTAL MANAGEMENT PROJECT

Fernald Environmental Restoration Management Corporation
P. O. Box 538704
Cincinnati, Ohio 45253-8704

6989

CONTROL NUMBER: PER-0411
SITE STANDARD OPERATING PROCEDURE
DOCUMENT NO. SSOP-0023
REVISION NO. 5

PROCESSING DEVIATION AND CORRECTIVE ACTION REPORTS

SSOP-0023

Effective Date: 02-16-95

AUTHORIZED BY: _____ 1-30-95
D. Ofte, President Date

FERNALD ENVIRONMENTAL MANAGEMENT PROJECT

Fernald Environmental Restoration Management Corporation
P. O. Box 538704
Cincinnati, Ohio 45253-8704

Fernald Environmental FERMCO Restoration Management Corporation	Title: **PROCESSING DEVIATION AND CORRECTIVE ACTION REPORTS**
	DOCUMENT NO: SSOP-0023 REVISION NO: 5
	Effective Date: 02-16-95 — Page 1 of 30

TABLE OF CONTENTS

SECTION	TITLE	PAGE
1.0	PURPOSE	3
2.0	SCOPE	3
3.0	DEFINITIONS	3
4.0	RESPONSIBILITIES	6
5.0	GENERAL	7
6.0	PREREQUISITES	9
6.1	INDUSTRIAL SAFETY AND HEALTH REQUIREMENTS	9
6.2	TRAINING REQUIREMENTS	9
7.0	PROCEDURE	9
7.1	PROCESSING DEVIATION REPORTS (DRs)	9
7.2	PROCESSING CORRECTIVE ACTION REPORTS (CARs)	15
8.0	APPLICABLE DOCUMENTS	20
8.1	DRIVERS	20
8.2	REFERENCES	20

LIST OF FIGURES

FIGURE	TITLE	PAGE
1	DEVIATION REPORT (DR)	21
2	HOLD FOR QA/QC RELEASE TAG	23
3	CORRECTIVE ACTION REPORT (CAR)	24
4	SUGGESTIONS FOR EVALUATING A ROOT CAUSE	26
5	MATRIX OF ROOT CAUSES	28

Fernald Environmental FERMCO Restoration Management Corporation	Title: **PROCESSING DEVIATION AND CORRECTIVE ACTION REPORTS**	
	DOCUMENT NO: SSOP-0023 REVISION NO: 5	
	Effective Date: 02-16-95	Page 2 of 30

RECORD OF ISSUE/REVISIONS

DATE	REV. NO	DESCRIPTION AND AUTHORITY
06-27-91	0	Issued to identify the assigned responsibilities and required actions for identifying, documenting, and providing dispositions for deviations and corrective actions observed during audits and reviews per Request No. P91-220, initiated by M. A. Malone.
02-04-92	1	Minor revision to incorporate temporary revisions T91-021 through T91-025 per Request Nos. S92-012 through S92-016, initiated by M. Malone. This document supersedes SSOP-0023, dated 06-27-91, Revision 0.
06-25-92	2	Minor revision to reflect organizational changes per Request No. S92-048, initiated by M. Malone. This document supersedes SSOP-0023, dated 02-04-92, Revision 1.
10-13-93	3	Major revision to reflect organizational changes per Request No. S93-119, initiated by Linda Lockerd. This document supersedes SSOP-0023, dated 06-25-92, Rev 2.
12-16-94	4	Major revision to incorporate SSOP-1020, "QA/QC Tagging," into this procedure and reflect the latest changes in the DR and CAR process per Request No. S94-074, initiated by Linda Lockerd. This document supersedes SSOP-0023, dated 10-13-93, Rev. 3.
02-06-95	5	Minor revision to add Unreviewed Safety Question (USQ) information per Request No. S94-214, initiated by L. Lockerd. This document supersedes SSOP-0023, dated 12-16-94, Rev. 4.

NOTE: Change bars and shading from the previous revision have been removed. The latest changes to this document are indicated by a "change bar" (▌) in the right margin. Changes are also shaded in the text when needed to help identify changes.

1.0 PURPOSE

This document describes the process to ensure that conditions and potential conditions adverse to quality at the Fernald Environmental Management Project (FEMP) are documented on Deviation Reports (DRs) and Corrective Action Reports (CARs), controlled, analyzed, evaluated for significance, corrected in a timely fashion, brought to the attention of management, and tracked.

DRs and CARs are tools used by management to control conditions adverse to quality and reviewed as a means of improving processes and systems.

2.0 SCOPE

This procedure applies to all FERMCO personnel and subcontractors who identify a deviation from applicable requirements and all FERMCO personnel involved in the correction process.

3.0 DEFINITIONS

Administrator of Deviation and Corrective Action Reports (DRs and CARs) - The Quality Assurance (QA) Representative responsible for maintaining the database and records for the DR and CAR programs.

Condition Adverse to Quality - An all-inclusive term used in reference to any of the following: failures, malfunctions, deficiencies, defective items, and nonconformances. A significant condition adverse to quality is one which, if uncorrected, could have a serious effect on safety or operability.

Corrective Action - Measures taken to rectify significant conditions adverse to quality, violations of regulatory requirements, or deviations from specified requirements, to preclude repetition of the condition identified.

Corrective Action Report (CAR) - A form used by the QA Division for the identification, disposition, verification of corrective action, and closure of a condition identified as significantly adverse to quality, a recurring nonconformance, or a programmatic breakdown.

Deviation - A departure from specified requirements.

Deviation Report (DR) - A form used to document the identification, disposition, verification of resolution, and closure of a specific deviation.

Disposition - The quality control term describing action necessary to resolve a specific nonconformance, which includes the following:

3.0 **DEFINITIONS** (cont.)

- Accept-As-Is - A disposition permitted when it can be established that the item is satisfactory for its intended use. (Written justification by a cognizant engineer must be submitted with this disposition.)

  NOTE: An unsupported belief, opinion, or recommendation is not an acceptable technical justification.

- Reject - The disposition declaring an item either economically or technically infeasible to accept-as-is, rework, or repair. Rejected items shall be scrapped, identified or altered so as to be inapplicable for their original use, or returned to the supplier.

- Repair - The disposition of restoring a nonconforming characteristic to a condition such that the item functions reliably and safely, even though that item still does not conform to the original requirement. (Written justification by a cognizant engineer must be submitted with this disposition.)

- Rework - The disposition by which an item is made to conform to original requirements by completion or correction.

- Other - The disposition to describe the specific actions to be taken (e.g., revise procedure, develop procedure, provide training) to resolve the nonconformance when none of the above dispositions are applicable.

Evaluator - A qualified individual who works for QA and/or supports the QA function and physically verifies acceptable completion and resolution of a DR or CAR. This person shall be trained in accordance with this document and technically competent in the specific area he/she is evaluating. The verifier should be the preparer of the DR or CAR whenever possible.

Event - Any real-time occurrence or significant deviation from planned or expected behavior that could endanger or adversely affect people, property, or the environment (see ED-0001).

External Audit - A formal examination of FEMP activities, planned and conducted by an organization other than FERMCO (e.g., the DOE or Fluor Daniel).

Group Tagging - Placing a material or item(s) in a controlled, segregated, and clearly identified hold area; erecting barriers around a material, item(s), or system and affixing a tag to the barrier or mounting the tag on a post or placard within the barrier.

3.0 **DEFINITIONS** (cont.)

Hold for QA/QC Release Tag (commonly called Hold Tag) - A tag that is affixed to material, an item(s), or a system by QA personnel as part of the DR process to preclude its use at the FEMP, FERMCO offsite locations, or vendor locations because it deviates from specified requirements or procedures or its continued use or installation would create unsafe work conditions.

Nonconformance - A deficiency in characteristic, documentation, or procedure that renders the quality of an item or activity unacceptable or indeterminate.

Occurrence Report (OR) - A documented evaluation of an event or condition that is prepared in sufficient detail to enable the reader to assess its significance, consequences, or implications and to evaluate the actions being proposed or employed to correct the condition or to avoid recurrence. (Currently, Safety and Health (S&H) implements the OR program per ED-0001, "Event Notification and Occurrence Reporting Procedure.")

Overdue - The status of a DR or CAR when the forecast date for action has expired or action is not complete and no request for extension has been submitted to QA.

Quality Representative - An employee of the QA division (or a person matrixed to QA as a Lead Auditor) trained according to procedure SSOP-0023 and responsible for writing, processing, verifying closure of DRs and CARs.

Root Cause - The reason for an effect that, if corrected, will prevent recurrence of that effect.

Stand-alone Document File - A complete record of events from the date a nonconformance is identified through verification of closure of the DR or CAR. The stand-alone document file has all supporting evidence and documentation that explains what happened, what decisions were made by whom and why, and what evidence exists to show that corrective action took place and was effective. When supporting documentation is too voluminous to include in the document file, it shall be referenced in such a way that an auditor or manager reviewing the file can find the document without extensive research.

Technical Justification - Documentation provided by a cognizant engineer to validate the acceptance of a nonconforming item that has been dispositioned "REPAIR" or "USE AS IS." For facilities or activities that have a DOE approved authorization basis document including Safety Analysis Reports (SARs), Basis for Interim Operations (BIOs), Technical Safety Requirements (TSRs), and Operational Safety Requirements (OSRs), the technical justification must include information pertaining to Unreviewed Safety Question (USQ) pre-screening, screening, or safety evaluation (per SSOP-1035) prior to the approval of a design change.

3.0 **DEFINITIONS** (cont.)

Verification - The act of reviewing, monitoring, inspecting, testing, checking, or auditing "objective evidence" to ensure that the corrective action taken conforms to the corrective action proposed.

4.0 **RESPONSIBILITIES**

Employees

- Identify and report any condition adverse to quality to responsible management or a Quality Representative.
- Stop work and report condition to Supervisor if the condition adverse to quality affects personnel safety.

All Divisions

- Designate a DR/CAR Tracker to track DRs and CARs for the division, act as a Point of Contact, and support the DR/CAR program.
- Supply QA with the name of their Division DR/CAR Tracker.

Quality Assurance (QA) Division

- Develops and maintains the DR and CAR program.
- Trains and qualifies Quality Representatives in accordance with this procedure.
- Performs audits, appraisals, surveillances, inspections, acceptance tests, and observations made during day-to-day activities that may result in issuing a DR or CAR.

Administrator of Deviation and Corrective Action Reports

- Issues DR and CAR control numbers with the help of alternates.
- Maintains and updates DR and CAR databases.
- Maintains document control for DRs and CARs and files them with QA records.
- Maintains a qualified Quality Representative list and a current list of Division Trackers.
- Issues status reports to responsible Quality Representatives, Responsible Managers, FERMCO Senior Management, and the Department of Energy - Fernald Field Office (DOE-FN).

4.0 **RESPONSIBILITIES** (cont.)

- Performs trend analysis of DRs and CARs, which is reported to Senior Management quarterly.

Quality Representative

- Documents nonconformances by employee notification, audit, surveillance, appraisals, inspection, assessment, or observation made during day-to-day activities in DRs and CARs.
- Applies tags to and removes tags from hardware or items that have DRs written against them, if practical.
- Writes and processes DRs and CARs.
- Tracks DRs and CARs assigned to them to conclusion.
- Verifies corrective action identified on a DR or CAR when completed.
- Contacts Occupational Safety and Health (OS&H) if notified of unsafe work condition.

Responsible Person/Manager

- Responds to DRs and/or CARs.
- Ensures that corrective measures are effectively implemented in a timely manner and within the time frame agreed upon with the Quality Representative.
- Identifies and addresses root cause for a nonconformance noted on a CAR in order to prevent recurrence of the nonconformance.
- Provides resources to implement DR disposition and CAR corrective actions in a timely manner.
- Ensures that JUSTIFICATION for "Accept-As-Is" or "Repair" resulting in design changes includes appropriate documentation of USQ pre-screening, screening, and, if necessary safety evaluation (per SSOP-1035).

5.0 **GENERAL**

- Isolated one-time nonconformances are generally documented on a DR. Recurring nonconformances or programmatic breakdowns shall be documented on a CAR. If, during the life of a DR, a nonconformance qualifies as an occurrence according to ED-0001, the DR shall be closed and the OR number referenced on the DR as reason for closure.

5.0 **GENERAL** (cont.)

- Requests for extensions of completion date shall be sent to the Quality Representative in writing with justification, noting the DR or CAR number. The Quality Representative must then sign the request documenting concurrence for the request to be granted.

- Should a DR or CAR remain overdue for more than 30 days, the Quality Representative shall issue a memo transferring action/responsibility to the next level of management for the organization receiving the DR or CAR and the QA counterpart.

- Blatant disregard for quality, requirements, or unsafe work condition shall be grounds for stop work per SSOP-1019, "Quality Assurance Stop Work Authority."

- If the Responsible Organization does not implement its approved Corrective Action as committed, a memo shall be sent from the Director of QA to the receiving Division Manager, informing him/her of the situation and requesting a response. If this request is ignored or deemed not satisfactory, QA reserves the right to stop work per SSOP-1019.

- Any FERMCO employee or subcontractor may document a nonconformance on a DR form; however, only the QA organization can issue the DR. Similarly, only QA management may issue, approve corrective action for, or close a CAR.

- Should a DR or CAR change ownership due to the Responsible Person/Manager leaving the company or changing department/division, the Quality Representative shall coordinate a DR or CAR ownership transfer. Transfers shall be documented, signed, and dated by managers of both the sender and receiver. If there is a dispute as far as ownership is concerned, the dispute will be elevated to the next level of management for resolution.

- DRs and CARs shall be filled out using black ink. White-out is prohibited on original DRs and CARs. If an error is made, draw a line through the text, initial, date, and write in the correction.

- Nonconformances resulting from nonconforming purchased items may be documented on a DR form and issued to FERMCO Procurement. Procurement may contact the Requisitioner for disposition. The Requisitioner may select "Accept-As-Is" (with technical justification) or "Reject" to disposition the nonconforming order. The DR shall be flagged "Supplier DR" in the DR database.

- A DR or CAR may be closed by the Administrator of DRs/CARs at the request of a QA Manager (Level 3 or higher) by memo with justification. When a DR or CAR number has been taken from the database in error, the DR or CAR may be cancelled by the Administrator of DRs/CARs by noting the error on a blank DR or CAR form and filing it in the QA files.

5.0 **GENERAL** (cont.)

- If a DR or CAR form is lost while it is active, the Quality Representative shall obtain a copy, stamp "ORIGINAL" in red ink on the copy, and write "ORIGINAL LOST. THIS COPY TO SERVE AS ORIGINAL." on the copy.

- Revisions of DRs and CARs may be issued at the discretion of the Quality Representative when the disposition of a DR or the corrective action of a CAR is rejected by QA and a new response is required or if the corrective action cannot be verified as committed.

- DRs and CARs are issued as Revision 0; subsequent revisions shall be marked Revision 1, 2, and so on. In all cases, the original or previous revision shall be forwarded to the Administrator of DRs and CARs to be filed. A cover memo shall be issued with the revised DR or CAR to explain the need for the revision and the next action required.

6.0 **PREREQUISITES**

6.1 INDUSTRIAL SAFETY AND HEALTH REQUIREMENTS

None

6.2 TRAINING REQUIREMENTS

The QA Division shall provide training on SSOP-0023 to managers, supervisors, Division Trackers, and others interested or involved in the DR/CAR program.

Quality Representatives shall successfully complete training to this procedure before writing a DR or a CAR.

7.0 **PROCEDURE**

7.1 PROCESSING DEVIATION REPORTS (DRs)

ALL EMPLOYEES

1. Do one of the following:

   a. Notify QA of a suspected nonconformance.

   or

   b. Do the following:

      (1) Obtain a DR form (see Figure 1) from QA.

7.1 PROCESSING DEVIATION REPORTS (DRs) (cont.)

ALL EMPLOYEES

(2) Prepare it per this procedure

(3) Submit it to QA for review or issue.

QUALITY REPRESENTATIVE

2. Evaluate the nonconformance for significant condition adverse to quality.

   a. If criteria for a CAR are met, proceed to Section 7.2.

   or

   b. If criteria for a CAR are not met, continue procedure.

   NOTE: The Quality Representative has 10 business days from the date of discovery to issue the DR.

3. Fill out Section 1 of the DR, referencing audit, surveillance, or inspection number in the "ACTIVITY" space of Section 1, if applicable.

4. Evaluate the nonconformance for requirement violation(s).

   a. If a written FERMCO requirement specified in a FERMCO procedure, plan, or contract, describing how work shall be performed has been violated, cite it on the DR in the "REQUIREMENT" space of Section 2.

   NOTE: If there are similar nonconformances, they may be grouped into one DR. The DR should reflect the number of occurrences for trend analysis purposes.

   or

   b. If no FERMCO requirement exists for known applicable regulatory requirements, discontinue DR and proceed to Section 7.2 so that a CAR can be issued to the Responsible Manager.

5. Write nonconformance in appropriate space of Section 2.

6. Determine response date and enter in the "PLEASE RESPOND BY" space of Section 2.

7.1 PROCESSING DEVIATION REPORTS (DRs) (cont.)

QUALITY REPRESENTATIVE

NOTE: Allow 10 business days from the date of issue for the Responsible Person/Manager to respond unless extenuating circumstances require more time.

7. Obtain unique DR number from the DR database.

8. Enter DR number at the top left of the form.

9. Stamp "ORIGINAL" in red ink on the DR form.

10. Determine if tagging is necessary.

    a. If the use or installation of materials and/or equipment conforms to Hold Tag criteria, such as design, specifications, or project requirements, do the following:

        (1) Check "TAGGING REQUIRED? Yes" box in Section 2.

        (2) Complete the Hold Tag (see Figure 2), including the following information:

            - DR number
            - Quality Representative's name
            - Quality Representative's phone number
            - Date
            - Description of the nonconforming material, item(s), or system.
            - Assigned tag number and total number of tags (e.g., 1 of 2).

        (3) Tag, control, or segregate the material, item(s), or system (i.e., individual or group tagging).

    or

    b. If the nonconformance does not meet Hold Tag criteria, check the "TAGGING REQUIRED? No" box in Section 2 and continue procedure.

11. Sign the "PREPARED BY" space in Section 2 and date.

7.1 PROCESSING DEVIATION REPORTS (DRs) (cont.)

QUALITY REPRESENTATIVE

12. Verbally notify Responsible Person/Manager of forthcoming DR and the date response is due.

13. Inform Responsible Person/Manager to include the Administrator of DRs/CARs, Mailstop 81-1, when responding to the DR.

14. Identify person notified in the "VERBALLY NOTIFIED" space in Section 2 and date.

15. Issue DR including the following distribution (minimum):

    - Original to Responsible Person for disposition
    - Copy to Responsible Person's Manager/Supervisor
    - Copy to the Administrator of DRs/CARs
    - Copy to Division/CRU tracker

RESPONSIBLE MANAGER

NOTE: It is recommended to establish clear lines of communication and avoid misunderstandings that the Responsible Person/Manager contact the Quality Representative and obtain verbal concurrence on a resolution and completion date before documenting in Section 3 of the DR form. Resolution may be aided by a knowledgeable technical expert, if necessary.

16. Check the appropriate block of Section 3 that addresses the action to eliminate the nonconformance.

17. Write disposition in the appropriate space of Section 3.

COGNIZANT ENGINEER

a. If disposition is "Accept-As-Is or "Repair," complete "JUSTIFICATION" space of Section 3.

or

RESPONSIBLE MANAGER

b. If disposition is not "Accept-As-Is" or "Repair," write "N/A" in the "JUSTIFICATION" space of Section 3.

7.1 PROCESSING DEVIATION REPORTS (DRs) (cont.)

RESPONSIBLE MANAGER

NOTE: Additional pages may be used, if necessary.

18. Enter projected completion date in the "PROJECTED COMPLETION DATE" space of Section 3.

19. Sign and date original DR in the appropriate space of Section 3.

20. Return original DR to Quality Representative.

QUALITY REPRESENTATIVE

21. Send copy of DR to the Administrator of DRs/CARs to log response.

22. Evaluate disposition within 10 business days of receipt.

    a. If acceptable, sign and date in Section 4 of the original DR.

    or

    b. If unacceptable, revise and return to step 15 of Section 7.1

23. Send original DR to Responsible Person/Manager and copy to the Administrator of DRs/CARs.

RESPONSIBLE MANAGER

24. Provide resources to implement DR disposition as scheduled.

25. Implement disposition.

26. When disposition is complete, sign and date Section 5 of DR.

27. Send original to Quality Representative with any pertinent supporting documentation.

QUALITY REPRESENTATIVE

28. Verify completion of DR disposition action within 10 business days of notice from the Responsible Person/Manager.

    a. If closure is verified, do the following:

        (1) Complete Section 6 of DR including verification action.

7.1 PROCESSING DEVIATION REPORTS (DRs) (cont.)

QUALITY REPRESENTATIVE

(2) Ensure that the DR contains information necessary to make the DR a stand-alone document.

<u>or</u>

b. If closure cannot be verified, do the following:

(1) Send memo to all parties explaining the situation.

(2) Request that Responsible Person/Manager address the situation.

(3) Complete Section 6 of DR when closure is verified.

29. Forward original DR and all documentation to Administrator of DRs/CARs.

ADMINISTRATOR OF DEVIATION AND CORRECTIVE ACTION REPORTS

30. Perform final check of DR for completeness, accuracy, and legibility.

a. If complete, accurate, and legible, continue procedure.

<u>or</u>

b. If not complete, accurate, and legible, obtain correct or missing information.

31. Stamp original DR form "VALIDATED QUALITY RECORD."

32. Inform all parties including nonconformance identifier (if applicable) of DR closure by memo.

33. File completed, original DR as official QA record.

QUALITY REPRESENTATIVE

34. Ensure DR tag(s) is removed, item(s) is released from "hold status," or item(s) is reintegrated if item(s) was tagged, held, or segregated.

7.2 PROCESSING CORRECTIVE ACTION REPORTS (CARs)

NOTE: Per SSOP-0049, "The FEMP Quality Assurance Audit Program," CARs stemming from audits are to be issued with the Final Audit Report; CARs not stemming from audits are to be issued within 10 business days from the date of discovery.

QUALITY REPRESENTATIVE

1. Complete Section 1 of the CAR (see Figure 3), referencing audit, surveillance, or inspection number in the "ACTIVITY" space in Section 1, if applicable.

2. Evaluate the nonconformance for requirement violation(s).

   a. If a written FERMCO requirement specified in FERMCO procedures, instructions, work plans, project specific plans, program plans, or contracts describing how work shall be performed has been violated relative to the requirement, cite it in the "REQUIREMENT" space in Section 2 on a CAR.

      NOTE: Regulatory Requirements may be referenced as support documents only.

   or

   b. If no FERMCO requirement exists for known applicable regulatory requirements, cite that on the CAR, addressed to the procedure owner or the manager responsible for the Functional Area.

3. Document nonconformance in appropriate space in Section 2.

4. Sign the "PREPARED BY" space in Section 2 and date.

5. Determine response date and enter it in the "PLEASE RESPOND BY" space in Section 2.

   NOTE: Allow 10 business days from the date of issue for the Responsible Manager to respond unless extenuating circumstances require more time.

6. Submit the CAR package to a QA Manager.

QA MANAGER

7. Evaluate the CAR.

   a. If conclusion is that the condition is a programmatic breakdown or a significant condition adverse to quality, do the following:

7.2 PROCESSING CORRECTIVE ACTION REPORTS (CARs) (cont.)

QA MANAGER

(1) Sign "QUALITY MANAGER" space in Section 2 and date.

(2) Inform Quality Representative.

<u>or</u>

b. If it is an isolated incident requiring disposition only, do the following:

(1) Reduce to a DR.

(2) Proceed to Section 7.1.

QUALITY REPRESENTATIVE

8. Verbally notify Responsible Manager of forthcoming CAR and the date response is due.

9. Inform Responsible Manager to include the Administrator of DRs/CARs, Mailstop 81-1, when responding to the CAR.

10. Identify person notified in the "VERBALLY NOTIFIED MANAGER" space in Section 2 and date.

11. Obtain unique CAR number from the Administrator of DRs/CARs (or alternate).

12. Enter in on the top, left-hand side of the form.

13. Ensure original CAR form is stamped or marked "ORIGINAL" with red ink.

14. Issue CAR including the following distribution (minimum):

- Original to Responsible Manager for disposition
- Copy to the Administrator of DRs/CARs Reports
- Copy to the audit file
- Copy to Division/CRU tracker
- Copy to the DOE-FN QA counterpart

7.2 PROCESSING CORRECTIVE ACTION REPORTS (CARs) (cont.)

QUALITY REPRESENTATIVE

15. Evaluate the CAR to determine the root cause using the "Suggestions for Evaluating a Root Cause" (Figure 4) and the "Matrix of Root Causes" (Figure 5) and enter it in the "ROOT CAUSE" space in Section 3 of the CAR.

RESPONSIBLE MANAGER

16. Check for similar breakdowns in your division and include in the "SIMILAR WORK INVESTIGATED" space in Section 3, if applicable.

    NOTE: It is recommended to establish clear lines of communication and avoid misunderstandings that the Responsible Manager contact the Quality Representative and obtain verbal concurrence on a resolution and completion date before documenting in Section 3 of the CAR form. Resolution may be aided by a knowledgeable technical expert, if necessary.

17. Enter action needed to correct original problem, prevent recurrence, and correct any other deficiencies discovered in the "CORRECTIVE ACTION PROPOSED" space in Section 3.

    NOTE: Use additional paper, if necessary.

18. Enter the "PROPOSED COMPLETION DATE" in the appropriate space in Section 3.

19. Sign and date Section 3.

20. Return original CAR complete with corrective action to the Quality Representative within the requested time frame.

21. Send copy of CAR to the Administrator of DRs/CARs to log response.

QUALITY REPRESENTATIVE

22. Evaluate proposed corrective action within 10 business days of receipt.

    a. If the proposed corrective action is acceptable, sign and date Section 4.

    or

7.2 PROCESSING CORRECTIVE ACTION REPORTS (CARs) (cont.)

QUALITY REPRESENTATIVE

b. If the proposed corrective action is unacceptable, do the following:

(1) Document the reason for rejection.

(2) Issue revision requesting new corrective action.

(3) Send first CAR (original or previous revision) to Administrator of DRs/CARs.

(4) Send new, revised CAR to Responsible Manager and return to either step 15 or 17 of Section 7.2, depending on the reason for rejection.

23. Return CAR to Responsible Manager with copy to DR/CAR Administrator.

RESPONSIBLE MANAGER

24. Provide resources to implement corrective action.

25. Implement corrective action.

26. When corrective action is complete, sign and date Section 5.

27. Forward original CAR with supporting documentation to Quality Representative with copy to DR/CAR Administrator.

QUALITY REPRESENTATIVE

28. Verify completion of CAR corrective action within 10 business days of receipt from the Responsible Organization.

a. If closure is verified, do the following:

(1) Sign and date Section 6.

(2) Fill in verification action.

(3) Forward original CAR and all documentation to Administrator of DRs/CARs.

<u>or</u>

7.2 PROCESSING CORRECTIVE ACTION REPORTS (CARs) (cont.)

QUALITY REPRESENTATIVE

b. If closure cannot be verified, do the following:

(1) Call the Responsible Manager explaining why.

(2) Send memo to all parties explaining the situation.

(3) Request Responsible Manager address the situation and proceed to step 25 of Section 7.2.

QA MANAGER

29. Perform final check of CAR for completeness, accuracy, and legibility.

a. If complete, accurate, and legible, continue procedure.

<u>or</u>

b. If not complete, accurate, and legible, obtain correct or missing information.

30. Sign and date Section 6.

QUALITY REPRESENTATIVE

31. Inform all parties of CAR closure by memo.

32. Send original CAR and all supporting documentation to the Administrator of DRs/CARs.

ADMINISTRATOR OF DEVIATION AND CORRECTIVE ACTION REPORTS

33. Review CAR for completeness.

a. If complete, continue procedure.

<u>or</u>

b. If not complete, obtain missing information.

34. Stamp original CAR with "VALIDATED QUALITY RECORD."

35. File completed, original CAR as official QA record.

7.2 PROCESSING CORRECTIVE ACTION REPORTS (CARs) (cont.)

ADMINISTRATOR OF DEVIATION AND CORRECTIVE ACTION REPORTS

36. Do one of the following:

    a. If the CAR is tied to an external audit, proceed to SSOP-1068, "The FERMCO External Audit Management System," for instruction.

    or

    b. If the CAR is not tied to an external audit, end procedure.

8.0 APPLICABLE DOCUMENTS

8.1 DRIVERS

- DOE Order 5700.6C
- RM-0012, "Quality Assurance Program Description"

8.2 REFERENCES

- ED-0001, "Event Notification and Occurrence Reporting Procedure"
- SSOP-0049, "FEMP Quality Assurance Audit Program"
- SSOP-1019, "Quality Assurance Stop Work Authority"
- SSOP-1035, "Unreviewed Safety Question (USQ) Determination and Safety Evaluation System"
- SSOP-1068, "The FERMCO External Audit and Appraisal Management System"
- NQA-1, "Quality Assurance Program Requirements for Nuclear Facilities"

Fernald Environmental FERMCO Restoration Management Corporation	Title: PROCESSING DEVIATION AND CORRECTIVE ACTION REPORTS
	DOCUMENT NO: SSOP-0023 REVISION NO: 5
	Effective Date: 02-16-95 / Page 21 of 30

DEVIATION REPORT

DR NUMBER:	REVISION:

SECTION 1 - BACKGROUND INFORMATION

DATE DISCOVERED:	RESPONSIBLE ORGANIZATION:
RESPONSIBLE PERSON/MANAGER:	
ACTIVITY:	LOCATION:

SECTION 2 - NONCONFORMANCE

REQUIREMENTS:

NONCONFORMANCE:

PLEASE RESPOND BY:	TAGGING REQUIRED? ☐ Yes ☐ No
PREPARED BY (QUALITY REPRESENTATIVE):	DATE:
RESPONSIBLE PERSON/MANAGER VERBALLY NOTIFIED:	DATE:

SECTION 3 - DISPOSITION

DISPOSITION: [ ] Accept-As-Is [ ] Rework [ ] Repair [ ] Reject [ ] Other (e.g., Procedure or Training review)

TECHNICAL JUSTIFICATION (ACCEPT-AS-IS OR REPAIR):

PROJECTED COMPLETION DATE:

RESPONSIBLE PERSON/MANAGER:	DATE:

SECTION 4 - CONCURRENCE WITH DISPOSITION

QUALITY REPRESENTATIVE: ☐ ACCEPT ☐ REJECT	DATE:

SECTION 5 - COMPLETION OF DISPOSITION

RESPONSIBLE PERSON/MANAGER:	DATE:

SECTION 6 - VERIFICATION OF DISPOSITION

\LITY REPRESENTATIVE:	DATE:

FICATION ACTION:

FS-F-2909 (Rev 12/08/94)

Figure 1 - Deviation Report (Sheet 1 of 2)

DEVIATION REPORT (cont.)
INSTRUCTIONS

QUALITY REPRESENTATIVE - COMPLETE SECTIONS 1, 2, AND TOP LINE AS FOLLOWS:	
ITEM	INSTRUCTIONS
DR NUMBER	Enter DR Number on the DR Form (obtained from the DR database or from the DR and CAR Administrator).
REVISION	Enter the current revision number (e.g. 0, 1, or 2).
DATE DISCOVERED	Enter date that nonconformance was discovered.
RESPONSIBLE ORGANIZATION	Enter the organization responsible for the item or activity in which a nonconformance was discovered.
RESPONSIBLE PERSON/MANAGER	Enter name of the person or manager responsible for disposition.
ACTIVITY	Enter activity being performed when nonconformance was discovered, if applicable. (i.e., Audit I89-1)
LOCATION	Enter location of the activity (i.e., Plant 6)
REQUIREMENTS	Enter the procedure, instruction, standard, or code that establishes the acceptance criteria for the activity or item being evaluated.
NONCONFORMANCE	Fully describe the nonconformance as it relates to the requirements.
PLEASE RESPOND BY	Enter date proposed disposition outline is due.
TAGGING REQUIRED	Check whether nonconformance requires items to be tagged or not.
PREPARED BY (QUALITY REPRESENTATIVE)	Sign and date indicating who prepared the form.
RESPONSIBLE PERSON/MANAGER VERBALLY NOTIFIED	Enter the person/manager who was verbally notified of the nonconformance and the date of notification.

RESPONSIBLE PERSON/MANAGER - COMPLETE SECTION 3 AS FOLLOWS:	
DISPOSITION	Check the appropriate block for Accept-As-Is, Rework, Repair, Reject or Other and indicate the appropriate disposition in the space provided.
TECHNICAL JUSTIFICATION (ACCEPT-AS-IS/REPAIR)	If disposition is Accept-As-Is or Repair, provide a technical justification.
PROJECTED COMPLETION DATE	Enter the agreed on completion date for the disposition.
RESPONSIBLE PERSON/MANAGER	Sign and date upon completion of determining disposition.

QUALITY REPRESENTATIVE - COMPLETE SECTION 4 AS FOLLOWS:	
QUALITY REPRESENTATIVE	Sign and date indicating concurrence with proposed disposition.

RESPONSIBLE PERSON/MANAGER - COMPLETE SECTION 5 AS FOLLOWS:	
RESPONSIBLE PERSON/MANAGER	Sign and date indicating disposition completion.

QUALITY REPRESENTATIVE - COMPLETE SECTION 6 AS FOLLOWS:	
QUALITY REPRESENTATIVE	Sign and date indicating verification of the disposition completion.
VERIFICATION ACTION	Enter verification action including tags removed, if applicable.

FS-F-2909 (Rev 12/08/94)

Figure 1 - Deviation Report (Sheet 2 of 2)

HOLD

FOR QA/QC RELEASE

DO NOT REMOVE THIS TAG

TAG NUMBER: _____

FS-F-3761 (11/15/93)

Figure 2 - "Hold for QA/QC Release" Tag

CORRECTIVE ACTION REPORT

CAR NUMBER:	REVISION:

SECTION 1 - BACKGROUND INFORMATION

DATE DISCOVERED:	RESPONSIBLE ORGANIZATION:
RESPONSIBLE MANAGER:	
ACTIVITY:	LOCATION:

SECTION 2 - NONCONFORMANCE

REQUIREMENTS:

NONCONFORMANCE:

PREPARED BY (QUALITY REPRESENTATIVE):		DATE:
PLEASE RESPOND BY:	QUALITY MANAGER:	DATE:
RESPONSIBLE MANAGER VERBALLY NOTIFIED:		DATE:

SECTION 3 - PROPOSED CORRECTIVE ACTION

ROOT CAUSE:

SIMILAR WORK INVESTIGATED:

CORRECTIVE ACTION PROPOSED:

PROPOSED COMPLETION DATE:

RESPONSIBLE MANAGER:	DATE:

SECTION 4 - EVALUATION OF CORRECTIVE ACTION

QUALITY REPRESENTATIVE: ☐ ACCEPT ☐ REJECT	DATE:

SECTION 5 - COMPLETION OF CORRECTIVE ACTION

RESPONSIBLE MANAGER:	DATE:

SECTION 6 - VERIFICATION OF CORRECTIVE ACTION

QUALITY REPRESENTATIVE:	DATE:
VERIFICATION ACTION:	
QUALITY MANAGER:	DATE:

FS-F-2809-1 (REV. 12/08/94)

Figure 3 - Corrective Action Report (CAR) (Sheet 1 of 2)

Fernald Environmental FERMCO Restoration Management Corporation	Title: PROCESSING DEVIATION AND CORRECTIVE ACTION REPORTS
	DOCUMENT NO: SSOP-0023 REVISION NO: 5
	Effective Date: 02-16-95 — Page 25 of 30

CORRECTIVE ACTION REPORT (cont.)
INSTRUCTIONS

QUALITY REPRESENTATIVE - COMPLETE SECTION 1, 2, AND TOP LINE AS FOLLOWS:	
ITEM	**INSTRUCTIONS**
CAR NUMBER	Enter the CAR Number obtained from the Administrator of DRs/CARs or the database.
REVISION	Enter the current revision number.
DATE DISCOVERED	Enter date nonconformance was discovered.
RESPONSIBLE ORGANIZATION	Enter the organization responsible for item(s) or activity for which corrective action is required.
RESPONSIBLE MANAGER	Enter name of the manager responsible for corrective action.
ACTIVITY	Enter activity (e.g., Audit I89-1) when nonconformance was discovered, if applicable.
LOCATION	Enter the location of the activity (e.g., Plant 6).
REQUIREMENTS	Enter the procedure, instruction, standard, or code that establishes the acceptance criteria that has been violated.
NONCONFORMANCE	Describe the nonconformance as it relates to the requirements.
PREPARED BY (QUALITY REPRESENTATIVE)	Sign and date indicating who prepared the form.
PLEASE RESPOND BY	Enter the date the disposition action outline is due.
QUALITY MANAGER	Sign and date indicating nonconformance is a programmatic breakdown.
RESPONSIBLE MANAGER VERBALLY NOTIFIED	Enter the responsible manager who was verbally notified of the nonconformance and date.

RESPONSIBLE MANAGER - COMPLETE SECTION 3 AS FOLLOWS:	
ROOT CAUSE	Enter the underlying (root) cause of the problem.
SIMILAR WORK INVESTIGATED	Identify other areas that have or may have the same root cause problem. The intention is to correct them all at the same time.
CORRECTIVE ACTION PROPOSED	Enter the action proposed to correct the root cause and prevent recurrence of the nonconformance.
COMPLETION DATE	Enter the scheduled completion date for corrective action.
RESPONSIBLE MANAGER	Sign and date indicating manager proposing corrective action.

QUALITY REPRESENTATIVE - COMPLETE SECTION 4 AS FOLLOWS:	
QUALITY REPRESENTATIVE	Evaluate the proposed corrective action to determine its adequacy for solving the problem identified in the report and sign, signifying acceptance of the proposed corrective action.

RESPONSIBLE MANAGER - COMPLETE SECTION 5 AS FOLLOWS:	
RESPONSIBLE MANAGER	Sign signifying corrective action completed.

QUALITY REPRESENTATIVE AND QUALITY MANAGER - COMPLETE SECTION 6 AS FOLLOWS:	
QUALITY REPRESENTATIVE	Verify that the actions taken to correct the nonconformance have been completed satisfactorily, sign, and date.
VERIFICATION ACTION	Enter the verification action performed.
QUALITY MANAGER	Check CAR for completeness, accuracy, and legibility; sign; and date. Transmit original and supporting documents to Administrator or DRs/CARs.

FS-F-2909-1 (REV. 12/08/94)

Figure 3 - Corrective Action Report (CAR) (Sheet 2 of 2)

SUGGESTIONS FOR EVALUATING A ROOT CAUSE

- Work in groups of two or more and brainstorm ideas. This produces more objective and productive results.

- Ask "why" the nonconformance occurred. When you arrive at an answer to that question, ask "why" that happened. Repeat this exercise, commonly known as The Five Whys," as needed. This gets beyond the superficial or obvious response and to the root cause of the problem.

  NOTE: The interim answers to the "why" questions may also be candidates for improvement.

- Ask the question, "Is this an isolated incident or are there similar, or the potential for similar, incidents?" (See Section 3 of the Corrective Action Report Instructions.)

- Consider Work Environment and the Five M's (Manpower, Materials, Machines, Methods, and Management) as possible areas that may be contributing to the problem.

  Work Environment - e.g., lighting insufficient or work area dirty or unsafe.

  Manpower - e.g., operator error or disregard for instructions.

  Materials - e.g., concrete defective, drum leaks, or new type glove or Personal Protective Equipment (PPE) needed.

  Machines - e.g., pump broken, fork lift with higher reach needed, higher capacity electrical service required.

  Methods - e.g., database to collect information needed, improved forms needed, new or revised procedures needed.

  Management - e.g., employee training needed or enforcement of requirements needed, resources needed.

Figure 4 - Suggestions for Evaluating a Root Cause (Sheet 1 of 2)

SUGGESTIONS FOR EVALUATING A ROOT CAUSE (cont.)

The following are typical types of actions taken to correct a problem, finding, or nonconformance:

Immediate Action Action taken to correct the specific condition immediately, e.g., seal an unsealed container, repair a broken instrument, or rewrite an incorrect report.

NOTE: Findings documented on a DR are isolated incidents and require only Immediate Action. If the nonconformance is an isolated incident, this action may be sufficient. If Immediate Action does not correct the problem, it may not be an isolated incident and may require further investigation to find the Root Cause.

Interim/Remedial (Temporary) Action Action taken in the interim, pending a permanent (long-term) system/program action, that will eliminate the Root Cause. For example, a procedure is modified to control the problem until a new process can be developed to eliminate the problem (Root Cause).

Permanent Action Action taken to eliminate the Root Cause of the nonconformance and prevent recurrence of the problem, finding or nonconformance.

NOTE: Generally, this is a system or program action that not only addresses the specific nonconformance, but also all other similar nonconformances as well. (See CAR Form, Section 3.C. "ACTION TAKEN TO PREVENT RECURRENCE")

Figure 4 - Suggestions for Evaluating a Root Cause (Sheet 2 of 2)

MATRIX OF ROOT CAUSES

1.0 EQUIPMENT/MATERIAL PROBLEM

A. Defective or Failed Parts:
i) Correct part unavailable; ii) Inadequate form, fit/function; iii) Failed in normal use; iv) Excessive wear or stress; v) Inadequate quality control; vi) Other

B. Defective or Failed Material:
i) Material unavailable; ii) Inadequate for job; iii) Failed in normal use; iv) Excessive wear/stress; v) Inadequate quality control; vi) Other

C. Defective Weld, Braze or Solder Joint:
i) Poor workmanship; ii) Failed in normal use; iii) Wrong materials used; iv) Inadequate quality control; v) Other

D. Manufacturer Error in Shipping/Marking:
i) Manufacturer error; ii) Inadequate instructions to manufacturer; iii) Other

E. Electrical or Instrument Noise:
i) Inadequate equipment; ii) Failed equipment; iii) Calibration not performed; iv) Other

F. Contamination:
i) No control procedures; ii) Procedures not followed; iii) Procedure requirement not identified; iv) Other

2.0 PROCEDURE PROBLEM

A. Defective or Inadequate Procedure:
i) Inaccurate or inconsistent; ii) Not effective; iii) Out of date; iv) No controls or enforcement; v) Other

B. Lack of Procedure:
i) No procedure; ii) Informal, undocumented; iii) No requirement; iv) Requirement unclear; v) Requirement ignored; vi) Not distributed; vii) Other

3.0 PERSONNEL ERROR

A. Inadequate Work Environment:
i) Deficient work area temperature; ii) Work area noise problem; iii) Work area space problem; iv) Other

Figure 5 - Matrix of Root Causes (Sheet 1 of 3)

MATRIX OF ROOT CAUSES (cont.)

B. Inattention to Detail:
i) Physical distraction in work place; ii) Personnel problem; iii) Other

C. Violation of Requirement or Procedure:
i) Unaware of requirement; ii) Procedure/written instruction ignored; iii) Inappropriate use of procedure; iv) Deficient written instructions; v) Other

D. Verbal or Communication Problem:
i) Message content inadequate; ii) Message media inadequate; iii) Inattention of receiver; iv) Received but ignored; v) Other

E. Other Human Error:
i) Errors unrelated to work environment, attention, requirement violations and communications

4.0 DESIGN PROBLEM

i) Inadequate calculations or analysis; ii) Inadequate QA of design effort; ii) Inadequate documentation or configuration control; v) Other

5.0 TRAINING DEFICIENCY

A. No Training Provided:
i) No training program available; ii) No requirement; iii) Requirement unclear or not identified; iv) Other

B. Insufficient Practice or Hands-On Experience:
i) Lack of On-the-Job Training (OJT); ii) Inadequate OJT; iii) Inadequate testing; iv) Other

C. Inadequate Content:
i) Inadequate or missing material; ii) Poor lesson plan design; iii) Inexperienced subject matter expert; iv) Other

D. Insufficient Refresher Training:
i) No requirement; ii) Requirement unclear/not identified; iii) Schedules not communicated well; iv) Attendance not enforced; v) Other

E. Inadequate Presentation or Materials:
i) Materials or presentation unclear; ii) Materials incomplete for requirements; iii) Inadequate communication; iv) Other

Figure 5 - Matrix of Root Causes (Sheet 2 of 3)

MATRIX OF ROOT CAUSES (cont.)

6.0 MANAGEMENT PROBLEM

A. Inadequate Administrative Control:
i) Authority not delegated/documented/communicated; ii) Ineffective/missing document controls; iii) Other ineffective management control systems

B. Work Organization/Planning Deficiency:
i) Goals/objectives not well defined; ii) Ineffective work planning; iii) Ineffective work scheduling; iv) Work backlog problem; V) Information flow problem

C. Inadequate Supervision:
i) Lack of direct supervision; ii) Ineffective supervision techniques; iii) Supervisory communications problem; iv) Lack of or ineffective feedback/lesson learned mechanism

D. Improper Resource Allocation:
i) Goals/objectives not well defined; ii) Priority problem; iii) Personnel qualifications status unknown; iv) Equipment status unknown

E. Policy Not Adequately Defined, Disseminated, or Enforced:
i) Inadequate policy/requirements definitions; ii) Inadequate communications of requirements; iii) Lack of enforcement of requirements; iv) Management unaware of requirements

F. Other Management Problem:
i) Management attitude problem; ii) Organization culture problem; iii) Low priority; iv) Other

7.0 EXTERNAL PHENOMENA

A. Weather or Ambient Condition:
i) Weather event beyond control of reporting organization; ii) Ambient conditions beyond control of the reporting organization

B. Power Failure or Transient:
i) Power loss attributed to outside supplied power

C. External Fire or Explosion:
i) External fire event beyond control of organization; ii) Explosion/chemical release event beyond control of reporting organization

D. Theft, Tampering, Sabotage/Vandalism:
i) External theft beyond control of the reporting organization; ii) Tampering, vandalism, or sabotage not prevented by reporting organization

Figure 5 - Matrix of Root Causes (Sheet 3 of 3)

6989 CONTROL NO. [redacted]

NON-CONTROLLED COPY

REQUIREMENTS MANUAL
DOCUMENT NO. RM-0012
REVISION NO. 3

QUALITY ASSURANCE PROGRAM

RM-0012

Supersedes RM-0012, Revision No. 2

Effective Date: 11-30-94

AUTHORIZED BY: _____ 26 Oct '94
Don Ofte, President Date

FERNALD ENVIRONMENTAL MANAGEMENT PROJECT

Fernald Environmental Restoration Management Corporation
P.O. Box 538704
Cincinnati, Ohio 45253-8704

RECORD OF ISSUE/REVISIONS

DATE	REV. NO	DESCRIPTION AND AUTHORITY
04-30-92	0	Procedure required for Quality Assurance Program Description, initiated by M.A. Malone per Request No. S92-099. Replaces PL-3014, *Quality Assurance Program Plan*. The content and format were revised to meet requirements of DOE Order 5700.6C. Also, content was revised to incorporate findings under Commitment Number DW:92: 0176.
07-03-92	1	Document revised to resolve comments from DOE per Request No. S92-218, initiated by Jim Turner.
04-30-93	2	Document revised to incorporate organizational changes effected upon change of contracting organization from WEMCO to FERMCO. Revisions also incorporate comments from DOE-EM organizations. Issued for internal review prior to formal revisions. Initiated by Jim Turner.
11-30-94	3	Document revised to incorporate organizational changes; 10 CFR 830.120, Quality Assurance requirements; and review comments. Issued for internal review prior to formal revisions. Initiated by David Ponke. The effective date for the *QAP* is 11/30/94. This date allows for distribution and training for the revised *QAP*.

TABLE OF CONTENTS

PAGE

STATEMENT OF FERMCO QUALITY ASSURANCE POLICY AND AUTHORITY iv

INTRODUCTION v

FUNCTIONAL CATEGORY A: MANAGEMENT 1

CRITERION 1 - PROGRAM 2

CRITERION 2 - PERSONNEL TRAINING AND QUALIFICATION 9

CRITERION 3 - QUALITY IMPROVEMENT 14

CRITERION 4 - DOCUMENTS AND RECORDS 19

FUNCTIONAL CATEGORY B: PERFORMANCE 24

CRITERION 5 - WORK PROCESSES 25

CRITERION 6 - DESIGN 32

CRITERION 7 - PROCUREMENT 37

CRITERION 8 - INSPECTION AND ACCEPTANCE TESTING 42

FUNCTIONAL CATEGORY C: ASSESSMENT 48

CRITERION 9 - MANAGEMENT ASSESSMENT 49

CRITERION 10 - INDEPENDENT ASSESSMENT 52

APPENDIX A - FERMCO ORGANIZATION CHART 56

APPENDIX B - FERMCO ORGANIZATIONS AND FUNCTIONS 57

APPENDIX C - ABBREVIATIONS, ACRONYMS AND DEFINITIONS 62

APPENDIX D - GRADED APPROACH FOR QUALITY LEVELS 72

ATTACHMENT D1 - CATEGORIZATION CRITERIA FOR FACILITIES/ACTIVITIES AND SYSTEMS, STRUCTURES, AND COMPONENTS . . 82

ATTACHMENT D2 - APPLICATION OF QUALITY LEVELS TO QA PROGRAM CRITERIA . . 89

APPENDIX E - KEY DOCUMENTS WHICH IMPLEMENT QA REQUIREMENTS 101

STATEMENT OF FERMCO QUALITY ASSURANCE AUTHORITY

FERMCO provides a number of deliverables to the DOE, regulatory agencies and the public. FERMCO is committed to continuously improve the quality of our products and services. We must do the right thing right, the first time, safely, at least cost, and on time.

The *Quality Assurance Program (QAP)* describes the policies and practices which constitute the FERMCO Quality Assurance Program. This program, along with associated policies and procedures, establishes a system for achieving or exceeding the required quality levels for activities associated with the Fernald Environmental Management Project (FEMP). Where and to the extent that activities must be controlled and performed in specific manners or steps, procedures and work instructions will be used with a level of specificity and detail appropriate to the importance or hazard of the activity. Employees will be trained to these procedures and instructions and expected to follow them exactly. In the event that employees believe that procedural compliance is unwise or unsafe, they will stop work at a position of process safety and stability and resolve the concerns with appropriate supervision. Procedural changes will then be made as appropriate to continue work.

I retain the responsibility for the overall FERMCO Quality Assurance Program. The authority for establishing, administering, and evaluating the effectiveness of the Quality Assurance Program is delegated to the Director of Quality Assurance. All levels of FERMCO management are responsible for contributing to the achievement of quality; and for taking a leadership role in ensuring that quality assurance requirements are factored into their work activities, understood by all employees, continually assessed, and fully implemented. Each employee is responsible for compliance with the requirements of quality assurance programs as they apply to their work assignments.

FERMCO will work towards a 'no-fault' attitude to encourage all employees to identify nonconforming items and processes, and suggests improvements. Every FERMCO employee must fully support implementation of quality assurance programs and become involved in and support a process of systematic and continuous performance improvement. These efforts are essential to sustain quality and improvement of environmental remediation.

Don Ofte, President
Fernald Environmental Restoration
Management Corporation

INTRODUCTION

1.0 Background

The Department of Energy (DOE) facility at Fernald, Ohio was built in the early 1950s by the U.S. Atomic Energy Commission to process uranium ore concentrates into high-purity uranium-metal products. National Lead of Ohio was the management and operations (M&O) contractor from 1953 to 1986. In 1986, Westinghouse Environmental Management Company of Ohio (WEMCO) (formerly Westinghouse Materials Company of Ohio) assumed this management and operations contract. In 1989, Westinghouse and DOE suspended uranium production operations at Fernald and placed a new focus on environmental restoration for the Fernald site.

In 1991, DOE permanently terminated production operations, reorganized the Fernald site to reflect its environmental restoration mission, and changed the name of the site to the Fernald Environmental Management Project (FEMP). On December 1, 1992, the Fernald Environmental Restoration Management Corporation (FERMCO) assumed responsibility for the FEMP under a new contract structure called an Environmental Restoration Management Contract (ERMC) which was changed to a Performance Based Contract (PBC) in July 1994. In contrast to the previous M&O contracts, the PBC is responsible for the management of all work to perform the environmental remediation of the FEMP within applicable laws, regulations, DOE Orders and commitments.

2.0 FERMCO Mission Statement

Together DOE and FERMCO are committed to the safe, least-cost, earliest final cleanup of the Fernald site, within applicable DOE orders, regulations and commitments, and in a manner which addresses stakeholder concerns.

An integral part of successfully pursuing this mission is to ensure that the required level of quality in all site activities is achieved, while also taking the necessary measures to ensure the health and safety of site personnel and the public, and safeguarding the environment. The success of the FEMP depends on the required level of quality being achieved in every functional area including: design and analysis, procurement, fabrication, installation, surveying, construction, testing, handling, storing, shipping, operating, maintenance, repair, modification, decontamination, decommissioning, sample collection and analysis, monitoring, measurement, data analysis, inspection, management assessments, independent assessments, training, and documentation.

3.0 Program Standard

The *QAP* uses 10 CFR Part 830.120 for the basic requirements and uses other requirements as stated in the following paragraphs to enhance the QA Program and tailors it to meet the needs of the site. FERMCO's QA Program also incorporates appropriate requirements from DOE's *QA Rule Implementation Guide*, G-830.120 - Rev. 0 (04/15/94). Statements from this Guide have been identified as either requirements or recommendations (move towards excellence) as documented in both the *Quality Assurance Program* (RM-0012) and the *QA Rule Implementation Plan QARIP* (PL-3029). 10 CFR Part 830.120 is intended to supersede the existing requirements in DOE Order 5700.6C, *Quality Assurance*, for nuclear facilities. The basic requirements of DOE Order 5700.6C and 10 CFR Part 830.120 are identical. Approved management programs based on DOE Order 5700.6C will meet the requirements of 10 CFR Part 830.120.

10 CFR Part 830.120 (QA Rule) requires the preparation of an implementation plan which describes the schedules, milestones, and activities necessary to implement the regulation. The purpose of FERMCO's *QA Rule Implementation Plan (QARIP)*, PL-3029, is to provide detailed information necessary for FERMCO to implement (through the *Quality Assurance Program [QAP]*) the requirements of 10 CFR Part 830.120.

Despite broad application of the QA Program at the FEMP, FERMCO's commitment to implement the QA Rule is confined to two activities - Safe Shutdown Operations, and Material Storage and Handling - conducted in existing facilities rated as Nuclear Hazard Category (HC) 1, 2, or 3. FERMCO also commits to implement the QA Rule in future activities which may be rated HC1, 2, or 3 in an approved Safety Analysis Report (SAR).

FERMCO's *Quality Assurance Program (QAP)* is based on the appropriate criteria specified in *10 CFR Part 830.120 Quality Assurance Requirements*, ANSI/ASME NQA-1 *Quality Assurance Program Requirements for Nuclear Facilities*, ANSI/ASQC-E4 (draft) *Quality Assurance Program Requirements for Environmental Programs*, (which was written to meet the guidance contained in QAMS-005/80 *Interim Guidelines and Specifications for Preparing Quality Assurance Project Plans* by the U.S. EPA), DOE Orders 4700.1 *Project Management System*, 5400.1 *General Environmental Protection Program*, and other DOE orders specifying quality assurance(QA) related requirements.

Standards and requirements are identified in the Standards/Requirements Identification Document (S/RID) in RM-0016, *Management Plan*. The successful application of the management system should embrace the philosophy described in DOE/HR-0066. The principles described in DOE/HR-0066 are applied in practice through the application of the criteria of 10 CFR Part 830.120.

4.0 Scope

This *QAP* establishes the QA requirements for FERMCO and all other contractor and subcontractor organizations performing work at the FEMP. The *QAP* identifies and describes the integral elements of the QA activities that apply to the broad spectrum of work performed by FERMCO and its contractors and subcontractors for all activities associated with the FEMP.

Major work activities associated with the FEMP are: remedial investigation, feasibility study, removal site evaluations, removal actions, remedial design, remedial actions, Resource Conservation and Recovery Act (RCRA) activities, construction, waste management, safe shutdown, program management and support activities, and landlord activities.

Although it is not necessary for each organization to develop a separate QA Program covering their operation, special QA Program Plans may be developed for programs or projects which require additional control or special emphasis not covered in the *QAP*.

5.0 Description of Program

FERMCO policy is to establish and implement a QA Program to ensure that risks and environmental impacts are minimized and that safety, reliability, and performance are maximized through the application of effective management systems commensurate with the risks posed by the facility and its work. The QA Program also incorporates requirements for effective planning, implementation, and assessment of environmental sampling and analysis activities.

The *QAP* is organized into three functional categories:

MANAGEMENT
- CRITERION 1 - PROGRAM
- CRITERION 2 - PERSONNEL TRAINING AND QUALIFICATION
- CRITERION 3 - QUALITY IMPROVEMENT
- CRITERION 4 - DOCUMENTS AND RECORDS

PERFORMANCE
- CRITERION 5 - WORK PROCESSES
- CRITERION 6 - DESIGN
- CRITERION 7 - PROCUREMENT
- CRITERION 8 - INSPECTION AND ACCEPTANCE TESTING

- ASSESSMENT
  - CRITERION 9 - MANAGEMENT ASSESSMENT
  - CRITERION 10 - INDEPENDENT ASSESSMENT

Within the three functional categories are the QA criteria that provide the basic requirements of a QA Program. Each criterion also identifies responsibilities and outlines the procedural approach that will be followed.

6.0 Program Implementation

A. Graded Approach

The scope and depth of the management system's application of requirements to a specific activity shall be determined by the use of a grading process. The grading process provides the flexibility to design controls that best suit the facility or activity. The graded approach process shall determine the appropriate level of effort necessary to attain and document the requirements established through the consideration of prescribed factors.

This process is based on prescribed facility-specific or activity-specific factors such as the:

- level of risk;
- age, status, and condition of a facility or process;
- history of problems at a site or facility;
- adequacy of existing safety documentation; and
- complexity of products or services involved.

A graded approach and the establishment of Quality Levels are used to determine the appropriate level of effort necessary to implement the requirements of 10 CFR 830.120.

A graded approach as specified in Appendix D - *Graded Approach for Quality Levels*, shall be used to ensure that the resources applied are commensurate with the importance of the result to the achievement of site goals.

B. Implementing Documents

Implementation of the QA Program requires the use of implementing documents which satisfy the provisions of this *QAP*.

RM-0016, *Management Plan* - FERMCO Policies and Requirements Manual, charters all functional area managers to develop plans and procedures to the requirements of their functional areas.

SDI-100, the *Site Document Index*, is updated monthly by the Administration organization, and identifies the latest implementing site procedures and revisions. Key site documents which implement QA requirements are listed in Appendix E.

The requirements of QAMS-005/80 and DOE Order 5400.1 apply to all environmental monitoring and measurement efforts mandated by the EPA. The *Federal Facilities Compliance Agreement* and the *Amended Consent Agreement* require that an approved *Quality Assurance Project Plan* (*QAPjP*) be established in accordance with EPA requirements for QA Plans to address data generation activities.

FD-1000, the *Sitewide CERCLA Quality Assurance Project Plan* (*SCQ*), as the principal *QAPjP* for the FEMP, has been developed to cover the EPA QAMS requirements for environmental sampling and analysis to support ultimate remediation of the site. The *SCQ* describes the QC procedures to be followed by DOE and its contractors during the course of remediation of the FEMP. The *SCQ* also describes the QC acceptance criteria used to determine the precision, accuracy, representativeness, comparability, and completeness of environmental measurements. Basic requirements for sampling, sample handling and storage, chain-of-custody records, and laboratory and field analysis are specified in the sections and appendices of the *SCQ*.

C. Should and Shall Statements Usage

The usage of <u>should</u> and <u>shall</u> statements as used in the *QAP* are defined as follows:

- Shall statements are mandatory requirements.
- Should statements affect culture and movements toward excellence. They are not requirements for enforcement. Personnel should strive to attain goals to support site strategic planning.

THIS
PAGE
INTENTIONALLY
BLANK

FUNCTIONAL CATEGORY A: MANAGEMENT

The Management Category contains the program elements that define the framework for the management systems supporting the QA Program that:

- Establishes the responsibility and authority of the functional units of FERMCO relative to assuring quality of processes and products involved in all activities for the FEMP.
- Describes the role of the QA organization in establishing and maintaining the QA Program.
- Defines required quality levels for work, outlines organizational responsibilities, provides for training of personnel, and describes the interfacing between organizations to ensure that the varied expertise of the organization is utilized.
- Establishes a system for the prevention, early detection, correction, and reporting of deficiencies, including any breakdown in the management systems, to ensure the quality and improvement of removal, remediation, and remediation support.
- Describes the document control system and the system for the compilation of records which document FERMCO management of the QA program.

The Management Category is composed of the following criteria:

- Criterion 1 - Program
- Criterion 2 - Personnel Training and Qualification
- Criterion 3 - Quality Improvement
- Criterion 4 - Documents and Records

1.0 CRITERION 1 - PROGRAM

1.1 SCOPE

This criterion describes the requirements and responsibilities for an organization to develop and maintain an effective management system. The management system shall include the methods of managing, performing, and assessing the adequacy of work, including work assigned to parties outside the organization.

The management system shall focus on accomplishing the mission as outlined in the organization's *Management Plan - FERMCO Policies and Requirements Manual*, RM-0016. The management system applies to every component and employee of the organization, and includes the organizational structure, functional responsibilities, level of authority, and interfaces.

1.2 REQUIREMENTS

1.2.1 Develop, implement and maintain a written *Quality Assurance Program (QAP)* and submit it to the Lead Program Secretarial Officer (PSO) for approval. FERMCO subcontractors' shall submit their Quality Assurance Programs (where QA programs are required) to FERMCO Quality Assurance for review and approval.

1.2.2 The *QAP*:

- Describes the organizational structure (Appendix A - FERMCO Organization Chart), functional responsibilities (Appendix B - FERMCO Organizations and Functions), levels of authority, and interfaces for those managing, performing, and assessing the adequacy of work.

- Describes the onsite and offsite organizational elements, including interfaces for roles and responsibilities of FERMCO and DOE Fernald Field Office (DOE-FN) in the review of contractor's QA Plans.

- Establishes criteria for developing individual QA Plans or combining similar work under a single QA Plan when appropriate.

1.2.3 Organizations conducting environmental sampling and analysis shall comply with quality assurance and quality control requirements specified in FD-1000, *Sitewide CERCLA Quality Assurance Project Plan (SCQ)*, as approved by the DOE and the EPA, as well as with this *QAP*. Geotechnical analysis and measurements conducted for treatability studies and engineering design studies for environmental decisions shall comply with the applicable sections of the *SCQ* as stated above.

1.2.4 The applicable requirements of 10 CFR Part 830.120, *Quality Assurance Requirements* of this *QAP* shall be applied to suppliers and subcontractors who perform work under the prime cognizance of FERMCO or work that affects the responsibility of FERMCO.

1.2.5 Senior management shall develop and issue a written QA Policy Statement which commits FERMCO to implement a formal QA Program.

1.2.6 Senior management shall retain and exercise the responsibility for the scope and implementation of an effective QA Program.

1.2.7 Line management shall be responsible for the achievement of quality.

1.2.8 Individuals shall be responsible for the quality of their work.

1.2.9 The QA Program should promote effective and efficient achievement of performance objectives.

1.2.10 The QA Program shall be binding on all personnel, including those having responsibility for planning and scheduling. Management shall take the necessary actions to ensure that the QA Program is understood and implemented.

1.2.11 A common vocabulary consistent with and representative of work being performed shall be adopted. (Appendix C)

1.2.12 Key terminology shall be defined. (Appendix C)

1.2.13 The quality of items and processes shall be ensured to an extent consistent with their potential impact on the safe and reliable operation of the FEMP. A graded approach, as specified in Appendix D - *Graded Approach for Quality Levels*, shall be used to ensure that the resources applied are commensurate with the importance of the result to the achievement of site goals.

1.2.14 FERMCO personnel shall be indoctrinated in acronyms and definitions to ensure consistent understanding and communication.

1.2.15 Work assigned to parties outside FERMCO (contractors, subcontractors, suppliers, etc.) shall be identified. Management controls shall be established, responsibilities assigned, and lines of communications identified.

1.2.16 Organizations should ensure that initial estimates used in planning are based on valid data and assumptions relating to personnel, material/service costs, availabilities, and productivity.

1.2.17 Readiness reviews shall be performed prior to initiation of major work activities identified to require readiness review. Readiness reviews shall be performed to verify at least the following characteristics:

- Work prerequisites have been satisfied, including regulatory compliance issues.
- Detailed technical and QA procedures have been reviewed for adequacy and appropriateness.
- Training programs are in place.
- Personnel have been suitably trained and qualified.

- Proper equipment, material, and resources are available.

1.2.18 FERMCO shall assign the responsibility and authority to stop unsatisfactory work and control further processing, delivery, installation, or use of nonconforming items such that planning and schedule considerations do not override safety, quality, or environmental considerations. A readiness review using a graded approach shall be performed in accordance with Paragraph 1.2.17 prior to restarting work affected by a stop work order.

1.3 RESPONSIBILITIES

1.3.1 President of FERMCO shall:

- Retain the authority and responsibility for the overall QA Program of FERMCO. This authority extends to the review and approval of this *QAP*.

- Establish the QA policy for FERMCO.

1.3.2 Quality Assurance Organization shall:

- Provide FERMCO with systems for a quality assurance program that provide assurance that all FEMP organizations, projects, systems, operations, activities, and processes are managed and operated to achieve intended results and that items and services supplied or procured meet the intended or required standards.

- Develop the QA Program, with input from all senior managers, monitor its implementation and effectiveness, and coordinate the FERMCO Organizations' QA functions.

- Review and approve other FERMCO contractor Quality Assurance Program Plans/Descriptions (where QA programs are required).

- Issue a Stop Work Order, as authorized by the Quality Assurance Director, for a significant condition adverse to quality in which continued work could prevent repair or in which there is a major programmatic breakdown that impacts a major portion of the work being performed.

1.3.3 Managers of FERMCO Organizations shall:

- Retain the primary responsibility and are accountable for the scope and implementation of the management system. However, every individual in the organization is responsible for achieving quality in his or her activities.

- Promote effective achievement of performance objectives through the:

  - establishment of task assignments;
  - identification of lines of communication; and
  - determination and provision of the necessary resources and environment to accomplish the required activities.

- Ensure the achievement of quality in the products, processes, services, and work activities assigned to their organizations.

- Conduct their organization's operations in compliance with the applicable requirements of this *QAP*.

- Perform evaluation of structures, equipment, systems, components, and processes relative to their importance to safety, reliability, and other quality functions.

- Prepare, implement, and maintain procedures, to comply with applicable requirements of this *QAP*. Each organization is to maintain a record documenting implementation of applicable requirements.

- Provide their personnel with the necessary orientation and training to ensure compliance with existing, new, or revised implementing procedures.

- Ensure, for all assigned work, that the management controls shall include the establishment of responsibilities and the identification of lines of communication.

- Ensure, that all personnel understand and implement the management system.

1.4 IMPLEMENTATION

1.4.1 Graded Approach

The scope and depth of the management system's application of requirements to a specific activity shall be determined by the use of a grading process. The grading process provides the flexibility to design controls that best suit the facility or activity. The graded approach process shall determine the appropriate level of effort necessary to attain and document the requirements established through the consideration of prescribed factors.

This process is based on a prescribed facility-specific or activity-specific factors such as the:

- level of risk;
- age, status, and condition of a facility or process;
- history or problems at a site or facility;
- adequacy of existing safety documentation; and
- complexity of products or services involved.

A graded approach and the establishment of Quality Levels are used to determine the appropriate level of effort necessary to implement the requirements of 10 CFR 830.120.

A graded approach as specified in Appendix D - *Graded Approach for Quality Levels*, shall be used to ensure that the resources applied are commensurate with the importance of the result to the achievement of site goals.

1.4.2 Implementing Documents

Implementation of the QA Program requires the use of implementing documents which satisfy the provisions of this *QAP*.

The process for developing and using plans and procedures and their implementation is outlined in RM-0016, *Management Plan - FERMCO Policies and Requirements Manual*. RM-0016 charters all functional area managers to develop plans and procedures to the requirements of their functional areas.

SDI-100, the *Site Document Index*, is updated monthly by the Administration Organization, and identifies the latest implementing site procedures and revisions. A current listing of key site documents which implement QA requirements are included in Appendix E. This list is officially maintained and controlled in RM-0016, *Management Plan - FERMCO Policies and Requirements Manual*.

2.0 CRITERION 2 - PERSONNEL TRAINING AND QUALIFICATION

2.1 SCOPE

This criterion describes the FERMCO requirements for personnel to be trained and qualified to ensure they are capable of performing their assigned work. Personnel shall be provided continued training to ensure that job proficiency is maintained.

2.2 REQUIREMENTS

2.2.1 A formal training program for Resource Conservation and Recovery Act (RCRA) hazardous waste personnel shall be developed for the Fernald Environmental Management Project (FEMP) as required by Ohio Administrative Code (OAC) 3745-50-44(A)(12), OAC 3745-54-16, Title 40 Code of Federal Regulation (CFR) 270.14 (b) (12) and 40 CFR 264.16.

The training program shall also meet the training requirements for RCRA permitted treatment, storage and disposal facilities prescribed in the Occupational Safety and Health Act (OSHA) regulations in 29 CFR 1910.120.

2.2.2 All personnel shall be capable of performing their assigned tasks. Training plans shall be developed for all personnel. The training identified in the plans shall prepare the employee to perform the job, as well as, maintain and promote progressive improvement and employee satisfaction. Qualification requirements (experience, education, and training) shall be documented for each position as required.

2.2.3 Training shall provide the worker with an understanding of the processes and tools required. Using the graded approach, it shall cover the extent and sources of variability in those processes and tools, the degree to which the worker does and does not have control over that variability, and an understanding of the fundamentals of the work.

2.2.4 Training shall emphasize requirements for performance of work and provide understanding of why quality requirements exist. The training shall focus attention of doing the right things the first time and address potential consequences of improper work.

2.2.5 The training shall be presented by trained and qualified instructors. They may be training providers or qualified members of the organization requiring. Instructors shall possess technical knowledge, experience, course development and instructional skills.

2.2.6 Training plans shall address and stimulate job performance. They are to provide for progressive improvement and shall not be limited to initial qualification for job proficiency. Training plans for management personnel should include professional, managerial, communication, and interpersonal skills.

2.2.7 Personnel performing work that requires special skills or abilities or legally required training shall be qualified (and certified, if required) prior to performing that work. The certification program is to include demonstrated proficiency.

2.2.8 Training programs shall be periodically reviewed to determine program and instruction effectiveness, and shall be upgraded when required.

2.3 RESPONSIBILITIES

2.3.1 Training Department of the Administration Organization shall:

- Develop programs and procedures pertaining to training.
- Establish site indoctrination and training programs and procedures.

- Ensure that FERMCO technical training and professional development training programs are in compliance with DOE and other regulatory requirements.

- Ensure the effectiveness of technical training.

- Maintain and administer the Training Records System.

- Maintain a file on the training required for each position description based on input from Organization Managers.

2.3.2 FERMCO Organization Managers shall:

- Identify and document those work functions requiring special skills and implement training procedures to ensure the adequacy of personnel proficiency for work to be performed; identify minimum education and experience requirements to perform the work; and identify general training topics.

- Identify the operations under their responsibility which must comply with mandatory training requirements and which need trained, qualified, and certified employees.

- Prepare a training plan for employees, which includes continued training required to maintain job proficiency. This should include understanding of processes and tools used, limitations on the use and operation of the processes and tools, sources of variability, and the limitation to the degree of control over those sources of variability.

- Ensure that the required indoctrination, training, and qualification for a specified task is completed prior to employees performing the task.

- Ensure that personnel including subcontractors and temporaries performing work for the organization are suitably qualified to accomplish their assigned tasks. Personnel may be qualified by:

  - considering previous experience, education, and training;
  - demonstrating and testing to verify previously acquired skills; or
  - completing a training or qualification program.

2.3.3 Human Resources Department of the Administration Organization shall:

- Develop and maintain position descriptions and associated individual experience and educational records.

- Perform verification of personnel qualification, education, and experience.

- Administer the new employee indoctrination program.

- Maintain a file containing the written job title and written job description for each position at the FEMP.

2.3.4 The Professional Development (PD) Section of the Total Quality Management/Continuous Performance Improvement Organization shall:

- Administer professional development training.

- Administer professional development programs.

- Monitor their effectiveness.

2.3.5 The Quality Assurance Organization shall:

- Certify waste certification officials and quality auditing personnel.
- Certify Level III nondestructive examination personnel in Quality Assurance to American Society of Nondestructive Testing (ASNT) standards.
- Conduct independent overview of training activities to assure compliance with program requirements.
- Certify Lead Auditors and maintain records of certification in accordance with Supplement 2S-3, "Supplementary Requirements for the Qualification of Quality Assurance Program Audit Personnel," of ASME NQA-1-1989, *Quality Assurance Program Requirements for Nuclear Facilities*.
- Certify Level I & II nondestructive examination personnel by its Level III person(s) to ASNT standards.
- Certify waste verification personnel by the Manager, Quality Certification.

2.3.6 FERMCO Employees shall:

- Attend training as scheduled.
- Refrain from operating equipment or performing work until proper training has been completed.

3.0 CRITERION 3 - QUALITY IMPROVEMENT

3.1 SCOPE

This criterion describes the requirements and responsibilities for establishing and implementing processes to detect, control, correct, and prevent quality problems and to promote quality improvement.

3.2 REQUIREMENTS

3.2.1 The FERMCO QA Program shall establish and implement processes to detect and prevent quality problems and promote continuous quality improvement. The focus of quality improvement shall be to improve the quality of items and processes.

3.2.2 A trend analysis system shall be developed that identifies trends that adversely impact quality and opportunities to improve the quality of items or processes. This analysis shall consider information from external sources and not be limited to one type, one facility, or one contractor. This includes performance data, internal and external failure costs, prevention costs, and other quality-related information.

3.2.3 A system shall be established where items, activities, and processes that do not meet specified requirements are identified, controlled, and corrected to prevent their inadvertent test, installation, or use.

Items and processes shall be reviewed by qualified and knowledgeable personnel, and a justification for the disposition shall be documented.

Controls shall provide for the identification, documentation, evaluation, segregation where practical, and disposition of deviations and for notification to affected organizations.

3.2.4 The corrective action program shall include the identification of the causes of problems to preclude recurrence.

3.2.5 Item characteristics, process implementation, and other quality-related information shall be reviewed and the data analyzed to identify items and processes needing improvement.

3.2.6 Management, at all levels, will work towards and foster a 'no-fault' attitude to encourage the identification of nonconforming items and processes. Management will also encourage personnel to identify and promote performance improvement.

3.2.7 Reworked and replacement items and processes shall be inspected and tested in accordance with original requirements. Repaired items and processes shall be inspected and tested in accordance with specified alternatives to original requirements.

3.2.8 A process for resolving professional differences of views and opinions shall be established.

3.3 RESPONSIBILITIES

3.3.1 Total Quality Management/Continuous Performance Improvement Council, chaired by the FERMCO President, shall:

- Develop policy that enhances continuous improvement in the quality and productivity of FERMCO services and products.
- Develop an annual Continuous Performance Improvement Plan.
- Identify and prioritize key company quality issues.
- Establish teams to resolve key company quality issues and monitor the teams' progress.
- Encourage employee involvement to effect the changes that are needed to improve FERMCO's quality performance.

- Promote activities which recognize employee contributions to Continuous Performance Improvement.

3.3.2 The FERMCO Ombudsman shall:

- Provide a communication channel from employees directly through the Ombudsman to the FERMCO President and/or other appropriate management representatives.

- Review inputs for trends and systemic problems which require the attention of the FERMCO President and/or other appropriate management representatives.

3.3.3 Management is responsible for building a culture in which improvement is continuous and an integral part of the organization. Managers of FERMCO Organizations shall:

- Increase employee awareness of the importance of quality.

- Encourage FERMCO personnel to identify and suggest improvements through the Continuous Performance Improvement Value Awareness program.

- Ensure that items that do not conform to specified requirements are controlled to prevent inadvertent installation or use.

- Ensure that any condition adverse to quality detected for items within their cognizance are identified, reported, and processed in accordance with established procedures.

- Determine and specify disposition of the nonconforming condition.

- Focus upon problem prevention and performance improvement, rather than detecting and reacting to problems after they occur.

- Evaluate and measure processes and performance to identify potential problem areas, identify trends in productivity and quality, apply lessons learned, and develop actions that can be taken to improve performance.

3.3.4 Continuous Performance Improvement and Professional Development Section of the Total Quality Management/Continuous Performance Improvement Organization shall provide support to the Continuous Performance Improvement Council.

3.3.5 FERMCO employees shall identify and report any condition adverse to quality to responsible management or through the Continuous Performance Improvement Value Awareness program.

3.3.6 Employees should know how their process contributes to the strategic goals of the organization.

3.3.7 Quality Assurance Organization shall:

- Develop site policies and procedures which govern the identification, control and disposition of deviations and corrective actions.

- Document (using the Corrective Action Report form) the significant condition adverse to quality, review the record of evaluation and specified corrective action, and verify the completion of corrective action.

- Control the issue, resolution, and return of Corrective Action Reports.

- Have authority to tag nonconforming items and ensure segregation to prevent inadvertent test, installation, or use of the items.

3.3.8 The Contracts and Acquisitions Organization shall:

- Advise requisitioners and subcontract performance inspectors of contractual quality provisions and procedures.
- Employ the necessary procurement actions to mitigate supplier-caused nonconformances when reported by the requisitioner or performance inspector.
- Establish a Cost Control System.

3.3.9 Project and Information Control Organization shall:

- Provide an overall program planning, scheduling and performance tracking system.
- Establish and implement a central tracking and commitment control system.

CONTROL NO. FER-0077

FEMP
SITE DOCUMENT SYSTEM

SDC No.	SC95-006
Effective Date:	01-20-95
EXPIRES WITH NEXT REVISION	

SITE DOCUMENT CHANGE

(For Questions Contact SME Dave Ponke, 648-6367)

1. **AFFECTED DOCUMENT NUMBER** RM-0012	2. **AFFECTED DOCUMENT PAGE NUMBER** 19

3. **TITLE OR SUBJECT:** Quality Assurance Program

4. **ACTIVITY AND AREA AFFECTED:** Requirements

5. **APPROVAL SIGNATURE:**

L. Abernathy for Division Mgr. — Date 1/19/95

6. **CHANGE:** Section 4.2.6 is changed to read as follows:

4.2.5 A system shall be established for implementation of processes to ensure that records are specified, prepared, legible, reviewed, approved, and maintained to accurately reflect completed work.

7. **DOCUMENTATION CONTROL REQUIRED ACTION**

[ ] No Procedure Action (Temporary Change)

[X] Revise affected procedure per this document.

FILING INSTRUCTIONS: File facing page 19, Document No. RM-0012 (Effective Date: 11-30-94, Revision No. 3)

4.0 CRITERION 4 - DOCUMENTS AND RECORDS

4.1 SCOPE

This criterion describes the requirements and responsibilities for establishing and implementing a system for the control of documents and the handling, collection, storage, and control of records generated at the FEMP.

4.2 REQUIREMENTS

4.2.1 A system shall be established and implemented to control preparation, review, approval, issuance, use, and revision of documents that establish policies, prescribe work, specify requirements, or establish design. The scope of the document control system shall be defined.

4.2.2 Revisions to controlled documents shall be reviewed and approved by the organization that originally reviewed and approved them. An alternative organization may be designated based on technical competence and capability.

4.2.3 A system shall be established to ensure that controlled documents are distributed to and used by personnel performing work. Timeliness guidelines shall be implemented for distribution of new or revised controlled documents.

4.2.4 Control of superseded and cancelled documents shall include measures to ensure that only correct documents are in use. Record copies should be marked "superseded" or "cancelled" and kept for a specified retention period.

4.2.6 A system shall be established for implementation of processes to ensure that records are specified, prepared, legible, reviewed, approved, and maintained to accurately reflect completed work.

The maintenance of records shall include provisions for retention, protection, preservation, traceability, accountability, and retrievability. Care shall be taken to ensure that the requirements of NARA, applicable standards, and any additional statuary requirements are met.

Evidentiary records shall have appropriate procedures controlling media type, chain of custody, and confidentiality.

4.2.7 Records shall not be erased or obliterated when revised. Instead, a single line shall be drawn through errors or items to be deleted. The person making a revision shall initial and date the revision. Changed records must undergo the same review as original quality assurance records. This includes re-review by persons who have reviewed the record prior to the changes.

4.2.8 For records that require special processing and control, such as computer codes or information on high density media or optical disks, hardware and software required to maintain and access records shall be controlled to ensure records are useable and readily retrievable.

4.2.9 Records containing data used to support CERCLA decision making shall meet the requirements defined in the Sitewide CERCLA Quality Assurance Project Plan. These records shall be contained in the Administrative Record, an official repository for programs and projects aimed at remediation of the FEMP. Contents of the Administrative record are determined by DOE and are accessible to the public.

4.2.10 Changes in automated data entries shall:

- not obscure the original entry;
- indicate the reason for change;
- be flagged as changed;
- be dated; and
- Identify the individual making the change.

6989

CONTROL NO. FER-0077

FEMP
SITE DOCUMENT SYSTEM

SDC No.	SC95-007
Effective Date:	01-20-95
EXPIRES WITH NEXT REVISION	

SITE DOCUMENT CHANGE

{For Questions Contact SME Dave Ponke, 648-6367}

1. **AFFECTED DOCUMENT NUMBER**
RM-0012

2. **AFFECTED DOCUMENT PAGE NUMBER**
20

3. **TITLE OR SUBJECT:**
Quality Assurance Program

4. **ACTIVITY AND AREA AFFECTED:**
Requirements

5. **APPROVAL SIGNATURE:**
L. Abernathy for Division Mgr. 1/25/95 Date

6. **CHANGE:** First paragraph is changed to read as follows:

4.2.6 The maintenance of records shall include provisions for retention, protection, preservation, traceability, accountability, and retrievability. Care shall be taken to ensure that the requirements of NARA, applicable standards, and any additional statutory requirements are met.

Evidentiary records shall have appropriate procedures controlling media type, chain of custody, and confidentiality.

7. **DOCUMENTATION CONTROL REQUIRED ACTION**

[ ] No Procedure Action (Temporary Change)

[X] Revise affected procedure per this document.

FILING INSTRUCTIONS: File facing page 20, Document No. RM-0012 (Effective Date: 11-30-94, Revision No. 3)

4.2.11 Approval for final disposition of Government records shall be obtained from the National Archives and Records Administration (NARA).

4.2.12 All records management systems shall have schedules for records retention and disposition in accordance with the requirements of NARA and DOE 1324.2, Records Disposition.

4.3 RESPONSIBILITIES

4.3.1 Information Resource Management Department of the Project and Information Control Organization shall:

- Develop and maintain site policies and procedures to direct the identification and control of records.
- Operate a record storage vault for the storage of quality assurance records.

4.3.2 Administrative Services Department of the Administration Organization shall:

- Establish and implement site document control system and procedures to implement that system.
- Route site-level procedural documents to interfacing organizations for review and ensure that the review and comment resolution process is completed.
- Ensure historical copies of superseded site documents are maintained.
- Develop and maintain a system which controls and lists current site documents and their latest revisions.

4.3.3 Managers of FERMCO Organizations shall:

- Implement the QA Program requirements through the use of plans and procedures which satisfy the provisions of this *QAP*. The process for developing and using plans and procedures and their implementation is outlined in RM-0016, *Management Plan - FERMCO Policies and Requirements Manual*. RM-0016 charters all functional area managers to develop plans and procedures to the requirements of their functional areas.

- Utilize the site document control procedures to establish their organization document control system.

- Obtain the required reviews and approvals for documents to be issued.

- Issue as controlled procedures.

- Route organization documents to other interfacing or impacted organizations for review and ensure that the review and comment resolution process is completed, when interfacing organizations outside the organization are implicated in the organization document. Organizations outside the organization cannot be tasked in, nor directly affected by, organizational documents; that is the sole purview of site-level documents.

- Ensure that historical copies of superseded organization documents are maintained in accordance with FERMCO procedures for record storage.

- Identify and control records within their area of responsibility.

4.3.4 Holders of Controlled Documents shall:

- Maintain the latest revision of documents until superseded.
- Verify documents against revisions.
- Dispose of superseded documents to avoid inadvertent use in subsequent work activity.

4.3.5 FERMCO Employees shall:

- Ensure that correct revisions of documents are used for performing work activities.
- Ensure that records are properly maintained and safeguarded.

4.3.6 Engineering Organization shall establish and implement a system for the control and distribution of design documents. This system shall include a master drawing index for all engineering drawings issued, which indicates the most current revision issued for each drawing.

4.3.7 FEMP Administrative Record Coordinator shall maintain the evidence files for CERCLA decision making as part of the Administrative Record, and maintain files of all other environmental sampling and analysis files which could potentially be used to support future environmental decisions.

4.3.8 Quality Assurance Organization shall:

- Perform surveillances and audits of the document control system(s).
- Assist and guide all FERMCO organization in generating, handling, storage, management, and dispositioning of QA records.
- Perform surveillances and audits of the control and storage of QA records system for the FEMP.

FUNCTIONAL CATEGORY B: PERFORMANCE

The Performance Category provides for controlling activities associated with establishing and maintaining the technical requirements for our work that includes provisions for:

- The design and procurement specifications and requirements for testing.
- The control of approved instructions, procedures, drawings, and other appropriate documents.
- The control of processes used in site restoration, environmentally related measurements, handling wastes, and in the construction and maintenance of facilities.
- Calibration of measuring and test equipment used in these processes to maintain accuracy.
- The receipt of items or items manufactured by FERMCO are identified and controlled to verify they conform to established requirements.
- Handling, storage, and shipping of materials to protect against loss of containment integrity and physical damage.
- Using approved suppliers of purchased material, equipment, and services which satisfy company requirements.
- Items (i.e., hazardous waste, environmental media, and product) to be monitored, measured, and tested.
- Monitoring and observations of associated processes during construction, operations (including environmental monitoring), and site restoration activities to determine conformance to procedural and technical requirements and to ensure continuous improvement in the quality of all products and services.
- The acceptance status of items subject to inspection and testing is known throughout these operations.

The Performance Category is composed of the following criteria:

- Criterion 5 - Work Processes
- Criterion 6 - Design
- Criterion 7 - Procurement
- Criterion 8 - Inspection and Acceptance Testing

5.0 CRITERION 5 - WORK PROCESSES

5.1 SCOPE

This criterion describes the requirements and responsibilities for the control of processes affecting all work processes. A work process includes all activities involved in performing defined tasks to achieve an objective. Work processes may include activities as planning, scheduling, accounting, project management, design, analysis, fabrication, procurement, construction, installation, testing, operation, modification, maintenance, and decommissioning.

The purpose of work process control is to ensure that standard processes and special processes are accomplished under controlled conditions. These standard processes and special processes include, but are not limited to: waste handling, packaging, certification and shipping; environmental data operations; welding; heat treating; core drilling; or nondestructive testing.

Items shall be identified and controlled to ensure their proper use. Items shall be maintained to prevent their damage, loss, deterioration. Equipment used for process monitoring or data collection shall be calibrated and maintained.

5.2 WORK REQUIREMENTS

5.2.1 Work related instructions, procedures, and other forms of direction shall be developed, verified, validated and approved by technically competent personnel, and shall be provided to employees doing the work.

5.2.2 Work shall be performed to established technical standards and administrative controls. Work shall be planned, authorized and accomplished under controlled conditions using technical standards, instructions, procedures, or other appropriate means of detail commensurate with the complexity and importance of the work.

5.2.3 FERMCO personnel performing work are responsible for the quality of their work.

5.2.4 Managers shall review work and related information to ensure that the desired quality is being achieved and to identify areas needing improvement.

5.3 IDENTIFICATION AND CONTROL OF ITEMS REQUIREMENTS

5.3.1 A system shall be established for the implementation of processes to identify, control, and maintain items; control consumables and items with limited shelf life; prevent the use of incorrect or defective items; and control samples.

5.3.2 A system for the identification and control of items shall be established to ensure their proper use and traceability. Items shall be maintained to prevent their damage, loss, or deterioration.

5.4 HANDLING, STORING AND SHIPPING REQUIREMENTS

5.4.1 A system shall be implemented for a process to control the handling, storage, shipping, cleaning, and preservation of items to prevent damage, loss, or deterioration. Marking and labeling of items shall be maintained throughout packaging, shipping, handling, and storage.

5.4.2 Requirements for offsite transportation shall be established and implemented. Special protective measures shall be specified and provided when required to maintain acceptable quality.

5.4.3 Low-level waste shipments to the Nevada Test Site shall meet the requirements of NVO-325, Nevada Test Site Defense Waste Acceptance Criteria, Certification, and Transfer Requirements.

5.5 CALIBRATION AND MAINTENANCE OF MONITORING AND DATA COLLECTION EQUIPMENT REQUIREMENTS

5.5.1 A system shall be established for the implementation of a process to control the calibration, maintenance, and use of measuring and test equipment used for monitoring and data collection.

5.5.2 Monitoring and data collection equipment shall be of the accuracy and type suitable for the intended use. The types of equipment shall be specified in work documents. Equipment shall have calibration certifications traceable to national standards, where possible. Equipment on which calibration is overdue shall be tagged to prevent use until calibrated.

5.6 WORK RESPONSIBILITIES

5.6.1 Project and Information Control Organization shall:

- Ensure overall program integration activities are implemented.
- Ensure site planning and scheduling activities are completed.
- Perform project budgeting and analysis activities.
- Establish a directive management system.

5.6.2 Managers of FERMCO Organizations shall:

- Develop budget and schedules.
- Clearly identify authorities, responsibilities, and interfaces, both internal and external, regarding the work process in appropriate work process documents.
- Ensure that activities affecting quality under their cognizance are prescribed and controlled by instructions, procedures, or drawings.

- Ensure that work done by their organizations is performed to appropriate technical standards or administrative controls.

- Establish policies and procedures for all aspects of work control and performance consistent with applicable DOE orders and other regulations.

- Ensure procedures, instructions, and other work control documents include requirements for process controls and formal qualifications. Work-related forms of direction shall include clearly identifiable caution statements when warranted.

- Establish processes to identify, control, and maintain items; control consumables and items with limited shelf life; prevent the use of incorrect or defective items; and control samples.

- Conduct a self-evaluation process to monitor performance for use in self-assessment and continuous improvement activities.

- Ensure that employees are provided the necessary training, resources, and direction to perform their work assignments. This includes familiarity with tools, equipment, and quality requirements.

- Ensure that applicable employees are trained to new conditions if the work process is changed.

5.6.3 Managers of FERMCO Organizations should include personnel performing a process in process improvement activities.

5.6.4 FERMCO Employees shall:

- Perform work to approved requirement documents (e.g., plans, procedures, drawings, and specifications).

- Perform work in a sequence consistent with the prerequisite activities.

- Perform work with the proper tools and equipment.

5.6.5 FERMCO Employees should set goals for doing the work correctly the first time and contribute to improved work processes.

5.6.6 Quality Assurance Organization shall:

- Perform reviews, surveillances, assessments, and audits of work activities and implementing documents to ensure compliance to specified programmatic requirements.

- Inspect work activities and implementing documents to ensure compliance with specified requirements.

- Provide QA inputs into planning of site project work plans.

5.7 IDENTIFICATION AND CONTROL OF ITEMS RESPONSIBILITIES

5.7.1 FERMCO Organizations shall:

- Specify methods and requirements for identifying environmental samples and other items.

- Assign custody authority for environmental samples.

5.7.2 Quality Assurance Organization shall:

- Review work and procurement documents for item identification provisions.

- Verify that identification has been applied to items in accordance with specified requirements.

5.8 HANDLING, STORING AND SHIPPING RESPONSIBILITIES

5.8.1 FERMCO Organizations shall:

- Ensure procedures are established for controlling the handling, storage, shipment, and disposal of radioactive and hazardous waste material including chain-of-custody, travellers, and other measures necessary to control environmental samples and drums and other containers of waste.

- Implement chain-of-custody procedures for controlling the handling, storage, shipping, and disposal of environmental samples. These procedures for environmental samples shall be taken from the *SCQ* (as approved by the DOE and EPA).

- Include handling, shipping, and storage requirements in equipment specifications, drawings, and procurement documents, as applicable. Items shall be maintained to prevent their damage, loss, or deterioration.

5.8.2 Quality Assurance Organization shall:

- Plan and perform audits and surveillances, including the verification of compliance with sitewide requirements for interim storage of hazardous wastes.

- Certify low-level waste shipments.

- Verify the acceptability, marking, and content of each waste package.

- Examine highway transport vehicles used for off-site hazardous waste shipments.

- Review work and procurement documents to assure that provisions for item identification are specified.

5.9 CALIBRATION AND MAINTENANCE OF MONITORING AND DATA COLLECTION EQUIPMENT RESPONSIBILITIES

5.9.1 FERMCO Organizations shall:

- Identify devices which require calibration.
- Establish systems to calibrate such devices. Calibration of equipment for environmental sampling shall be in accordance with the *SCQ* (as approved by DOE and EPA).
- Establish a system to control the use of such devices.

6.0 CRITERION 6 - DESIGN

6.1 SCOPE

This criterion describes the requirements and responsibilities for the implementation of a formal design control process. Design work is based on sound engineering/scientific principles and appropriate standards. The requirements of this criterion apply to all organizations that perform design or are responsible for design performed by contractors or subcontractors.

6.2 REQUIREMENTS

6.2.1 A program for the design of items and processes shall be established and implemented using sound engineering/scientific principles and appropriate standards.

A formal design process shall be established which provides control of design inputs, outputs, verification, configuration and design changes, documentation, records, and technical administrative interfaces.

The administrative interface process shall clearly indicate responsibilities for design output document activities including as-built mark-up and updating during project construction/production phases, media use and transmission, document control, and records management.

6.2.2 Design inputs (such as the design bases) are to be correctly translated into design outputs (such as specifications, drawings, procedures, and instructions).

Design outputs are to be suitable for intended use. Aspects critical to the safety or reliability of the designed Systems, Structures, and Components shall be identified during the design phase.

Systems, Structures, and Components important to safety shall be subject to more stringent operational criteria and verification requirements than those not important to safety.

6.2.3 Changes to final designs (including nonconforming items that are dispositioned "use as is" or "repair") are to be subjected to design control measures commensurate with those applied to the original design and approved by the organization that approved the original design or a qualified designate.

Temporary modifications shall receive the same levels of control as the designs of permanent modifications.

6.2.4 Design interface controls (internal and external between participating design organizations and across technical disciplines) for the purpose of developing, reviewing, approving, releasing, distributing, and revising design inputs and outputs are to be defined.

6.2.5 Design records, maintained to provide evidence that the design was properly accomplished, are to include not only the final design output and revisions to the final output, but also the important design steps (calculations, analyses, and computer programs, for example) and the sources of input that support the final output.

6.2.6 The acceptability of design activities and documents, including design inputs, processes, outputs, and changes, are to be verified.

Design verification is a formal documented process to establish that the resulting Systems, Structures, and Components will be fit for the intended use.

Computer programs are to be proven through previous use, or verified through testing or simulation prior to use.

6.2.7 The data collection process for characterizing environmental processes and conditions shall be defined, controlled, verified, and documented.

6.2.8 Design verifications are to be conducted by qualified personnel who are knowledgeable of the design and its intent. These personnel may be from the same organization, but must not be those who performed the original design.

The extent and number of design verifications shall be based on a graded approach and shall depend on the design product's complexity and importance to project success.

6.2.9 Design verification methods are to include, but are not limited to, technical reviews, peer reviews, alternate calculation, and qualification testing.

Separate verification may not be needed for multiple uses of identical or previously proved designs, unless they are intended for different applications or the performance criteria are different.

6.2.10 When a test program is used to verify the acceptability of a specific design feature, the test program is to demonstrate acceptable performance under conditions that simulate the most adverse design conditions that are expected to be encountered.

6.2.11 Design verification and validation work shall be completed and documented before approval and implementation of the design outputs are used by other organizations for design work and before they are used to support other activities such as procurement, fabrication, construction, or experimentation.

When timing cannot be achieved, the unverified portion of the design shall be identified and controlled. In all cases, design verifications shall be completed before relying on the Systems, Structures, and Components to perform its function and before installation becomes irreversible.

6.2.12 Changes to computer software shall be controlled to assess the potential impact of the change on the performance of the software.

6.2.13 As-built drawings and shop drawings shall be maintained after production or construction to show actual configuration.

6.3 RESPONSIBILITIES

6.3.1 Engineering Organization shall:

- Implement a formal design program to ensure that engineered systems are designed using sound engineering/scientific principles. This program is to include provisions to control design inputs, processes, outputs, changes, interfaces, records, and organization interfaces.

  Designs shall provide for appropriate inspection, testing, and maintenance to ensure continuing reliability and safety of the Systems, Structures, and Components. Inspections and tests shall be conducted according to a graded approach.

  The design shall consider the expected use and life expectancy of the Systems, Structures, and Components in order to address appropriate disassembly and disposal requirements.

- Plan, coordinate, and document design of engineered systems used in protecting human health, safety, and the environment.

- Incorporate quality-affecting design requirements in design documents, such as drawings, specifications, and test procedures.

- Coordinate and interface with organizations required to participate in the design process.

- Assign responsibility for determining technical correctness of inputs and translations into design documents.

- Assure Safe Shutdown Status' are included in documents

6.3.2 Quality Assurance Organization shall:

- Review design documents to ensure that quality attributes are specified and that design control procedures have been followed.
- Provide QA system requirements into design documents.
- Perform surveillances and audits to verify that the design process meets established requirements.
- Inspect to design specifications.

7.0 CRITERION 7 - PROCUREMENT

7.1 SCOPE

This criterion describes the requirements and responsibilities for the preparation, review, and control of procurement documents. It also specifies the requirements and responsibilities for the control of purchased material, equipment, and services.

7.2 REQUIREMENTS

7.2.1 A program shall be established and implemented to ensure that purchased items and services meet established requirements and perform as expected.

The applicable requirements of 10 CFR Part 830.120 Nuclear Safety Management and of this *QAP* shall be applied to suppliers and subcontractors who perform work under the prime cognizance of FERMCO or work that affects the responsibility of FERMCO.

7.2.2 Applicable technical and administrative requirements (such as specifications, codes, standards, tests and inspections, and acceptance criteria) shall be invoked for procurement of items and services.

Procurement documents shall include any specifications, standards, and other documents referred to by the design documents. Procurement documents shall clearly state test/inspection requirements and acceptance criteria for purchased items and services.

Critical parameters and requirements such as submittals, product-related documentation, nonconformance requirements, administrative documentation, personnel or materials qualification, tests, inspections, and reviews shall be specified as line items.

7.2.3 Appropriate controls shall be established and implemented for the selection, determination of suitability, evaluation, and receipt of commercial-grade items to ensure that commercial-grade items perform as expected.

7.2.4 Prospective suppliers are to be evaluated to ensure that only qualified suppliers are selected. The prospective suppliers shall be evaluated to verify their capabilities to meet performance and schedule requirements.

Measures for evaluating and selecting suppliers may include:

- a review of the supplier's history for providing identical or similar items or services;
- an assessment of the supplier's capability based on evaluation of its facilities, personnel, and programs; or
- an evaluation of documented qualitative and quantitative information provided by the supplier.

7.2.5 Procurement of laboratory subcontractors for analyzing environmental samples shall be strictly controlled. Only laboratories that have a demonstrated capability to provide the level of data quality required for a program or project shall be contracted.

7.2.6 The qualified suppliers are to be evaluated periodically to confirm their continuing capabilities to provide acceptable products and services. Required supplier monitoring shall be performed during the procurement process to ensure that acceptable items or services and schedule requirements are being met.

Monitoring may include:

- surveillance of work activities;
- inspection of facilities and processes;
- review of plans and progress reports;
- processing of change information; and
- review and disposition of nonconformances.

7.2.7 Purchased items and services are to be accepted using specified methods (such as source verification, receipt inspection, pre-installation and post-installation tests, and certificates of conformance, or a combination of these methods).

7.2.8 Before an item is used or placed in service, procurement, inspection, and test requirements are to be satisfied.

7.2.9 The procurement system shall include provisions for inspections. Requirements for inspections shall be obtained from design documents. Inspections shall be adequate to ensure conformance with purchase requirements including verifying that specified documentation has been provided by the supplier. The inspections shall verify that items were not damaged during shipment.

Inspection may include the following methods:

- inspections of materials or equipment at the suppliers's plant;
- receipt inspection of the shipped items;
- review of objective evidence such as certifications and reports and;
- verification of testing of items prior to or following shipment.

7.2.10 The actual performance of items is to be compared with original performance criteria. User group surveys, supplier evaluations, inspection and test results, and performance data are to be reviewed to determine procurement effectiveness.

7.2.11 The quality of purchased items and services is to be verified at intervals and to a level consistent with the complexity, risk, quantity, and procurement frequency of the items or services. A graded approach, as specified in Appendix D - Graded Approach for Quality Levels, shall be used to ensure that the resources applied are commensurate with the importance of the result to the achievement of site goals.

7.2.12 Verifications are to be executed in all phases of procurement. This may require verification of suppliers below the first tier.

7.2.13 The nonconformance and corrective action process shall address a formalized process to document occurrences when purchased items or services do not meet specifications.

7.2.14 In cases where there are indications that suppliers knowingly supplied items or services of substandard quality, FERMCO shall report the information to the DOE Office of Inspector General.

7.2.15 Suppler generated documents shall be accepted through the procurement system and controlled and processed by the end-user organization according to the provisions of Criterion 4 (Document and Records).

These documents may include certificates of conformance, drawings, analyses, test reports, maintenance, data, nonconformances, corrective actions, approved changes, waivers, and deviations.

7.3 RESPONSIBILITIES

7.3.1 Contracts and Acquisitions Organization shall establish and implement a management system to ensure that the procurement process is documented and controlled and that procured items and services conform to established specifications.

This process shall provide for the following, as appropriate: procurement source evaluation and selection, evaluation of objective evidence of quality furnished by the supplier, source inspections, supplier audits, and examination of deliverables.

7.3.2 FERMCO Requisitioners shall identify, control, and implement procurement activities to ensure adequate quality (including listing the quality level in procurement documents) and to ensure that procured items and services conform to established specifications.

7.3.3 Contractors and Suppliers shall meet quality requirements for work performed or for items and services provided by their subcontractors and suppliers.

7.3.4 Quality Assurance Organization shall:

- Review procurement documents for incorporation of quality assurance requirements.
- Evaluate potential supplier's QA Program, procedure documents, and QA record submittals for concurrence with quality requirements.
- Perform supplier audits.
- Perform source surveillances
- Participate with Procurement in supplier evaluations.
- Verify that purchased items and services meet procurement requirements (e.g., receipt inspection).
- Perform source inspections and reviews.

8.0 CRITERION 8 - INSPECTION AND ACCEPTANCE TESTING

8.1 SCOPE

This criterion describes requirements and responsibilities for performing inspection and acceptance testing. Inspection and acceptance testing of specified items and processes shall use established acceptance and performance criteria and require calibration and maintenance of equipment used for inspections and tests.

Inspections and tests shall be conducted according to a graded approach. Results of these activities shall be documented and retained as project records.

8.2 INSPECTION REQUIREMENTS

8.2.1 A program shall be established and implemented to specify when and what type of inspections (e.g., source, in-process, final receipt, maintenance, and in-service) are required.

Administrative controls and status indicators are to be used to preclude inadvertent bypassing of required inspections and to prevent inadvertent operation of the item.

8.2.2 The inspection program may be implemented by or for the organization performing the work to be inspected. When an organization performs its own inspections, personnel within that organization are not to inspect their own work for acceptance.

Final acceptance of the System, Structure, and Components (SSCs) shall be verified and documented by organization having the final responsibility for the (SSCs).

8.2.3 The level of inspection and degree of independence of inspection personnel shall be based on risk and complexity. Inspections and tests shall be conducted according to a graded approach.

8.2.4 Provisions shall be established to ensure that inspection planning is properly accomplished. Planning activities are to identify item characteristics and processes to be inspected, the inspection techniques, the acceptance criteria, and the organization responsible for performing the inspection.

Systems, Structures, and Components requiring inspection/test are to be identified early in the design phase. Acceptance parameters and other requirements such as inspection/test equipment or qualified inspection/test personnel shall be specified in design documents.

The types of Systems, Structures, and Components and the length of time they are to remain in storage shall be considered when generating the inspection or test plan.

8.2.5 When appropriate, inspection hold points shall be defined beyond which work is not to proceed until inspection has been completed.

8.2.6 When acceptance criteria are not met, deficiencies are to be documented, resolved, and corrected areas are to be reinspected.

8.2.7 Inspection/test documentation shall contain provisions for as is applicable:

- identification of characteristics to be examined;
- required qualifications of individuals who perform the examination;
- a description of the examination methods including equipment and calibration requirements;
- acceptance and rejection criteria;
- suitable environmental conditions;
- required safety measures; and
- mandatory hold points, when required.

8.2.8 Inspection/test results shall be evaluated and verified by authorized personnel to document that all requirements have been satisfied.

8.2.9 Records shall identify the following as applicable:

- item tested;
- date of test
- tester or data tester;
- observations;
- results and acceptability; and
- action taken concerning any deviations noted.

8.3 ACCEPTANCE TESTING REQUIREMENTS

8.3.1 A test control program shall be established as required and implemented for acceptance testing to demonstrate that items will perform as intended. The test control program is to include, as appropriate, bench tests and proof tests before installation, pre-operational tests, post-maintenance tests, post-modification tests, and operational tests all based on a graded approach.

8.3.2 The testing program may be implemented by or for the organization performing the work to be tested. When an organization who installed the work performs its own testing, personnel within that organization are not to test their own work for acceptance unless a third-party verification from a qualified third party is obtained, where applicable.

8.3.4 The criteria that specifies when testing is required shall be defined. Administrative controls and status indicators, such as tags and labels, are to be used to preclude inadvertent bypassing of required tests and to prevent inadvertent operation of the item.

8.3.5 Organizations shall ensure that test procedures are developed and include instructions and prerequisites to perform the test, test article configuration, use of test equipment, acceptance criteria, inspection hold points as required, and provisions of recording test data and its review for completeness and accuracy of the results.

8.3.6 When acceptance criteria are not met, corrected areas are to be retested, after being corrected, to original requirements.

8.4 ENVIRONMENTAL TESTING REQUIREMENTS

8.4.1 Chemical, Radiochemical, Geotechnical, and Asbestos analyses and tests in support of environmental studies shall meet the requirements specified in the *SCQ* (as approved by DOE and EPA).

8.4.2 Data collected for environmental projects shall be validated at the appropriate Analytical Support Level (ASL) in accordance with the requirements of the *SCQ* (as approved by DOE and EPA) prior to use.

8.5 MEASURING AND TEST EQUIPMENT REQUIREMENTS

8.5.1 A program shall be established and implemented to control the calibration, maintenance, accountability, and use of equipment used for acceptance of items during inspection and testing.

8.5.2 The types of equipment covered by the program (such as instruments, tools, gages, reference and transfer standards, and nondestructive examination equipment) are to be defined.

8.5.3 Measuring and test equipment is to be calibrated at specified intervals (or immediately before or after use) on the basis of the item's required accuracy, intended use, frequency of use, stability characteristics, and other conditions affecting its performance.

When applicable, measuring and test equipment shall be calibrated to standards traceable to the National Institute of Standards and Technology (NIST).

8.5.4 Measuring and test equipment is to be labeled, tagged, or otherwise controlled to indicate its calibration status and ensure traceability to calibration data.

Documentation showing traceability to standards shall be maintained for each piece of measuring and test equipment.

8.5.5 Measuring and test equipment is to be calibrated against standards having an accuracy that will ensure that the equipment being calibrated will be within required tolerances. If nationally recognized standards exist, calibration standards are to be traceable to them. Except where calibration standards with the same accuracy as the instruments being calibrated are shown to be adequate for the requirements, calibration standards are to have a greater accuracy than the standards being calibrated.

8.5.6 Measuring and test equipment found out of calibration shall be tagged or segregated and not used until it is recalibrated. The acceptability of items measured, inspected, or tested with an out of calibration device is to be determined.

8.6 RESPONSIBILITIES

8.6.1 Managers of applicable FERMCO Organizations:

- Establish and implement procedures or identify standards for inspections and acceptance testing of engineered systems, components, or parts according to the design specifications and planning requirements.

- Establish and implement procedures to ensure that measuring and test equipment is of the proper type, range, and accuracy, and is properly calibrated, maintained, and used according to design specifications.

- Identify measuring and test equipment which require calibration. Identify applicable standards for the calibration requirements. Documentation showing traceability to standards shall be maintained for each piece of measuring and test equipment.

- Establish chemical analysis controls for the test and examination services provided to support site restoration, environmental monitoring, and health programs.

- Ensure personnel perform the test, record data, and implement corrective action for nonconforming conditions.

8.6.2 FERMCO Employees shall:

- Check items supplied to their work process to ascertain that items are correct and suitable for use.
- Implement procedures for inspection and acceptance activities to ensure that items and services meet established requirements
- Ensure that measuring and test equipment used is calibrated, maintained, and conforms to established specifications.

8.6.3 Quality Assurance Organization shall:

- Review inspection plans for construction, restoration, waste handling, and site supporting activities as part of independent overview activities.
- Review and approve test procedures.
- Provide independent verification of compliance to test requirements.
- Ensure deviations are resolved.
- Prepare and issue inspection plans.
- Perform in-process and final inspections.
- Verify tests.
- Prevent inadvertent use of nonconforming materials.

8.6.4 The Engineering Organization shall prepare test procedures, designate test acceptance criteria, monitor test performance, and evaluate test results.

FUNCTIONAL CATEGORY C: ASSESSMENT

The Assessment Category provides for periodic assessment of the QA Program to determine its effectiveness and to promote quality improvement. This category:

- Describes the organizational freedom and authority of the QA organization and its role in conducting audits and appraisals.
- Includes provisions for the qualification of persons conducting assessments.
- Provides for the auditing of operations, systematic handling of nonconforming conditions, and learning through corrective actions, trending, and root cause analyses.

The Assessment Category is composed of the following criteria:

- Criterion 9 - Management Assessment
- Criterion 10 - Independent Assessment

9.0 CRITERION 9 - MANAGEMENT ASSESSMENT

9.1 SCOPE

This criterion describes the requirements and responsibilities for regularly assessing and documenting the adequacy and effectiveness of the QA program in providing the framework for FERMCO's achieving its mission and objectives.

Management at all levels are required to periodically assess the integrated QA Program and its performance, and to identify and correct problems that hinder the organization from achieving its quality objectives.

These management assessments should focus on whether the integrated QA management system is accomplishing the goal of continuous improvement of the safety and reliability of products and services to effectively meet the expectations of external and internal customers.

9.2 REQUIREMENTS

9.2.1 A program of planned and periodic management assessments shall be established and implemented. Implementation of the program is to focus on how well the integrated QA Program is working by identifying barriers which hinder the organization from achieving its objectives in accordance with quality, safety, and environmental requirements.

9.2.2 Management assessments shall be conducted in accordance with a plan, and should focus on management elements that affect work processes, such as strategic planning, organizational interfaces, cost control, use of performance indicators, staff training and qualifications, and supervisory oversight and support.

Effective management assessments should also assess such areas as the state of employee knowledge, motivation, and morale; the amount of mutual trust and communication among workers; the existence of an atmosphere of creativity and improvement; and the adequacy of human and material resources.

Direct observation of work is a particularly effective method of management assessment, because it places the assessor in the position to become aware of all interactions at a work location.

Other methods of assessment, which are most effective when combined with work observation, include interviews of workers, reviews of documentation, and conduct of drill or exercises.

9.2.3 Implementation of the management assessment program may be delegated in part, but senior management is to retain overall responsibility for the program. Direct participation by senior management is essential, but the process should involve all levels of management.

9.2.4 Management assessment results are to be documented. Senior management is to take prompt action and document resulting decisions in response to recommendations which result from the management assessment process. Follow-up is to include an evaluation of the effectiveness of management's actions.

9.3 RESPONSIBILITIES

9.3.1 Managers of FERMCO Organizations shall:

- Conduct annual assessments of performance based on compliance and performance data from internal evaluations and independent assessments.
- Take prompt action and document resulting decisions in response to recommendations which result from the management assessment process.

9.3.2 FERMCO's Senior Management shall:

- Conduct an overall assessment of FERMCO performance using results from the individual organization assessment activities.
- Monitor and guide those organizations responsible for corrective action.

9.3.3 FERMCO's Ombudsman shall provide the FERMCO President and/or other appropriate management representatives with direct information from FERMCO employees and with trend analysis to augment the other management assessment methods.

10.0 CRITERION 10 - INDEPENDENT ASSESSMENT

10.1 SCOPE

This criterion describes the requirements and responsibilities for the implementation of an independent assessment program. The FERMCO independent assessment program evaluates the adequacy and effectiveness of activities for compliance with applicable requirements.

The independent assessment process should use a performance-based approach with emphasis on results and with compliance viewed as the baseline. Assessments should be conducted on activities that most directly relate to final objectives and should emphasize safety, reliability, and product performance. Independent assessments may include such methods as inspections, peer and technical reviews, audits, surveillances, or combinations thereof.

10.2 REQUIREMENTS

10.2.1 A program for the planning and performance of independent assessments shall be established and implemented. The FERMCO Quality Assurance organization shall be primarily responsible for sitewide independent assessments.

As such, the Director of Quality Assurance reports directly to the President of FERMCO, and has no responsibilities regarding the achievement of FERMCO objectives which would affect the Quality Assurance Director's or the organization's independence.

Implementation shall focus on improving items and processes by emphasizing line organization's achievement of quality in compliance to environmental, safety, and health requirements.

10.2.2 Personnel performing independent assessments are to monitor work performance, identify non-compliance activities and other abnormal performance and precursors of potential problems, identify opportunities for improvement, document and report results to a level of management having the authority to effect corrective action, and verify satisfactory resolution of problems.

10.2.3 Personnel performing independent assessments shall have the necessary technical knowledge to accurately observe and evaluate activities being assessed and to focus on improving the quality of the processes that lead to achieving compliance to environmental, safety and health, and remediation requirements.

10.2.4 Personnel performing independent assessment are not to have direct responsibilities in the area they are assessing.

10.2.5 Independent assessments shall be conducted using criteria that address environmental, safety and health, and remediation requirements. The assessments shall also describe acceptable work performance and promote improvement. They shall include an evaluation to determine whether technical requirements, not just procedural compliance, are being met.

10.2.6 Scheduling of assessments and allocation of resources shall be based on status, risk, and complexity of the item or process being assessed. Scheduling shall be flexible and additional attention shall be given to areas of questionable performance.

10.2.7 Assessment results (including identified deficiencies) shall be tracked for resolution. These assessment results shall be evaluated to determine whether similar deficiencies exist elsewhere.

10.2.8 Assessment findings shall be resolved by management having responsibility in the area assessed.

10.2.9 Follow-up reviews of deficient areas shall be conducted to verify corrective actions have been implemented and shall validate the corrective action by measuring their effectiveness.

10.2.10 FERMCO management shall respond to assessments and include the following, as applicable: action to correct the deficiency; root cause identification; actions taken to prevent recurrence; lessons learned; and actions to be taken for improvement.

10.3 RESPONSIBILITIES

10.3.1 Quality Assurance Organization shall:

- Establish and implement independent assessments that include surveillances, appraisals, reviews, audits, and overview of quality inspection activities.
- Document and provide activity reports to line and staff management.
- Identify promptly and address, as soon as practical, conditions needing corrective actions.
- Perform follow-up actions to verify implementation and effectiveness of response actions.
- Validate corrective actions by measuring their effectiveness.
- Track identified action items for resolution and evaluate to determine whether similar deficiencies exist elsewhere.

10.3.2 Other FERMCO Organizations shall:

- Grant access to records for all FERMCO Quality Assurance auditors and surveillance personnel, as well as DOE and EPA assessors.
- Establish and implement independent assessments, when required, that include inspections, surveillances, tests, and reviews.
- Document and report, when performed, independent assessment results to line management.
- Identify promptly and address as soon as practical conditions needing corrective actions.

- Perform follow-up actions to verify implementation and effectiveness of the response action (including prevention of recurrence).

10.3.3 Managers of FERMCO Organizations shall:

- Identify and determine the cause and extent of significant conditions adverse to quality.
- Provide the response to identified deficiencies.
- Take action to prevent recurrence.

10.3.4 Personnel performing assessments should focus on improving output quality and process effectiveness by emphasizing continuous improvement requirements. Assessment personnel should not reinterpret or redefine the requirements specified in approved programs. The assessors' responsibilities include:

- evaluating work performance and process effectiveness;
- identifying abnormal performance and potential problems;
- finding opportunities for improvements;
- documenting and reporting results; and
- verifying satisfactory resolutions of reported.

FERMCO ORGANIZATION CHART*

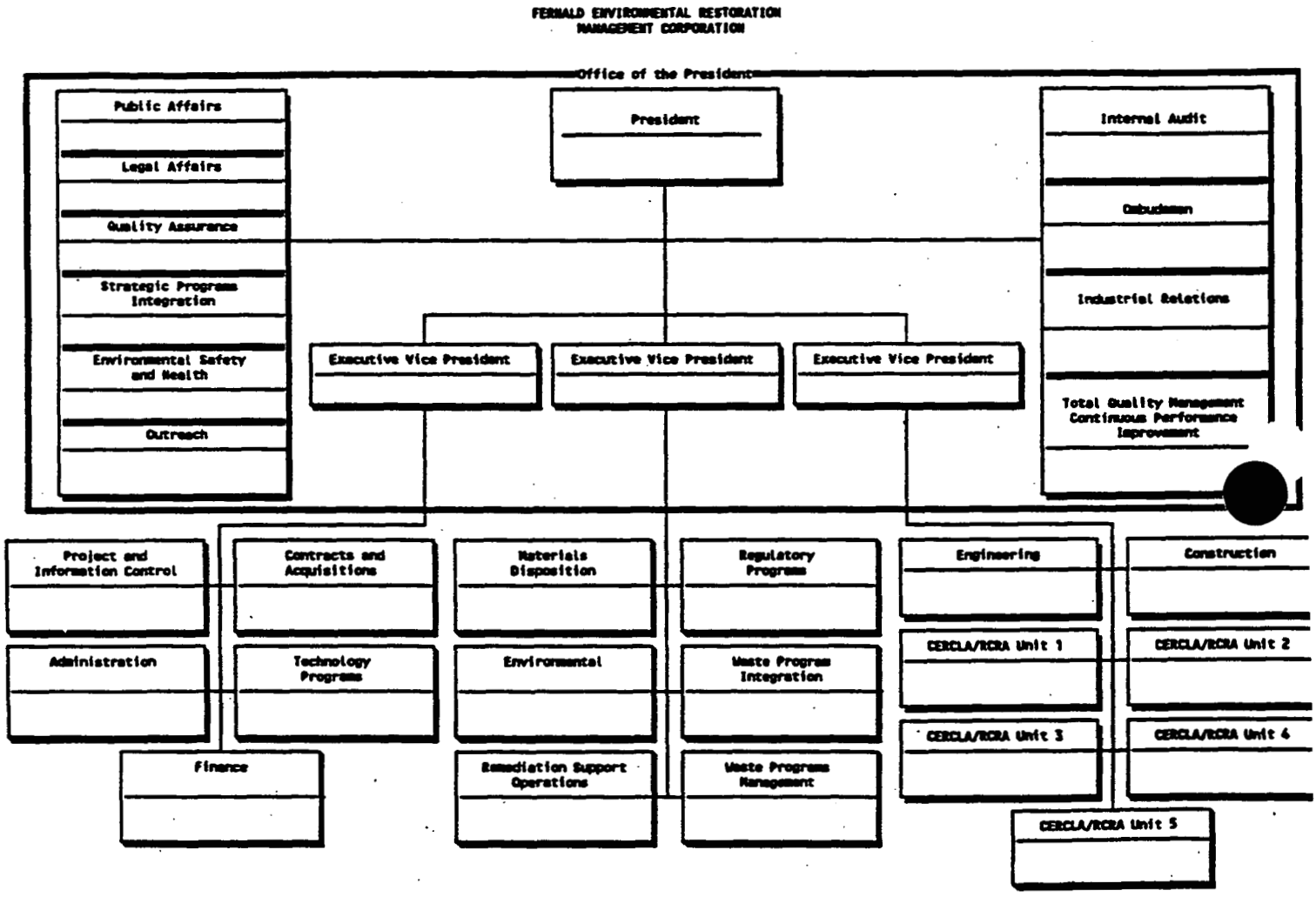

*These positions are updated and described in more detail in RM-0016, Management Plan - FERMCO Policies and Requirements Manual, which take precedence over the summaries given here.

FERMCO ORGANIZATIONS AND FUNCTIONS*

PRESIDENT	• Sets QA Policy • Authorizes Implementing Procedures
QUALITY ASSURANCE	• Quality Assurance Program Coordination • Quality Assurance Engineering • Product/Waste Certification • Certification/Qualification • Environmental/Regulatory Assurance Overview Activities • Audits and Surveillances • Training and CPI Effectiveness Assessment • Radioactive/Hazardous Waste Receipt & Shipment Certification • Prime QA & Waste Certification Liaison w/NTS • Corrective Action Management system • Review Procurement and Engineering Design documents
CONTRACTS & ACQUISITIONS	• Procurement and Materials Management
FINANCE	• Financial Planning & Accounting
ADMINISTRATION	• Human Resources • Employee Development • Forms and Procedures Development • Centralized Training • Certification/Qualification • Safeguards & Security • Continuous Performance Improvement
CONSTRUCTION	• Manage All Construction Subcontracts • Provide Construction Services to CRUs and for New Facilities and Facility Modifications. • Identify and Implement Construction Approaches to Remediation • Construction Planning & Coordination
ENGINEERING	• Engineering Services/Design Control/Risk Assessment • Long Range Planning • Administrative Home for FERMCO Remediation and Project Engineers • Treatability Development • Design New Capital Improvements and Major Modifications

*This chart is provided to illustrate primary functions of FERMCO organizations. They are updated and described in more detail in RM-0016, Management Plan, which takes precedence over the summaries given here.

FERMCO ORGANIZATIONS AND FUNCTIONS (continued)*

ENVIRONMENTAL	• Overall RCRA/CERCLA Oversight of FEMP • Resource Management and Technical Support of CRUs • CERCLA/RCRA Integration Support • Manage SCO Implementation for CRU Activities • Assist in Applying Lessons Learned throughout Environmental Programs Organization • Supply Laboratory Services
ENVIRONMENTAL PROGRAMS (CERCLA/RCRA UNIT TEAMS)	• Establish and Manage Project Activities • Plan and Manage Budget and Schedule for Performance of Work • Monitor and Control Costs • Adhere to Safety Standards • Strive for Continuous Improvement
ENVIRONMENTAL SAFETY AND HEALTH	• Radiological/Industrial Safety • Emergency Preparedness and Response Services • Engineering and Fire Services • Industrial Hygiene • Medical Services • Environmental Management • Environmental Monitoring, Surveillance, and Characterization • Sampling and Data Collection Activities
INTERNAL AUDIT	• Operational and Financial Audits
LEGAL AFFAIRS	• Legal Advice • Legal Defense • Provide Guidance on Requirements and Interpretation of Environmental, Procurement, Labor, and Employment Laws • Patent and Proprietary Rights with respect to Technology Development
MATERIAL DISPOSITION	• Identify waste material disposal sites • Understand requirements and sensitivities of waste disposal sites
OMBUDSMAN	• Quick Link Between President and Concerned Employees

*This chart is provided to illustrate primary functions of FERMCO organizations. They are updated and described in more detail in RM-0016, Management Plan, which takes precedence over the summaries given here.

FERMCO ORGANIZATIONS AND FUNCTIONS*

PROJECT AND INFORMATION CONTROL	• Maintain Cost, Schedule, And Technical Baselines • Commitment Control • Program Integration • Site Planning and Scheduling • Project Budgeting and Analysis • Information Systems Services and Coordination • Computer Operations Coordination • Records Management/Document Control
PUBLIC AFFAIRS	• Public Affairs • Employee Communication • Public Information/News Media Interface
TECHNOLOGY PROGRAMS	• Develop and maintain options for technology application or demonstration • Support CRUs and Organizations in the identification of technology sources • Integrate viable technologies into the FEMP remedial activities • Conduct DOE-Headquarters Office of Technology Development - Sponsor Technology Demonstration and Development Programs
REMEDIATION SUPPORT OPERATIONS	• Support Contractors With Services Common To Or Associated With Other Site Systems • Operate And Maintain Site Facilities (such as treatment plants and utility systems) • Safe Shutdown Planning

*This chart is provided to illustrate primary functions of FERMCO organizations. They are updated and described in more detail in RM-0016, Management Plan, which takes precedence over the summaries given here.

FERMCO ORGANIZATIONS AND FUNCTIONS*

REGULATORY PROGRAMS	• Develop and maintain Regulatory Policy • Develop and maintain a safe and environmentally acceptable operating envelope • Develop and maintain a strategic vision for site restoration • Liaison with regulatory agencies • Manage NEPA compliance • Support a focused public affairs program • Characterize sitewide operations and plans in terms of regulatory compliance and worker and public health and safety • Submit applications for environmental permits • Interpret environmental regulations; provide guidance on impacts and compliance requirements
STRATEGIC PROGRAM INTEGRATION	• Program Integration and Documentation • Compliance Baseline Development and Monitoring • Program Assessment and Reporting • Efficiency/Cost Savings Awareness • Added Value Opportunities • Operational Readiness Program • Conduct of Operations • Occurrence Reporting
WASTE PROGRAMS INTEGRATION	• Recycle options for waste and scrap materials
TOTAL QUALITY MANAGEMENT/CONTINUOUS PERFORMANCE IMPROVEMENT	• Assists in development of a continuous performance improvement culture and improved labor relations. • Provides training and facilitation in continuous performance improvement methods and philosophy to improve work processes. • Administers the Value Awareness employee suggestion program
OUTREACH	• Assesses and develops employee and organizational skills to enhance job performance and improve communications, teamwork and project expectations. • Supports the workforce transition to prepare employees for changing responsibilities and operation of the Career Development Center.

*This chart is provided to illustrate primary functions of FERMCO organizations. They are updated and described in more detail in RM-0016, Management Plan, which takes precedence over the summaries given here.

FERMCO ORGANIZATIONS AND FUNCTIONS*

WASTE PROGRAM MANAGEMENT	• Materials Control and Accountability • Elements and programmatic controls necessary to manage hazardous, radioactive and solid waste compliance at active treatment, storage, and disposal (TSP) facilities. • Includes generation, characterization, transport, processing, storage, treatment, and disposal of radioactive, solid, and hazardous waste. • Manage All Waste Materials • Support Characterization • Waste Management Programs
INDUSTRIAL RELATIONS	• Participates in the collective bargaining process • Labor Harmony • Represents FERMCO in all labor management processes • Employee Relations

*This chart is provided to illustrate primary functions of FERMCO organizations. They are updated and described in more detail in RM-0016, Management Plan, which takes precedence over the summaries given here.

ABBREVIATIONS, ACRONYMS, AND DEFINITIONS

10 CFR PART 830.120 - Code of Federal Regulation "Quality Assurance"

Accuracy - The closeness of a measured value to the accepted true value.

ad hoc - For a specific case, situation, or purpose.

Administrative Controls - Provisions relating to organization and management procedures, record keeping, assessment, and reporting necessary to ensure safe operation of a facility. (10 CFR 830)

Amended Consent Agreement - The modified Consent Agreement signed in September, 1991, which includes the renegotiation framework and schedules for developing, implementing, and monitoring appropriate response actions at the FEMP and to facilitate cooperation, exchange of information and participation of the U.S. EPA and the U.S. DOE in such actions.

ANSI - American National Standards Institute

APPRAISAL - A documented objective and independent evaluation of ES&H activities within a functional area done according to written guidance and criteria to verify that applicable elements of the performing organization's program are significant, are adhered to, and add value to the overall process according to specific departmental requirements and needs. Other criteria affecting the evaluation of an appraised activity include the adequacy, implementation, and efficiency of the activity.

Appraisals differ from audits in that they are limited to ES&H activities and the documented evaluation addresses additional topics to verify that applicable elements of the performing organization's program are significant and add value to the overall process according to specific departmental requirements and needs and also the efficiency of the activity.

ASME - American Society of Mechanical Engineers

ASNT - American Society for Nondestructive Testing

ABBREVIATIONS, ACRONYMS, AND DEFINITIONS (continued)

Assessment/Verification - The act of reviewing, inspecting, testing, checking, conducting surveillances, auditing, or otherwise determining and documenting whether items, processes, or services meet specified requirements. The terms assessment and verification are synonymous; their use is determined by who is performing the work. Assessments are performed by or for senior management. Verifications are performed by the line organization.

Audit - A planned and documented activity systematically performed to determine by investigation, examination, or evaluation of objective evidence the quality of operation of some function or activity. Audits may be of two basic types: (1) performance audits in which quantitative data are independently obtained for comparison with routinely obtained data in a measurement system, or (2) system audits of a qualitative nature that consists of an on-site review of the quality assurance system and physical facilities for sampling, calibration, and measurement.

External Audit (Audit by an Outside Organization) - A formal examination (of FEMP activities) planned and conducted by an organization other than the FEMP, such as DOE. This includes their Technical Safety Appraisals (TSA), Management Appraisals, and Functional Appraisals.

Internal Audit - The Internal Audit organization provides an independent audit function at the Fernald Environmental Management Project (FEMP). Internal Audit is responsible for serving FERMCO and DOE management through periodic examination and evaluation of various activities at FEMP, including the adequacy and effectiveness of internal control systems; the quality and efficiency of performance; the allowability of costs; and compliance with DOE directives, regulations, and guidelines. Internal Audit's function is to perform timely, quality audits that examine the financial and operational nature of FERMCO activities.

Internal Independent Audit - A formal examination and evaluation of a FERMCO organization's activities by the FERMCO QA Organization to determine the status and assess the adequacy and effectiveness of the implementation of FERMCO procedures and compliance to requirements.

Supplier Audit - An audit of the QA Program activities of suppliers of materials and services to the FEMP. Included within this definition are the contractor(s) performing remediation and/or restoration services and the contractor(s) performing architect/engineer services.

ABBREVIATIONS, ACRONYMS, AND DEFINITIONS (continued)

CFR - Code of Federal Regulations

Chain-of-Custody Procedure - A procedural sequence of events which tracks sample custody or possession. A sample is considered in custody if it is in an authorized person's possession; locked so that no one can tamper with it; after having been in physical custody; and/or in a secured area, restricted to authorized personnel.

Charter - A document approved by the FERMCO President defining the work scope and responsibilities of a particular department or committee.

Comparability - A measure which expresses the confidence with which one data set can be compared to another. Comparability for a program is achieved by ensuring that all sampling and analysis use specified uniform procedures.

Completeness - A measure of the amount of valid data obtained from a measurement system compared to the amount that was expected to be obtained under normal conditions.

Compliance - Adherence to mandatory regulatory orders and directives.

Compliance Activity - A specific activity identified during the review of the QA Rule and Safety Guide which is required to implement a particular section or requirement of the QA Rule.

Comprehensive Environmental Response, Compensation and Liability Act (CERCLA) - An act enabling the EPA to investigate and cleanup abandoned or uncontrolled hazardous waste sites.

Computer Program - A sequence of instructions suitable for processing by a computer. Processing may include the use of an assembler, a compiler, an interpreter, or a translator to prepare the program for execution as well as to execute it. Computer programs impacted by the FERMCO QA Program Description are those used for design analysis, process or operations control, or data base or document control registers when used as the controlled source of quality information.

ABBREVIATIONS, ACRONYMS, AND DEFINITIONS (continued)

Condition Adverse to Quality - An all-inclusive term used in reference to any of the following failures, malfunctions, deficiencies, defective items, and nonconformance. A significant condition adverse to quality is one which, if uncorrected, could have a serious effect on safety or operability. (NQA-1)

Consent Agreement (CA) - The Consent Agreement is an agreement between the U.S. EPA and DOE: (1) To ensure the environmental impacts associated with the past and present activities at FEMP are thoroughly investigated and appropriate response actions(s) taken are necessary to protect the public health, welfare, and the environment. (2) To establish a procedural framework and schedule for developing, implementing, and monitoring appropriate response action at FEMP in accordance with CERCLA, the National Contingency Plan, and EPA Superfund guidance and policy; and (3) To facilitate cooperation, exchange of information and participation between the parties involved.

Contractor - Any person under contract with the Department of Energy with responsibility to perform activities in connection with a nuclear facility. (10 CFR 830)

Controlled Document - Any document for which distribution and status are to be kept current by the issuer in order to ensure that authorized holders or users of the document have available the most up-to-date version for accomplishment of work action.

Corrective Action - Measures taken to rectify significant conditions adverse to quality and, where necessary, to preclude repetition. (NQA-1)

Data Quality - The totality of features and characteristics of data that bears on the data's ability to satisfy a stated purpose. The characteristics of major importance are accuracy, precision, completeness, representativeness, comparability, traceability, and authenticity.

Deviation - A departure from specified requirements. (NQA-1)

Document - Any written or pictorial information describing, defining, specifying, reporting, or certifying activities, requirements, procedures, or results. A document is not considered to be a Quality Assurance Record until it satisfies the definition of a Quality Assurance Record as defined in this Appendix. (NQA-1)

ABBREVIATIONS, ACRONYMS, AND DEFINITIONS (continued)

DOE - U.S. Department of Energy

DOE 5400.1 - DOE Order entitled "General Environmental Protection Program"

DOE 5700.6C - DOE Order entitled "Quality Assurance"

Environmental Compliance - Adherence to those requirements established by DOE Orders and Federal and State Regulatory Agencies that address environmental protection of the FEMP and environs.

Environmentally Related Measurements - A term used to describe essentially all field and laboratory measurement of chemical, physical, or biological parameters in the environment; determining the presence or absence of priority pollutants in waste streams; health and ecological effect studies; clinical and epidemiological investigations; engineering and process evaluations; studies involving laboratory simulation of environmental events; and studies or measurements of pollutant transport, including diffusion models.

EPA - U.S. Environmental Protection Agency

FEMP - Fernald Environmental Management Project

FERMCO - Fernald Environmental Restoration Management Corporation

FMPC - Feed Materials Production Center (now the FEMP)

Graded Approach - a process by which the level of analysis, documentation, and actions necessary to comply with a requirement in this part are commensurate with:

(1) The relative importance to safety, safeguards, and security;
(2) The magnitude of any hazard involved;
(3) The life cycle stage of a facility;
(4) The programmatic mission of a facility;
(5) The particular characteristics of a facility; and
(6) Any other relevant factor. (10 CFR 830)

ABBREVIATIONS, ACRONYMS, AND DEFINITIONS (continued)

Hazard - A source of danger (i.e., material, energy source, or operation) with the potential to cause illness, injury, or death to personnel or damage to a facility or to the environment (without regard for the likelihood or credibility of accident scenarios or consequence mitigation). (10 CFR 830)

Implementation Plan - A document prepared by a contractor that sets forth:

(1) When and how the actions appropriate to comply with the requirements of a section of 10 CFR Part 830, including the requirements of a plan or program required by the section, shall be taken, and

(2) What relief will be sought if a contractor cannot attain full compliance with a requirement in a reasonable manner. (10 CFR 830)

Industrial Facility - A facility in which the hazards are limited to Standard Industrial Hazards.

Inspection - Examination or measurement to verify whether an item or activity conforms to specified requirements. (NQA-1)

Item - An all-inclusive term used in place of any of the following: appurtenance, facility, sample, assembly, component, equipment, material, module, part, structure, subassembly, subsystem, system, unit, or support systems.

Measuring and Test Equipment (MT&E) - Devices or systems used to calibrate, measure, gage, test, or inspect in order to control or acquire data to verify conformance to specified requirements. (NQA-1)

Nonconformance - A deficiency on characteristic, documentation, or procedure that renders the quality of an item or activity unacceptable or indeterminate. (NQA-1)

Nonconforming Condition - An item or process which does not comply with specified requirement in one or more characteristics.

ABBREVIATIONS, ACRONYMS, AND DEFINITIONS (continued)

Non-Reactor Nuclear Facility - Those activities or operations that involve radioactive and/or fissionable materials in such form and quantity that a nuclear hazard potentially exists to the employees or the general public. Included are activities or operations that -

(1) Produce, process, or store radioactive liquid or solid waste, fissionable materials, or tritium;
(2) Conduct separations operations;
(3) Conduct irradiated materials inspection, fuel fabrication, decontamination, or recovery operations;
(4) Conduct fuel enrichment operations; or
(5) Perform environmental remediation or waste management activities involving radioactive materials.

Incidental use and generating of radioactive materials in a facility operation (e.g., check and calibration sources, use of radioactive sources in research and experimental and analytical laboratory activities, electron microscopes, and X-ray machines) would not ordinarily require the facility to be included in this definition. (10 CFR 830)

Nuclear facility - Reactor and nonreactor nuclear facilities. (10 CFR 830)

Ohio EPA - Ohio Environmental Protection Agency

Person - Any individual, corporation, partnership, firm, association, trust, estate, public or private institution, group, Government agency, any State or political subdivision of, or any political entity and any legal successor, representative, agent or agency of the foregoing: provided that person does not include the Department or the United States NRC. (10 CFR 830)

Precision - A measure of mutual agreement among individual measurements of the same property, usually under prescribed similar conditions. Precision is best expressed in terms of the standard deviation. Various measures of precision exist depending upon the "prescribed similar conditions". The precision of an analytical method is determined from the results of duplicate samples.

Preventive Maintenance - Maintenance performed for precautionary reasons to protect against malfunction or failure.

ABBREVIATIONS, ACRONYMS, AND DEFINITIONS (continued)

Procedure - A document that specifies or describes how an activity is to be performed.

Process - A series of actions that achieve an end or result. (10CFR 830)

Procurement Document - Purchase requisitions, purchase orders, drawings, contracts, specifications,a or instructions used to define requirements for purchase. (NQA-1)

Product - Any item (hardware, software, service, document) produced for a customer.

PSO - Program Secretarial Officer; a head of a DOE office with responsibility for one or more specific facilities.

QAMS - Quality Assurance Management Staff; an EPA organization

Quality - The condition achieved when an item, service, or process meets or exceeds the user's requirements and expectations. (10CFR 830)

Quality Assurance (QA) - All those actions that provide confidence that quality is achieved. (10 CFR 830)

Quality Assurance Program (QAP) - The overall program established by FERMCO to implement the quality assurance requirements imposed on the FEMP by its customers. The Program assigns responsibilities and authorities, defines policies and requirements, and provides for the performance and assessment of work. (10 CFR 830)

Quality Assurance Project Plan (QAPjP) - An orderly assembly of detailed and specific procedures by which an agency delineates how it produces quality data for a specific project or measurement method. A given agency would have only one quality assurance program plan, but would have a quality assurance plan for each of its projects or programs (group of projects using the same measurement methods; for example, a laboratory service group might develop a plan by analytical instrument since the service is provided to a number of projects).

ABBREVIATIONS, ACRONYMS, AND DEFINITIONS (continued)

Quality Assurance Record - A completed document that furnishes evidence of the quality of items and/or activities affecting quality. (NQA-1) Records verifying compliance with regulatory requirements are quality assurance records. THESE RECORDS ARE OFTEN GENERATED BY ORGANIZATIONS OTHER THAN THE QUALITY ASSURANCE ORGANIZATION.

QA Rule - Term used to describe the requirements in 10 CFR 830.120, "Quality Assurance Requirements."

Quality Control (QC) - The overall system of technical activities that measures and controls the quality of a process, item, or service so that it meets the stated needs of the user. (ANSI/ASQC-E4-19xx)

Quality Level - The level of analysis, documentation, and other actions necessary to implement the QA program requirements based on the Graded Approach. There are four Quality Levels established at the FEMP, QL-1, QL-2, QL-3 and QL-4. Quality Level 3 establishes the basic Quality Management System that implements the QA Program requirements of 10 CFR 830.120. QL-1 and QL-2 apply additional resources and vigor required to control the increasingly higher risk and/or hazards. Quality Level 4 represents the appropriate level of resources applied to the purchase of non-safety related items.

Record - A completed document or other media that provides objective evidence of an item, service, or process. (10 CFR 830)

Resource Conservation and Recovery Act (RCRA) - An act which enabled the EPA to issue regulations for a national hazardous waste management program. The regulations govern hazardous waste from the time it is created to the time of its disposal. Any waste that is transported off the site for treatment, storage, or disposal must be accompanied by a manifest that: (a) Identifies who generated the waste (2) Provides a full description of the contents and quantity of the waste, and (3) Designates the facility to which it must be shipped.

Representativeness - Expresses the degree to which data accurately and precisely represent a characteristic of a population, parameter variations at a sampling point, process condition, or an environmental condition. Data representativeness is a function of sampling strategy; therefore, the sampling scheme should be designed to maximize representativeness.

ABBREVIATIONS, ACRONYMS, AND DEFINITIONS (continued)

Restoration - The environmental rejuvenation of the site and its surroundings to a former state or condition which (1) does not present a threat or hazard to the public health and welfare and the environment or (2) which effectively mitigates and minimizes the threat or hazard to the public health and welfare and the environment.

Risk - A quantitative or qualitative expression of possible loss in terms of consequence severity and probability of occurrence.

Service - The performance of work, such as design, construction, fabrication, inspection, nondestructive examination/testing, environmental qualification, equipment qualification, repair, installation, or the like. (10 CFR 830)

Sitewide CERCLA Quality Assurance Project Plan (SCQ) - This document, as approved by DOE and EPA, provides overall sitewide quality assurance planning for environmental sampling and analysis at the FEMP.

Standard Operating Procedure (SOP) - An operation, analysis, or action whose mechanics are thoroughly prescribed and documented and which is commonly accepted as the usual or normal method for performing certain routine or repetitive tasks.

Supplier - Any individual or organization who furnishes items or services in accordance with a procurement document. An all-inclusive term used in place of any of the following: vendor, seller, contractor, subcontractor, fabricator, consultant, and their subtier levels. (NQA-1)

Surveillance - The act of monitoring or observing to verify whether an item or activity conforms to be specified requirements.

Validation - The process of evaluating a product at the end of the entire development process to ensure compliance with requirements, or the measurement of effectiveness regarding corrective actions.

Work - Process of performing a defined task or activity; for example, research and development, operations, maintenance and repair, administration, software development and use, inspection, safeguards and security, data collection, and analysis.

GRADED APPROACH FOR QUALITY LEVELS

1.0 GRADED APPROACH

The QA Rule is applicable to the entire FEMP site through the use of a Graded Approach. The requirements of 10 CFR 830.120 will be graded and used for all site programs, including those which have little or no nuclear safety significance.

In order to ensure the most efficient use of resources, a graded approach is used to determine the rigor with which the QA management system is applied to a specific facility or activity. This approach provides the flexibility to implement the program in a way that best suits the facility or activity while maintaining full compliance with the QA rule.

A graded approach is the process by which the levels of analysis, documentation, and other actions necessary to implement the QA program requirements are based on facility/activity specific factors.

The scope and depth of the management system's application of requirements to a specific activity should be determined by the use of a grading process. The grading process provides the flexibility to design controls that best suit the facility or activity. The graded approach process should determine the appropriate level of effort necessary to attain and document the requirements established through the consideration of prescribed factors. This process is based on prescribed facility-specific or activity-specific factors such as the:

- level of risk;
- age, status, and condition of a facility or process;
- history of problems at a site or facility;
- adequacy of existing safety documentation; and
- complexity of products or services involved.

The graded approach and the establishment of Quality Levels are used to determine the appropriate level of effort necessary to implement the requirements of 10 CFR 830.120 and are not used to obtain relief from the requirements.

GRADED APPROACH FOR QUALITY LEVELS (continued)

Quality Levels have been established based on categorization rules which are applicable at two levels: 1) entire Facilities/Activities and 2) Structures, Systems or Components (SSC) in the facility or used in the activity. This process is documented in Attachment D1, "Categorization Criteria for Facilities/Activities and Systems, Structures, and Components" which was used to develop the Quality Level Matrix shown in Tables 1 2, and 3.

Since Quality Level 3 is the basic Quality Management System that implements the QA Program requirements of 10 CFR Part 830.120, all support organizations and functional areas will operate under a Quality Level 3 program. If these organizations are involved in a specific activity or task which is deemed to be at a higher Quality Level (1 or 2), then they will apply the appropriate resources required by that Quality Level.

Quality Level 4 is not intended to implement all of the QA program requirements for site facilities or activities. At this level, an adequate amount of resources are applied as defined in project specific plans or purchase orders.

The Quality Assurance Program (*QAP*) includes specific requirements associated with the four Quality Levels. These requirements are documented in the "Application of Quality Levels to QA Program Criteria" chart, Attachment D2. Appropriate QA elements will be applied to each Facility/Activity and Structures, Systems, or Components (SSC) in accordance with the Quality Level established in the following Tables (1,2,3) and the requirements documented in Attachment D2. The activities and programs required by the *QAP* implement the provisions of the QA Rule. This information is documented further in Attachment D2 and in the following.

GRADED APPROACH FOR QUALITY LEVELS (continued)

TABLE 1

FACILITY/ACTIVITY	
NUCLEAR HAZARD CATEGORY	QUALITY LEVEL FOR WRITTEN PROGRAM
HAZARD CATEGORY 1 (HC1)	QL-1
HAZARD CATEGORY 2 (HC2)	QL-2*
HAZARD CATEGORY 3 (HC3)	QL-3*
RADIOLOGICAL FACILITY (RF)	QL-4*

* SPECIAL PROJECTS AND FACILITIES MAY HAVE THEIR QUALITY LEVEL UPGRADED BASED ON A FORMAL PROCESS ESTABLISHED IN SITE PROCEDURES.

TABLE 2

FACILITY/ACTIVITY	
NON-NUCLEAR HAZARD CATEGORY	QUALITY LEVEL FOR WRITTEN PROGRAM
HIGH HAZARD CLASS (HH)	QL-1
MODERATE HAZARD CLASS (MH)	QL-2*
LOW HAZARD CLASS (LH)	QL-3*
INDUSTRIAL FACILITY (IF)	QL-4*

* SPECIAL PROJECTS AND FACILITIES MAY HAVE THEIR QUALITY LEVEL UPGRADED BASED ON A FORMAL PROCESS ESTABLISHED IN SITE PROCEDURES.

GRADED APPROACH FOR QUALITY LEVELS (continued)

TABLE 3

SYSTEMS, STRUCTURES, AND COMPONENTS	
PERFORMANCE GRADE CATEGORY	QUALITY LEVEL FOR SSC
PG-1	QL-1
PG-2	QL-2*
PG-3	QL-3*
PG-4	QL-4*
PG-5	QL-4*

* DURING THE PERFORMANCE GRADING PROCESS, THE TECHNICAL REVIEW TEAM MAY ESTABLISH A HIGHER QUALITY LEVEL BASED ON SPECIAL CONSIDERATIONS.

2.0 QUALITY LEVELS

The "Application of Quality Levels to QA Program Criteria" matrix charts, Attachment D2, provides both prescriptive guidance and broadbased requirements for assignment of the appropriate resources necessary to implement a Quality Assurance program based on the risk, hazard, safety and cost significance of a particular facility, activity, system, structure, or component (as defined by Hazard Categories, safety systems, and Quality Levels.)

These matrix charts are provided for reference purposes and should be used by functional area, program, or project managers to develop their documented program and procedures in accordance with the safety significance of their work. They should also be used to develop subcontractor requirements, procurement specifications and design requirements for all products or services purchased by FERMCO. In addition, the matrix charts serve as a tool for assessors of these programs to ensure that appropriate resources have been applied to the QA management system developed for that work, whether the work is performed by FERMCO or a subcontractor.

GRADED APPROACH FOR QUALITY LEVELS (continued)

Quality Level - the level of analysis, documentation, and other actions necessary to implement the QA program requirements based on the Graded Approach. There are four Quality Levels established at the FEMP, QL-1, QL-2, QL-3 and QL-4.

Quality Level 3 establishes the basic Quality Management System that implements the QA Program requirements of 10 CFR 830.120.

QL-1 and QL-2 apply additional resources and vigor required to control the increasingly higher risk and/or hazards.

Quality Level 4 represents the appropriate level of resources applied to non-safety related services or to the purchase of non-safety related items. These definitions are expanded below:

- Quality Level 1 (QL-1) - This Quality Level includes the basic Quality Management System of QL-2 plus the additional resources and vigor necessary for control and protection due to the highest risks and/or hazards at the site.

  Quality Level 1 is generally applied to facilities/activities which are categorized as Hazard Category 1 or High Hazard Class as described in Table 1 or Table 2 and Attachment D2.

  Quality Level 1 is also generally applied to Systems, Structures, and Components which are categorized as Performance Grade 1 as described in Table 3, and Attachment D2.

- Quality Level 2 (QL-2) - This Quality Level includes the basic Quality Management System of QL-3 plus the additional resources and vigor necessary for control and protection due to the higher risks and/or hazards.

  Quality Level 2 is generally applied to facilities/activities which are categorized as Hazard Category 2 or Moderate Hazard Class as described in Table 1 or Table 2 and Attachment D2.

  Quality Level 2 is also generally applied to Systems, Structures, and Components which are categorized as Performance Grade 2 as described in Table 3 and Attachment D2.

GRADED APPROACH FOR QUALITY LEVELS (continued)

- Quality Level 3 (QL-3) - This is the basic Quality Management System that implements the QA Program requirements (10 criteria) of 10 CFR 830.120.

  Quality Level 3 is generally applied to facilities/activities which are categorized as Hazard Category 3 or Low Hazard Class as described in Table 1 or Table 2 and Attachment D2.

  Quality Level 3 is also generally applied to Systems, Structures, and Components which are categorized as Performance Grade 3 as described in Table 3 and Attachment D2.

- Quality Level 4 (QL-4) - This Quality Level is not intended to implement all of the QA program requirements for site facilities or activities. At this level, an adequate amount of resources are applied as defined in project specific plans or purchase orders.

  Applicable technical and administrative requirements (such as specifications, codes, standards, tests and inspections, and acceptance criteria) for procurement of items and services shall be clearly stated in the procurement documents.

  Quality Level 4 is generally applied to facilities or activities which are categorized as a Radiological Facility or an Industrial Facility as described in Table 1 or Table 2 and Attachment D2.

  Quality Level 4 is also generally applied to Systems, Structures, and Components which are categorized as Performance Grade 4 or 5 as described in Table 3 and Attachment D2.

GRADED APPROACH FOR QUALITY LEVELS (continued)

3.0 PROCUREMENT OF ITEMS/SERVICES FOR SUBCONTRACTORS/SUPPLIERS

The *QAP* establishes the QA requirements for FERMCO and all other contractor and subcontractor organizations performing work at the FEMP. The *QAP* identifies and describes the integral elements of the QA activities that apply to the broad spectrum of work performed by FERMCO and its contractors and subcontractors for all activities associated with the FEMP. Major work activities associated with the FEMP are: remedial investigation/feasibility study, removal site evaluations, removal actions, remedial design, remedial actions, Resource Conservation and Recovery Act (RCRA) activities, construction, waste management, safe shutdown, program management and support activities, and landlord activities.

Applicable technical and administrative requirements (such as specifications, codes, standards, tests and inspections, and acceptance criteria) for procurement of items and services shall be clearly stated in the procurement documents.

These prospective suppliers are to be evaluated to ensure that only qualified suppliers are selected that meet the requirements of the *QAP* and/or the Quality Levels. The prospective suppliers shall be evaluated to verify their capabilities to meet performance and schedule requirements. Measures for evaluating and selecting suppliers may include:

- a review of the supplier's history for providing identical or similar items or services;
- an assessment of the supplier's capability based on evaluation of its facilities, personnel, and programs; or
- an evaluation of documented qualitative and quantitative information provided by the supplier.

GRADED APPROACH FOR QUALITY LEVELS (continued)

3.1 OVERALL METHOD OF APPLYING QUALITY ASSURANCE REQUIREMENTS

The Purchaser may incorporate into the procurement documents a complete quality assurance program standard, such as the *QAP*, and require the Supplier to apply the requirements of the *QAP* as appropriate to the items and services being procured. Items and services (this includes items and services from subcontractors and suppliers) must meet established requirements and perform as expected.

It is left to the contractor to determine the methods for ensuring that procured items and services meet requirements and perform as expected. The procurement documents should clearly state test/inspection requirements and acceptance criteria for purchased items and services. Procurement document should include any specifications, standards, and other documents referred to by the design documents. Critical parameters and requirements such as submittals, product related documentation, nonconformance requirements, administrative documentation, personnel or materials qualification, tests, inspections, and reviews should be specified as line items.

At Quality Levels (1-3), an adequate amount of resources are applied to implementation of the QA requirements, as defined in project specific plans or purchase orders. These resources shall include the following as applicable or others that are deemed necessary to ensure that items and/or services provided by suppliers meet the requirements and expectations of the end-user: source verification, receipt inspection, pre-installation and post-installation tests, design, inspection and acceptance testing or a combination of these or other methods).

Quality Level 4 is not intended to implement all of the QA program requirements for site facilities/activities. At this level, an adequate amount of resources are applied to implementation of the QA requirements, as defined in project specific plans or purchase orders. These resources may include the following: source verification, receipt inspection, pre-installation and post-installation tests, design, inspection and acceptance testing or a combination of these or other methods.

GRADED APPROACH FOR QUALITY LEVELS (continued)

3.2 UNIQUE METHOD OF APPLYING QUALITY ASSURANCE REQUIREMENTS

a) COMMERCIAL GRADE ITEMS

FERMCO shall establish and implement appropriate controls (Quality Level 4) for services and items for the selection, determination of suitability, evaluation, and also for the receipt of commercial-grade items to ensure that commercial-grade items perform as expected.

Quality Level 4 is not intended to implement the QA program requirements for site facilities/activities. At this level, an adequate amount of resources are applied to the implementation of the QA requirements, as defined in project specific plans or purchase orders. These resources may include the following: source verification, receipt inspection, pre-installation and post-installation tests, design, inspection and acceptance testing or a combination of these or other methods).

b) SOLE/UNIQUE SOURCE

The purchaser may incorporate into the procurement documents selected portions of a quality assurance standard, such as the *QAP*, that are unique to the items or services being procured. For example, when the Purchaser's order is limited to design work only, the following could be applicable:

CRITERION 1 - PROGRAM
CRITERION 3 - QUALITY IMPROVEMENT
CRITERION 4 - DOCUMENTS AND RECORDS
CRITERION 5 - WORK PERFORMANCE
CRITERION 6 - DESIGN
CRITERION 10 - INDEPENDENT ASSESSMENT

GRADED APPROACH FOR QUALITY LEVELS (continued)

At Quality Levels (1-3), an adequate amount of resources are applied to implementation of the QA requirements, as defined in project specific plans or purchase orders. These resources shall include the following as applicable or others that are deemed necessary to ensure that items and/or services provided by suppliers meet the requirements and expectations of the end-user: source verification, receipt inspection, pre-installation and post-installation tests, design, inspection and acceptance testing or a combination of these or other methods).

c) MINORITY CONTRACTS/SMALL DISADVANTAGED BUSINESSES

Quality Levels (1-4) are applicable to Minority Contracts and Small Disadvantaged Businesses. Quality Level 3 is the basic Quality Management System that implements the QA Program requirements (10 criteria) of 10 CFR 830.120 and is applicable to these firms. Procurement and contracts for items and services to these firms shall request the firms to establish and implement a program to ensure that the purchased items and services meet established requirements and perform as expected.

For those firms that do not have a QA Program that meets the *QAP* and the Quality Level requirements or do not have the resources to develop them, these firms shall be evaluated for programs in place and/or for those that can be developed to comply. FERMCO may furnish program services to augment those of the MINORITY CONTRACTS AND SMALL DISADVANTAGED BUSINESSES to meet the requirements of the *QAP* such as the following: source verification, receipt inspection, pre-installation and post-installation tests, design, inspection and acceptance testing or a combination of these or other methods).

CATEGORIZATION CRITERIA FOR FACILITIES/ACTIVITIES AND SYSTEMS, STRUCTURES, AND COMPONENTS*

1.0 INTRODUCTION

The details of the application of various safety and other program requirements such as safety analysis, readiness reviews, configuration management, quality assurance, and conduct of operations to project planning, design and operation should follow a so called "Graded Approach". The purpose of the graded approach is to relate the extent of the application of the program and therefore the associated effort to that which would have an added value in terms of improved safety or level of assurance for the successful conduct of an activity.

There is a need for establishing categories of facilities, activities, structures, systems, and components so that rules or requirements for the application of any particular program can be established and applied uniformly. The categorization rules must be applicable at two levels: entire Facilities or Activities and the Systems, Structures, and Components (SSC) that make up the Facility or are used in the Activity. A Facility or Activity category is utilized for grading the application of such things as safety analysis, design controls and readiness reviews while a SSC category is used for such things as configuration management and quality control. For some functional areas both levels of categorization might be needed. For example, there is a need to define quality assurance requirements at an overall project level as well as at a detailed SSC level.

Since the major application of the graded approach is in the area of safety, the basic categorization is built along safety impacts. Facility or Activity categories are adequately defined by hazard category defined in DOE 5480.23 (Safety Analysis Reports), DOE 5481.1B (Safety Analysis and Review System), and DOE-STD-1027-92 (*Guidance on Preliminary Hazard Classification and Accident Analysis Techniques for Compliance with DOE Order 5480.23 "Safety Analysis Reports"*), with the addition of further guidance for below category 3 and standard industrial hazard.

*NOTE: This attachment (D1 - Categorization Criteria for Facilities/Activities and Systems, Structures, and Components) is provided for summary or clarification purposes. The specific requirements and processes used to categorize Facilities/Activities and Systems, Structures, and Components and are detailed in the procedures used by Nuclear Systems Departments and the Engineering Division. These procedures take precedence over the summary provided here.

CATEGORIZATION CRITERIA FOR FACILITIES/ACTIVITIES AND SYSTEMS, STRUCTURES, AND COMPONENTS (continued)*

While categorization for SSC can parallel and overlap the hazard categories additional detail is needed to allow for the fact that every SSC in a facility is not as important as every other. While it is obvious that individual SSC may have lower importance to safety than implied from the overall hazard category, it is less obvious, but true, that certain SSC may need tighter controls then is obvious from the hazard category alone.

2.0 FACILITY/ACTIVITY HAZARD CATEGORIES OR HAZARD CLASSES

The Nuclear Safety Department of the Environmental Safety & Health (ES&H) Division shall determine the Hazard Category for Facilities/Activities at the FEMP in accordance with DOE Order 5480.23, *Nuclear Safety Analysis Reports*. The safety analysis documentation provides the rationale for determining the hazard category for that Facility/Activity.

Facility, as used here, is intended to be all inclusive and to include activities and projects, as well as physical facilities. A project may include several activities which may take place in several buildings (or facilities). The boundaries to be utilized in the hazard categories depends on the nature of the activities (intended for a common specific purpose) and their physical proximity. Totally unrelated activities in close proximity may need to be considered together if one could effect the other.

2.1 For "Nuclear Facilities" or a facility which has a radiological inventory above a specified threshold (40 CFR 302.4 Appendix B) or otherwise imposes a radiological hazard that must be controlled:

(a) Hazard Category 1: A facility in which an unmitigated accident could have a significant offsite impact.

(b) Hazard Category 2: A facility in which an unmitigated accident could have a significant onsite impact.

*NOTE: This attachment (D1 - Categorization Criteria for Facilities/Activities and Systems, Structures, and Components) is provided for summary or clarification purposes. The specific requirements and processes used to categorize Facilities/Activities and Systems, Structures, and Components and are detailed in the procedures used by Nuclear Systems Departments and the Engineering Division. These procedures take precedence over the summary provided here.

CATEGORIZATION CRITERIA FOR FACILITIES/ACTIVITIES AND SYSTEMS, STRUCTURES, AND COMPONENTS (continued)*

(c) Hazard Category 3: A facility in which the unmitigated consequences of an accident are only locally significant.

(d) Radiological Facility: A facility that does not meet or exceed the Hazard Class 3 threshold quantity values (DOE-STD-1027-92) but contain some quantity of radioactive material > Appendix B 40 CFR 302, *Protection of Environment*.

A Standard Industrial Hazard is a hazard of a type and nature that are routinely encountered in industry and are addressed by the implementation of consensus standards or OSHA or similar safety and health programs.

Note that facilities below Hazard Category 3 are classified as Radiological Facilities in DOE-STD-1027-92 and the requirements for Safety Analysis Reports for "Nuclear Facilities" are not applicable. The applicability of other "Nuclear Safety" orders must be made on a case by case basis.

2.2 For a "Non-nuclear Facility", or a facility which is not a nuclear facility but does contain hazardous material in excess of that specified in 40 CFR 302.4,

(a) High Hazard Class: A facility where the hazards have the potential for onsite or offsite impacts to large numbers of persons or for major impacts to the environment.

(b) Moderate Hazard Class: A facility whose hazard presents considerable potential for onsite impacts to people or the environment but, at most, only minor offsite impacts.

(c) Low Hazard Class: A facility whose hazard presents minor onsite and negligible offsite impacts to people or the environment.

*NOTE: This attachment (D1 - Categorization Criteria for Facilities/Activities and Systems, Structures, and Components) is provided for summary or clarification purposes. The specific requirements and processes used to categorize Facilities/Activities and Systems, Structures, and Components and are detailed in the procedures used by Nuclear Systems Departments and the Engineering Division. These procedures take precedence over the summary provided here.

CATEGORIZATION CRITERIA FOR FACILITIES/ACTIVITIES AND SYSTEMS, STRUCTURES, AND COMPONENTS (continued)*

2.3 An Industrial Facility is a facility in which the hazards are limited to Standard Industrial Hazards.

3.0 SYSTEMS, STRUCTURES, AND COMPONENTS (SSC) PERFORMANCE GRADE CATEGORIZATION

The Engineering Division has overall responsibility for assigning Performance Grade (PC) Categories to SSCs, based on:

- nuclear and non-nuclear safety significance;
- project importance relative to the FERMCO Mission;
- design life of the SSC; and
- project complexity.

The Performance Grade categories are summarized in the flow-chart in Figure 1 and described in the following paragraphs category-by-category.

The categorizations presented here assume that the hazard categorization/classification, accident analysis, and identification of "safety" systems for facilities that store, handle or process radioactive and toxic materials have been performed and documented in accordance with applicable DOE orders and standards.

(a) Performance Grade 1: An SSC shall be placed in Performance Grade 1 (PG-1) if it is part of a "safety" system in a Hazard Category 1 (HC1) or a High Hazard (HH) Facility.

An SSC that does not satisfy the above criteria may also be placed in PG-1 for improved performance if justified from cost-benefit considerations.

*NOTE: This attachment (D1 - Categorization Criteria for Facilities/Activities and Systems, Structures, and Components) is provided for summary or clarification purposes. The specific requirements and processes used to categorize Facilities/Activities and Systems, Structures, and Components and are detailed in the procedures used by Nuclear Systems Departments and the Engineering Division. These procedures take precedence over the summary provided here.

CATEGORIZATION CRITERIA FOR FACILITIES/ACTIVITIES AND SYSTEMS, STRUCTURES, AND COMPONENTS (continued)*

(b) Performance Grade 2: An SSC shall be placed in Performance Grade 2 (PG-2) if it is part of a "safety" system in a Hazard Category 2 (HC2) or a Moderate Hazard (MH) Facility.

An SSC that does not satisfy the above criteria may also be placed in PG-2 for improved performance if justified from cost benefit considerations.

(c) Performance Grade 3: An SSC shall be placed in Performance Grade 3 (PG-3) if it is not covered in Paragraphs (a) and (b) above, and if any of the following conditions apply:

(1) The SSC is part of a "safety" system in a Hazard Category 3 (HC3), a Radiological Facility (RF) or a Low Hazard (LH) Facility.

(2) The SSCs failure by itself or in combination with one or more SSCs may result in loss of function of any emergency handling, hazard recovery, fire suppression, emergency preparedness, communication, or emergency power system that may be needed to preserve the health and safety of the facility workers, co-located workers, and visitors.

(3) A SSC whose failure fails a preventative or mitigative function necessary to insure that regulatory imposed release limits are not exceeded.

An SSC that does not satisfy the above criteria may also be placed in PG-3 from cost and mission considerations (e.g., when SSC failure causes excessive downtime, SSC is very difficult to replace, or SSC replacement/repair is very costly).

*NOTE: This attachment (D1 - Categorization Criteria for Facilities/Activities and Systems, Structures, and Components) is provided for summary or clarification purposes. The specific requirements and processes used to categorize Facilities/Activities and Systems, Structures, and Components and are detailed in the procedures used by Nuclear Systems Departments and the Engineering Division. These procedures take precedence over the summary provided here.

CATEGORIZATION CRITERIA FOR FACILITIES/ACTIVITIES AND SYSTEMS, STRUCTURES, AND COMPONENTS (continued)*

(d) Performance Grade 4: An SSC that is not covered in Paragraphs (a), (b), and (c) above shall be placed in Performance Grade 4 (PG-4) if any of the following conditions apply.

(1) The SSCs failure may cause a life threatening situation to facility workers or co-located workers.

(2) A SSC required to prevent or mitigate a standard industrial hazard.

(3) The monitoring systems to monitor compliance with regulatory imposed release limits.

(e) Performance Grade 5: An SSC that is not covered in Paragraphs (a) through (d) above may be placed in Performance Grade 5 (PG-5), if it is not important because of safety, mission, or cost considerations, except that, an SSC whose failure may have any adverse effect on the performance of a PG-1, PG-2, PG-3, or PG-4 SSC shall not be placed in PG-5.

4.0 ASSIGNMENT OF QUALITY LEVELS TO CATEGORIES

FERMCO establishes Quality Levels based on Hazard Categories for Facilities/Activities and on Performance Grade Categories for Systems, Structures, and Components. These Quality Levels determine the appropriate level of effort FERMCO will allocate in order to assure quality. The relationship between Quality Levels to Hazard Categories and Performance Grade Categories are shown in Tables 1, 2, and 3 of Appendix D.

*NOTE: This attachment (D1 - Categorization Criteria for Facilities/Activities and Systems, Structures, and Components) is provided for summary or clarification purposes. The specific requirements and processes used to categorize Facilities/Activities and Systems, Structures, and Components and are detailed in the procedures used by Nuclear Systems Departments and the Engineering Division. These procedures take precedence over the summary provided here.

FIGURE 1: Basic Guideline for Performance Grade Categorization of Structures, Systems, and Components

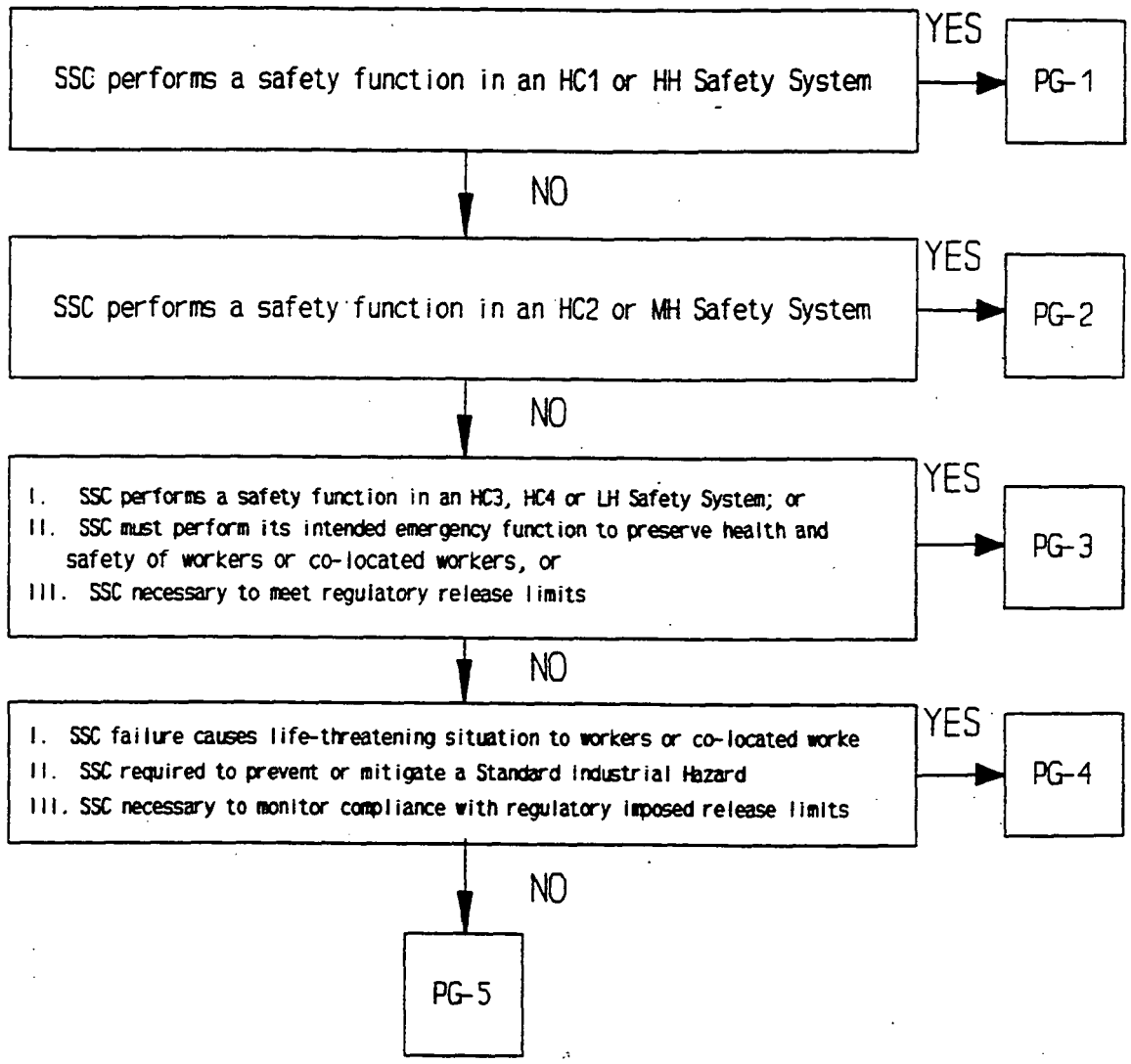

*NOTE: This attachment (D1 - Categorization Criteria for Facilities/Activities and Systems, Structures, and Components) is provided for summary or clarification purposes. The specific requirements and processes used to categorize Facilities/Activities and Systems, Structures, and Components and are detailed in the procedures used by Nuclear Systems Departments and the Engineering Division. These procedures take precedence over the summary provided here.

6989

APPLICATION OF QUALITY LEVELS TO QA PROGRAM CRITERIA

Greatest Level of Assigned Resources <——————————> Lowest Level of Assigned Resources

CRITERIA SYNOPSIS	QUALITY LEVEL 1	QUALITY LEVEL 2	QUALITY LEVEL 3	QUALITY LEVEL 4
0.0 Quality Level Definition and Applications	Definition: This Quality Level includes the basic Quality Management system of Quality Level-2 plus the additional resources and vigor necessary for control and protection due to the Highest Risks and/or Hazards.	Definition: This Quality Level includes the basic Quality Management system of Quality Level-3 plus the additional resources and vigor necessary for control and protection due to the Higher Risks and/or Hazards.	Definition: This is the basic Quality Management System that implements the QA Program requirements (10 Criteria) of 10 CFR 830.120. This Quality Level addresses the basic hazards and risks associated with DOE Nuclear/Hazardous facilities or activities that are part of a Safety System.	Definition: This Quality Level is not intended to implement the QA program requirements for site facilities/activities. At this level, an adequate amount of resources are applied to implementation of the QA requirements, as defined in the purchase order. Applicable technical and administrative requirements (such as specifications, codes, standards, tests and inspections, and acceptance criteria) for procurement of items and services shall be clearly stated in the procurement documents. This level is generally applied to: services or commercial-grade items which are not part of safety systems as described below and in the QAP, Tables 1,2,3, and Attachment D1.
	This Quality Level is generally applied to: • facilities/activities which are categorized as Hazard Category 1 or High Hazard Class or to • Systems, Structures, and Components which are categorized as Performance Grade 1. They are described below and in the QAP, Tables 1,2,3, and Attachment D1.	This Quality Level is generally applied to: • facilities/activities which are categorized as Hazard Category 2 or Moderate Hazard Class or to • Systems, Structures, and Components which are categorized as Performance Grade 2. They are described below and in the QAP, Tables 1,2,3, and Attachment D1.	This Quality Level is generally applied to: • facilities/activities which are categorized as Hazard Category 3 or Low Hazard Class or to • Systems, Structures, and Components which are categorized as Performance Grade 3. They are described below and in the QAP, Tables 1,2,3, and Attachment D1.	
	APPLICATION: Facility or Activity • Nuclear Hazard Category • HC1 • Non-Nuclear Hazard Category • HH	APPLICATION: Facility or Activity • Nuclear Hazard Category • HC2 • Non-Nuclear Hazard Category • MH	APPLICATION: Facility or Activity • Nuclear Hazard Category • HC3 • Non-Nuclear Hazard • LH	APPLICATION: Facility or Activity • Radiological Facility • RF • Non-Nuclear Hazard • IF
A brief synopsis of the criteria are listed below.	Systems, Structures, Components • Performance Grade Category • PG-1	Systems, Structures, Components • Performance Grade Category • PG-2	Systems, Structures, Components • Performance Grade Category • PG-3	Systems, Structures, Components • Performance Grade Category • PG-4 and PG-5

NOTE 1: Since Facilities/Activities differ in scope, safety significance, risk and general requirements, the Programs defined for each Quality Level and each Criteria are provided as both prescriptive guidance and broad-based requirements. Program managers are expected to develop their management systems based on this information and on other requirements unique to their process. In order to ensure consistency and compliance with the Implementation Plan., QA shall review and approve the QA management system.

NOTE 2: *Italicized criteria are areas which lend themselves to the best application of graded resources. Program managers or subcontractors developing QA management systems at the designated Quality Levels should concentrate on applying appropriate levels of resources to these areas based on the complexity, risk and safety factor associated with their process.*

APPLICATION OF QUALITY LEVELS TO QA PROGRAM REQUIREMENTS

PRIMARY AREA OF INCREASED RESOURCES FOR QUALITY LEVELS (1-3)

- DETAILED DOCUMENTATION
- TRAINING AND CERTIFICATION REQUIREMENTS
- FREQUENCY OF REVIEW, OVERSIGHT, AND ASSESSMENT

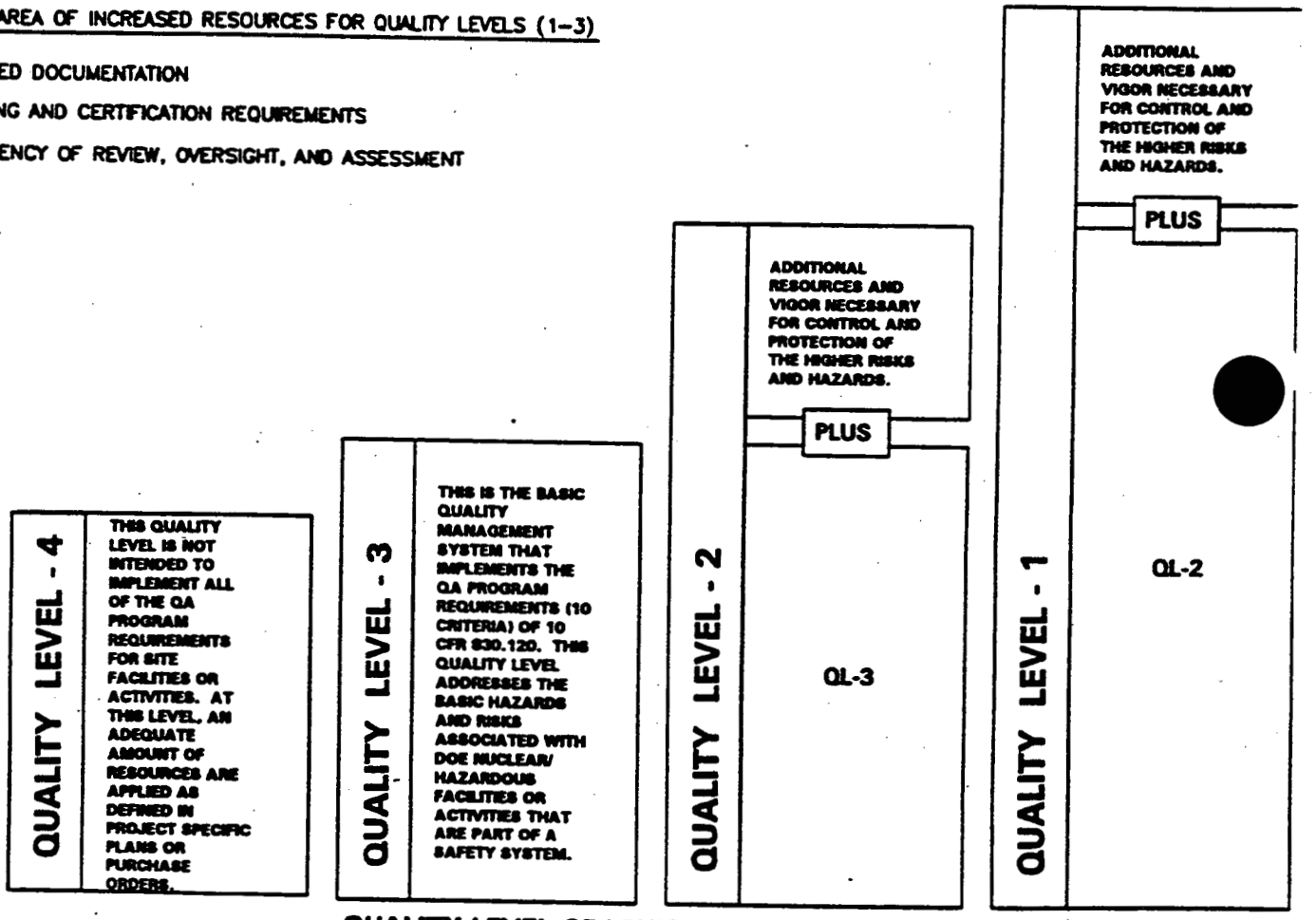

QUALITY LEVEL GRAPHICAL DESCRIPTION

APPLICATION OF QUALITY LEVELS TO QA PROGRAM CRITERIA

Greatest Level of Assigned Resources <——————————> Lowest Level of Assigned Resources

CRITERIA SYNOPSIS	QUALITY LEVEL 1	QUALITY LEVEL 2	QUALITY LEVEL 3	QUALITY LEVEL 4
1.0 Program • Develop, implement, and maintain a written QAP that describes: • Organizational structure • Functional responsibility • Levels of Authority • Interfaces for those managing, performing, and assessing adequacy of work • *Describe the management system including planning, scheduling, and cost control considerations* • Proper equipment, material, and resources available • Responsibility and authority to stop unsatisfactory work	A formal program that implements all of the elements of Criteria 1. Example: FERMCO shall have highly detailed descriptions of the organizational interfaces with emphasis on the interactions and responsibilities of individuals and how they impact each other and the project. Subcontractors/suppliers providing material or services shall have a documented QA program commensurate with the Quality Level assigned.	A structural program that implements the elements of Criteria 1. Example: FERMCO shall have descriptions of the organizational interfaces showing the responsibilities and interactions of individuals and how they impact the project. Subcontractors/suppliers providing material or services shall have a documented QA program commensurate with the Quality Level assigned.	A brief but complete description that implements the elements of Criteria 1. Example: FERMCO shall have a brief description of the individuals in the organization and how they work together, i.e., a functional chart. Subcontractors/suppliers providing material or services shall demonstrate compliance with QA requirements but need not have a documented QA program.	This Quality Level is not intended to implement the QA program requirements for site facilities/activities. At this level, an adequate amount of resources are applied as defined in project specific plans or purchase orders. Applicable technical and administrative requirements (such as specifications, codes, standards, tests and inspections, and acceptance criteria) for procurement of items and services shall be clearly stated in the procurement documents. This level is generally applied to: services or commercial-grade items which are not part of safety systems as described in the QAP, Appendix D.
2.0 Personal Training and Qualification • *Personal Training* • *Training plans* • *Classroom training* • *Required reading* • Qualifications requirements • Written tests • Demonstrated proficiency • *Certification* • *Key personnel certified per appropriate standards*	A formal program that implements all of the elements of Criteria 2. Example: FERMCO, subcontractors, and suppliers shall have documented detailed description of Qualification and Certification requirements, including: education, experience, training, written tests, and documented demonstrated proficiency.	A structural program that implements the elements of Criteria 2. Example: FERMCO, subcontractors, and suppliers shall have a documented description of Qualification and Certification (if required) requirements, including: education, experience, training, written tests, and documented demonstrated proficiency.	A brief but complete description that implements the elements of Criteria 2. Example: FERMCO, subcontractors, and suppliers shall have a documented brief description of Qualification and Certification (if required) requirements, including: experience, training, written tests (if required), and documented demonstrated proficiency.	At this level, an adequate amount of resources are applied as defined in project specific plans or purchase orders. Applicable technical and administrative requirements (such as specifications, codes, standards, tests and inspections, and acceptance criteria) for procurement of items and services shall be clearly stated in the procurement documents. This level is generally applied to: services or commercial-grade items which are not part of safety systems as described in the QAP, Appendix D.

APPLICATION OF QUALITY LEVELS TO QA PROGRAM CRITERIA

Greatest Level of Assigned Resources <——————————> Lowest Level of Assigned Resources

CRITERIA SYNOPSIS	QUALITY LEVEL 1	QUALITY LEVEL 2	QUALITY LEVEL 3	QUALITY LEVEL 4

3.0 Quality Improvement
• Corrective action program
  • Deviations - Items and processes identified, controlled, and corrected
  • Correction - identifying the causes of problems and preventing recurrence
 	
• *Trend Analysis*
  • *Review item reliability, process implementation, and other quality related information*
  • *Data analyzed to identify items and processes needing improvement*
	A formal program that implements all of the elements of Criteria 3.
	
	Example: FERMCO, suppliers and subcontractors shall conduct in depth investigation of non-conforming items and processes to identify the root cause and prevent recurrence.
	
	Example: FERMCO, suppliers and subcontractors shall conduct in depth, quarterly reviews and analysis of deficiencies and other quality information for trends that may identify items and processes needing improvement.
	
	Example: Subcontractor's/ supplier's Quality Improvement system shall be compatible with FERMCO's.
		A structural program that implements the elements of Criteria 3.
		
		Example: FERMCO, suppliers and subcontractors shall complete investigation of non-conforming items and processes to identify the root cause and prevent recurrence.
		
		Example: FERMCO, suppliers and subcontractors shall conduct semi-annual reviews and analysis of deficiencies and other quality information for trends that may identify items and processes needing improvement.
		
		Example: Subcontractor's/ supplier's Quality Improvement system shall be compatible with FERMCO's.
			A brief but complete description that implements the elements of Criteria 3.
			
			Example: FERMCO, suppliers and subcontractors shall complete investigation of non-conforming items and processes to identify the root cause and prevent recurrence.
			
			Example: FERMCO, suppliers and subcontractors shall maintain an awareness and sensitivity to trends of deficiencies and other quality information that may identify items and processes needing improvement.
			
			Example: Subcontractor's/ suppliers Quality Improvement system can be independent of FERMCO's, but must be auditable by FERMCO.
				At this level, an adequate amount of resources are applied as defined in project specific plans or purchase orders.
				
				Applicable technical and administrative requirements (such as specifications, codes, standards, tests and inspections, and acceptance criteria) for procurement of items and services shall be clearly stated in the procurement documents.
				
				This level is generally applied to: services or commercial-grade items which are not part of safety systems as described in the QAP, Appendix D.

4.0 Documents & Records • *Documents - System to control preparation, review, approval, issuance, use, and revision to documents that establish policies, prescribe work, specify requirements, or establish design* • *Records - Process to ensure that records are specified, prepared, reviewed, approved, and maintained to accurately reflect completed work* • *Maintenance of records - System to include provisions for retention, protection, preservation, traceability, accountability, and retrievability*	A formal program that implements all the elements of Criteria 4. Example: FERMCO, suppliers and subcontractors shall document process activities and the completion of each process step. These records shall be reviewed and approved by management at the completion of each shift. Example: FERMCO, suppliers and subcontractors shall maintain protection and preservation facilities, such as; fireproof cabinets or duplicate records stored at separate locations.	A structural program that implements the elements of Criteria 4. Example: FERMCO, suppliers and subcontractors shall document designated process activities and the completion of designated process steps. These records shall be reviewed and approved by management at least weekly. Example: FERMCO, suppliers and subcontractors shall maintain protection and preservation facilities, such as; fireproof cabinets or duplicate records stored at separate locations.	A brief but complete description that implements the elements of Criteria 4. Example: FERMCO, suppliers and subcontractors shall document designated process activities and the completion of designated process steps. These records shall be reviewed by management. Example: FERMCO, subcontractors, and suppliers shall maintain controlled access for documents and records, this need not be in fire-proof cabinets or in duplicate at separate locations.	At this level, an adequate amount of resources are applied as defined in project specific plans or purchase orders. Applicable technical and administrative requirements (such as specifications, codes, standards, tests and inspections, and acceptance criteria) for procurement of items and services shall be clearly stated in the procurement documents. This level is generally applied to: services or commercial-grade items which are not part of safety systems as described in the QAP, Appendix D.

APPLICATION OF QUALITY LEVELS TO QA PROGRAM CRITERIA

Greatest Level of Assigned Resources <----------> Lowest Level of Assigned Resources

CRITERIA SYNOPSIS	QUALITY LEVEL 1	QUALITY LEVEL 2	QUALITY LEVEL 3	QUALITY LEVEL 4

5.0 Work Processes
• Performed to established technical standards and administrative controls
• Performed to controlled conditions using approved instructions, procedures, or other appropriate means
  • Items identified & controlled to ensure their proper use
  • Items maintained to prevent their damage, loss, or deterioration
  • Equipment used for process monitoring or data collection are calibrated & maintained
	A formal program that implements all of the elements of Criteria 5.
	
	Example: FERMCO, subcontractors, and suppliers procedures shall be developed and documented for anticipated activities, detailing specific direction for each element of the task. Operator qualification and training shall be specified within the procedure.
		A structural program that implements the elements of Criteria 5.
		
		Example: FERMCO, subcontractors, and suppliers procedures shall be developed and documented for designated activities, detailing direction for key elements of the task. Operator qualification and training shall be specified.
			A brief but complete description that implements the elements of Criteria 5.
			
			Example: FERMCO, subcontractors, and suppliers procedures shall be developed and documented for designated activities. Key elements of the task shall be described in brief. Operator shall be qualified to perform task.
				At this level, an adequate amount of resources are applied as defined in project specific plans or purchase orders.
				
				Applicable technical and administrative requirements (such as specifications, codes, standards, tests and inspections, and acceptance criteria) for procurement of items and services shall be clearly stated in the procurement documents.
				
				This level is generally applied to: services or commercial-grade items which are not part of safety systems as described in the QAP, Appendix D.

• *Program to identify, control, and maintain items, control consumables and items with limited shelf life, prevent the use of incorrect or defective items, and control samples*
  • Identify and control items to ensure their proper use and traceability
  • Items maintained to prevent their damage, loss, or deterioration
	Example: FERMCO, subcontractors, and suppliers shall develop and document a maintenance management program for material control, condition, and aging. Periodic inspection shall be performed quarterly.	Example: FERMCO, subcontractors, and suppliers shall develop and document a maintenance management program for material control, condition, and aging. Periodic inspection shall be performed annually.	Example: FERMCO, subcontractors, and suppliers shall develop and document a maintenance management program for material control, condition, and aging. Periodic inspection shall be performed annually (if required).	

000253

6989

APPLICATION OF QUALITY LEVELS TO QA PROGRAM CRITERIA

Greatest Level of Assigned Resources <——————————> Lowest Level of Assigned Resources

CRITERIA SYNOPSIS	QUALITY LEVEL 1	QUALITY LEVEL 2	QUALITY LEVEL 3	QUALITY LEVEL 4
5.0 Work Processes (cont) • *Program to control the handling, storage, shipping, cleaning and preservation of items to prevent damage, loss, or deterioration* • Marking and labeling of items maintained throughout packing, shipping, handling, and storage • Requirements established for offsite transportation. Special protective measures specified and provide when required to maintain acceptable quality. • Low-level waste shipments to the Nevada Test Site Defense Waste Acceptance Criteria, Certification, and Transfer Requirements	Example: FERMCO, subcontractors, and suppliers shall develop and document a material management program for material control. Low-Level waste shipments to NTS are QL-1. Periodic inspection shall be performed quarterly on material management.	Example: FERMCO, subcontractors, and suppliers shall develop and document a material management program for material control. Periodic inspection shall be performed annually on material management.	Example: FERMCO, subcontractors, and suppliers shall develop and document a material management program for material control. Periodic inspection shall be performed annually (if required) on material management.	At this level, an adequate amount of resources are applied as defined in project specific plans or purchase orders. Applicable technical and administrative requirements (such as specifications, codes, standards, tests and inspections, and acceptance criteria) for procurement of items and services shall be clearly stated in the procurement documents. This level is generally applied to: services or commercial-grade items which are not part of safety systems as described in the QAP, Appendix D.
• *Program to control the calibration, maintenance, and use of measuring and test equipment used for monitoring and data collection* • Monitoring and data collection equipment are of the accuracy and type suitable for the intended use • Equipment shall have calibration certification traceable to national standards, where possible • Equipment on which calibration is overdue shall be tagged to use until calibrated	Example: FERMCO, subcontractors, and suppliers shall develop and document a maintenance management program for measuring and test equipment. Periodic inspection shall be performed quarterly.	Example: FERMCO, subcontractors, and suppliers shall develop and document a maintenance management program for measuring and test equipment. Periodic inspection shall be performed annually.	Example: FERMCO, subcontractors, and suppliers shall develop and document a maintenance management program for measuring and test equipment. Periodic inspection shall be performed annually (if required).	

APPLICATION OF QUALITY LEVELS TO QA PROGRAM CRITERIA

Greatest Level of Assigned Resources <——————————> Lowest Level of Assigned Resources

CRITERIA SYNOPSIS	QUALITY LEVEL 1	QUALITY LEVEL 2	QUALITY LEVEL 3	QUALITY LEVEL 4
6.0 Designs • Items/processes designed using sound engineering/scientific principles and appropriate standards • Design/Changes incorporate applicable requirements & design bases • Design interfaces identified & controlled for the purpose of developing, reviewing, approving, releasing, distributing, and revising design inputs and outputs are to be defined • Adequacy of design products verified & validated by individuals or groups other than those who performed the work • Verification and validation work completed before approval and implementation of the design • Computer programs are to be proven through previous use, or verified through testing or simulation prior to use • Changes to computer software shall be controlled to assess the potential impact of the change on the performance of the software • The data collection process for characterizing environmental process and conditions shall be defined, controlled, verified, and documented	A formal program that implements all of the elements of Criteria 6. Example: FERMCO, subcontractors, and suppliers shall have documented detailed Design program to establish processes and procedures to require that design work be based on sound engineering and scientific principles, and to prove control of design inputs and outputs, configuration changes and design changes, documentation and records, and interfaces.	A structural program that implements the elements of Criteria 6. Example: FERMCO, subcontractors, and suppliers shall have documented description of a Design program to establish processes and procedures to require that design work be based on sound engineering and scientific principles, and to prove control of design inputs and outputs, configuration changes and design changes, documentation and records, and interfaces.	A brief but complete description that implements the elements of Criteria 6. Example: FERMCO, subcontractors, and suppliers shall have a documented brief description of a Design program to establish processes and procedures to require that design work be based on sound engineering and scientific principles, and to prove control of design inputs and outputs, configuration changes and design changes, documentation and records, and interfaces.	At this level, an adequate amount of resources are applied as defined in project specific plans or purchase orders. Applicable technical and administrative requirements (such as specifications, codes, standards, tests and inspections, and acceptance criteria) for procurement of items and services shall be clearly stated in the procurement documents. This level is generally applied to: services or commercial-grade items which are not part of safety systems as described in the QAP, Appendix D.

APPLICATION OF QUALITY LEVELS TO QA PROGRAM CRITERIA

Greatest Level of Assigned Resources <——————————> Lowest Level of Assigned Resources

CRITERIA SYNOPSIS	QUALITY LEVEL 1	QUALITY LEVEL 2	QUALITY LEVEL 3	QUALITY LEVEL 4

7.0 Procurement
• Program to ensure that purchased items and services meet established requirements and perform as expected
• Appropriate controls for the selection, determination of suitability, evaluation, and receipt of commercial-grade items to ensure that commercial-grade items performs as expected
• *Suppliers evaluated to ensure that only qualified suppliers are selected*
  • *Pre-Award survey*
  • *Supplier Audit*
  • *Source surveillance*
• *Purchased items and services accepted using specified methods*
  • *source verification*
  • *pre-installation tests*
  • *post-installation tests*
  • *certificates of conformance*
  • *or a combination of these methods*
• Before an item is used or placed in service, procurement, inspection, and test requirements are to be satisfied
• The quality of purchased items and services is to be verified at intervals and to a depth consistent with the complexity, risk, quantity, and procurement frequency of the items or services
	A formal program that implements all of the elements of Criteria 7.
	
	Example: FERMCO, suppliers and subcontractors shall have a documented detailed Procurement program for purchasing items and services, evaluation of potential suppliers, and acceptance methods for procured items and services.
	
	Example: Pre-award surveys shall be conducted at all suppliers prior to procurement. Thereafter, supplier audits shall be conducted at least once every three years, Lab services audits shall be conducted at least once each year. A satisfactory supplier audit for this quality level will satisfy all of the requirements for lower quality levels.
	
	Example: Source surveillance, source inspection, pre-installation tests, and/or post-installation tests may be used to verify the quality of purchased items and services, as determined by the Quality Plan or as dictated by item or service quality concerns.
		A structural program that implements the elements of Criteria 7.
		
		Example: FERMCO, suppliers and subcontractors shall have a documented description of the Procurement program for purchasing items and services, evaluation of potential suppliers, and acceptance methods for procured items and services.
		
		Example: Pre-award surveys shall be conducted at suppliers prior to procurement. Thereafter, supplier audits shall be conducted at least once every three years, Lab services audits shall be conducted at least once each year. A satisfactory supplier audit for this quality level will satisfy the requirements for lower quality levels.
		
		Example: Source surveillance, source inspection, pre-installation tests, and/or post-installation tests may be used to verify the quality of purchased items and services, as determined by the Quality Plan or as dictated by item or service quality concerns.
			A brief but complete description that implements the elements of Criteria 7.
			
			Example: FERMCO, suppliers and subcontractors shall have a documented brief description of the Procurement program for purchasing items and services, evaluation of potential suppliers, and acceptance methods for procured items and services.
			
			Example: Pre-award surveys shall be conducted of suppliers prior to procurement (this may be accomplished with a desk-top audit, past performance review, etc.). A satisfactory supplier audit for this quality level will satisfy the requirements for lower quality levels.
			
			Example: Source surveillance, source inspection, pre-installation tests, and/or post-installation tests may be used to verify the quality of purchased items and services, as determined by the Quality Plan or as dictated by item or service quality concerns.
				At this level, an adequate amount of resources are applied as defined in project specific plans or purchase orders.
				
				Applicable technical and administrative requirements (such as specifications, codes, standards, tests and inspections, and acceptance criteria) for procurement of items and services shall be clearly stated in the procurement documents.
				
				This level is generally applied to: services or commercial-grade items which are not part of safety systems as described in the QAP, Appendix D.
				
				Additionally, appropriate controls are to be in place for the selection, determination of suitability, evaluation, and receipt of commercial-grade items to ensure that commercial-grade items performs as expected.

APPLICATION OF QUALITY LEVELS TO QA PROGRAM CRITERIA

Greatest Level of Assigned Resources <——————————> Lowest Level of Assigned Resources

CRITERIA SYNOPSIS	QUALITY LEVEL 1	QUALITY LEVEL 2	QUALITY LEVEL 3	QUALITY LEVEL 4
8.0 Inspection and Acceptance Testing • Inspection per established criteria • Program to specify type of inspection: source, in-process, final receipt, maintenance, and in-service • Administrative controls and status indicators to preclude inadvertent bypassing of required inspections and prevent inadvertent operation of the item • Personnel do not perform inspections on their own work for acceptance • *Level of inspection and degree of independence of inspection personnel based on risk and complexity* • *Inspection planning activities to identify item characteristics and process to be inspected, the inspection techniques, the acceptance criteria, and the organization responsible for performing the inspection* • *Defined inspection hold points beyond which work is not to proceed until inspection has been completed* • For acceptance criteria not met, deficiencies are to be resolved and corrected area are to be reinspected	A formal program that implements all of the elements of Criteria 8. Example: FERMCO, subcontractors, and suppliers shall have documented detailed Inspection program to specify type of inspection, administrative controls and status indicators for inspections and operation of items or processes, inspection planning, and an acceptance criteria. Level of inspection shall be based on inspection characteristics developed through evaluation plans and/or inspection forms.	A structural program that implements the elements of Criteria 8. Example: FERMCO, subcontractors, and suppliers shall have a documented description of an Inspection program to specify type of inspection, administrative controls and status indicators for inspections and operation of items or processes, inspection planning, and an acceptance criteria. Level of inspection shall be based on inspection characteristics developed through evaluation plans and/or inspection forms.	A brief but complete description that implements the elements of Criteria 8. Example: FERMCO, subcontractors, and suppliers shall have a documented brief description of an Inspection program to specify type of inspection, administrative controls and status indicators for inspections and operation of items or processes, inspection planning, and an acceptance criteria. Level of inspection (if required) shall be based on inspection characteristics developed through evaluation plans and/or inspection forms.	At this level, an adequate amount of resources are applied as defined in project specific plans or purchase orders. Applicable technical and administrative requirements (such as specifications, codes, standards, tests and inspections, and acceptance criteria) for procurement of items and services shall be clearly stated in the procurement documents. This level is generally applied to: services or commercial-grade items which are not part of safety systems as described in the QAP, Appendix D. Example: Receipt Inspection: • Check description • Count items against delivery/P.O. • Check for damage

APPLICATION OF QUALITY LEVELS TO QA PROGRAM CRITERIA

Greatest Level of Assigned Resources <——————————> Lowest Level of Assigned Resources

CRITERIA SYNOPSIS	QUALITY LEVEL 1	QUALITY LEVEL 2	QUALITY LEVEL 3	QUALITY LEVEL 4

8.0 Inspection and Acceptance Testing (cont)
• Acceptance testing per established criteria
  • Test control program for acceptance testing to demonstrate that items will perform as intended
  • Program to include, as appropriate, bench tests and proof tests before installation, pre-operational tests, post-maintenance test, post-modification tests, and operational tests
  • Personnel are not to test their own work for acceptance unless a third-party verification from a qualified third-party is obtained, where applicable
  • Administrative controls and status indicators, such as tags and labels, are to be used to preclude inadvertent bypassing of required tests and prevent inadvertent operation of the item
  • Test procedures are developed and include instruction and prerequisites to perform the test, test article configuration, use of test equipment, acceptance criteria, inspection hold points as required, and provisions of recording test data and its review for completeness and accuracy of the results
	Example: FERMCO, subcontractors, and suppliers shall have documented detailed Testing Processes to specify that items and processes will perform as intended, administrative controls and status indicators for acceptance testing and operation of items or processes, test procedures, and an acceptance criteria.	Example: FERMCO, subcontractors, and suppliers shall have a documented description of Testing Processes to specify that items and processes will perform as intended, administrative controls and status indicators for acceptance testing and operation of items or processes, test procedures, and an acceptance criteria.	Example: FERMCO, subcontractors, and suppliers shall have a documented brief description of Testing Processes to specify that items and processes will perform as intended, administrative controls and status indicators for acceptance testing and operation of items or processes, test procedures, and an acceptance criteria.	At this level, an adequate amount of resources are applied as defined in project specific plans or purchase orders.
				
				Applicable technical and administrative requirements (such as specifications, codes, standards, tests and inspections, and acceptance criteria) for procurement of items and services shall be clearly stated in the procurement documents.
				
				This level is generally applied to: services or commercial-grade items which are not part of safety systems as described in the QAP, Appendix D.

000258

APPLICATION OF QUALITY LEVELS TO QA PROGRAM CRITERIA

Greatest Level of Assigned Resources <——————————> Lowest Level of Assigned Resources

CRITERIA SYNOPSIS	QUALITY LEVEL 1	QUALITY LEVEL 2	QUALITY LEVEL 3	QUALITY LEVEL 4
8.0 Inspection and Acceptance Testing (cont) • Acceptance testing per established criteria (cont) • For acceptance criteria not met, corrected areas are retested, after being corrected, to original requirements				At this level, an adequate amount of resources are applied as defined in project specific plans or purchase orders. Applicable technical and administrative requirements (such as specifications, codes, standards, tests and inspections, and acceptance criteria) for procurement of items and services shall be clearly stated in the procurement documents. This level is generally applied to: services or commercial-grade items which are not part of safety systems as described in the QAP, Appendix D.
• Equipment calibrated & maintained • Program to control the calibration, maintenance, accountability, and use of equipment used for acceptance of items during inspection and testing	Example: FERMCO, subcontractors, and suppliers shall have documented detailed Measuring and Testing Processes to control calibration, maintenance, accountability, and use of equipment used to control any process.	Example: FERMCO, subcontractors, and suppliers shall have a documented description of Measuring and Testing Processes to control calibration, maintenance, accountability, and use of equipment used to control any process.	Example: FERMCO, subcontractors, and suppliers shall have a documented brief description of Measuring and Testing Processes to control calibration, maintenance, accountability, and use of equipment used to control any process.	
• *Equipment calibrated at specified intervals on the basis of the item's required accuracy, intended use, frequency of use, stability characteristics, and other conditions affecting its performance*	A calibration schedule shall be established for each item of M&TE. Calibration frequency shall be based on manufacturer's recommendation, equipment type, use, past experience, and regulatory requirements.	A calibration schedule shall be established for each item of M&TE. Calibration frequency shall be based on manufacturer's recommendation, equipment type, use, past experience, and regulatory requirements.	A calibration schedule shall be established for each item of M&TE. Calibration frequency shall be based on manufacturer's recommendation, equipment type, use, past experience, and regulatory requirements.	
• Equipment labeled, tagged, or otherwise controlled to indicate calibration status and traceability to calibration data				

APPLICATION OF QUALITY LEVELS TO QA PROGRAM CRITERIA

Greatest Level of Assigned Resources <——————————> *Lowest Level of Assigned Resources*

CRITERIA SYNOPSIS	QUALITY LEVEL 1	QUALITY LEVEL 2	QUALITY LEVEL 3	QUALITY LEVEL 4
9.0 Management Assessment • *Planned & periodic assessments by senior management involving all levels of management* • Management problems identified and corrected • Annual assessment of performances conducted by managers of each organization based on compliance and performance data from internal evaluations and independent assessments • Senior management conducts overall assessment of performance using results from the individual organization assessments	A formal program that implements all of the elements of Criteria 9. Example: FERMCO, subcontractors, and suppliers shall have documented detailed planned & periodic assessments performed by senior management at all levels of the program. Example: FERMCO, subcontractors, and suppliers shall have annual assessment of performances which are conducted by managers of each organization based on compliance and performance data from internal evaluations and independent assessments performances.	A structural program that implements the elements of Criteria 9. Example: FERMCO, subcontractors, and suppliers shall have documented description of assessments performed by senior management at all levels of the program. Example: FERMCO, subcontractors, and suppliers shall have biennial assessment (if required) of performances which are conducted by managers of each organization based on compliance and performance data from internal evaluations and independent assessments performances.	A brief but complete description that implements the elements of Criteria 9. Example: FERMCO, subcontractors, and suppliers shall have a documented brief description of assessments (if required) performed by senior management at all levels of the program. Example: FERMCO, subcontractors, and suppliers shall have triennial assessment (if required) of performances which are conducted by managers of each organization based on compliance and performance data from internal evaluations and independent assessments performances.	At this level, an adequate amount of resources are applied as defined in project specific plans or purchase orders. Applicable technical and administrative requirements (such as specifications, codes, standards, tests and inspections, and acceptance criteria) for procurement of items and services shall be clearly stated in the procurement documents. This level is generally applied to: services or commercial-grade items which are not part of safety systems as described in the QAP, Appendix D.
10.0 Independent Assessment • *Planned & periodic assessments by an independent assessment organization* • Personnel technically qualified & knowledgeable in the areas assessed • Annual assessment of the effectiveness of the QA program	A formal program that implements the elements of Criteria 10. Example: FERMCO, subcontractors, and suppliers shall have documented detailed planned & periodic independent assessments performed by personnel qualified and knowledgeable with requirements of education, experience, and training. Example: FERMCO, subcontractors, and suppliers shall have annual assessment performed for the effectiveness and adequacy of the QA program.	A structural program that implements the elements of Criteria 10. Example: FERMCO, subcontractors, and suppliers shall have a documented description of independent assessments performed by personnel qualified (if required) and knowledgeable with requirements of education, experience, and training. Example: FERMCO, subcontractors, and suppliers shall have biennial assessment (if required) of the effectiveness and adequacy of the QA program.	A brief but complete description that implements the elements of Criteria 10. Example: FERMCO, subcontractors, and suppliers shall have a brief description of independent assessments (if required) performed by personnel qualified (if required) and knowledgeable with requirements (if required) of education, experience, and training. Example: FERMCO, subcontractors, and suppliers shall have triennial assessment (if required) of the effectiveness and adequacy of the QA program.	At this level, an adequate amount of resources are applied as defined in project specific plans or purchase orders. Applicable technical and administrative requirements (such as specifications, codes, standards, tests and inspections, and acceptance criteria) for procurement of items and services shall be clearly stated in the procurement documents. This level is generally applied to: services or commercial-grade items which are not part of safety systems as described in the QAP, Appendix D.

KEY SITE DOCUMENTS WHICH IMPLEMENT QA REQUIREMENTS*

CRITERION 1 - PROGRAM

FD-1000	SITEWIDE CERCLA QUALITY ASSURANCE PROJECT PLAN (SCQ)
PL-3035	CONFIGURATION MANAGEMENT
RM-0016	MANAGEMENT PLAN (FERMCO Policies and Requirements Manual)
SDI-100	SITE DOCUMENT INDEX
SSOP-1017	MAINTENANCE OF STANDARDS/REQUIREMENTS IDENTIFICATION DOCUMENTS (S/RIDS)

CRITERION 2 - PERSONNEL TRAINING AND QUALIFICATION

FMPC-0102	TRAINING
FMPC-0106	EMPLOYMENT AND INDOCTRINATION OF NEW PERSONNEL
FMPC-0708	PERSONNEL CERTIFICATION
PL-3032	FERNALD SITEWIDE TRAINING PLAN
RM-0002	TRAINING DEPARTMENT PROGRAM MANUAL
RM-0004	TECHNICAL SUPPORT STAFF SELECTION, TRAINING AND QUALIFICATION PROGRAM
SSOP-0022	QUALIFICATION PROGRAM TRAINING COMPLETION DOCUMENTATION

CRITERION 3 - QUALITY IMPROVEMENT

ED-0001	EVENT NOTIFICATION AND REPORTING
FMPC-0122	OPEN COMMUNICATION OF EMPLOYEE CONCERNS
SSOP-0023	DEVIATION & CORRECTIVE ACTION REPORTING
SSOP-0049	FEMP QUALITY ASSURANCE AUDIT PROGRAM
SSOP-0058	PERFORMING TYPE A,B, & C INVESTIGATIONS
SSOP-0082	QUALITY IMPROVEMENT
SSOP-0709	CONDUCT OF INDEPENDENT SURVEILLANCE ACTIVITY
SSOP-1075	SITEWIDE LESSONS LEARNED

* The list of these key site documents which implement QA requirements is updated and maintained in RM-0016, Management Plan (FERMCO Polices and Requirements Manual), which takes precedence over the list provided here.

KEY SITE DOCUMENTS WHICH IMPLEMENT QA REQUIREMENTS*

CRITERION 4 - DOCUMENTS AND RECORDS

FD-1000	SITEWIDE CERCLA QUALITY ASSURANCE PROJECT PLAN (SCQ)
SSOP-0055	ESTABLISHMENT AND MAINTENANCE OF FEMP ADMINISTRATIVE RECORD
SSOP-0096	DOCUMENT FILING SYSTEM
SSOP-0103	FEMP SITE DOCUMENT SYSTEM
SSOP-0609	RECORDS MANAGEMENT
SSOP-0611	FORM DEVELOPMENT AND CONTROL

CRITERION 5 - WORK PROCESSES

FD-1000	SITEWIDE CERCLA QUALITY ASSURANCE PROJECT PLAN (SCQ)
SSOP-0061	FEMP WORK REQUEST/ORDER PROCEDURE
SSOP-0716	CONTROL OF PROCESSES

CRITERION 6 - DESIGN

PL-3035	CONFIGURATION MANAGEMENT PLAN
	ENGINEERING DIVISION POLICY AND PROCEDURE MANUAL

CRITERION 7 - PROCUREMENT

FD-1000	SITEWIDE CERCLA QUALITY ASSURANCE PROJECT PLAN (SCQ)
FMPC-0302	REQUEST FOR PURCHASE
FMPC-0306	CONTRACT ADMINISTRATION
FMPC-0316	8(A) VENDOR PROGRAM
PL-3035	CONFIGURATION MANAGEMENT
SSOP-0045	IDENTIFYING QUALITY ASSURANCE PROGRAM REQUIREMENTS FOR QUALITY (RISK) LEVELS
SSOP-0315	CONTROLLING THE PURCHASE OF SUPPLIES AND SERVICES
SSOP-0317	INITIATING AND PREPARING A TECHNICAL EVALUATION OF A PROPOSAL

* The list of these key site documents which implement QA requirements is updated and maintained in RM-0016, Management Plan (FERMCO Polices and Requirements Manual), which takes precedence over the list provided here.

KEY SITE DOCUMENTS WHICH IMPLEMENT QA REQUIREMENTS*

CRITERION 8 - INSPECTION AND ACCEPTANCE TESTING

FD-1000	SITEWIDE CERCLA QUALITY ASSURANCE PROJECT PLAN (SCQ)
FMPC-0718	MEASURING AND TEST EQUIPMENT (M&TE) CALIBRATION AND CONTROL
SSOP-0023	DEVIATION & CORRECTIVE ACTION REPORTING
SSOP-0068	INSPECTION OF PROCURED MATERIAL, EQUIPMENT, WORK-IN-PROCESS AND COMPLETED ITEMS
SSOP-1020	QA/QC TAGGING

CRITERION 9 - MANAGEMENT ASSESSMENT

PL-3035	CONFIGURATION MANAGEMENT
SSOP-1068	THE FERMCO EXTERNAL AUDIT AND APPRAISAL MANAGEMENT SYSTEM
SSOP-5014	MANAGEMENT INSPECTION OF FACILITIES PROGRAM (MIFP)

CRITERION 10 - INDEPENDENT ASSESSMENT

FD-1000	SITEWIDE CERCLA QUALITY ASSURANCE PROJECT PLAN (SCQ)
SSOP-0023	DEVIATION & CORRECTIVE ACTION REPORTING
SSOP-0049	FEMP QUALITY ASSURANCE AUDIT PROGRAM
SSOP-0068	INSPECTION OF PROCURED MATERIAL, EQUIPMENT, WORK-IN-PROCESS AND COMPLETED ITEMS
SSOP-0709	CONDUCT OF INDEPENDENT SURVEILLANCE ACTIVITY
SSOP-1004	FEMP DATA VALIDATION PROCEDURE
SSOP-1068	THE FERMCO EXTERNAL AUDIT AND APPRAISAL MANAGEMENT SYSTEM

* The list of these key site documents which implement QA requirements is updated and maintained in RM-0016, Management Plan (FERMCO Polices and Requirements Manual), which takes precedence over the list provided here.

STEP 1.

NON-CONTROLLED COPY

PRESIDENTIAL POLICY

FERMCO Fernald Environmental Restoration Management Corporation	TITLE:	MATERIALS CONTROL AND ACCOUNTABILITY
	NUMBER:	PO - SE - 02 Rev 0
	EFFECTIVE DATE:	04 - 1 - 95

FERMCO will manage a program to control and account for nuclear materials; i.e., depleted, normal and enriched uranium (exclusive of those materials declared to be low level waste.) These materials are property of the Department of Energy, and as such, FERMCO is responsible for the characterization, measurement and tracking of all nuclear material held at the Fernald site.

FERMCO will document the material form, uranium content, isotopic content, and location of all nuclear material. Our nuclear materials control and accountability documentation will reflect a responsible accountability for this government property. Our inventories will be accurate, and our reports of changes in inventories to the Department of Energy will be timely.

FERMCO will develop and implement a plan to control and account for nuclear materials. The plan will identify responsibilities and requirements for program management, threat considerations, performance criteria, the accounting system, physical inventories, measurements and measurement control, control limits, loss detection elements, nuclear material alarms, access control, containment methods and surveillance plans. FERMCO will use graded safeguards to determine the amount of control required for nuclear materials. Management will ensure that implementation of elements of the plan is coordinated among those FERMCO organizations who will follow it. FERMCO will ensure that training is provided to all personnel involved in performing materials control and accountability functions.

3/22/95
Date

R. E. Hatt, for
Don Ofte

TABLE OF CONTENTS

1.0 PURPOSE 2

2.0 SCOPE 2

3.0 APPLICABLE DOCUMENTS 2
- 3.1 Source Documents 2
- 3.2 Reference Documents 2

4.0 DEFINITIONS 2

5.0 RESPONSIBILITIES 3

6.0 GENERAL 3

7.0 HEALTH AND SAFETY REQUIREMENTS 4

8.0 PROCEDURE 5
- 8.1 Preparation of a Container for Free Liquid (Water) Removal 5
- 8.2 Removal of Water from Drums 6
- 8.3 Removal of Water from Metal Boxes 8
- 8.4 Adding Absorbent and Closing Containers 10
- 8.5 Disposing the Removed Water 13

RECORD OF ISSUE/REVISION 23

LIST OF FIGURES

Figure 1, Illustration of a Spill Pallet 15
Figure 2, Illustration of a Metal Box Inspection/Water Removal Stand 16
Figure 3, Installation of Bolt-Type Locking Ring 17
Figure 4, LLRW Drum Labeling Illustration 18
Figure 5, Item Production/Certification Identification, FS-F-1945-XX 19
Figure 6, Permanent Inventory Record, FS-F-367 20
Figure 7, LLRW White Metal Box Labeling Illustration 21

LIST OF ATTACHMENTS

Attachment A, Water Dumpster Record 22

1.0 **PURPOSE**

1.1 The purpose of this procedure is to direct removal of free liquids from Level Radioactive Waste (LLRW) Containers for disposition, including off-site shipment.

2.0 **SCOPE**

2.1 This procedure is applicable to free liquid removal from containerized LLRW as required in all areas.

3.0 **APPLICABLE DOCUMENTS**

3.1 Source Documents

3.1.1 DOE Order 5480.19, "Conduct of Operations Requirements for DOE Facilities"

3.1.2 D10-00-020, "Remediation Support Operations Division Document System"

3.1.3 NVO-325, "Nevada Test Site Defense Waste Acceptance Criteria, Certification, and Transfer Requirements"

3.2 Reference Documents

3.2.1 20-C-111, "Transport of Low Level Radioactive Waste and Nuclear Material"

3.2.2 20-C-600, "Overpacking Defective Containers"

3.2.3 01-C-902, "Transferring of Plant 1 Effluent for Disposal"

3.2.4 20-C-623, "Receipt and Storage of Low Level Radioactive Waste (LLRW) and Nuclear Material (NM)"

3.2.5 20-C-910, "Venting Potentially Explosive Drums"

3.2.6 20-C-918, "Preparation For and Movement Of Unvented Drums"

3.2.7 01-C-602, "Low Level Radioactive Waste (LLRW) Shipment Preparation"

3.2.8 RM-0005, "FEMP Lot Marking and Color Coding System"

3.2.9 20-C-606, "Hazardous Material Spill Cleanup"

4.0 **DEFINITIONS**

4.1 Free Liquid - Any free-flowing liquid or liquid that readily separates from the solid portion of a waste under ambient temperature and pressure conditions. Ice is considered a free liquid.

6989

4.0 DEFINITIONS (cont.)

4.2 Low Level Radioactive Waste (LLRW) - Waste that contains radioactivity and is not classified as high level waste, spent nuclear fuel, transuranic waste, spent nuclear fuel or 11 (e)(2) byproduct as defined by DOE Order 5820.2A.

5.0 RESPONSIBILITIES

5.1 The **Supervisor** shall be responsible for:

5.1.1 Designating the containers that require free liquid removal.

5.1.2 Supplying the required packaging materials.

5.1.3 Notifying and coordinating activities with supporting organizations, if assistance is required.

5.1.4 Ensuring that waste containers are labeled as required.

5.1.5 Ensuring that personnel performing operations per this procedure wear the PPE specified by the work permit.

5.1.6 Ensuring that personnel have been briefed to perform the assigned tasks.

5.1.7 Ensuring all necessary work permits are obtained and posted.

5.1.8 Reviewing applicable Material Safety Data Sheets (MSDSs) with Operators.

5.1.9 Immediately notify the Assistant Emergency Duty Officer (AEDO) in the event of a hazardous material spill or abnormal event.

5.2 **Materials Control and Accountability (MC&A)** shall be responsible for providing the required container labeling information and for updating the LLRW inventory records.

5.3 **Operators** shall be responsible for:

5.3.1 Complying with this procedure.

5.3.2 Immediately reporting a spill or release to the Supervisor in accordance with 20-C-606, "Hazardous Material Spill Cleanup".

5.4 **Radiological Safety** shall be responsible for:

5.4.1 Issuing a Radiation Work Permit (RWP).

5.4.2 Monitoring work activities to ensure Radiological Safety requirements are met when work is being performed.

6.0 GENERAL

6.1 Containers processed per this procedure shall contain characterized Low Level Radioactive Waste.

6.0 GENERAL (cont.)

6.2 Warnings, Cautions, and Notes shall precede the Section, Sub-Section, Step, Sub-Step or Item to which they apply.

7.0 HEALTH AND SAFETY REQUIREMENTS

7.1 All personnel performing duties covered by this procedure shall adhere to all sign postings and requirements including but not limited to RWPs.

7.2 Safety glasses with side shields shall be worn unless other eye protection is specified by the work permit, S&H, or posted signs.

7.3 A two-way communications device and emergency response equipment shall be available to personnel performing this procedure.

7.4 Personal Protective Equipment (PPE) shall be worn when required.

7.5 Leather-palm gloves shall be worn when handling drums, operating equipment, and when handling rough, sharp-edged, or contaminated materials.

7.6 HEPA-type filter vacuum cleaners or a vacuum system with a current DOP test label properly affixed shall be used.

7.7 Before moving or processing containers per this procedure, as required perform the activities directed by Procedure 20-C-910, "Venting Potentially Explosive Drums" and Procedure 20-C-918, "Preparation For and Movement of Unvented Drums".

7.8 Personnel shall wear PPE to protect against being splashed when working with containers of liquid. In the case of contact with a chemical, contaminated clothing shall be removed and the affected body area thoroughly flushed with water in a Safety Shower/Eye Bubbler. Injured personnel shall report to Medical Services for treatment as soon as possible.

7.9 Any circumstance which could have resulted in an intake of radioactive materials by inhalation, ingestion or absorption shall immediately be reported to a Supervisor. The Supervisor shall immediately report the circumstance of possible radioactive materials intake to S&H Radiological Control Department for evaluation. When the suspect isotope is uranium, the involved personnel shall report to the Urine Sampling Station at the end of their shift to complete an Incident Investigation Report (IIR) (Form No. FS-F-1458), and submit an incident urine sample. The involved personnel shall also report to the Urine Sampling Station at the start of their next shift to submit a follow up urine sample. When the suspect isotope is other than uranium, the involved personnel shall report to the Dosimetry Section of the Radiological Control Department for further determination of actions. Employees are responsible for complying with additional requirements as specified by the Radiological Control Section.

7.0 HEALTH AND SAFETY REQUIREMENTS (cont.)

7.10 Any situation which could have resulted in the inhalation, ingestion, or absorption of a hazardous material shall immediately be reported to a Supervisor or to the Assistant Emergency Duty Officer (AEDO), who will immediately report the circumstances to Medical and Industrial Hygiene. The involved personnel shall be directed by the Supervisor or AEDO as to when and where to report for medical evaluation, completion of an Incident Investigation Report (IIR) (Form No. FS-F-1458), and submitting bioassay samples (e.g. blood, urine). Employees are responsible for complying with any additional requirements as specified by S&H.

8.0 PROCEDURE

8.1 Preparation of a Container for Free Liquid (Water) Removal

8.1.1 Check that a Radiation Work Permit (RWP) and/or Chemical Work Permit is posted.

NOTE: The Supervisor shall obtain a Radiation Work Permit to establish radiological controls.

8.1.2 Notify the Supervisor if no RWP is posted.

NOTE 1: The Supervisor shall designate a liquid removal area and specify any preparations necessary to ready the area for the free liquid removal activities.

NOTE 2: Drivers shall move containers per Procedure 20-C-111, "Transport of Low Level Radioactive Waste and Nuclear Material". Documentation of LLRW container movements shall be per Procedure 20-C-623, "Receipt and Storage of Low Level Radioactive Waste (LLRW) and Nuclear Material (NM)".

8.1.3 Place a container to be processed in the designated liquid removal area.

8.1.4 IF the container that directly holds the material is in an overpack container(s),
THEN remove the lid(s) of the overpack container(s).

CAUTION

If any irritating or unusual vapors escape from the container, notify the Supervisor before proceeding further.

8.1.5 Remove the lid from the container.

8.1.6 Request an organic vapor inspection if required by the Work Permit.

8.0 **PROCEDURE** (cont.)

8.1 Preparation of a Container for Free Liquid (Water) Removal (cont.)

8.1.7 Inspect the contents of the container to determine the presence of water.

A. IF water is present in a drum, THEN go to Section 8.2 of this procedure.

B. IF water is not present in a drum, THEN go to Section 8.5 of this procedure.

C. IF water is present in a metal box, THEN go to Section 8.3 of this procedure.

8.2 Removal of Water from Drums

NOTE: The Supervisor shall specify the method to be used.

8.2.1 One of the following three methods may be used for the removal of water from drums depending on the type of the material:

A. Use the method described in Section 8.2.2 of this procedure for materials from which water can readily be vacuumed or pumped.

B. Use the method described in Section 8.2.3 of this procedure for materials from which water cannot be readily vacuumed or pumped.

C. Use the method described in Section 8.2.4 of this procedure for materials from which water can readily be decanted and which can be retained in the container by a device.

8.2.2 Vacuum/pump water from containers of LLRW as follows:

NOTE: When using a pump, the removed water can be collected in a sump or in a collection drum. The collection method shall be designated by the Supervisor.

A. Assemble a suitable pump or wet vacuum along with the required hoses and place the pump/vacuum next to the container being processed. The vacuum assembly may include an inline water collection drum.

B. Perform the following when using a pump:

1. Put the discharge hose of the pump into the collection drum or the sump opening.

2. Secure the hose to the collection drum or in the sump opening with a strap to keep it in the drum or sump when the water flow starts.

8.0 **PROCEDURE** (cont.)

8.2 Removal of Water from Drums (cont.)

C. Operate the pump or vacuum per applicable procedures.

D. Turn on the pump or vacuum and use the inlet or suction hose to remove as much water as possible from the container.

E. Turn off the pump or vacuum when all the water has been removed.

F. IF water removal is completed for the shift, THEN drain the pump hoses into the collection drum or sump, or empty the vacuum if required.

G. Handle the removed water per Section 8.5 of this procedure.

H. Complete the processing of the container from which the water was removed per Section 8.4 of this procedure.

8.2.3 Drain water from drums of LLRW as follows:

A. Place the drum to be drained on a spill pallet (See Figure 1).

B. Center the drum on top of the pallet.

C. Punch a hole in the side of the drum as close to the bottom rim as possible using a pick hammer or other suitable instrument.

D. Tilt the drum toward the hole.

E. Allow the water to drain.

F. Allow the drum to drip for five minutes after the water flow stops.

G. Move the drum off of the spill pallet.

H. Handle the removed water per Section 8.5 of this procedure.

I. Complete the processing of the drum from which the water was removed per Section 8.4 of this procedure.

8.2.4 Decant water from drums of LLRW as follows:

A. Place the drum to be drained near a collection drum or an approved sump.

NOTE: A decanting lid is made by drilling approximately ten 1/2 inch holes in one side of a drum lid.

B. Install a decanting lid on the drum from which water is being removed.

8.0 **PROCEDURE** (cont.)

8.2 Removal of Water from Drums (cont.)

NOTE: Let the drum remain inverted over the collection drum or sump a sufficient period of time to completely drain the water.

C. Lift and rotate the drum over the collection drum or sump using a drum inverter attachment so that the water is drained from the drum contents.

D. Return the drum to an upright position and set it on the floor.

E. Remove the decanting lid from the drum.

F. Complete the processing of the drum from which water was removed per Section 8.4 of this procedure.

G. Handle the removed water per Section 8.5 of this procedure.

8.3 Removal of Water From Metal Boxes

NOTE: The Supervisor shall specify the method to be used.

8.3.1 Use one of two methods for the removal of water from metal boxes depending on the form of the material.

NOTE: Method A is the preferred method to be used. Use of Meth. B requires approval of the LLW Packaging Manager.

A. Use the method described in Section 8.3.2 of this procedure for materials from which water can be vacuumed or pumped.

B. Use the method described in Section 8.3.3 of this procedure for materials from which water cannot be readily vacuumed or pumped or do not allow access to the water without unpacking the box.

8.3.2 Vacuum/pump water from metal boxes as follows:

A. Place a length of 4" x 4" wood under one end of the box.

B. Remove the water from the lower end of the box per the instructions in Section 8.2.2 of this procedure.

6989

8.0 PROCEDURE (cont.)

8.3 Removal of Water From Metal Boxes (cont.)

8.3.3 Drain the water from metal boxes as follows:

NOTE: Drivers shall move containers per Procedure 20-C-111, "Transport of Low Level Radioactive Waste and Nuclear Material". Documentation of LLRW container movements shall be per Procedure 20-C-623, "Receipt and Storage of Low Level Radioactive Material (LLRW) and Nuclear Material (NM)".

A. Place the metal box on the metal box inspection/water removal stand (See Figure 2).

B. Place a spill pallet (See Figure 1) under the lower end of the box so that it will catch water drained from the end of the box.

NOTE: Position the holes in the end of the box, just above the bottom of the box.

C. Drill four 3/16 inch holes in the lower end of the box using a compressed air powered drill.

D. Allow the box to drain for at least 15 minutes after the water flow stops.

E. Do the following in cases where the complete removal of water cannot be visually or otherwise positively confirmed:

1. Have the drain holes temporarily repaired.

2. Replace the lid.

NOTE: Drivers shall move containers per Procedure 20-C-111, "Transport of Low Level Radioactive Waste and Nuclear Material". Documentation of LLRW container movements shall be per Procedure 20-C-623, "Receipt and Storage of Low Level Radioactive Waste (LLRW) and Nuclear Material (NM)".

3. Remove the box from the stand.

4. Transport the box to Building 30A.

5. Request that the box be inspected for free water using Real Time Radiography (RTR).

NOTE: A box which is determined to still contain free water shall be processed as directed by the Supervisor to remove the remaining water.

6. Return the box to the water removal processing area.

8.0 **PROCEDURE** (cont.)

8.3 Removal of Water From Metal Boxes (cont.)

F. Repair the box (permanently) per the following instructions after water removal has been confirmed.

NOTE: These instructions specify the preferred method for repair of drain holes in metal boxes. In cases where this method is not successful in repairing these holes, a disposition of the metal box shall be specified by the LLW Packaging Manager.

1. Dry the area around the holes.

2. Fill the holes [illegible]n caulking.

3. Install a 1/4" [illegible]4 x 1 1/2" self tapping screw with bonded washer in each hole.

G. When water removal activities are completed, complete the processing of the metal box per Section 8.4 of this procedure.

H. Handle the drained water per Section 8.5 of this procedure.

8.4 Adding Absorbent and Closing Containers

NOTE: The Supervi[illegible]r shall determine if the addition of absorbent is required. The addition of absorbent and the type and amount of absorbent to be added to a container is specified in the Task Order/Work Plan for the waste containers being processed.

8.4.1 Add to the container the amount of absorbent specified by the Supervisor.

NOTE: The Supervisor shall specify the disposition of the drum.

8.4.2 IF a drum is to be returned to storage and requires overpacking, THEN proceed as follows:

A. Place the lid and lock ring on the drum.

B. Tighten the lock ring bolt.

C. Overpack and store as directed by procedure 20-C-600, "Overpacking Defective Containers".

8.0 **PROCEDURE** (cont.)

8.4 Adding Absorbent and Closing Containers (cont.)

8.4.3 If a drum is to be returned to storage and does not require overpacking, close the drum and store as directed by the following:

A. Place a lid and a bolt-type lock ring on the drum. The ring lugs and bolt shall be within six inches of the drum seam (drum center line).

B. Ensure that the lock ring bolt lugs are facing the body of the drum.

C. Tighten the locking bolt until the lid is secured. See "Installation of Bolt-Type Locking Ring" (Figure 3).

D. Tighten the locking nut against the threaded lug (right lug) by hand.

E. Tighten the nut 1/4 turn using a wrench.

F. Dab the bolt with red paint as a visual code designating that the tightening procedure has been completed.

G. Obtain the gross weight of the drum.

H. Correct the stenciled information on the drum per RM-0005, "FEMP Lot Marking and Color Coding System".

I. Correct the container labeling as required (See Figure 4).

J. Ensure that the "Item Production/Certification/Identification" Form No. FS-F-1945-XX (Figure 5) is corrected for the container.

K. Give the completed 65 card to the Supervisor.

NOTE 1: The Supervisor shall give the completed 65 card to the MC&A representative.

NOTE 2: The MC&A representative shall advise when a "Permanent Inventory Record" is required for a container.

L. Fill out a "Permanent Inventory Record", Form No. FS-F-367 (Figure 6) for the container, if required by MC&A.

NOTE: Drivers shall move containers per procedure 20-C-111, "Transport of Low Level Radioactive Waste and Nuclear Material". Documentation of LLRW container movements shall be per procedure 20-C-623, "Receipt, Storage and Inspection of Low Level Radioactive Waste and Nuclear Material".

M. Store the container as directed by the Supervisor.

8.0 **PROCEDURE** (cont.)

8.4 Adding Absorbent and Closing Containers (cont.)

NOTE: The Supervisor shall specify the disposition of the drum.

8.4.4 IF a drum is to be prepared for shipment,
THEN prepare it in accordance with Procedure 01-C-602, "Low Level Radioactive Waste (LLRW) Shipment Preparation."

NOTE: The Supervisor shall specify the disposition of the metal box.

8.4.5 For a metal box to be returned to storage, close the box and store as directed by the following:

NOTE: The following instructions are directing the closure of the standard bolt closure box. The Supervisor shall provide instructions for the closure of a box that uses a different type of closure device.

A. Close the box as follows:

1. Clean the box and lid sealing surfaces with a rag.

2. Place the rage in the box.

3. Peel the protective paper from the foam-strip gasket.

4. Apply the gasket carefully to the sealing surface of the box or the sealing surface of the lid.

5. Place the lid carefully on the box.

6. Install the bolts, washers, and nuts and tighten securely.

NOTE 1: The Supervisor shall specify the scale to be used.

NOTE 2: Drivers shall move containers per Procedure 20-C-111, "Transport of Low Level Radioactive Waste and Nuclear Material". Documentation of LLRW container movements shall be per Procedure 20-C-623, "Receipt and Storage of Low Level Radioactive Waste (LLRW) and Nuclear Material (NM)".

B. Obtain a gross weight for the box.

C. Mark the gross weight on the box using indelible ink or paint. Place the gross weight marking as indicated in Figure 7 such that it can later be covered by a Shipping Bar Code Label.

D. Ensure that the box is marked per RM-0005, "FEMP Lot Marking and Color Coding System" and Figure 7.

8.0 PROCEDURE (cont.)

8.4 Adding Absorbent and Closing Containers (cont.)

E. Ensure that the "Item Production/Certification/Identification" (Figure 5), Form No. FS-F-1945-XX (65 Card), is corrected for the container.

F. Give the completed 65 card to the Supervisor.

NOTE 1: The Supervisor shall give the completed 65 card to the MC&A representative.

NOTE 2: The MC&A representative shall advise when a "Permanent Inventory Record" is required for a container.

G. IF required by MC&A,
THEN fill out a "Permanent Inventory Record", Form No. FS-F-367 (Figure 6) for the container.

NOTE 1: Drivers shall move containers per Procedure 20-C-111, "Transport of Low Level Radioactive Waste and Nuclear Material". Documentation of LLRW container movements shall be per Procedure 20-C-623, "Receipt and Storage of Low Level Radioactive Waste (LLRW) and Nuclear Material (NM)".

NOTE 2: Containers of LLRW shall be stored in locations as designated by Waste Operations Support.

I. Store the container as directed by the Supervisor.

8.4.6 IF a metal box is to be prepared for shipment,
THEN prepare it in accordance with Procedure 01-C-602, "Low Level Radioactive Waste (LLRW) Shipment Preparation."

8.5 Disposing the Removed Water

8.5.1 IF the removed water was collected in a sump or the collection drums were emptied into a sump,
THEN dispose of the sump solution per the applicable procedure.

8.5.2 Dispose of water collected in a drum as follows:

A. Pump or dump the collection drum into an approved sump.

B. Pump the water in the collection drum to a water dumpster and dispose of as follows:

1. Record the dumpster identification and date filled on the "Water Dumpster Record" (See Figure 7) when the water dumpster is full.

2. Remove a dip sample from the dumpster using a sampling cup.

8.0 **PROCEDURE** (cont.)

8.5 Disposing the Removed Water (cont.)

3. Check the pH of the sample using pH indicating test paper.

4. Notify the Supervisor if the pH is less than 7. The Supervisor may authorize adjustment of by specifying an addition amount of lime or magnesium oxide to the water in the dumpster.

5. Record pH on "Water Dumpster Record" (See Figure 7).

6. Return the sample to the dumpster.

7. Sign the "Water Dumpster Record" (See Figure 7).

8. Give the "Water Dumpster Record" to the Supervisor.

   NOTE: The Supervisor shall verify, by reviewing the list of waste containers processed, that the source of the water in the dumpster was characterized low level radioactive waste.

9. Notify the Supervisor that the dumpster is ready to be moved.

   NOTE: Any equipment, material, or personnel leaving an area of higher contamination going to an area of lower contamination must be surveyed prior to exit.

10. Move the dumpster to Plant 8 for disposal of effluent in accordance with Procedure 20-C-111, "Transport of Low Level Radioactive Waste (LLRW) and Nuclear Material (NM)" when instructed to do so by the Supervisor.

SUPERVISOR

11. Contact the Plant 8 Supervisor.

12. Determine when the dumpster may be moved to Plant 8 for disposal of effluent.

13. Direct the dumpster to be moved to Plant 8 at the scheduled time.

6989

ILLUSTRATION OF A SPILL PALLET

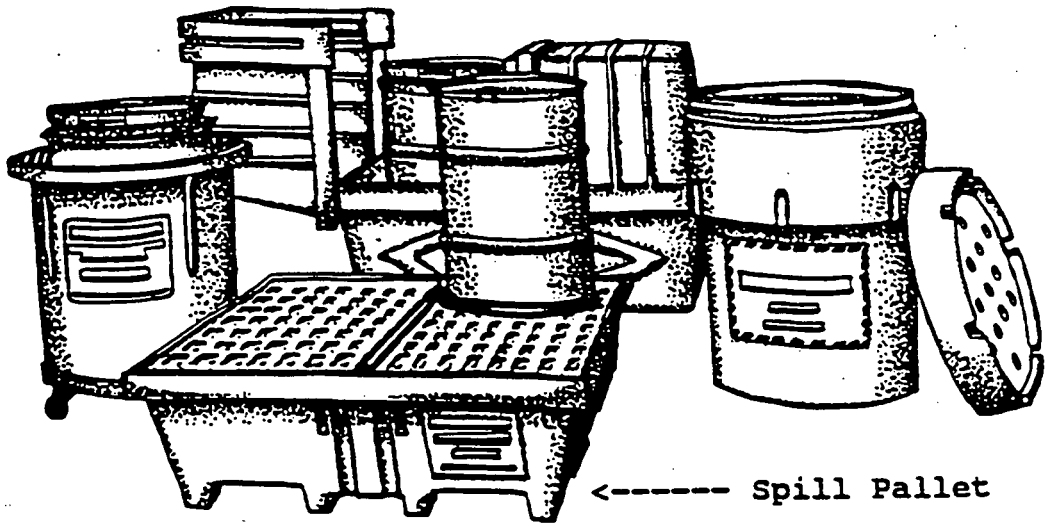

ILLUSTRATION OF A SPILL PALLET
Figure 1

0800

ILLUSTRATION OF A METAL BOX INSPECTION/WATER REMOVAL STAND

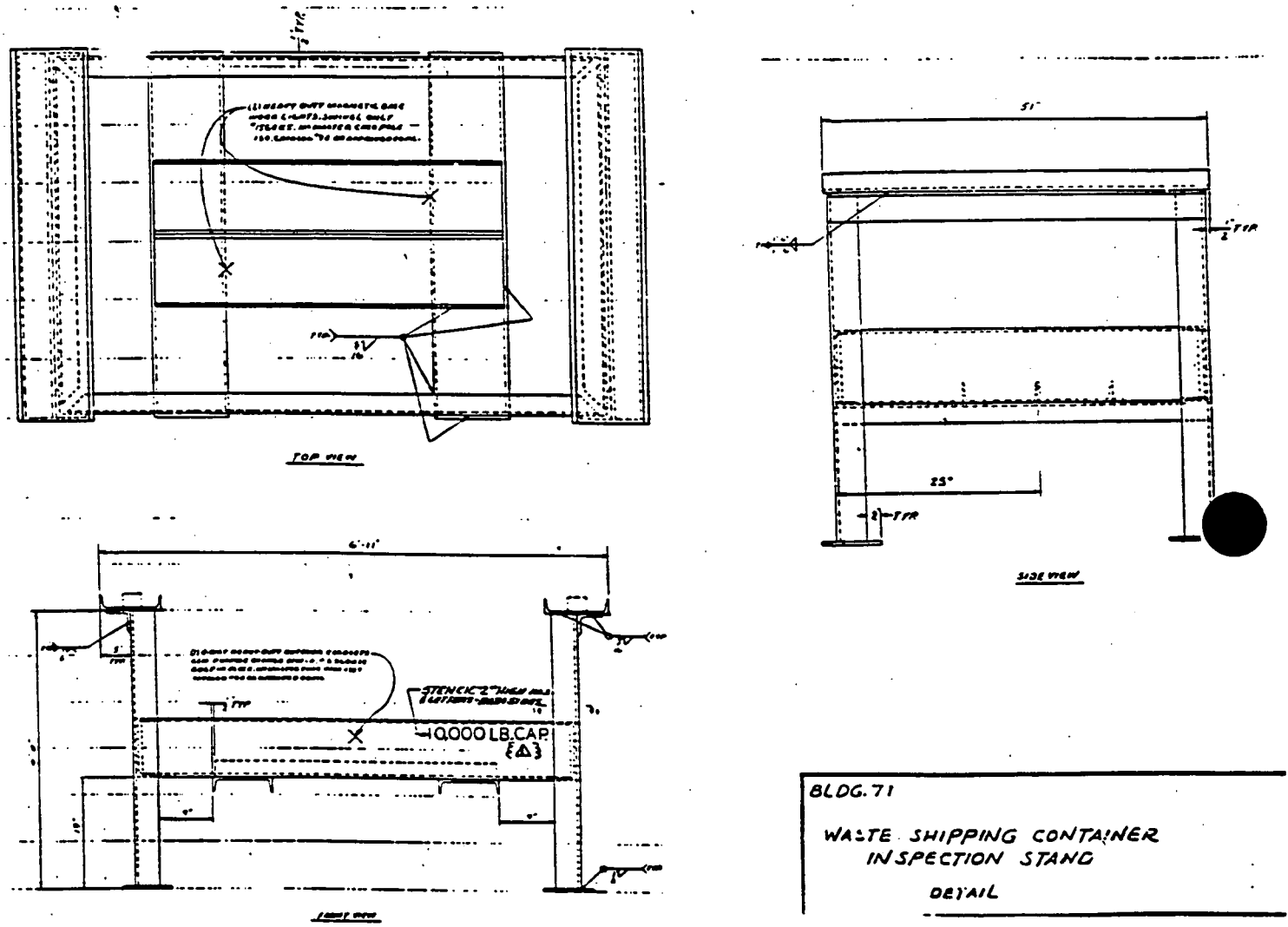

ILLUSTRATION OF A METAL BOX INSPECTION/WATER REMOVAL STAND
Figure 2

INSTALLATION OF BOLT-TYPE LOCKING RING

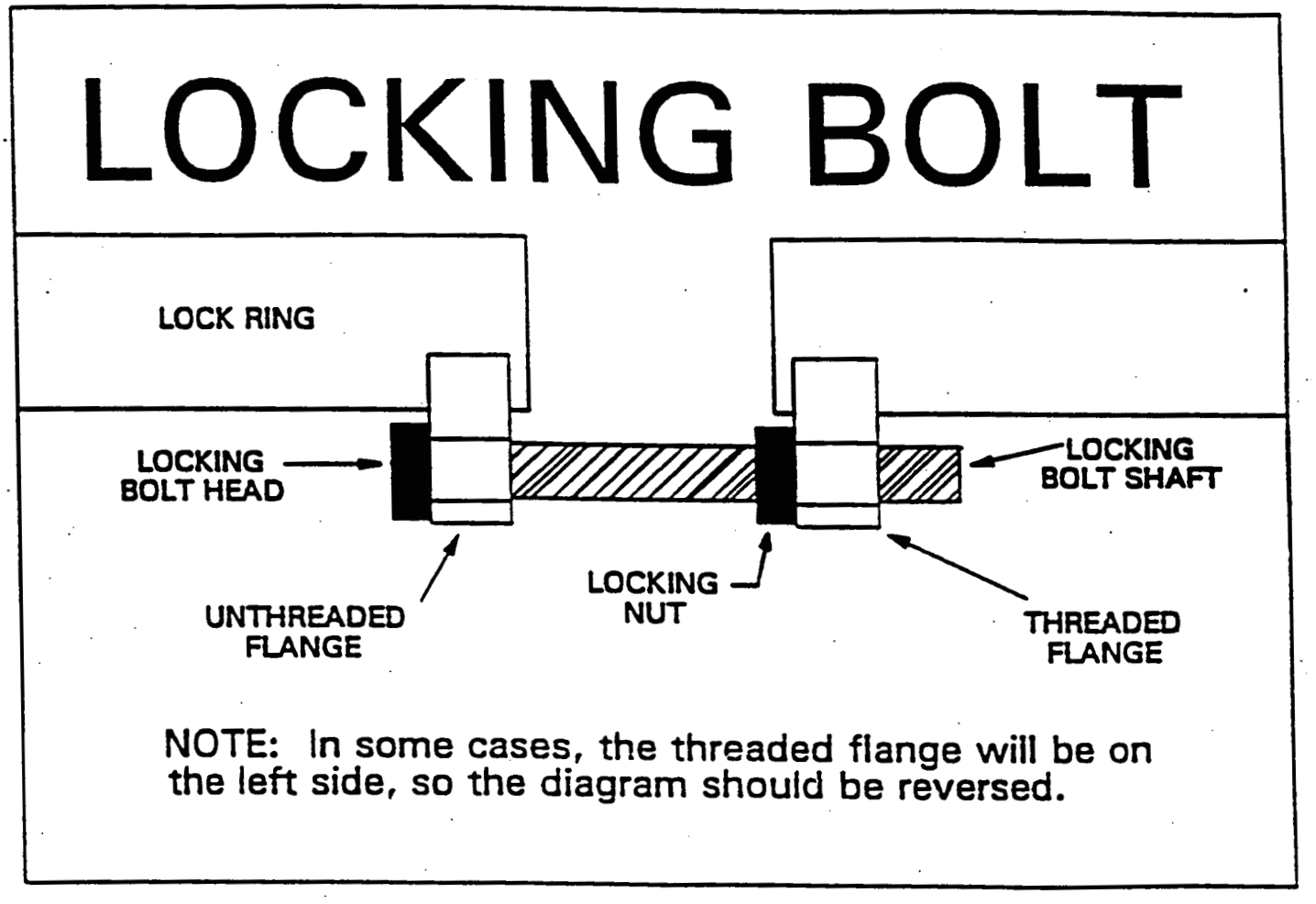

INSTALLATION OF BOLT-TYPE LOCKING RING
Figure 3

0880

LLRW DRUM LABELING ILLUSTRATION

EXAMPLE OF LABELS/MARKINGS
OPEN HEAD DRUM

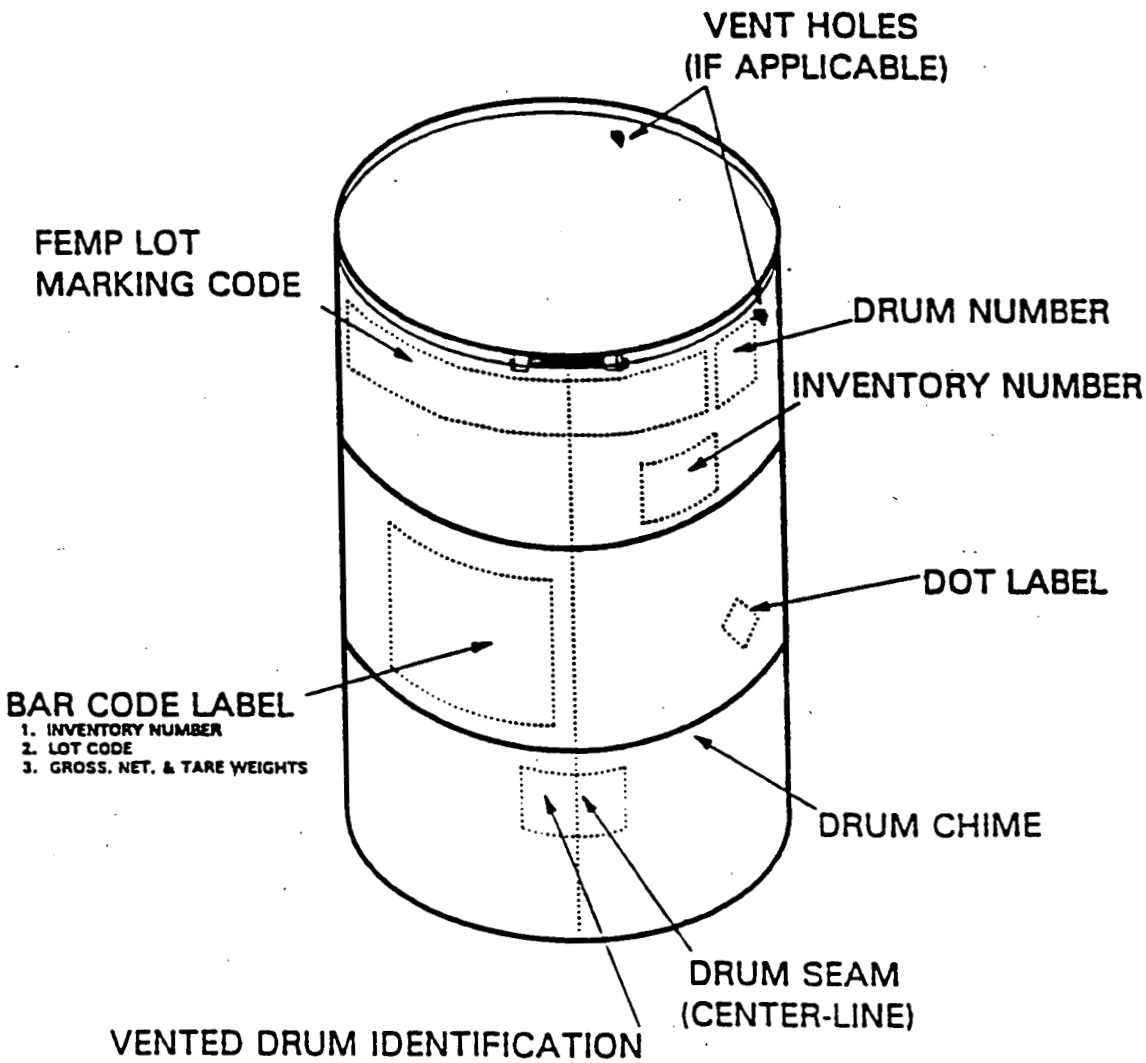

DIAGRAM OF LOW-LEVEL WASTE DRUM

LLRW DRUM LABELING ILLUSTRATION
Figure 4

- 6989

ITEM PRODUCTION/CERTIFICATION IDENTIFICATION
FS-F-1945-XX

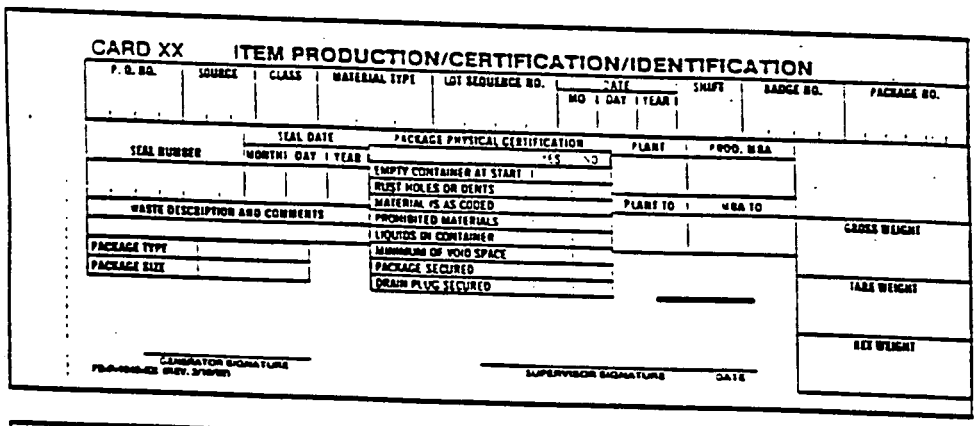

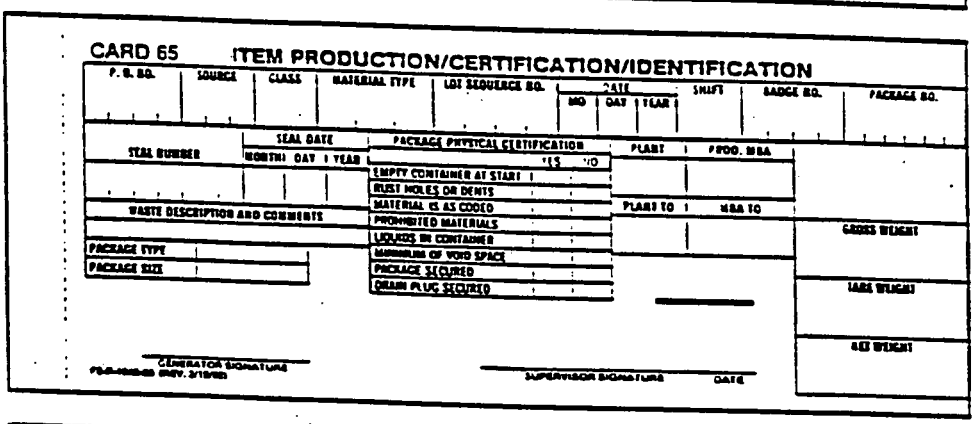

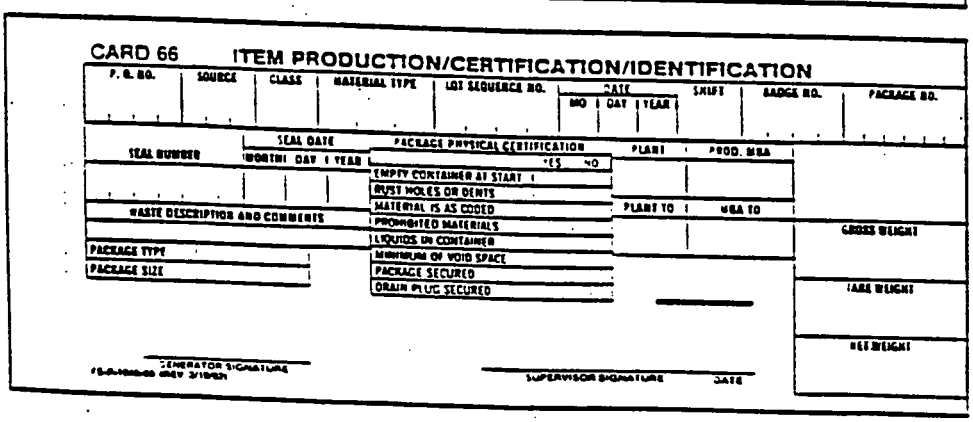

ITEM PRODUCTION/CERTIFICATION IDENTIFICATION
FS-F-1945-XX
Figure 5

0803

PERMANENT INVENTORY RECORD
FS-F-367

DATE:	INVENTORY SHEET NUMBER:
PLANT:	AREA:	NUCLEAR MATERIAL:

FEMP
PERMANENT INVENTORY RECORD

LINE NO.	BADGE NUMBER (4-6)	INVENTORY NUMBER	LOT NUMBER					DRUM NO.	GROSS WEIGHT POUNDS	TARE WEIGHT POUNDS (74-80)	NET WEIGHT POUNDS (74-80)	NDA (40-42)	LOCATION			DRUM SIZE (40-42)	(✓) YES	
			P. O. NUMBER (20-23)	SOURCE (24-26)	CLASS (27)	MATERIAL (28-30)	SEQUENCE (31-34)						ROW.	STACK	LEVEL		OP	PODS
1																		
2																		
3																		
4																		
5																		
6																		
7																		
8																		
9																		
10																		
11																		
12																		
13																		
14																		
15																		
18																		
19																		
20																		

FS-F-367 (REV. 10/93)

PERMANENT INVENTORY RECORD
FS-F-367
Figure 6

6989

LLRW WHITE METAL BOX LABELING ILLUSTRATION

LABELING WHITE METAL BOX FOR STORAGE

STENCIL THE REQUIRED INFORMATION USING 2 INCH HIGH CHARACTERS ONTO THE CENTER OF EACH SIDE AND ON THE UPPER RIGHT CORNER OF ONE END OF THE METAL BOX.

REQUIRED INFORMATION

SERIAL NUMBER
INVENTORY NUMBER
LOT CODE
GROSS WEIGHT
TARE WEIGHT
NET WEIGHT

LOCATION OF INFORMATION

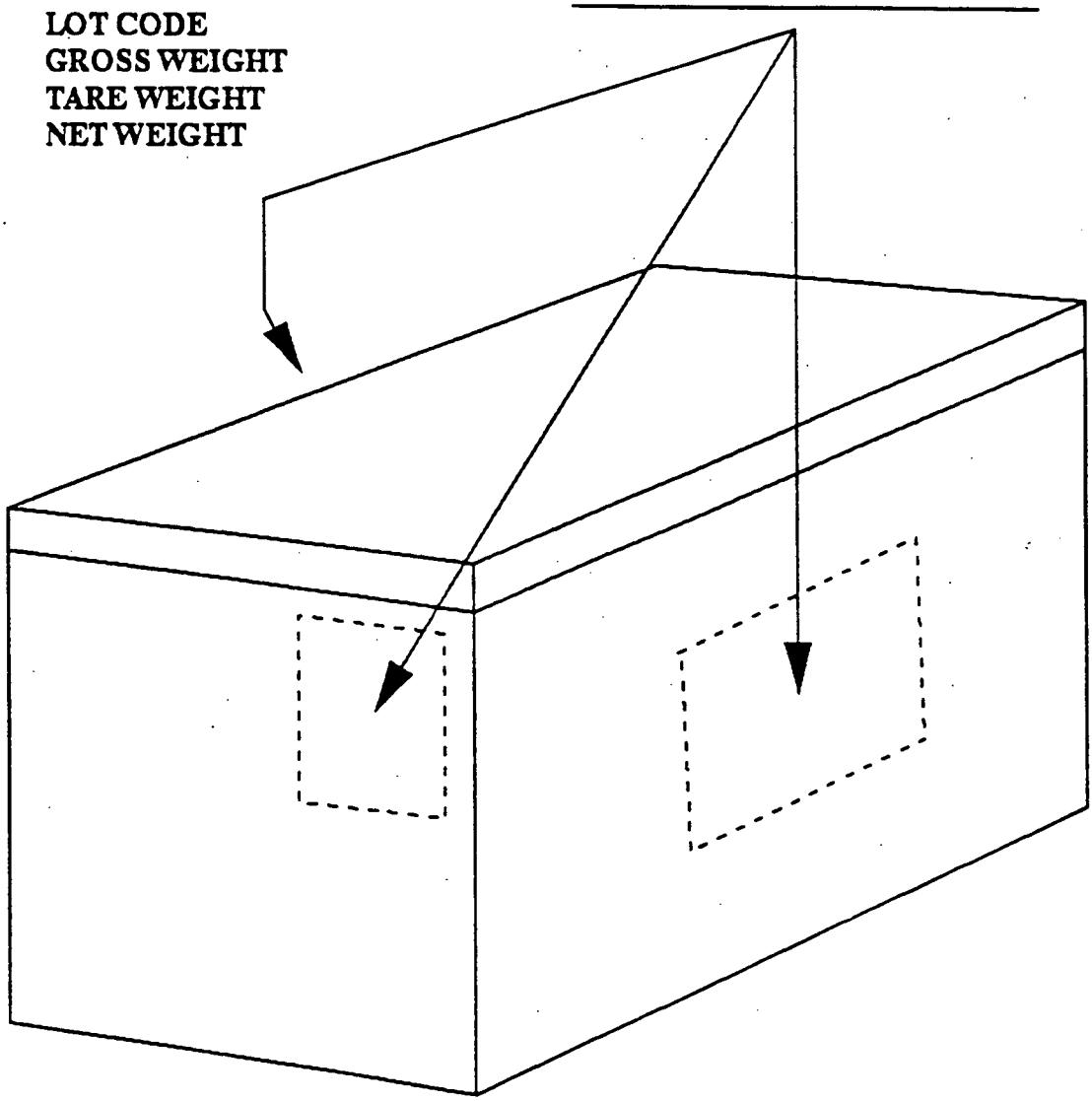

LLRW WHITE METAL BOX LABELING ILLUSTRATION
Figure 7

6383

WATER DUMPSTER RECORD
(Typical)

Dumpster I.D. Number:_____

Date Filled:_____

pH:_____ If pH is less than 7, notify Supervisor.

HAZWAT Signature:_____ Badge #_____

This dumpster contains water removed from characterized low level radioactive waste. The waste contained no identified hazardous waste.

Supervisor Signature:_____ Badge #_____

WATER DUMPSTER RECORD
Attachment A

RECORD OF ISSUE/REVISION

6989

DATE	REV. NO.	DESCRIPTION AND AUTHORITY
03-20-95	0	Procedure requirement for Liquid Removal From Containerized Low Level Radioactive Waste per Request No. P95-0043, initiated by K. Bristol. This procedure supersedes 01-C-604.

STEP 2.

6989

NON-CONTROLLED COPY

CONTROL NO. [redacted]
SITE PROCEDURE EW-0001 (SSOP-0002)
REVISION NO. 5

INITIATING WASTE CHARACTERIZATION ACTIVITIES USING THE MATERIAL EVALUATION FORM (MEF)

Effective Date: 02-13-95

Originator (Subject Expert): _____
Date

Checker Concurrence: _____
Date

APPROVED BY: _____ 2/15/95
Terence D. Hagen, Manager of Environmental Restoration and Waste Management
Date

FERNALD ENVIRONMENTAL MANAGEMENT PROJECT

Fernald Environmental Restoration Management Corporation
P. O. Box 538704
Cincinnati, Ohio 45253-8704

CONTROL NUMBER: FER-0411 6989
SITE STANDARD OPERATING PROCEDURE
DOCUMENT NO. SSOP-0002
REVISION NO. 5

INITIATING WASTE CHARACTERIZATION ACTIVITIES USING THE MATERIAL EVALUATION FORM (MEF)

SSOP-0002

Effective Date: 02-13-95

AUTHORIZED BY: _____ 1-26-95
D. Ofte, President Date

FERNALD ENVIRONMENTAL MANAGEMENT PROJECT

Fernald Environmental Restoration Management Corporation
P. O. Box 538704
Cincinnati, Ohio 45253-8704

TABLE OF CONTENTS

SECTION	TITLE	PAGE
1.0	PURPOSE	3
2.0	SCOPE	3
3.0	DEFINITIONS	4
4.0	RESPONSIBILITIES	5
5.0	GENERAL	8
6.0	PREREQUISITES	9
7.0	PROCEDURE	9
7.1	INTRODUCTION	9
7.2	COMPLETING THE MATERIAL EVALUATION FORM (MEF)	10
7.3	USING THE MEF TO RE-EVALUATE A WASTE STREAM	10
7.4	COMPLETING THE MEF VERIFICATION FORM	15
7.5	COMPLETING THE MEF CONTAINER INVENTORY ATTACHMENT	18
8.0	APPLICABLE DOCUMENTS	18
8.1	DRIVERS	18
8.2	REFERENCES	21

LIST OF FIGURES

FIGURE	TITLE	PAGE
1	MATERIAL EVALUATION FORM (MEF) - REQUESTOR SECTION	11
2	MATERIAL EVALUATION FORM (MEF) - EVALUATION SECTION	14
3	MATERIAL EVALUATION FORM (MEF) - VERIFICATION FORM	16
4	MATERIAL EVALUATION FORM (MEF) - CONTAINER INVENTORY	19

LIST OF ATTACHMENTS

ATTACHMENT	TITLE	PAGE
A	SAMPLE CHECKLIST	A-1

RECORD OF ISSUE/REVISIONS

DATE	REV. NO	DESCRIPTION AND AUTHORITY
01-11-91	0	Instructions for completing the Material Evaluation form required per Request No. P90-292, initiated by K. Nuhfer.
04-16-91	1	Revised to update form and include steps to allow for an MEF revision per Request No. P91-093, initiated by J. Ogg.
06-20-91	2	Revised to update technical content and form per Request No. P91-235, initiated by R. Henderson.
10-22-91	3	Revised to insert correct form per Request P91-390, initiated by L. Hamblin.
03-29-94	4	Revised to update to current FERMCO requirements and format per Request No. S93-037, initiated by C. S. Waugh. This supersedes and replaces WEMCO Revision 3, dated 10-22-91.
02-13-95	5	Minor revision per Request No. S94-155, initiated by S. McCrotty. This document supersedes SSOP-0002, dated 03-29-94, Rev. 4.

The latest changes to this document are indicated by a "change bar" (▌) in the right margin. Changes are also shaded in the text when needed to help identify changes. Note: Change bars and shading form the previous revision are removed only changes for the latest revision are shown.

1.0 PURPOSE

The Fernald Environmental Management Project (FEMP) Waste Management System provides for appropriate control and management of waste materials from the point of generation, through required interim storage, to final disposition. The functional requirements for this waste management system are established in "driver" documents such as the state and federal hazardous waste rules and negotiated legal agreements (e.g., Stipulated Amendment to the Consent Decree and the Amended Consent Agreement). The FEMP utilizes appropriate document systems, including site and department procedures, to specify activities to satisfy these functional requirements.

All waste managed at the FEMP shall be appropriately characterized to support selection of safe, effective, and least cost management alternatives. This procedure specifies the required activities to initiate waste characterization using the Material Evaluation Form (MEF) and associated generator documentation. A completed MEF establishes a "waste profile" which identifies requirements for managing materials that match the profile. The associated generator documentation (checklists, the MEF Inventory Attachments and the MEF Verification Form) provides a means for relating specifically inventoried material to an established MEF. In order to achieve the most expeditious characterization, it is imperative that the generator contact Waste Characterization (WC) and initiate the MEF **prior to the actual generation of the waste or the start of the project--whenever possible.**

Detailed instructions for using the MEF, the MEF Inventory Attachments, and the MEF Verification Form are provided on the back of each form. They are also included as attachments to this procedure.

2.0 SCOPE

This procedure applies to all waste, containerized and bulk, that is managed by the FEMP Waste Management System. This includes waste generated at the FEMP as well as FEMP-generated waste returned from offsite sources or vendors. FEMP containerized waste management facilities include designated container storage areas as well as container staging areas. FEMP bulk waste management facilities include: tanks, bins, silos, controlled soil stockpiles, the Central Storage Facility (CSF), the Scrap Metal Pad (SMP), the Decontamination Facility Pad (DFP), the Soil and Rubble Pile Cover (SRPC) and other (future) bulk waste management facilities.

2.0 **SCOPE** (cont.)

This procedure is not applicable to site products or excess materials being sold at fair market value to be used for their intended purposes. This procedure is, however, applicable to certain recyclable materials (e.g., certain materials that must be reclaimed prior to reuse). This procedure does not apply to soils returned to their point of excavation or Investigation Derived Waste (IDW) managed at the point of generation with its parent materials. This procedure does apply, however, to excess soils and IDW that require management in the FEMP Waste Management and Inventory Systems.

3.0 **DEFINITIONS**

Checklist(s) - A document applying to a specific container of waste that is used to validate the contents of the container against the physical characterization criteria noted in a completed MEF. Checklist validation is used for high volume, continuously generated wastes such as scrap wood, scrap metal, or scrap light duty vehicles. Checklist validation is controlled by procedure 20-C-625. (Attachment A is a sample checklist.)

Controlled Holding Area - The area designated for holding uncharacterized material (excluding backlog material and material generated from a soil boring activity) for a maximum period of 89 calendar days. Wastes are placed here while awaiting characterization and proper storage.

FEMP Waste Characterization Process - The actions and procedures used to complete the MEF, associated MEF worksheets, and inventory validation documentation.

FEMP Waste Management System - The interaction of physical activities and their associated management facilities as governed by relevant procedures and other documentation that provides for the management of waste materials from the point of generation, through required interim storage, to final disposition.

Generator - A person (or persons) who either directly or indirectly produces a waste stream or supervises/manages projects which produce waste streams requiring waste characterization.

Inventory Validation Documentation - Documents which demonstrate identification and control of waste from the point of generation through characterization and eventually, to final disposition. Within the scope of this procedure, inventory validation allows for the immediate identification of the characterization of any inventoried waste. Verification Form and MEF Inventory Attachment samples are provided in Figures 3 and 4.

3.0 **DEFINITIONS** (cont.)

Material Evaluation Form (MEF) - The FEMP document which identifies unique waste streams. A completed MEF establishes a "waste profile" which identifies requirements for managing materials that match the profile.

MEF Number - A unique identifying numeric string that denotes a waste stream, and its associated waste characterization file.

MEF Verification Form and MEF Container Inventory Attachment - A two-part system of documentation by which discrete material is associated with a specific waste profile documented on an MEF. MEF Verification Form and MEF Container Inventory Attachment shall be used for all wastes generated and containerized.

MEF Worksheets - Forms used by WC personnel to document the basis for decision making which results in the completed Evaluation Section of the MEF. Guidance for completing the worksheets is found in the Waste Characterization Manual.

Re-evaluation Date - Date specified by WC upon which material must be re-evaluated based on waste stream specific factors, generation rates, and waste management practices. At a minimum, continuously generated waste streams must be re-evaluated annually or until sufficient data is collected to justify a longer period between required re-evaluations.

Requestor - Person or persons providing input for the waste characterization system.

Waste - A material that is no longer needed or suitable for its intended use and has been discarded or is intended for discard.

Waste Characterization Manual - A manual that provides an overview of the waste characterization process at the FEMP for external customers (e.g., Nevada Test Site (NTS) or auditors) and provides criteria used by FERMCO's WC activities.

4.0 **RESPONSIBILITIES**

Generator

- Ensuring that the waste stream is characterized in its present generated form. This process begins with submittal of the MEF and concludes upon receipt of the completed MEF and MEF Inventory Attachment.

- Completing the requestor section of the MEF, the requestor section of the MEF Verification Form, and the MEF Inventory Attachment.

4.0 **RESPONSIBILITIES** (cont.)

Generator

- Providing the WC group with all available and relevant information regarding the material which is being evaluated and providing timely response to requests for further information.

- Requesting re-evaluation of a waste stream when the waste stream has changed in composition or when the generating process has changed.

- Arranging for transfer of material to the controlled holding area if necessary (e.g., when waste is generated and requires temporary storage prior to characterization or sampling if required.)

  NOTE: Material may be transferred to the Controlled Holding Area only when sampling and analysis has been requested or when otherwise specified. See SSOP-0008, "Preparing and Transferring Uncharacterized Waste to the Controlled Holding Area."

- For containerized wastes, obtaining complete inventory information, (full 15 digit lot code and drum number, inventory number or container serial number) prior to initiating actions to transfer waste to site management facilities.

- Ensuring that generated wastes are managed in a safe and compliant manner either through the transfer of the waste to appropriate designated storage areas or through pre-designated management methods at the location of generation.

- Maintaining a copy of the completed MEF, MEF Verification Forms, and the MEF Inventory Attachments associated with the waste.

Waste Characterization Personnel

- Maintaining a listing of sequential MEF numbers to be used by the facility to identify waste streams and their associated characterization documentation. MEF numbers are to be provided to generators upon request. However, until the generator submits a completed MEF, the MEF remains on an inactive status with WC.

- Verifying that an MC&A Inventory exists for the material which has been represented to WC on the submitted MEF form.

- Performing necessary actions in compliance with applicable Federal and State regulations, the Waste Analysis Plan and Waste Characterization Manual in order to fully characterize materials documented in the Generator section of each MEF.

4.0 **RESPONSIBILITIES** (cont.)

Waste Characterization (WC) Personnel

- Responding to inquiries regarding the use and completion of the MEF.
- Notifying generators of requirements for re-evaluation of continuous or periodically generated waste streams.
- Maintaining a waste characterization file of the original of each MEF as a part of the FEMP Operating Record.
- Maintaining a waste characterization database which at a minimum provides a summary of information contained in the characterization files and provides a means of tracking required actions to complete waste characterizations.
- Identifying, at any time during the characterization process, unique or previously undocumented health and safety issues related to a specific waste. When identified, forward to Environmental Safety and Health (ES&H) copies of relevant information pertaining to the waste along with a Health and Safety Addendum for completion.
- Distributing copies of the completed MEF paperwork per the distribution noted on the form. This includes the generator who required a copy of the completed MEF in order to gain admittance to a warehouse.
- Maintaining a list of personnel authorized to sign part D of the evaluation section of the MEF and Section C of the Verification Request Form. Changes to this list shall be forwarded per the general distribution shown on the MEF.
- Providing assistance to generators in identifying appropriate MEFs for verification of additionally generated waste inventory. Evaluation of verification forms shall be completed within five (5) working days following their receipt by WC.

Materials Control and Accountability (MC&A)

- Maintaining the site-wide RCRA and All Materials Inventories with the corresponding inventory information for each container documented on the MEF Verification Form and associated MEF Inventory Attachments or Checklists.

4.0 **RESPONSIBILITIES** (cont.)

Materials Control and Accountability (MC&A)

- Providing generators with FEMP lot codes, container numbers and (optionally) inventory numbers for generated wastes when requested.
- Notifying Waste Characterization of discrepancies in the site-wide waste inventories which require assistance to resolve.

Environmental Safety and Health (ES&H) - Providing concurrence on non-radioactive waste classification of materials when required.

Regulatory Programs - Providing regulatory policy guidance/concurrence relative to waste classification of materials when required.

Hazardous Waste Compliance - Maintaining the official site RCRA Operating Record in accordance with all applicable federal and state regulations.

5.0 **GENERAL**

Waste Characterization (WC) maintains a list of the principle technical contacts for each CERCLA/RCRA Unit (CRU). These representatives have been designated as the primary interface between CRU activities and characterization functions within the Waste Management system. When initiating a waste characterization activity, the generators should first contact their respective CRU representative in Waste Characterization.

The generator may also contact WC either in person or at 738-9353 to obtain an MEF number of each waste stream generated or for use of the Verification Form (see the instructions on the back of each form). At this time the generator will be asked to provide a brief description of the waste, the generating organization, generator point of contact, and a cost account charge number to be used for all activities which are required to characterize the waste.

5.0 **GENERAL** (cont.)

Blank forms may be obtained from Waste Characterization. Forms may be copied for the sake of expediency; however, **the user of the form must exercise caution to insure that copies are legible and centered, and contain all required information.** This information includes the instructions on the reverse side of each page. Waste Characterization will **not** accept forms judged to be of insufficient quality to be placed in the site's operating record. Corrections must be made by striking out incorrect entries with a single line, then initialing and dating the correction. Do not use "liquid paper" or "white out" to make corrections.

For wastes which currently exist, all applicable forms must be submitted immediately. For wastes not yet generated, generators are required to forward applicable forms (discussed below) to Waste Characterization within 30 days of requesting the MEF number. Waste Characterization will cancel MEF numbers for which the generator submittals have not been received within this time.

Generators may contact Waste Characterization at 738-9353 if assistance is required in completing the necessary forms.

6.0 **PREREQUISITES**

None

7.0 **PROCEDURE**

7.1 INTRODUCTION

The Material Evaluation Form (MEF) is not only the document by which generators identify materials which require characterization, but also the document on which the Waste Characterization staff records the summary of those characterization efforts. The MEF does **not** reproduce or duplicate the delineation of specific waste as identified in the site inventory system; rather, it maps to a particular waste stream which is uniquely identified via the MEF number. Specific inventories of materials are assigned to a particular MEF using the MEF Verification Form and the Inventory Identification Attachment.

7.2 COMPLETING THE MATERIAL EVALUATION FORM (MEF)

GENERATOR

NOTE: Incomplete entries will not be accepted. "None", "Unknown", and "N/A" (Not Applicable) may be used when appropriate.

1. Obtain the correct MEF form (Figure 1) and an MEF Number from Waste Characterization. Once this procedure is finalized, only the new forms (attached) will be accepted for use--except in those cases in which the generator has as MEF characterization in process using the old forms.

2. Complete each item in the requestor section of the MEF in accordance with the directions provided in Figure 1, Sheet 3 of 3. The directions are also found on the reverse side of each page of the requestor section of the MEF.

3. If there is not sufficient space on the form, prepare an attachment sheet noting the MEF number at the top of sheet.

4. Upon completion of the MEF, attach all relevant information concerning the material (e.g., SOPs, analytical results, narrative describing generating process, etc.) and forward to Waste Characterization for completion.

5. Maintain a copy of the MEF in requestor's files, including the evaluation section (Figure 2) when completed by Waste Characterization.

7.3 USING THE MEF TO RE-EVALUATE A WASTE STREAM

GENERATOR

1. Determine that a revision to the MEF is required due to changes in the composition of the waste or to changes in the generating process.

2. Complete requestor section of the MEF. The MEF number is the same as the original. Indicate "revision" next to the MEF number.

Fernald Environmental Management Project
MATERIAL EVALUATION FORM (MEF)

Requestor Section

page 1 of 2

A. REQUESTOR/WASTE STREAM IDENTIFICATION

1. MEF#: Original: _____ Revision: _____	2. Date Submitted:	3. Material Type and Source Code:
4. Requestor Name:	5. Phone No.:	6. Badge No./Co. Name:

B. GENERATION INFORMATION

1. Provide best descriptive name for material:	2. Does this material originate in a HWMU or SWMU? Unit Name/No.		3. Project, Activity, or Work Area generating waste (include CRU # if applicable).
4. Date of first or expected generation: ☐ estimate; ☐ actual _____	5. Generation Quantity:	6. Generation frequency:	7. Similar waste stream MEF# (or MTC/ERC):

8. Provide a detailed description of what the material is:

9. Provide a detailed description of how and where (specific origin) the waste stream is/will be generated, including any units which manage the material:

[Note: Generator must attach all supporting documentation concerning items 8 and 9.] ○ additional narrative; ○ SOP;

○ MSDS; ○ AEDO Log excerpt; ○ release report; ○ manufacturing spec; ○ Other: _____

FORM GEN.MEF, Revision 2.2, 02/04/94 wcpforms\gen.frl

Figure 1 - Material Evaluation Form (MEF) Sheet 1 of 3

Fernald Environmental Management Project
MATERIAL EVALUATION FORM (MEF)

Requestor Section

page 2 of 2

C. PHYSICAL CHARACTERISTICS

1. Describe Color/Appearance:

2. Phase:
☐ Liquid ☐ Solid debris/rubble
☐ Semi-solid/sludge ☐ Dry solid residue
☐ dry powder/dusty residue ☐ Other, specify:

3. Contains Free Liquids:
☐ yes ☐ no ☐ unknown
based on:
○ PFLT (results attached)
○ Visuals (results attached)
☐ Knowledge of waste

[NOTE: DO NOT SMELL THE MATERIAL]
4. Note Any Incidental Odor:

5. Layers:
☐ single layer
☐ bi-layered
☐ multi-layered

6. pH: specify range or "unknown"
_____
☐ estimate; ○ documentation attached

7. Flash Point: Specify range or "unknown"
_____
☐ estimate; ○ documentation attached

D. MATERIAL COMPOSITION

1. Composition:

	Min	Max:	circle
_____	____	____	% (or) ppm
_____	____	____	% (or) ppm
_____	____	____	% (or) ppm
_____	____	____	% (or) ppm
_____	____	____	% (or) ppm
_____	____	____	% (or) ppm
_____	____	____	% (or) ppm
_____	____	____	% (or) ppm
_____	____	____	% (or) ppm

Total Maximum: ____ %
maximum must equal or exceed 100 %

Basis:
☐ knowledge of the material
○ analytical data attached.

2. Does the material contain any of the following?
☐ asbestos ☐ polychlorinated biphenyls (PCBs)
☐ infectious waste
☐ reactives (circle applicable items):
water reactive — explosive
cyanide/sulfide — shock sensitive
normally unstable
exclude materials which normally produce hydrogen gas.
☐ toxicity characteristic metals (circle applicable items):
arsenic — barium
cadmium — chromium
lead — mercury
nickel — selenium
silver — thallium
(or)
☐ None of the above
(or)
☐ Unknown

Basis:
☐ knowledge of the material
○ analytical data (attached)

3. Radionuclide Contamination:
☐ material is not contaminated with radionuclides
☐ material contains incidental radionuclide contamination
☐ radionuclide bearing material/residue

Radionuclides of Concern if any:
☐ uranium
☐ thorium
☐ transuranics (TRU)

Basis:
☐ knowledge of the material ☐ RMMA generated
○ analytical data attached ☐ Other: _____

4. Identify the container or repository type(s) in which the waste is (or is expected to be) managed on-site:
☐ drum ☐ box
☐ Sea/Land ☐ soil/debris pile
☐ small container (5 gal. or less)
☐ landfill, pit, or other land-based unit
☐ discharge to WWTS

FORM GEN.PRT, Revision 2.2, 02/04/94 wcpforms\gen.frt

Figure 1 - Material Evaluation Form (MEF) Sheet 2 of 3

Instructions to Generators for Completing the Material Evaluation Form (MEF), Requestor Section

The Waste Characterization Section is responsible for providing characterization for all wastes generated by FEMP personnel/activities. However, it is the individual generator's responsibility to ensure that his/her waste is properly characterized in its present form.

The Material Evaluation Form (MEF) is the document by which generator identify material which requires characterization and on which the Waste Characterization group summarizes the results of the characterization effort. The MEF does not delineate specific waste as identified in the site inventory system, but refers only to the characteristics of a particular waste stream (identified by MEF #). Specific inventoried material is assigned to a particular using the MEF Verification Request Form and Inventory Identification Attachment.

The following directions have been developed to assist in the completion of the generator's section of the MEF. Each block of the form must be completed for MEF to be accepted. Use of 'None' or 'N/A' is acceptable when appropriate. Checkbox items shown with a "O" require attached documentation. Upon completion of this form submit to Waste Characterization at MS # 46. [Note MEFs will not be accepted with incomplete information or lacking documentation (e.g. MSDS, release report, etc)].

PART A: GENERATOR/WASTE STREAM IDENTIFICATION

1. MEF #: Enter number of the form as received from Waste Characterization (x9353). Check whether this submittal is original or a revision to an existing MEF as appropriate.
2. Date Submitted: Enter the date the form is submitted to Waste Characterization.
3. Lot Marking Code: Enter first the Material Type then the Source Code assigned to the waste if this information is known. Contact Materials Control and Accountability (MC&A), x6275, for assistance in determining this information. Enter "Unknown" if applicable.
4. Generator Name: provide First Name, Last Name and Middle Initial.

5-6. Badge No./Co. Name/Phone No: Self Explanatory

PART B: GENERATION INFORMATION

1. Name: Provide the best descriptive name for the material (e.g. spent acetone, dust collector residues, soil borings, purge water etc.)
2. HWMU: If the material originates from a Hazardous Waste Management Unit please provide unit name and #. If you are unsure please consult your supervisor, Waste Characterization or cognizant CRU representative for assistance.
3. Self-explanatory.
4. Self-explanatory. Always provide at least an estimate. If the waste is "backlogged" or has otherwise already been generated, provide the historical date of generation as an actual date. This information may usually be obtained from existing records or from MC&A. "Unknown" is not acceptable.
5. Generation Quantity: Enter the amount and unit of waste to be generated (i.e. 50 gal). This is generally the amount of waste in a container (or a multiple thereof). If the generation event is one-time only, enter the total amount of waste.
6. Quantity/Frequency: Enter a time period (week, year etc.) during which the amount specified in item 5 will be generated, or "one-time" as appropriate.
7. Similar waste stream: Enter MEF # or Material Type/Source Code for a similar waste stream if known. Otherwise "N/A".
8. Description: Provide a clear concise description of what the waste stream actually is (e.g., residues from dust collector servicing). Include all components of the waste stream and any relevant information concerning packaging, absorbents etc. Be as detailed as possible. *DO NOT REPEAT THE DESCRIPTION CORRESPONDING TO THE MATERIAL TYPE CODE.*
9. Description of Generation: Provide a detailed description of how the waste stream is/will be generated. Include specific process involved, history of waste etc. For containerized wastes include packaging information (e.g. labpacked, packed with absorbent materials) Check and include all relevant supporting documentation (e.g. MSDS, SOP, Manufacturing Specification, Release Reports etc.).

PART C: PHYSICAL CHARACTERISTICS

1. Color/Appearance: Be as detailed as space will allow. What does the waste look like?
2. Phases: Check all that are present in the waste.
3. Free Liquids: If yes, check a "based on" criteria.
4. Odor: DO NOT SMELL THE WASTE! If the waste has a known incidental odor, then describe the odor (e.g., acrid, pungent, solvent, sweet).
5. Layers: Check appropriate box. Single layer means the waste has no distinct separation or layers (e.g., water, or oil, or semi-solid). Bi-layered means the waste is comprised of two distinct layers (e.g., water/dirt or oil/solids). Multilayered means more than two distinct layers (e.g., oil/water/semi-solid).
6. pH: If the waste contains aqueous free liquids, list the range of pH if known. If the pH is not known mark "not known" in the blank. If a pH range is entered, check the basis for the range. Documentation may consist of analytical data, MSDS, or pH paper results. For non-aqueous wastes enter N/A.
7. Flash Point: If the waste contains free liquids list the range of its flash point if known, if the flash point is not known, mark "not known" in the blank. If a flash point range is entered, check the basis for the range. Documentation may consist of analytical data or MSDS.

PART D: MATERIAL COMPOSITION

1. Composition: List all components which make up the waste stream along with the range of the approximate volume in percent or parts per million. Circle the unit (% or ppm) used for each component. Use ppm only if less than 10,000. Assume a value of 1% for any component given in ppm when calculating the "Total Maximum". If only partial knowledge of the components in the waste stream is available, list those components and provide the approximate percentage of the waste which is unknown. Provide basis for the components in this section.
2. Waste Characteristics: Check each box which applies to the waste. Circle items as appropriate. Do not document items "suspected" of being present in the waste. These should be noted in block B8.
   None of the above - Check this when no entries above apply.
   Not Known - Check this when adequate information is not available to answer the questions above.
   Basis - Check the appropriate box when specific items above are checked.
3. Radionuclide contamination: Indicate radionuclide contamination status of the material. If analytical data is available please attach to form. Contact RS&T for information on radionuclide contamination of materials onsite. Indicate the basis for the checked item. Material Accounting information may be attached as analytical data.

Figure 1 - Material Evaluation Form (MEF) Sheet 3 of 3

Fernald Environmental Management Project
MATERIAL EVALUATION FORM (MEF)

Evaluation Section

A. WASTE STREAM IDENTIFICATION

1. MEF #: Revision No.:	2. Date Completed:	3. Material Type / Source Code of original material: Mat. Sou.
4. Evaluator:	5. Phone No.:	6. Badge No./Co. Name:

B. MATERIAL REGULATORY STATUS (check all that apply)

Regulated:	Material Specific Regulation:	Regulated:	Material Specific Regulation:
___ yes ___ no	TSCA PCB Waste	___ yes ___ no	High Level Radioactive Waste
___ yes ___ no	Asbestos Containing-Waste Materials	___ yes ___ no	Transuranic (TRU) Waste
___ yes ___ no	OAC Infectious waste	___ yes ___ no	AEA 11(e)(2) Byproduct Material
___ yes ___ no	OAC Solid Waste (RCRA Subtitle D)	___ yes ___ no	Source (or) Special Nuclear Material
___ yes ___ no	RCRA Solid Waste (RCRA Subtitle C)	___ yes ___ no	Low Level Radioactive Waste (LLRW).
___ yes ___ no	RCRA Hazardous Waste	___ yes ___ no	Non-Radioactive waste. ***

Hazardous Waste Code(s): _____

*** Concurrence, Radiological Assessment- Date: _____

Re-evaluation Date: _____

Note: Waste stream must be re-evaluated by WCS if it is generated after the re-evaluation date listed above or when the stream/generating process changes.

C. MATERIAL MANAGEMENT

1. Waste Form Criteria:	2. Container Specification:	3. Reactivity Group Code(s):
___ yes ___ no Material contains free liquids.		
___ yes ___ no Material is a wastewater. (40 CFR 268.2(f)).		
___ yes ___ no Material meets physical definition of debris (40 CFR 268.2(g)).		
___ yes ___ no Waste meets NVO-325 Waste Acceptance Criteria (See NTS Waste Acceptance Criteria in MEF file).		

D. WASTE CHARACTERIZATION APPROVAL

Name: _____ Signature: _____

E. DISTRIBUTION

___ Generator	_____	___ HW/MW Handling and Disposition	_____
___ MCAA	_____	___ LLW Handling and Disposal	_____
___ Waste Treatment and Storage	_____	___ Waste Characterization Files	
___ Sample Disposition (if sampled)	_____	___ Other _____	_____

FORM EVAL.PRI, Revision 2.4, 02/04/94 wcpformeval.fri

Figure 2 - Material Evaluation Form (MEF) - Evaluation Section

7.3 USING THE MATERIAL EVALUATION FORM (MEF) TO RE-EVALUATE A WASTE STREAM (cont.)

3. Upon completion of the MEF attach all relevant information concerning the material (e.g., SOPs, analytical results, additional narrative describing generating process, etc.) and forward to WC for completion.

4. Maintain a copy of the MEF revision in requestor's files.

7.4 COMPLETING THE MEF VERIFICATION FORM

NOTE: The MEF Verification Form is submitted whenever there is physically identifiable waste that is to be associated with a particular MEF. It may be submitted with the original MEF if the waste has already been generated, or after characterization is completed if the generator's intent is to characterize before generating. It is also submitted when additional waste is generated; or in the case of backlogged production wastes, when additional waste is identified which is believed to match an existing waste profile. **The Verification Form is always submitted with an Inventory Attachment.**

WASTE CHARACTERIZATION

1. Completing the MEF Verification Form and distributing it to the generator within five (5) working days.

GENERATOR

2. Obtain the MEF Verification Form from WC. (Example provided in Figure 3.)

3. Complete each item in the requestor section in accordance with the directions provided in Figure 3. These directions are also provided on the reverse side of the form.

4. Upon completion of the Verification Form, attach all relevant information concerning the material (e.g., SOPs, analytical results, additional narrative describing generating process, etc.) and forward to Waste Characterization for completion.

5. Maintain a copy of the Verification Request in requestor's file.

Fernald Environmental Management Project
MATERIAL EVALUATION FORM (MEF)

Verification Form

A. WASTE STREAM IDENTIFICATION

1. Requestor:	2. Phone:	3. Serial Number:
4. Generation Event: ☐ Original Generation ☐ Additional Generation ☐ Safe Shutdown Generation ☐ Other (Describe):		5. Date Submitted: (see instruction note!)
6. Material Description:		
7. Process Description: ○ Documentation Attached		
8. Generation Location:		

B. WASTE STREAM TO VERIFY AGAINST

1. MEF#:	2. Material Description:	
3. Determination Date:	4. Determination:	5. Hazardous Waste No(s).
6. Rationale: ○ Extra page(s) attached		

Evaluation Section

C. MATERIAL STATUS

1. Evaluator:	2. Date:
3. Summary ☐ Material is characterized by MEF # _____. Inventory is revised to include the inventory shown on the associated inventory attachment.	Material Determination: ☐ RCRA Solid Waste (a.k.a Non-RCRA) ☐ RCRA Hazardous Waste Hazardous Waste No(s).
☐ This material does not match the characterization of the referenced MEF. Submit a new MEF for this material immediately.	
Rationale:	
Waste Characterization Approval Signature: _____ Date: _____	

D. DISTRIBUTION

Requestor:	Waste Characterization File:

FORM VER.PRT, Revision 2.1, 01/14/94 wcplormver.frt

Figure 3 - Material Evaluation Form (MEF) - Verification Form (Sheet 1 of 2)

Instructions to Generators for Completing the MEF Verification Form

The Waste Characterization Section is responsible for providing characterization for all wastes generated by FEMP personnel/activities. However, it is the individual generator's responsibility to ensure that his/her waste is properly characterized in its present form.

The MEF Verification Form must be used whenever there exists discrete waste material which must be associated with a specific waste profile documented on an MEF. This form is accompanied by an MEF Container Inventory Attachment when the discrete waste is containerized. Use of the MEF Verification Form streamlines the characterization process by providing a means of associating uncharacterized waste materials with an existing waste profile documented on an MEF. This eliminates the need to produce a new MEF for each and every generation event. The MEF Container Inventory Attachment then provides the means of associating specific containers (inventory) with a waste profile documented on an MEF. Data quality objectives are the same as for any characterization. The Waste Characterization group may be contacted to determine if any appropriate MEF exists against which a waste may be verified. The information provided by the requestor on this form must show sufficient process control, and/or documentation of waste matrix and constituents to verify that the waste meets the profile specified on the referenced MEF. The Waste Characterization group may request additional visual inspections and/or sampling to confirm the match.

The completed MEF Inventory Attachments along with the parent MEF serve as the characterization documentation required to received waste into a site waste management facility (including the controlled holding area). This documentation provides the key data link for associating MC&A inventory information with waste characterization information (i.e., provides a means for identifying an MEF number for each item in inventory). The following directions have been developed to assist in the completion of the Requestor's section of this form. Please note that each block of the form must be completed in order for form to be accepted. Use of 'None' or 'N/A' is acceptable when appropriate. Do not leave any blocks in the requestor section blank. When the MEF Verification Form is completed, attach the necessary Inventory Identification Attachments and forward to Waste Characterization at MS # 46.

PART A: WASTE STREAM IDENTIFICATION

1. **Requestor:** Provide First Name, Last Name, and Middle Initial.
2. **Phone:** Self Explanatory
3. **Serial Number:** This is a unique four digit alpha-numeric string assigned by Waste Characterization. Examples: "1001"; "SS01". When approved, the Verification Form will be identified as "MEF#-Serial#". Examples: 1978-1001; 20001-SS01. Contact WCS at extension 9353 to obtain this number.
4. **Generation Event:** Check the appropriate item:
   - Original Generation: First quantity of material generated for which MEF was originally submitted
   - Additional Generation: Additional material generated which meets the MEF profile
   - Safe Shutdown Generation: Material generated by Safe Shutdown programs
5. **Date Submitted:** Self explanatory. NOTE: for original generation materials, complete item B1 with MEF number and fill in all remaining requestor section boxes with "N/A".
6. **Material Description:** Provide a clear concise description of what the waste stream actually is (e.g., residues from dust collector servicing). Include all components of the waste stream and any relevant information concerning packaging. DO NOT REPEAT THE DESCRIPTION CORRESPONDING TO THE MATERIAL TYPE CODE.
7. **Process Description:** Provide a clear and concise description of the process generating the waste. The process description and attached documentation (if included) must be of sufficient detail to provide the evaluator in the Waste Characterization Group with enough information to verify that the waste corresponds to the characterization described in the MEF. In general, attached documentation will be required. Examples include project logbooks, AEDO spill reports, Satellite Accumulation Area (SAA) container records, SOPs, analysis data etc. Waste characterization may request additional visual inspections or sampling in order to verify inventory with an existing MEF characterization.
8. **Generation Location:** Be as specific as possible.

PART B: WASTE STREAM TO VERIFY AGAINST

1. **MEF#:** Enter the Material Evaluation Form # of the waste stream against which the material is to be verified.
2. **Material Description:** Enter the material description as found on the Waste Characterization database or MEF.
3. **Determination Date:** Enter the Determination date from the WC Database or the MEF Evaluation Section.
4. **Determination:** Enter the determination from the WC Database or the MEF Evaluation Section (e.g., RCRA Hazardous, Non-RCRA (a.k.a. Non-Hazardous) etc.)
5. **Hazardous Waste No(s).** Enter the Hazardous waste No(s). if applicable.
6. **Rationale:** Indicate your reason for believing the waste described in section A is characterized by the MEF described in section B. Please provide thorough and detailed explanations (use additional sheets if required).

PARTS C & D: ***TO BE COMPLETED BY WASTE CHARACTERIZATION***

Figure 3 - Material Evaluation Form (MEF) - Verification Form (Sheet 2 of 2)

7.5 COMPLETING THE MEF CONTAINER INVENTORY ATTACHMENT

GENERATOR

1. Obtain the Inventory Identification Attachment from Waste Characterization. (Example provided in Figure 4.) The Inventory Identification Attachment is always submitted in conjunction with the original MEF or an MEF Verification Request Form.

2. Complete each item in Sections A and D in accordance with the directions provided in Figure 4. These directions are also provided on the reverse side of the form.

3. Attach the Inventory Identification Attachment to the MEF Verification Form and forward to Waste Characterization at MS-46.

4. Maintain a copy of the Inventory Identification Attachment in requestor's files.

8.0 APPLICABLE DOCUMENTS

8.1 DRIVERS

- DOE Order 5820.2A, "Radioactive Waste Management"
- 40 CFR 61, Subpart M, "Protection of the Environment/Asbestos Regulations"
- 40 CFR 261-272, "Protection of the Environment/Solid Wastes"
- 40 CFR 761, "Protection of the Environment/Toxic Substance Control Act (TSCA)-PCB"
- Amended Consent Agreement (ACA)
- FEMP Part B Permit Application - Waste Analysis Plan

Fernald Environmental Management Project
MATERIAL EVALUATION FORM (MEF)

Container Inventory Attachment Page____ of ____

A. GENERAL INFORMATION:

1. MEF #: Verification Serial #:	2. Date Completed:	3. Completed by:

4. Special Notes: (a) TOTAL NUMBER OF CONTAINERS EQUALS TOTAL IN LOT UNLESS INDIVIDUAL CONTAINERS SPECIFIED.
(b)
(c)

5. Key on Inventory Container Type:
DM = Drum or Over-Pack Drum; SL = Sea-Land; TK = Tank; SM = small container (≤ 5 gal);
MC = Miscellaneous Container; WB = Wood Box; WM = White Metal Box.

B. APPROVAL:

Waste Characterization Name: _____ Signature: _____

C. DISTRIBUTION:

Requestor:	Waste Storage:
Materials Control and Accountability:	Waste Characterization Files:

D. INVENTORY COUNT BY CONTAINER

ITEM No.	LOT CODE IDENTIFICATION:	Total Number of Containers	Type of Container	Individual Container Identifications (if required)

FORM ENV-PR1, Revision 2.1, 02/04/94 wcplormenv.fr1

Figure 4 - Material Evaluation Form (MEF) - Container Inventory Attachment (Sheet 1 of 2)

Instructions to Generators for Completing the MEF Container Inventory Attachment

The Waste Characterization Section is responsible for providing characterization for all wastes generated by FEMP personnel/activities. However, it is the individual generator's responsibility to ensure that his/her waste is properly characterized in its present form.

The MEF Inventory Attachment (this form) is submitted in conjunction with the MEF Verification Form. These documents are used whenever there exists quantifiable waste material which must be associated with a particular waste stream profile documented on an MEF (see section 7.3 of SSOP-0002 for applications). When completed by both the requestor and Waste Characterization, this form serves as the documentation by which the waste is received at a site waste management unit (including the controlled holding area). It also serves as the means for inputting the status of characterization (documented on the MEF) into the site's waste inventory system.

The following directions have been developed to assist in the completion this form by generators. Attach this form to the completed MEF Verification Form and forward to Waste Characterization at MS # 46.

PART A: GENERAL INFORMATION

Upper right: Page __ of __: Complete as appropriate.

1. MEF #: Enter the MEF number from the MEF Verification Form
   Serial Number: Enter the Verification serial number from Block 1 of the associated Verification Form. Contact WCS at x9353 to obtain this number
2. Date Completed: Self-explanatory.
3. Completed by: The name of the person completing Parts "A" and "D" of this form.
4. Special Notes: Note any special identifying information. Material being received from offsite should be noted here.

PARTS B AND C: FOR USE BY WASTE CHARACTERIZATION ONLY

PART D: INVENTORY COUNT BY CONTAINER

Item No. This is a line item number. Start with "1" and number consecutively for each line completed.
Lot Code Information: Enter the 15 digit lot code obtained from MCAA (see section 4.0 of SSOP-0002). Do not enter only a material type and source code.
Total Number of Containers: Enter either the total number of containers in the lot or "1" as appropriate. The use of "1" signifies that not all containers in the lot are applicable. A "1" requires an entry in the "Individual Container Identification" column.
Type of Container: Enter the appropriate code from block A-5.
Individual Container ID: Enter the drum number, inventory number, or container serial number if the "Total Number of Containers" is 1. Otherwise enter "Note 4a" to signify that the total represents all containers in the lot.

Figure 4 - Material Evaluation Form (MEF) - Container Inventory Attachment (Sheet 2 of 2)

8.0 **APPLICABLE DOCUMENTS** (cont.)

8.1 DRIVERS (cont.)

- FEMP Sitewide CERCLA Quality Assurance Project Plan (SCQ)
- Nevada Test Site Defense Waste Acceptance Criteria, Certification, and Transfer Requirements (NVO-325-Rev. 1), June 1992 (Rev. 1)
- Ohio Administrative Code (OAC) 3745-20, "Asbestos Regulations"
- Ohio Administrative Code (OAC) 3745-51 to 69, "Hazardous Waste Regulations"
- Stipulated Amendment to the Consent Decree (SACD)

8.2 REFERENCES

- Waste Characterization Manual (Department Document)
- FEMP RCRA Part B Permit Application - Waste Analysis Plan
- FEMP Sitewide CERCLA Quality Assurance Project Plan (SCQ)
- SOP 20-C-625, "Evaluating Low Level Radioactive Waste (LLRW) Bulk Waste Streams for Shipment"
- SSOP-0008, "Preparing and Transferring Uncharacterized Waste to the Controlled Holding Area"
- Revised FMPC Waste Determination Plan, September 20, 1990

ATTACHMENT A

6989

SAMPLE CHECKLIST

FEMP

Reference MEF # 905

LOW-LEVEL RADIOACTIVE WASTE

MATERIALS EVALUATION AND CONTAINER INFORMATION - WOOD

SECTION I

WASTE EVALUATION	YES	NO	N/A
1. Treated: a. Material free from creosote treatment			
2. Residues: a. Free from process or waste residues			
3. Stains: a. Stains cover less than 10% of wood surface *or* Stain covers more than 10% of wood surface caused by green salt, black oxide, white salt, or orange oxide.			
4. Paint: a. Free from lead-based paint *or* Paint covers less than 10% of material			
5. Plastic/Rubber: a. Material consists of less than 20% by volumes other materials and does not contain any oil, solid residues, or entrapped liquids (e.g. plastic or rubber parts/hardware)			
6. Metal: a. Metal constitutes more than 10% by volume (If yes, then metals checklist (FS-F—3464) must also be used.)			

SECTION II - CONTAINER INFORMATION

1. MATERIAL ORIGIN/DESCRIPTION:

2. PACKAGING START DATE | PACKAGING FINISH DATE:

3. OPERATOR(S) SIGNATURE: | DATE:

4. CONTAINER NUMBER:

5. CONTAINER TYPE: ☐ S/L ☐ WHITE METAL BOX

6. 65 CARD NUMBER:

7. LOCATION PACKAGED:

8. * MEF NUMBER:

9. % COMBUSTIBLE:

APPROVED BY: SUPERVISOR(S) SIGNATURE/DATE

APPROVED BY: QA SIGNATURE/DATE

* When materials are packaged that do not meet the criteria established in Section I, but have an approved MEF number, the MEF number and material must be recorded.

GENERATOR TO MAKE DISTRIBUTION:		
1	Original to Facilities and Material Evaluation	MS65
2	Copy to Waste Shipping	MS63
3	Copy to Environmental Compliance	MS65
4	Copy to Materials Control and Accountability	MS28

FS-F-3465 (REV. 4/7/92)

NON-CONTROLLED COPY

TABLE OF CONTENTS

1.0 PURPOSE 2

2.0 SCOPE 2

3.0 APPLICABLE DOCUMENTS 2
- 3.1 Source Documents 2
- 3.2 Reference Documents 2

4.0 DEFINITIONS 3

5.0 RESPONSIBILITIES 4

6.0 GENERAL 5

7.0 HEALTH AND SAFETY REQUIREMENTS 6

8.0 PROCEDURE 8
- 8.1 Preparation for Sampling 8
- 8.2 Sampling 11
- 8.3 Collection of Solid Matrix Samples 12
- 8.4 Collection of Liquid Matrix Samples 13
- 8.5 Equipment Decontamination 14
- 8.6 Equipment Rinsate Blanks 15
- 8.7 Duplicate Samples 15
- 8.8 Split Samples 16
- 8.9 Container Blanks 16
- 8.10 Preservative Blanks 17
- 8.11 Solid-Matrix Concentrated Waste Sample Handling and Storage . . . 17
- 8.12 Low/Medium Concentration Liquid-Matrix Sample Handling and Storage 18
- 8.13 Liquid-Matrix Concentrated Waste Sample Handling and Storage 19
- 8.14 Completion of Site-Wide Analysis Request/Custody Record (SWAR/CR) 19

RECORD OF ISSUE/REVISIONS 35

LIST OF TABLES

Table 1 - Field Quality Control Samples . . . . . .
Table 2 - Preservative Parameters For Samples . . . . . .

LIST OF FIGURES

Figure 1 - Variance Request 23
Figure 2 - Sample Labels 24
Figure 3 - Site-Wide Analysis Request/Custody Record 25
Figure 4 - Sample Log Book 26
Figure 5 - Tamper Proof Seal 27
Figure 6 - Clean Equipment Tag 28
Figure 7 - Waste Sampling Decon Log 29

LIST OF ATTACHMENTS

Attachment A - Drummed Waste Material PSAP 30

6989

1.0 PURPOSE

The purpose of this document is to establish the procedure for sampling waste materials contained in 5 to 10 gallon cans and 30, 55, 85 or 110 gallon drums.

2.0 SCOPE

This procedure is applicable to taking samples of waste material contained within drums/cans to support waste characterization programs.

3.0 APPLICABLE DOCUMENTS

3.1 Source Documents

3.1.1 FEMP Site-Wide CERCLA Quality Assurance Project Plan (SCQ).

3.1.2 DOE Order 5820.2A, "Radioactive Waste Management".

3.1.3 NVO-325, Rev. 1, Nevada Test Site Defense Waste Acceptance Criteria, Certification, and Transfer Requirements, June 1992.

3.1.4 Material Acceptance Process Manual, Envirocare Inc. of Utah.

3.1.5 Proposed Amended Consent Decree with OEPA.

3.1.6 D10-00-020, "Remediation Support Operations Division Document System"

3.1.7 RM-0012, "Quality Assurance Program Description"

3.2 Reference Documents

3.2.1 EPA SW-846, Test Methods for Evaluating Solid Waste

3.2.2 RM-0005, "FEMP Lot Marking and Color Coding System"

3.2.3 SMS-93-290, Prototype Sampling and Analysis Plan for Containerized Wastes at the FEMP. (Site document number pending).

3.2.4 20-C-602, "Inspection and Operation of NILFISK Portable Vacuum Units"

3.2.5 20-C-909, "Portable Ventilation Unit Operation"

3.2.6 20-C-912, "Checking Scale Operation"

3.2.7 SSOP-0018, "Processing Site-Wide Analysis Request/Custody Record for Sample Control"

3.2.8 SSOP-0035, "Satellite Accumulation Areas and Interim Containers for Hazardous Wastes"

3.2.9 M-107, "Transportation Requirements for Shipment of Samples to Off-Site Laboratories"

4.0 DEFINITIONS

4.1 Composite Sample - A sample collected for representation of large was streams and prepared by combining equal portions of materials obtaine the same waste stream.

4.2 Concentrated Waste - Materials of physical form or characteristics which require non-typical sampling techniques, or contain contaminant concentrations at such a level that sample preservation is not required for sample integrity. Examples of solid-matrix concentrated wastes include paper, trash, metallic structures (sheets, pipes, beams), concrete, wood, etc. Examples of liquid-matrix concentrated wastes include oils solvents, and process liquids.

4.3 Contact Waste - Discarded materials generated during drum/can sampling activities (e.g., used PPE, rags, rinse water).

4.4 Container Blank - A sample used to determine quality and integrity of sample containers. Unpreserved sample containers are submitted to the laboratory. An extract from the container is prepared and analyzed for parameters of interest. Appropriate for Analytical Support Levels (ASLs) B, C, D, and E. (SCQ)

4.5 Field Duplicate - Two independent samples collected from the same source, analyzed separately and used to evaluate precision of analytical laboratory performance and sample collection techniques. Each duplicate sample is assigned an unique identification number and sent as blind samples to the same laboratory. Appropriate for ASLs A through E and required for A and D. (SCQ and EPA-SW-846)

4.6 Equipment Rinsate Samples - A sample used to determine the effectiveness of decontamination procedures; prepared at the decontamination site by collecting a portion of the final rinse of the sampling equipment. Appropriate for ASLs A through E and required for ASLs, C and D. (SCQ)

4.7 Field Blank - A sample used to determine whether the sample collection process or conditions at the site have affected sample quality; prepared by pouring organic-free, distilled/deionized water into appropriate containers for each type of analysis to be conducted. Field blanks are specified for ASLs C and D and some ASL B and E analysis. (SCQ)

4.8 Low/Medium Concentration Liquid Samples - Liquids which contain contaminant concentrations at such levels that sample preservation is required for sample integrity. Examples include containerized purged groundwater, sump liquids, etc. and quality control (QC) samples.

4.9 Meniscus - The convex portion of liquid matrix samples extending above the rim of the sample container.

4.10 Preservative Blank - A sample used to determine the quality of sample preservatives. Prepared by the Sample Coordinator or Field Sampling Team in a controlled environment by pouring organic-free, distilled/deionized water into sample containers with specified preservative. Appropria ASLs B, C, D, and E. (SCQ)

4.0 **DEFINITIONS** (cont.)

4.11 Random Sample - A representative sample of waste material collected from a container chosen from a group of similar containers that had equal probabilities of being selected.

4.12 Sampling Event - Collection of sample(s) in accordance with a single PSAP for a specific project. (SCQ)

4.13 Sample Line(s) - A limited-access, diked area (size: approximately 10 feet by 20 feet) used during drum/can sampling activities. Each sample line contains equipment, supplies, storage cabinets, work benches, hoods and a temporary drum staging area (maximum capacity of four drums).

4.14 Sampling Round - Collection of samples in accordance with one or more PSAPs for a specific project during a specified time period for a similar purpose. (SCQ)

4.15 Split Sample - A sample used to evaluate comparability of analytical data prepared by evenly distributing sample media between two or more sets of containers. Assigned the same identification number as the original sample. The original and the split sample are each shipped to different laboratory facilities for similar analysis. Appropriate for ASLs A through E and required for ASLs C and D. (SCQ)

4.16 Trip Blank - A sample used to determine whether conditions encountered during sample container shipment and handling have affected sample quality; prepared by the sample coordinator in a controlled environment by pouring organic-free, distilled/deionized water into a 40-mL volatile organic analysis vial and sealing it with a teflon-lined septum lid. Trip blanks are required when samples are collected for volatile organic analysis. (SCQ)

5.0 **RESPONSIBILITIES**

5.1 **Supervisors** shall be responsible for the following:

5.1.1 Contacting Industrial Hygiene and/or Radiological Control to determine if the Personal Protective Equipment (PPE) identified on the work permit is appropriate for the process being performed.

5.1.2 Issuing the required PPE to operators.

5.1.3 Ensuring that personnel are qualified per the established training requirements identified by the Department/Staff Manager.

5.1.4 Reviewing applicable Material Safety Data Sheets (MSDS) with operators.

5.1.5 Obtaining and maintaining all permits required for implementation of drum/can sampling activities.

5.1.6 Obtaining and maintaining all documents, policies and procedures applicable to drum/can sampling activities.

5.0 **RESPONSIBILITIES** (cont.)

5.1.7 Obtaining specific drum/can storage location(s) from Materials Control Accountability (MC&A).

5.1.8 Notifying MC&A prior to moving drums/cans.

5.1.9 Notifying the Transportation representative to move the drums/cans to a diked sampling area.

5.1.10 Notifying Radiological Control prior to moving drums/cans in and out of Radiological Zones.

5.2 **Operators** shall be responsible for the following:

5.2.1 Complying with this procedure and applicable documents/permits.

5.2.2 Wearing PPE as provided by the Supervisor.

5.3 **Materials Control and Accountability (MC&A)** shall be responsible for the following:

5.3.1 Assigning a representative to support drum/can movement to, from and within the sampling area.

5.3.2 Providing material identification data.

5.4 **Environmental Safety and Health (ES&H)** shall be responsible for the following:

5.4.1 Monitoring vehicles and drums/cans entering and exiting Radiological Zones.

5.4.2 Issuing, reviewing and posting work permit requirements.

5.5 **Environmental Programs (ENV)** shall be responsible for:

5.5.1 Preparing, reviewing and distributing Project-Specific Sampling and Analysis Plans (PSAPs).

5.5.2 Performing statistical analysis on data received from on-site and off-site laboratories.

5.6 **Waste Characterization** shall be responsible for performing hazardous waste determinations and maintaining material evaluation files.

6.0 **GENERAL**

6.1 Warnings, Cautions, and Notes precede the Item, Step, Sub-Step, Section, or Sub-Section to which they apply.

6.0 **GENERAL** (cont.)

6.2 Any deviation from the PSAP (See Attachment A) shall be initiated and approved through the use of a Variance Request (VR) form (See Figure 1) completed by Waste Sampling. The original VR form is retained in the Waste Sampling project file. A copy is retained at the drum sampling line(s) throughout the sampling event or sampling round. Approved deviations shall be noted in the "Sampling Log Book."

6.3 To prevent cross-contamination, only one drum/can per sampling line shall be opened at a time.

6.4 Volatile organic compounds (VOC) and combustible materials being sampled or staged shall be segregated from other materials. See Steps 7.10 through 7.12 for identification and sampling of organic-contaminated materials or flammable liquids.

6.5 Collect ASL-specific Quality Control (QC) samples as specified in the PSAP (ASL B) or at the frequencies identified in Table 1 for ASLs C and D.

6.6 Collect samples from drums/cans in the following order:

6.6.1 Volatile Organic Analysis

6.6.2 Semi-Volatile Organic Analysis

6.6.3 Metals/Inorganics

6.6.4 Radionuclides

6.7 Initial and date custody tape section prior to sealing sample container.

NOTE: SMS will indicate on the PSAP the proper disposition of wastewater (rinsates) generated during the sampling event.

6.8 Rinsates generated during sampling of materials that are not F-listed wastes will be retained in a 55-gallon bung type drum. Rinsates generated during sampling of F-listed wastes will be contained in accordance with Step 8.1.2 and dispositioned in accordance with SSOP-0035.

6.9 For each sampling event, indicate the amount of wastewater (in gallons) placed in the 55-gallon drum on the Waste Sampling Decon Log (See Figure 7).

NOTE: Contact supervisor when drum storage capacity is obtained, for movement by RSO Transportation personnel.

6.10 Transport full wastewater drums with Waste Sampling Decon Log to general sump for disposal.

7.0 **HEALTH AND SAFETY REQUIREMENTS**

7.1 Portable ventilation devices shall be used per procedure 20-C-909 when collecting samples from drums/cans containing dry materials or volatile compounds.

8880

7.0 HEALTH AND SAFETY REQUIREMENTS (cont.)

7.2 Operator shall wear the appropriate respiratory protection devices is by the supervisor and identified by ES&H.

7.3 Leather-palm gloves shall be worn when handling drums, locking rings, lids, sharp or abrasive material, or when using tools.

7.4 Safety glasses shall be worn unless a full face respirator is used.

7.5 Face shields, neoprene gloves, aprons, and chemical cover goggles shall be worn when taking samples of caustic material, acid slurries, or liquids.

7.6 Gloves shall be visually inspected for holes, rips and tears prior to use and after donning. Gloves exhibiting holes, rips or tears prior to entering the controlled area shall be discarded at the Plant 6 checkpoint area. Gloves that are used or torn during sampling shall be discarded in the appropriate container identified in Step 8.1.6.

7.7 Employees shall have reviewed, and be familiar with, the information contained in the MSDS for the chemical/hazardous materials that may be used or encountered.

7.8 Specified person protective equipment (PPE), which are specified on work permits and this procedure, shall be worn before entering a sample area.

7.9 Personnel shall have access to communications devices and emergency response equipment.

7.10 Any circumstance which could have resulted in an intake of radioactive materials by inhalation, ingestion, or absorption shall immediately be reported to a Supervisor. The Supervisor shall immediately report the circumstance of possible radioactive materials intake to ES&H Radiological Control Department for evaluation. When the suspect isotope is uranium, the involved personnel shall report to the Urine Sampling Station at the end of their shift to complete an Incident Investigation Report (IIR) (Form No. FS-F-1458), and submit an incident urine sample. The involved personnel shall also report to the Urine Sampling Station at the start of their next shift to submit a follow up urine sample. When the suspect isotope is other than uranium, the involved personnel shall report to the Dosimetry Section of the Radiological Control Department for further determination of actions. Employees are responsible for complying with additional requirements as specified by the Radiological Control Section.

7.11 Any situation which could have resulted in the inhalation, ingestion, or absorption of a hazardous material shall immediately be reported to a Supervisor or to the Assistant Emergency Duty Officer (AEDO), who will immediately report the circumstances to Medical and Industrial Hygiene. The involved personnel shall be directed by the Supervisor or AEDO as to when and where to report for medical evaluation, completion of an Incident Investigation Report (IIR) (Form No. FS-F-1458), and submitting bioassay samples (e.g. blood, urine). Employees are responsible for complying with any additional requirements as specified by ES&H.

7.0 HEALTH AND SAFETY REQUIREMENTS (cont.)

7.12 Industrial Hygiene shall be contacted to measure volatile organic compounds for all drums/cans classified as containing organic-contaminated materials. Results of monitoring along with personal protective equipment requirements shall be reviewed with sampling personnel and posted at the Plant 6 control point and entrance to sample lines.

7.13 Fire and Safety Inspectors shall check for flammable vapors from all drums classified as containing organic-contaminated materials.

7.14 Flammable liquids identified by Fire and Safety shall only be sampled at the flammable liquid sampling line using explosion proof electrical equipment and non-sparking tools.

7.15 All persons will remain clear of aisle-ways while forklifts and handstackers are in use.

7.16 Personnel sampling miscellaneous material (MTC 137) shall wear an airline respirator.

8.0 PROCEDURE

8.1 Preparation for Sampling

NOTE: The supervisor shall be contacted if there are questions pertaining to the PSAP.

8.1.1 Obtain the PSAP from the supervisor.

8.1.2 Obtain lot number from MC&A for 5-gallon cans designated for storage of wastewater and contact waste generated during sampling of D- or F-listed waste materials.

NOTE: Work permits and other associated permits are located at the control checkpoint.

8.1.3 Ensure that all required permits are posted and current.

A. If permit(s) is/are not posted, or current, or if the permit is suspect, notify the supervisor.

NOTE: Scales shall be checked at the start of each operating shift or before the first use each day.

8.1.4 Check the scales to be used per procedure 20-C-912.

NOTE: VOC, flammable/combustible and corrosive material shall be moved to respectively designated area identified by the supervisor.

8.1.5 Using a handstacker or applicable equipment, move skids with drum/cans into the designated sampling or staging areas.

8.0 **PROCEDURE** (cont.)

NOTE: Two separate five gallon cans shall be used for storage of liquid and solid F-listed contact wastes, respectively.

8.1.6 Prepare contact waste canisters (for cleaning sampling equipment and disposal of trash) as follows:

A. Determine tare weight for empty, clean, color-coded 5-gallon containers.

B. Stencil the containers with the tare weight and lot number (obtained in Step 8.1.2) per RM-0005.

C. Install plastic liners in the five gallon cans.

NOTE 1: The equipment to be used for sampling is identified in the PSAP.

NOTE 2: If clean equipment is not available, obtain dirty equipment and clean per Item 8.5.

8.1.7 Obtain sampling equipment that has a "Clean Equipment Tag" (Form FMPC-OPR-3128) attached (See Figure 6).

NOTE 1: Contact supervisor if clean sample containers are not available. The supervisor contacts the Waste Sampling representative to obtain clean sample containers.

NOTE 2: If the box of jars was not labeled, "Clean," process the jars per Step 8.5.2 and submit container blanks for inorganic and radiological constituent analysis.

8.1.8 Obtain a box of clean, lidded sampling jars.

NOTE 1: The following step is applicable for sample containers used for inorganic and radiological analysis <u>only</u> when pre-cleaned bottles/jars cannot be obtained. Sample containers for organic compound analysis must be purchased pre-cleaned.

NOTE 2: Obtain tare weight for appropriate sample containers from list maintained at the sample line.

8.1.9 Complete the "Sample Label" to be used (See Figure 2), including the tare weight.

8.1.10 Fill out the applicable portions of a "Site-Wide Analysis Request/Custody Record" (Form FS-F-3361)(SWAR/CR) form (See Figure 3) per SSOP-0018.

8.1.11 Place an absorbent pad that is applicable for material to be sampled (water/oil) under the sample containers.

8.1.12 Using the Log Book Stamp, imprint the "Sample Log Book." (See Figure 4).

8.0 **PROCEDURE** (cont.)

8.1.13 Fill out the log book with the information required by the stamp.

8.1.14 Obtain Trip Blanks from QC laboratory or from Waste Sampling representative.

A. Complete labels and affix to sample containers.

B. Seal with custody tape and tamper proof seal. (See Figure 5).

C. Place in a cooler with blue ice or refrigerator in close proximity to sampling line.

D. Proceed to Step 8.1.16.

8.1.15 If unable to obtain Trip Blanks per Step 8.1.14, prepare trip blank, if required by PSAP, as follows:

NOTE: Field verification of pH should be performed over the 5-gallon can used for collection of rinse waters.

A. Obtain clean 8-ounce glass jar. Fill with distilled/deionized water and add 4 drops of hydrochloric acid (HCl). Check pH by gently pouring liquid on a pH indicator strip. If pH is less than 2, proceed to Step 8.1.15.B. If pH is greater than 2, add one drop of HCl and repeat pH measurement. Continue until a pH <2 is reached.

B. Obtain three (3) clean 40-mL volatile organic analysis (VOA) vials.

C. Fill one 40-mL vial to overflowing with a visually apparent meniscus present above the vial rim and seal sample vial.

D. Visually check sample vial for air bubbles by inverting and sharply tapping against hand or thigh.

1. If air bubbles are present, unseal container and repeat Steps 8.1.15.B through 8.1.15.D.

2. If air bubbles are not present, label sample vial, seal with custody tape, and place in cooler or refrigerator.

E. Repeat Steps 8.1.15.B through 8.1.15.D for remaining sample vials.

NOTE: Field blanks must be prepared prior to initiation of sampling event and must remain exposed to atmospheric conditions throughout duration of the sampling event. Contact Waste Sampling if conditions in proximity to sampling lines have changed to determine if additional field blanks are warranted.

8.1.16 Prepare field blanks for constituents identified in Section C of the PSAP as follows:

8.0 **PROCEDURE** (cont.)

A. Place containers in close proximity to sampling line and leave uncapped throughout sampling event.

B. Proceed with sampling event.

C. Cap sample containers and process samples in accordance with Step 8.12 upon completion of sampling event.

8.2 Sampling

WARNING

Only non-sparking tools and explosion-proof equipment shall be used in the vicinity of flammable or combustible material sampling lines to prevent an explosion.

8.2.1 Remove the locking ring and drum lid from the drum to be sampled.

NOTE: If the material is dry, use a HEPA filtered ventilation system and inspect and operate per procedure 20-C-602.

8.2.2 Visually inspect the waste material to be sampled to determine the physical characteristics (liquid, solid, dry, or moist).

NOTE 1: HEPA ventilation devices shall have current DOP Test Labels. DOP Test Labels must be unbroken and legible.

NOTE 2: If the material does not match the material type code specified in the PSAP, notify the Supervisor and complete a visual inspection form and record discrepancies in field logbook.

8.2.3 Check that the drum contents corresponds with the Material Type Code (MTC) on the drum and the PSAP.

NOTE 1: The Supervisor shall inform Waste Sampling of discrepancies between reported and observed material types.

NOTE 2: The following steps only apply when a given drum/can contains solid and liquid phases.

8.2.4 Determine total amount of material in drum/can and amount of solid/liquid phases as follows:

A. Indicate top of liquid surface at a point on the exterior of drum/can with a piece of tape.

B. Determine height, in inches, of tape marker from base of the drum/can using a measuring device (i.e.: ruler, yardstick or tape measure).

C. Determine the amount of liquid (in inches) in the drum using a Composite Liquid Waste Sampler (COLIWASA) and a measuring devi

8.0 **PROCEDURE** (cont.)

D. Calculate amount of solid (in inches) by subtracting the amount of liquids (determined in Step 8.2.4.B) from the total amount of material.

E. Record the amount of liquid and solid phases in the "Sampling Log Book" and notify Supervisor to contact Waste Sampling to determine if each phase must be sampled.

8.3 Collection of Solid Matrix Samples

8.3.1 For drums/cans with dry loose or semi-cohesive materials use a grain or pipe sampler as follows:

A. Insert grain or pipe sampler diagonally at a point near the side of the drum/can, through the center, to a point at the drum/can base directly opposite the entry point.

B. Rotate grain or pipe sampler twice until slot is facing upwards.

C. Withdraw grain or pipe sampler.

NOTE: If samples for VOA and/or SVOA analysis are required, proceed with Step 8.3.1.D. If not, proceed with Step 8.3.1.E.

D. Collect VOA and SVOA samples as follows:

1. Use a stainless steel spatula to transfer sample material from the sampling device to appropriate sample containers as identified in COLUMN A of Section C of the PSAP. (See Attachment A)

2. Fill sample containers in such a manner to minimize potential void spaces.

3. Repeat Steps 8.3.1.A through 8.3.1.D.1 until sample container is completely filled.

4. Handle and store samples in accordance with Step 8.11 of this procedure.

E. Collect samples for inorganic or radiological analysis as follows:

1. Transfer sample materials from sampling device to a clean stainless steel pan.

2. Divide sample materials into four (4) equal portions.

3. Mix opposite quarters into two (2) halves.

4. Mix halves.

5. Repeat Steps 8.3.1.E.2 through 8.3.1.E.4.

8.0 **PROCEDURE** (cont.)

6. Transfer materials to the appropriate sample containers identified in COLUMN A of Section C of the PSAP (See Attachment A).

7. Repeat Steps 8.3.1.A through 8.3.1.C and 8.3.1.E.1 through 8.3.1.E.6 until sample containers are completely full.

8. Handle and store sample in accordance with Step 8.11 of this procedure.

8.3.2 For drums/cans with moist or wet cohesive materials use a stainless steel hand auger or coring device as follows:

A. Insert sampling device diagonally at a point near the side of the drums/cans, through the center, to a point at the container base directly opposite the entry point.

B. Rotate sampling device twice.

C. Withdraw sampling device.

D. Transfer sample material from sampling device to appropriate sample containers identified in COLUMN A of Section C of the PSAP, in accordance with Steps 8.3.1.D and 8.3.1.E of this procedure.

8.3.3 For drums/cans with materials such as paper, trash, personal protect equipment, filters, pads, rags, and other miscellaneous debris, coll samples as follows:

A. Sort materials within the drum/can. Collect materials which exhibit evidence of discolorations or stains for analysis.

B. Use scissors, shears, utility knives or similar tools to cut materials. Transfer sample material to appropriate sample containers identified in COLUMN A of Section C of the PSAP, in accordance with Steps 8.3.1.D and/or 8.3.1.E of this procedure.

NOTE: If drum/can contains materials that cannot be feasibly cut into small pieces, notify supervisor to contact Waste Sampling to determine the appropriate sampling approach.

C. Complete visual inspection and document in Sample Logbook.

8.4 Collection of Liquid Matrix Samples

8.4.1 Use a clean, glass COLIWASA for collection of liquid waste samples.

A. Insert inner rod of glass COLIWASA inside sheath.

B. Lower glass COLIWASA vertically, keeping the ground glass end of the inner rod away from the hole in the sheath bottom, at a ra that the liquid levels inside and outside the sample tube rem even.

8.0 **PROCEDURE** (cont.)

C. Push inner rod downwards to close the sampling device when the drum/can base has been encountered.

D. Withdraw sampling device with one hand while decontaminating the outside surface with a clean, disposable cloth.

E. Pull inner rod upwards to transfer material to appropriate sample containers identified in COLUMN B or C of Section C of the PSAP in accordance with Step 8.12 and/or 8.13 of this procedure.

NOTE: Equipment decontamination shall be performed over a 5-gallon container. If the material sampled is an F- listed waste, the container must be marked with the appropriate 15-digit FEMP Lot Marking Code (Refer to Step 8.1.2).

8.5 Equipment Decontamination

8.5.1 Sampling equipment and associated devices used for sample transfer shall be decontaminated as follows:

A. Rinse equipment with potable (tap) or distilled water.

B. Clean equipment using a phosphate-free laboratory detergent and potable water solution and scrub brushes.

C. Rinse with potable (tap) or distilled water.

D. Rinse twice with organic-free, distilled/deionized water.

E. If sampling equipment exhibits signs of visible contamination, deliver to site decontamination facility or perform Step 8.5.2.

F. Inspect decontaminated equipment for signs of visible residual contamination (adhered particles) or stains, discolorations.

8.5.2 Decontaminate equipment that exhibits signs of visible contamination or stains/discolorations as follows:

A. Rinse with potable (tap) water.

B. Clean equipment with a phosphate-free laboratory detergent and potable water solution and scrub brushes.

C. Rinse with potable (tap) water.

D. Rinse with 0.02 normal hydrochloric or sulfuric acid.

E. Rinse with potable (tap) water.

F. Rinse with isopropyl alcohol.

G. Triple rinse with organic-free, distilled/deionized water.

0880

8.0 **PROCEDURE** (cont.)

8.5.3 Allow sampling equipment to air dry when feasible, or use a clean, T free disposable cloth to dry the sampling equipment; then store as follows:

A. Wrap equipment in aluminum foil with the shiny side facing outward if the equipment will be used for VOA or SVOA sample collection.

B. Wrap equipment in a plastic bag if the equipment will not be used for VOA or SVOA sample collection.

8.5.4 Complete a "Clean Equipment Tag", Form FMPC-OPR-3128 (See Figure 6).

8.5.5 Attach the tag to the decontaminated equipment.

8.5.6 Store sampling device by placing decontaminated sampling equipment in a clean protected area.

8.5.7 Process rinsate wastewater generated during sampling of F-listed wastes in accordance with SSOP-0035.

NOTE: Equipment rinsate samples should be collected at the frequency specified in the PSAP, either prior or subsequent to completion of the sampling event and MUST be collected prior to sampling materials of a differing waste stream (Material Type and Source Code).

8.6 Equipment Rinsate Blanks

8.6.1 Obtain sample containers as specified in COLUMN D of Section C of the PSAP (See Figure 1).

8.6.2 Hold stainless steel pan directly beneath the decontaminated sampling device.

8.6.3 Pour organic-free, distilled/deionized water over the decontaminated sampling equipment.

8.6.4 Pour water from stainless steel pan to appropriate sample container.

8.6.5 Repeat Steps 8.6.2 through 8.6.4 until all sample containers are filled.

8.6.6 Process samples in accordance with Step 8.12.

8.7 Duplicate Samples

8.7.1 Collect two sets of samples, when specified by PSAP, from the designated drum/can in accordance with Steps 8.3 and/or 8.4 of this procedure.

8.7.2 Retain one (1) sample set as the "original sample" and assign a sample number as specified in the PSAP.

8.7.3 Retain the other sample set as the "duplicate sample" and assign a unique sample number as specified in the PSAP.

8.0 **PROCEDURE** (cont.)

6989

8.7.4 Process original and duplicate samples in accordance with Step 8.11, 8.12, or 8.13 depending on the matrix of the duplicate sample.

8.8 Split Samples

8.8.1 Obtain two sets of sample containers when specified by the PSAP, and collect sufficient sample material from the designated drum/can in accordance with Steps 8.3 and/or 8.4 of this procedure.

8.8.2 Distribute equal amounts of sample material to each set of sample containers.

NOTE: Solid material for inorganic and radiological analyses must be homogenized per Step 8.3.1.E.1. prior to filling of sample containers. Solid materials for organic analysis (VOAS and SVOAS) should not be homogenized, but split equally between sample container sets.

8.8.3 Assign the same sample number to the "original sample" and "split samples".

8.8.4 Process original and split samples in accordance with Step 8.11, 8.12, or 8.13 depending on the matrix of the split samples.

8.9 Container Blanks

NOTE 1: Container blanks are required if pre-used sample containers are cleaned and re-used per Step 8.5.2 or if vendor-supplied analytical data are not available.

NOTE 2: Container blanks are not required if vendor-supplied analytical data (i.e., Certificate of Analysis) are provided for each batch of sample containers used during the sampling round.

8.9.1 If vendor-supplied analytical data are supplied perform the following:

A. Submit a copy of analytical data to Waste Sampling for storage in the project file.

B. Document vendor-supplied container numbers (provided on a bar code label attached to sample container) in the Sampling Log Book.

C. Proceed to Step 8.11.

8.9.2 If vendor-supplied analytical data are not available, obtain a set of "clean" (unused) sample containers for metals and radionuclides analysis as specified in the PSAP.

8.9.3 Process empty "clean" sample containers in accordance with Step 8.11.

8.9.4 Indicate "Container Blank" in the remarks section of the SWAR/CR.

0800

3.0 **PROCEDURE** (cont.)

NOTE: Preservative blanks may be required if vendor-supplied assay are not available.

8.10 Preservative Blank

8.10.1 If vendor-supplied assay data are provided, document the preservative manufacturer and lot number (batch identifier) for the respective preservative used in the Sampling Book.

A. Submit a copy of assay data to Waste Sampling for storage in the project file.

B. Proceed to Step 8.11.

8.10.2 If vendor-supplied assay data are not available, obtain the following sample containers and preservatives when a preservative blank is specified in the PSAP.

A. For VOC analysis, obtain a clean 8-ounce glass jar, fill with deionized/distilled water, and add 4 drops of hydrochloric acid. Transfer acidified liquid to three clean 40-mL VOA vials with Teflon-lined septum lids.

B. For metals and radiological analysis, collect one (1) one-liter polyethylene bottle and add 20 to 24 drops of nitric acid.

8.10.3 Pour organic-free, distilled/deionized water into the prepreserved sample containers identified in Steps 8.10.2.A and 8.10.2.B.

8.10.4 Process samples in accordance with Step 8.12.

8.10.5 Indicate "Preservative Blank" in the remarks section of the SWAR/CR.

8.11 Solid-Matrix Concentrated Waste Sample Handling and Storage

8.11.1 Check cooler/refrigerator inner temperature with a thermometer (graded in units of 1°C) on a daily basis to ensure samples are preserved at 2-6°C.

8.11.2 Record cooler/refrigerator temperature in field logbook.

8.11.3 Handle and store solid-matrix samples and duplicate/split samples as follows:

A. Complete label and affix to sample container.

B. Seal with custody tape.

C. Place VOA, SVOA, and metals samples in a cooler with 'blue ice' or refrigerator in close proximity to the sampling line.

D. Place radiological samples in close proximity to the samplin

8.0 **PROCEDURE** (cont.)

8.12 Low/Medium Concentration Liquid-Matrix Sample Handling and Storage

8.12.1 Check cooler/refrigerator inner temperature with a thermometer (graded in units of 1°C) on a daily basis to ensure samples are preserved at 2-6°C.

8.12.2 Record cooler/refrigerator temperature in sample logbook.

8.12.3 Transfer low/medium concentration liquid-matrix VOA samples, field blanks, equipment rinsate, and duplicate/splits from the temporary storage container (8-ounce glass jar or larger), as required, to three (3) 40-mL VOA vials in accordance with Steps 8.1.15.A through 8.1.15.D of this procedure.

A. Complete labels and affix to sample containers.

B. Seal with custody tape.

C. Place in a cooler with 'blue ice' or refrigerator in close proximity to sampling line.

8.12.4 Process low/medium concentration liquid-matrix SVOA samples, field blanks, equipment rinsates and duplicates/splits as follows:

A. Complete labels and affix to the sample container.

B. Seal with custody tape.

C. Place in a cooler with 'blue ice' or refrigerator in close proximity to the sampling line.

WARNING

Goggles, nitrile gloves, and an apron vest must be worn when working with acids to prevent possible serious burns.

8.12.5 Process low/medium concentration liquid-matrix samples, field blanks, equipment rinsates and duplicates/splits for metals and radiological analysis as follows:

A. Add one (1) milliliter (mL) or 20 to 24 drops of Nitric Acid (HNO_3) per 1,000 mL (1-liter) of sample using an acid ampule or dispensing bottle. Cap container and gently invert and rotate bottle to mix acid with sample material.

NOTE: For field blank and equipment rinsate samples Step 8.12.4.I is not necessary, based on past experience.

B. Check pH by gently pouring the acidified sample onto an indicator strip, over a 5-gallon can used to collect rinsate wastewater, and comparing color codes.

8.0 PROCEDURE (cont.)

C. If pH is greater than 2, add one drop of nitric acid (HNO_3) and repeat Steps 8.12.4.A and 8.12.4.B. Repeat Steps 8.12.4.B.1 and Steps 8.12.4.A and 8.12.4.B until a pH of less than 2 is achieved.

D. Complete labels and affix to sample container.

E. Seal with custody tape.

F. Place samples for metals analysis in a cooler with 'blue ice' or refrigerator in close proximity to the sampling line.

G. Place radiological samples in a controlled storage area in close proximity to the sampling line.

8.12.6 Complete SWAR/CR in accordance with SSOP-0018.

8.12.7 Transport samples in coolers to the FEMP Sample Processing Laboratory (SPL) with the SWAR/CR and a copy of the PSAP.

8.13 Liquid-Matrix Concentrated Waste Sample Handling and Storage

8.13.1 Check cooler/refrigerator inner temperature with a thermometer (graded in units of 1°C) on a daily basis to ensure samples are preserved at 2-6°C.

8.13.2 Record cooler/refrigerator temperature in sample logbook.

8.13.3 Process liquid matrix concentrated waste samples and duplicates/splits for VOA, SVOA, and metals analyses as follows:

A. Complete label and affix to sample container.

B. Seal with custody tape.

C. Place samples in a cooler with 'blue ice' or refrigerator in close proximity to the sampling line.

8.13.4 Process liquid matrix concentrated waste samples and duplicates/splits for inorganic and radiological analyses as follows:

A. Complete label and affix to sample container.

B. Seal with custody tape.

C. Place samples in a controlled storage area in close proximity to the sampling line.

8.14 Completion of Site-Wide Analysis Request/Custody Record (SWAR/CR)

8.14.1 Complete SWAR/CR in accordance with SSOP-0018, "Processing Site-Wide Analysis Request/Custody Record for Sample Control."

8.0 **PROCEDURE** (cont.)

8.14.2 Complete "Remarks" section of SWAR/CR as follows:

A. List the Analytical Support Level (ASL) identifier (i.e., B. C, D, etc.).

B. List the relative amount of preservative (in weight %) used for sample preservation as follows:

1. Refer to Table 2, locate type of preservative and volume of sample container used.

2. If number of drops of preservative used is less than maximum number of drops allowed, indicate less than respective wt. % (e.g., <0.04 wt. % HCl <0.15 wt. % HNO_3, etc.).

3. If number of drops of preservative used is greater than maximum number of drops allowed, indicate greater than respective weight percent (e.g., >0.04 wt. % HCl, >0.015 wt. % HNO_3, etc.).

FIELD QUALITY CONTROL SAMPLES

	ANALYTICAL SUPPORT LEVELS		
	B	C	D
INORGANICS, ORGANICS, and RADIONUCLIDES Field QC Samples			
Field blanks	A/S	1 per 20 or 1 per sampling event, whichever is more frequent	20 or 1 per sampling event, whichever is more frequent
Equipment rinsate blanks	A/S	1 per 20 or 1 per sampling event, whichever is more frequent	1 per 20 or 1 per sampling event, whichever is more frequent
Field duplicates	A/S	1 per 20 or 1 per sampling event, whichever is more frequent	1 per 20 or 1 per sampling event, whichever is more frequent
Preservative blanks	A/S	A/S	A/S
Container blanks	A/S	1 per QC lot of containers	I per QC lot of containers
Laboratory control samples	1 per analytical batch if applicable	1 per analytical batch if applicable	1 per analytical batch if applicable
Method blanks	1 per analytical batch of samples	1 per analytical batch of samples	1 per analytical batch of samples
Trip blanks (VOAs only)	A/S	1 per shipping container	1 per shipping container

FIELD QUALITY CONTROL SAMPLES
Table 1

6989

PRESERVATIVE PARAMETERS FOR SAMPLES

Preservative = HCl (HYDROCHLORIC ACID)

Sample Container Size (in mL)	Maximum Wt. % of Preservative	Maximum Amount of Preservative (mL)	Maximum # of Drops of Preservative **
40	0.040	0.037	Less Than 1
120	0.040	0.110	2
250	0.040	0.229	5
500	0.040	0.458	11
1000	0.040	0.916	22
4000	0.040	3.665	88

Preservative = HNO3 (NITRIC ACID)

Sample Container Size (in mL)	Maximum Wt. % of Preservative	Maximum Amount of Preservative (mL)	Maximum # of Drops of Preservative **
40	0.150	0.061	1
120	0.150	0.182	4
250	0.150	0.380	9
500	0.150	0.760	18
1000	0.150	1.520	36
4000	0.150	6.079	145

Preservative = H2SO4 (SULFURIC ACID)

Sample Container Size (in mL)	Maximum Wt. % of Preservative	Maximum Amount of Preservative (mL)	Maximum # of Drops of Preservative **
40	0.350	0.076	1
120	0.350	0.228	5
250	0.350	0.476	11
500	0.350	0.951	22
1000	0.350	1.902	45
4000	0.350	7.609	182

Preservative = NaOH (SODIUM HYDROXIDE)

Sample Container Size (in mL)	Maximum Wt. % of Preservative	Maximum Amount of Preservative (mL)	Maximum # of Drops of Preservative **
40	0.080	0.042	1
120	0.080	0.125	3
250	0.080	0.261	6
500	0.080	0.523	13
1000	0.080	1.046	25
4000	0.080	4.183	100

Note: ** – Assumes that 24 drops of preservative = 1 mL of preservative

PRESERVATIVE PARAMETERS FOR SAMPLES
Table 2

0088

VARIANCE REQUEST

VR No. ____

VARIANCE REQUEST

Page . of .

Date _____

VARIANCE (Include Justification)

Variance:

Justification:

REQUESTED BY: _____ Date: _____

APPROVED BY: _____ Date: _____
Project Manager

_____
Quality Assurance

_____
SCQ Implementation

APPLICABLE DOCUMENT(S) AND SECTION NUMBER(S)

VARIANCE REQUEST
Figure 1

6989

SAMPLE LABELS

SAMPLE ID: XXXXXXXXXX

(barcode goes here)

XXXXXXXXXXXXXXXXXXXXXXXXXXXXXXXXXXXX
SAMPLE ID : XXXXXXXXXX
(barcode goes here)

DATE SAMPLED _____ TIME SAMPLED _____

MATERIAL NAME / SAMPLE TYPE
XXXXXXXXXXXXXXXXXXXXXXXXXXXXXXXXXXXX
XXXXXXXXXXXXXXXXXXXXXXXXXXXXXXXXXXXX
PRESERVATIVES
XXXXXXXXXXXXXXXXXXXXXXXXXXXXXXXXXXXX
CONTAINER TYPE XXXXXXXXXXXXXXXX GROSS WEIGHT _____

COLLECTORS INITLS _____ TARE WEIGHT _____

CNT: _____

COC #: _____

SAMPLE ID: XXXXXXXXXX

(barcode goes here)

Label A

TEMP SAMPLE ID _____ X-REF SAMPLE ID _____

DATE SAMPLED _____ TIME SAMPLED _____

MATL NAME _____

SAMPLE TYPE _____

CONTAINER TYPE XXXXXXXXXXXXXXXXX GROSS WEIGHT _____

COLLECTORS INITLS _____ TARE WEIGHT _____

PRESERV: _____

CNT: _____

COC #: _____

Label B

SAMPLE LABELS
Figure 2

SITE-WIDE ANALYSIS REQUEST/CUSTODY RECORD
Form No. FS-F-3361

FEMP
RSO - ANALYTICAL

Form Number

SITE-WIDE ANALYSIS REQUEST/CUSTODY RECORD

Page ____ of ____

PROJECT:

☐ PLAN NO.: OR ☐ PROJECT NO.:

PROJECT MANAGER/ENGINEER:

FOR SAMPLE RELATED PROBLEMS, CONTACT:
ORGANIZATION:
NAME: PHONE:

SAMPLER: PHONE:

CHARGE NUMBER: LOT MARKING CODE:

SAMPLER REMARKS:

SAMPLER SIGNATURE(S):

SEND RESULTS TO:

CHECK FOR: ☐ S R LAB ☐ BIO LAB ☐ WTP LAB

SAMPLE SOURCE, DESCRIPTION/IDENTIFICATION, ANALYSIS REGIMEN

ITEM NO.	CUSTOMER NUMBER	SAMPLE POINT	MATRIX CODE	COLLECTED DATE	COLLECTED TIME	CONTAINER/ VOLUME	COMPOSITE	GRAB	NO. OF CONTAINERS	ANALYTES CODE - (UNITS CODE)	REMARKS
1											
2											
3											
4											
5											
6											
7											
8											
9											
10											

ITEM/REASON	RELINQUISHED BY	RECEIVED BY	DATE	TIME	ITEM/REASON	RELINQUISHED BY	RECEIVED BY	DATE	TI

NO.	DISTRIBUTION OF COPIES
1	LABORATORY
2	REQUESTER
3	SAMPLER

FS-F-3361 (REV 3/25/93)

SITE-WIDE ANALYSIS REQUEST/CUSTODY RECORD
Form No. FS-F-3361
Figure 3

6989

SAMPLE LOG BOOK

PROJECT Sample Plan 144 — Notebook No. _____ — 29

Continued From Page _____

BLDG 71

DATE 3-20-91 LOCATION Satellite Room SAMPLE NUMBER R144-7

SAMPLE PLAN 144 NUMBER AND VOLUME OF SAMPLES 7 Jars

MATERIAL Contaminated Burnable Rags Filter with Rags 2-40ml Vials 2-QT, 1-1QT, 1-2QT

MATERIAL DESCRIPTION Dirt - liquid NUMBER OF PHASES TWO

MATERIAL TYPE 027 SOURCE CODE 530 ANALYSIS REQUIRED Total VOAS TCLP Metals,

DRUM SAMPLED HA97-530-D027-0987 D#0 1-QT Alpha-Beta Total VOA PH Flash Point

TIME SAMPLED 1800 TYPE Composite (Liquid) Darrell W. Hartley

SAMPLED BY E. Merrill - W. Daniel 3-20-91

Note: 13 inches total 9 inches in Water = 69% water

Note: Plastic Bottles Metal Cans Plastic Trash Gloves

BLDG 71

DATE 3-21-91 LOCATION Satellite Room SAMPLE NUMBER R144-18

SAMPLE PLAN 144 NUMBER AND VOLUME OF SAMPLES 7 Jars

MATERIAL Contaminated Burnable Rags Filter with Rags 2-40Z, 1-QT, 1-80Z

MATERIAL DESCRIPTION Plastic Bottles Metals Cans Plastic Trash Gloves (Solid) NUMBER OF PHASES TWO

MATERIAL TYPE 027 SOURCE CODE 530 ANALYSIS REQUIRED Total VOAS TCLP Metals,

DRUM SAMPLED HA97-530-D027-0287 D#0 Total VA. 1-QT Alpha-Beta

TIME SAMPLED 0830 TYPE Composite (Solid) Darrell W. Hartley

SAMPLED BY E. Merrill 3-21-91

Continued on Page

Read and Understood By

R G Pierce 3-21-91

Signed Date Signed Date

SAMPLE LOG BOOK
Figure 4

TAMPER PROOF SEAL

If Seal is broken or package damaged check contents before signing receipt.

TAMPER PROOF SEAL
Figure 5

6989

CLEAN EQUIPMENT TAG
Form No. FMPC-OPR-3128

CLEANED BY: _____

DATE: _____

Cleaned according to sop : _____

FMPC-OPR-3128 (6/22/89)

CLEAN EQUIPMENT TAG
Form No. FMPC-OPR-3128
Figure 6

WASTE SAMPLING DECON LOG

WASTE SAMPLING DECON LOG

DRUM#

	DATE SAMPLED	SAMPLE PLAN #	MEF #	DESCRIPTION OF SAMPLE MEDIA	GAL	BADGE	NAME
MON							
TUE							
WED							
THUR							
FRI							

DO NOT ADD DECON WATER GENERATED FROM F LISTED WASTE

WASTE SAMPLING DECON LOG
Figure 7

6989

DRUMMED WASTE MATERIAL PSAP

Drummed Waste Material
Project-Specific Sampling and Analysis Plan

Number: 1-
Date: 12-11-93
Page 1 of 5

A. Identifying Information

1) Project Name: 13-
2) Plan No.: 1-
3) Material Description/Matrix Code(s): 2-
4) Number of Drums in Sub-Waste Stream: 10-
5) Material Type: 3-
6) Source Code: 4-
7) Material Evaluation Form #: 5-
8) Sampling Location for Drums: 6-
9) Process Knowledge: 7-

B. Sampling Information

1) General: Samples taken will be contained in glass or polyethylene jars with teflon lined lids.
2) Preservation Method: See Analytical Requirements in Section C.
3) Holding Times: See Preservative and Holding Time Guidelines in Section G. Holding times and sample volume/container requirements for media-specific analyses not listed in the SCQ are provided by the FEMP laboratory facility.
4) Sample Technique: 8-
5) Number of Drums to be Sampled and Analyzed: x, see page 2.
6) Composite Samples: Yes (No)
7) Visual Inspection Performed?: Yes (No) (See attached Visual Inspection Form).
8) Field Contact: 14-
9) Send Results to:
10) Charge No./Project Manager: 15-
11) Required QA/QC Samples:

Field QC	Yes	No	Notes
Trip Blank			no volatile organic samples
Field Blank			1 per 20 samples or 1 per sampling event
Equipment Rinsate			1 per 20 samples or 1 per sampling event
Duplicate			1 per 20 samples or 1 per sampling event
Container Blank		X	analytical data supplied by supplier
Preserv. Blank		X	assay data supplied by supplier

Laboratory QC

Laboratory QC sample type and frequency requirements are provided in Appendix G of the SCQ.

Authorized Signature/Date Approved/Date

DRUMMED WASTE MATERIAL PSAP
Attachment A (Sheet 1 of 5)

0808

DRUMMED WASTE MATERIAL PSAP

Drummed Waste Material
Project-Specific Sampling and Analysis Plan

Number: 1-
Date: 12-11-93
Page 2 of 5

Sampling Information

Start with Sample Number 9- for the first drum sample, then number consecutively until sampling is completed. The drum that is to be sampled in duplicate will be indicated with an asterisk (*). The duplicate samples will be given different sample numbers.

Sample Number	Sample Matrix	Inv. Number	Lot Number	Drum Number
9-				
1-				
1-				
1-				
1-				
1-				
1-				
1-				
1-				

Authorized Signature/Date Approved/Date

6989

DRUMMED WASTE MATERIAL PSAP

Drummed Waste Material
Project-Specific Sampling and Analysis Plan

Number: 1-
Date: 12-11-93
Page 3 of 5

C. Analytical Requirements

In order to satisfy waste characterization requirements the following analyses may be performed:

	COLUMN A		COLUMN B	
Analysis Requested (Analysis Code) ASL = Analytical Support Level VOA = Volatile Organics Analysis SVOA = Semi-Volatile Organics Analysis U,Th = Uranium, Thorium PFLT = Paint Filter Liquids Test	**Solid Matrix Concentrated Waste Sample Container and Preservative/Unit Codes** oz. = ounce P00, P01 = No preservation, Cool 4 deg. C U00, U04, U06, U07, U19 = ppm, mg/kg, ug/L, ug/g, pCi/g U99 = present/absent TLC = Teflon Lined Closure		**Liquid Matrix Concentrated Waste Sample Container and Preservative/Unit Codes** mL, L = milliliter, Liter P00 = no preservation needed U02, U06, U17, U18 = mg/L, ug/L, pCi/mL, pCi/L U35, U37 = pH units, degrees Fahrenheit TLS = Teflon Lined Septum	
Total VOAs (2411)* TCLP VOAs (2459)** ASL B	(3) x 4-oz. glass, TLC	P01/U04(total) U06(TCLP)	(1) x 250 mL glass jar, TLS	P01/U06
Total SVOAs (2470)* TCLP SVOAs (2471)** ASL B	(1) x 8-oz. amber glass, TLC	P01/U04(total) U06(TCLP)	(1) x 250 mL amber glass, TLC	P01/U06
Total Metals (2402)* TCLP Metals (2401)** ASL B	(1) x 8-oz. glass or polyethylene	P01/U04(total) U06(TCLP)	(1) x 250 mL glass, TLC	P01/U06
Flash Point (2434) pH (2435) ASL B	.....	...	(1) x 250 mL glass, TLC	P00/U37 P00/U35
Total U (2442) ASL B	(1) x 8-oz. glass or polyethylene	P00/U07(soil) U00(any other solids)	(1) x 120 mL glass or polyethylene	P00/U06
Isotopic U (2026-29) ASL B	(1) x 8-oz. glass or polyethylene	P00/U19	(1) x 250 mL glass or polyethylene	P00/U18
PFLT (2053) ASL B	(1) x 4-oz. glass or polyethylene	P00/U99	.....	...
Alpha-Beta (2005)	(1) x 4-oz. polyethylene	P00/U19	(1) x 120 mL polyethylene	P00/U17
Description of material (Color, appearance, consistency, etc.)				

Note: * - Perform analysis for liquid matrix concentrated waste samples.
** - For solid matrix samples only. Prepare sample extract, then conduct Total concentration screening analyses. If Total concentrations exceed 20 times the TCLP regulatory value, then analyze the sample extract.

0888

Drummed Waste Material
Project-Specific Sampling and Analysis Plan

Number: 1-
Date: 12-11-93
Page 4 of 5

C. Analytical Requirements (cont.)

	COLUMN C		COLUMN D	
Analysis Requested (Analysis Code) ASL = Analytical Support Level VOA = Volatile Organics Analysis SVOA = Semi-Volatile Organics Analysis U,Th = Uranium, Thorium PFLT = Paint Filter Liquid Test	Low to Medium Concentration Liquid Samples Container and Preservative/Unit Codes mL, L = milliliter, Liter P01, P09 = Cool 4 deg. C, HCl to pH < 2. P11 = HNO_3 to pH < 2 P13 = HNO_3 to pH < 2/cool 4 deg. C U06, U17, U18 = mg/L, ug/L, pCi/mL, pCi/L U35, U37 = pH units, degrees Fahrenheit TLS = Teflon Lined Septum TLC = Teflon Lined Closure		Quality Control Sample@ Container and Preservative/Unit Codes mL, L = milliliter, Liter P01, P09 = Cool 4 deg. C, HCl to pH < 2. P11 = HNO_3 to pH < 2 P13 = HNO_3 to pH < 2/cool 4 deg. C U06, U17, U18 = mg/L, pCi/mL, pCi/L U35, U37 = pH units, degrees Fahrenheit TLS = Teflon Lined Septum TLC = Teflon Lined Closure	
Total VOAs (2411) ASL B	(3) x 40 mL glass vials, TLS	P01 + P09/U06	(3) x 40 mL glass vials, TLS	P01 + P09/U06
Total SVOAs (2470) ASL B	(1) x 1 gallon jar amber glass, TLC	P01/U06	(1) x 1 gallon jar amber glass, TLC	P01/U06
Total Metals (2402) ASL B	(1) x 1 L jar, polyethylene	P13/U06	(1) x 1 L jar, polyethylene	P13/U06
Flash Point (2434) pH (2435) ASL B	(1) x 250 mL glass, TLC	P00/U37 P00/U35	-----	---
Total U (2442) ASL B	(1) x 1 L jar, glass or polyethylene	P11/U06	(1) x 1 L jar glass or polyethylene	P11/U06
Isotopic U (2026-29) ASL B	(1) x 1 L jar, glass or polyethylene	P11/U18	(1) x 1 L jar glass or polyethylene	P11/U18
PFLT (2053) ASL B	-----	---	-----	---
Alpha-Beta (2005)	(1) x 120 mL polyethylene	P11/U17	(1) x 120 mL polyethylene	P11/U17
Description of material (Color, appearance, consistency, etc.)				

Note: @ - Container and preservation/unit code requirements for trip blanks, field blanks, and equipment rinsates only. Container and preservation/unit code reqirements for duplicate or split samples are provided in Columns A, B, or C, depending on the matrix of the waste sample.

6989

DRUMMED WASTE MATERIAL PSAP

Drummed Waste Material
Project-Specific Sampling and Analysis Plan

Number: 1-
Date: 12-11-93
Page 5 of 5

D. Sub-Waste Stream Description

The sub-waste stream consists of 10- drums in 11- lots. The material type of "3-" and the source code of "4-" indicate that this material is 7-

E. Safety Concerns

See SOP 20-C-805, Sections 6.0 to 6.14 for Health and Safety requirements.

F. Representative Sampling Procedure

12- drums were chosen at random, and are listed on page 2 of this form. If visual inspection indicates that the material has free liquid or is completely dry, then a P.F.L.T is not necessary. Record pertinent information in the Field Log Book for each drum sampled as specified in SOP 20-C-805, Section 7.2.13.

G. Preservative and Holding Time Guidelines

See Tables 6.1 and 6.2 of the "Prototype Sampling and Analysis Plan for Containerized Waste at the FEMP" and/or Table 6-1 "Sample Container and Preservation Requirements," of the Sitewide CERCLA Quality Assurance Project Plan (SCQ). Sample container, preservative, and holding time requirements for analytical parameters not provided in these tables have been obtained from federal or state of generation poilcies/directives, or from the FEMP or FEMP-contracted laboratory facility; and incorporated into this PSAP as permitted in Section 3.3.2 of the SCQ.

This form must be dated and signed by an authorized individual.

If this Sub-Waste Stream is sampled and analyzed according to the information on this form, the results generated will be in agreement with the sampling and analysis requirements of NVO-325 (Rev. 1), Nevada Test Site Defense Waste Acceptance Criteria, Certification, and Transfer Requirements; and the Fernald Environmental Management Project (FEMP) Sitewide CERCLA Quality Assurance Project Plan (SCQ).

Authorized Signature/Date Approved/Date

DRUMMED WASTE MATERIAL PSAP
Attachment A (Sheet 5 of 5)

8883

RECORD OF ISSUE/REVISIONS

DATE	REV. NO.	DESCRIPTION AND AUTHORITY
11-27-94	0	Document requirement to establish procedure for Sampling Waste Materials contained in 5 to 10 gallon cans, and 30 to 110 gallon drums per Request No. P94-0588, initiated by J. Gnoose.

STEP 3.

- 6989

NON-CONTROLLED COPY

CONTROL NO. [redacted]
SITE PROCEDURE EW-0006 (SSOP-0044)
REVISION NO. 1

MANAGEMENT OF EXCESS SOIL, DEBRIS, AND WASTE FROM A PROJECT

Effective Date: 01-31-94

Originator (Subject Expert): _____
Date

Checker Concurrence: _____
Date

APPROVED BY: _____ 2/15/95
Terence D. Hagen, Manager of Environmental Restoration and Waste Management
Date

FERNALD ENVIRONMENTAL MANAGEMENT PROJECT

Fernald Environmental Restoration Management Corporation
P. O. Box 538704
Cincinnati, Ohio 45253-8704

CONTRON NO. FER-0411 6989

SITE STANDARD OPERATING PROCEDURE
DOCUMENT NO. SSOP-0044
REVISION NO. 1

MANAGEMENT OF EXCESS SOIL, DEBRIS, AND WASTE FROM A PROJECT

SSOP-0044

Effective Date: 01-31-94

AUTHORIZED BY: J. Thiesing, Executive Vice President 2-3-94 Date

FERNALD ENVIRONMENTAL MANAGEMENT PROJECT

Fernald Environmental Restoration Management Corporation
P. O. Box 398704
Cincinnati, Ohio 45239-8704

PREFACE

This revision of SSOP-0044 (Site Standard Operating Procedure) incorporates the Fernald Environmental Management Project (FEMP) site-wide management concepts and implementation strategy for managing soil and debris established in Removal Action 17 (RA 17) Work Plan that was approved by both the Ohio Environmental Protection Agency (OEPA) and United States Environmental Protection Agency (U.S. EPA). The new management concept streamlines the process of dealing with materials and wastes from pre-Record of Decision (ROD) removal sources by standardizing and simplifying characterization steps while still being protective of human health, safety and the environment. These management procedures parallel those on other Superfund sites being remediated under the guidance of the U.S. EPA or by firms under contract to the U.S. EPA.

The initiating activity for delineating the appropriate soil and debris or waste controls will be a contaminant assessment. The assessment of contaminants in the affected soil and debris or waste will include a review of existing characterization data or sampling and analysis results, historical records, and process knowledge. NO SAMPLING IS REQUIRED AT THIS STAGE OF PLANNING. The assessment results will be used to determine the management options according to the RA 17 work plan and this procedure.

These new concepts (new with respect to previous FEMP Waste Handling Procedures), as applied to the planning of removal action projects, begin with the proposition that soil and debris that are to be managed as a result of removal actions are <u>not</u> automatically classified as hazardous for management purposes. The required level of control and mechanisms for managing soil and debris are dependent upon such factors as material, its regulatory status, and the risks associated with managing the material. A practical approach for storage or disposition of these materials is needed if an aggressive, yet prudent, approach to FEMP cleanup is implemented. This new revision of SSOP-0044 was developed to recognize the environmental cleanup mission of the FEMP versus the site's previous mission as an operating facility. To do this, the new SSOP-0044 properly separates the management of soil, debris, and wastes subject to regulation under RCRA Subtitle C hazardous waste requirements from the relatively larger volume of non-RCRA contaminated excess soil, debris, and wastes that must be managed under Comprehensive Environmental Response, Compensation and Liability Act (CERCLA) removal actions. Proper separation is a cost-effective means to minimize the volume of excess soil, debris, and wastes subject to increased regulation and higher costs associated with hazardous waste storage, treatment, and disposal requirements.

Other procedures and documentation exist including Occupational Safety and Health Administration (OSHA) and As Low As Reasonably Achievable (ALARA) concepts from DOE orders and guidelines that must be considered when planning a project. This procedure specifically addresses planning for the disposition of soil, debris, and waste.

Fernald Environmental IRMCO Management Corporation	Title: MANAGEMENT OF EXCESS SOIL, DEBRIS, AND WASTE FROM A PROJECT	
	DOCUMENT NO: SSOP-0044 REVISION NO: 1	
	Effective Date: 01-31-94	Page 1 of 34

TABLE OF CONTENTS

SECTION	TITLE	PAGE
	PREFACE	ii
1.0	PURPOSE	4
2.0	SCOPE	4
3.0	DEFINITIONS	4
4.0	RESPONSIBILITIES	11
5.0	GENERAL	13
6.0	PREREQUISITES	13
7.0	PROCEDURE	14
7.1	CONDUCTING THE SITE WALKDOWN	14
7.2	ESTIMATING QUANTITIES OF EXCESS SOIL, DEBRIS, AND WASTE MATERIALS	14
7.3	PLANNING SOIL MANAGEMENT AND DISPOSITION PLANNING OF EXCESS SOIL	16
7.4	INTERIM SOIL STORAGE OPTIONS	23
7.5	PLANNING DEBRIS AND WASTE MATERIALS MANAGEMENT AND DISPOSITION PLANNING OF DEBRIS AND WASTE MATERIALS	25
7.6	INTERIM DEBRIS/WASTE STORAGE OPTIONS	29
8.0	APPLICABLE DOCUMENTS	33
8.1	DRIVERS	33
8.2	REFERENCES	34

LIST OF FIGURES

FIGURE	TITLE	PAGE
1	FEMP PROJECTS FLOW CHART	5
2	EXAMPLE OF WASTE CONTAINER MATRIX	17
3	SOIL MANAGEMENT PLAN FLOW DIAGRAM - PHASE I AND PHASE II	18
4	DEBRIS MANAGEMENT PLAN FLOW DIAGRAM - PHASE I	26
5	DEBRIS MANAGEMENT PLAN FLOW DIAGRAM - PHASE II	27

TABLE OF CONTENTS (cont.)

LIST OF TABLES

TABLE	TITLE	PAGE
1	MANAGEMENT ALTERNATIVES FOR DEBRIS - MANUFACTURED OBJECTS	30
2	MANAGEMENT ALTERNATIVES FOR DEBRIS - NATURAL/GEOLOGIC OBJECTS	31
3	INTERIM BULK STORAGE FACILITY ACCEPTANCE CRITERIA	A-11

LIST OF ATTACHMENTS

ATCH	TITLE	PAGE
A	CATEGORIZATION AND DISPOSITION	A-1
B	PROJECT WASTE IDENTIFICATION AND DISPOSITION (PWID) FORM	B-1

RECORD OF ISSUE/REVISIONS

DATE	REV. NO	DESCRIPTION AND AUTHORITY
12-14-93	0	Procedure for controlling and minimizing waste produced by construction and/or maintenance project, required per Request No. P91-028, initiated by S. Lund.
01-31-94	1	Major revision to reflect changes implementing RA17 W.P. concepts, responsibilities and procedure, per Request No. S93-299, initiated by T. Weese.

1.0 PURPOSE

This procedure provides criteria for identifying and categorizing disposition options for excess soil, debris, and waste materials from a project. The procedure provides instructions for planning the appropriate management and disposition of these materials from the planning stages of the project up to project implementation (field work) into the appropriate Fernald Environmental Management Project (FEMP) material management system.

2.0 SCOPE

This procedure is directly applicable to excess soil, debris, and waste generated from the following interim activities and projects at the FEMP:

- Removal Actions and any interim activities when use of the procedure is referenced in the work plan
- Construction projects and new facilities
- RCRA closures
- Large scale and non-routine maintenance projects
- Emergency response actions after the Emergency has been mitigated
- The Operable Unit 3 (OU3) Interim Record of Decision (IROD)

This procedure is not applicable to post-Record of Decision (post-ROD) activities.

Approved U.S. EPA and Ohio EPA work plans may have precedence over some requirements provided herein.

This procedure does not apply to RI, FS, Treatability and Geotechnical studies, Investigative Activities or Sampling and Analysis activities. These activities will be managed as Investigation-Derived Wastes as per U.S. EPA guidance (Figure 1).

In general, this procedure will not apply to routinely or continuously generated waste streams during routine maintenance.

3.0 DEFINITIONS

3.1 Material Types

Bulk Materials - Materials to be managed in bulk form. They include solid materials in tanks/bins, surface impoundments, piles, storage pads, containment buildings, or other bulk material management facilities. Also includes bulk materials collected or transported in bulk material containers such as roll-off boxes or other bulk waste collection/transportation equipment. Bulk materials do not include materials managed in the onsite containerized material inventories.

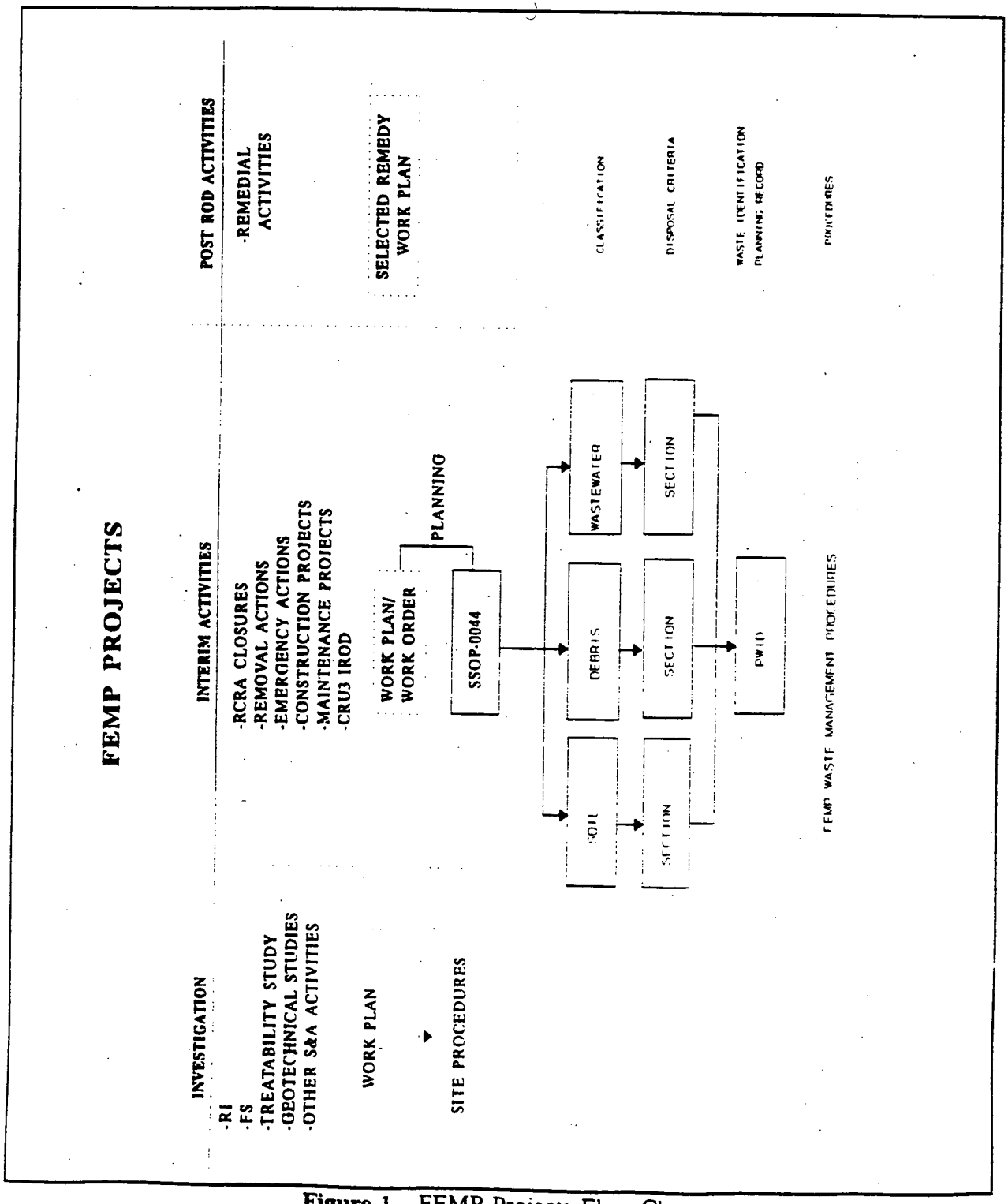

Figure 1 - FEMP Projects Flow Chart

3.0 **DEFINITIONS** (cont.)

Non-contaminated Construction Waste - Construction waste materials from construction activities that, if handled appropriately, can be surveyed and released out of the project boundaries or offsite as a non-radioactive waste. Examples include, but are not limited to, packaging from new material or excess building material from a new construction site such as drywall, piping, insulation, etc.

Containerized Materials - Materials intended for management in containerized form. Includes materials managed in drums, wood boxes, white metal boxes, and ISO (Sea/Land-type) containers. Containerized materials includes all materials managed in the onsite containerized material inventories.

Continuously or Routinely Generated Waste Materials - Waste streams generated such as from activities such as oil changes, light bulb ballasts replacements, or from FEMP facilities such as Plant 8 and General Sump, Advanced Waste Water Treatment (AWWT) facility, etc.

Debris - Solid materials that exceed a 60 mm (2.5 inch) particle size and are manufactured objects, plant or animal matter, or natural geologic material except for the following: process residuals (e.g., unmilled magnesium fluoride [MgF_2]) and residues from the treatment of waste, wastewater, sludges, or air emission residues; intact containers of hazardous waste that are not ruptured and retain at least 75% of their original volume; and certain hazardous waste for which EPA has promulgated specific treatment standards under 40 CFR Part 268, Subpart D. Debris is defined in 40 CFR 268.2(g).

Excess Soil - Soil generated from a project that can not be returned to an excavation utilized within the project boundaries or has not been identified in the work scope to be utilized for a specific use.

Hazardous Debris - Debris, as defined above, that contains listed hazardous wastes (either on the debris surface, or in its interstices, such as pore structure), or debris that exhibits a characteristic of hazardous waste.

Hazardous Waste - Waste that is specifically listed as a hazardous waste or exhibits one or more of the hazardous waste characteristics (i.e., ignitability, corrosivity, reactivity, or toxicity) as defined in Chapter 3745-51 of the Ohio Administrative Code (OAC) and 40 CFR 261.

In situ soil - Soil in its original or natural position (i.e., prior to any excavations or disturbance).

Mixed Waste - Waste containing both radioactive and hazardous components as defined by the Atomic Energy Act and RCRA, respectively.

3.0 DEFINITIONS (cont.)

Radioactive Waste - Solid, liquid, or gaseous material that contains radionuclides regulated under the Atomic Energy Act of 1954, as amended, and of negligible value considering costs of recovery. Surface contaminated materials with radiation limits above DOE Order 5400.5 limits are considered radioactive waste. Surface contaminated materials include metals and other non-porous matrices where the radioactive contamination is limited to the surface of the material and where all surfaces of the material that could have been contaminated can be monitored. Volume contaminated materials that have added radioactivity from DOE activities are also considered radioactive waste. Volume contaminated materials include materials with porous matrices and other materials for which the radioactive contamination is not necessarily limited to the surface or materials where all surfaces that could have been contaminated can not be monitored.

Recoverable Metals - Metals that are radiologically and/or chemically contaminated and can be processed for unrestricted release or controlled reuse. Generally, this category includes all metal that does not have the Refuse Metal characteristics.

Refuse Metal - Metal that is radiologically and/or chemically contaminated or suspected of radioactive contamination and is either excessively oxidized or else separation of the metal from other materials is not cost effective. Evaluation of the cost effectiveness requires a comparison of the cost of managing the material as a refuse considering the regulatory status of the material as a mixed waste or low level radioactive waste.

Regulated Asbestos Containing Material (RACM) - Material that contains greater than one percent asbestos and is either friable or has a high probability of becoming friable by the forces expected to act on it during demolition or renovation operations.

Regulated Polychlorinated Biphenyls (PCBs) - Those PCBs and PCB items that are subject to the disposal requirements of 40 CFR 761 Subpart D. PCBs and PCB items become subject to disposal requirements under subpart D when they have been determined to no longer serve their intended purpose and are to be disposed of. Unregulated items such as intact, non-leaking small capacitors and drained and triple rinsed PCB contaminated equipment are not subject to Subpart D disposal requirements and, therefore, are not included in this definition.

Soil - Unconsolidated earth material composing the surficial geologic strata, consisting of clay, silt, or gravel size particles (sizes as classified by the U.S. Soil Conservation Service). Soil may also include roots, grasses, weeds, or leaves, and a mixture of unconsolidated earth material with other liquids, sludges or solids that are inseparable by simple mechanical processes.

3.0 DEFINITIONS (cont.)

Waste - Materials that have been discarded by virtue of being abandoned, recycled, or considered inherently waste. This includes materials that are accumulated, stored, or treated before or in lieu of being disposed, burned or incinerated. Waste materials may be composed of solids, liquids, or containerized gases. (OAC 3745-51-02 and 40 CFR 261.2)

Wastewaters - Aqueous wastes intended for management in the FEMP wastewater treatment facility. Wastewaters are wastes that contain less than 1 percent (1%) by weight total organic carbon (TOC) and less than 1% by weight total suspended solids (TSS). Wastewaters must meet the acceptance criteria for management in the onsite wastewater treatment system.

3.2 **Terminology/Definitions**

Area of Contamination (AOC) - An AOC may be established if it is estimated prior to the start of excavations or once excavations are complete for a project, that large quantities of excess soils remain that are known (through known spills or sampling and analysis data) to contain hazardous waste and it would prove inappropriate and not feasible (due to the large quantity of soil) to eventually store this excess soil in an improved storage structure.

Design-Engineering-Construction (DEC) Team - A project team led by the Project Engineer (PE) and consisting of individuals matrixed to represent several divisions within FERMCO, including but not limited to, Environmental Safety and Health, Construction, Engineering, Remedial Support Operations (which must include Waste Programs Management department representative), Public Affairs, Regulatory Programs, Recycling Programs, Quality Assurance, and the Architect/Engineer (also a subcontractor, if applicable).

NOTE: The PE leads the DEC Team during planning/design phase and again during project closeout phase while the Construction division representative will typically lead DEC Team during project implementation phase (field work) of the project to provide effective project interface and continuity.

Interim Record of Decision (IROD) - CRU3 proposed work plan for interim remedial actions for Operable Unit 3 (OU3) prior to obtaining the final OU3 ROD from the US EPA.

Project Boundaries - The physical areas in which all project activities take place as defined in the project drawings and specifications and/or work plan. This may include specified laydown areas and other staging areas.

3.0 DEFINITIONS (cont.)

Radiological Storage Administrative Levels - Established levels of radioactivity concentrations, (in pCi/g) used to determine storage requirements. The activity concentrations of 100 pCi/g for total Uranium, 5 pCi/g activity concentration for total Radium, and 50 piC/g activity concentration for total Thorium are the levels that have been accepted by the US EPA as part of the approval of the Removal Action 17 Work Plan. These activity concentrations are applicable for both soil and debris.

NOTE: These are not final cleanup standards, only management levels that will be used to determine interim storage disposition at the FEMP.

Record of Decision (ROD) - Final remedial decision that will establish cleanup standards and treatability methods to use.

Removal Action (RA) 17 Work Plan - This RA is identified in the Amended Consent Agreement between the US DOE and the US EPA (September 1991) for the improved storage of soil and debris generated at the FEMP. The approved RA work plan (Rev. No. 2) provides a sitewide management concept and implementation strategy for improved storage of excess soil and debris by implementing controls on existing and future soil and debris piles both prior to completed construction (Phase 1) and then upon completed construction (Phase 2) of three improved storage facilities and containment of the soil and rubble pile north of 3rd Street.

Resource Conservation and Recovery Act (RCRA) - The congressional act that established safe and environmentally acceptable management practices for specific hazardous wastes. RCRA requires strict "Cradle to Grave" control, documentation, and proper management of hazardous wastes.

RCRA Closures - The act of securing a Hazardous Waste Management Unit (HWMU) pursuant to the requirements in Chapter 3745-55 of the OAC and 40 CFR 264.

3.3 Management/Storage Facilities

Central Storage Facility (CSF) - One of the containment Tension Support Structures (TSS) in the scope of RA 17 that will store contaminated soil and nonrecoverable debris. Materials will be segregated within this facility based on type of contaminant (e.g., inorganic hazardous waste, organic hazardous waste, PCB, asbestos, petroleum, radioactive).

Commercial/Industrial Landfill - Disposition option for noncontaminated, nonhazardous debris (i.e., debris that is only regulated as solid or residual solid waste).

3.0 DEFINITIONS (cont.)

Decontamination Facility Pad (DFP) - One of the containment TSS to be utilized for staging contaminated scrap metal/debris prior to decontamination at the FEMP Decontamination & Decommissioning (D&D) Facilities.

Nevada Test Site (NTS) - One of the disposition options for storing low level waste that is included in the FEMP Application to Ship Waste to the NTS.

Permitted Storage Facility - EPA-approved storage facility (either onsite or offsite) that is permitted to store regulated waste (i.e., hazardous waste, asbestos, or PCBs).

Scrap Metal Pad (SMP) Structure - One of the containment TSS utilized for storing contaminated scrap metal until the material is ready for decontamination, recycling, treatment, or packaging for final disposal.

Scrap Wood Pile (SWP) - Designated pile(s) at the FEMP used for centralized packaging of radiologically contaminated wood that meet the waste acceptance criteria for shipment to NTS.

Trash Bailer - Centralized packaging and volume reduction facility for radiologically contaminated trash.

NOTE: Future engineered interim storage facilities (similar to the CSF) currently being proposed may be used as they become available.

3.4 **Documents and Forms**

Containerized Waste Checklist - A document for a specific container of waste that is used to validate the contents of the container against the physical characterization criteria noted in the completed MEF. Contents are validated by visual inspection and results noted on the checklist.

Material Evaluation Form (MEF) - The document that identifies unique waste streams for management at the FEMP. A completed MEF establishes a "waste profile" that identifies requirements for managing materials that match the profile. SSOP-0002 describes the use of the MEF for waste characterization.

Project Waste Identification and Disposition (PWID) Form (Attachment B) - The form utilized for planning and disposition of excess soil, debris, and waste from a project.

3.0 DEFINITIONS (cont.)

Project-specific Sampling and Analysis Plan (PSAP) - The plan used for collecting samples for purposes of waste characterization.

Request for Sampling and Analysis (RSA) Form - The form used to request sampling and analysis in support of waste characterization. This form identifies the materials to be sampled, the sampling objectives, the parameters for analysis, the associated analytical support level (ASL), and the sampling approach to be utilized.

4.0 RESPONSIBILITIES

4.1 Project Engineer

- Coordinates with the Waste Management Department of RSO managers to ensure that a RSO Waste Management Lead (RSO WML) Representative, Waste Characterization (WC) Representative and Quality Control (QC) Representative are matrixed to the project DEC team.

- Coordinates with Construction Division Manager to ensure a Construction Management Team Representative (CMTR) is matrixed to the project during the planning/design phases of the project.

- Completes the PWID form by identifying and categorizing the types of excess soil, debris, and waste materials anticipated from the project.

- Ensures that the contaminant assessment and disposition options have been objectively selected for the excess soil, debris, and waste material anticipated from the project in accordance with RA 17 work plan management concepts and most recent regulatory guidance.

- Coordinates with the Environmental Safety & Health (ES&H) representative matrixed to the project DEC team to identify any contamination concerns.
- Coordinates with the project DEC Team to ensure that any possible waste avoidance is accomplished throughout all phases of the project.

- Coordinates with the RSO WML and the CMTR to ensure that all excess materials and wastes are properly stored and/or dispositioned in accordance with the PWID, related site procedures and requirements, packaging procedures (if applicable), and regulatory guidelines at the completion of field activities in order to incorporate this information into the project closeout and final reporting documentation.

4.0 **RESPONSIBILITIES** (cont.)

- Provides concurrence along with the WC representative on the Request for Sampling and Analysis Form, that may be required to complete waste characterization.

- Consults with WC representative to ensure that soil designated as excess debris, and waste material that may remain after the project field activities, will be properly characterized through MEF verification forms, and sampling and analysis (if applicable), to ensure the appropriate interim storage or final disposition location will be chosen.

- Ensures that a Quality Assurance (QA) representative has been matrixed to the project DEC team in the planning stages of the project.

- Initiates a new MEF for waste streams not previously listed on an MEF at the FEMP.

4.2 RSO Waste Management Lead (RSO WML)

- Provides technical consultation and assistance to the Project Engineer (PE) in the completion of the PWID form for categorizing waste and estimating waste quantities.

- Coordinates with CMTR and PE to plan and facilitate the proper storage and disposition of all expected excess soil, debris and waste materials according to the information as listed on the PWID and or project-specific work plan.

- Identifies the type of waste containers required (notifies MC&A) for the disposition location selected by the DEC Team for all waste materials generated from the project, both offsite and onsite.

- Notifies PE if, as a result of field activities, a new waste stream category has been discovered that was not previously anticipated or identified in the PWID form.

- Provides necessary assistance to the PE for updating the PWID form following any changes to the anticipated wastes, actual waste generated, or changes in disposition options previously selected.

4.0 RESPONSIBILITIES (cont.)

4.3 Waste Characterization (WC) Representative

- Performs a contaminant assessment of the project areas and wastes anticipated based on the compilation of any process knowledge (PK) and/or any previous or project-specific sampling and analysis data/results that may be available in the specific project area or for the waste categories identified in the PWID.
- Identifies the presence of any RCRA contaminants in the project area through MEF verification process.
- Assists in the completion of the PWID form.
- Verifies that the MEFs are consistent with the waste categories identified in the PWID.

4.4 Construction Management Team Representative (CMTR)

- Assists in the completion of the PWID form.
- Contacts RSO WML and PE if either an unidentified or a new waste stream (not identified on the PWID form) has been discovered as a result of field activities.

5.0 GENERAL

None

6.0 PREREQUISITES

- In order to confirm knowledge of soil, debris, and waste categorization and disposition options, read Attachment A before continuing with Section 7.0 (Procedure).

7.0 PROCEDURE

7.1 CONDUCTING THE SITE WALKDOWN

PE, ES&H representative, RCT, CMTR, RSO WML and WC representative

1. Conduct project site walkdown.

RCT

a. Perform radiological field survey of project area.

WC

b. Visually inspect project area to assess any noticeable signs of contamination.

PE, RSO WML, CMTR and ES&H representative

c. Observe site accessibility and boundaries, surrounding physical characteristics and note special safety concerns/hazards.

7.2 ESTIMATING QUANTITIES OF EXCESS SOIL, DEBRIS, AND WASTE MATERIALS

NOTE: It is important that the PE, CMTR, RSO WML and others within the DEC Team utilize prudent measures during design and planning stages to **minimize or eliminate** potential excess soil as a result of the project (i.e., compaction, topsoil reuse, balance cut and fill, etc.). Minimization of the generation of soil wastes can be obtained by returning the excavated soil to its source where applicable (see Figure 3, Soil Management Plan Flow Diagram). Refer to Attachment A, Section 1.1 of this procedure to clarify categorization and Attachment A, Section 2.1 for clarifying disposition options.

NOTE: Construction contracts and/or work plans will include instructions to subcontractors/field work forces to uncrate packaging used for shipping in clean areas and limit the tools and equipment brought into controlled areas to minimize waste generation. These waste types shall not be estimated as part of the total waste streams identified on the PWID.

7.2 ESTIMATING QUANTITIES OF EXCESS SOIL, DEBRIS, AND WASTE MATERIALS (cont.)

PE

1. Forward a copy of initial radiological survey reports and RCRA field screening data obtained from the project site walkdown to WC representative.

2. Complete the PWID form (Attachment B) by coordinating with the CMTR and RSO WML to estimate quantities of excess soil, construction debris, and other wastes to be generated as a result of project activities.

3. Consult the FEMP Build-Over policy to define the "Temporary" versus "Permanent" nature of any structures erected as defined in project scope. See Section 3.3 of the RA 17 Work Plan for implications with regard to soils management.

WC representative

4. Review any process knowledge (PK) and existing sampling analysis results pertaining to the area and identify any existing MEFs that correspond to the waste categories identified on the PWID form.

   a. If an MEF is currently on file for <u>all</u> the anticipated debris, waste materials, and excess soils as a result of the project, the WC representative completes the MEF verification forms for each stream identified on the PWID form and the PWID shall be considered complete.

   b. If there is no existing MEF for a waste type identified on the PWID form, a contaminant assessment must be performed for those waste types. The steps taken to perform the contaminant assessments is outlined in Section 7.3.2 for **soils** and Section 7.5.2 for **debris** and **waste**.

PE

5. Sign and obtain other approval signatures on the PWID form.

7.2 ESTIMATING QUANTITIES OF EXCESS SOIL, DEBRIS, AND WASTE MATERIALS (cont.)

6. Proceed to Section 7.4 for soils and/or Section 7.6 for debris and waste materials to establish disposition options.

NOTE: At this stage of planning, the PE, RSO WML, WC representative, QA Representative, and CMTR shall develop a waste container matrix that identifies the waste container (if applicable) and sequencing for the removal of the waste streams (if possible) to be utilized for anticipated excess soil, debris, and waste materials generated as a result of the project activities.

(See example of Waste Container Matrix (Figure 2) on the following page)

FOR THE REMAINDER OF THIS PROCEDURE, REFER TO SECTIONS 7.3, 7.4, FOR SOILS AND SECTIONS 7.5, 7.6 FOR DEBRIS AND WASTE MATERIALS

7.3 PLANNING SOIL MANAGEMENT AND DISPOSITION PLANNING OF EXCESS SOIL

[SEE FIGURE 3, SOIL MANAGEMENT PLAN FLOW DIAGRAM - PHASES I AND II]

7.3.1 For all anticipated soil categories that are already identified under existing MEFs, the Project Engineer, WC representative, and RSO WML can determine the disposition options.

1. Proceed to Section 7.4 for interim soil disposition options (refer to Attachment A, Section 2.1 - Excess Soil Disposition Options).

7.3.2 Perform a contaminant assessment for all anticipated soil categories that do not have existing MEFs. The following steps must be taken in order to perform a contaminant assessment.

PE

1. Provide any relevant information regarding the soil being evaluated, complete the requestor section of the new MEF, and submit to WC representative.

Fermco Environmental Restoration Management Corporation

"TYPICAL" WASTE CONTAINER MATRIX

				CONTAINERS				
TASK	WASTE STREAM	TYPE			ISO CONT		Rubble	
	PWID		ISO	White	Construction	Barrels	White	RCRA
			Containers	Boxes	Debris	(55 Gal.)	Box	Material
Salvageable	Temp Xfloor's							
Material	Electrical Dolly's							
	Water Hose							
	Clothing-FERMCO							
	HEPA Units							
	HEPA Vacuums							
	Construction Tools & Equipment							
ASBESTOS REMOVAL								
	Wood framing				x			
	Poly				x			
	Piping Insulation		x					
	Floor tile		x					
	Floor tile adhesive		x					
	Equipment Insulation		x					
	Water Filters		x					
GROSS DECON								
	Waste water(TO TEMP HOLDING TANK)							
	Lead Chips							x
	Dirt					x		
Construction Debris								
	Surfactant Containers			x				
	PPE	Gloves				x		
	PPE	Tyvex				x		
	PPE	Respirator Cartridges				x		

Figure 7 - Example of Waste Container Matrix

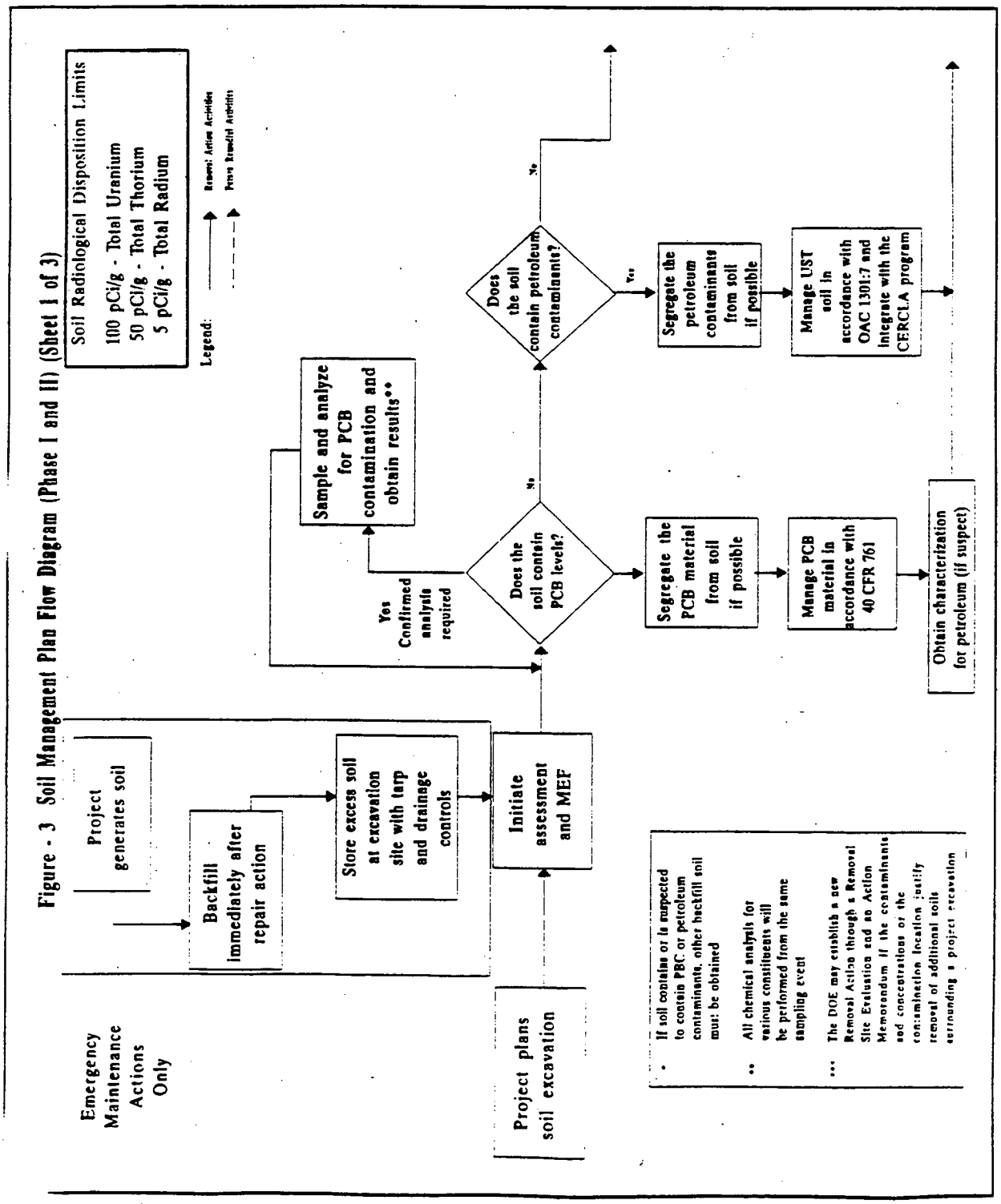

Figure 3 - Soil Management Plan Flow Diagram (Phase I and II) (Sheet 1 of 3)

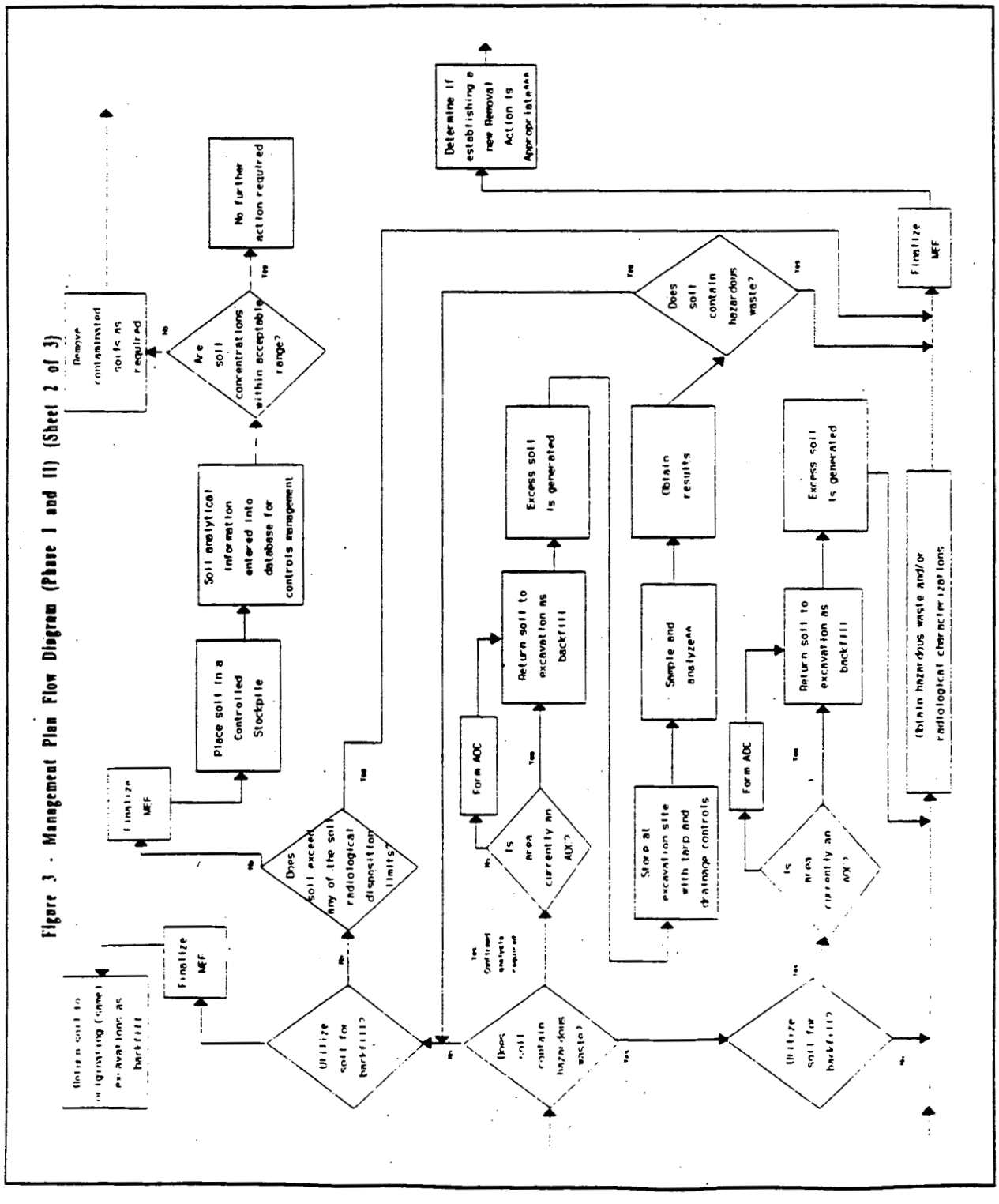

Figure 3 - Management Plan Flow Diagram (Phase I and II) (Sheet 2 of 3)

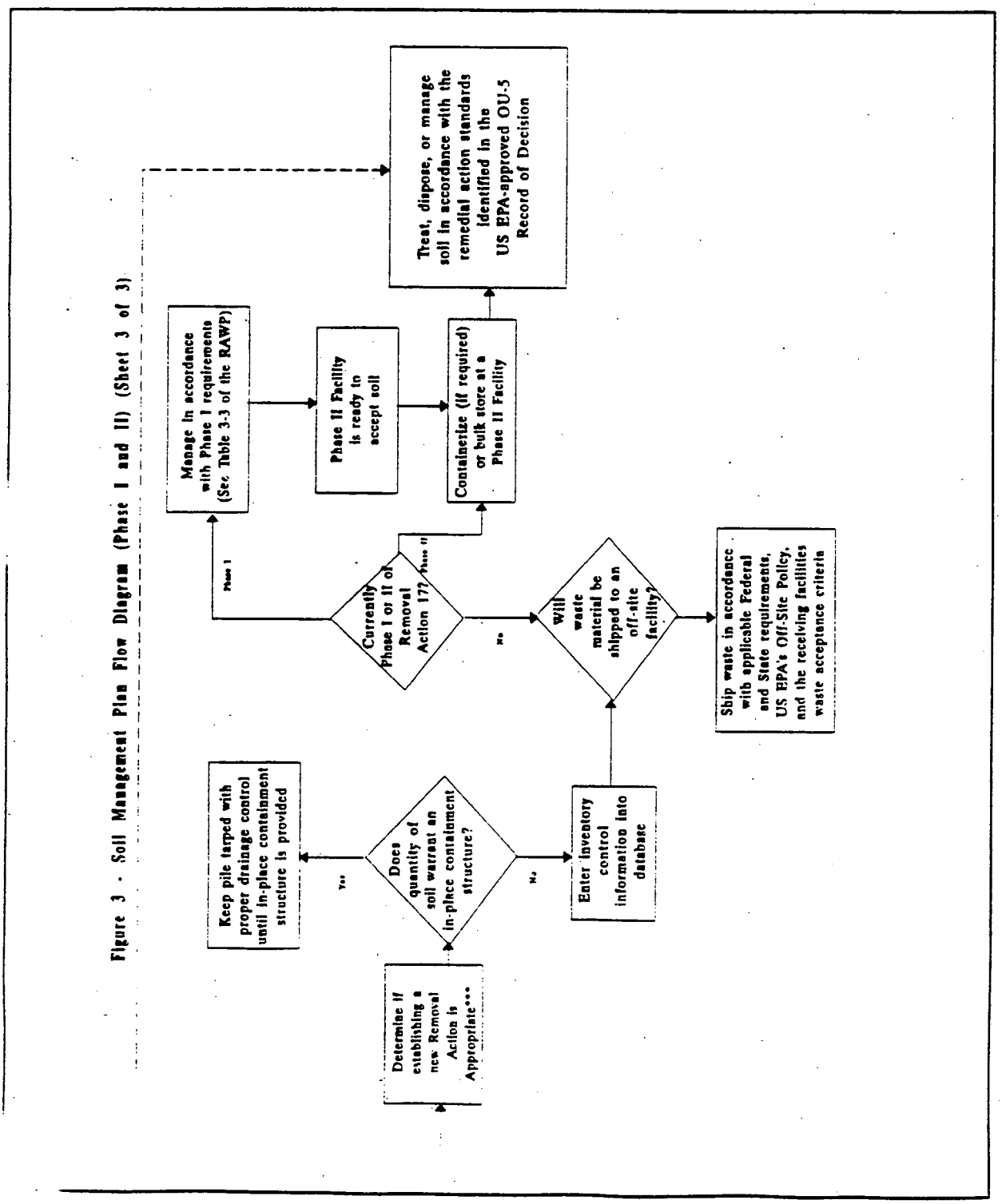

Figure 3 - Soil Management Plan Flow Diagram (Phase I and II) (Sheet 3 of 3)

7.3 PLANNING SOIL MANAGEMENT AND DISPOSITION PLANNING OF EXCESS SOIL (cont.)

WC representative

2. Review all available data and PK on file to complete the evaluation.

3. Complete the MEF per SSOP-0002 and submit to the PE.

PE

4. Review new MEF, add the waste quantity to the PWID and identify the soil disposition.

   NOTE: The newly completed MEF for the soil category will dictate one of the following management options as described in Attachment A, Section 2.1 of this procedure:

5. If the in situ soil, by PK, sampling analysis results, or physical visual evidence, contains or is suspected of containing PCBs, these excavated soils must be staged apart from other soil piles and, if possible, the PCB material should be segregated from the soil.

6. If the in situ soil, by PK, existing sampling analysis results, or physical evidence, contains or is suspected of containing petroleum contaminants, these excavated soils must be staged apart from other soil piles and the petroleum material, if possible, should be separated from the soil.

7. If the in situ soil, by PK, existing sampling analysis results, or physical evidence, contains known RCRA hazardous contamination or originated from closure of a HWMU, the following steps should be taken:

   a. Determine if the soils to be excavated (or the project site itself) are or have been previously declared an Area of Contamination (AOC);

7.3 PLANNING SOIL MANAGEMENT AND DISPOSITION PLANNING OF EXCESS SOIL (cont.)

PE

(1) If in an AOC, the soils excavated can be returned to the originating excavation.

(2) If not in an AOC, the Project Engineer, with CRU Manager concurrence, must assess the feasibility of managing the soils based on the quantity of the contaminated soils to be excavated.

NOTE: For significant quantities of hazardous soil, an AOC should be established (notification to US EPA and Ohio EPA required). For a small quantity of soil, contaminant assessment on affected excavations only.

b. AOC Determination Prior To Start of Field Work: If prior to start of project PE, with CRU management concurrence, has determined that the project area should be considered an AOC this determination must be conveyed to the US and Ohio EPAs in writing per RA 17 Work Plan.

8. If none of the conditions apply to the newly formed MEF for the soil in steps 5 through 7 above (i.e., no RCRA constituents, No HWMU sources, PCB contamination, or petroleum contamination in these soils and none suspected, and there are no high radiological concerns), this soil will be categorized under the existing MEF for Category I or II Radiologically contaminated soils (Category I or II determined in field by the use of beta/gamma friskers at the time of excavation) that may be either staged in a controlled stockpile onsite or staged beside the excavation and utilized for backfill as appropriate. The contamination assessment can be determined on this basis and field activities can proceed without sampling.

NOTE: If excess topsoil or excavated soil remain from the controlled stockpiles mentioned in item 4 above, these piles will be managed according to the disposition option chosen in the PWID or by results of sampling and analysis if required by WC representative.

7.4 INTERIM SOIL STORAGE OPTIONS (See Attachment A, Section 2.1)

NOTE: The determination to containerize, store in a controlled stockpile, or store in an improved storage facility for an excess soil must be based on the completed PWID, a completed MEF, or a contaminant assessment conducted by WC representative.

WC representative

1. Verify and ensure all MEFs are properly established for the soils generated before the disposition options are considered.

WC representative, PE and RSO WML

2. Assess the interim storage options of excess soil (i.e., soil remaining at the completion of the project) based on the identified contaminants and quantities in the PWID form and the options for the categories listed in Attachment A, section 2.1.

   NOTE: The WC representative may require that a MEF, which was completed based on a contaminant assessment process, must be verified through sampling and analysis of the excess soil remaining after completion of project or at the time when the actual disposition option must be implemented.

WC representative

3. Once sampling and analysis or further PK is confirmed by the WC representative, the WC representative will then complete a MEF verification form.

   NOTE: If a soil category has been generated from field activities that was not previously accounted for on the PWID, the WC representative may require verification of the MEF through the contaminant assessment process or sampling and analysis as described in step 2 above.

7.4 INTERIM SOIL STORAGE OPTIONS (See Attachment A, Section 2.1) (cont.)

PE

4. Inform WC representative of any changes to the original quantities and types of wastes in the soils specified in the PWID that have been actually generated from field activities.

WC representative, PE, and RSO WML

5. Refer back to Steps 2 and 3 above in order to assess interim storage options of the unanticipated (i.e, not in the PWID) or newly identified soil category.

PE

6. Notify RSO WML to arrange for the appropriate storage requirements (containers, laydown areas, staging areas, etc.) as determined in the steps above and the categories of soils generated. Generally these arrangements/requirements will include:

   a. During Phase I - Staged in a controlled stockpile for the OU of its origin.

      NOTE: Separate controlled stockpiles will be formed for Category I radiologically contaminated excess soils (to be used for backfill within that OU), Category II radiologically contaminated soils, and other RCRA or contaminant-specific controlled stockpiles for that OU.

   b. During Phase II - Bulk stored or containerized in the CSF or similar containment structure for excess soils KNOWN to be RCRA or exceeding the Radiological control limits (Category II).

7. With concurrence from Project Manager, may establish an AOC during project if most of the soils actually encountered during excavation activities were found to contain or be hazardous and/or exceed the radiological administrative limits.

7.4 INTERIM SOIL STORAGE OPTIONS (See Attachment A, Section 2.1) (cont.)

PE

a. If a large quantity of RCRA hazardous soils or Category II soils is encountered (determined either by sampling, radiological frisking in field, or visual inspection), the PE, with CRU management concurrence, may establish a new AOC and maintain these soils for in-place containment, utilizing tarps and other control measures, until further remediation is determined (i.e., New Removal Action, OU3 or OU5 ROD).

8. Establish a new Removal Action, if applicable.

a. Begin management processes involved with preparing basis for the need of a another Removal Action (RSE, RA Work plan, etc.) as a result of the contaminants discovered from the project.

7.5 PLANNING DEBRIS AND WASTE MATERIALS MANAGEMENT AND DISPOSITION PLANNING OF DEBRIS AND WASTE MATERIALS

[SEE FIGURES 4 & 5, DEBRIS MANAGEMENT PLAN FLOW DIAGRAM (PHASE I AND PHASE II)]

7.5.1 For all anticipated debris and waste materials that are identified in the PWID under existing MEFs, the Project Engineer, WC representative, and RSO WML can determine the disposition options (see Section 2.2 of Attachment A) or reference the project specific work plan for disposition instructions.

7.5.2 For all anticipated debris and waste materials that do not have existing MEFs the following steps must be taken in order to perform a contaminant assessment:

PE

1. Provide any relevant information regarding the material being evaluated, complete the requestor section of the new MEF, and submit to WC representative.

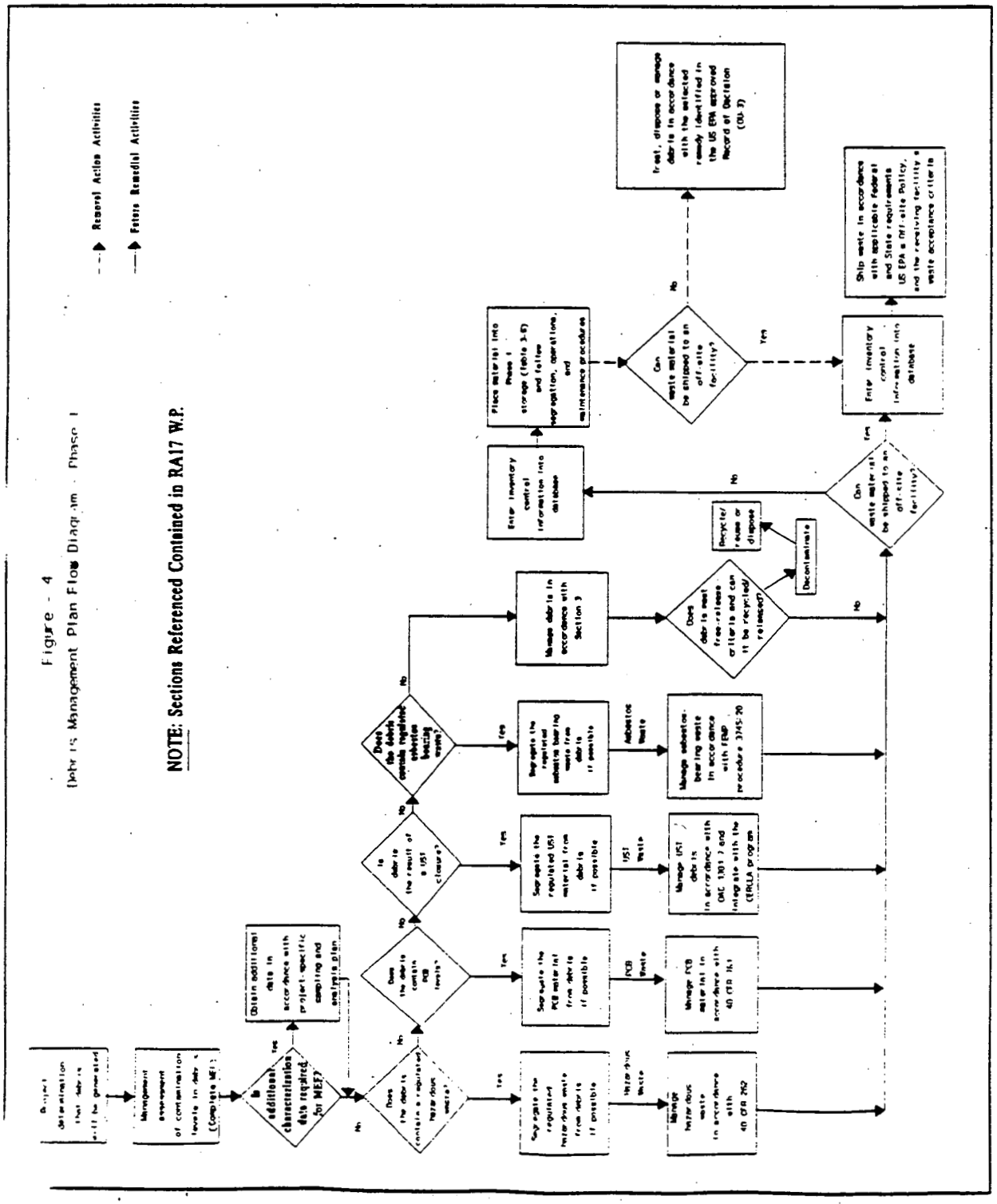

Figure 4 - Debris Management Plan Flow Diagram - Phase I

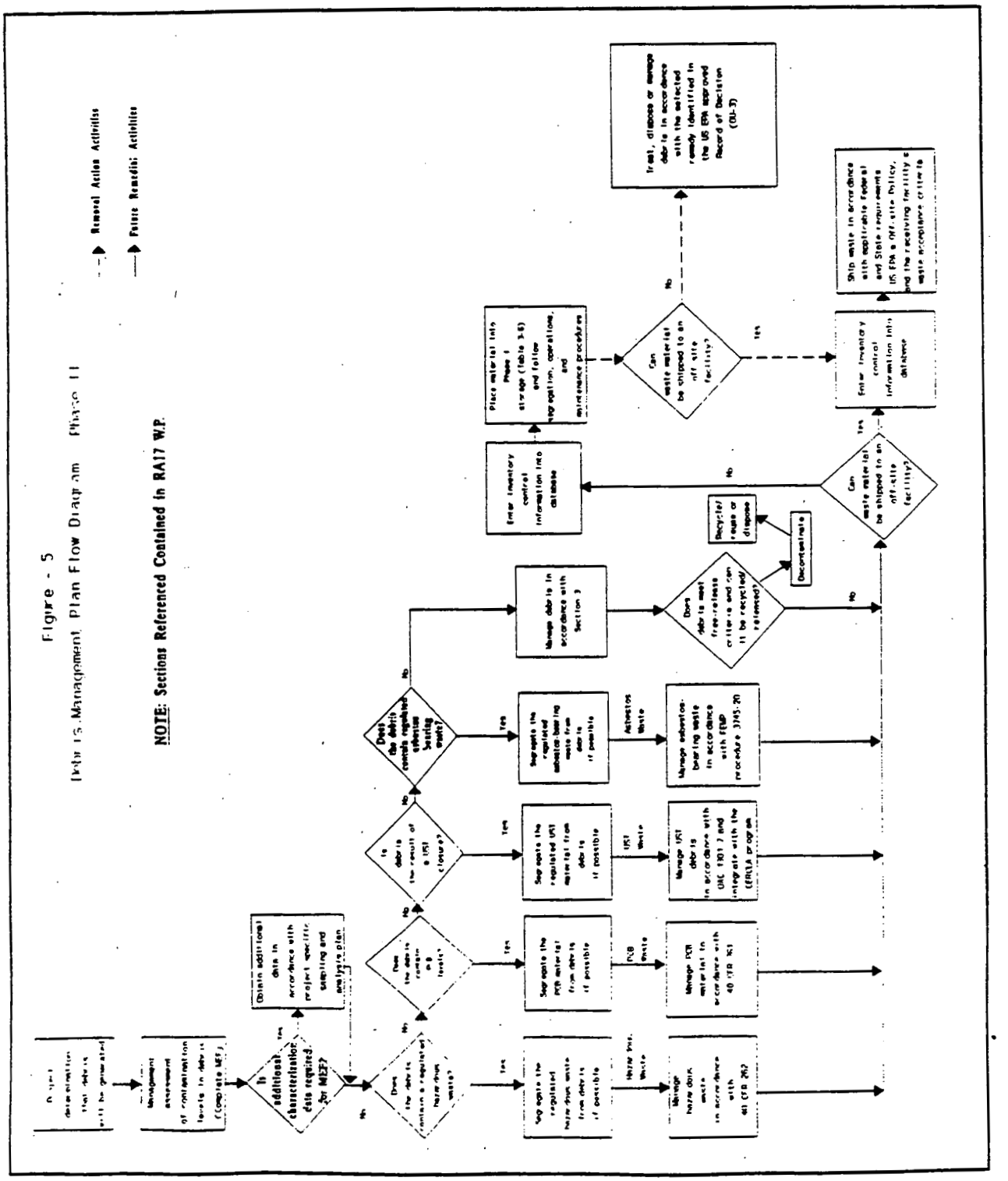

Figure 5 - Debris Management Plan Flow Diagram - Phase II

7.5 PLANNING DEBRIS AND WASTE MATERIALS MANAGEMENT AND DISPOSITION PLANNING OF DEBRIS AND WASTE MATERIALS (cont.)

WC representative

2. Review all available data and PK on file to complete the evaluation.

3. Complete the MEF per SSOP-0002 and submit to MEF to the PE. The WC representative completes MEF according to SSOP-0002.

4. If additional characterization data required to complete a new MEF:

   a. Obtain additional data by completing the RSA and require analysis in accordance with the PSAP.

   b. Obtain results from sampling and complete MEF per SSOP-0002.

   NOTE: For large scale Dismantling and Decommissioning projects, most storage and disposal options will already be determined according to the project specific work plan.

7.5.3 If the debris or waste, by PK, existing sampling analysis results, or physical evidence, contains or is suspected to contain PCBs, these waste materials/debris should be staged apart from other waste materials/debris and the PCB material should be segregated from the debris if possible.

7.5.4 If the debris or waste, by PK, existing sampling analysis results, or physical evidence, contains petroleum contaminants, these waste materials/debris must be staged apart from other debris piles and the petroleum material should separated from the debris if possible.

7.5.5 If the debris or waste, by PK, existing sampling analysis results, or physical evidence contains RCRA-hazardous waste, these waste materials/debris must be staged apart from other debris piles and the hazardous waste be separated from the debris if possible.

7.5 PLANNING DEBRIS AND WASTE MATERIALS MANAGEMENT AND DISPOSITION PLANNING OF DEBRIS AND WASTE MATERIALS (cont.)

WC representative

7.5.6 If the debris or waste, by PK, existing sampling analysis results, or physical evidence contains asbestos bearing wastes, these waste materials/debris must be staged apart from other debris piles and must be managed according to Ohio Administrative Code (OAC) 3745-20, "Asbestos Handling, Demolition Renovation, Disposal".

NOTE: See Table 1 and 2 for Debris Disposition Planning.

7.6 INTERIM DEBRIS/WASTE STORAGE OPTIONS (See Attachment A, Section 2.2)

NOTE: The determination to containerize, place in a controlled stockpile, or store in an improved storage facility for the debris/waste material must be based on the completed PWID, a completed MEF, or a contaminant assessment conducted by WC representative.

WC representative

1. Verify and ensure that all MEFs are properly established for the wastes and debris generated before the disposition options are considered.

NOTE: This may require a MEF that was completed based on a contaminant assessment process be verified through sampling and analysis of the debris or waste material after it has been generated from field activity or at the time when the actual disposition option must be implemented for interim storage.

WC representative, PE, RSO WML

2. Assess the interim storage options of the debris or waste material based on the identified contaminants and quantities in the PWID or by the options described for the categories in Attachment A, Section 2.2.

Table 1 - Management Alternatives for Debris - Manufactured Objects

	Packaging Alternatives		Storage Alternatives		Disposition Alternatives	
Debris Category	At Point of Generation	Staged then to Central Packaging Facility	Interim Bulk Storage	Interim Containerized Storage	Offsite for disposal or reuse	Onsite or As defined in Work plan
Metal for Decontamination	X		X			X
Metal for Remelt	X		X			X
Non-recoverable metal	X			X	X	X
Scrap Wood	X			X	X NTS	X
Glass, Paper, Cardboard, Plastic, non-hazardous PPE	X	X If compactable		X	X Commercial landfill/ Recycle	
Asphalt, Concrete, Bricks	X		X			X CSF,Stockpile
Regulated Asbestos Containing Material (RACM)	X			X	X	X
Non-regulated ACM	X			X	X NTS	
Non-contaminated, non-hazardous debris	X			X	X Commercial Landfill	
PPE contaminated with regulated waste		X		X	X CSF	
Debris containing hazardous waste or regulated as PCB item	X If HW not separable	X If HW separable		X CSF		X

- Decontamination Facility Pad.
- Scrap Metal Pad.
- Nevada Test Site.
SWP - Scrap Wood Pile.
[5]CSF - Central Storage Facility for soil and debris.

Table 2 - Management Alternatives for Debris - Natural/Geologic Objects

	Management Alternative(s)				
Debris Category	Shredder/ Chipper	Habitat Enhancement	Erosion Control	Interim Bulk Storage	Disposition Defined in Work Plan
Trees	X	X	X		X
Shrubs	X	X			X
Rocks			X		X
Chemical or Radiologically contaminated trees, shrubs, rocks				CSF[1]	X

[1]CSF - Central Storage Facility

7.6 INTERIM DEBRIS/WASTE STORAGE OPTIONS (See Attachment A, Section 2.2) (cont.)

WC representative

3. Once sampling and analysis or further PK is confirmed by the WC representative, the WC representative will then complete a MEF verification form.

   NOTE: If a debris or waste material category has been generated as a result of field activities that was not previously accounted for on the PWID, the WC representative may require verification of the MEF through the contaminant assessment process or sampling and analysis as described in step 2 above.

CMTR

4. Inform PE and RSO WML of any changes to the original quantities and types of wastes in the soils specified in the PWID that have been actually generated from field activities.

WC representative, PE, and RSO WML

5. Refer back to Steps 2 and 3 above in order to assess interim storage options of the unanticipated (i.e, not in the PWID) or newly identified debris category.

6. Determine, with consultation from WC representative, if the debris or waste material can be free-released or recycled.

   a. If free-release or recycling is possible, contact the recycling department to determine most feasible option.

PE

7. Inform RSO WML/CMTR to arrange for the appropriate storage requirements (containers, laydown areas, staging areas) and plan for one of the following debris storage options:

   a. Packaged for disposal at the point of generation to an approved offsite facility.

7.6 INTERIM DEBRIS/WASTE STORAGE OPTIONS (See Attachment A, Section 2.2) (cont.)

PE

b. Staged in bulk in a controlled covered stockpile until offsite shipment can be arranged (PHASE I).

c. Staged in bulk in an improved storage facility until decontamination can be performed (PHASE II).

d. Containerized in an improved storage facility for eventual offsite shipment (PHASE II).

e. Packaged for offsite shipment for recycling.

f. The disposition option outlined in the Work Plan and project performance specifications and drawings.

g. Packaged for shipment to commercial/industrial landfill.

8.0 APPLICABLE DOCUMENTS

8.1 DRIVERS

- U.S. DOE, FMPC, and US EPA 1991 Consent Agreement as Amended Under CERCLA Sections 120 and 106(a).
- DOE Order 5400.5, "Radiation Protection of the Public and the Environment"
- DOE Order 5480.11, "Radiation Protection of the Occupational Workers"
- Title 40 CFR, Parts 260, 261 - "Resource Conservation and Recovery Act", 268, and 300 - "Comprehensive Environmental Response Compensation Liability Act"

8.2 REFERENCES

- Removal Action 17 Work Plan - Improved Storage of Soil and Debris, Revision No. 2, February 1993
- SSOP-0002, "Initiating Waste Characterization Activities Using the Material Evaluation Form (MEF)"
- Project/Construction Waste Management procedure

CATEGORIZATION AND DISPOSITION

1.0 Categorizing Materials

Materials generated from projects at the FEMP may be broadly categorized as excess soils, debris, waste materials, and wastewaters. Materials within each of these categories have distinct requirements for segregation/management/disposition. The following sections discuss the criteria for categorizing specific types of materials within each of these four general categories.

1.1 Excess Soils

NOTE: Beta-gamma friskers may be used only for screening soil for Uranium contamination. Quantitative analysis must be performed by other analytical techniques. Beta-gamma friskers can not be used to detect administrative limits of Thorium or Radium as the levels are below the minimum detectable activity of the instrument.

In the planning stages of projects, many in situ soils, especially topsoils, will be assumed to potentially exceed the radiological storage administrative levels (greater than 100 pCi/g U, etc.) at least in some areas where excavations will occur. Soils determined (through PK) to be only radiological contaminated will be managed throughout the project based on the field surveys conducted during the excavations with beta/gamma friskers. Note that the proper use of beta/gamma friskers to verify radiological levels requires procss knowledge of the radionuclides of concern (i.e., U, Th, Ra)

Excavated soils will be stockpiled within project boundaries throughout all field activities into staging areas. Soils determined radiologically contaminated above the administrative levels (based on results using beta/gamma friskers in the field) will be staged separately from soils determined to be below the radiological administrative levels (i.e, not detected by the beta/gamma friskers). All excavated soils staged on the project site are required to be tarped. Only non-radiologically contaminated soil (below the radiological administrative levels) from these staging areas can be borrowed from and utilized for backfill throughout construction activities within the project boundaries if the project site is NOT regarded as an AOC. Soils from a site that has already been classified as an AOC may be used as backfill from staging areas within the designated AOC project boundaries. Upon completion of the project, if any or all of these staging area stockpiles still exist, it is only then that excess soil quantities can be identified.

Measures such as compaction, topsoil reuse, balance of cut and fill, and other means possible to return soil to the original area of excavation shall be employed to minimize quantities of excess soils. Soils that cannot be minimized in one of these ways will need to be managed as excess soils.

Excess soils at the FEMP fall into one of several categories depending on their radiological and chemical composition. The criteria for classifying specific soils into one of the general categories are discussed in the subsections that follow.

1.1.1 Category I Radiologically Contaminated Soils

Excess soils may be classified as Category I soils when they contain equal to or less than 100 pCi/g total U, equal to or less than 5 pCi/g total Ra, and equal to or less than 50 pCi/g total Th. In addition, Category I soils may not contain any hazardous waste or PCBs, or be contaminated with petroleum products. (Typically MEF# 2503)

CATEGORIZATION AND DISPOSITION

1.1.2 Category II Radiologically Contaminated Soils

Category II rad contaminated soils are defined as those soils which contain greater than 100, 5, or 50 pCi/g total U, Ra, or Th, respectively. (Typically MEF #2504). Category II soils which contain hazardous waste or PCBs, or are contaminated with petroleum products are not included under this category, but are categorized according to their chemical contamination as discussed below.

1.1.3 Soils Containing Hazardous Waste

Soils that contain hazardous waste are classified under this category. Soils may be determined to contain a hazardous waste by virtue of either containing a waste material which causes the mixture of soil and waste to exhibit one of the hazardous waste characteristics, or containing a waste which meets the description of a listed hazardous waste. Note that the presence of listed hazardous waste constituents does not mean that the soils necessarily contain a listed hazardous waste. In order for soils to be determined to contain a listed hazardous waste there must be sufficient objective evidence to demonstrate that the constituents came from a listed hazardous waste, a mixture of a listed hazardous waste and a solid waste, or were derived from a listed waste source (e.g., a treatment residual).

Disposition options will reflect the need to segregate these materials in interim storage facilities based on the radiological composition and the type of hazardous waste which they contain.

1.1.4 PCB Contaminated Soils

This category includes soils contaminated with regulated PCBs. Excavated soils in an area where there exists process knowledge of a previous PCB spill, or the appearance of an oily substance is discovered, must be removed and isolated by tarps or containerized for staging until characterization can be performed.

1.1.5 Petroleum Contaminated Soils

Soils contaminated with a petroleum product, but which do not contain hazardous waste or PCBs are classified under this category. Limits for benzene, toluene, xylene, ethyl benzene, and total petroleum hydrocarbons (TPH) apply to petroleum contaminated soils from Underground Storage Tank (UST) removals, in accordance with OEPA policy, "The Division of Solid and Hazardous Waste Management Policy on Petroleum Contaminated Soils".

ATTACHMENT A

CATEGORIZATION AND DISPOSITION

1.2 Debris

Debris at the FEMP falls into general categories depending on the physical form and matrix of the debris and the radiological and chemical contamination. Some of the categories are described below for clarity. (See the PWID form)

NOTE: Some types of debris may continue to exhibit the Toxicity Characteristic. Examples include certain metal alloys containing chromium such as stainless steel. For example; certain high chromium stainless steels, if included with all demolition debris, would be deemed hazardous waste if a representative sample of the debris exhibited a hazardous waste characteristic. However, if the stainless steel is removed and segregated prior to the demolition activities, the stainless steel could be managed separately by recycling it as scrap metal and would be exempt from further regulation.

1.2.1 Scrap Metal

Scrap metals are divided into two general categories; refuse and recoverable. Recoverable scrap metals are further divided into two subcategories; recyclable and reusable. Disposition of the materials can only be identified once the materials are appropriately categorized. Appropriate segregation into these categories will facilitate the most cost effective and timely final disposition of scrap metal waste. Scrap metal can be identified as those materials which meet the criteria of the scrap metal checklist contained in SOP 20-C-625.

Recoverable Metal: Metal which can be radiologically and/or chemically decontaminated or processed for release for use off site. Decontamination may occur onsite or at offsite locations. Disposition of metal for decontamination in this manner helps support FEMP waste volume reduction objectives by reducing the amount of material that must be managed as regulated waste.

Examples of metal for decontamination include: structural steel, Juice (UO_3) Hoppers, rolling mill components, and bulk storage tanks.

Metal for Recycle: Radiologically contaminated metals may be remelted for beneficial reuse in applications where the dose associated with the recycled (e.g., remelted) metal is negligible compared to the dose associated with the application where the remelted metal is used. For example, remelted metals may be cast into shielding blocks, rolled into metal sheets for fabrication of waste disposal containers, or reformed into structural steel or other building materials (e.g., rebar) for use in radioactive material management facilities (e.g., an engineered waste management facility).

Metals for recycle must be free from non-metallic materials (e.g., plastic/rubber fittings, gaskets, etc.).

Examples of metal for remelt include: pipes, conduits, process equipment (e.g., pumps), and other thin gauge metals.

Refuse Metal: Generally non-recoverable metals that are not categorized as metal for decontamination or metal for recycle/reuse. This type of debris will generally be prepared for disposal.

Examples of refuse metals include: metal attached to other materials, extremely rusted metals, etc.

1.2.2 Scrap Wood

In order to be managed as low level waste, scrap wood must meet the criteria specified on the scrap wood checklist contained in SOP 20-C-625. Examples of common types of scrap wood at the FEMP include: pallets, packaging materials, concrete formwork, and two-by-four framing.

1.2.3 Plastic, Paper, Rubber, Cardboard, Fiberglass, Rope, Non-Hazardous PPE

Generated routinely from construction projects at the FEMP. These items must meet the criteria on the completed checklist contained in SOP-C-625.

1.2.4 Asphalt, Bricks, Non-Hazardous/Non-Radioactively Contaminated Concrete

Consult with WC representative to determine which MEF number is applicable for the asphalt, concrete, and brick waste that may be generated (as listed on the PWID).

1.2.5 Regulated Asbestos Containing Materials (RACM)

Suspected ACM needs to be evaluated by the Asbestos Program Coordinator to determine if it is ACM. If it is ACM, then its condition needs to be assessed to determine if it is Regulated ACM (RACM). If it is RACM, then it must be packaged and disposed as such.

1.2.6 Non-Regulated and/or Stabilized ACM

Evaluation by the Asbestos Program Coordinator of asbestos content and condition. Will be verified through the results obtained from stabilization study for transite.

1.2.7 Electrical Equipment

Includes ordinary light fixtures (without the ballasts) including incandescent bulbs, dry-type transformers, conduit, wire and cable, panelboards, and switches. EXCLUDES FLUORESCENT LIGHT TUBES OR ANY GAS TUBES/BULBS, TRANSFORMERS, PANELBOARDS WITH MERCURY SWITCHES.

CATEGORIZATION AND DISPOSITION

1.2.8 PPE or Other Trash Contaminated with Regulated Waste

Consult with WC representative to determine which MEF number is applicable for contaminated versus non-contaminated PPE (as listed on the PWID).

1.2.9 Debris Containing Hazardous Waste or Regulated as a PCB Item

Debris that fails criteria for other categories must be evaluated individually to determine if it contains hazardous waste or is regulated as PCB items. It is documented via the MEF verification process and managed accordingly.

1.2.10 Trees, Shrubs and Rocks

Excavated trees and shrubs will be stockpiled within project boundaries throughout all field activities. The trees and shrubs can be used during construction for habitat enhancement throughout the FEMP site or shredded and chipped for mulch. Any excess rocks can be stockpiled and used where necessary for erosion control. At any time, if it is determined that the stockpiled trees, rocks (over 60 mm in size), or shrubs are to be discarded or intended for eventual discard, they shall be managed as debris.

1.2.11 Chemically or Radioactively Contaminated Trees, Shrubs, and Rocks

Any trees, shrubs or rocks that have been characterized by Waste Characterization (through sampling and analysis) to be subject to management as low level radioactive and/or chemically contaminated will be stored, in some form, in the CSF or approved hazardous material storage area. Trees and shrubs shall be reduced in size to make storage more manageable.

1.3 Wastewaters

Wastewaters generated during various projects require an evaluation for several factors; 1) to ensure the NPDES permit and other CWA regulations are complied with; 2) what type of treatment can be provided through other FEMP waste water treatment system; and 3) what , if any, notifications are required for obtaining agency approval for discharge. Consult with a representative from the Regulatory Technical Support (RTS) department of the Regulatory Programs division for completing the PWID if wastewater discharges during projects are anticipated.

The PE and DEC team must determine the following information and provide it to the RTS representative:

1. Quantity of wastewater anticipated during disposition.
2. Frequency of generation.
3. Source of the wastewater (decontamination water, stormwater from excavations, etc.)

ATTACHMENT A

CATEGORIZATION AND DISPOSITION

With this data, the project DEC team and RTS representative will develop a list of contaminants of concern identifying the necessary analytical data used to determine whether a discharge can be made; and, if allowed, the discharge sequence. Knowledge of how the wastewater became generated is important in this process of determining the contaminants of concern.

Existing data on wastewaters generated during a prior characterization may be used for this determination. However, all analytical results must be in "totals" (as opposed to TCLP or soluble portions).

1.3.1 Non-Hazardous, Low Organics/No Metals, Wastewater Media:

For the purposes of this section and this procedure, low organics is defined as all organics measured above detection are less than 100 ppb. "No metals" is defined as none of the Clean Water Act (CWA)/RCRA Toxic Metals, have been detected above the detectable levels.

1.3.2 Non-Hazardous, No Organics/Low Metals, Wastewater Media:

For the purposes of this section and this procedure, low metals is defined as less than 100 ppb for all of the CWA/RCRA toxic metals except for Cr, Cu, and Ni. These levels are 27, 90, and 42 ppb respectively. "No Volatile Organic Compound (VOCs)" is defined as non-detection at an analytical detection limit of at least 10 ppb.

1.3.3 Non-Hazardous, Low Organics/Low Metals, Wastewater Media:

* Wastewater meeting the criteria in 1.3.1 and 1.3.2 may be discharged to General Sump.

* Wastewater exceeding the criteria for VOCs in 1.3.1 must be discharged to Plant 8 VOC treatment system.

* Wastewater exceeding the criteria for metals in 1.3.2 but meeting the VOC criteria must be discharged such that treatment through the Plant 8 Filtration system is required.

* Wastewater exceeding both the VOC and metals criteria must be discharged to the Plant 8 VOC treatment system.

  NOTE: Effluent from the Plant 8 VOC treatment system is pumped directly to the Plant 8 filtration system.

1.3.4 Wastewater/Media Containing Listed Waste, Organics

This category must be handled on a case-by-case basis.

1.3.5 Wastewater/Media Containing Hazardous Waste, TC Metals

This category must be handled on a case-by-case basis.

1.3.6 Wastewater/Media Containing Hazardous Waste, TC Organics

This category must be handled on a case-by-case basis.

2.0 IDENTIFYING DISPOSITION OPTIONS

The following subsections identify discriminators for selecting management alternatives and/or disposition options for materials identified in this Attachment generated from FEMP projects. The mechanism for moving materials into the management system and the acceptance criteria for the selected management facility are also identified.

2.1 Excess Soil Disposition Options

2.1.1 Phase I R.A. 17 Disposition Options

NOTE: Phase I (according to RA 17 work plan) addresses storage options prior to completed construction of the 3 Improved Storage Structures; CSF, SMP, DFP).

- **Cover With Tarp and Extend security fence around pile**
  For soils that exceed the radiological administrative levels (greater than 100 pCi/g total Uranium, greater than 5 pCi/g total Radium or greater than 50 pCi/g total Thorium) and are not suspect of/or not known (through analytical sampling results) to contain hazardous waste (See 1.1 under "Categorizing Materials")

- **Controlled stockpiles**
  For soils that do not exceed the radiological administrative levels and are considered non-hazardous. This criterion is verifiable by the completion of the MEF verification form by the WC representative through analytical data or if sufficient objective PK has been provided.

- **Containerize and Store in Hazardous Waste storage area/facility**
  For soils containing PCBs or soils known to contain hazardous waste (supported by analytical results).

- **UST Soils pile**
  For soils known to be contaminated with petroleum products (See 1.1.5 under "Categorizing Materials")

- **Establish AOC/Provide Engineered Cover in-place**
  These options apply if it is estimated prior to the start of excavations or once excavations are complete for a project, that large quantities of excess soils remain that are known (through known spills or sampling and analysis data) to contain hazardous waste and it would prove inappropriate and not feasible (due to the large quantity of soil) to eventually store this excess soil in an improved storage structure. The decision to determine the quantities of excess soil considered too large for storage (i.e., determine the area to be an AOC) in an improved storage facility will be made on a case-by-case basis by PE, the RSO WML, and the project manager. The establishment of an AOC will require USEPA and Ohio EPA concurrence.

2.1.2 Phase II (Removal Action 17) Disposition Options

NOTE: Phase II (according to RA 17 Work plan) addresses storage options and soil/debris management from the time improved storage structures are completed until the final ROD.

- **Central Storage Facility (CSF)**
  Bulk and containerized storage of soil and debris that exceed the radiological administrative action levels or contain other regulated wastes.

- **Maintain in Controlled Stockpile**
  Excess soils from projects that do not exceed the radiological action levels and do not contain regulated wastes will be transferred to a designated controlled stockpile within the AOC where the excess soil originated. These stockpiles are covered with tarps to ensure physical access is limited (bounded with fencing, if one is not already in place). Drainage controls shall be established around the pile to minimize run-on and provide runoff controls from these controlled stockpiles.

CATEGORIZATION AND DISPOSITION

2.2 Debris Disposition Options

2.2.1 Package for Disposal at Point of Generation

Based on the information provided in the PWID, if the disposition of certain waste streams, as well as the size and type of container to be used is already known, the waste packaging may occur at the point of generation if it proves to be a safe and prudent method of packaging.

2.2.2 LLW Packaged for Disposal at NTS

The RSO WML shall provide and coordinate the transport of the appropriate approved containers for packaging debris. All packaging shall be completed in accordance with the SSOP(s) for packaging of low-level radioactive wastes for offsite shipment to NTS. RSO shall provide for the transfer of containers from the FEMP staging areas to the project staging areas for shipment preparation. The waste management goal is to provide just-in-time (JIT) inventory for NTS shipments (i.e., to package and transfer materials for shipment without the need for interim storage).

<u>NOTE</u>: For large scale Dismantling and Decommissioning projects, most of the interim storage options mentioned below are not feasible. Most of the wastes generated from these actions, specifically non-RCRA and Low Level Radioactive Wastes, will be packaged at the generation point for shipment to a DOE-approved facility or for recycle/reuse as specified in the project-specific work plans or contract documents with the dismantling subcontractor.

2.2.3 Non-contaminated, Non-hazardous Debris for Industrial Landfill

Non-contaminated, non-hazardous debris (many compactable wastes) are placed into clean construction waste containers (dumpsters) for disposal at a commercial or industrial landfill. When appropriate, a lockable clean waste container shall be staged in the vicinity of the project site. This area should also be monitored using radiological control personnel and instrumentation to ensure background levels are low enough to permit release surveys in that area.

2.2.4 Central Processing/Packaging Facility

Certain debris may be managed more efficiently in a centralized packaging/processing facility when either one of two conditions is met: 1) the debris is amenable to processing onsite to reduce the volume or toxicity or to improve its physical or chemical form for disposal (e.g., compaction or stabilization), or 2) the material is generated at a sufficiently slow rate that labor-hours and equipment resources are more efficiently deployed at a central location. The central packaging/processing facility will be utilized for any project generating less than 1/2 White Metal Box (3 cubic yards) of debris per week or less than a total of 1 WMB total debris over the life of the project.

RSO or subcontractor forces shall provide roll-off boxes for transfer of the material from the point of generation to the central packaging/processing location. Use of roll-off boxes (in lieu of WMBs) eliminates confusion as to whether debris is in transit or packaged appropriately for disposal.

NOTE: Hazardous debris would be limited to a 90 day accumulation period under this scenario.

2.2.5 Interim Bulk Storage Facilities

RSO or subcontractor shall provide personnel and equipment for transfer of debris to interim bulk storage facilities. **This option is particularly applicable to RCRA contaminated debris that cannot be shipped offsite.** Roll-off boxes shall be used for the transfer of bulk materials. Debris being transferred to an interim bulk storage facility must meet the acceptance criteria for that facility. Materials that do not meet the acceptance criteria of a specified interim bulk storage facility shall be returned to the point of generation for appropriate disposition. Non-conformance to the acceptance criteria shall be documented to collect an appropriate data set for trends analysis and process improvement. Table 1 identifies the acceptance criteria for receiving materials into specific interim bulk storage facilities.

2.2.6 Scrap Metal Pad (SMP) tension support structure

Storage of scrap metal prior to decontamination or offsite shipment

2.2.7 Decontamination Facility Pad (DFP) tension support structure

Staging of contaminated metal/debris prior to decontamination or recycling.

Table 3 - Interim Bulk Storage Facility Acceptance Criteria

Interim Bulk Storage Facility	Acceptance Criteria
Decontamination Facility Pad (DFP)	Metal must not be excessively rusted and not have areas of inaccessible contamination. Material must conform to the metals checklist criteria of SOP 20-C-625.
Scrap Metal Pad (SMP)	Metal must conform to the metals checklist criteria of SOP 20-C-625.

2.2.8 Central Storage Facility (CSF)

Bulk and containerized storage of radioactively contaminated (confirmed through sampling and analysis above the radiological administrative levels) and/or hazardous (confirmed through sampling and analysis) soil and non-recoverable debris.

2.2.9 Interim Containerized Storage Facility

RSO or subcontractor shall provide for transfer of containerized debris requiring storage in an interim container storage facility. Containers will not be transferred to a container storage facility or accepted into a container storage facility without either a completed checklist or a completed MEF and MEF Inventory Attachment. Refer to procedure SOP 20-C-625 for directions on use of checklists. Refer to procedure SSOP-0002 for instructions on completing the MEF and MEF Inventory Attachment.

2.2.10 Disposition Specified in the Project Work Plan

Disposition options for specific types of debris may be called out in the Project Work Plan (e.g., a specific Removal Action Work Plan). These project-specific alternatives will generally be specified to accommodate special handling requirements or to support technology demonstration projects.

2.3 Wastewater Disposition Options

The primary impacts of wastewater discharges is a function of mass loading (mass loading = flow times (x) concentration). Consultation with the RTS representative must occur to determine if the threshold volumes are to be generated as a result of the project.

2.3.1 Non-Hazardous, Low Organics/No Metals, Wastewater Media:

This type of wastewater may be discharged to General Sump. If any VOC measures above 100 ppb, then treatment through the Plant 8 VOC treatment system is required. Large volumes of wastewater with VOCs above 100 ppb may require special disposition.

2.3.2 Non-Hazardous, No Organics/Low Metals, Wastewater Media:

Wastewater meeting these criteria may be discharged to General Sump. Wastewater exceeding these criteria must be discharged so that they are routed to the Plant 8 filtration system.

2.3.3 Non-Hazardous, Low Organics/Low Metals, Wastewater Media:

Wastewater meeting the criteria in 1.3.1 and 1.3.2 may be discharged to General Sump.

Wastewater exceeding the criteria for VOCs in 1.3.1 must be discharged to Plant 8 VOC treatment system.

Wastewater exceeding the criteria for metals in 1.3.2 but meeting the VOC criteria must be discharged such that treatment through the Plant 8 Filtration system is required.

Wastewater exceeding both the VOC and metals criteria must be discharged to the Plant 8 VOC treatment system.

NOTE: Effluent from the Plant 8 VOC treatment system is pumped directly to the Plant 8 filtration system.

2.3.4 Wastewater/Media Containing Listed Waste, Organics

Discharged to the Plant 8 VOC treatment system, regardless of concentration.

2.3.5 Wastewater/Media Containing Hazardous Waste, TC Metals

Disposition must be handled on a case-by-case basis.

2.3.6 Wastewater/Media Containing Hazardous Waste, TC Organics

Disposition must be handled on a case-by-case basis.

ATTACH[illegible] B (Sheet 1 of 4)

PROJECT WASTE IDENTIFIC[illegible] AND DISPOSITION (PWID) FORM

[illegible]eneral

Project Title:	**Date of Original PWID:**	**Current Revision:**
Project Location: **CRU:**	**Project Engineer/Phone #:**	

Summary Project Description:

Additional detail provided in: __ **Work Plan** __ **Work Order** __ **Other, specify:** _____

B. Excess Soils - Identification and Disposition

Excess Soil Type	Volume (m^3)	Weight (kg)	Characterized By	Disposition By
1. Non-RCRA, Equal to or less than 100 pCi/g U, (Cat. I) (SSOP-0044, Section 1.1.1)			MEF Number 2503	
2. Non-RCRA, Greater than 100 pCi/g U (Cat. II) (SSOP-0044, Section 1.1.2)			MEF Number 2504	
3. Soils Containing Hazardous Waste - TC Metals			MEF Number AAAA	
4. Soils Containing Hazardous Waste - TC organics			MEF Number BBBB	
5. Soils Containing Hazardous Waste - listed waste (SSOP-0044, Section 1.1.3)			MEF Number CCCC	
6. Soils Containing PCBs (SSOP-0044, Section 1.1.4)			MEF Number DDDD	
7. Soils Contaminated w/Petroleum Products (SSOP-0044, Section 1.1.5)			MEF Number EEEE	
8. Soils, specify:			MEF Number FFFF	

000397

6989

ATTACHMENT B (Sheet 2 of 4)

PROJECT WASTE IDENTIFICATION AND DISPOSITION (PWID) FORM

C. Debris - Identification and Disposition

Debris Type	Volume (m^3)	Weight (kg)	Characterized By	Disposition By
1. Scrap metal for decontamination (SSOP-0044, Sec. 1.2.1)			SOP 20-C-625, MEF # 1088 and Scrap Metals Checklist	
2. Scrap metal for recycle (SSOP-0044, Sec. 1.2.1)			SOP 20-C-625, MEF # 1088 and Scrap Metals Checklist	
3. Scrap metal for disposal (SSOP-0044, Sec. 1.2.1)			SOP-20-C-625, MEF # 1088 and Scrap Metals Checklist	
4. Scrap wood (SSOP-0044, Sec. 1.2.2)			SOP-20-C-625, MEF # 905 and Scrap Wood Checklist	
5. Plastic, rubber, paper, fiberglass, rope (SSOP-0044, Sec. 1.2.3)			SOP-20-C-625, MEF # 1539 and Completed Checklist	
6. Glass (SSOP-0044, Sec. 1.2.3)			SOP-20-C-625, MEF # 1284 and Completed Checklist	
7. Concrete, Non-hazardous, Radiologically Contaminated (SSOP-0044, Sec. 1.2.4)			MEF Number 2007	
8. Concrete, Non-hazardous, Non-Radiologically Contaminated (SSOP-0044, Sec. 1.2.4)			MEF Number 2512	
9. Asphalt, Non-hazardous, Radiologically Contaminated			MEF Number 2136	
10. Asphalt, Non-hazardous, Non-Radiologically Contaminated (SSOP-0044, Sec. 1.2.4)			MEF Number GGGG	
11. Bricks, (furnace, acid)			MEF Number HHHHH (furnace) MEF Number IIII (acid)	
12. Regulated Asbestos Containing Material (friable) (SSOP-0044, Sec. 1.2.5)			MEF Number 1340	
13. Non-regulated Asbestos Containing Material (non-friable) (SSOP-0044, Sec. 1.2.6)			MEF Number JJJJ	
14. Electrical Equipment (wire, conduit, light, switches, etc.) (SSOP-0044, Sec. 1.2.7)			MEF Number 2008	
15. Debris Containing Hazardous Waste (SSOP-0044, Sec. 1.2.9)			Appropriate MEF	
16. Debris regulated as PCB Items or Article (SSOP-0044, Sec. 1.2.9)			MEF Number KKKK	

000398

ATTAC[illegible] B (Sheet 3 of 4)

PROJECT WASTE IDENTIFI[illegible] AND DISPOSITION (PWID) FORM

D. [illegible]sidues and Other Waste - Identification and Disposition

Residue/Waste Type	Volume (m^3)	Weight (kg)	Characterized By	Disposition By
1. Lead based paint chips/scrapings			MEF Number 817	
2. Wood, Railroad Ties, Non-hazardous, Radiologically contaminated			MEF Number 2136	
3. Trees, shrubs, rocks (SSOP-0044, Sec. 1.2.10)			MEF Number LLLL	
4. Others, specify:				
5. Others, specify:				
6. Others, specify:				
7. Others, specify:				

E. Waste Waters - Identification and Disposition - (IDW)

Aqueous Waste Type	Volume (l)	Weight (kg)	Characterized By	Disposition By
1. Aqueous waste which contains a listed VOC. (SSOP-0044, Sec. 1.3)			MEF Number MMMM	
2. Aqueous waste containing VOCs above 100 ppb (SSOP-0044, Sec. 1.3)			MEF Number NNNN	
3. Aqueous waste with no VOC or VOC below 100 ppb (SSOP-0044, Sec. 1.3)			MEF Number 2493	
4. Aqueous wastes which contain listed metals and F-Listed constituents			MEF Number 2498	
5. Others, Specify:				
6. Others, Specify:				
7. Others, specify:				

000399

6989

ATTACHMENT B (Sheet 4 of 4)
PROJECT WASTE IDENTIFICATION AND DISPOSITION (PWID) FORM

F. Approvals		
1. Project Engineer:	Date:	Comments:
2. RSO Waste Programs Management:	Date:	Comments/Special Instructions:
3. Waste Characterization:	Date:	Comments:
4. Radiological Control:	Date:	Comments:
5. Waste Management Coordinator:	Date:	Comments:

6989

CONTROL NO. _____
SITE PROCEDURE PT-0008 (PP-0314)
REVISION NO. 0

PACKAGING, ON-SITE MOVEMENT AND OFF-SITE SHIPMENT OF MATERIAL

NON-CONTROLLED COPY

Effective Date: 12-20-91

Originator (Subject Expert): _____
Date

Checker Concurrence: _____
Date

APPROVED BY: MLWest. 2/15/95
Michael L. West, Manager of Packaging and Transportation — Date

FERNALD ENVIRONMENTAL MANAGEMENT PROJECT

Fernald Environmental Restoration Management Corporation
P. O. Box 538704
Cincinnati, Ohio 45253-8704

1.0 POLICY

It is the policy of the Westinghouse Environmental Management Company of Ohio (WEMCO) to ensure that the packaging, on-site movement and off-site shipment of hazardous and non-hazardous materials, including radioactive materials, is conducted in a safe manner that provides for the protection of the public and the environment, and is in compliance with the applicable federal, state, and local regulations, Department of Energy (DOE) Orders and Directives, and WEMCO policies and procedures.

2.0 SCOPE

This procedure identifies, defines, and establishes the policies and responsibilities that govern the packaging, on-site movement, and off-site shipment of materials. Provisions of this document are applicable to all WEMCO Sections involved in the packaging, on-site movement, and off-site shipment of non-hazardous materials and hazardous materials, including hazardous substances, hazardous wastes, nuclear, and radioactive materials.

3.0 DEFINITIONS

3.1 Carrier - Any person engaged in the transportation of passengers or property as common, contract, or private charter, or freight forwarder, as defined in the Interstate Commerce Act, as amended, or by the United States Postal Service.

3.2 Consignee - The person or organization designated in the shipping papers to receive a shipment.

3.3 Hazardous Material - A material or substance, including a hazardous substance, which has been determined by the Secretary of Transportation to be capable of posing an unreasonable risk to health, safety, or property during transport.

3.4 Hazardous Substance - A material, including its mixtures and solutions, as defined in 49 CFR 171.8, section 101 (14) and 102 of CERCLA, section 311 (b) (2) (a) of the CWA.

3.5 Hazardous Waste - Any waste material that is designated as hazardous by the Administrator of the Environmental Protection Agency (EPA) in 40 CFR Part 261 and that is subject to the Hazardous Waste Manifest requirements of 40 CFR Part 262.

3.6 Material - For purposes of this procedure, any material classified as non-hazardous items or hazardous materials, including hazardous substances, hazardous wastes, nuclear, and radioactive materials.

3.0 **DEFINITIONS** (cont.)

3.7 Off-Site - All areas outside the main perimeter security fence that are not controlled at all times by guards and security gates.

3.8 On-Site - All areas inside the main perimeter security fence that are controlled at all times by guards and security gates to gain entrance to the Fernald Environmental Management Project (FEMP) Site.

3.9 Package - A packaging plus its contents as presented for transportation.

3.10 Packaging - The assembly of one or more containers and any other components necessary to ensure compliance with the minimum packaging requirements of 49 CFR.

3.11 Radioactive Material - Any material having a specific activity greater than 0.002 microcuries per gram per 49 CFR.

3.12 Radioactive Source - For the purpose of this procedure any source used as a standard for the radiation it emits sealed in a capsule or having a bonded cover in which the capsule or cover is strong enough to prevent contact with, or dispersion of, the radioactive material under normal conditions of use, including a one-meter drop onto an unyielding surface.

3.13 Radioactive Waste - Solid, liquid, or gaseous material that contains radionuclides regulated under the Atomic Energy Act of 1954, as amended, and of negligible economic value when the costs of recovery are considered.

3.14 Shipment Originator - The person, or WEMCO Section, who initiates an on-site movement or off-site shipment of material.

3.15 Waste Originator - Any person, or WEMCO Section, whose operation or process generates hazardous waste, radioactive waste, or a mixed waste.

3.16 Nuclear Material - Collective term that includes all such materials designated by the DOE. A listing of designated nuclear materials may be found in DOE Order 5633.3; however, at the FEMP site, nuclear materials shall mean depleted, normal, or enriched (less than 20% U-235 by weight) uranium or thorium.

4.0 RESPONSIBILITIES

4.1 Centralized Training - Responsible for the proper development of training activities to comply with mandatory training requirements and to enable employees to qualify, requalify, or enhance their ability to perform job duties and tasks. Responsible for appropriate documentation and maintenance of training activities, development of in-house audio/video training aids, providing assistance in the development/section training, maintaining and administering the TRMS', maintaining the TMR, including the maintenance of subcontractor training records supplied to centralized training by technical instructors or by the manager of the contracting department.

4.2 Maintenance/Garage - Responsible for the inspection of inbound carrier vehicles that will be used for outbound shipments, providing for the inspection used for on-site shipments, and the preventative maintenance of all such government vehicles at FEMP, and documenting all maintenance and inspections.

4.3 Radiological Safety - Responsible for conducting radiological surveys of materials, packages, and carrier vehicles that will be used for outbound shipments, documenting results of surveys, and providing copies of the results as required. Radiological Safety is also to be notified so surveys can be performed on all on-site movements of materials.

4.4 Facilities and Warehousing - Responsible for packaging materials for on-site movement, packaging uranium metals, oxides, and related products for off-site shipment, providing support documentation, and assigning the personnel and equipment required for on-site movements, loading off-site shipments, and spotting/loading carrier trailers and freight containers.

4.5 Material Control and Accountability - Responsible for the nuclear materials control and accountability program at FEMP.

4.6 Procurement/Materials Management - Responsible for the review and approval of off-site miscellaneous shipping documentation.

4.7 Analytical Section (of Site Services) - Responsible for providing analytical documentation of material samples and the packaging of samples for off-site analysis.

4.8 Logistics Administration - Responsible for developing and updating transportation related procedures ensuring compliance with all Federal, State and Local regulations, Doe Orders and Directives.

4.0 **RESPONSIBILITIES** (cont.)

4.9 Site-Wide Quality Assurance - Responsible for verifying the packaging processes for uranium metals, oxides, and other related materials and for conducting periodic inspections of packaging operations. Coordinate all required Quality Assurance review activities including conducting annual audits of the packaging and transportation of hazard material shipments.

4.10 Radioactive Source Controller - Responsible for controlling and the coordination of radioactive source for shipment off-site.

4.11 Safeguards and Security - Responsible for the coordination of security and safeguard measures for off-site shipments.

4.12 Shipment Originator - Responsible for preparing documentation of materials for on-site movement or off-site shipment.

4.13 Transportation Safety Committee - Responsible for the evaluation of WEMCO policies and procedures for packaging and transport of all materials, exchange knowledge and experience in resolution of transportation safety problems, uniform interpretation and implementation of Federal, State, and Local regulations, including OSHA safety requirements, DOE Orders, and WEMCO guidelines as applicable to transportation safety.

4.14 Traffic Control - Responsible for providing guidance on the requirements for the on-site movement of hazardous materials. Responsible for preparing bills of lading, coordinating the loading of off-site shipments, and coordinating the scheduling of off-site shipments.

4.15 Waste Originator - Responsible for accumulating and packaging waste for storage or disposal and for making the proper notifications when accumulated wastes must be transported to on-site storage facilities.

4.16 Facilities and Material Evaluation - Responsible for providing assistance to waste generators, arranging for waste sampling, and categorizing waste.

4.17 Waste Operations - Responsible for packaging hazardous and radioactive wastes for off-site shipment.

4.18 Waste Shipping Coordinator - Responsible for preparing and reviewing waste shipment documentation for off-site shipments.

4.19 Waste Shipping - Responsible for preparing waste packages and packaging waste for off-site shipment.

4.0 **RESPONSIBILITIES** (cont.)

4.20 Safe Shutdown - Responsible for controlling order requirements for nuclear materials disposition activities at the FEMP for off-site shipment.

5.0 **GENERAL**

5.1 Sections responsible for the activities assigned herein shall develop implementing procedures, and perform operational and oversight functions that are consistent with internal WEMCO operating policies and procedures.

5.2 Shipment generators for off-site shipments must prepare a nuclear, radioactive, hazardous material/hazardous waste - non-nuclear, or miscellaneous shipping order and have the order processed and approved by the appropriate sections before material will be set up for off-site shipment. In addition, all packages must have been monitored by the Radiological Safety section for removable contamination, radiation levels, per the applicable departmental procedures and provide appropriate documentation to Traffic Control.

5.3 PACKAGING PROVISIONS

Package Description Per Pkg.	Material Description	Authorized Gross Weight
DOT Spec 17C metal 5-gal. drum (DOT 7A Type A)	samples, bulk type radioactive material	100 lbs.
DOT Spec 17H metal 30-gal. drum (DOT 7A Type A)	samples, bulk type radioactive material	500 lbs.
DOT Spec 17H metal 55-gal. drum (DOT 7A Type A)	samples, bulk type radioactive material	900 lbs.
FEMP Family of wooden Boxes DOT 7A Type A:		
Model No. G-4214	uranium metal products	1,260 lbs.
Model No. G-4245	uranium metal products	225 lbs.
Model No. G-4255	uranium metal products	1,470 lbs.
Model No. G-4273-5	uranium metal products	3,045 lbs.
Model No. G-4273-6	uranium metal products	3,540 lbs.
Model No. G-4292	uranium metal products	1,330 lbs.
Strong Tight Containers	LSA Material consigned as exclusive use Limited Quantity Material	Dependent on container per applicable department procedure

5.0 **GENERAL** (cont.)

5.3.1 No special packaging provisions are required for the on-site movement and off-site shipment of nonhazardous miscellaneous materials.

5.3.2 PCB substances which are regulated by the Toxic Substances Control Act (TSCA) and the Clean Air Act (CAA) and shall be controlled the same as RCRA waste material.

5.3.3 WEMCO shall respond to incoming emergency calls concerning an accident involving hazardous materials shipped from the FEMP or in transit in the area, supporting the agency with authority, as requested per FMPC-125, "Emergency Management."

6.0 **PROCEDURE**

6.1 Packaging Operations

CENTRALIZED TRAINING

6.1.1 Approve departmental lesson plans for the personnel in each organization that are involved with the packaging of hazardous materials, hazardous wastes, and radioactive materials.

6.1.2 Verify that the results of lesson plans are documented and that training qualifications records are included in the employee's personnel record and entered into Centralized Training computer files.

ANALYTICAL SECTION (of Site Services)

6.1.3 Analyze the samples to determine the hazardous constituents of the waste.

6.1.4 Document the waste analysis results on the Report of Analysis form.

6.1.5 Provide analytical data to Environmental Management, and the Project Engineer (if requested) for use in characterizing the waste.

6.1.6 Package samples in accordance with applicable Sampling Plan and Departmental procedures. Ensure compatibility of materials in one package meets all criteria of Title 49 CFR, Subpart C, 177.848.

6.0 **PROCEDURE** (cont.)

ANALYTICAL SECTION (of Site Services)

6.1.7 Request that Radiological Safety monitor the samples and packages according to departmental procedures and provide the appropriate documentation.

SITE-WIDE QUALITY ASSURANCE

6.1.8 For all hazardous and radioactive packaging, verifies compliance with regulations, specifications, plans and procedures through review of documentation, witnessing of activities, and examination. Verifies identification of packaged uranium metals, oxide and related products against the Shipping Order for Nuclear Material. Conduct internal and independent audits of the packaging of hazardous materials including hazardous substances, hazardous wastes, and nuclear and radioactive materials according to the appropriate DOE requirements.

6.1.9 Conduct periodic inspections of packaging operations per applicable departmental procedures, to verify compliance with applicable DOT/DOE/EPA regulations, WEMCO policies and procedures, and document inspections.

6.1.10 Verify that radiological surveys have been conducted for materials.

6.1.11 Review radiological survey results and verify that the radiation readings for packages are within the limits established by 49 CFR; document the review on Form FEMP-IRS&T-1993.

TRAFFIC CONTROL

6.1.12 Verify that hazardous material is packaged for off-site shipment according to the applicable Safety Analysis Report for Packaging and Certificate of Compliance supplied by the Traffic Control.

SHIPMENT ORIGINATOR

6.1.13 Verify that personnel have been properly trained to package hazardous materials, hazardous substances, hazardous wastes, and nuclear and radioactive materials.

6.0 **PROCEDURE** (cont.)

SHIPMENT ORIGINATOR

6.1.14 Obtain approval from Nuclear Safety before packaging off-site shipments of enriched radioactive materials to ensure criticality concerns are addressed according to applicable regulations. Verify that each package used for on-site movement or off-site shipment of hazardous materials, hazardous substances, hazardous wastes, nuclear and radioactive materials is correctly assembled and that all components of the packaging are sufficiently secured.

6.1.15 Ensure packaging is free of rust, dents or other conditions making it unsuitable for loading material.

6.1.16 Package non-hazardous materials, hazardous materials, hazardous substances, hazardous wastes, and nuclear and radioactive materials for on-site movement or off-site shipment per applicable WEMCO procedures.

6.1.17 Inspect all hazardous materials packages to verify that it has been packaged properly. Notify supervisor if any defects or deficiencies are detected.

6.1.18 Verify that packaging has the capability that will enable the use of mechanical loading equipment, items may be placed on pallets to meet this requirement.

6.1.19 Verify that a radiological survey has been conducted on all packagings that will be used for the off-site shipment of nuclear or radioactive material before the packaging is used.

NOTE: Packagings that are contaminated above the levels specified in Title 49 CFR 173.443 may not be used for off-site shipments unless they are cleaned or refurbished.

6.1.20 Verify that inner packaging is suitably cushioned in the outer packaging with an adequate quantity of material to prevent breaking and shifting during transport, as directed by Traffic Control.

6.0 **PROCEDURE** (cont.)

SHIPMENT ORIGINATOR

6.1.21 Apply and Verify that all packages for on-site movement or off-site shipping, including samples, are marked and/or labeled according to the requirements of 49 CFR and the written instructions provided by the Traffic Control.

NOTE: Selection of the proper DOT shipping name is based on process knowledge of the waste stream, laboratory analysis, or the Material Evaluation Form provided by EA & QA.

6.1.22 Verify that all packages of material are monitored for external removal contamination and radiation levels.

RADIOACTIVE SOURCE CONTROLLER

6.1.23 Request Radiological Safety to conduct radiological surveys of the radioactive source material and packaging.

6.1.24 Review radiological survey results to verify compliance with applicable regulations.

6.1.25 Maintain constant surveillance of radioactive source material.

WASTE ORIGINATOR

6.1.26 Accumulate and package waste for storage and/or disposal according to all applicable EPA/DOT/DOE regulations and WEMCO procedures.

6.1.27 Notify Facilities and Materials Evaluation when accumulated waste is packaged for on-site storage facilities.

6.1.28 Request radiological surveys of wastes and packages as necessary.

6.1.29 Provide waste tally sheet to Environmental Compliance for use in preparing Material Evaluation forms.

FACILITIES AND MATERIALS EVALUATION

6.1.30 Provide assistance to waste generators with characterization and packaging of wastes for storage and/or disposal.

6.0 **PROCEDURE** (cont.)

ENVIRONMENTAL COMPLIANCE

6.1.31 Characterize waste according to Resource Conservation and Recovery Act (RCRA) guidelines and DOE requirements based on the results of the waste analysis conducted by Analytical Laboratories.

RADIOLOGICAL SAFETY

6.1.32 Conduct radiological surveys of materials and packages.

6.1.33 Document survey results on the appropriate forms according to departmental procedures.

6.1.34 Forward copies of the surveys to the Shipment Originator, Waste Originator, and Site-Wide Quality Assurance as required.

TRANSPORTATION SAFETY COMMITTEE

6.1.35 Evaluate policies for packaging safety at the FEMP for compliance with applicable federal, state and local regulations.

6.1.36 Ensure packaging policies and practices are conducted in accordance with all FEMP and OSHA safety requirements.

WASTE OPERATIONS

6.1.37 Package hazardous waste and radioactive waste.

6.1.38 Ensure that hazardous waste has been packaged according to EPA/DOT/DOE regulations and WEMCO Guidelines.

6.1.39 Verify that hazardous waste, radioactive, or mixed waste is packaged according to 49 CFR.

6.1.40 Request radiological surveys of packaged waste as required.

WASTE SHIPPING

6.1.41 Prepare waste packaging for use by the Waste Originator according to departmental procedures.

6.1.42 Prepare packages of waste according to departmental procedures and specific consignee requirements.

6.1.43 Request radiological surveys of waste containers as required.

6.0 **PROCEDURE** (cont.)

6.2 On-Site Movements

CENTRALIZED TRAINING

6.2.1 Approve departmental lesson plans for the personnel in each organization involved with the loading, and transporting of hazardous materials on site, hazardous wastes, and radioactive materials.

6.2.2 Verify that the results of lesson plans are documented and that training qualifications records are included in the employee's personnel record and entered into Centralized Training computer files.

ANALYTICAL SECTION (of Site Services)

6.2.3 Ensure that samples are properly identified and quantified in order to determine on-site transport requirements.

6.2.4 Ensure that temporary storage of samples incidental to transport complies with existing requirements in applicable operating procedures and Nuclear Safety guidelines.

6.2.5 Contact Traffic Control if further guidance is needed when offering samples for on-site movement.

SITE-WIDE QUALITY ASSURANCE

6.2.6 Conduct periodic inspections of on-site shipping operations per applicable departmental procedures to verify compliance with applicable DOT/DOE/EPA regulations, WEMCO policies and procedures, and document inspections. Also conduct internal and independent audits of the on-site transportation of hazardous materials including hazardous substances, hazardous wastes, and nuclear and radioactive materials according to the appropriate DOE requirements.

6.2.7 Sign checksheet/release verifying that all Site-Wide Quality Assurance/Quality Certification functions have been performed and documented for on-site movement as required.

TRANSPORTATION SAFETY COMMITTEE

6.2.8 Evaluate policies for on-site transportation safety at the FEMP for compliance with applicable Federal, State and Local regulations.

6.0 **PROCEDURE** (cont.)

TRANSPORTATION SAFETY COMMITTEE

6.2.9 Ensure on-site transportation policies and practices are conducted in accordance with all FEMP and OSHA safety requirements.

SHIPMENT ORIGINATOR

6.2.10 Verify that the material is properly identified and quantified to determine on-site movement requirements.

6.2.11 Notify Facilities and Warehousing when the material is ready to be moved.

6.2.12 Attach appropriate transfer documents from Material Control and Accountability when required. Initiate appropriate transfer documents for on-site movement of material from one area to another.

6.2.13 Verify that the storage of materials incidental to transport complies with current requirements contained in the appropriate operating procedures and Nuclear Safety guidelines.

6.2.14 Contact the Traffic Control if further guidance is required when material is moved on-site.

6.2.15 When shipping nonradioactive hazardous materials, initiate form FMPC-OPR-3292, "Hazardous Material Transfer On-site Shipment."

6.2.16 Attach the completed form FMPC-OS&H-1993-1 to the Traffic Control copy of Form FMPC-OPR-3292.

6.2.17 Ensure a signed "Nonradioactive Hazardous Materials Shipment Approval Tag," form FMPC-OPR-2947 is attached to each package when shipping on radioactive hazardous materials on-site.

WASTE ORIGINATOR

6.2.18 Notify Facilities Services, Site-Wide Quality Assurance and MC&A when accumulated packaged waste must be transported to on-site storage facilities.

6.2.19 Request radiological surveys of wastes and packages as required.

6.2.20 Notify Facilities and Warehousing when packaged waste is ready to be transported to on-site storage facility.

6.0 **PROCEDURE** (cont.)

MAINTENANCE/GARAGE

6.2.21 Inspect, perform preventative maintenance, and repair all government vehicles used for on-site movement of material at FEMP.

6.2.22 Maintain records of services.

6.2.23 Notify government vehicle custodians of scheduled preventative maintenance and safety inspection services.

FACILITIES AND WAREHOUSING

6.2.24 Verify that on-site motor vehicle operators possess a valid state driver's license with the appropriate endorsements.

6.2.25 Verify that on-site motor vehicle operators have been properly trained and qualified according to the responsibilities to be performed.

6.2.26 Motor vehicle operator shall document the inspection results on the appropriate vehicle inspection form (Form OPR 2414), sign the inspection form and submit it to their supervision, and notify supervision of any defective or unsafe vehicle conditions.

NOTE: All defective or unsafe vehicle conditions must be corrected before the vehicle can be used.

6.2.27 Ensure that all packages are marked per applicable departmental procedures.

NOTE: If package markings are illegible or missing, notify supervision per applicable departmental procedure.

6.2.28 Ensure that all hazardous waste packages are labeled with the applicable DOT/EPA/OSHA labels and/or markings.

NOTE: If package labels are illegible or missing, notify supervision per applicable departmental procedure.

6.0 **PROCEDURE** (cont.)

FACILITIES AND WAREHOUSING

6.2.29 Load the material properly on the transport vehicle and ensure that the material is adequately distributed for weight distribution, stable and secured against shifting during transport.

NOTE: Hazardous materials shall be loaded onto a transport vehicle according to the guidelines provided in the DOT Hazardous Materials Segregation/Separation Chart and in compliance with all applicable Nuclear Safety guidelines.

6.2.30 Deliver the material to the designated delivery point by using the most direct and least congested route.

6.2.31 Prepare depleted, normal, or enriched uranium and other nuclear or radioactive material for on-site movement.

NOTE: Material Control and Accountability (MC&A) documentation must accompany the shipment from one area to the next area when necessary.

6.2.32 Request radiological surveys of materials and packages if not already available.

6.2.33 Review and verify radiological survey results for compliance with the appropriate regulatory requirements.

6.2.34 Assign personnel and equipment for on-site movement as requested.

6.2.35 Provide personnel and equipment for special emergency on-site movement as requested.

TRAFFIC CONTROL

6.2.36 Provide guidance for the required documents, packaging, marking, labeling, and the requirements for the placarding of hazardous materials for on-site movement.

6.2.37 Verify that the appropriate Federal and State Regulations and WEMCO Guidelines are followed for personnel and environmental safety.

6.0 **PROCEDURE** (cont.)

RADIOLOGICAL SAFETY

6.2.38 Conduct radiological surveys of materials, packages and vehicles on site.

6.2.39 Document the survey results on the appropriate forms according to departmental procedures.

6.2.40 Forward copies of the surveys to the Shipment Originator, Waste Originator, Traffic Control, and Site-Wide Quality Assurance as required.

MATERIAL CONTROL AND ACCOUNTABILITY (MC&A)

6.2.41 Prepare MC&A documentation for on-site movement of material as required.

NOTE: MC&A documents shall be used for verification of the materials and will serve as the shipping papers for on-site movement.

6.3 Off-Site Shipments

CENTRALIZED TRAINING

6.3.1 Approve departmental lesson plans for the personnel in each organization involved with the off-site loading, and transporting of hazardous materials, hazardous wastes, and radioactive materials.

6.3.2 Verify that the results of lesson plans are documented and that training qualification records are included in the employee's personnel record and entered into Centralized Training computer files.

ANALYTICAL SECTION (of Site Services)

6.3.3 Notify Material Control and Accountability and the Traffic Control when a sample containing nuclear radioactive material is to be shipped off-site.

6.3.4 Initiate Shipping Order for Nuclear Material Form, FEMP CONT-558, for samples that are to be shipped to off-site laboratories for analysis

6.0 **PROCEDURE** (cont.)

ANALYTICAL SECTION (of Site Services)

6.3.5 Forward the shipping order to Material Control and Accountability.

6.3.6 Initiate Shipping Order for Hazardous Material/ Hazardous Waste Non-Nuclear Form, FEMP CONT-3388, for samples that are to be shipped to off-site laboratories for analysis.

6.3.7 Forward the shipping order to Material Control and Accountability.

6.3.8 Verify that the waste samples are in proper packaging for off-site shipment according to departmental procedures.

6.3.9 Generate Form No. FMPC-OPR-2595, Off-Site Loading and Tie Down Inspection.

6.3.10 Maintain and verify the chain of custody transfer for off-site shipment according to applicable procedures.

6.3.11 Request that Radiological Safety monitor the samples and packages according to departmental procedures and provide the appropriate documentation to Traffic Control.

SITE-WIDE QUALITY ASSURANCE

6.3.12 Verify the identification of packaged uranium metals, oxides, and related products with the Shipping Order for Nuclear Material.

6.3.13 Conduct periodic inspections of the shipping operations per applicable departmental procedures to verify compliance with applicable DOT/DOE/EPA regulations and WEMCO policies and procedures and document inspections.

6.3.14 Review the Garage Section incoming vehicle inspection form for vehicle defects or deficiencies.

6.3.15 Attach the Quality Assurance Inspection Sheet, Form QAC-891010-1, Rev 1, to the support documentation for each vehicle loaded.

6.3.16 Verify that radiological surveys have been conducted for each carrier trailer and the materials for off-site shipment.

6.0 **PROCEDURE** (cont.)

SITE-WIDE QUALITY ASSURANCE

6.3.17 Verify that the exclusive use trailers have been sealed by Radiological Safety and document verification on Form FEMP-ES&H-1956-1.

6.3.18 Review the radiological survey results and verify that radiation readings for packages and the carrier vehicles are within the limits established by 49 CFR; document the review on Form FEMP-IRS&T-1993.

6.3.19 Verify, during the loading of carrier vehicles, that the packaging, marking, labeling, and placarding of off-site shipments are in compliance with 49 CFR; document compliance on appropriate form.

6.3.20 Review all documentation that supports each off-site shipment, including Quality Assurance documentation; document this review on Form QAC-890601-1, Rev. 0.

6.3.21 Sign the appropriate consignee shipment certification (NVO-211) certifying that Low Level Radioactive Waste shipments comply with the waste acceptance criteria established by the consignee.

6.3.22 Sign the shipping order verifying that all Site-Wide Quality Assurance/Quality Certification functions have been performed and documented for off-site shipments as required.

6.3.23 Coordinate all Quality Assurance review activities with the appropriate WEMCO sections and conduct internal and independent audits of the packaging and transportation of hazardous materials including hazardous substances, hazardous wastes, and nuclear and radioactive materials according to the appropriate DOE requirements.

RADIOLOGICAL SAFETY

6.3.24 Conduct radiological surveys of materials and packages in accordance with applicable departmental procedures.

6.3.25 Coordinate the radiological survey of inbound carrier vehicles, with the Traffic Control, before and after loading, and prior to release from FEMP.

6.0 **PROCEDURE** (cont.)

RADIOLOGICAL SAFETY

6.3.26 Document the survey results on the appropriate forms according to departmental procedures.

6.3.27 Forward copies of the surveys to the Shipment Originator, Waste Originator, Traffic Control, and Site-Wide Quality Assurance as required.

SHIPMENT ORIGINATOR

6.3.28 Provide the Traffic Control with the required advance notification of off-site shipment.

6.3.29 Verify that material is properly identified and quantified.

6.3.30 Provide the Traffic Control with the information required to determine the appropriate DOT requirements for the shipment.

6.3.31 Notify Facilities and Warehousing when the material is prepared for loading or movement to the designated area for off-site shipment.

6.3.32 Provide Facilities and Warehousing with the documentation that designates the location on-site where the material for off-site shipment is to be picked up, location on-site where the material for off-site shipment is to be delivered, and the name and quantity of the material to be moved.

6.3.33 Provide any additional information required to the transporter to facilitate the safe loading and movement of material.

6.3.34 Verify that the temporary storage of materials incidental to off-site transport is in compliance with the existing requirements of the appropriate operating procedures and Nuclear Safety guidelines.

6.3.35 Prepares Product Order per FMPC-714 for proposed shipments of nuclear product material.

6.3.36 Initiate Shipping Order for Nuclear Material (Form FMPC Cont-558) for nuclear materials that are to be shipped off-site and forward shipping order to Material Control and Accountability.

6.0 **PROCEDURE** (cont.)

SHIPMENT ORIGINATOR

6.3.37 Initiate Shipping Order for hazardous Material/Hazardous Waste - non-nuclear (Form FMPC Cont-3388) for all hazardous non-nuclear material that is to be shipped off site and forward shipping order to Material Control and Accountability.

6.3.38 Initiates Miscellaneous Shipping Order (FMPC-ADMS-871) and obtains applicable approvals for all non-nuclear nonhazardous material shipments. Forwards approved Miscellaneous Shipping Order (MSO) to the Traffic Control.

6.3.39 Request radiological survey results of materials and packages to ensure compliance with applicable regulations and site procedures.

6.3.40 Notify and obtain approval of site-wide Quality Assurance/ Quality Certification for shipments of nuclear material.

6.3.41 Obtain Radiological Safety sign-off for nonradioactive material on a Miscellaneous Shipping Order.

6.3.42 Obtain Environmental Compliance sign-off for nonhazardous material on a Miscellaneous Shipping Order.

6.3.43 Provide Traffic Control with the information necessary to the applicable DOT requirements and prepare the bill of lading.

6.3.44 Contact the Traffic Control for further guidance when preparing material for off-site shipment.

FACILITIES AND WAREHOUSING

6.3.45 Verify that the transport vehicle is appropriate for the weight and center of gravity of the material to be loaded.

6.3.46 Inspect the transport vehicle and record the findings of the inspection.

6.3.47 Accept or reject equipment based on the vehicle inspection.

6.3.48 Position packages on the vehicle so that the weight is equally distributed over the width and length of the vehicle and as equally as possible among the vehicle's axles.

6.0 **PROCEDURE** (cont.)

FACILITIES AND WAREHOUSING

6.3.49 Ensure the load is placed on the vehicle in such a manner that it does not obscure the driver's view ahead or to the right or left sides, interfere with the free movement of his arms or legs, prevent his free and ready access to accessories required for emergencies, or prevent the free and ready exit of any person from the vehicle's cab or driver's compartment.

6.3.50 Ensure that all loading of hazardous materials, hazardous substances, hazardous wastes, and radioactive materials is conducted according to the guidelines provided in the DOT Hazardous Materials Segregated/Separation Chart in compliance with all applicable Nuclear Safety guidelines.

6.3.51 Block and brace all packages on or in the vehicle to prevent shifting or changing of position during normal transportation conditions, and in such a manner that the packages will remain stable after the restraints are removed prior to unloading the packages.

NOTE: Do not rely upon the ends, sides, or doors of the vehicle to prevent shifting of heavy loads unless they are specifically designed for this purpose.

6.3.52 Ensure that all sides, sideboards, rear endgates and endboards capable of preventing packages shifting are in their proper place and are strong enough and high enough to ensure that packages will not shift upon, or fall from the vehicle.

6.3.53 Use as many tiedown assemblies to secure all packages being transported on vehicles which are not equipped with sides or sideboards, and rear endgate or endboard as directed by applicable FEMP procedures.

6.3.54 Use only tiedown assemblies that conform to the rules of 49 CFR 393.102; plastic or fiber rope, any material with unknown strength or any damaged materials shall not be used as components of a tiedown system.

6.3.55 Tiedown assemblies will be installed to ensure the load will not move or shift during normal transport.

6.0 **PROCEDURE** (cont.)

FACILITIES AND WAREHOUSING

6.3.56 Ensure the principal tiedown forces are transmitted to the vehicle's frame rather than the wood or metal decking, and that the strength of the tiedown attachment points on the vehicle are equal to or greater than the strength of the tiedowns.

6.3.57 Ensure that flexible tiedowns (e.g., rope, strap, chain, etc.) are free from contact with any other stationary objects when they are taut to prevent chafing and damage during transport.

6.3.58 Visually check all packages before loading to ensure no defects are present.

6.3.59 Complete and submit the Off-Site Loading and Tie-Down Inspection Form to the Traffic Control when necessary.

6.3.60 Review and verify the radiological survey results for compliance with the appropriate regulatory requirements.

6.3.61 Submit appropriate paperwork to Traffic Control after loading.

6.3.62 Assign personnel and equipment for loading off-site shipments as required.

6.3.63 Assign personnel and equipment for spotting/loading of carrier trailers and freight containers used for off-site shipments.

PROCUREMENT/MATERIALS MANAGEMENT

6.3.64 Review and approve Miscellaneous Shipping Orders (MSO) and other documentation for off-site shipment of non-hazardous materials.

6.3.65 Forward approved copies of the Miscellaneous Shipping Order (MSO) to the Traffic Control.

6.3.66 Verify, using the appropriate shipping order, that the packages of material are identified as on the shipping order.

6.3.67 Attach the required markings, labels, and tally sheet to the packages of hazardous materials adhering to departmental procedures and direction by Traffic Control.

6.0 **PROCEDURE** (cont.)

MAINTENANCE/GARAGE

6.3.68 Inspect the inbound carrier vehicles that will be used for off-site shipments according to Federal Motor Carrier Safety Regulations and WEMCO procedures.

6.3.69 Document the inspection results on the FEMP Preliminary Visual Trailer Inspection Form with appropriate comments.

6.3.70 Forward copies of the maintenance and inspection documents to Site-Wide Quality Assurance and Facility Service and Support Sections.

6.3.71 Inspect, lubricate, perform the preventative maintenance for, and repair all government vehicles used for loading off-site shipments at FEMP.

6.3.72 Maintain records of services.

6.3.73 Notify the government vehicle custodians of scheduled preventative maintenance and safety inspection services.

TRAFFIC CONTROL

6.3.74 Provide guidance for the required documents and the requirements for the placarding of off-site shipments.

6.3.75 Verify compliance with appropriate Federal and State Regulations and WEMCO Guidelines.

6.3.76 Coordinate the scheduling of off-site shipment with the Shipment Originator, Site Services, and the carrier.

6.3.77 Coordinate the loading of off-site shipment with Site Services, Facilities and Warehousing, and the carrier.

6.3.78 Review shipping documents for completeness, proper authorization(s), and compliance with WEMCO policy, procedures, and accounting requirements.

6.3.79 Ensure that all off-site shipments are in compliance with legal restrictions on weight and dimension prior to release.

6.0 **PROCEDURE** (cont.)

TRAFFIC CONTROL

6.3.80 Prepare the Uniform Hazardous Waste Manifest according to the requirements of 40 CFR and the appropriate departmental procedures using documentation provided by the Shipping Originator and WEMCO support sections.

6.3.81 Prepare and sign the bill of lading according to the requirements of 49 CFR using documents provided by the Shipping Originator and WEMCO support sections.

6.3.82 Obtain the signature of the carrier's agent (driver) on all bills of lading and hazardous waste manifests to acknowledge receipt of the shipment by the carrier.

6.3.83 Use only ICC and PUCO approved commercial or contract carriers according to the appropriate DOE requirements.

NOTE: Commercial or contract carriers must have received an identification number from the Administrator of the USEPA. Additionally, State EPA identification numbers must be obtained from the Administrator of the State EPA Office when required.

6.3.84 Issue the appropriate shipment notifications to consignees.

6.3.85 Return the shipping order and notify Material Control and Accountability when a shipment of hazardous material, hazardous waste (non-nuclear), or nuclear material is shipped from FEMP.

TRANSPORTATION SAFETY COMMITTEE

6.3.86 Evaluate policies for off-site transportation safety at the FEMP for compliance with applicable Federal, State and Local regulations.

6.3.87 Ensure off-site transportation policies and practices are conducted in accordance with all FEMP and OSHA safety requirements. Conduct periodic inspections and evaluations of all activities associated with the handling and transporting of hazardous materials for off-site shipments.

6.0 **PROCEDURE** (cont.)

SAFEGUARDS AND SECURITY

6.3.88 Provide interpretation and advice concerning the security and safeguard measures required for off-site shipment of classified or strategic nuclear materials.

6.3.89 Coordinate with Traffic Control to spot incoming carrier vehicles for inspection by the Maintenance Garage and to have the radiological survey conducted.

6.3.90 Verify that vehicle doors are properly secured.

6.3.91 Verify that the seal number, when recognizable, matches the serial number on the bill of lading before the shipment leaves the FEMP site.

6.3.92 Verify that the bill of lading has been signed by the Traffic Control authorizing the shipment to be released.

6.3.93 Coordinate emergency response activities for off-site shipments with the Emergency Operations Center as required.

MATERIAL CONTROL AND ACCOUNTABILITY (MC&A)

6.3.94 Verify that the consignee is authorized to receive the specific nuclear materials before the materials are shipped.

6.3.95 Process, verify the type of material and lot numbers, and approve the Shipping Order for Nuclear Material Form, FEMP CONT-558, for off-site shipment of nuclear material.

6.3.96 Forward the shipping order to the Traffic Control.

6.3.97 Process, verify the type of material and lot numbers, and approve the Shipping Order for Hazardous Material/ Hazardous Waste Non-Nuclear Form, FEMP CONT-3388, for off-site shipment of material.

6.3.98 Forward the shipping order to the Traffic Control.

6.3.99 Receive shipping order from Traffic Control.

6.3.100 Notify the consignee that the preparation for off-site shipment has been completed.

6.0 **PROCEDURE** (cont.)

MATERIAL CONTROL AND ACCOUNTABILITY (MC&A)

6.3.101 Prepare and forward to the consignee, DOE/NRC Nuclear Materials Transaction Report, Form 741, for off-site shipments.

NOTE: These documents are used for verification of materials and shipping paper by Facility Site Services for material transport.

RADIOACTIVE SOURCE CONTROLLER

6.3.102 Notify the Traffic Control of the intent to ship radioactive source material off-site.

6.3.103 Provide copy of the purchase order to the Traffic Control.

6.3.104 Request Radiological Safety to conduct radiological 48-hour surveys of the radioactive source material and packaging.

6.3.105 Review the radiological survey results to verify compliance with applicable departmental procedures.

6.3.106 Initiate Shipping Order for Hazardous Material/Hazardous Waste Non-Nuclear Form, FEMP CONT-3388, after approval from EC&QA.

6.3.107 Notify the Traffic Control when the packaged material is ready to be shipped off-site.

6.3.108 Maintain constant surveillance of radioactive source material until it is loaded onto the transport vehicle for off-site shipment.

6.3.109 Remove the radioactive source material shipped from the inventory list.

WASTE OPERATIONS

6.3.110 Package hazardous waste and radioactive waste for off-site shipments.

6.3.111 Verify that hazardous waste for off-site shipment has been packaged according to EPA/DOT/DOE regulations and WEMCO Guidelines.

6.3.112 Request radiological surveys of packaged waste as required per applicable departmental procedures.

6.0 **PROCEDURE** (cont.)

WASTE SHIPPING COORDINATOR

6.3.113 Prepare and forward the Storage and Disposal Data Sheet, the Tally Sheet, and other documents as required to Site-Wide Quality Certification for review and approval.

6.3.114 Prepare additional shipping documentation according to consignee requirements.

NOTE: Consignee requirements must exceed the requirements of 49 CFR.

6.3.115 Receive the documentation associated with off-site shipment from the appropriate departments.

6.3.116 Forward the documentation to Site-Wide Quality Assurance for review.

WASTE SHIPPING

6.3.117 Prepare waste packaging for use by the Waste Originator according to departmental procedures.

6.3.118 Prepare packages of waste for off-site shipping according to departmental procedures and specific consignee requirements.

6.3.119 Request the radiological survey of waste containers as required.

SAFE SHUTDOWN

6.3.120 Prepares Nuclear Materials Disposition Order (NMDO) per PP-5031 for proposed shipments of nuclear materials.

6.3.121 Acts as liaison internally to facilitate shipment and externally to ensure customer satisfaction.

6.3.122 Tracks NMDO through completion, issues completion notice and maintains documentation on activity.

7.0 **APPLICABLE DOCUMENTS**

7.1 Drivers

7.1.1 DOE 1540.1, "Materials Transportation and Traffic Control Management"

7.0 **APPLICABLE DOCUMENTS** (cont.)

7.1.2 OR 1540.1B, "Materials Transportation and Traffic Control Management"

7.1.3 DOE 1540.2, "Hazardous Material Packaging for Transport - Administrative Procedures"

7.1.4 DOE 1540.3, "Base Technology for Radioactive Material Transportation Packaging Systems"

7.1.5 DOE 5000.3A, "Occurrence Reporting and Processing of Operations Information"

7.1.6 DOE 5480.3, "Safety Requirements for the Packaging and Transportation of Hazardous Materials"

7.1.7 DOE 5632.1, "Physical Protection of Classified Matter and Information"

7.1.8 DOE 5632.2A, "Physical Protection of Special Nuclear Material and Vital Equipment"

7.1.9 DOE 5700.6B, "Quality Assurance"

7.1.10 DOE/EV 06194-3, "Explosives Safety Manual"

7.1.11 DOE 5480.19 "Conduct of Operations"

7.1.12 10 CFR Part 71, "Packaging of Radioactive Material for Transport and Transportation of Radioactive Material Under Certain Conditions"

7.1.13 40 CFR Parts 116 -117, "Designation of Hazardous Substances and Their Reportable Quantities"

7.1.13 40 CFR Parts 260-265, "Standards Applicable to Hazardous Wastes"

7.1.14 49 CFR Parts 100-199, "Hazardous Material Regulations"

7.1.15 49 CFR Parts 383-397, "Federal Motor Carrier Safety Regulations"

7.1.16 International Atomic Energy Agency (IAEA) "Safety Series No. 6," 1985 Edition, as amended

7.0 **APPLICABLE DOCUMENTS** (cont.)

7.1.17 International Air Transport Association (IATA) "Dangerous Goods Regulations," 1991 Edition

7.1.18 International Civil Aviation Organization (ICAO) "Technical Instructions," 1985 Edition

7.1.19 American National Standards Institute (ANSI) N14 Series

7.1.20 Directory of DOE Certificates of Compliance for Radioactive Materials Packaging

7.2 Reference Documents

THIS SECTION WILL CONTAIN A LIST OF APPLICABLE WEMCO PROCEDURES.

8.0 **APPLICABLE FORMS**

THIS SECTION WILL CONTAIN A LIST OF APPLICABLE WEMCO FORMS AND FORM NUMBERS.

9.0 **ATTACHMENTS**

None

WESTINGHOUSE ENVIRONMENTAL MANAGEMENT COMPANY OF OHIO SITE DOCUMENT PROGRAM		**SITE POLICY AND PROCEDURE** Page 29 of 29
Title: **PACKAGING, ON-SITE MOVEMENT AND OFF-SITE SHIPMENT OF MATERIAL**		DOCUMENT NO: PP-0314 REVISION NO. 0
Authorization: W. H. Britton, President	Supersedes: FMPC-314, Dated 12-31-90, Rev. 2	Issue Date: 12-20-91

RECORD OF ISSUE/REVISIONS

DATE	REV. NO	DESCRIPTION AND AUTHORITY
12-20-91	0	Document describing how on-site and off-site materials are packaged and moved per Request No. P91-387, initiated by J. McGrogan.

WASTE PROGRAMS MANAGEMENT PROCEDURE	Overpacking Defective Containers	SOP 20-C-600 Area: As Applicable
(Signature on File) Authorization: G. Hazlewood, Waste Programs Project Mgmt. Manager	Supersedes: 20-C-600 Dated: 03-06-91	Issue Date: 02-24-95

CONTENTS

NON-CONTROLLED COPY

Section		Page
1.0	PURPOSE	3
2.0	SCOPE	3
3.0	RESPONSIBILITY	3
4.0	SAFETY REQUIREMENTS	4
5.0	PROCEDURE	5
6.0	DEFINITIONS	8
7.0	APPLICABLE DOCUMENTS	8

LIST OF FIGURES

Figure	TITLE	Page
1	Overpack Record	10
2	Typical Lifting/Handling Equipment	11
3	Installation of Bolt-Type Locking Ring	12
4	Diagram of Overpack/Defective Container Identification	13
5	Permanent Inventory Record	14
6	Item Production/Certification/Identification (Card 65-1)	15
7	Drum Venting Record	16

RECORD OF ISSUE/REVISIONS

DATE	REV. NO.	DESCRIPTION AND AUTHORITY
03-06-91	0	Requirement for a new procedure for overpacking defective containers per Request No. P91-058 initiated by J. W. Ogg.
09-11-91	1	Revised to replace Figure 1 with current form per Request No. P91-404, initiated by J. Ogg.
08-09-93	2	Revised to incorporate CIOs C93-129 (P93-768), C93-525 (P93-817), C93-526 (P93-818), C93-528 (P93-819), and update to conform with Procedure Program requirements. Supersedes 01-C-804, dated 06-10-88.
02-24-95	0	Reissued for update of content and to incorporate TCN No. 0158 per Request P94-0491, initiated by K. Belgrave. The document format does not conform to current RSO SOP format per D10-00-20, format changed at the request of the 20-C-600 document owner.

1.0 PURPOSE

The purpose of this document is to establish the procedure for overpacking defective drums and smaller containers which can be overpacked using drums.

2.0 SCOPE

This procedure shall apply to all drums and smaller material containers which are defective and unacceptable for storage.

3.0 RESPONSIBILITY

3.1 Supervisors shall be responsible for the following:

- Ensuring that personnel have completed On The Job Training (OJT) for the applicable procedures.
- Making the final determination to overpack a container.
- Ensuring that defective containers hold compatible materials when multiple containers are to be overpacked into a single overpack drum.
- Ensuring the overpack drums are vented when vented defective containers are placed in the overpack drums.
- Designating appropriate lifting device(s).
- Supplying the Material Control & Accountability (MC&A) specialist with recorded information taken from the defective container(s).
- Contacting Industrial Hygiene or Radiological Control to determine the appropriate respiratory protection and PPE for the work being performed.
- Issuing the required respiratory protection and PPE to personnel as specified in the applicable permits.
- Immediately notifying the Assistant Emergency Duty Officer (AEDO) in the event of a hazardous material spill or abnormal event.
- Reviewing applicable Material Safety Data Sheets (MSDS) and Material Evaluation Forms (MEF) with personnel.

3.2 Operators shall be responsible for the following:

- Complying with this procedure.
- Immediately reporting a spill or release of hazardous materials to Supervisor in accordance with SOP 20-C-606, "Hazardous Material Spill Clean-Up".

3.3 Waste Operations Support shall be responsible for providing guidance to the Supervisor concerning material compability.

4.0 SAFETY REQUIREMENTS

- Safety glasses with side shields shall be worn unless other eye protection is specified by Indust Hygiene or Radiological Control.

- Respiratory protection issued by the Supervisor shall be worn when required by IH and/or Radiological Control.

- Leather-palm gloves shall be worn to protect the hands from rough or sharp edged material and possible contamination.

- A NILFISK HEPA type filter vacuum cleaner shall be used in accordance with SOP 20-C-602, "Inspection and Operation of NILFISK Portable Vacuum Units" or a vacuum system approved by S&H.

- As applicable, nuclear safety requirements of SOP 20-C-904 shall be followed in the handling of depleted, normal, and/or enriched material.

- Any release of hazardous material shall be reported immediately per SOP 20-C-606, "Hazardous Material Spill Clean-Up".

- Operators shall have reviewed and be familiar with MSDSs for hazardous materials/chemicals that may be used or encountered.

- Any circumstance which could have resulted in an intake of radioactive materials by inhalation, ingestion, or absorption shall immediately be reported to a Supervisor. The Supervisor shall immediately report the circumstance of possible radioactive materials intake to S&H Radiologic Control Department for evaluation. When the suspect isotope is uranium, the involved personnel shall report to the Urine Sampling Station at the end of their shift to complete an Incident Investigation Report (IIR)(Form No. FS-F-1458), and submit an incident urine sample. The involved personnel shall also report to the Urine Sampling Station at the start of their next shift to submit a follow up urine sample. When the suspect isotope is other than uranium, the involved personnel shall report to the Dosimetry Section of the Radiological Control Department for further determination of actions. Employees are responsible for complying with additional requirements as specified as specified by the Radiological Control Section.

- Any situation which could have resulted in the inhalation, ingestion, or absorption of a hazardous material shall immediately be reported to a Supervisor or to the Assistant Emergency Duty Officer (AEDO), who will immediately report the circumstances to Medical and Industrial Hygiene. The involved personnel shall be directed by the Supervisor or AEDO as to when and where to report for medical evaluation, completion of an Incident Investigation Report (IIR)(Form No. FS-F-1458), and submitting bioassay samples (e.g., blood, urine). Employees are responsible for complying with any additional requirements as specified by S&H.

- All personnel performing duties covered by this procedure shall adhere to all sign postings and requirements including but not limited to RWP's.

6989

5.0 PROCEDURE

5.1 General Instructions

5.1.1 Additional information, Warnings, Cautions, and Notes are included in bold type in the Step to which they apply.

5.1.2 Operations Supervisor shall assign personnel to the various tasks.

5.2 Overpacking Into Drums

5.2.1 Operations personnel select defective container(s) to be overpacked. **If multiple containers are to be overpacked into a single overpack drum, the Supervisor shall ensure that the materials to be combined are compatible and are compatible with the overpacking container. Contact Waste Operations Support for guidance concerning compatibility. If defective containers are vented, then overpack drums shall also be vented.**

5.2.2 Carefully load the defective container(s) onto a pallet for transport.

5.2.3 Move the defective container(s) to the loading area specified by the Supervisor per the applicable procedure, SOP 20-C-111, "Transport of Low Level Radioactive Waste and Nuclear Material," or SOP 20-C-017, "Movement of Hazardous/Mixed Waste."

5.2.4 Complete "Overpack Record," Form FS-F-2987-1 (See Figure 1) with data from defective container(s), except the inventory number. If a new inventory number does not exist on the overpack container, contact the MC&A specialist for a new inventory number assignment.

a. If the information which appears on the defective container(s) is illegible and/or non-existent, contact Supervisor. **Supervisor shall contact MC&A, S&H, and/or transportation for assistance in identifying material/container markings.**

5.2.5 Take the "Overpack Record" form to the MC&A Specialist's office for verification.

a. Correct any discrepancies with assistance from MC&A per SOP 20-C-001, "Changes To Form Entries".

5.2.6 Prepare new markings/labels for the overpack drum(s) by using the identification from the markings/labels on the defective container(s), except the inventory number. If a new inventory number does not exist on the overpack container, contact the MC&A specialist for a new inventory number assignment.

a. If any discrepancies were corrected per 5.2.5 a of this procedure, use the corrected data.

5.2.7 Obtain required quantity of acceptable overpack drums according to material compatibility and defective container size.

5.2.8 Obtain the tare weight of the empty overpack drum.

5.0 PROCEDURE (cont.)

5.2.9 Record the overpack tare weight(s) on the "Overpack Record," Form FS-F-2987-1 (See Figure 1).

5.2.10 Overpacking shall be preformed in a containment area as follows:

a. Perform overpacking in a prepared, designated area or,

b. Prepare a containment area near the container using herculite, heavy plastic or other suitable material, by wraping the sides of the herculite, heavy plastic, etc. around plastic pipe to form a dike. **Any spills shall be handled per SOP 20-C-606, "Hazardous Material Spill Clean-Up".**

5.2.11 Move overpack drum(s) to the loading area per SOP 20-C-111, "Transport of Low Level Radioactive Waste and Nuclear Material."

5.2.12 Place an overpack drum on the prepared surface and remove bolt, locking ring, lid, and gasket.

5.2.13 Ensure that the forklift or hoist/lifting device specified by the Supervisor has been inspected (checked) per SOP 20-C-111, "Transport of Low Level Radioactive Waste (LLRW) and Nuclear Material (NM), (See Figure 2 for typical lifting device).

5.2.14 Using the specified forklift/hoist and lifting device, carefully place defective container(s) into the overpack drum. **Keep fingers out of pinch points while lowering containers into overpack.**

5.2.15 Check condition of gasket, lid, and lock ring.

a. Replace any damaged items.

5.2.16 Set gasket and lid evenly on overpack drum.

5.2.17 Place the locking bolt ring around the drum and lid ensuring the bolt lugs are pointing downward and positioned no more than six (6) inches from the seam of the overpack drum.

5.2.18 Install locking bolt shaft through the unthreaded lug, locking nut, and the threaded lug (See Figure 3) so that the locking bolt head rests against unthreaded lug.

5.2.19 Using a wrench, tighten the locking bolt.

5.2.20 Manually tighten the locking nut against the threaded lug.

5.2.21 Using a wrench, tighten the locking nut against the threaded lug an additional 1/4 turn.

5.2.22 Weigh the completed overpack drum and record the overpack gross weight on "Overpack Record," Form FS-F-2987-1. (See Figure 1).

5.0 PROCEDURE (cont.)

6989

5.2.23 Determine the overpack drum tare weight by adding the tare weights of the defective container(s) to the tare weight of the overpack drum and record on "Overpack Record," Form FS-F-2987-1. (See Figure 1).

5.2.24 Determine net weight of overpack drum by subtracting the tare weight as determined in Step 5.2.23 from the overpack gross weight and record on "Overpack Record," Form FS-F-2987-1. (See Figure 1).

5.2.25 Using information from "Overpack Record," Form FS-F-2987-1, stencil/paint the required identification per Figure 4, applicable section number. **Stencil shall be legible block letters 1 1/2-inches in height (minimum).**

a. If the overpack drum contains non-RCRA material or uncharacterized material, stencil/paint the "FEMP Lot Marking Code" followed by the drum number using two (2) lines (See Figure 4, Section 1).

b. If the overpack drum contains RCRA material, stencil/paint the "FMPC Lot Marking code" followed by the drum number using one (1) line (See Figure 4, Section 2).

5.2.26 Affix all markings/labels previously prepared per Section 5.2.6 of this procedure to the overpack drum as in Figure 4 (Section 2 for RCRA, Section 3 for vented, Section 5 for 55-gallon).

5.2.27 Complete and sign "Item Production/Certification/Identification" Card 65-1, Form FS-F-1945-1. (See Figure 6).

5.2.28 Have Supervisor review completed "Item Production/Certification/Identification" and obtain Supervisor's signature.

5.2.29 Move the overpack(s) into storage locations as instructed by Supervisor per the applicable procedure, SOP 20-C-111, "Transport of Low Level Radioactive Waste and Nuclear Material" or SOP 20-C-017, "Movement of Hazardous/Mixed Waste."

5.2.30 Record location and other information requested in the "Permanent Inventory Record," Form FMPC-CONT-367. (Figure 5).

5.2.31 Transmit "Overpack Record," 65-1 Card, and "Permanent Inventory Record," to MC&A Specialist's office.

5.3 <u>Overpacking Into Vented Single Lidded Drums</u>

5.3.1 Complete Steps 5.2.1 through 5.2.12 of this procedure.

5.3.2 If the overpack drum is to be stored inside or under shelter, proceed as follows:

a. Using the method specified by Supervisor make 1/4-inch to 1-inch holes (180 degrees apart) in the side of the drum approximately 1-inch below the top rim of the overpack drum ensuring vent holes do not interfere with the lock ring assembly. (See Figure 4, Section 3).

8890

5.0 PROCEDURE (cont.)

5.3.3 If the overpack drum is to be stored outside, proceed as follows:

a. Obtain a bung type lid and NUC-FIL 013 vent plug from the Supervisor.

b. Install the vent plug in the bung hole.

5.3.4 Using a stencil and white paint, stencil the side of the drum with the word "VENTED" to indicate the drum has been vented. **The word "VENTED" shall be 1 1/2 to 2-inches high and located under the bottom chime at the drum seam (drum centerline)(See Figure 4, Section 3).**

5.3.5 Record the required information on the "Drum Venting Record Form FMPC-OPR-3228 (See Figure 7).

5.3.6 Complete Steps 5.2.13 through 5.2.31 of this procedure.

6.0 DEFINITIONS

- Defective Container - A can or drum with holes, dents, bulges, and/or corrosion which is unacceptable for storage of material and has the potential to cause a leak or spill.
- Overpack Drum - A drum into which one (1) or more smaller defective containers are placed.
- Overpack Tare Weight - The sum of the tare weights from the defective container(s) plus the weight of the overpack drum.
- Overpack Gross Weight - The total weight of the completed overpack drum.
- Overpack Net Weight - The weight after subtracting overpack tare weight (as defined in 6.3) from overpack gross weight (as defined in 6.4).

7.0 APPLICABLE DOCUMENTS

7.1 Drivers

- DOE Order 5480.19
- FEMP, "Drum Management Plan"

7.2 References

- RM-0005, "FEMP Lot Marking and Color Coding System"
- SOP 20-C-904, "General Nuclear Safety Requirements"

7.0 APPLICABLE DOCUMENTS

6989

- SOP 20-C-606, "Hazardous Material Spill Clean-Up"
- SOP 20-C-912, "Checking Scale Operation"
- SOP 20-C-111, "Transport of Low Level Radioactive Waste and Nuclear Materials"
- SOP 20-C-001, "Changes To Form Entries"
- SOP 20-C-602, "Inspection and Operation of NILFISK Portable Vacuum Units"
- SOP 20-C-017, "Movement of Hazardous/Mixed Waste"

0808

FIGURE 1

OVERPACK RECORD
Form FS-F-2987-1

OVERPACK RECORD

DATE: BADGE:

LOT NUMBER	DEFECTIVE CONTAINER WEIGHTS				OVERPACK WEIGHTS				ADDED INFORMATION				DRUM FROM			OVER-PACK SIZE	HOLE IN DRUM YES NO	[illegible]
	OLD DRUM NO	GROSS	TARE	NET	NEW DRUM NO	GROSS	TARE	NET	GAIN	LOSS	WET	DRY	AREA	ROW	STACK			
TOTALS																		

FS-F-2987-1 (9-93)

6989

FIGURE 2

TYPICAL LIFTING/HANDLING EQUIPMENT

LIFTING/HANDLING FIXTURE

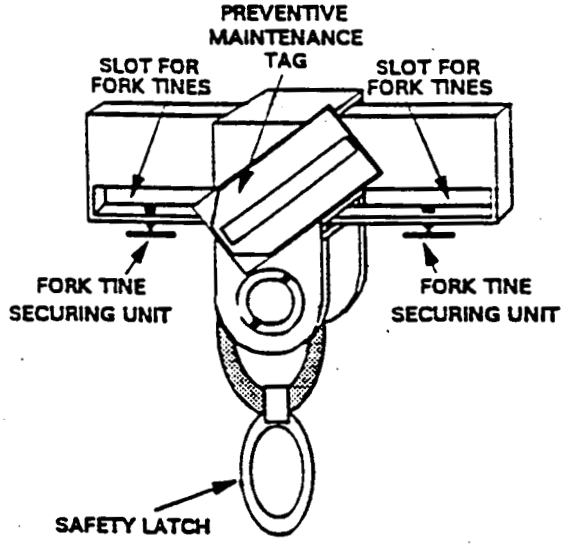

DRUM LIFTING DEVICE

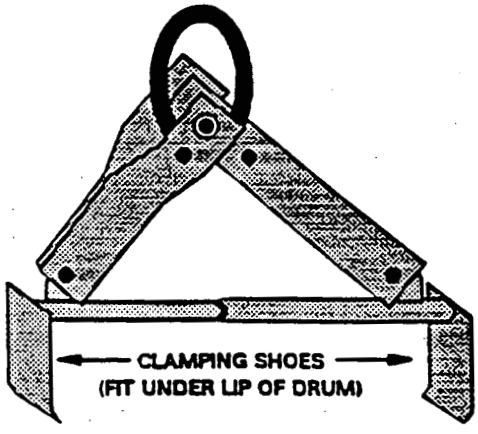

LIFTING/HANDLING SETUP FOR FORKTRUCK/HANDSTACKE

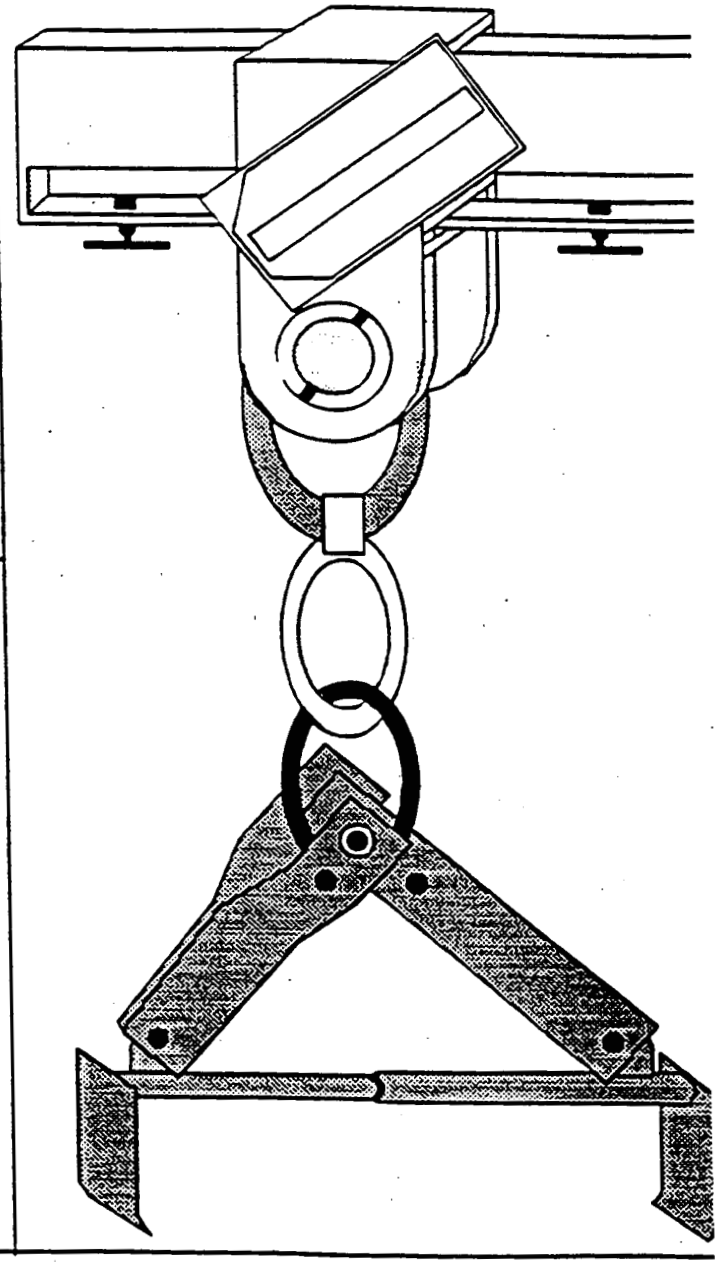

0880

FIGURE 3

INSTALLATION OF BOLT-TYPE LOCKING RING

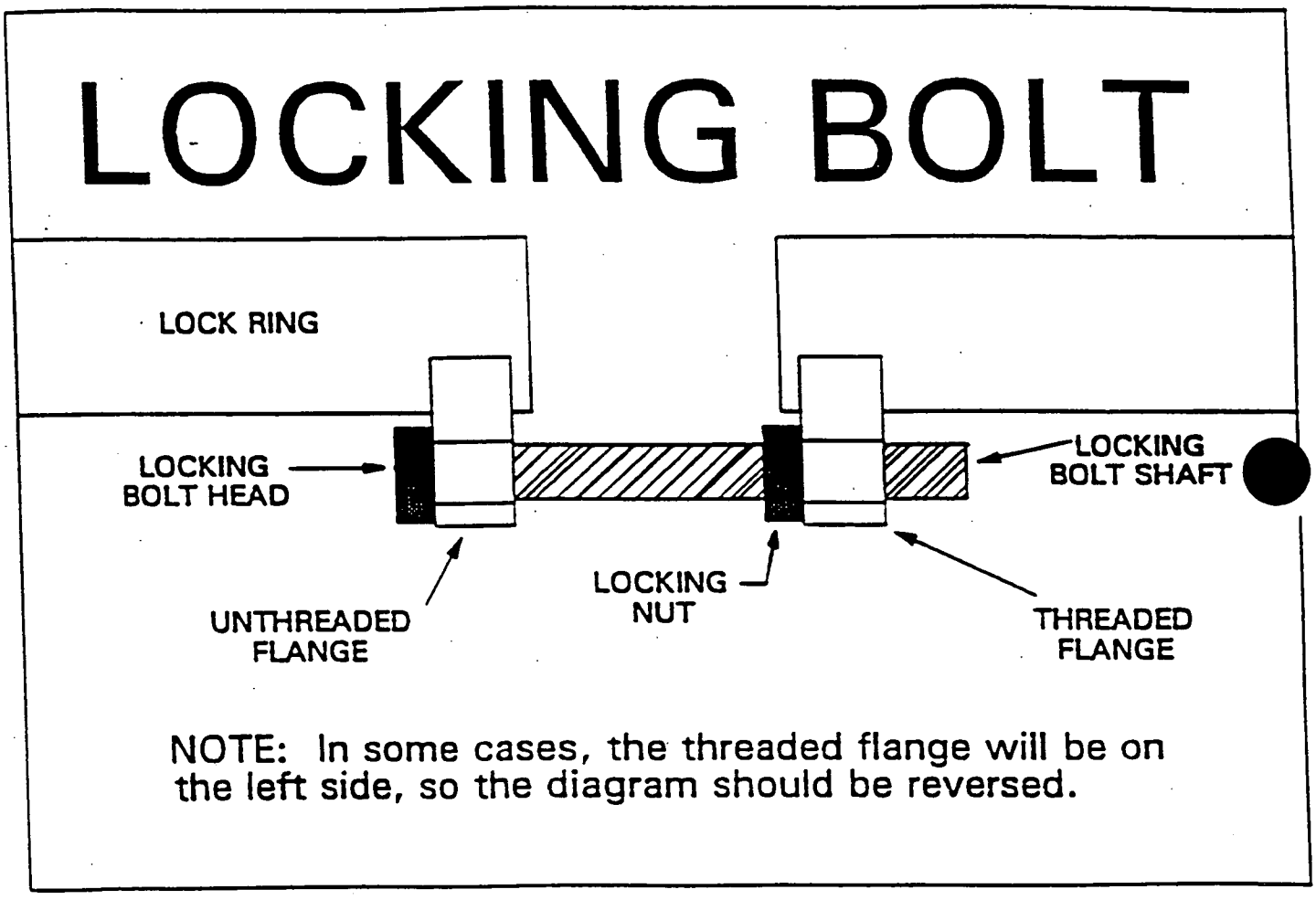

6989

FIGURE 4

DIAGRAM OF OVERPACK/DEFECTIVE CONTAINER IDENTIFICATION

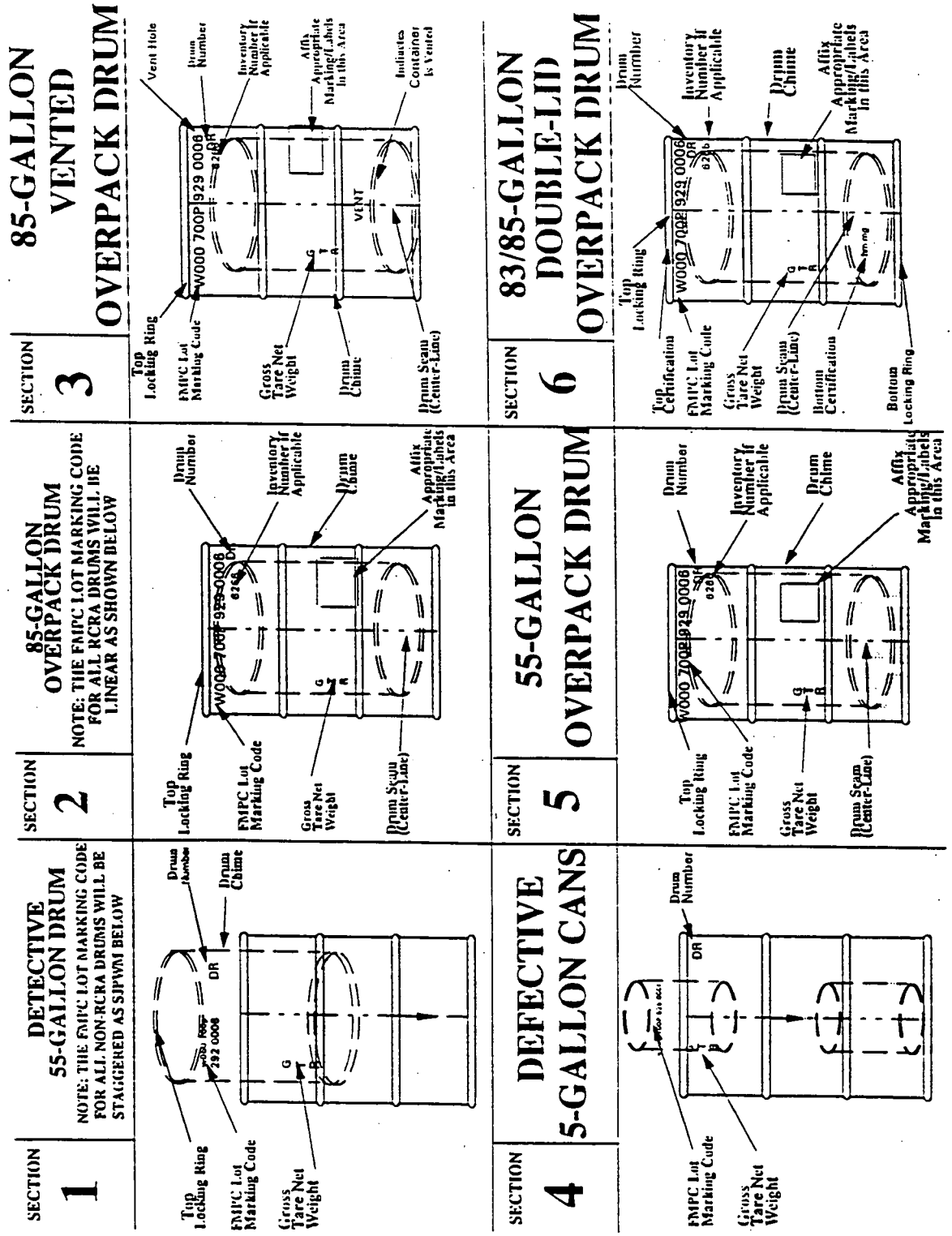

FIGURE 5

FEMP
PERMANENT INVENTORY RECORD

DATE:	INVENTORY SHEET NUMBER:
PLANT: (1)	AREA: / NUCLEAR MATERIAL:

LINE NO.	BADGE NUMBER (4-8)	INVENTORY NUMBER	LOT NUMBER: P. O. NUMBER (20-23)	LOT NUMBER: SOURCE (24-26)	LOT NUMBER: CLASS (27)	LOT NUMBER: MATERIAL (28-30)	LOT NUMBER: SEQUENCE (31-34)	DRUM NO.	GROSS WEIGHT POUNDS	TARE WEIGHT POUNDS (74-80)	NET WEIGHT POUNDS (74-80)	MBA (40-42)	LOCATION: ROW.	LOCATION: STACK	LOCATION: LEVEL	DRUM SIZE (40-42)	(✓)YES: OP	(✓)YES: PODS
1																		
2																		
3																		
4																		
5																		
6																		
7																		
8																		
9																		
10																		
11																		
12																		
13																		
14																		
15																		
16																		
17																		
18																		
19																		
20																		

FC 5387 (REV 3/4/93)

000444

6989

FIGURE 6

ITEM PRODUCTION/CERTIFICATION/IDENTIFICATION
Form FS-F-1945-1

CARD 65- **ITEM PRODUCTION/CERTIFICATION/IDENTIFICATION**

INV. NO.:

P. O. NO.	SOURCE	CLASS	MATERIAL TYPE	LOT SEQUENCE NO.	DATE MO	DATE DAY	DATE YEAR	SHIFT	BADGE NO.	CONT. NO.	SERIAL NO.

SEAL NUMBER	SEAL DATE MONTH	SEAL DATE DAY	SEAL DATE YEAR

WASTE DESCRIPTION AND COMMENTS

PACKAGE TYPE	
PACKAGE SIZE	
PROJECT	

PACKAGE PHYSICAL CERTIFICATION	YES	NO
EMPTY CONTAINER AT START		
RUST HOLES OR DENTS		
MATERIAL IS AS CODED		
PROHIBITED MATERIALS		
LIQUIDS IN CONTAINER		
MINIMUM OF VOID SPACE		
PACKAGE SECURED		
DRAIN PLUG SECURED		
OVERPACK		
REPACK		

PLANT	PROD. MBA	MEF NO.

OCAR	SURV. NO.	GROSS WEIGHT

TARE WEIGHT

NET WEIGHT

GENERATOR SIGNATURE

SUPERVISOR SIGNATURE DATE

FS-F-1945-1 (REV. 11/20/92)

FIGURE 7

DRUM VENTING RECORD
Form FMPC-OPR-3228

FMPC
DRUM VENTING RECORD

Plant: _____

DRUM NUMBER	LOT NUMBER	MTC/SRC	DAMAGED/DEFORMED		DRUM VENTED		DATE	OPERATOR NAME AND BADGE NUMBER	OVERPACK	
			YES	NO	YES	NO			YES	NO

REMARKS: _____

FMPC-OPR-3228 (2 12/91)

REQUIREMENTS MANUAL

CONTROL NO. 6989

RM-0005

Issue Date: 03-17-95

Revision No. 6

NON-CONTROLLED COPY

FEMP

LOT MARKING

AND

COLOR CODING SYSTEM

AUTHORIZED BY: D R Dunaway for 3/7/95

Gail T. Phillips, Vice President — Date

FERNALD ENVIRONMENTAL MANAGEMENT PROJECT

Fernald Environmental Restoration Management Corporation
P. O. BOX 528704
CINCINNATI, OHIO 45253-8704

RECORD OF ISSUE/REVISIONS

DATE	REV. NO	DESCRIPTION AND AUTHORITY
08-23-91	0	Original issue of RM-0005 supersedes Internal Special FMPC-2178, Dated 7/1/89.
12-27-91	1	Incorporation of T91-004, T91-005, T91-006, and T91-031 per Request No. S92-034, S92-035, S92-036, and S92-037, initiated by D. Dunaway.
06-05-92	2	Minor revision to RM-0005 updating source or origin codes in Chapter 4, per Request No. S92-076, initiated by D. Dunaway.
05-05-93	3	Minor revision adding additional information to sections 1, 3, and 4 per Request No. S93-050, initiated by D. Dunaway. This document supersedes RM-0005, dated 06/05/92, Rev. 2.
08-23-93	4	Minor revision reflecting additions and corrections per request No. S93-124, initiated by D. Dunaway. This document supersedes RM-0005, dated 05/05/93, Rev. 3.
-27-94	5	Minor revision incorporating SDCs per Request No. S94-012, initiated by D. Dunaway. This document supersedes RM-0005, dated 08-23-93, Rev. 4.
03-17-95	6	Minor revision incorporating corrections dictated per request S94-183 initiated by Don Dunaway. This document supersedes RM-0005, dated 4/27/94, Rev. 5.

LIST OF EFFECTIVE PAGES

CHAPTER	PAGE	REV. NO	ISSUE DATE
_____	ii through iv	6	03-17-95
_____	v through vl	5	04-27-94
1	1.1	5	04-27-94
1	1.2 through 1.4	0	08-23-91
1	1.5	5	04-27-94
1	1.6	1	12-27-91
1	1.7 through 1.10	0	08-23-91
1	1.11 through 1.13	6	03-17-95
1	1.14	5	04-27-94
1	1.15	6	03-17-95
1	1.16	0	08-23-91
1	1.17	6	03-17-95
1	1.18 through 1.21	0	08-23-91
2	2.1	0	08-23-91
2	2.2	4	08-23-93
2	2.3	0	08-23-91
3	3.1	0	08-23-91
3	3.2 through 3.3	4	08-23-93
3	3.4	0	08-23-91
3	3.5	4	08-23-93
3	3.6	6	03-17-95
3	3.7	4	08-23-93

LIST OF EFFECTIVE PAGES

CHAPTER	PAGE	REV. NO	ISSUE DATE
3	3.8	0	08-23-91
3	3.9 through 3.12	6	03-17-95
3	3.13	0	08-23-91
3	3.14	6	03-17-95
3	3.15 through 3.17	0	08-23-91
3	3.18 through 3.21	6	03-17-95
4	4.1	6	03-17-95
4	4.2	3	05-05-93
4	4.3	6	03-17-95
4	4.4 through 4.7	0	08-23-91
4	4.8	6	03-17-95
4	4.9	0	08-23-91
4	4.10 through 4.12	6	03-17-95
4	4.13	5	05-05-93
4	4.14	0	08-23-91
4	4.15	6	03-17-95
4	4.16	4	08-23-93
4	4.17	6	03-17-95
4	4.18	0	08-23-91
4	4.19	2	06-05-92
4	4.20 through 4.21	6	03-17-95
4	4.22	1	12-27-91

INTRODUCTION

The Fernald Environmental Management Project (FEMP) Lot Marking and Color Coding System has been in use at the FEMP to provide a means for the control and accountability of nuclear materials. Although the FEMP is no longer a production facility, there is still a large amount of nuclear material stored at the FEMP that requires the same degree of control and accountability. The same system used for the identification of nuclear materials is now being applied to hazardous waste, i.e., Resource Conservation and Recovery Act (RCRA) and Toxic Substance Control Act (TSCA) waste and low-level radioactive waste in Fernald Environmental Management Corporation (FERMCO) remediation activities. Control and accountability is required to satisfy Department of Energy (DOE) and Environmental Protection Agency (EPA) concerns. FERMCO is in the process of identifying all packaged materials on-site according to the Lot Marking and Color Coding System. This procedure is intended to provide the information necessary to identify any container of waste material.

* * * * * *

CHAPTER 1 Lot Marking System

The FEMP lot mark will consist of five basic elements as follows:

	Element	Thorium	Enriched, Depleted, and Normal Uranium
1.0	Production Order Number (P. O.)/Materials Disposition Order (MDO) Number	None	4 digits
2.0	Origin or Source Code	3 digits	3 digits
3.0	Class or Enrichment Code combined with	1 digit	1 digit
4.0	Material Description Code	3 digits	3 digits
5.0	Lot or Sequence Number	4 digits	4 digits
	Total Digits	11 digits	15 digits

Elements 1.0, 2.0, 3.0, 4.0, and 5.0 are alphanumeric (contain numbers or letters or both).

Element 4.0 and 5.0 are numbers only.

Elements 3.0 and 4.0 will be combined into a four-character material type code.

Elements 2.0, 3.0 and 5.0 will be separated from their predecessors by hyphens or dashes.

A detailed description of the composition of each element follows:

1.0 Production Order Number (P.O.)/Materials Disposition Order Number (MDO)

This designation was assigned by the Production Scheduling Section to identify certain key production activities. It usually consisted of one letter followed by three digits, e.g., A500. In the lot marking system, it is always used in identification of enriched, depleted and normal materials. Waste packaged specifically for shipment to NTS may be marked with the PO Number N003 for uranium and N004 for thorium.

CHAPTER 1 Lot Marking System (cont.)

When enriched uranium materials of irregular percent U^{235} content, for which no Production Order is applicable, are received or generated, special designations are assigned as outlined in the following paragraphs:

1.1 "S", followed by three digits indicating the shipper's percent U^{235} to two decimal places, is used to identify receipts of unusual U^{235} levels.

1.2 "S", followed by three digits, indicates the onsite producing plant's best estimate of the highest isotopic processed over a particular campaign. It is used to identify residue materials generated from the processing of materials of irregular U^{235} levels in FEMP operations. Materials containing up to 9.99 percent U^{235} will be coded as S plus the 3 digit isotopic value. Materials containing 10.00 to 19.99 percent U^{235} will be coded with only the isotopic value (4 digits).

1.3 "W", followed by three digits, indicates the onsite generating plant's best estimate of the highest isotopic associated with nonrecoverable contaminated waste material.

CHAPTER 1 Lot Marking System (cont.)

1.4 "X", followed by three digits, as indicated in the summary below, designating a range of percent U^{235}, will be used to identify certain residues produced from the mixing of materials of regular production but differing U^{235} levels (all numbers are inclusive):

1.4.1 X948 for 0.148 to 0.193 & 0.207 to 0.709

1.4.2 X110, X111, X118 & X119 for 0.710 to 0.712

1.4.3 X008 for 0.713 to 0.756

1.4.4 X884 for 0.757 to 0.853

1.4.5 X500 for 0.867 to 0.940

1.4.6 X888 for 0.954 to 1.243

1.4.7 X767 for 1.257 to 1.593

1.4.8 X911 for 1.607 to 2.093

1.5 "P", followed by three digits, indicates the onsite producing plant's estimate of the highest isotopic associated with uranium products or residues containing trace quantities of plutonium requiring special handling.

1.6 "R", followed by three digits, indicate the onsite producing plant's estimate of the highest isotopic associated with uranium products or residues containing RCRA mixed hazardous materials requiring special handling.

2.0 Origin or Source Code

This is a three-digit code with a block of 100 numbers assigned to each plant, as indicated in the following table. The plants are divided into sub-areas with subordinate blocks of numbers assigned to each.

FEMP Origin or Source Code

000-099	Reserved for future needs	500-599	Plant 5
		600-699	Plant 6
100-199	Plant 1	700-799	Miscellaneous facilities
200-299	Plants 2 & 3		
300-399	Pilot Plant	800-899	Plant 8
400-499	Plant 4	900-999	Plant 9

CHAPTER 1 Lot Marking System (cont.)

2.1 For example, Plant 5 is assigned 500-599 and the Reduction Area in Plant 5 is assigned 510 to 529. Within the area, each operation or piece of equipment which may generate a material for coding is assigned a source number. In the Plant 5 Metal Reduction Area, the Rockwell furnaces are assigned 516 and the breakout area dust collectors 520. The intention is to provide a flexible system which can be used to identify a particular item of equipment as a source, if this is desirable, or to allow coding by general area or by plant if this is all that is required.

2.2 A complete list describing all FEMP Source or Origin codes currently assigned will be found in Chapter 4.

2.3 Offsite origin codes used in processing receipts from other nuclear facilities are alphabetically designated using the three-letter Reporting Identification Symbol (RIS) of the shipper. See discussion on special handling of external receipts on page 1.11.

3.0 Class or Enrichment Code

This code consists of one digit or letter designating the general class or enrichment into which the material falls. Those categories currently most important in our operations have been assigned a number or letter as indicated.

CHAPTER 1 Lot Marking System (cont.)

Class or Enrichment Codes - Alphabetic

Code	Category	Detail	$\%U^{235}$	Additive or Alloy Level
A	Normal	Alloy		Alloy
B	Enriched	Alloy	Various	Alloy
C	Enriched		2.10	Other[1]
D	Depleted			Standard
E				
F				
G	Normal			Alloy 601
H	Enriched		0.947	Alloy 601
J				
K	Environmental Projects			
L	Enriched		0.947	Other[1]
M	Enriched		1.25	Alloy 601
N	Normal	Waste	0.710 to 0.712	None
P	Depleted	Waste	<0.710	None
Q				
R				
T	Thorium			None
U				
V	Enriched	Waste	>0.712	None
W				
X	Enriched		Other[1]	Other[1]
Y				
Z				

NOTE: Letters I, O, and S will not be used.

[1] Not specified. Refer to P.O. for U^{235} or additive level.

CHAPTER 1 Lot Marking System (cont.)

R

Class or Enrichment Codes - Numeric

Code	Category	Detail	$\%U^{235}$	Additive or Alloy Level
1	Normal		0.710 to 0.712	Std
2	Enriched	Recycle Tails	Various	None
3	Enriched		1.10	Std
4	Enriched		1.25	Std
5	Enriched		0.947	Std
6				
7	Enriched	Sweetener	Various	None
8	Enriched		0.86	Std
9	Enriched		2.10	Alloy 601
0	Enriched		Other[1]	Std

[1] Not specified. Refer to P.O. for U^{235} or additive level.

The use of this code in combination with the Material Description Code makes it possible to assign the same material description code to similar materials regardless of their class, enrichment or special nature.

For ready reference, a table of class codes arranged by material categories, $\%U^{235}$ and additive or alloy levels is also included below.

CHAPTER 1 Lot Marking System (cont.)

Class Codes by Material Categories

Category	Detail	$\%U^{235}$	Additive or Alloy Level				
			None	Std	601[2]	Other[2,3]	Alloy[4]
Depleted				D			
Depleted	Waste	<0.710	P				
Normal	Waste	0.710 to 0.712	N				
Enriched	Waste	>0.712	V				
Enriched		0.86		8			
Enriched		0.947		5	H	L	
Enriched		1.10		3			
Enriched		1.250		4	M		
Enriched		2.10			9	C	
Enriched	Alloy	Other[1]		0		X	B
Enriched	Recycle Tails	Various	2				
Enriched	Sweetener	Various	7				
Thorium			T				

[1] Not specified. Refer to P.O. for U^{235} or additive level.

[2] Properly applied to only material which has actually achieved this additive level; not appropriate for UO_3, UF_4, or derbies.

[3] Any additive level other than "Standard" or Alloy 601; refer to P.O. or I.P.O. (Interplant Production Order) for details.

[4] Materials, ordinarily from offsite, containing a concentration of alloying materials usually far above additive (ppm) levels.

4.0 Material Description Code

This is a three digit code, subdivided into residue and product categories as follows:

Low Grade Residues	000-099
High Grade Residues	100-149
Refinery Feeds	150-199
Intermediate Products	200-299
Remelt Feeds	300-399
Casting Products	400-449
Rolling and Extrusion Products	450-499
Machining Products	500-599

The intent in setting up the material descriptions was to make them general whenever possible, with the Class and Source Codes aiding in the specific identification of the material.

A complete list of all Material Description Codes currently assigned will be found in Chapter 3.

The one-digit or letter Class or Enrichment Code and the three-digit Material Description Code are combined into a four-character Material Type Code which is the basic unit of the FEMP Lot Marking system.

4.1 The low grade residue category (000-099) is intended to include all low uranium or thorium content residues and some higher grade uranium or thorium content residues which require extensive handling and processing before use as oxidation or refinery feed. In general, the low grade residues have been arranged in order of increasing quality. In other words, the lowest uranium or thorium content and lowest quality materials are designated by lower numbers and the high quality materials by higher numbers.

4.2 High grade residues (100-149) are, in general, high uranium or thorium content residues which require some processing such as screening or oxidation. They correspond in many cases to the feed for Plant 8.

4.3 Refinery feeds (150-199) are materials which were suitable for introduction into the refinery without further processing.

4.4 The intermediate product category (200-299) includes products from the various processes involved in converting refinery feed to metal. It also includes recycle metal which requires some pretreatment such as sawing or pickling before remelting.

4.5 Remelt feeds (300-399) are materials ready for remelt without further treatment.

4.6 Casting products (400-449), rolling and extrusion products (450-499), and machining products (500-510) are the products from these operations.

5.0 Lot or Sequence Number

This is a four-digit number which is used to identify consecutive lots of specific material in sequence where more than one lot is produced per month. Where not more than one lot is produced per month, the lot sequence number indicates the consecutive month of production starting with January 1962 as lot 0001. October 1991 is lot 0358.

To identify the category of trash, the lot or sequence number should include the product month number (May 1989 = 329), preceded by a numeric code that represents the category of 003 material. These categories are:

1 - Glass
2 - Rubber Hose
3 - Plastic
4 - Metal
5 - Concrete, Ceramics, Soil
6 - Contaminated Burnables
7 - Oily Rags, Air Filters and Gaskets
8 - Floor Sweepings
9 - Other - Stencil type of trash on containers

6.0 Additional Information

6.1 Examples of Lot Marking

The preceding sections of this discussion have been generalized to explain the intent of the system. The following examples are offered to illustrate the application of the general system structure in developing lot markings to identify specific material produced at the FEMP. Marking of material received from offsite is discussed in subsequent paragraphs.

Example 1 (Normal) H110 - 263 - 1200 - 0418

H110	Applicable to P.O. H110
263	Produced in Plant 2/3 (Refinery), Denigration System North Side Packaging
1	"Normal" Uranium
200	UO_3, Product
0418	Lot Sequence Number

Example 2 (Enriched) A500 - 965 - 5069 - 0541

A500	Applicable to P.O. A500
965	Produced in Plant 9, Sump Liquor Processing Area
5	0.947% U^{235} Enriched Uranium
069	Wet Sump Cake, Non-Oily, Non-Halide
0541	Lot Sequence Number

Example 3 (Thorium) 380 - T069 - 0126

380	Produced in Pilot Plant Sump Area
T	Thorium
069	Wet Sump Cake, Non-Oily, Non-Halide
0126	Lot Sequence (Indicates June 1972)

Example 4 (Depleted) A948 - 951 - D110 - 0329

A948	Applicable to P.O. A948
951	Produced in Plant 9, Le Blond Rapid Borer
D	Depleted Uranium
110	Non-briquettable Chips and Turnings for Oxidation
0329	Lot Sequence (Indicates May 1989)

Example 5 (Depleted) W020 - 501 - P003 - 6329

W020	Applicable to Waste (0.20% U^{235})
501	Plant 5 Maintenance
P003	Depleted Nonrecoverable Trash - for storage or shipment for offsite burial
6	Contaminated Burnables
329	May 1989

6.2 Lot Marking of External Receipts

Lot marking of material received from offsite by FERMCO will conform in general to the format described in previous sections. There are, however, certain exceptions which should be noted:

6.2.1. The Source Code will be the three-letter Reporting Identification Symbol (RIS) as illustrated in the table below.

6.2.2. The Lot Sequence Number will be the DOE Form 741 number assigned by the shipper in all cases except:

FTA Extrusions - Use 0000

Example 6 (Depleted Receipt) H082 - FTA - D455 - 0000

H082	Applicable to P.O. H082
FTA	RMI Company, Inc. (Shipper)
D	Depleted Uranium
455	Mark 31 Extruded Tubes - Inner
0000	Indeterminate Lot Sequence Number

6.3 OFFSITE and miscellaneous Source Codes

The table on page 1-12 shows the OFFSITE and miscellaneous source codes that have been used for lot marking material received from offsite.

SOURCE OR ORIGIN CODES FOR OFFSITE RESIDUES AND SCRAP AT THE FEMP

SOURCE CODE	NAME OF SHIPPER	PLANT	ADDRESS
AIC	Atomics International	NA Aviation	Canoga Park, California
AGT	General Electric Company	ANP Project	Cincinnati, Ohio
ALA	Sandia Corp.	Sandia Lab.	Albuquerque, New Mexico
ALD	Sandia Corp.	Sandia	Livermore, California
ALO	Dow Chemical	Rocky Flats	Golden, Colorado
ARF	Rockwell International	Rocky Flats	Golden, Colorado
ARM	IIT Research Inst.		Chicago, Illinois
ASA	Dow Chemical Company	Rocky Flats	Golden, Colorado
ASI	Advanced Sciences, Inc		Fernald, Ohio; Oak Ridge, TN
ATA	Mason & Hanger	Silas Mason	Burlington, Iowa
AUA	Los Alamos Nat. Lab.		Los Alamos, New Mexico
AVA	Monsanto	Mound	Miamisburg, Ohio
AVB	EG&G	Mound	Miamisburg, Ohio
AWA	Mason & Hanger	Pantex	Amarillo, Texas
AXA	General Electric Company	Neutron	St. Petersburg, Florida
AYA	Mason & Hanger		San Antonio, Texas
AZA	Mason & Hanger		Fort Campbell, Kentucky
BBA	Bridgeport Brass Company	Extrusion Plant	Ashtabula, Ohio
BMI	Battelle Memorial Inst.		Columbus, Ohio
BWD	Martin Marietta	Gaseous Diff.	Oak Ridge, Tennessee
BXA	Martin Marietta	Gaseous Diff.	Portsmouth, Ohio
BYC	Martin Marietta	Gaseous Diff.	Paducah, Kentucky
BZA	Brookhaven Laboratory		Upton, New York
CAA	USAEC	Chicago Office	Chicago, Illinois

CHAPTER 1 Lot Marking System (cont.)

SOURCE OR ORIGIN CODES FOR OFFSITE RESIDUES AND SCRAP AT THE FEMP (cont.)

SOURCE CODE	NAME OF SHIPPER	PLANT	ADDRESS
CAE	Atomics International	NA Aviation	Canoga Park. California
CAF	Battelle Memorial Inst.		Columbus, Ohio
CAK	Ames Laboratory	Iowa State U.	Ames, Iowa
CBH	New Brunswick Laboratory	NBL	New Brunswick, New Jersey
CBJ	New Brunswick Laboratory		Argonne, Illinois
CCP	MIT		Cambridge, Mass.
CCS	Babcock and Wilcox Company	Research Cen.	Lynchburg, Virginia
CDY	Whittaker Corporation	Nuclear Metals	West Concord, Mass.
CGE	General Electric Company	ANP Project	Cincinnati. Ohio
CKY	Union Carbide	Gaseous Diff.	Paducah, Kentucky
CNL	Chem-Nuclear Services	Laboratory	Greenville, South Carolina
COR	CORE	Laboratory	Casper, Wyoming
CTC	Clemson Technical Center	Laboratory	Anderson, South Carolina
CWA	Fermi Laboratory		Batavia, Illinois
CYT	Union Carbide	Y-12 Plant	Oak Ridge, Tennessee
CZA	Argonne National Laboratory		Argonne, Illinois
CZC	Argonne National Laboratory		Argonne, Illinois
C40	C4=CRU4, 0=1st digit of five digit well drilling number		FEMP
C50	C5=CRU5, 0=1st digit of five digit well drilling number		FEMP
C51	C5=CRU5, 1=1st digit of five digit well drilling number		FEMP
C52	C5=CRU5, 2=1st digit of five digit well drilling number		FEMP
DCC	Nuclear Fuel Services, Inc.	Davidson Chem.	Erwin, Tennessee
DCM	Datachem	Laboratory	Salt Lake City, Utah
DYA	Sylcor Division	Sylvania EPI	Hicksville, L.I., New York
DZA	Westinghouse Savannah River Co.	Savannah River	Aiken, South Carolina
EPI	Environmental Physics	Laboratory	Charleston, South Carolina
FAA	Oak Ridge Operations	USDOE	Oak Ridge, Tennessee
FAK	Middlesex Storage Plant	USAEC	New Brunswick, New Jersey
FAL	University of Virginia		Charlottesville, Virginia
FAQ	National Lead	Albany	Albany, New York
FAV	Kerr-McGee Nuclear Products		Cushing, Oklahoma
FAX	Nuclear Fuel Services, Inc.	Davidson Chem.	Erwin, Tennessee

SOURCE OR ORIGIN CODES FOR OFFSITE RESIDUES AND SCRAP AT THE FEMP (cont.)

SOURCE CODE	NAME OF SHIPPER	PLANT	ADDRESS
FBA	General Electric Company	Energy Systems	Evendale, Ohio
FBB	General Electric Company	NMPO	Idaho Falls, Idaho
FBE	New Brunswick Laboratory	USAEC	New Brunswick, New Jersey
FBX	Vitro Chemical Company		Chattanooga, Tennessee
FCZ	Tennessee Nuclear Spec.		Jonesboro, Tennessee
FTA	Reactive Metals Inc.	Extrusion Plant	Ashtabula, Ohio
FUA	Reactive Metals Inc.	Extrusion Plant	Ashtabula, Ohio
FVA	National Lead of Ohio	FMPC	Cincinnati, Ohio
FVB	General Atomic	Storage Fac.	Youngsville, North Carolina
FVC	FERMCO*	FEMP**	Cincinnati, Ohio
FWA	Mallinckrodt Chemical Works		Weldon Spring, Missouri
FXA	Goodyear Atomic	Gaseous Diff.	Portsmouth, Ohio
FYA	Union Carbide	Gaseous Diff.	Paducah, Kentucky
FYC	Martin Marietta	Gaseous Diff.	Paducah, Kentucky
FZA	Union Carbide	Gaseous Diff.	Oak Ridge, Tennessee
FZB	Union Carbide	Y-12 Plant	Oak Ridge, Tennessee
FZC	Union Carbide	ORNL	Oak Ridge, Tennessee
FZE	Martin Marietta	Gaseous Diff.	Oak Ridge, Tennessee
FZF	Martin Marietta	Y-12 Plant	Oak Ridge, Tennessee
FZG	Martin Marietta	ORNL	Oak Ridge, Tennessee
GAT	Goodyear Atomic	Gaseous Diff.	Portsmouth, Ohio
GDA	General Dynamics	General Atomic	San Diego, California
HGE	General Electric Company	Hanford	Richland, Washington

* WMCO - WEMCO, January 1986 - November 1992

** FMPC changed to FEMP August 1991

SOURCE OR ORIGIN CODES FOR OFFSITE RESIDUES AND SCRAP AT THE FEMP (cont.)

SOURCE CODE	NAME OF SHIPPER	PLANT	ADDRESS
HRA	Rockwell Int.	Hanford	Richland, Washington
HUA	Westinghouse Hanford Co., HEDL	Hanford	Richland, Washington
HUD	Westinghouse Hanford Co., CPD	Hanford	Richland, Washington
HUE	Westinghouse Hanford Co., DRD	Hanford	Richland, Washington
HVA	Atlantic Richfield	Hanford	Richland, Washington
HWA	Isochem, Inc	Hanford	Richland, Washington
HXA	United Nuclear Corp. Inc.	Hanford	Richland, Washington
HYA	Battelle Memorial Inst., PNL	Hanford	Richland, Washington
ITA	ITAS	Laboratory	Earth City, Missouri
ITC	IT	Laboratory	Oak Ridge, Tennessee
HZA	General Electric Company	Hanford	Richland, Washington
JSA	Allied Chemical	Aerojet	Idaho Falls, Idaho
JSB	Aerojet Nuclear	Idaho Falls	Idaho Falls, Idaho
JSG	EG&G Idaho	Idaho Falls	Idaho Falls, Idaho
JWB	Idaho Nuclear Corp.	Idaho Falls	Idaho Falls, Idaho
JXI	Westinghouse Idaho Nuclear Co.	Idaho Falls	Idaho Falls, Idaho
KMG	Kerr-McGee Nuclear Products	Cimarron	Crescent, Oklahoma
KZA	Knolls Atomic Power Laboratory		Schenectady, New York
LAB	University of California	Lawrence Lab.	Livermore, California
LAE	Atomics International		Canoga Park, California
LAL	Rockwell International		Canoga Park, California
LAQ	Bureau of Mines		Albany, Oregon
LAW	(Gulf) General Atomic		San Diego, California
LAZ	General Electric Company	Nuclear Energy	San Jose, California
LLB	Sandia Corp.	Livermore	Livermore, California

SOURCE OR ORIGIN CODES FOR OFFSITE RESIDUES AND SCRAP AT THE FEMP (cont.)

SOURCE CODE	NAME OF SHIPPER	PLANT	ADDRESS
LZA	University of California	Berkeley	Berkeley, California
LZB	University of California	Livermore	Livermore, California
MAA	Worchester Polytechnic	USAEC	New York, New York
MAD	Pratt & Whitney Aircraft Div.	CANEL	Middletown, Connecticut
MAP	Aeroprojects, Inc.		West Chester, Pennsylvania
MAY	Nat. Bureau of Standards		Washington, D. C.
MBB	Reactive Metals Inc.	Extrusion Plant	Ashtabula, Ohio
MBL	Martin Marietta	Nuclear Div.	Baltimore, Maryland
MBM	MIT		Cambridge, Mass.
MBN	Nuclear Metals Inc.	Textron	West Concord, Mass.
MBP	U. of Rochester		Rochester, New York
MBR	Babcock and Wilcox Company	R&D Div.	Lynchburg, Virginia
MBT	Babcock and Wilcox Company	R&D Div.	Lynchburg, Virginia
MBU	United Nuclear Corp.	Development	White Plains, New York
MBW	Babcock and Wilcox Company		Lynchburg, Virginia
MBY	Vitro Laboratories		West Orange, New Jersey
MCW	Mallinckrodt Chemical Works	Uranium Div.	Weldon Spring, Missouri
MCY	Westinghouse Electric Co.	NES	Pittsburgh, Pennsylvania
MIO	Nuclear Metals Inc.		West Concord, Mass.
MPW	Pratt & Whitney Aircraft Div.	CANEL	Middletown, Connecticut
MSA	USAEC, NY Operations		New York, New York
NBL	New Brunswick Laboratory	USAEC	New Brunswick, New Jersey
NBX	Middlesex Storage Plant	USAEC	New Brunswick, New Jersey

CHAPTER 1 Lot Marking System (cont.)

SOURCE OR ORIGIN CODES FOR OFFSITE RESIDUES AND SCRAP AT THE FEMP (cont.)

SOURCE CODE	NAME OF SHIPPER	PLANT	ADDRESS
NCF	National Carbon Co.	Union Carbide	Fostoria, Ohio
NLA	National Lead	Albany	Albany, New York
NMC	Martin Marietta	Nuclear Div.	Middle River, Maryland
NME	Nuclear Mat. & Equip. Corp.	NUMEC	Apollo, Pennsylvania
OGE	General Electric Company	NM Propulsion	Cincinnati, Ohio
ORF	EG&G	Rocky Flats	Golden, Colorado
PAB	Duquesne Light Co.	Shippingport	Shippingport, Pennsylvania
PAP	Babcock and Wilcox Company		Apollo, Pennsylvania
PZA	Westinghouse Electric Co.	Bettis APL	West Mifflin, Pennsylvania
QAA	USAEC	Headquarters	Washington, D. C.
QTA	Quanterra	Laboratory	Earth City, Missouri
QTC	Quanterra	Laboratory	Oak Ridge, Tennessee
RFW	Roy F. Weston		Lionville, PA
SAF	Mason & Hanger	Silas Mason	Fort Campbell, Kentucky
SBN	Mason & Hanger	Silas Mason	San Antonio, Texas
SBX	Monsanto	Mound	Miamisburg, Ohio
SEG	Scientific Ecology Group		Fernald, Ohio; Oak Ridge, TN
SRS	Sylcor Division	Sylvania EPI	Hicksville, L.I., New York
RBR	Brazil		
TOA	K-65, Q-11		
TCT	Tri City Testing		St. Louis, Missouri
VAC	National Research		Cambridge, Mass.
VCC	Vitro Chemical Company		Chattanooga, Tennessee
VDM	Envirocare		Salt Lake City, Utah
VXB	UNC Industries (Waste)	Hanford	Richland, Washington
WCP	Combustion Engineering, Inc.	Naval Reactors	Windsor, Connecticut
WEB	Westinghouse Power Div.	Bettis APL	Pittsburgh, Pennsylvania
XHP	General Atomic	Storage Fac.	Youngsville, North Carolina
XWD	Lockheed	Laboratory	Las Vegas, Nevada
YAK	Department of the Navy	NFEC	Alexandria, Virginia

SOURCE OR ORIGIN CODES FOR OFFSITE RESIDUES AND SCRAP AT THE FEMP (cont.)

SOURCE CODE	NAME OF SHIPPER	PLANT	ADDRESS
YAM	Coast Guard Academy		New London, Connecticut
YAQ	National Electric Coil		Louisville, Kentucky
YDE	Nuclear Fuel Services	West Valley	West Valley, New York
YEC	Kerr-McGee	Cimarron	Crescent, Oklahoma
YEF	Smithsonian Inst.	Hist. & Tech.	Washington, D. C.
YJL	Colgate University		Hamilton, New York
YLE	Westinghouse	Waltz Mill	Madison, Pennsylvania
YPF	U. of Alabama at Auburn		Auburn, Alabama
YQK	GSA Stockpile		Washington, D. C.
YST	TNS		Jonesboro, Tennessee
YQM	Frankfork Arsenal	DOD	Philadelphia, Pennsylvania
YUD	Exxon Nuclear	Hanford	Richland, Washington
YVX	Nuclear Metals		Concord, Mass.
ZCM	Bucknell University		Lewisburg, Pennsylvania
ZCY	Carnegie-Mellon U.		Pittsburgh, Pennsylvania
ZDB	Case Western Reserve U.		Cleveland, Ohio
ZDC	Catholic University		Washington, D. C.
ZFZ	Fairleigh Dickenson U.		Teaneck, New Jersey
ZDP	University of Cincinnati		Cincinnati, Ohio
ZDS	Clarke College		Dubuque, Iowa
ZDT	Clarkson University		Potsdam, New York
ZEF	Combustion Engineering		Windsor, Connecticut
ZIB	Scientific Ecology		Oak Ridge, Tennessee

CHAPTER 1 Lot Marking System (cont.)

SOURCE OR ORIGIN CODES FOR OFFSITE RESIDUES AND SCRAP AT THE FEMP (cont.)

SOURCE CODE	NAME OF SHIPPER	PLANT	ADDRESS
ZKB	Iowa State University		Ames, Iowa
ZKL	Kansas State U.		Manhattan, Kansas
ZLD	Ledoux & Co.		Teaneck, New Jersey
ZLR	Louisiana Tech. U.		Ruston, Louisiana
ZLU	University of Louisville		Louisville, Kentucky
ZMH	Manhattan College		Riverdale, Bronx, New York
ZMK	Marquette University		Milwaukee, Wisconsin
ZMR	University of Maryland		College Park, Maryland
ZND	University of Minnesota		Minneapolis, Minnesota
ZNE	3M Company		St. Paul, Minnesota
ZNG	University of Mississippi		University, Mississippi
ZNX	National Lead	Albany	Albany, New York
ZOV	Manufacturing Sciences		
ZPG	University of Nevada		Reno, Nevada
ZQC	Northeastern University		Boston, Mass.
ZQG	Northwestern University		Chicago, Illinois
ZQM	Nuclear Fuel Services, Inc.		Erwin, Tennessee
ZQN	Nuclear Mat. & Equip. Corp.	NUMEC	Apollo, Pennsylvania
ZQX	Ohio University		Athens, Ohio
ZSF	Pittsburgh University		Pittsburgh, Pennsylvania
ZSK	Princeton University		Princeton, New Jersey
ZST	Chamberlain Mfg.		Waterloo, Iowa
ZVF	Syracuse University		Syracuse, New York

SOURCE OR ORIGIN CODES FOR OFFSITE RESIDUES AND SCRAP AT THE FEMP (cont.)

SOURCE CODE	NAME OF SHIPPER	PLANT	ADDRESS
ZVX	Texas Tech. University		Lubbock, Texas
ZWB	Toledo University		Toledo, Ohio
ZWY	Utah State University		Logan, Utah
ZXA	Vanderbilt University		Nashville, Tennessee
ZXC	U. of Virginia		Charlottesville, Virginia
ZXF	Villanova University		Villanova, Pennsylvania
ZXH	Virginia Polytechnic Inst.		Blacksburg, Virginia
ZXZ	Washington University		St. Louis, Missouri
ZYG	West Virginia Inst. of Tech.		Montgomery, West Virginia
ZYP	Westinghouse	Atomic Power	Cheswick, Pennsylvania
ZZA	University of Wisconsin		Madison, Wisconsin
ZZM	Yale University		New Haven, Connecticut

7.0 SOLVENT AND ORGANIC CHEMICALS NAMES TO BE STENCILED ON CONTAINERS

	Acetone
	Acetonitrile
	Agitene
	Benzene
	n-Butyl alcohol
	Carbon disulfide
	Carbon tetrachloride
	Chlorinated fluorocarbons
P	Chlorobenzene
P	Chlordane
	Chloroform
	m-Cresol
	o-Cresol
	p-Cresol
	Cresols
	Cresylic Acid (Cresols plus phenols)
	Cyclohexane
	Cyclohexanone
P	2, 4-D
P	o-Dichlorobenzene
P	1, 4-Dichlorobenzene
	1, 2-Dichloroethane
	1, 1-Dichloroethylene
	2, 4-Dinitrotoluene
	1, 4-dioxane
P	Endrin
	2-Ethoxyethanol
	Ethyl acetate
	Ethyl benzene
	1, 1, 2-Trichloro-1, 2, 2-trifluoroethane
	Ethyl ether
P	Heptachlor (and its hydroxide)
P	Hexachlorobenzene
	Hexachlorobutadiene
	Hexachloroethane
	Isobutanol
P	Lindane
	Methanol
P	Methoxychlor
	Methyl ethyl ketone (2-Butanone)
	Methyl isobutyl ketone
	Methylene chloride
	Nitrobenzene
	2-Nitropropane
P	Pentachlorophenol
	Phenol
	Pyridine
	Tetrachloroethylene
	Toluene
P	Toxaphene
P	2, 4, 5-TP acid Silvex
	1, 1, 1-Trichloroethane
	1, 1, 2-trichloroethane
	Trichloroethylene
	Trichlorofluoromethane
P	2, 4, 5-Trichlorophenol
P	2, 4, 6-Trichlorophenol
	Vinyl chloride
	Xylene

P = Pesticide

CHAPTER 2 Color Coding System

In addition to the lot marking system described for identifying nuclear materials, color coding is applied as a secondary method of designating depleted, normal, and enriched uranium and thorium.

Three basic colors, black, red and white, are used for painting the body of containers in service at the FEMP.

Black drums are used for depleted uranium, normal uranium, unrestricted (for Nuclear Safety) enriched uranium compounds and residues, RCRA and TSCA waste and thorium.

All-red drums are used for enriched, restricted uranium (e.g., mass, geometry, or concentration).

White drums and white metal boxes are used for offsite shipment of low-level uranium waste; white drums are used for thorium waste.

Container identification markings required for long-term storage such as lot marks, weights, drum numbers, alloying chemical symbols and percent U^{235} are routinely applied by stencil over the basic paint colors as specified in Table I. "Markal" or equivalent type white or black paint sticks are used for applying temporary identification markings to residue and waste containers and to other specific materials in the production areas, including some offsite receipts and the reidentification of materials on the storage pad. Pre-printed identification labels that contain barcodes may also be used.

Color coding of black drums will be further implemented by application of a narrow stripe around the circumference above the gross, tare and net weight information on each container. The colors to be used for this stripe are as follows:

CHAPTER 2 Color Coding System (cont.)

Material in Black Drums	% U^{235}	Stripe Color
(a) Depleted Uranium	<0.710	Green
(b) Normal Uranium	0.710 to 0.712	Yellow
(c) Enriched Uranium - Unrestricted compounds and residues	>0.712	Red
(d) Thorium		Blue
(e) RCRA and TSCA waste		None

An exception to the container body painting and stencilling requirement is permitted for enriched oxides packaged in 6" diameter by 15" high metal cans. A narrow red-tape stripe around the periphery of the can and a printed label are applied.

It will not be necessary to apply a stripe to all drums.

Containers characterized and identified as containing RCRA and TSCA waste and which have been declared to be below the economic discard limit will have their color stripe obliterated with black paint before they are placed in storage in the RCRA warehouses.

NOTE: Drums with color stripes which are already in storage need not be changed.

Red targets or red-white cards, or yellow-white or green-white cards and pressure-sensitive tape are used to color code enriched, normal and depleted uranium metal on skids, hoppers, dollies, metal pieces not in containers, or boxes and major components of process equipment such as vessels, sumps, machinery, dust collectors, etc. An explanation of their use is detailed in procedures 20-C-100, "Moving and Storing Depleted, Normal, and Enriched Uranium Materials < 20% U^{235} and Thorium Metal and Materials", and 20-C-904, "SOP-Nuclear Safety General Requirements."

Old identification markings will be obliterated with paint immediately upon emptying containers.

Offsite receipts which do not comply with FEMP color coding requirements are color coded with a band of paint around the periphery of the container - yellow for normal, red for enriched, green for depleted, and blue for thorium, as a substitute for painting the entire container. The proper color coding is applied as soon as the analytical results are received from the Laboratory.

CHAPTER 2 Color Coding System (cont.)

TABLE I

FEMP Color Code Specification
for Basic Container Paints and
Identification Markings

Type of Material	Basic Container Paint Color	Identification Markings Paint Color	Stripe Paint Color
Normal uranium	Black	White	Yellow
Enriched uranium, unrestricted	Black	White	Red
Enriched uranium mass, geometry or concentration restricted	Red	White	None
Depleted uranium	Black	White	Green
Thorium	Black	White	Blue
Thorium Waste	White	Black	Blue
Uranium Waste Shipments	White	Black	None
RCRA and TSCA Waste	Black	White	None

CHAPTER 3 MATERIAL DESCRIPTION CODES

LOW-GRADE RESIDUES

001 DISCARD PROCESS RESIDUES, TRAILER CAKES, WASTE SLURRIES, RAFFINATES, ETC.

002 SUMP CAKE - COPPER CONTAMINATED, LOW URANIUM

003 NON-RECOVERABLE TRASH - FOR STORAGE OR SHIPMENT FOR OFFSITE BURIAL, see p. 1.09

004 CONTAMINATED STEEL AFTER WASHING AND/OR CLEANING

005 CONTAMINATED ZIRCONIUM

006 CONTAMINATED LEATHER GLOVES FOR LAUNDRY

007 TRAILER CAKES, WASTE SLURRIES, RAFFINATES NOT MEETING DISCARD SPECIFICATION

008 GRIT BLAST RESIDUE

009 CONTAMINATED OIL - SOLUBLE; COOLANT

010 CONTAMINATED WATER, CONTAINING CHLORIDES

011 CONTAMINATED SOIL, ROCKS, SAND, BRICKS AND CERAMICS

012 CONTAMINATED WATER OR SUMP LIQUOR, NON-CHLORIDE

013 CONTAMINATED SOLVENT OR ORGANIC CHEMICAL - STENCIL TYPE OF CHEMICAL OR SOLVENT ON CONTAINER (SEE LIST OF SOLVENT AND CHEMICAL NAMES ON PAGE 1.21.)

014 GLASS AND SAMPLE BOTTLES

015 CONTAMINATED OIL, INSOLUBLE

016 CONTAMINATED COPPER - FOR DISCARD

017 CONTAMINATED GRAPHITE - UNCRUSHED BUT BROKEN INTO LARGE PIECES

CHAPTER 3 MATERIAL DESCRIPTION CODES (cont.)

LOW-GRADE RESIDUES (cont.)

018 CONTAMINATED ALUMINA-SODA LIME (HIGH Cl^-)

019 CONTAMINATED MAGNESIUM

020 CONTAMINATED MERCO-DRI AND HILCO CAKE

021 DRUM DECONTAMINATION RESIDUES; WET MgF_2

022 CONTAMINATED TBP AND/OR KEROSENE MIXTURES AND SLUDGES

023 OILY MgF_2

024 CONTAMINATED GRAPHITE - CRUSHED

025 CONTAMINATED METALLIC FILTER ELEMENTS

026 CONTAMINATED CARBON FILTER ELEMENTS

027 CONTAMINATED RAGS, PAPER AND POLYETHYLENE

028 CONTAMINATED ASBESTOS MATERIALS

029 DUST COLLECTOR BAGS

030 MAGNESIUM OXIDE AND MAGNESIUM ZIRCONATE FROM CRUCIBLE CLEANOUT

031 ROASTED MgF_2 (BLENDED WITH OTHER MATERIALS)

032 INCINERATOR ASHES - MATERIAL PASSING THROUGH GRATE OR SCREEN

033 INCINERATOR CINDERS - MATERIAL NOT PASSING THROUGH GRATE OR SCREEN

034 MgF_2 FOR MILLING OR DISCARD

035 MgF_2 OR CaF_2, GOOD LINER MATERIAL

036 MgF_2, -20 MESH, HIGH FREE METAL FOR PLANT 8 ROASTING (ENRICHED ONLY)

CHAPTER 3 MATERIAL DESCRIPTION CODES (cont.)

LOW-GRADE RESIDUES (cont.)

037 MgF_2, GROUND

038 MgF_2, +20 MESH, LOW U CONTENT, TO BE CRUSHED

039 SLUDGES, OILY

040 SLUDGES, FOR BLENDING AND SCREENING

041 SLUDGES, OILY, FOR OXIDATION, HIGH FREE METAL

042 SLUDGES, CLEANOUT, NON-OILY, FOR ROASTING

043 SLUDGES, SOLVENT - STENCIL TYPE OF SOLVENT ON CONTAINER (SEE LIST OF SOLVENT AND ORGANIC CHEMICAL NAMES ON PAGE 1.21.)

044 SLUDGES, SALT, SOFT, CHLORIDE (FOR PLANT 8 RECOVERY)

045 SLUDGES, SALT, SOFT, NON-CHLORIDE

046 SLUDGES, NON-OILY, FOR OXIDATION INCLUDING HIGH OR LOW FREE METAL

047 SAMPLES, NON-METALLIC, MISCELLANEOUS

048 OIL BURNER ASH

049 LEAD AND LEAD-CONTAMINATED MATERIALS

050 PCB MATERIALS, BALLAST, PCB-CONTAMINATED RAGS

051 MERCURY-CONTAMINATED MATERIALS, MERCURY BATTERIES

052 BARIUM-CONTAMINATED MATERIALS

053 NON-BURNABLE METAL WITH URANIUM CONTENT

054 HIGH LEVEL CLEANING RESIDUES

CHAPTER 3 MATERIAL DESCRIPTION CODES (cont.)

LOW-GRADE RESIDUES (cont.)

055 DEPLETED U METAL - NOT SUITABLE FOR REACTOR PRODUCT STREAMS (NOT TOP CROPS)

056 DEPLETED U INGOT CROPS (TOP CROPS) FROM PRIMARY INGOTS

057 WET CRUSHED SLAG FROM FURNACE POT BLOW-OUTS

058 CONTAMINATED CaF_2 - MgO

059 ASH FROM BURNING DUST COLLECTOR BAGS

060 FURNACE SALT, SOLIDIFIED, CHLORIDE (FOR PLANT 8 RECOVERY)

061 FURNACE SALT, SOLIDIFIED, NON-CHLORIDE

062 DUST COLLECTOR RESIDUES - HIGH FLUORIDE

063 KOH REVERSION CAKE

064 DUST COLLECTOR RESIDUES, PYROPHORIC, HIGH FLUORIDE

065 SCRAP SALTS, HIGH FLUORIDE, INCLUDING FLOOR SWEEPINGS

066 SCRAP SALTS, LOW FLUORIDE, INCLUDING FLOOR SWEEPINGS

067 WET SUMP OR FILTER CAKE, HALIDE CONTD

068 WET SUMP OR FILTER CAKE, OIL CONTD

069 WET SUMP OR FILTER CAKE, NON-OILY AND NON-HALIDE

070 ROCKWELL SPILLS

071 ROCKWELL CLEANINGS

CHAPTER 3 MATERIAL DESCRIPTION CODES (cont.)

LOW-GRADE RESIDUES (cont.)

072 U OR Th NITRATE SOLUTIONS, HIGH IMPURITY SUCH AS ZIRNLO DECOPPERING SOLUTIONS - FOR REFINERY PROCESSING

073 U OR Th CHLORIDE OR FLUORIDE SOLUTIONS, HIGH IMPURITY - SUCH AS PLANT 8 METAL DISSOLVER PRODUCT - NOT FOR REFINERY FEED

074 U OR Th SULPHATE SOLUTIONS

075 CLAD METAL FOR HNO_3 DISSOLVER

076 ZIRNLO ENDS - TO BE CLASSIFIED FOR RECOVERY

077 DRY CRUSHED SLAG FROM FURNACE POT BLOW-OUTS

078 OFF-SPEC Th OXALATE, FRENCH SOURCE

079 UNFIRED REDUCTION CHARGES PLUS MgF_2 FROM LINER CAVE-INS

080 PARTIALLY OXIDIZED METAL FOR SORTING CONTAINING METL-X

081 PARTIALLY OXIDIZED METAL FOR SORTING CONTAINING NO METL-X

082 OFF-SPEC UF_4 OR ThF_4

083 U OR Th CHLORIDE SALTS, REJECT

084 BAD REDUCTION (NO DERBY)

085 U_3O_8 - ROTEXED - OTHER THAN PLANT 8'S OWN PRODUCT

086 U308 ROTEXED - PLANT 8'S OWN PRODUCT NOT MEETING REFINERY SPECIFICATIONS FOR CONTINUOUS DIGESTION

087 ROASTED SUMP CAKE - HIGH FLUORIDE - FOR MILLING

CHAPTER 3 MATERIAL DESCRIPTION CODES (cont.)

LOW-GRADE RESIDUES (cont.)

088 UNROASTED BUT MILLED MgF_2 (BLENDED WITH OTHER MATERIALS)

089 U_3O_8 ROTEXED - FROM CONCRETED CHIPS - CALCIUM

090 THORIUM RESIDUES

091 MAGNESIUM DIURANATE

092 FILTERED SEWAGE

093 BIRD CARCASSES, DROPPINGS, AND CONTAMINATED MATERIALS

094 COPACKAGED URANIUM RESIDUES

095 COLD METAL OXIDES - NON RADIUM-BEARING

096 AUSTRALIAN RADIUM CAKE

097 RADIUM-BEARING MATERIALS - SAMPLES, K-65, INCLUDING Q-11 CONTAMINATED MATERIALS

098 MATERIAL HELD FOR HISTORICAL PURPOSES

099 CHIPPED FLOOR SEALANT AND CONTAMINATED MATERIALS

CHAPTER 3 MATERIAL DESCRIPTION CODES (cont.)

HIGH-GRADE RESIDUES

100 SCRAP U_3O_8 OR ThO_2, LOW FLUORIDE

101 SCRAP U_3O_8 OR ThO_2, HIGH FLUORIDE

102 SCRAP UO_2

103 INGOT CROPS (TOP CROPS) FROM PRIMARY INGOTS

104 METAL SPILLS AND EXTRUSION ENDS; METAL HIGH IN IMPURITIES AND SPILLS

105 ThO_2 PRODUCED FROM UNPURIFIED HANFORD THORIUM NITRATE VIA THORIA GEL PROCESS

106 CHIPS EMBEDDED IN CONCRETE - HIGH CALCIUM

107 CHIPS AND TURNINGS CONTAMINATED WITH NON-U MATERIALS - FOR OXIDATION

108 WET PHOSPHATE CAKE

109 SAWDUST FOR OXIDATION

110 NON-BRIQUETTABLE CHIPS AND TURNINGS FOR OXIDATION

111 BRIQUETTALE CHIPS AND TURNINGS FROM STANDARD METAL

112 BRIQUETTABLE CHIPS AND TURNINGS, HIGH IMPURITIES, FOR BRIQUETTING AND DOUBLE MELTING

113 ZIRCONIUM CLAD METAL, FROM OFFSITE, TO BE DECLAD BY ZIRNLO SYSTEM

114 ZIRNLO FEED, CLASSIFIED AND SAWED

115 WET THORIUM OXALATE CAKE

CHAPTER 3 MATERIAL DESCRIPTION CODES (cont.)

HIGH-GRADE RESIDUES (cont.)

116 WET THORIUM HYDROXIDE

117 WET AMMONIUM DIURANATE CAKE

118 HOLLOW CORES WITH BROKEN DRILLS - ALL TYPES - BITS TO BE REMOVED AND CORES PICKLED PRIOR TO REMELT

119 SOLID METAL, OTHER THAN CORES, WITH EMBEDDED STEEL

120 CHEMICAL REJECT PRIMARY INGOTS

121 U_3O_8, +8 MESH - HIGH FLUORIDE

122 U_3O_8, +8 MESH - LOW FLUORIDE

123 CALCIUM URANATE

124 ZIRNLO; PARTIALLY DECLAD FUEL ELEMENTS

125 UNRECYCLED SLAG +20 MESH, BALL MILL PRODUCT

126 OXIDES MIXED WITH ZIRCONIUM BUT CLAD WITH OTHER ELEMENTS

128 CLAD URANIUM METAL; DECLAD BY MACHINING OR CHEMICAL TREATMENT

129 DIRTY PRILL, CODE 5 DERBIES, AND PLANT 1 TITAN MILL CLEAN-OUT, HIGH U CONTENT

130 PARTIALLY OXIDIZED METAL FOR DISSOLVER

131 PARTIALLY OXIDIZED METAL OXIDATION FEED

132 DUST COLLECTOR RESIDUES, LOW FLUORIDE

CHAPTER 3 MATERIAL DESCRIPTION CODES (cont.)

HIGH-GRADE RESIDUES (cont.)

133 OXIDES CLAD OR MIXED WITH ALUMINUM

134 U_3O_8 FOR REOXIDATION

135 DUST COLLECTOR RESIDUE, HIGH FLUORIDE, GREATER THAN 20% ASSAY

136 METAL TO BE OXIDIZED

137 MISCELLANEOUS MATERIAL - RECOVERY METHOD TO BE DETERMINED (NOT FOR USE BY INDIVIDUAL PLANTS)

138 OXIDES CLAD OR MIXED WITH ANY METALLIC ELEMENT OTHER THAN ALUMINUM, ZIRCONIUM OR STAINLESS STEEL

139 URANIUM ALLOYED OR CANNED WITH ELEMENTS OTHER THAN ALUMINUM, MOLYBDENUM OR ZIRCONIUM

140 OXIDES CLAD OR MIXED WITH ZIRCONIUM

141 CLAD METAL FOR ACID DISSOLUTION - NOT FOR ZIRNLO PROCESSING

142 OXIDES CLAD OR MIXED WITH STAINLESS STEEL

143 ROASTED CALCIUM-PRECIPITATED SUMP AND FILTER CAKES

144 OFFSITE SUMP AND FILTER CAKES AFTER ROASTING AT FEMP

145 ROASTED AMMONIUM-PRECIPITATED SUMP AND FILTER CAKES

146 ROASTED MAGNESIUM-PRECIPITATED SUMP AND FILTER CAKES

147 ROASTED, MILLED AND/OR SCREENED ADU CAKE FOR SLAG LEACH DIGESTION

148 ROASTED, MILLED AND/OR SCREENED ADU CAKE FOR CONTINUOUS DIGESTION

CHAPTER 3 MATERIAL DESCRIPTION CODES (cont.)

REFINERY FEEDS

150 URANYL OR THORIUM NITRATE SOLUTION

151 OFF-SPEC ThO_2, FRENCH SOURCE

152 OXIDES SUITABLE FOR CASCADE FEED

153 -8 MESH PRODUCT FROM OXIDIZING +8 MATERIAL

154 U_3O_8 ROTEXED PLANT 8 FURNACE PRODUCT

155 U_3O_8 -8 MESH FROM ROTEXING OF OTHER THAN PLANT 8'S OWN PRODUCTS - LOW FLUORIDE

156 MILLED UO_2

157 REJECT UO_3

158 PHOSPHATE ASH

159 ROASTED, MILLED AND/OR SCREENED CALCIUM-PRECIPITATED SUMP AND FILTER CAKES

160 IMPURE URANYL OR THORIUM NITRATE - SOLID

161 URANIUM CARBIDE, UC

162 OFFSITE SUMP AND FILTER CAKES AFTER ROASTING, MILLING, AND/OR SCREENING AT FEMP

163 ROASTED, MILLED AND/OR SCREENED AMMONIUM-PRECIPITATED SUMP AND FILTER CAKES

164 ROASTED, MILLED AND/OR SCREENED MAGNESIUM-PRECIPITATED SUMP AND FILTER CAKES

165 U_3O_8 - NOT REQUIRING RE-OXIDATION

166 UO_2 (OR ThO_2) PELLETS - REFINERY FEED

CHAPTER 3 MATERIAL DESCRIPTION CODES (cont.)

REFINERY FEEDS (cont.)

167 UO_2 (OR ThO_2) POWDER - REFINERY FEED

168 CRUSHED FURNACE SALTS AND SLUDGES NON-CHLORINE

169 ROASTED FURNACE SALTS AND SLUDGES NON-CHLORINE

170 ORE CONCENTRATE - MISCELLANEOUS

190 U_3O_8 FOR RE-OXIDATION

191 RE-OXIDIZED ENRICHED CALCINER U_3O_8 FOR SCREENING AND MILLING

192 OXIDE FOR SCREENING AND MILLING

196 U_3O_8 SUITABLE FOR CASCADES FROM EVAPORATOR - CALCINER

197 U_3O_8 SUITABLE FOR CASCADES FROM METAL OXIDATION

198 UO_2 SUITABLE FOR CASCADES

199 UF_4 SUITABLE FOR CASCADES

CHAPTER 3 MATERIAL DESCRIPTION CODES (cont.)

INTERMEDIATE PRODUCTS

200 UO_3 PRODUCT

201 UO_3 REACTOR RECYCLE TAILS

202 UO_2 OR ThO_2 PRODUCT

203 UF_6, URANIUM HEXAFLUORIDE

204 PURIFIED URANYL OR THORIUM NITRATE SOLUTION

205 ThO_2 PRODUCED FROM SOL-GEL PROCESS

206 BLENDED UF_4 OR ThF_4 CHARGE

207 PURIFIED URANYL OR THORIUM NITRATE SOLID

208 ADU POWDER

209 URANIUM OR THORIUM TETRACHLORIDE

210 UF_4 OR ThF_4

211 UF_4 FROM PILOT PLANT UF_6

212 UF_4 FROM HANFORD UO_3

214 U_3O_8 FROM RECYCLE UO_3 (ROR PROCESS)

215 THORIUM HYDROXIDE, DRY

216 CHARGED UF_4 POTS, WIP

218 CLEAN PRILL FOR DOUBLE MELTING

219 METAL FROM SPILLS FOR DOUBLE MELTING

220 CODE 2 DERBIES FOR DOUBLE MELTING OR SHOT CLEANING

221 SOLID METAL FOR PICKLING PRIOR TO REMELT DOES NOT REQUIRE BLENDING (<12")

CHAPTER 3 MATERIAL DESCRIPTION CODES (cont.)

INTERMEDIATE PRODUCTS (cont.)

222 SOLID METAL - INCLUDES PHYSICAL BUT NOT CHEMICAL REJECT INGOTS; TO BE SAWED OR CRUSHED AND PICKLED PRIOR TO REMELT (≥12")

223 SOLID METAL TO BE SAWED, SHEARED, OR CRUSHED, BUT NOT PICKLED PRIOR TO REMELT

224 SOLID METAL, NOT PICKLED, OTHER THAN SPILLS AND TOP CROPS, FOR DOUBLE MELT

225 SR STANDARD METAL TO BE SAWED AND PICKLED PRIOR TO REMELT

227 METAL SAMPLES FOR DOUBLE MELTING

228 SOLID METAL TO BE PICKLED

229 FIRST GENERATION TOP CROPS FROM PRODUCT INGOTS - FOR PRIMARY INGOT REMELT CHARGES

230 SAWED SECTIONS, REQUIRING PICKLING, FROM PRIMARY INGOTS CONTAINING FIRST GENERATION TOP CROPS

231 SAWED SECTIONS, REQUIRING PICKLING, FROM PRIMARY INGOTS CONTAINING NO TOP CROP METAL

232 PICKLED METAL FOR DOUBLE MELTING - OTHER THAN FIRST GENERATION TOP CROPS

233 CLASSIFIED SHAPES FOR DOUBLE MELTING

234 PHYSICAL REJECT BILLETS TO BE SAWED PRIOR TO REMELT

235 TUBULAR ELEMENTS TO BE CRUSHED

236 EXTRUSION BUTTS TO BE PICKLED

237 PARTIALLY DECLAD METAL, OTHER THAN ZIRNLO, FOR DOUBLE MELTING

CHAPTER 3 MATERIAL DESCRIPTION CODES (cont.)

INTERMEDIATE PRODUCTS (cont.)

238 SOLID METAL FOR PICKLING AND DOUBLE MELTING, OTHER THAN FIRST GENERATION TOP CROPS

239 CHEMICAL REJECT SAWED REMELT METAL - TO BE CAUSTIC LEACHED AND PICKLED

240 DOUBLE MELT INGOTS TO BE SAWED AND PICKLED PRIOR TO REMELT

241 DOUBLE MELT INGOTS TO BE SAWED, BUT NOT PICKLED, PRIOR TO REMELT

242 CHEMICAL REJECT INGOTS (AND OTHER CHEMICAL REJECT MATERIAL) TO BE SAWED AND PICKLED, OR TO BE ROLLED, SHEARED AND PICKLED, PRIOR TO REMELT

243 CHEMICAL REJECT SOLID METAL TO BE SAWED, BUT NOT PICKLED PRIOR TO REMELT

244 CHEMICAL REJECT DOUBLE MELT INGOTS FROM DOUBLE MELTING TO BE SAWED AND PICKLED

245 CHEMICAL REJECT DOUBLE MELT SOLID METAL TO BE SAWED, BUT NOT PICKLED, PRIOR TO REMELT

246 INGOTS FROM OFFSITE TO BE REWORKED

251 CHEMICAL REJECT SOLID METAL FOR PICKLING PRIOR TO REMELT

252 BRIQUETTES HIGH IN IMPURITIES FOR DOUBLE MELTING

253 REJECT RODS

254 CODE 4 OR BOTTOM BURNOUT DERBIES FOR DOUBLE MELTING

260 TOP CROP FROM PRODUCT 4A FLAT BILLETS (SECOND GENERATION)

CHAPTER 3 MATERIAL DESCRIPTION CODES (cont.)

INTERMEDIATE PRODUCTS (cont.)

261 PHYSICAL SCRAP FROM RECYCLE 4A FLAT BILLETS (SECOND GENERATION)

262 CHEMICAL SCRAP FROM RECYCLE 4A FLAT BILLETS (SECOND GENERATION)

263 OFFSITE 4A SCRAP RETURNS (SECOND GENERATION)

CHAPTER 3 MATERIAL DESCRIPTION CODES (cont.)

REMELT FEEDS

300 DERBIES, CODE 1 AND CODE 3

302 BRIQUETTES

303 CHIPS-CLEANED NON-BRIQUETTABLE-SUITABLE FOR CASTING

304 SOLID REMELT METAL - LOW IMPURITIES - DOES NOT REQUIRE BLENDING OR PICKLING - NOT FROM DOUBLE MELTS

305 PICKLED ARF REMELT METAL

306 EXPERIMENTAL SHAPES - INCLUDING CLASSIFIED SHAPES NOT TO BE CRUSHED

307 ZIRNLO PRODUCT

308 INGOT CROPS AND DUDS

310 PICKLED CROPS FROM SR METAL

311 SR STANDARD SOLID METAL - FOR REMELT

313 PICKLED CROPS FROM HW METAL

314 PICKLED PRIMARY INGOT SECTIONS CONTAINING FIRST GENERATION TOP CROPS

315 PICKLED PRIMARY INGOT SECTIONS CONTAINING NO TOP CROP METAL

316 PICKLED Ti ALLOY REMELT SCRAP - DOES NOT REQUIRE BLENDING (NOT DERIVED FROM PRIMARY INGOTS)

322 CHEMICAL REJECT SOLID REMELT METAL - DOES NOT REQUIRE PICKLING

323 REJECT ELEMENTS - OUTER

324 REJECT ELEMENTS - INNER

CHAPTER 3 MATERIAL DESCRIPTION CODES (cont.)

EMELT FEEDS (cont.)

325 REJECT CORES

326 REJECT BILLETS, INCLUDING SAWED BILLET SECTIONS

327 PICKLED REJECT BILLETS OR BILLET SECTIONS

330 PRIMARY INGOT SECTIONS, NOT PICKLED, CONTAINING FIRST GENERATION TOP CROPS

331 PRIMARY INGOT SECTIONS, NOT PICKLED, CONTAINING NO TOP CROP METAL

333 PICKLED CHEMICAL REJECT CROPS

334 PICKLED CHEMICAL REJECT CROPS FROM DOUBLE MELT INGOTS

335 CRUSHED TUBULAR ELEMENTS

336 PICKLED EXTRUSION BUTTS

337 DECLAD METAL, OTHER THAN ZIRNLO

340 SECTIONS FROM CHEMICAL REJECT PRIMARY INGOTS, NOT PICKLED

CHAPTER 3 MATERIAL DESCRIPTION CODES (cont.)

CASTING PRODUCTS

400 STANDARD INGOTS - HANFORD WORKS (HW)

401 SPECIAL SOLID INGOTS OR SLABS

402 SPECIAL HOLLOW INGOTS

403 SPECIAL CASTINGS, INCLUDING STATIC AND CENTRIFUGAL

404 N REACTOR INGOTS - RAW

405 N REACTOR INGOTS - DIRECT CASTINGS FOR FINISHED BILLET MACHINING

406 MARK 31 CASTINGS - RAW - INNER

407 MARK 31 CASTINGS - RAW - OUTER

408 MARK 31 CASTINGS - FINISHED - INNER

409 MARK 31 CASTINGS - FINISHED - OUTER

410 N REACTOR INGOTS - FINISHED

411 URANIUM SHOT

412 MARK 15 CASTINGS - RAW - INNER

413 MARK 15 CASTINGS - RAW - OUTER

414 MARK 15 CASTINGS - FINISHED - INNER

415 MARK 15 CASTINGS - FINISHED - OUTER

416 MARK 25 CASTINGS - RAW - INNER

417 MARK 25 CASTINGS - RAW - OUTER

418 MARK 25 CASTINGS - FINISHED - INNER

419 MARK 25 CASTINGS - FINISHED - OUTER

CHAPTER 3 MATERIAL DESCRIPTION CODES (cont.)

ROLLING AND EXTRUSION PRODUCTS

450 BILLETS, ROLLING MILL

451 MARK 15 EXTRUDED TUBES - INNER

452 MARK 15 EXTRUDED TUBES - OUTER

453 N REACTOR EXTRUDED TUBES

454 N REACTOR RAW BILLETS - SAWED EXTRUSIONS

455 MARK 31 EXTRUDED TUBES - INNER

456 MARK 31 EXTRUDED TUBES - OUTER

457 SPECIAL RODS AND/OR TUBES

458 HW EXTRUDED TUBES - ROD-IN-TUBE

459 N REACTOR RAW BILLETS - UPSET FORGED

461 MARK 25 EXTRUDED TUBES - INNER

462 MARK 25 EXTRUDED TUBES - OUTER

CHAPTER 3 MATERIAL DESCRIPTION CODES (cont.)

MACHINING PRODUCTS

500 MARK 31 ELEMENTS - INNER

501 MARK 31 ELEMENTS - OUTER

502 HANFORD INGOT CORES

503 N REACTOR FINISHED BILLETS FROM EXTRUSIONS

504 CORES OTHER THAN 502

505 N REACTOR FINISHED BILLETS FROM DIRECT CASTINGS

506 SPECIAL MACHINED SHAPES

507 MARK 15 ELEMENTS - INNER

508 MARK 15 ELEMENTS - OUTER

509 MARK 25 ELEMENTS - INNER

510 MARK 25 ELEMENTS - OUTER

CHAPTER 3 MATERIAL DESCRIPTION CODES (cont.)

ENVIRONMENTAL PROJECTS

601 CLEAN SOIL - TREATED

602 CLEAN ROCKS - TREATED

603 GLASS FROM VITRIFICATION

604 CONSTRUCTION - RUBBLE FROM NON-CONTAMINATED AREA

CHAPTER 4 SOURCE OR ORIGIN CODES

PLANT 1 CODES

100 **PLANT 1 GENERAL**

101 PLANT 1 MAINTENANCE

102 MAINTENANCE SHOP (RCRA MATERIALS)

103 OIL STORAGE AREA (RCRA & TSCA)

105 PLANT 1 CONSTRUCTION WASTE

107 SOURCE UNKNOWN

110 **PLANT 1 MILLING**

111 DRUM DUMPER

112 TITAN MILL

113 DUST COLLECTOR NUMBER 64

114 DUST COLLECTOR NUMBER 76

115 THREE PHASE GALIGHER SAMPLER

116 HOPPER OR DRUM FILLING STATION

117 HOFFMAN VACUUM

118 SAFE GEOMETRY DIGESTION

119 FITZ MILL

120 **PLANT 1 STILL**

121 DRUM SIPHON

122 STILL TANK

123 WATER DRUMMING

124 RECLAIMED FLUID DRUMMING

CHAPTER 4 SOURCE OR ORIGIN CODES (cont.)

PLANT 1 CODES (cont.)

130 **PLANT 1 DRUM RECONDITIONING**

131 SHOT SCREEN

132 WHEELABRATOR SHOT BLAST UNIT

133 DRUM ROLLER

134 PANGBORN DUST COLLECTOR

135 DRUM PAINTING BOOTH

136 DRUM DRYER

137 DRUM BALER

140 **PLANT 1 SAMPLING**

141 SMALL SHEATHED AUGER

142 WHEELABRATOR DUST COLLECTOR

143 LARGE SHEATHED AUGER

144 PIPE SAMPLER

145 SLY DUST COLLECTOR

150 COPPER SHREDDER

151 COPPER PILE

175 PLANT 1 SOIL REMOVAL PROJECT

176 PLANT 1 SOIL TREATABILITY PROJECT

CHAPTER 4 SOURCE OR ORIGIN CODES (cont.)

PLANTS 2 AND 3 CODES

200 **PLANTS 2 AND 3 GENERAL**

201 PLANTS 2 AND 3 MAINTENANCE

202 MAINTENANCE SHOP (RCRA MATERIALS)

203 OIL STORAGE AREA (RCRA & TSCA)

210 **PLANT 2 DIGESTION**

211 SOUTH SIDE DIGESTORS

212 NORTH SIDE DIGESTORS

213 TURNER-HAWES DUST COLLECTOR

214 DAY-HOFFMAN DUST COLLECTOR

215 SLY DUST COLLECTOR

216 SPARKLER FILTER

220 **METAL DISSOLVER**

221 OLIVER FILTER

222 METAL DISSOLVER GRATE

225 **EXTRACTION**

226 SOUTH SIDE EXTRACTION COLUMN LINE

227 NORTH SIDE EXTRACTION COLUMN LINE

228 MIXER-SETTLER

230 **SOLVENT TREATMENT**

235 **HOT RAFFINATE BUILDING**

236 FILTERS

240 TRASH BALER AND KELLY INCINERATOR (WEST AREA)

CHAPTER 4 SOURCE OR ORIGIN CODES (cont.)

PLANTS 2 AND 3 CODES (cont.)

245 **REFINERY SUMP SYSTEM**

246 DORR THICKENERS

247 FILTERS

250 **RAFFINATE EVAPORATORS**

255 **ABSORBERS**

256 PLANT COLUMN ABSORBERS

260 **DENIGRATION SYSTEM**

261 SCRUBBER SYSTEM

262 SOUTH SIDE PACKAGING

263 NORTH SIDE PACKAGING

267 **SAFE GEOMETRY EVAPORATOR CALCINER**

268 **PULLMAN VACMOBILE**

270 **DRUM DIGESTION**

271 CARTRIDGE FILTER

272 PLATE AND FRAME FILTER

CHAPTER 4 SOURCE OR ORIGIN CODES (cont.)

PILOT PLANT CODES

300 **PILOT PLANT GENERAL**

301 PILOT PLANT MAINTENANCE

302 MAINTENANCE SHOP (RCRA MATERIALS)

303 OIL STORAGE AREA (RCRA & TSCA)

310 **GREEN SALT PRODUCTION**

311 REACTOR NUMBER 1

312 REACTOR NUMBER 2

313 DUST COLLECTORS

314 VACUUM - PORTABLE

315 AUTOCLAVE

316 COLD TRAP

320 METAL REDUCTION PILOT PLANT

321 SLY DUST COLLECTOR

322 HOFFMAN VACUUM

323 ROCKWELL FURNACES

324 BREAKOUT STATION

330 **DERBY SHOT BLASTING**

331 PANGBORN ROTO-BLAST UNIT

332 SPENCER VACUUM

333 EAST WHEELABRATOR DUST COLLECTOR

334 DUCLONE CYCLONE

CHAPTER 4 SOURCE OR ORIGIN CODES (cont.)

PILOT PLANT CODES (cont.)

335 **SHOT PRODUCTION UNIT**

336 SHOT TANK

340 **PILOT PLANT REMELT AND CASTING**

341 REMELT FURNACE

343 CRUCIBLE BURNOUT

345 SAWS

346 WEST WHEELABRATOR DUST COLLECTOR

347 HOFFMAN VACUUM

350 **PILOT PLANT HEAT TREATING**

351 SALT BATH

352 WATER QUENCH

353 OIL QUENCH

355 **PILOT PLANT METAL DISSOLVING**

356 HNO_3 PICKLING OR DECOPPERING

357 HF OR HCl DISSOLVER

358 FILTER

359 NEUTRALIZER

360 **PILOT PLANT AUXILIARY EQUIPMENT**

361 PRECIPITATOR

362 FILTER

364 TRAY DRYER-THORIUM

CHAPTER 4 SOURCE OR ORIGIN CODES (cont.)

ILOT PLANT CODES (cont.)

365 **PILOT PLANT OXIDIZING**

366 SETTLING TABLE

367 OXIDATION FURNACE

368 AIR FILTER

369 **S&W GLO-BAR FURNACE**

370 **PILOT PLANT MILLING**

371 JAW CRUSHERS

372 BALL MILL-THORIUM

375 **PILOT PLANT SOLVENT EXTRACTION**

376 SIX-INCH EXTRACTION COLUMN

377 BOILDOWN TANKS

378 PRODUCT TANK

379 TWO-INCH EXTRACTION COLUMN

380 **PILOT PLANT SUMP**

381 SUMP CATCH BASIN

382 PRECIPITATOR

383 UNCONTAMINATED SUMP

CHAPTER 4 SOURCE OR ORIGIN CODES (cont.)

PLANT 4 CODES

400 **PLANT 4 GENERAL**

401 PLANT 4 MAINTENANCE

402 MAINTENANCE SHOP (RCRA MATERIALS)

403 OIL STORAGE AREA (RCRA & TSCA)

407 BANK 7

408 BANK 8

409 BANK 9

410 TANK FARM

411 PLANT 4 SAMPLING

420 **DUST COLLECTORS - GENERAL**

421 DUST COLLECTOR G4-1

422 DUST COLLECTOR G4-2

423 DUST COLLECTOR G4-15

424 DUST COLLECTOR G4-4

425 DUST COLLECTOR G4-5

426 DUST COLLECTOR G4-6

427 DUST COLLECTOR G4-7

428 DUST COLLECTOR G4-8

429 DUST COLLECTOR G4-9

430 DUST COLLECTOR G4-10

431 DUST COLLECTOR G4-11

432 DUST COLLECTOR G4-12

433 DUST COLLECTOR G4-13

434 DUST COLLECTOR G4-14

435 **PLANT 4 SUMP**

CHAPTER 4 SOURCE OR ORIGIN CODES (cont.)

LANT 4 CODES (cont.)

440 **PACKAGING STATION - GENERAL**

441 EAST (NO. 1) PACKAGING STATION

442 WEST (NO. 2) PACKAGING STATION

443 SOUTHWEST (NO. 3) PACKAGING STATION

CHAPTER 4 SOURCE OR ORIGIN CODES (cont.)

PLANT 5 CODES

500 **PLANT 5 GENERAL**

501 PLANT 5 MAINTENANCE

502 MAINTENANCE SHOP (RCRA MATERIALS)

503 OIL STORAGE AREA (RCRA & TSCA)

505 PLANT 5 DUPLEX AREA

504 PLANT 5 SAMPLING

509 DRUM STORAGE PAD

510 **METAL REDUCTION AREA**

511 BLENDERS

512 BLENDING FILLING CAP AND LID AREA
DUST COLLECTORS 249, 250, 251, 253

513 JOLTER AREA
DUST COLLECTORS 247, 248

514 BOMB FILLING STATION

515 CAP AND LID

516 ROCKWELL FURNACES

517 COOLING TANKS

518 BREAKOUT STATIONS

519 EAST BREAKOUT AREA
DUST COLLECTORS 101, 256

520 WEST BREAKOUT AREA
DUST COLLECTORS 254, 267

521 DERBY QUENCH

522 SLAG CONVEYOR PIT

523 POT REAMING STATION

524 DUST COLLECTOR

CHAPTER 4 SOURCE OR ORIGIN CODES (cont.)

PLANT 5 CODES (cont.)

530 **CASTING AREA**

531 REMELT FURNACES

532 SEPARATION BOOTH

533 REMELT
DUST COLLECTOR 258, 260

534 CRUCIBLE BURNOUT

535 CRUCIBLE BURNOUT
DUST COLLECTOR 259, 261

536 SLY DUST COLLECTOR 100

537 GRAPHITE LATHE

538 HILCO OIL FILTER

539 BURNOUT AND MOLD TANKS

540 GRAPHITE BREAKUP STATIONS

545 **SUMP TREATMENT AREA**

550 **SAW AREA**

551 HACK SAW

552 NORTH CIRCULAR SAW

553 EAST CIRCULAR SAW

554 WEST CIRCULAR SAW

560 **EAST SLAG PLANT**

561 CRUSHER

562 COARSE SEPARATOR

PLANT 5 CODES (cont.)

563 FINE SEPARATOR

564 BIN 4: -20 MESH MAGNESIUM FLUORIDE

565 BIN 3: +20 MESH MAGNESIUM FLUORIDE

566 BIN 5, 6, 7, 8: MAGNESIUM FLUORIDE

570 **WEST SLAG PLANT**

571 CRUSHER

572 COARSE SEPARATOR

573 FINE SEPARATOR

574 -20 MESH MAGNESIUM FLUORIDE

575 +20 MESH MAGNESIUM FLUORIDE

576 GOOD LINER SOURCE

CHAPTER 4 SOURCE OR ORIGIN CODES (cont.)

PLANT 6 CODES

600 **PLANT 6 GENERAL**

601 PLANT 6 MAINTENANCE

602 MAINTENANCE SHOP (RCRA MATERIALS)

603 OIL STORAGE AREA (RCRA & TSCA)

605 PLANT 6 SAMPLING

610 **ROLLING**

611 INGOT FURNACE

612 BLOOMING MILL

613 CROP SHEAR OR GAG SHEAR

614 EQUALIZER FURNACE

615 CONTINUOUS MILL

616 FLYING SHEAR

617 COOLING BEDS

618 STRAIGHTENER

619 INSPECTION - ROD AREA

620 **MACHINING**

621 BLANKING ACMES

622 CROSS TRANSFERMATIC

623 CENTERLESS GRINDERS

624 DRILLING ACMES

625 SUNDSTRAND LATHES

626 HEALD BOREMATICS

627 TURRET LATHES

CHAPTER 4 SOURCE OR ORIGIN CODES (cont.)

PLANT 6 CODES (cont.)

631 BARDONS AND OLIVER CUTOFF LATHE

632 CNC MACHINE

640 **HEAT TREATING**

642 SALT-OIL FURNACE

643 NU SAL FURNACE

645 **BRIQUETTING**

646 CHIP CRUSHER

647 CHIP PICKLING TANKS

648 CHIP BRIQUETTING PRESS

650 **DUST COLLECTORS**

652 TURNER HAWES

655 **WATER TREATMENT AREA**

656 COLLECTION TANKS

657 PRECIPITATORS

658 FILTERS

659 HOFFMAN CLARIFIES

660 **DEGREASING AND PICKLING**

661 DERBY PICKLING

662 CORE PICKLING

663 REMELT METAL PICKLING

665 **INSPECTION**

CHAPTER 4 SOURCE OR ORIGIN CODES (cont.)

MISCELLANEOUS FACILITIES CODES

700 **WASTE MANAGEMENT**

701 MULTIPLE SOURCES

702 MAINTENANCE SHOP (RCRA MATERIALS)

703 OIL STORAGE AREA (RCRA & TSCA)

704 PLANT 7

705 CONSTRUCTION

706 PLANTWIDE EHSI - PHASE IV STORMWATER RUNOFF

707 BIODENITRIFICATION

708 KC-2, BUILDING 63

710 **K-65 GENERAL - AREA 34**

711 SILO #1 K-65

712 SILO #2 K-65

713 SILO #3 COLD-METAL OXIDE

714 SILO #4

715 BUILDING 64

716 BUILDING 65

717 BUILDING 65 - WEST PAD

718 BUILDING 67

719 BUILDING 68

721 CHEMICAL PITS - GENERAL

722 CHEMICAL PIT NO. 1

723 CHEMICAL PIT NO. 2

724 CHEMICAL PIT NO. 3

725 CHEMICAL PIT NO. 4

726 CHEMICAL PIT NO. 5

727 CHEMICAL PIT NO. 6

728 SURGE LAGOONS

CHAPTER 4 SOURCE OR ORIGIN CODES (cont.)

MISCELLANEOUS FACILITIES CODES (cont.)

729 ENVIRONMENTAL MONITORING

730 **LABORATORY GENERAL - BUILDING 15**

731 OPERATIONS & ENGINEERING SERVICES

732 ANALYTICAL LABORATORY

733 ANALYTICAL LABORATORY HAZARDOUS WASTE

734 BIO-CHEMISTRY LABORATORY

735 SERVICE - BUILDING 11

736 LAUNDRY

737 HUMAN RESOURCES AND GUARD HOUSE - BUILDING 28

738 GARAGE (RCRA)

739 GARAGE OIL (RCRA)

740 ADMINISTRATION - BUILDING 14

741 GARAGE - BUILDING 31

742 DECONTAMINATION - BUILDING 69

743 STORES-RECEIVING

744 TRUCK DOCK - PLANT 1

745 **MAINTENANCE SECTION**

746 MACHINE SHOP (RCRA)

747 MACHINE SHOP OIL STORAGE (RCRA & TSCA)

748 PAINT SHOP (RCRA)

749 INSTRUMENT SHOP (RCRA)

750 ELECTRIC SHOP

751 EXPANSION PLANT - BUILDING 51

755 SAFETY AND HEALTH - BUILDING 53

CHAPTER 4 SOURCE OR ORIGIN CODES (cont.)

.SCELLANEOUS FACILITIES CODES (cont.)

756 DOSIMETRY LABORATORY HAZARDOUS WASTE

759 BUILDING 3045 - LABORATORY MACHINE SHOP - RUST

760 ENGINEERING (NLO)

761 GENERAL SUMP

762 PLIBRICO INCINERATOR (NEAR SEWAGE PLANT)

763 OIL BURNER AT BOILER PLANT (OPERATED BY NLO PRODUCTION)

764 GRAPHITE BURNER

765 WATER TREATMENT

766 SEWAGE TREATMENT

767 BOILER PLANT

768 BOILER PLANT (RCRA)

769 BOILER PLANT OIL STORAGE (RCRA)

775 LAB MAINTENANCE SHOP (RCRA)

776 LAB OIL STORAGE AREA (RCRA & TSCA)

CHAPTER 4 SOURCE OR ORIGIN CODES (cont.)

PLANT 8 CODES

800 **PLANT 8 GENERAL**

801 PLANT 8 MAINTENANCE

802 MAINTENANCE SHOP (RCRA MATERIALS)

803 OIL STORAGE AREA (RCRA & TSCA)

805 DRUM WASHER

806 DRUM RECONDITIONING

810 **WET-CHEMICAL SYSTEM**

811 PRIMARY CALCINER

812 PLANT 8 MILLING

813 SUMP

814 DIGESTION

815 EIMCO FILTERS

816 PRECIPITATION

817 OLIVER FILTER

818 CALCINATION

819 LEACH TANK

820 **OXIDATION SYSTEM**

821 CRUSHER

822 ROTEX SCREENING

823 MUFFLE FURNACE

824 BOX FURNACE

825 OXIDATION FURNACE NUMBER 1

CHAPTER 4 SOURCE OR ORIGIN CODES (cont.)

PLANT 8 CODES (cont.)

826 ROTARY KILN - OLD UNIT

827 OXIDATION FURNACE NUMBER 2

828 PLANT 8 DUST COLLECTORS

830 ROTARY KILN FACILITY - NEW UNIT

836 THO_2 PLANT 8

845 HYDRAULIC SEPARATOR

852 BLENDING AND SCREENING OPERATION

853 OIL DECANTATION

854 DUST COLLECTOR & FILTER BAG WASHING

855 AIR SEPARATOR

856 HAND SORTING

CHAPTER 4 SOURCE OR ORIGIN CODES (cont.)

PLANT 9 CODES

900 **PLANT 9 GENERAL**

901 PLANT 9 MAINTENANCE

902 MAINTENANCE SHOP (RCRA MATERIALS)

903 OIL STORAGE AREA (RCRA & TSCA)

905 MAWS PROJECT

910 **REDUCTION**

911 JOLTERS

912 F MACHINE AND CAPPING

913 ROCKWELL FURNACES - MOLTEN SALT CLEANING

914 BREAKOUT STATION

915 TURNER-HAWES, HOFFMAN VACUUM SYSTEM

916 COOLING TANK

917 SPENCER PORTABLE VACUUM

920 **CASTING**

921 NPR FURNACE

922 CINCINNATI MILLING MACHINE

923 NPR SAWING

924 NPR PRIMARY HOFFMAN VACUUM UNIT

925 NPR BAG HOFFMAN VACUUM UNIT

926 NPR AAF DUST COLLECTOR

927 NPR AAF DUST COLLECTOR PRIMARY SEPARATOR

928 I&E FURNACE

929 I&E SEPARATING AND COOLING

930 I&E SAWING

931 I&E WHEELABRATOR DUST COLLECTOR

932 I&E PRIMARY HOFFMAN VACUUM UNIT

933 G9-NI 1035 DUST COLLECTOR

934 I&E HOFFMAN (BAG) VACUUM UNIT

935 **EXTRUSION SAWING**

CHAPTER 4 SOURCE OR ORIGIN CODES (cont.)

PLANT 9 CODES (cont.)

940 **MACHINING**

941 GISHOLT TURRET LATHE

942 J+L AUTOMATIC LATHE

945 L+S DUOMATIC LATHE

949 J+L TURRET LATHE

951 LE BLOND RAPID BORER

953 WARNER AND SWASEY LATHE

954 MONARCH ENGINE LATHE

955 **BRIQUETTING**

956 CRUSHER AND METSO WASH

957 CHIP PICKLING AND RINSING

958 CHIP CENTRIFUGING

959 MAGNETIC SEPARATOR & BRIQUETTE PRESS

960 **PICKLING**

961 REMELT PICKLING AND RINSING

962 CORE DEGREASING AND PICKLING

965 **SUMP LIQUOR PROCESSING**

966 COLLECTION TANKS

967 PRECIPITATORS

968 FILTERS

970 **HEAT TREATING**

PLANT 9 CODES (cont.)

980 **ZIRNLO PROCESS - GENERAL**

981 HACKSAW

982 DEGREASER

983 DECOPPERING

984 DEZIRCING

985 ACID FILTRATION

986 NEUTRALIZATION

987 NITRIC ACID PICKLE

988 KOH PICKLE

6989

STEP 4.

NON-CONTROLLED COPY

TABLE OF CONTENTS

1.0 PURPOSE 2

2.0 SCOPE 2

3.0 APPLICABLE DOCUMENTS 2
3.1 Source Documents 2
3.2 Reference Documents 2

4.0 DEFINITIONS 2

5.0 RESPONSIBILITIES 3

6.0 GENERAL 4

7.0 HEALTH AND SAFETY REQUIREMENTS 5

8.0 PROCEDURE 6
8.1 Receipt of LLRW and NM at Designated Storage Areas 6
8.2 Storage of LLRW and NM 7

RECORD OF ISSUE/REVISIONS 17

LIST OF TABLES

Table 1, Pallet Drum Capacity and Container Stacking Limits 10
Table 2, Container Inspection Categories 11

LIST OF FIGURES

Figure 1, FS-F-367, Permanent Inventory Record 12
Figure 2, FS-F-1990, -2220, -2221, NM Transfer Record/NM Receipt Record/ Material Identification Record 13
Figure 3, FS-F-1090-2, Waste Material Movement (Example) 14

LIST OF ATTACHMENTS

Attachment A, FMPC-REST-3183, Radioactive Material Container Pre-Storage Checklist (Example) 15

1.0 **PURPOSE**

1.1 The purpose of this procedure is to direct the receipt and storage of Low Level Radioactive Waste (LLRW) and Nuclear Material (NM).

2.0 **SCOPE**

2.1 This procedure is applicable to all designated LLRW and NM storage areas. This procedure is not applicable to the receipt and storage of Enriched Restricted Nuclear Material.

3.0 **APPLICABLE DOCUMENTS**

3.1 Source Documents

3.1.1 DOE Order 5480.19

3.1.2 D10-00-020, "Remediation Support Operations Division Document System"

3.2 Reference Documents

3.2.1 20-C-111, "Transport of Low Level Radioactive Waste and Nuclear Material"

3.2.2 SSOP-0067, "Spill Incident Reporting and Cleanup"

3.2.3 20-C-600, "Overpacking Defective Containers"

3.2.4 20-C-606, "Hazardous Material Spill Cleanup"

3.2.5 20-C-910, "Venting and Hydrogen Monitoring of Potentially Explosive Drums"

3.2.6 20-C-918, "Preparation For and Movement Of Unvented Drums"

3.2.7 RM-0005, "FEMP Lot Marking and Color Coding System"

3.2.8 20-C-001, "Changes to Form Entries"

4.0 **DEFINITIONS**

4.1 Bulge - A swollen area, a convex distortion, an outward bend which jeopardizes the integrity of the container.

4.2 Corrosion - A container exhibiting exterior rust which is flaking or discoloration and bulging from interior rust.

4.3 Dent - A crease, depression or hollow made by blow or pressure: a concave distortion which jeopardizes the integrity of the container. A dent in the top or bottom rim.

4.4 HAZWAT - Hazardous Waste Technician.

4.0 **DEFINITIONS** (cont.)

4.5 Hole - An opening in the container including a breach, gouge, puncture or leak.

4.6 Low Level Radioactive Waste (LLRW) - Waste that contains radioactivity and is not classified as high level waste, transuranic waste, spent nuclear fuel or 11 e(2) byproduct as defined by DOE Order 5820.2A.

4.7 Motor Vehicle Operator (MVO) - A classification of personnel trained and qualified to operate certain motor vehicles at the FEMP. Such vehicles include forklifts, handstackers, pickup trucks, etc.

4.8 Nuclear Material (NM) - Depleted or normal uranium; or enriched uranium.

4.9 Type 1 Container - A container with a hole from which material has flowed, or is flowing and is accumulating on the pallet or the pad.

4.10 Type 2 Container - A container with a hole from which material has flowed, or is flowing and is accumulating on the drum exterior only; no material on the pallet or pad.

4.11 Type 3 Container - A container exhibiting evidence of exterior contamination and/or corrosion without evidence of active material release. Severe corrosion, holes, dents and/or bulges which affect the container to the degree of potential release.

5.0 **RESPONSIBILITIES**

5.1 **Supervisors** shall be responsible for the following:

5.1.1 Notifying support organizations and coordinating support organization activities if assistance is required.

5.1.2 Ensuring that personnel are qualified to perform the assigned task.

5.1.3 Signing and/or distributing documentation as required by this procedure.

5.1.4 Ensuring that the receipt inspections required by this procedure are performed.

5.1.5 Upon notification of a spill, immediately reporting the incident by telephone or radio to the Assistant Emergency Duty Officer (AEDO) and the Radiological Control Department (See SSOP-0067, "Spill Incident Reporting and Cleanup and 20-C-606, "Hazardous Material Spill Clean Up")

5.1.6 Ensuring that authorized storage configurations are maintained as required by this procedure.

5.1.7 Ensuring that PPE specified by the work permit is worn.

5.1.8 Ensuring that any required contamination surveys have been performed prior to placing containers of LLRW and NM in storage.

5.0 **RESPONSIBILITIES** (cont.)

5.1.9 Reviewing applicable Material Safety Data Sheets (MSDS) with Operators.

5.1.10 Obtaining any required work permits.

5.2 **Operators** shall be responsible for complying with this procedure.

5.3 **Materials Control and Accountability** shall be responsible for the following:

5.3.1 Maintaining a current LLRW and NM inventory.

5.3.2 Preparing, maintaining, and signing transfer, inventory and identification records required in this procedure.

5.4 **Waste Characterization** shall be responsible for assuring the proper characterization and classification of FEMP material streams.

5.5 **Waste Operations Support** shall be responsible for designating storage locations.

6.0 **GENERAL**

6.1 Warnings, Cautions, and Notes shall precede the Section, Sub-Section, Item, Step, or Sub-Step to which they apply.

6.2 Containers of LLRW and NM shall be stored in the designated container storage locations. If such storage is not available, containers shall be stored on the best available hard surface as designated by Waste Operations Support. Metal boxes may be stored on gravel, if necessary, but four inch by four inch wooden supports are preferred.

6.3 Pallets can be lifted with a forklift from either end. When placing drums on a pallet, ensure that the resulting load is stable.

6.4 Except in the cases of the following three exemptions, straps shall be used during the movement of pallets to secure the drums and reduce the chance of an accidental spill. Exemptions:

6.4.1 When using hand-stackers to move drums on pallets,

6.4.2 When moving one pallet of drums within the buildings or tension support structures, **AND**

6.4.3 When moving one pallet of drums within a defined work area either inside or outside. For example, if an outside area is set up for repalletizing drums, the movement of pallets within this limited area would not require straps.

6.5 Movement of multiple pallets and the movement of pallets to or from elevations above two stacks high shall require the use of straps for securing the drums. The requirement to strap drums for movement only applies to drum(s) on pallets.

6.0 GENERAL (cont.)

6.6 In Plant 1, ensure that the containers are stored in the locations as marked on the Plant 1 pad unless directed to an unmarked location by the Supervisor. The Plant 1 pad pallet/drum storage locations are marked to ensure a 24-inch inspection aisle between each row of pallets and a minimum 50-inch forklift access on at least one side of the storage locations. Pallets/drums stored in an unmarked storage location shall be arranged to provide the above stated access.

6.7 Containers may be stored and stacked in accordance with Table 1, "Pallet Drum Capacity and Container Stacking Limits".

6.8 To be stacked per Table 1, pallets of drums must comply with the following conditions.

6.8.1 The pallets on which the drums are stored are in "good" condition. The pallets involved should be metal pallets or the treated wooden pallets.

6.8.2 The drums, especially 85-gallon drums, are centered on the pallets. All drums, regardless of capacity, when assembled on a pallet should be centered on the pallet and pushed close together. This ensures the load is centered on the pallet and improves stability. Proper centering of drums is especially critical for 85-gallon drums. 85-gallon drums should be placed three to a pallet in a triangle centered on the pallet. When properly centered, 85-gallon drums stick out three to four inches beyond the edge of the pallet. Without close attention, more of a drum may stick out over the edge causing the pallet to become less stable when stacked.

6.8.3 Drivers are able to align the pallets vertically. Operators and Drivers must work as a team during stacking activities. The Driver is responsible for ensuring the load is stable prior to movement and for properly stacking the pallet. The Operator must assist the Operator in positioning the pallet to ensure the pallets are not pushed together such that the drums become interlocked with the drums on an adjacent pallet. It is important to align the drums vertically to have a stable stack. Because 85-gallon drums will overhang the edge of the pallet, caution must be observed to prevent interlocking and to ensure the stack is aligned vertically.

6.8.4 Only enclosed cab forklifts with an extended backrest may be used to stack pallets four-high.

6.9 For the storage of drums, ensure that the drums are positioned on a pallet so that the container labels will face a storage area inspection aisle.

7.0 HEALTH AND SAFETY REQUIREMENTS

7.1 Safety glasses shall be worn in the Process Area unless other eye/face protection is required by the work permit, S&H, or posted signs.

7.2 Personal protective equipment specified by the work permits shall be worn when required.

7.0 **HEALTH AND SAFETY REQUIREMENTS** (cont.)

7.3 Leather-palm gloves shall be worn when handling drums, operating equipment and when handling rough or sharp-edged material.

7.4 Any spill of LLRW or NM outside of its container shall be reported to the Supervisor immediately.

7.5 A HEPA-type filter vacuum cleaner or a vacuum system with a current DOP test label properly affixed to the vacuum shall be used.

7.6 Communication devices and emergency response equipment shall be available to personnel performing tasks per this procedure.

7.7 Personnel shall have reviewed and be familiar with MSDS's for hazardous chemical/materials that may be used or encountered.

7.8 Any circumstance which could have resulted in an intake of radioactive materials by inhalation, ingestion or absorption shall immediately be reported to a Supervisor. The Supervisor shall immediately report the circumstance of possible radioactive materials intake to S&H Radiological Control Department for evaluation. When the suspect isotope is uranium, the involved personnel shall report to the Urine Sampling Station at the end of their shift to complete an Incident Investigation Report (IIR) (Form No. FS-F-1458), and submit an incident urine sample. The involved personnel shall also report to the Urine Sampling Station at the start of their next shift to submit a follow up urine sample. When the suspect isotope is other than uranium, the involved personnel shall report to the Dosimetry Section of the Radiological Control Department for further determination of actions. Employees are responsible for complying with additional requirements as specified by the Radiological Control Section.

7.9 Any situation which could have resulted in the inhalation, ingestion, or absorption of a hazardous material shall immediately be reported to a Supervisor or to the Assistant Emergency Duty Officer (AEDO), who will immediately report the circumstances to Medical and Industrial Hygiene. The involved personnel shall be directed by the Supervisor or AEDO as to when and where to report for medical evaluation, completion of an Incident Investigation Report (IIR) (Form No. FS-F-1458), and submitting bioassay samples (e.g. blood, urine). Employees are responsible for complying with any additional requirements as specified by S&H.

7.10 All personnel performing duties covered by this procedure shall adhere to all sign postings and requirements including but not limited to RWP's.

8.0 **PROCEDURE**

8.1 Receipt of LLRW and NM at Designated Storage Areas

8.1.1 Inspect the received container(s) per the "Radioactive Material Container Pre-storage Checklist", Form FMPC-REST-3183, (Attachment A).

6989

8.0 **PROCEDURE** (cont.)

8.1 Receipt of LLRW and NM at Designated Storage Areas (cont.)

8.1.2 Perform the following:

A. Inspect the containers.

B. Complete the checklist items.

C. Ensure the completion of any necessary corrective actions.

D. Sign the "Radioactive Material Container Pre-Storage Checklist".

8.1.3 Fill out a "Permanent Inventory Record", Form FS-F-367 (Figure 1) for designated containers if requested to do so by the MC&A representative.

8.1.4 Return the completed "Permanent Inventory Record" form to the MC&A representative.

NOTE 1: The Supervisor shall sign the "NM Transfer Record/NM Receipt Record/Material Identification Record", Forms FS-F-1990, -2220, -2221, (68/69 card), (Figure 2) when the Supervisor is satisfied that the receipt inspection and any required corrective actions are complete.

NOTE 2: The Supervisor may discard the "Radioactive Material Container Pre-storage Checklist".

8.1.5 Give the completed "Radioactive Material Container Pre-Storage Checklist", to the Supervisor.

8.2 Storage of LLRW and NM

8.2.1 Move containers of LLRW or NM to storage locations as directed by the following instructions.

A. Move the pallets/drums to storage locations designated by Waste Operations Support and as directed by the Supervisor.

NOTE 1: Drivers shall move containers of LLRW or NM as directed by procedure 20-C-111, "Transport of Low Level Radioactive Waste (LLRW) and Nuclear Material (NM)".

NOTE 2: The Supervisor shall verify storage locations by reviewing the applicable Task Order or contacting Waste Operations Support.

B. Ensure that the movement/storage requirements stated in Section 6 of this procedure are complied with during this activity.

C. When storage of the received material is completed, get the "Waste Material Movement" Form, FS-F-1090-2 (Figure 3), from the MC&A representative and fill in the New Location section for the containers.

8.0 **PROCEDURE** (cont.)

8.2 Storage of LLRW and NM (cont.)

D. Fill in the new location for the containers placed into storage if the containers are being relocated from another location in the same storage area and are listed on a "Waste Material Movement" Form, FS-F-1090-2, (Figure 3).

E. Add the list of containers to a form and include the locations for the containers placed into storage if the containers are not coming from within the same storage area and are not listed on a "Waste Material Movement" Form.

F. Give the completed "Waste Material Movement" Form to the MC&A representative.

8.2.2 Rearrange storage locations of containers within a storage area per the following instructions if required.

A. Locate the containers and assist the driver in moving them to their designated new locations.

NOTE: Any questions concerning the choice of a storage location shall be directed to the Supervisor. Drivers shall move containers of LLRW or NM as directed by procedure 20-C-111, "Transport of Low Level Radioactive Waste (LLRW) and Nuclear Material (NM)".

B. Ensure that the movement/storage requirements stated in Section 6 of this procedure are complied with during this activity.

C. Fill out a "Waste Material Movement" Form, FS-F-1090-2, (Figure 3) indicating the old and new storage locations for the stored items.

D. Give the completed "Waste Material Movement" Form to the MC&A representative.

8.2.3 Retrieve containers from storage as directed by the following instructions.

A. Obtain a list of containers to be retrieved with their current locations from the Supervisor.

B. Locate the listed containers and assist the driver in moving them to the area designated by the Supervisor.

NOTE: Drivers shall move containers of LLRW as directed by procedure 20-C-111, "Transport of Low Level Radioactive Waste (LLRW) and Nuclear Material (NM)".

C. Ensure that the movement/storage requirements stated in Section 6 of this procedure are complied with during this activity.

8.0 **PROCEDURE** (cont.)

8.2 Storage of LLRW and NM (cont.)

D. Fill out a "Waste Material Movement" Form, FS-F-1090-2 (Figure 3) indicating the old location for the containers being retrieved.

E. If the retrieved containers are to be returned to storage within the same storage area, retain the "Waste Material Movement" Form for completion.

F. If the retrieved containers have a disposition other than storage within the same storage area, give the "Waste Material Movement" Form to the MC&A representative after indicating the old location.

G. If required, return any containers to storage per Section 8.2.1 of this procedure.

PALLET DRUM CAPACITY AND CONTAINER STACKING LIMITS

CONTAINER	DRUM/PALLET	MAXIMUM INDOOR STACKING HEIGHT	MAXIMUM OUTDOOR STACKING HEIGHT
85-Gallon Overpack	3	3 Pallets	3 Pallets
55-Gallon Drum	4	4 Pallets	3 Pallets
30-Gallon Drum	4	4 Pallets	3 Pallets
10-Gallon Pail	9	7 Pallets	3 Pallets
5-Gallon Pail	16	7 Pallets	3 Pallets
110-Gallon Overpack	2	1 Pallet on Top Pallet of Stack	3 Pallets
Whit Metal Boxes	N/A	3 High	3 High

NOTE: Stacking four-high may also consist of any of the following configurations:

- Three pallets of 55-gallon drums with either one pallet of 85-gallon drums or one pallet of 11-gallon drums on top.
- Two pallets of 55-gallon drums with two pallets of 85-gallon drums on top.

PALLET DRUM CAPACITY AND CONTAINER STACKING LIMITS
Table 1

6989

CONTAINER INSPECTION CATEGORIES

TYPE	CHARACTERISTIC	CORRECTIVE ACTION
I	Material flowing from the container with an accumulation on the pallet or pad.	1. Notify the Supervisor. **The Supervisor shall notify the AEDO. The Supervisor shall initiate an Occurrence Report (See SSOP-0067, "Spill Incident Reporting and Cleanup").** 2. Immediately stop or contain the leak. 3. Record on the inspection form that the container requires mitigation within 24 hours. 4. Complete additional cleanup as necessary.
II	Material on the container only; no material on the pallet or pad.	1. Record the leak on the inspection form. 2. Notify the Supervisor. **The Supervisor shall initiate an Occurrence Report and notify the AEDO and the Utilities Engineer, (See SSOP-0067, "Spill Incident Reporting and Cleanup"). The Supervisor shall review the completed inspection forms to prioritize containers for transfer to the overpacking area and subsequent mitigation.**
III	The container exterior is discolored with visible contamination; no material release Severe corrosion with deep pitting and/or metal flaking Holes, dents and/or bulges which affect container to the degree of potential release.	1. Record the condition on the inspection form. 2. Notify Supervisor. 3. The drum requires disposition as directed by the Supervisor.

CONTAINER INSPECTION CATEGORIES
Table 2

6883

PERMANENT INVENTORY RECORD
FS-F-367 (Typical Example)

FEMP
PERMANENT INVENTORY RECORD

DATE:
INVENTORY SHEET NUMBER:
PLANT: 01
AREA:
NUCLEAR MATERIAL:

LINE NO.	BADGE NUMBER (1-4)	INVENTORY NUMBER	LOT NUMBER: P. O. NUMBER (26-29)	SOURCE (24-25)	CLASS (27)	MATERIAL (24-30)	SEQUENCE (31-34)	DRUM NO.	GROSS WEIGHT POUNDS	TARE WEIGHT POUNDS (11-20)	NET WEIGHT POUNDS (11-20)	MBA (40-47)	LOCATION: BDVL.	STACK	LEVEL	DRUM SIZE (48-51)	(✓) YES	OP	POOS
1																			
2																			
3																			
4																			
5																			
6																			
7																			
8																			
9																			
10																			
11																			
12																			
13																			
14																			
15																			
16																			
17																			
18																			
19																			
20																			

PERMANENT INVENTORY RECORD
FS-F-367 (Typical Example)
Figure 1

6989

NM TRANSFER RECORD/NM RECEIPT RECORD/MATERIAL IDENTIFICATION RECORD
(68/69 CARD) (Typical Example)
FS-F-1990, -2220, -2221

NUCLEAR MATERIAL TRANSFER RECORD

CARD PL. NO. 68

NEGATIVE	DATE TRANSFERRED MO.	DAY	YEAR	SHIFT	TRANS. BY BADGE NO

NOTE: Green card is for receiver information ONLY and may be retained in file. DO NOT FORWARD to Data Processing. DO NOT LEAVE with the material.

P.O. NO.: | SOURCE:
MATERIAL CLASS | MATERIAL TYPE
LOT SEQUENCE NO.:
MATERIAL DESCRIPTION
SHAPE CODE:

MBA (FROM) | PLANT:
MBA (TO) | PLANT
STORAGE LOCATION

NO. OF CONTAINERS OR ITEMS
NUMBER | DESCRIPTION
GROSS WEIGHT:
TARE WEIGHT

SIGNATURES:
FS-F-1990 (REV. 3/8/92) (SHIPPER) (TRANSPORTATION) (RECEIVER)

NUCLEAR MATERIAL RECEIPT RECORD

CARD PL. NO. 69

NOTE: Green card is for receiver information ONLY and may be retained in file. DO NOT FORWARD to Data Processing. DO NOT LEAVE with the material.

NEGATIVE	DATE TRANSFERRED MO.	DAY	YEAR	SHIFT	TRANS. BY BADGE NO.

P.O. NO.: | SOURCE:
MATERIAL CLASS | MATERIAL TYPE
LOT SEQUENCE NO.
MATERIAL DESCRIPTION
SHAPE CODE:

MBA (FROM) | PLANT:
MBA (TO) | PLANT
STORAGE LOCATION

NO. OF CONTAINERS OR ITEMS
NUMBER | DESCRIPTION
GROSS WEIGHT:
TARE WEIGHT

SIGNATURES:
FS-F-2220 (REV. 3/8/92) (SHIPPER) (TRANSPORTATION) (RECEIVER)

MATERIAL IDENTIFICATION RECORD

CARD PL. NO. " " XX

NOTE: Green card is for receiver information ONLY and may be retained in file. DO NOT FORWARD to Data Processing. DO NOT LEAVE with the material.

NEGATIVE	DATE TRANSFERRED MO.	DAY	YEAR	SHIFT	TRANS. BY BADGE NO.

P.O. NO.: | SOURCE:
MATERIAL CLASS | MATERIAL TYPE
LOT SEQUENCE NO.
MATERIAL DESCRIPTION
SHAPE CODE:

MBA (FROM) | PLANT
MBA (TO) | PLANT
STORAGE LOCATION

NO. OF CONTAINERS OR ITEMS
NUMBER | DESCRIPTION
GROSS WEIGHT
TARE WEIGHT

SIGNATURES:
FS-F-2221 (REV. 3/8/92) (SHIPPER) (TRANSPORTATION) (RECEIVER)

NM TRANSFER RECORD/NM RECEIPT RECORD/MATERIAL IDENTIFICATION RECORD
(68/69 CARD) (Typical Example)
FS-F-1990, -2220, -2221
Figure 2

2866

WASTE MATERIAL MOVEMENT
FS-F-1090-2 (Typical Example)

Fernald Site
Contracts & Acquisitions
WASTE MATERIAL MOVEMENT RECORD

DATE	INVENTORY NUMBER	OLD LOCATION					NEW LOCATION					GROSS WEIGHT	TARE WEIGHT	NET WEIGHT	MBA		REMARKS	OP M	RP M
		L	A	R	S	L	L	A	R	S	L				OLD	NEW			

FS F 1090 2 (REV 02/18/94)

FS-F-1090-2 (Typical Example)
Figure 3

RADIOACTIVE MATERIAL CONTAINER PRE-STORAGE CHECKLIST
FMPC-REST-3183 (Typical Example)

Number of Container_____ Date Received_____

ITEM No.	INSPECTION	ACCEPTABLE YES/NO	CORRECTIVE ACTION	DATE CORRECTED
1	Container(s) free of spilled/leaked material.		1. Notify Supervisor. 2. Contain the spill/leak per 20-C-606. The Supervisor shall take action per Table 2 of this procedure. Problem Container(s) Inventory No._____	
2	Container(s) free of dents and/or bulges.		1. Notify Supervisor. The Supervisor shall direct the appropriate actions as specified in Table 2 of this procedure. Problem Container(s) Inventory No._____	
3	Container(s) free of corrosion.		1. Notify Supervisor. The Supervisor shall direct the appropriate actions as specified in Table 2 of this procedure. Problem Container(s) Inventory No._____	
4	Container bolt ring secure with bolt lugs pointing downward and no more than 6 inches from the seam of the drum.		Secure per the instruction in procedure 20-C-600, "Overpacking Defective Containers". Problem Container(s) Inventory No._____	

0800

RADIOACTIVE MATERIAL CONTAINER PRE-STORAGE CHECKLIST
FMPC-REST-3183 (Typical Example)

ITEM No.	INSPECTION	ACCEPTABLE YES/NO	CORRECTIVE ACTION	DATE CORRECTED
5	Hazardous Material Warning label affixed and coated with polyurethane.		1. Notify Supervisor. 2. Affix label and/or coat with polyurethane as instructed by the Supervisor. Problem Container(s) Inventory No._____	
6	Vented containers stenciled with word "VENT".		1. Notify Supervisor. 2. Stencil per procedure 01-C-910, "Venting Potentially Explosive Drums". Problem Container(s) Inventory No._____	
7	Other labels affixed to container(s) as applicable.		1. Notify Supervisor. 2. Affix labels as applicable. Problem Container(s) Inventory No._____	
8	Container(s) properly color coded/marked.		1. Notify Supervisor. 2. Color code.mark per RM-0005, "FEMP Lot Marking and Color Coding System". Problem Container(s) Inventory No._____	

Comments:_____

_____ _____

HAZWAT Signature Badge No.

RADIOACTIVE MATERIAL CONTAINER PRE-STORAGE CHECKLIST
FMPC-REST-3183 (Typical Example)
Attachment A (Sheet 2 of 2)

6989

RECORD OF REVISION

DATE	REV. NO.	DESCRIPTION AND AUTHORITY
02-06-95	0	Procedure for handling LLRW and NM required per Request P94-0486, initiated by K. Belgrave. This procedure Supersedes 01-C-608.

NON-CONTROLLED COPY

1.0 PURPOSE

The purpose of this document is to provide the procedure for the on-site movement and storage of uranium with an enrichment of less than 20 percent U235 and thorium.

2.0 APPLICABILITY

This procedure is applicable to areas where uranium <20 percent enrichment and thorium materials are received, stored, and/or handled.

3.0 RESPONSIBILITIES

3.1 **Supervisors** shall be responsible for the following:

3.1.1 Ensuring that personnel are qualified per the established training requirements identified by the Department Manager.

3.1.2 Obtaining Nuclear Criticality Safety approval per SSOP-0095 before beginning an activity involving enriched restricted material.

3.1.3 Ensuring that personnel adhere to nuclear criticality safety limits and restriction specified by the Criticality Safety Approval document.

3.1.4 Ensuring that nuclear criticality safety limits and restrictions are posted in their area of responsibility.

3.1.5 Obtaining and posting a "Radiological Work Permit" (RWP) when necessary.

3.1.6 Contacting Environmental Safety and Health (ES&H) to determine the required protective equipment, including respirators, for the area where the material is being moved and/or delivered.

3.1.7 Issuing the required protective equipment to operators.

3.1.8 Reviewing applicable Material Safety Data Sheets (MSDSs) with operators.

3.1.9 Coordinating with other sections and/or departments to receive and store <20% U235 material and thorium.

3.2 **Materials Control & Accountability (MC&A)** shall be responsible for preparing required documentation.

3.3 **Operators/Drivers** shall be responsible for complying with this procedure.

4.0 DEFINITIONS

4.1 Criticality Safety Analysis - A review (performed before starting a n activity involving fissile materials or before an existing activity o piece of equipment involving fissile materials is changed) to determine whether the remediation process will be subcritical under normal and credible abnormal conditions.

4.2 Fissile Material - Any material containing uranium-U235 or other fissile radionuclides (such as plutonium-239, plutonium-241, and uranium-233).

4.3 Nuclear Safety Operational Authorization (NSOA) - A form used by Nuclear Safety to authorize nuclear criticality safety for a new activity or change in activity scheduled for completion within 90 days.

4.4 Nuclear Criticality - A self-sustaining chain reaction of fissions (the state in which the effective neutron multiplication content of a system of fissile materials equals or exceeds unity).

4.5 Nuclear Criticality Safety (NCS) - The prevention of inadvertent nuclear criticality and protection against injury or damage due to accidental criticality.

4.6 Request for Criticality Safety Approval - A two-part form used to request and approve nuclear criticality safety for a new activity/design or change in activity/design that will not be completed within 90 days.

4.7 Safe Grouping - A can or drum, or a group of cans or drums, containin materials at the same enrichment and having a total mass which is les the safe limit of that enrichment.

5.0 APPLICABLE DOCUMENTS

5.1 Drivers

5.1.1 PO-D-026, "Site Services Document Program"

5.1.2 RM-0012, "Quality Assurance Program Description"

5.2 References

5.2.1 SOP 20-C-904, "General Nuclear Safety Requirements"

5.2.2 SOP 20-C-910, "Venting Potentially Explosive Drums"

5.2.3 SOP 20-C-917, "Hydrogen Monitoring and Removing NUC-FIL Vent Plugs From Drums"

5.2.4 RM-0005, "FEMP Lot Marking and Color Coding System"

5.2.5 SSOP-0095, "Criticality Safety Analysis and Approval Process"

6989

6.0 INDUSTRIAL HEALTH SAFETY REQUIREMENTS

6.1 Safety glasses shall be worn unless additional eye/face protection is specified by ES&H, the supervisor, or posted signs.

6.2 Operators shall wear protective equipment specified by ES&H.

6.3 Spills shall be reported and cleaned up promptly to prevent the spread of contamination.

6.4 Loose residues on skids shall be removed before the skids leave the area.

6.5 Corrosive materials shall be placed in containers constructed of, or lined with, corrosion resistant material.

6.6 Repackaging radioactive material shall be approved by Radiological Safety.

6.7 Floor loading limits shall not be exceeded.

6.8 Skid mounted 30- and/or 55-gallon drums (maximum 4 drums/skid) to be stacked shall not contain more than 1000 material pounds per drum.

6.9 Drums of material shall be stacked to the height specified by ES&H.

6.10 Drums of material in long term storage shall be inspected for leakage and deterioration. For outside storage, the inspection shall be daily. For inside storage, the inspection shall be weekly.

6.11 Leaking or significantly deteriorated drums shall be overpacked.

6.12 Skid-loaded solid metal pieces that are uniformly distributed in plane and within nuclear safety limits shall be stacked to the height specified by ES&H.

6.13 Fire lanes shall be marked (stenciled) and kept clear of obstructions.

6.14 Equipment shall not be parked in fire lanes.

6.15 Vehicle weight limit or the nuclear safety limit, whichever is most restrictive, shall apply to loaded trucks.

6.16 Hoists to be used shall be checked prior to the first use each day.

6.17 Employees shall have read and be familiar with the MSDSs for hazardous chemicals/materials that may be used or encountered.

6.18 Skids of ingots may be stacked three high provided the ingots are uniformly distributed and within nuclear safety limits.

6.19 Containers of pyrophoric materials shall be handled and stored in accordance with nuclear and fire safety requirements specified in 20-C-910 and 20-C-917.

6.20 A fire lane shall be provided between a maximum of five rows of pyrophoric material.

6.0 INDUSTRIAL HEALTH AND SAFETY REQUIREMENTS (cont.)

6.21 Skids of pyrophoric material shall be place in rows in a herringbone pattern.

6.22 Briquettable chips and machining sludges shall be contained in cans or drums not larger than 30-gallon in size.

6.23 Containers of briquettable chips and machining sludges shall not contain more than 2/3 the capacity or a safe mass, whichever is smaller.

6.24 Water/coolant shall not be added to containers of briquettable chips.

6.25 Machining sludges, sawdust, and grinder sludges shall be covered with two inches of water or coolant.

6.26 Uranium bearing sludges covered with water shall be contained in vented drums.

6.27 Drums of sawdust or grinder sludge shall contain a maximum of 75 lbs or a safe mass, whichever is smaller.

6.28 Briquettes shall be packaged in dry, covered, and vented ten-gallon cans and stored inside or under a protective canopy.

6.29 Load limit or nuclear safety limit, whichever is most restrictive, of vehicles shall not be exceeded.

6.30 Containers of pyrophoric material that overheats shall be placed unde overhead water spray, if possible, and cooled and ventilated.

6.31 Drums of uranium metal shall be handled per SOP 20-C-917.

6.32 Fissile materials shall be stored in Nuclear Criticality Safety approved storage areas. NCS approval shall be documented on a Nuclear Safety Operation Authorization (NSOA) Form or in a Criticality Safety Analysis (CSA).

6.33 Repackaging activities involving enriched restricted materials shall be approved by Nuclear Safety.

6.34 Any situation which could have resulted in the inhalation, ingestion, or absorption of a hazardous material shall immediately be reported to a Supervisor or to the Assistant Emergency Duty Officer (AEDO), who will immediately report the circumstances to Medical and Industrial Hygiene. The involved personnel shall be directed by the Supervisor or AEDO as to when and where to report for medical evaluation, completion of an Incident Investigation Report (IIR) (Form No. FS-F-1458), and submitting bioassay samples (e.g. blood, urine). Employees are responsible for complying with any additional requirements as specified by ES&H.

6.0 INDUSTRIAL HEALTH AND SAFETY REQUIREMENTS (cont.)

6.35 Any circumstance which could have resulted in an intake of radioactive materials by inhalation, ingestion, or absorption shall immediately be reported to a Supervisor. The Supervisor shall immediately report the circumstance of possible radioactive materials intake to ES&H Radiological Control Department for evaluation. When the suspect isotope is uranium, the involved personnel shall report to the Urine Sampling Station at the end of their shift to complete an Incident Investigation Report (IIR) (Form No. FS-F-1458), and submit an incident urine sample. The involved personnel shall also report to the Urine Sampling Station at the start of their next shift to submit a follow up urine sample. When the suspect isotope is other than uranium, the involved personnel shall report to the Dosimetry Section of the Radiological Control Department for further determination of actions. Employees are responsible for complying with additional requirements as specified by the Radiological Control Section.

7.0 GENERAL

7.1 Warnings, Cautions, and Notes precede the Subsection or Step to which they apply.

8.0 PROCEDURE

8.1 Repackaging Materials

8.1.1 Identify and color code receiving containers per RM-0005.

8.1.2 Check that an "RWP" is posted.

8.1.2.1 If not, notify the supervisor.

NOTE: The supervisor shall prepare and submit, to Nuclear Criticality Safety, a "Nuclear Safety Operational Authorization Request" Form or a "Criticality Safety Analysis Request" Form, as applicable.

8.1.3 If the material is enriched restricted, notify the supervisor and proceed as instructed.

WARNING

The material shall be in safe configuration at all times.

NOTE: Material in a special container may be limited by mass, slab, cylinder diameter, or volume. Material removed from the container shall, if required, be handled per the limits for the enrichment.

8.1.4 Transfer the material from the container (particularly from a special container such as a birdcage) to a can, drum, skid, or box per the instructions of Nuclear Safety (specified by the NSOA or CSA).

6989

8.0 **PROCEDURE** (cont.)

8.2 Transferring Enriched Materials On-Site

NOTE: The supervisor shall contact the supervisor receiving the material, obtain approval, and verify that receiver has adequate procedural coverage to accept material.

8.2.1 Inform the supervisor that material is ready for on-site movement.

8.2.2 If material is mass or geometry restricted, proceed as follows:

8.2.2.1 Fill out a "Nuclear Safety Operational Authorization," (NSOA) request, Form FS-F-1354 (See Figure 2) per SSOP-0095.

NOTE: The supervisor shall contact Nuclear Criticality Safety for approval of the NSOA.

8.2.2.2 Give the NSOA to the supervisor.

NOTE: The packet shall be completed for all transfers of uranium regardless of enrichment, except for Transportation and Receiver signatures.

8.2.3 Check that a "Nuclear Material Transfer/Receipt/Identification Record" card packet (68, 69, XX cards), Forms FS-F-1990-2220-2221 (See Figure 3) have been prepared for the transfer.

8.2.3.1 If not, notify the supervisor.

8.2.4 Check the material to ensure the following:
(A) was weighed on an NMC scale
(B) was sampled and analysis forms completed, if necessary
(C) meets industrial safety requirements
(D) is color coded and identified per RM-0005

NOTE: The supervisor shall inform personnel loading or storing material of the color coding, nuclear safety, and vehicle gross load limitations.

8.2.5 Contact the supervisor to obtain the material type code, enrichment, nuclear safety limits, and load limits (Refer to RM-0005, SOP 20-C-904, and Tables 1 thru 10).

8.2.6 After the material has been loaded, check that the container count is correct and that the load is within the weight/spacing limits specified by Table 10.

8.2.6.1 If the container count is wrong or weight/spacing limits are exceeded, notify the supervisor.

8.0 **PROCEDURE** (cont.)

8.2.7 Check the card packet to ensure that the description of the material includes a lot number and is accurate.

8.2.7.1 If the description is in error or there is no lot number, notify the supervisor.

8.2.8 Check that the correct destination has been entered in the packet.

8.2.8.1 If there is no destination or the destination is in error, notify the supervisor.

NOTE 1: The supervisor and MC&A shall sign the EDP card packet as the shipper.

NOTE 2: The supervisor shall notify Transportation that material is ready for transfer.

NOTE 3: Transportation shall schedule the time of actual movement.

NOTE 4: Material integrity, identification, and nuclear safety configuration shall be maintained until transfer.

8.2.9 Give the cards and other forms to the supervisor.

NOTE 1: After being contacted by the shipper and/or receipt of the approved NSOA form, if required (depending on the percent enrichment), the Transportation Supervisor shall schedule the time for shipment and notify the shipper and receiver.

NOTE 2: If a shipment of uranium material is to be delayed or cancelled, the Transportation Supervisor shall inform the shipper, receiver, MC&A, Nuclear Criticality Safety and of the delay and, if appropriate, of the re-scheduled time.

8.3 Moving Enriched Uranium Materials On-Site

8.3.1 Upon receiving documentation from the Transportation Supervisor, proceed to the location of the material.

8.3.2 Check the container count, material identification, and trailer number (if material is loaded on a trailer) to ensure that the transfer matches the information on the documentation (NSOA form and/or 68/69 card packet).

NOTE: The supervisor shall coordinate with MC&A for resolution of differences and correction of shipment or documentation.

8.3.2.1 Return, to the supervisor transferring the material, documentation that does not match the shipment.

8.3.2.2 Notify the Transportation Supervisor of the situation and proceed as directed.

8.0 **PROCEDURE** (cont.)

8.3.3 If the shipment and transfer records match, sign the 68/69 card pa in the space designated "Transportation."

NOTE: The supervisor shall enter the transferring plant's number on the Transfer Record and give the card to the MC&A representative.

8.3.4 Give the "Nuclear Material Transfer Record" (top card of the 68/69 card packet) to the supervisor.

NOTE: Material shall be moved to the receiving location with care to ensure the load configuration of enriched materials is maintained for nuclear safety.

8.3.5 Move the material to the specified receiving location.

NOTE: Transportation shall deliver the NSOA form and the -69 and -XX cards to the receiver.

8.3.6 Give the transfer documentation to the supervisor of the receiving area.

8.4 Receiving Enriched Uranium Materials From On-Site Locations

8.4.1 Using the NSOA form (if used) and/or the -69 and -XX cards, check that the material is acceptable and is in accordance with the information on the documents.

8.4.2 If the material is not acceptable or not as described by documentati..., proceed as follows:

8.4.2.1 Make a notation on the Receipt Record card to indicate why the shipment is unacceptable.

8.4.2.2 Request Transportation to return the shipment.

8.4.2.3 Send the -69 card bearing the notation and the -XX cards to the shipper

8.4.2.4 Notify the supervisor of the situation.

NOTE: The supervisor shall sign the card and then give the card to the MC&A representative.

8.4.3 If the material is acceptable, give the -69 card and -XX card to the supervisor.

8.4.5 Unload the material.

8.0 **PROCEDURE** (cont.)

6989

8.5 Storage Enriched Material

8.5.1 Using the appropriate lifting/moving equipment, move the material to the storage area that is authorized for the type and enrichment.

8.5.2 Place the material in storage per Section 9.0.

9.0 **STORAGE REQUIREMENTS**

9.1 Uranium material shall be stored per the limits of Tables 1 thru 10 and/or SOP 20-C-904 (unless otherwise noted on the NSOA or CSA form).

9.2 Uranium metal pieces greater than one inch in their smallest dimensions, free of uranium compounds, non-porous, and free of long, narrow protrusions and cups may be stored in amounts up to the maximum weights shown in Table 2 or in horizontal slabs to maximum thicknesses shown in Table 3.

9.2.1 Pieces not meeting the limits of Table 2 or 3 shall be stored under the limits in Table 1.

9.3 The smallest dimension for hollow, cylindrical pieces $\leq$0.95% U235 is the combined wall thickness (OD+ID).

9.3.1 For higher enrichments the smallest dimension is the outside diameter less the inside diameter (OD-ID).

9.4 Uranium compounds shall be stored according to the maximum limits listed in Table 4.

9.4.1 Materials of higher U densities and/or with higher free metal content shall be stored according to limits in Table 1.

9.5 Rockwell spills (MDC 070) of 2.1% U235 enriched material shall be stored in an area free of water.

9.6 When metal spills (MDC 104) at the 1.25% U235 level do not meet the 805 lb limit (Refer to Table 2) or the 8 inch limit (Refer to Table 3), a maximum charge of 2150 lbs may be stored as a unit until the charge can be cut for disposal.

9.7 Chips, turnings, and briquettes (MDCs 107, 111, 112, 252, and 302) shall be stored per Table 7 and the following requirements.

9.7.1 Drums/cans may be stored side-by-side.

9.7.2 Skids of containers may be stored edge-to-edge in a maximum of five parallel rows.

9.7.3 Skids/drums/cans shall not be stacked.

9.7.4 Each group of five rows of skids shall be separated by a fire lane.

0808

9.0 STORAGE REQUIREMENTS (cont.)

9.8 Piped and porous ingots (MDCs 120, 240, 241, 242, 244 400, 404, and 4 0.86 and 0.95 percent U235 enrichment shall be stored under the most restrictive limits of Table 2 or 3.

9.8.1 Ingots of 1.25 and 2.1 percent U235 enrichment shall be stored as 1/group.

9.9 Derbies (MDCs 129, 220, and 254) graded as code 4 or 5 shall be stored under the most restrictive requirements of Table 2 or 3.

9.10 Duds (MDC 308) of 0.86 and 0.95 percent U235 enrichment with voids or projections shall stored under the most restrictive limits of Table 2 or 3.

9.10.1 Duds of 1.25 and 2.1 percent enrichment shall be stored as 1/group.

9.11 Boxed and banded extrusions (MDC 453) may be stored 3 boxes high.

9.12 Wet sump/filter cake (MDC 067) may be stored as unlimited at ≤1.25 percent U.

9.12.1 The limits of Table 5 apply to other enrichments.

9.13 UNH solutions (MDCs 150 and 204) <2.00 percent U235 enrichment may be stored as unlimited.

9.13.1 UNH at 2.1 percent U235 enrichment shall be limited to 238 U g/l.

9.14 UNH solids (MDC 207) <2.00 percent U235 enrichment may be stored as unlimited.

9.14.1 The limit shall be 215 lbs for 2.1 percent U235 enrichments.

9.15 UO3 products (MDCs 072 and 200) that are ≤1.25 percent U235 enrichment shall be stored in drums containing 2000 lbs maximum.

9.16 UF4 (MDC 210) between 1.25 and 20 percent U235 enrichment shall be contained in 10-gallon cans (225 lb/can maximum of 170 lb U).

9.16.1 The cans may be stored edge-to-edge in a single plane in unlimited array (mass/unit area control).

9.17 UO3 and UF4 products that are 2.00 percent U235 enrichment may be stored in 30-gallon drums on skids with a maximum of two drums per skid.

9.17.1 There shall be at least 20 inches separating the drums on the skid and 24 inches separation from drums on adjacent skids.

9.18 Pots of UF4 (MDC 216) that are 2.0 or 2.1 percent U235 enrichment shall be stored one pot/group.

6989

10.0 **APPLICABLE FORMS**

10.1 FMPC-ADM-613, "Nuclear Materials Receiving Report"

10.2 FS-F-1354, "Nuclear Safety Operational Authorization"

10.3 FS-F-1990-2220-2221, "Nuclear Material Transfer/Receipt/Identification Record"

e8e9

TABLE 1
SAFE LIMITS FOR CATEGORY 1 MATERIALS[1]

Enrichment (% 235U)	Mass (U lb Max)	Max. Slab Thickness (Inches)	Max. Cyl. Diameter (Inches)	Maximum Volume		Max Mass/ Unit Area (lb/ft^2)
				(Ft^3)	(Gal)	
0.86	5100	20.06	27	26	194	510
0.95	2700	12.5	22	14	105	320
1.0	2260	11.5	20	11	82	270
1.1	1430	10.0	17	6.6	49	210
1.2	950	8.75	16	4.6	34	170
1.25	805	8.0	15	4.0	29	155
1.3	680	7.75	14	3.5	26	140
1.4	500	7.0	13	2.8	21	120
1.5	400	6.5	12	2.4	18	105
1.6	310	6.0	12	2.1	16	92
1.7	260	5.75	11	1.8	13	83
1.8	220	5.5	10	1.6	12	75
1.9	190	5.25	10	1.5	11	68
1.95	182	5.0	9.8	1.4	11	65
2.0	170	5.0	9.7	1.4	10	64
2.1	152	4.75	9.4	1.3	9.6	58
2.5	100	4.25	8.7	1.0	7.6	44
3.0	73	3.75	8.1	0.80	6.0	33
3.5	58	3.5	7.7	0.68	5.1	26
4.0	45	3.5	7.3	0.60	4.5	22
4.5	40	3.25	7.1	0.55	4.2	18
5.0	34	3.25	7.0	0.51	3.8	17

(1) If the minimum piece size (or density or concentration or free metal content) of a material is known, less restrictive limits from another table may be used.

6989

TABLE 2
SAFE MASS LIMITS (U/LB) FOR CATEGORY 2 MATERIALS[1]

235U (%)	Size (U Lbs)	SMALLEST DIMENSION OF PIECE (INCHES)														
		≥1	≥1.5	≥2	≥2.5	≥3	≥3.5	≥4	≥5	≥6	≥7	≥8	≥9	≥10	≥11	≥12
0.86	5100			∞	∞	∞	∞	∞	∞	∞	∞	∞	∞	∞	∞	∞
0.95	2700	3050	5200	12800	41500	200000	∞	∞	∞	∞	∞	∞	∞	∞	∞	∞
1.0	2260	2360	3390	5400	11700	40000	∞	∞	∞	∞	∞	∞	∞	∞	∞	∞
1.1	1430	1600	2200	3400	5300	9100	16000	24000	∞	∞	∞	∞	∞	∞	∞	∞
1.2	950	1200	1600	2500	3650	5260	7300	9560	14300	17400	43500	∞	∞	∞	∞	∞
1.25	805	1040	1470	2250	3300	4350	5870	7450	10400	12200	14300	18200	∞	∞	∞	∞
1.3	680	910	1300	2000	2800	3870	4900	6080	8260	10000	11300	13000	14300	∞	∞	∞
1.4	500	730	1080	1600	2260	3000	3800	4650	6080	7390	8700	9780	10800	11700	12400	14300
1.5	400	600	930	1390	1900	2500	3130	3740	4870	6000	6950	7950	8870	9900	10600	11100
1.6	310	520	800	1190	1630	2100	2600	3130	4060	4950	5870	6740	7430	8430	9130	9560
1.7	260	440	700	1040	1400	1800	2260	2700	3470	4260	5040	5740	6520	7400	8000	8600
1.8	220	400	630	930	1260	1600	2000	2340	3040	3740	4390	5130	5700	6520	7130	7650
1.9	190	360	565	830	1130	1430	1780	2080	2700	3300	3950	4520	5130	5780	6430	6900
1.95	182	340	540	790	1070	1350	1670	1990	2600	3170	3740	4345	4870	5565	6174	6565
2.0	170	330	525	760	1020	1300	1600	1870	2450	3020	3600	4170	4750	5320	5900	6470
2.1	152	300	480	695	935	1180	1450	1720	2240	2760	3260	3780	4300	4820	5300	5780
2.5	100	230	360	520	690	870	1070	1270	1650	2040	2430	2820	3200	3630	4040	4780
3.0	73	180	285	410	540	675	830	1000	1300	1600	1900	2200	2520	2850	3150	3470
3.5	58	155	245	350	460	570	700	850	1100	1390	1640	1900	2170	2400	2650	2950
4.0	45	140	225	320	420	510	635	650	980	1220	1450	1670	1900	2130	2340	2600
4.5	40	135	210	300	390	475	585	700	900	1120	1300	1520	1740	1920	2130	2340
5.0	34	130	200	285	375	455	560	655	850	1040	1230	1420	1600	1800	2000	2180

(1) Values may be applied to hollow metal pieces >0.96% ^{235}U by using the wall thickness (OD-ID/2) as the "smallest dimension."

000548

TABLE 3
SAFE SLAB LIMITS (INCHES) FOR CATEGORY 2 MATERIALS[1]
TABLE 4
SAFE LIMITS FOR CATEGORY 3 MATERIALS

Enrichment (%235U)	Mass (U lb Max)	Max Slab Thickness (Inches)	Max Cyl. Diameter (Inches)	Maximum Volume	
				(Ft^3)	(Gal)
≤0.98	∞	∞	∞	∞	∞
1.0	9000	24.0	39.3	88.0	658
1.1	4960	17.75	28.8	50.0	374
1.2	2700	14.5	24.5	30.0	224
1.25	2000	13.75	23.2	24.0	179
1.3	1550	13.25	22.4	19.0	142
1.4	1000	12.0	20.8	12.5	93
1.5	744	11.25	19.7	9.3	69
1.6	560	10.25	18.9	7.1	53
1.7	420	9.75	18.0	5.9	44
1.8	357	9.5	17.4	5.0	37
1.9	295	9.0	16.8	4.4	33
1.95	271	8.75	16.3	4.1	30
2.0	252	8.75	16.5	3.9	30
2.1	215	8.4	15.7	3.4	26
2.5	132	7.5	14.2	2.4	18
3.0	91	6.75	12.9	1.8	13
3.5	67	6.0	12.1	1.4	10
3.6	64	5.5	11.5	1.2	9
3.7	60	5.5	11.5	1.2	9
3.8	58	5.5	11.5	1.2	9
3.9	55	5.5	11.5	1.2	9
4.0	52	5.5	11.5	1.2	9
4.1	50	5.25	10.9	1.1	7.9
4.2	48	5.25	10.9	1.1	7.9
4.3	46	5.25	10.9	1.1	7.9
4.4	44	5.25	10.9	1.1	7.9
4.5	43	5.25	10.9	1.1	7.9
4.6	41	5.0	10.4	0.95	7.1
4.7	40	5.0	10.4	0.95	7.1
4.8	38	5.0	10.4	0.95	7.1
4.9	37	5.0	10.4	0.95	7.1
5.0	36	5.0	10.4	0.95	7.1

TABLE 4
SAFE LIMITS FOR CATEGORY 3 MATERIALS

Enrichment (%235U)	Mass (U lb Max)	Max Slab Thickness (Inches)	Max Cyl. Diameter (Inches)	Maximum Volume	
				(Ft^3)	(Gal)
≤0.98	∞	∞	∞	∞	∞
1.0	9000	24.0	39.3	88.0	658
1.1	4960	17.75	28.8	50.0	374
1.2	2700	14.5	24.5	30.0	224
1.25	2000	13.75	23.2	24.0	179
1.3	1550	13.25	22.4	19.0	142
1.4	1000	12.0	20.8	12.5	93
1.5	744	11.25	19.7	9.3	69
1.6	560	10.25	18.9	7.1	53
1.7	420	9.75	18.0	5.9	44
1.8	357	9.5	17.4	5.0	37
1.9	295	9.0	16.8	4.4	33
1.95	271	8.75	16.3	4.1	30
2.0	252	8.75	16.5	3.9	30
2.1	215	8.4	15.7	3.4	26
2.5	132	7.5	14.2	2.4	18
3.0	91	6.75	12.9	1.8	13
3.5	67	6.0	12.1	1.4	10
3.6	64	5.5	11.5	1.2	9
3.7	60	5.5	11.5	1.2	9
3.8	58	5.5	11.5	1.2	9
3.9	55	5.5	11.5	1.2	9
4.0	52	5.5	11.5	1.2	9
4.1	50	5.25	10.9	1.1	7.9
4.2	48	5.25	10.9	1.1	7.9
4.3	46	5.25	10.9	1.1	7.9
4.4	44	5.25	10.9	1.1	7.9
4.5	43	5.25	10.9	1.1	7.9
4.6	41	5.0	10.4	0.95	7.1
4.7	40	5.0	10.4	0.95	7.1
4.8	38	5.0	10.4	0.95	7.1
4.9	37	5.0	10.4	0.95	7.1
5.0	36	5.0	10.4	0.95	7.1

TABLE 5
SAFE LIMITS FOR CATEGORY 4 MATERIALS

% 235U [1]	Density ($lb\ U/ft^3$)	Concentration [1]	
		(U g/L)	(U lb/gal)
1.0	31.2	500	4.2
1.1	28.3	454	3.8
1.2	26.0	416	3.5
1.25	25.0	400	3.3
1.3	24.0	383	3.2
1.4	22.2	357	3.0
1.5	20.8	333	2.8
1.6	19.5	312	2.6
1.7	18.3	294	2.4
1.8	17.3	277	2.3
1.9	16.4	263	2.2
1.95	16.0	256	2.1
2.0	15.6	250	2.1
2.1	14.8	238	2.0
2.5	12.4	200	1.7
3.0	10.4	166	1.4
3.5	8.92	142	1.2
4.0	7.80	125	1.0
4.5	6.93	111	0.93
5.0	6.24	100	0.83
5.5	5.68	91	0.83
6.0	5.20	83	0.69
6.5	4.80	77	0.64
7.0	4.46	71	0.60
7.5	4.16	67	0.56
8.0	3.90	63	0.52
8.5	3.67	59	0.49
9.0	3.47	56	0.46
9.5	3.29	53	0.44
10.0	3.12	50	0.42

[1] Materials having a 235_U concentration ≤ 5.0 g $235_U/l$ (0.312 lb/ft^3), including discard residues, may be handled in unlimited quantities.

TABLE 6
SAFE LIMITS FOR CATEGORY 5 MATERIALS

Enrichment[1] (% 235U)	Mass (lb U)	Slab Thickness (Inches)	Cylinder Diameter (Inches)	Volume	
				Ft^3	Gal
5.0	36.0	5.0	10.4	0.95	7.1
5.5	31.0	4.5	9.6	0.72	5.4
6.0	27.0	4.5	9.6	0.72	5.4
6.5	24.0	3.9	8.7	0.56	4.2
7.0	22.0	3.9	8.7	0.56	4.2
7.5	19.0	3.9	8.7	0.56	4.2
8.0	18.0	3.9	8.7	0.56	4.2
8.5	16.0	3.6	8.2	0.49	3.7
9.0	15.0	3.6	8.2	0.49	3.7
9.5	14.0	3.6	8.2	0.49	3.7
10.0	13.0	3.6	8.2	0.49	3.7
11.0	10.5	3.4	7.9	0.41	2.9
12.0	8.7	3.4	7.9	0.41	2.9
13.0	7.0	3.0	7.5	0.41	2.9
14.0	6.2	3.0	7.5	0.41	2.9
15.0	5.2	3.0	7.5	0.41	2.9
16.0	4.6	2.8	7.1	0.34	2.5
17.0	4.1	2.8	7.1	0.34	2.5
18.0	3.4	2.8	7.1	0.34	2.5
19.0	3.3	2.6	6.8	0.34	2.5
<20.0	3.0	2.6	6.8	0.34	2.5

[1] The "always safe" limits for enrichments >5.0% but <20.0% 235_U and are applicable to compounds and aqueous solutions.

TABLE 7
STORAGE LIMITS FOR CHIPS, TURNINGS, AND BRIQUETTES

Percent 235U	Chips & Turnings	Briquettes
0.95	550 U lbs/30-gal drum	342 U lbs/10-gal can
1.25	270 U lbs/30-gal drum	166 U lbs/10-gal can
2.1	100 U lbs/30-gal drum	- - - - - - - - -

TABLE 8
NUCLEAR SAFETY LIMITS FOR U COMPOUNDS AND MIXTURES THAT ARE LESS THAN 2.1 PERCENT

%235U	Mass (U lbs)	Volume[1] (Max. Capacity in gal)
≤0.98	Unlimited	Unlimited
≤1.25	2000	179
≤2.0	252	30
≤2.1	215	26

[1] The capacity of a container shall not exceed the listed capacity for a give enrichment.

TABLE 9
NUCLEAR SAFETY REQUIREMENTS FOR CONTAMINATED MATERIALS LESS THAN 2.1 PERCENT

%235U	U LB/FT[3]	U G/L	U LB/GAL
≤0.98	200	3200	26.7
≤1.25	25	400	3.3
≤2.1	14.8	238	2.0

(1) Materials with density equal to, or less than, those listed above may be handled and stored as unlimited.

TABLE 10
NUCLEAR SAFETY LOAD LIMITS ON VEHICLES

Type of Nuclear Safety Control	Spacing Requirements on Vehicle	Maximum Nuclear Safety Load Per Vehicle
Mass restricted material	2 feet between safe masses	2 safe masses
Slab or mass/unit area restricted materials	0 spacing between masses	2 safe masses
Cylinder and volume restricted material	N/A	1 safe volume or 1 safe cylinder
Secured cylinder or volume restricted material	2 feet between units	2 units
Unlimited category material	N/A	Vehicle load limit

e 8 e 9

Westinghouse Materials Company of Ohio
P. O. BOX 398704
CINCINNATI, OHIO 45239

NUCLEAR MATERIAL RECEIVING REPORT

NUCLEAR MATERIAL RECEIVING REPORT NO.: _____

DATE UNLOADED _____ 19 ____ DATE RECEIVED _____ 19 ____

RECEIVED FROM _____

CARRIER _____ CAR NUMBER _____ SEAL NUMBER _____

FREIGHT BILL NO. _____ BILL LADING NO. _____

NUMBER OF ITEMS RECEIVED _____ TYPE OF ITEMS RECEIVED _____ GROSS WEIGHT _____

MATERIAL DESCRIPTION AS PER BILLING _____ NLT. NO. _____

CHECKED BY: _____ RECEIVED BY: _____

NOTE: The following must be completed by the person verifying receipt.

CONSIGNOR'S INFORMATION			DESCRIPTION OF MATERIAL	RECEIVING SECTION INFORMATION			
LOT NUMBER	QUANTITY	WEIGHT (LBS)		GROSS (LBS)	TARE (LBS)	NET (LBS)	ELEMENT WG

REMARKS *(Related document numbers for additional material received)* _____

FMPC-ADMS-613 (REV. 5/22/95)

NUCLEAR MATERIALS RECEIVING REPORT
FMPC-ADMS-613
Figure 1

Westinghouse Materials Company of Ohio
P. O. Box 398704
Cincinnati, Ohio 45239-8704

REQUEST FOR AUTHORIZATION TO SHIP NUCLEAR MATERIAL

DATE	AUTHORIZATION NUMBER	SHIPMENT CLASSIFICATION	MATERIAL CLASSIFICATION
PO NUMBER	TASK NUMBER	SCRAP DECLARATION NUMBER	
SHIPPER			741 NUMBER
REQUESTED SHIPPING DATE	PRODUCTION/TECHNICAL REPRESENTATIVE		
ORGANIZATION			TELEPHONE NUMBER

NUCLEAR MATERIAL CHEMICAL/PHYSICAL DESCRIPTION *(INDICATE TYPE AND QUANTITY OF PRECIOUS METALS, IF ANY)*

NOTE: PLEASE ATTACH DETAIL INFORMATION DESCRIBING INDIVIDUAL ITEMS INCLUDING NET WEIGHT, SNM VALUE, % ENRICHMENT, ISOTOPIC VALUE AND MATERIAL COMPOSITION.

TYPE AND NUMBER OF OUTER CONTAINERS

METHOD OF PACKAGING *(INCLUDE DETAILED INFORMATION ON TYPE OF INNER CONTAINERS AND SPECIAL INSTRUCTIONS FOR OPENING AND UNPACKING MATERIAL, IF REQUIRED).*

NM REPRESENTATIVE/ALTERNATE	DATE

WMCO REVIEW AND APPROVAL

REVIEWED BY PRODUCTION/TECHNICAL REPRESENTATIVE

NAME: _____ ORGANIZATION: _____ DATE: _____

REVIEWED BY HEALTH/SAFETY REPRESENTATIVE

NAME: _____ ORGANIZATION: _____ DATE: _____

APPROVED FOR SHIPMENT BY

NM REPRESENTATIVE/ALTERNATE: _____ DATE: _____

FMPC-PM&PI-1171 (5/4/87)

NUCLEAR SAFETY OPERATIONAL AUTHORIZATION
FS-F-1354
Figure 2

NUCLEAR MATERIAL TRANSFER RECORD

CARD PL.	CARD NO.
	68

NEGATIVE	DATE TRANSFERRED MO.	DAY	YEAR	SHIFT	TRANS. BY BADGE NO.

NOTE: Green card is for receiver information ONLY and may be retained in file. DO NOT FORWARD to Data Processing. DO NOT LEAVE with the material.

P.O. NO.:	SOURCE:	MBA: (FROM)	PLANT:	NO. OF CONTAINERS OR ITEMS: NUMBER / DESCRIPTION
MATERIAL CLASS:	MATERIAL TYPE:	MBA: (TO)	PLANT:	GROSS WEIGHT:
LOT SEQUENCE NO.:		STORAGE LOCATION:		TARE WEIGHT:
MATERIAL DESCRIPTION				
SHAPE CODE:				

SIGNATURES:

FS-F-1990 (REV. 3/9/92) (SHIPPER) (TRANSPORTATION) (RECEIVER)

NUCLEAR MATERIAL RECEIPT RECORD

CARD PL.	CARD NO.
	69

NOTE: Green card is for receiver information ONLY and may be retained in file. DO NOT FORWARD to Data Processing. DO NOT LEAVE with the material.

NEGATIVE	DATE TRANSFERRED MO.	DAY	YEAR	SHIFT	TRANS. BY BADGE NO.

P.O. NO.:	SOURCE:	MBA: (FROM)	PLANT:	NO. OF CONTAINERS OR ITEMS: NUMBER / DESCRIPTION
MATERIAL CLASS:	MATERIAL TYPE:	MBA: (TO)	PLANT:	GROSS WEIGHT:
LOT SEQUENCE NO.:		STORAGE LOCATION:		TARE WEIGHT:
MATERIAL DESCRIPTION				
SHAPE CODE:				

SIGNATURES:

FS-F-2220 (REV. 3/9/92) (SHIPPER) (TRANSPORTATION) (RECEIVER)

MATERIAL IDENTIFICATION RECORD

CARD PL.	CARD NO.
	XX

NOTE: Green card is for receiver information ONLY and may be retained in file. DO NOT FORWARD to Data Processing. DO NOT LEAVE with the material.

NEGATIVE	DATE TRANSFERRED MO.	DAY	YEAR	SHIFT	TRANS. BY BADGE NO.

P.O. NO.:	SOURCE:	MBA: (FROM)	PLANT:	NO. OF CONTAINERS OR ITEMS: NUMBER / DESCRIPTION
MATERIAL CLASS:	MATERIAL TYPE:	MBA: (TO)	PLANT:	GROSS WEIGHT:
LOT SEQUENCE NO.:		STORAGE LOCATION:		TARE WEIGHT:
MATERIAL DESCRIPTION				
SHAPE CODE:				

SIGNATURES:

FS-F-2221 (REV. 3/9/92) (SHIPPER) (TRANSPORTATION) (RECEIVER)

NUCLEAR MATERIAL TRANSFER/RECEIPT/IDENTIFICATION RECORD
FS-F-1990-2220-2221
Figure 3

6989

RECORD OF REVISIONS

DATE	REV. NO.	DESCRIPTION AND AUTHORITY
02-16-93	0	Reissued to update to current Document Program requirements per Request No. P92-302, initiated by L. Moody. SOP 20-C-100 supersedes SOP 20-C-101 and SOP 20-C-102.
10-04-94	0	Reissued to update technical content per Request P94-0340 initiated by S. Moore.

6989

STEP 5.

6989

CONTROL NUMBER: _____
SITE PROCEDURE PT-0005 (SSOP-0075)
REVISION NO. 2

PACKAGING LOW-LEVEL RADIOACTIVE WASTE (LLRW) IN DRUMS FOR SHIPMENT TO THE NEVADA TEST SITE

NON-CONTROLLED COPY

Effective Date: 03-30-95

Originator (Subject Expert): Robert P Gimel 3/15/95
Date

Checker Concurrence: Robert A [illegible] 3/16/95
Date

APPROVED BY: M West 3/16/95
Mike West, FAM of Packaging and Transportation — Date

FERNALD ENVIRONMENTAL MANAGEMENT PROJECT

Fernald Environmental Restoration Management Corporation
P. O. Box 538704
Cincinnati, Ohio 45253-8704

Title: **PACKAGING LOW-LEVEL RADIOACTIVE WASTE (LLRW) IN DRUMS FOR SHIPMENT TO THE NEVADA TEST SITE** *COMPLIANCE WITH THIS PROCEDURE IS MANDATORY WHILE PERFORMING THE ACTIVITIES WITHIN ITS SCOPE*	DOCUMENT NO: PT-0005 (SSOP-0075)	
	Date: 03-30-95	Revision No. 2
	Page 1 of 19	

TABLE OF CONTENTS

SECTION	TITLE	PAGE
1.0	PURPOSE	3
2.0	SCOPE	3
3.0	REFERENCES	3
4.0	RESPONSIBILITIES	3
5.0	GENERAL	4
6.0	PREREQUISITES	4
7.0	PROCEDURE	6
7.1	INSPECTING WASTE	6
7.2	PREPARING AN EMPTY DRUM	7
7.3	FILLING THE DRUM WITH WASTE MATERIAL	8
7.4	WEIGHING THE FILLED DRUM	9
8.0	DRIVERS	11
9.0	DEFINITIONS	11

LIST OF TABLES

TABLE 1 - CORROSION INSPECTION TYPES 12
TABLE 2 - LEAKER INSPECTION TYPES 13
TABLE 3 - DENT/BULGE INSPECTION TYPES 14
TABLE 4 - WEIGHT LIMITATIONS FOR SHIPMENTS BEFORE 1996 14

LIST OF ATTACHMENTS

ATTACHMENT A - PROHIBITED MATERIALS 15
ATTACHMENT B - PROCESS AREA SCRAP CHECKLIST 16
ATTACHMENT C - FERNALD SITE CONTAINER REQUEST 17
ATTACHMENT D - LOCATIONS FOR LLRW DRUM LABELING 18
ATTACHMENT E - ITEM PRODUCTION/CERTIFICATION/IDENTIFICATION 19

ISSUE AND REVISION SUMMARY

Revision	Date	Description of Issue or Revision
0	12-14-92	Separate procedure written, using information from SSOP-0024, for packaging LLRW in drums per Request No. S92-123, initiated by M. Hundley. SSOP-0075, SSOP-0078, and SSOP-0079 replace SSOP-0024.
1	10-04-94	Major revision to reflect company name change from WEMCO to FERMCO and update the procedure per Request No. S93-095, initiated by Lori Hurst. This document supersedes SSOP-0075, dated 12-14-92, Rev. 0.
2	03-30-95	Major revision to omit the labeling, marking, and inspecting sections and outline the latest responsibility changes per Request No. S94-174, initiated by B. Giessl. This document replaces SSOP-0075, dated 10-04-94, Rev. 1.

Title: **PACKAGING LOW-LEVEL RADIOACTIVE WASTE (LLRW) IN DRUMS FOR SHIPMENT TO THE NEVADA TEST SITE** *COMPLIANCE WITH THIS PROCEDURE IS MANDATORY WHILE PERFORMING THE ACTIVITIES WITHIN ITS SCOPE*	DOCUMENT NO: PT-0005 (SSOP-0075)	
	Date: 03-30-95	Revision No. 2
	Page 3 of 19	

1.0 PURPOSE

1.1 This procedure provides the instructions for packaging low level radioactive waste (LLRW) in drums for shipment offsite from the Fernald Environmental Management Project (FEMP).

2.0 SCOPE

2.1 This procedure outlines the steps for (1) inspecting the waste to be packaged, (2) inspecting and preparing the empty drums, (3) filling the drums, (4) weighing the filled drums, and (5) securing the drums.

2.2 The packaging operation is applicable to FEMP personnel (including subcontractors) responsible for packaging LLRW in open-head drums at any packaging location of the FEMP site.

3.0 REFERENCES

3.1 EW-0001, Completing the Material Evaluation Form

3.2 PT-0003, Control and Movement of Containers at the FEMP

3.3 PT-0011, Evaluating Low Level Radioactive Waste (LLRW) Bulk Waste Streams for Shipment

3.4 SOP 20-C-600, Overpacking Defective Containers

3.5 MCA-I-018, Completing the Item Production/Certification/Identification Form

3.6 RM-0005, FEMP Lot Marking and Color-Coding System

4.0 RESPONSIBILITIES

4.1 Packager inspects waste and containers and packages waste per this procedure. Complies with any additional requirements specified by S&H.

4.2 LLW Packaging Support verifies drums are empty and in acceptable condition before packaging. Verifies contents of drums. Coordinates the movement of drums.

4.3 Waste Characterization provides documentation supporting characterization of all LLRW packaged under this procedure.

4.4 Materials Control and Accountability (MC&A) provides bar-code labels. Maintains records and inventory of drums. Tracks movement of empty and full drums.

4.5 Safety & Health (S&H) provides a Radiological Control Technician (RCT), as requested. Determines appropriate respiratory equipment and any other employee protection.

4.6 Supervisor of Waste Generation Area specifies applicable scale procedures and standard tare weight of packages. Ensures packaging materials are available for packagers. Ensures that personnel have currently and successfully completed training in packaging waste material. Ensures that personnel who package waste for shipment follow applicable NTS criteria and DOT and EPA regulations. Contacts S&H to determine the appropriate respiratory protection for the process being performed and the radiological surveys required for materials moving in and out of contamination areas. Provides packagers with the required respiratory protection and other personal protective equipment. Ensures the lid on a drum is secured after packaging so unknown materials are not added. Ensures waste packages are weather-protected. Contacts S&H before opening any drum of unknown radioactive material.

4.7 Motor Vehicle Operator (MVO) delivers empty drums to designated areas. Supports packager when performing scale inspection/test. Transports packaged waste to the applicable storage area.

4.8 Performance/Quality Assurance (P/QA) overviews packaging operation to verify compliance with this procedure.

5.0 GENERAL

5.1 Any circumstance which could have resulted in an intake of radioactive materials by inhalation, ingestion, or absorption shall be immediately reported to a supervisor. The supervisor shall immediately report the circumstance of possible radioactive materials intake to the S&H Radiological Control (RC) Department for evaluation. When the suspect isotope is uranium, the involved employee(s) shall report to the Urine Sampling Station at the end of their shift to complete an FS-F-1458, "Incident Investigation Report" (IIR), and submit a urine sample. The involved employees shall also report to the Urine Sampling Station at the start of their next shift to submit a follow-up urine sample. When the suspect isotope is something other than uranium, the involved employees shall report to the Dosimetry Section of RC for further determination of actions. Employee(s) are responsible for complying with appropriate requirements as specified by authorized S&H staff.

6.0 PREREQUISITES

6.1 Safety glasses with side shields shall be worn unless other eye protection is specified by S&H.

6.2 Respiratory protection provided by the supervisor shall be worn when required.

6.3 Gloves shall be worn when handling drums, operating equipment, and handling rough, sharp-edged, or contaminated material.

6.4 Neoprene rubber gloves shall be worn when handling hazardous chemical substances where skin contact is possible.

6.5 A Radiation Work Permit (RWP) must be approved and current.

6.6 Face shields shall be worn when removing lids of drums filled with liquids or during operations where personnel could be splashed with liquids.

6.7 Drums filled with unknown material shall be labelled "UNKNOWN" (with the current date). Empty drums shall be marked "EMPTY."

6.8 HEPA type filter vacuum cleaners or a vacuum system approved by S&H with a current DOP test label properly affixed to vacuum shall be used for cleaning.

6.9 Obtain the following items/supplies before preparing drums and packaging waste:

- indelible ink marker
- black paint, red paint, white paint (as applicable)
- 15/16 inch combination wrench
- impact wrench
- wire and wire pullers
- drum labels (as applicable)
- lab label tape and dispenser
- absorbent pads

6.10 "Prohibited Materials" list (Attachment A) and packaging guidelines shall be displayed in the packaging area.

6.11 The "Process Area Scrap Checklist" (Attachment B) shall be displayed in the packaging area or on the container when packaging Waste Stream ONL0000000001 process area scrap.

6.12 An FS-F-3252, "Material Evaluation Form (MEF)," shall be completed to determine if the waste is RCRA or non-RCRA. The packaging operation may not be started before the characterization is completed and an MEF is assigned by WC in accordance with EW-0001.

6.13 A minimum of two packagers shall package waste.

6.14 Packagers shall be qualified in the use of Personnel Protective Equipment (PPE).

6.15 Employees shall be briefed on and sign the RWP (in black ink) before performing work.

7.0 PROCEDURE

7.1 INSPECTING WASTE

Packager

7.1.1 Ensure the waste to be packaged is not on the "Prohibited Materials" list (Attachment A) and can pass the "Process Area Scrap Checklist" (Attachment B).

NOTE: Packaging waste listed on the "Prohibited Materials" list or that does not pass the "Process Area Scrap Checklist" is not permitted.

a. If waste is not on the "Prohibited Materials" list and passes the "Process Area Scrap Checklist," continue procedure.

OR

b. If waste is on the "Prohibited Materials" list or does not pass the "Process Area Scrap Checklist," notify a supervisor for disposition before continuing procedure.

7.1.2 Ensure the waste characterization has been completed and an MEF has been obtained from WC.

a. If the waste characterization has been completed, package it per this procedure.

OR

b. If the waste characterization has not been completed, inform Supervisor to contact WC for disposition before continuing procedure.

7.1.3 Visually check waste for free liquid (including ice).

a. If free liquid is present, notify supervisor for disposition before continuing procedure.

OR

b. If free liquid is not present, continue procedure.

Performance/Quality Assurance

7.1.4 Perform periodic surveillances of waste per applicable department procedures.

7.2 PREPARING AN EMPTY DRUM

Waste Generator

7.2.1 Notify Container Distribution Facility (CDF) when containers are needed. Include an FS-F-3468, "Fernald Site Container Request" (Attachment C), signed by the Control Account Manager (CAM).

Container Distribution

7.2.2 Visually inspect container following PT-0003 before distributing.

LLW Packaging Support

7.2.3 Request container transport to the waste loading site.

7.2.4 Verify that the drum interior and exterior does not have damage, such as corrosion, bulges, dents, holes, leaks, or other defects (refer to Tables 1, 2, and 3).

a. If drum is damaged, notify supervisor to contact the CDF for disposition.

OR

b. If drum is not damaged, continue procedure.

7.2.5. Verify the drum(s) have an inventory number on a bar code on the side of the drum.

7.2.6 Visually inspect the interior to ensure the drum is empty.

a. If material is present notify CDF for disposition before continuing procedure.

OR

b. If no material is present, continue procedure.

Supervisor

7.2.7 Specify the scale to be used for weighing the empty drums.

Packager

7.2.8 Specify the method of transporting the drum to the scale.

7.2.9 Inspect the scale to be used per the scale procedure applicable to the area.

7.2.10 Place drum on scale.

7.2.11 Tare weigh drum per the scale procedure applicable to the area.

7.2.12 Record the tare weight on the drum with indelible ink or paint (see Attachment D).

7.2.13 Remove drum from scale.

Motor Vehicle Operator

7.2.14 Move drum to loading area.

Supervisor

7.2.15 Notify P/QA that the container has been prepared.

Performance/Quality Assurance

7.2.16 Inspect container preparation per applicable department procedure for compliance with this procedure.

NOTE: Only periodic inspections of container preparation are required for areas pre-approved by P/QA.

7.3 FILLING THE DRUM WITH WASTE MATERIAL

Performance/Quality Assurance Inspection Services

7.3.1 Overview filling of drums to ensure compliance with this procedure.

Packager

7.3.2 Remove lock ring and lid from empty drum.

WARNING

A RESPIRATOR AND OTHER PERSONAL PROTECTIVE EQUIPMENT, SPECIFIED IN THE HEALTH AND SAFETY PLAN AND PROVIDED BY THE SUPERVISOR, SHALL BE DONNED PRIOR TO FILLING CONTAINERS TO PREVENT INHALATIONS AND EXPOSURES.

NOTE: Any waste encountered in the packaging operation not covered by the MEF or that does not meet the "Process Area Scrap Checklist" requirements shall be set aside and shall not be packaged without the Supervisor contacting WC for disposition instructions.

7.3.3 Fill drum with LLRW ensuring the waste level remains three inches below top of drum.

NOTE: The volume of waste to be packed will vary because the density varies according to waste type.

7.3.4 Place lid on drum ensuring gasket is seated to maintain a tight seal.

7.3.5 Install bolt-type lock ring on lid.

7.3.6 Complete a "Process Area Scrap Checklist" per SOP 20-C-625.

7.3.7 Complete a Form FS-F-1945, "Item Production/Certification/ Identification" 65 Card (Attachment E), for each box following MCA-I-018, "Completing the Item Production/Certification/ Identification Form."

7.3.8 Notify the supervisor that the drums are ready to be weighed.

7.4 <u>WEIGHING THE FILLED DRUM</u>

Supervisor

7.4.1 Specify scale for weighing the filled drum.

7.4.2 Specify the method of transporting drum to scale.

Packager

7.4.3 Inspect scale to be used per the applicable scale procedure.

Motor Vehicle Operator

7.4.4 Move drum onto the scale.

Packager

7.4.5 Weigh drum using applicable scale procedure.

a. If weight is within limits (see Table 4), continue procedure.

<u>OR</u>

b. If weight is not within limits, do the following:

(1) Remove lock ring and lid from drum.

(2) Transfer waste from drum into approved container until gross weight of drum is within limits.

NOTE: The approved container may be an underweight drum from the same lot or an empty drum from the same lot.

(3) Change the waste description on the 65 Card, if needed.

(4) Place lid on drum.

(5) Re-install bolt-type lock ring on lid.

Motor Vehicle Operator

7.4.6 Remove the drum from the scale.

Supervisor

7.4.7 Do one of the following:

a. For a drum requiring temporary storage, do the following:

(1) Notify MC&A that container is full.

(2) Label/Mark the drum per RM-0005 and SOP 20-C-600.

OR

b. For a drum not requiring temporary storage, continue procedure.

Packager

7.4.8 Mark the shipment number and the gross weight on the lid of the drum (see Attachment D) in indelible ink or paint.

7.4.9 Calculate net weight.

7.4.10 Record the weight on the 65 Card.

Supervisor

7.4.11 Sign 65 Card indicating accuracy and completeness.

7.4.12 Complete and sign the appropriate form(s).

7.4.13 Forward 65 Card and the appropriate form(s) to LLW Packaging Support.

LLW Packaging Support

7.4.14 Review, sign, and distribute the 65 Card and the appropriate form(s).

Materials Control & Accountability (MC&A)

7.4.15 Mark inventory number and container number on lid of drum (see Attachment D).

7.4.16 Print required bar code labels and submit to supervisor.

8.0 DRIVERS

8.1 NVO-325, Nevada Test Site Defense Waste Acceptance Criteria, Certification, and Transfer Requirements

8.2 S/RID 12, Packaging & Transportation

8.3 49 CFR, Section 173

9.0 DEFINITIONS

Drum - A cylindrical, metal open-head container which meets Department of Transportation (DOT) and Environmental Protection Agency (EPA) requirements, and Nevada Test Site (NTS) acceptance criteria. See Table 4 for specifications.

Free Liquid - Any free flowing liquid or any liquid that readily separates from the solid portion of a waste under ambient temperature and pressure conditions. Ice is also considered a free liquid.

Low-Level Radioactive Waste (LLRW) - All radioactive waste not classified as high-level waste, spent nuclear fuel, Transuranic (TRU) waste, uranium mill tailings, or Mixed Waste (MW).

Resource Conservation and Recovery Act (RCRA) - The Congressional Act which established safe and environmentally acceptable management practices for specific wastes. RCRA requires strict "cradle to grave" control, documentation, and proper management of hazardous wastes.

TABLE 1
CORROSION INSPECTION TYPES

TYPE	CHARACTERISTIC	COULD CAUSE LOSS OF BOX INTEGRITY		CORRECTIVE ACTION
		YES	NO	
1	Holes, large dents, or large areas of corrosion that affect the structural integrity of the container or require the entire drum to be painted	X		1. Notify Maintenance to patch. Overpack or repackage in another container. **NOTE**: Supervisors ensure that touchup or painting is completed. 2. Notify P/QA and MC&A of all repairs or repackaging of waste containers.
2	Heavy rust with areas of pitted metal flaking (> 18 square inches - hand size) and no holes present		X	1. HAZWATS scrape loose oxides and paint the area to be repaired.
3	Light surface rust with no pitting of the base metal		X	1. Wipe with masoline cloth or wash with soap and water, if needed to remove dirt. 2. Ship as is.

TABLE 2
LEAKER INSPECTION TYPES

TYPE	CHARACTERISTIC	CORRECTIVE ACTION
1	Material flowing from container and accumulation on, under, or around container	1. Notify supervisor and Radiological Control (RC). 2. Supervisor notifies AEDO. 3. Stop or contain leak at the discretion of the supervisor. 4. Record on inspection form that the container requires mitigation within 24 hours. 5. Complete additional cleanup as necessary. 6. Supervisor initiate an Occurrence Report (OR).
2	Material on container exterior only; no material on, under, or around container	1. Record leak on inspection form. 2. Notify Supervisor and RC. 3. Supervisor shall initiate an OR. 4. Supervisor shall review the completed inspection forms to prioritize containers for transfer to overpack staging area and subsequent mitigation.
3	Container exterior discolored/visible contamination; no material release	1. Record condition on inspection form. 2. Notify Supervisor and RC. 3. Supervisor schedule container for overpacking.

TABLE 3
DENT/BULGE INSPECTION TYPES

TYPE	CHARACTERISTIC	CORRECTIVE ACTION
1	Dents and/or bulges affecting container integrity to the degree of potential or actual release	Overpack or transfer to new container.
2	Dents and/or bulges not affecting container integrity	Continue to monitor.

TABLE 4
WEIGHT LIMITATIONS FOR SHIPMENTS BEFORE 1996

DRUM SIZE	MAXIMUM GROSS WEIGHT
30 gallons	700 pounds
55 gallons *	1,200 pounds
85 gallons *	1,000 pounds
85 gallons overpack *	1,280 pounds

* After December 31, 1995, the maximum gross weight for new packed drums is 932 pounds (423.6 kg) except overpacked drums, for which the maximum weight is 882 pounds.

ATTACHMENT A - PROHIBITED MATERIALS

PACKAGING GUIDELINES FOR WASTE GENERATOR	
Package has been properly prepared for closing when the following conditions exist:	
No liquids of any kind have been placed in container.	
Heavy/bulky items have been secured within container.	
All available space has been utilized efficiently.	
Prohibited materials (listed below) have been excluded.	
Packaging has not been damaged during loading.	
Liner is in place and properly lapped and sealed.	
PROHIBITED MATERIALS AND EXAMPLES	
Compressed Gases	***Corrosive Materials***
unpuctured aerosol cans	*acid or caustic material*
gas cylinders with valves or plugs in place	*acidic*
Free Liquids	***Hazardous Waste***
water, ice, seepage, condensation,	*solvents, petroleum products,*
drinks, coffee, juices, pop, soaked rags,	*lead, mercury, batteries,*
fuel, oil, fluids, solvents, etc.	*pesticides, etc.*
Etiologic Agents	***Explosives***
medical waste	

ATTACHMENT B - PROCESS AREA SCRAP CHECKLIST

SECTION I - WASTE EVALUATION	Yes	No	N/A
1.0 Free Liquids: 1.1 Any free liquids entrapped in nooks, crannies, or folds? 1.2 Did the item contain internal (working) fluids? 1.3 Have internal fluids been drained? 1.4 Has item been tagged "drained?"			
2.0 Electrical Equipment: 2.1 Any light ballasts on the item? 2.2 Any starter caps on the item? 2.3 Any mercury switches on the item? 2.4 Any capacitors bigger than 5 inches in diameter on the item?			
3.0 Excess Residues: 3.1 Any residues on item that could be removed and managed separately? 3.2 Any soils on item that could be removed and managed separately?			
4.0 Painted Material: 4.1 Metal item < 1/8" thick AND more than 10% painted w/ lead-based paint? 4.2 Wood item < 1" thick AND more than 10% painted w/ lead-based paint?			
5.0 Restrictions on Material Type: 5.1 Is the material itself made of lead (Pb)? 5.2 Is the material itself uranium (U) or thorium (Th) metal?			
6.0 Glass: 6.1 Any light bulbs or lamps other than incandescent? 6.2 If sample jars, any material remaining in container?			
7.0 Trash: 7.1 Are there any prohibited items as listed in the posted "prohibited items" list?			
8.0 Property: 8.1 Has all property been administratively processed for disposal as LLW?			

SECTION II - CONTAINER INFORMATION

1. MATERIAL ORIGIN/DESCRIPTION (Provide a detailed description of the materials in the container, including source or origin if available)

2. PACKAGING START DATE:	3. PACKAGING END DATE:	4. INCHES FREEBOARD/HEADSPACE
5. CONTAINER NUMBER:	6. CONTAINER TYPE: ☐ S/L ☐ WMB ☐ Drum ☐ OTHER, Specify:	

7. APPROVED BY: Supervisor(s) Signature/Date	8. ACCEPTED BY: WPM Signature/Date

GENERATOR TO MAKE DISTRIBUTION:

1	White	Waste Characterization
2	Blue	Low-Level Waste Handling and Disposal
3	Yellow	Materials Control and Accountability
4	Green	Waste Generator

ATTACHMENT C - FERNALD SITE CONTAINER REQUEST

Requisition No:

REQUESTED BY:				PHONE NUMBER	MAIL STOP	BADGE NUMBER	
PROJECT							
REQUEST DATE				CONTROL ACCOUNT NUMBER			
CONTAINER TYPE							
ISO	LWMB	SWMB	30 DRUM	55 DRUM	85 DRUM	110 DRUM	ROLL-OFF
QUANTITY REQUESTED							
TO BE SHIPPED TO NTS? YES___ NO__				FOR ONSITE STORAGE? YES___ NO___			
LOCATION FOR DELIVERY:							
CONTACT NAME:				PHONE:	RADIO:		
DELIVERY DATE REQUIRED:				MEF NUMBER			
MATERIAL DESCRIPTION/PWID							
DELIVERY DATE	QUANTITY			DELIVERY DATE	QUANTITY		
SIGNATURES REQUIRED							
CONTROL ACCOUNT MANAGER (REQUIRED)				DATE:			
COMMENTS:							

ATTACHMENT D - LOCATIONS FOR LLRW DRUM LABELING

TYPICAL LABELING OF NON-RCRA OR LOW-LEVEL RADIOACTIVE WASTE DRUM

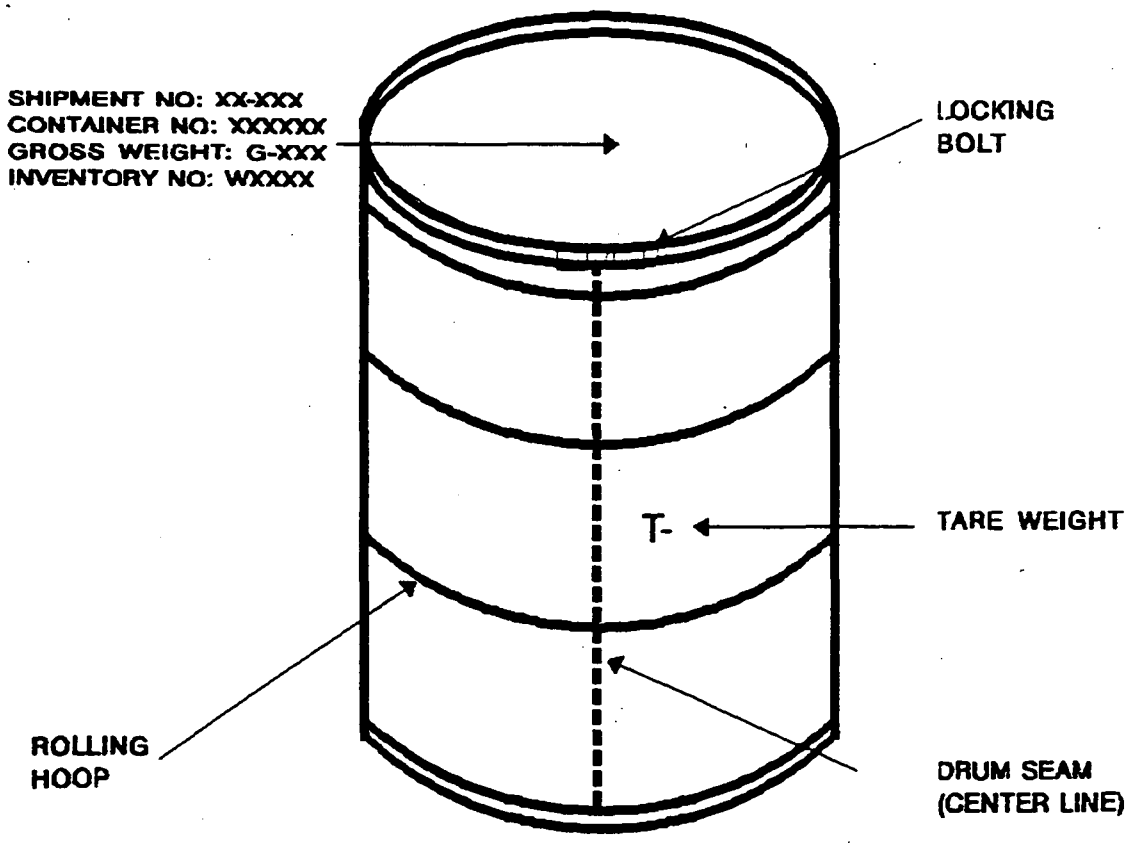

ATTACHMENT E - ITEM PRODUCTION/CERTIFICATION/IDENTIFICATION

CARD 65-1 ITEM PRODUCTION/CERTIFICATION/IDENTIFICATION

DIV. NO:

P.O. NO.	SOURCE	CLASS	MATERIAL TYPE	LOT SEQUENCE NO.	DATE	SHIFT	BADGE NO.	CONT. NO.	SERIAL NO.

SEAL NUMBER	SEAL DATE			PACKAGE PHYSICAL CERTIFICATION			PLANT	PROD. MOA	MEF.NO
	MONTH	DAY	YEAR		YES	NO			
				EMPTY CONTAINER AT START			SCAR	SURV. NO.	GROSS WEIGHT
WASTE DESCRIPTION AND COMMENTS				RUST HOLES OR DENTS					
				MATERIAL IS AS CODED					
PACKAGE TYPE				PROHIBITED MATERIALS					
PACKAGE SIZE				LIQUIDS IN CONTAINER					TARE WEIGHT
PROJECT				MINIMUM OF VOID SPACE					
				PACKAGE SECURED					
				DRAIN PLUG SECURED					
				OVERPACK					NET WEIGHT
				REPACK					

GENERATOR SIGNATURE

SUPERVISOR SIGNATURE DATE

PS-P-1946-1 (REV.11/20/93)

6989

CONTROL NUMBER: _____
SITE PROCEDURE PT-0078 (33CP-0078)
REVISION NO. 2

PACKAGING LOW-LEVEL RADIOACTIVE WASTE (LLRW) IN ISO CONTAINERS FOR SHIPMENT TO THE NEVADA TEST SITE

NON-CONTROLLED COPY

Effective Date: 03-30-95

Originator (Subject Expert): Robert P Grind 3/15/95
Date

Checker Concurrence: [signature] 3/16/95
Date

APPROVED BY: [signature] 3/30/95
Mike West, FAM of Packaging and Transportation
Date

FERNALD ENVIRONMENTAL MANAGEMENT PROJECT

Fernald Environmental Restoration Management Corporation
P. O. Box 538704
Cincinnati, Ohio 45253-8704

Title: PACKAGING LOW-LEVEL RADIOACTIVE WASTE (LLRW) IN ISO CONTAINERS FOR SHIPMENT TO THE NEVADA TEST SITE *COMPLIANCE WITH THIS PROCEDURE IS MANDATORY WHILE PERFORMING THE ACTIVITIES WITHIN ITS SCOPE*	DOCUMENT NO: PT-0006 (SSOP-0078)	
	Date: 03-30-95	Revision No. 2
	Page 1 of 21	

TABLE OF CONTENTS

SECTION	TITLE	PAGE
1.0	PURPOSE	3
2.0	SCOPE	3
3.0	REFERENCES	3
4.0	RESPONSIBILITIES	3
5.0	GENERAL	4
6.0	PREREQUISITES	5
7.0	PROCEDURE	6
7.1	INSPECTING WASTE	6
7.2	PREPARING AN EMPTY ISO CONTAINER	7
7.3	FILLING THE ISO CONTAINER WITH WASTE MATERIAL	9
7.4	SECURING THE ISO CONTAINER	10
7.5	WEIGHING THE FILLED ISO CONTAINER	11
8.0	DRIVERS	12
9.0	DEFINITIONS	12

LIST OF TABLES

TABLE 1 - CORROSION INSPECTION TYPES . . . 13
TABLE 2 - LEAKER INSPECTION TYPES . . . 14
TABLE 3 - DENT/BULGE INSPECTION TYPES . . . 15
TABLE 4 - WEIGHT AND FREEBOARD LIMITATIONS . . . 15

LIST OF ATTACHMENTS

ATTACHMENT A - PROHIBITED MATERIALS . . . 16
ATTACHMENT B - PROCESS AREA SCRAP CHECKLIST . . . 17
ATTACHMENT C - MATERIALS EVALUATION AND CONTAINER INFORMATION - SCRAP VEHICLE . . . 18
ATTACHMENT D - FERNALD SITE CONTAINER REQUEST . . . 19
ATTACHMENT E - ISO LABELING LOCATIONS . . . 20
ATTACHMENT F - ITEM PRODUCTION/CERTIFICATION/IDENTIFICATION . . . 21

ISSUE AND REVISION SUMMARY

Revision	Date	Description of Issue or Revision
0	12-14-92	New procedure required for shipping LLRW in International Shipping Organizational (ISO) containers per Request No. S92-175, initiated by M. Hundley. SSOP-0079, SSOP-0078, and SSOP-0075 replace SSOP-0024.
1	10-04-94	Revision needed to add Tables 1 through 4, add ES&H requirements, update Figure 4, clarify role of Quality Assurance, and incorporate SC93-006 per Request No. S93-072, initiated by Lori Hurst. This document supersedes SSOP-0078, dated 12-14-92, Rev. 0.
2	03-30-95	Major Revision to omit the labeling, marking, and inspecting sections; revise the container preparation activities; and outline the latest responsibility changes per Request No. S94-174, initiated by B. Giessl. This document replaces SSOP-0078, dated 10-04-94, Rev. 1.

1.0 PURPOSE

1.1 This procedure provides the instructions for packaging low-level radioactive waste (LLRW) into ISO containers for shipment offsite from the Fernald Environmental Management Project (FEMP).

2.0 SCOPE

2.1 This procedure outlines the steps for (1) inspecting the waste to be packaged, (2) inspecting and preparing the empty ISO container, (3) filling the ISO with waste, (4) weighing the ISO, and (5) securing the ISO.

2.2 The packaging operation is applicable to FEMP personnel (including subcontractors) responsible for packaging LLRW in ISO containers at any packaging location of the FEMP site.

3.0 REFERENCES

3.1 EW-0001, Completing the Material Evaluation Form

3.2 EW-0006, Management of Excess Soil, Debris, and Waste from a Project

3.3 PT-0003, Control and Movement of Containers at the FEMP

3.4 PT-0011, Evaluating Low Level Radioactive Waste (LLRW) Bulk Waste Streams for Shipment

3.5 MCA-I-018, Completing the Item Production/Certification/Identification Form

4.0 RESPONSIBILITIES

4.1 Packager inspects waste and containers and packages waste per this procedure.

4.2 LLW Packaging Support ensures the box is empty and in acceptable condition before packaging. Ensures contents of ISO Containers. Coordinates the movement of containers.

4.3 Waste Characterization (WC) provides documentation supporting characterization of all LLRW packaged under this procedure.

4.4 Materials Control and Accountability (MC&A) provides bar code labels. Maintains records and inventory of ISO containers. Tracks movement of empty and full containers.

4.5 Safety and Health (S&H) provides a Radiological Safety Technician, as requested. Determines appropriate respiratory equipment and any other employee protection.

4.6 Supervisor of the Waste Generation Area specifies applicable scale procedures and standard tare weight of packages. Ensures packaging materials are available for packagers. Ensures that currently trained personnel package waste material. Ensures that personnel who package waste for shipment follow applicable Nevada Test Site (NTS) criteria and Department of Transportation (DOT) and Environmental Protection Agency (EPA) regulations. Contacts S&H to determine the appropriate respiratory protection for the process being performed and the radiological surveys required for materials moving in and out of contamination areas. Contacts Radiological Control (RC) for a Radiological Work Permit (RWP) or other safety permits and ensures permits are obtained and signed prior to performing work. Provides packagers with the required respiratory protection and other personal protective equipment. Ensures doors are secured after packaging so unknown materials are not added. Ensures waste packages are weather-protected. Contacts S&H prior to opening any container of unknown radioactive material.

4.7 Motor Vehicle Operator (MVO) delivers empty boxes to designated packaging location. Supports packager as needed per this procedure.

4.8 Performance/Quality Assurance (P/QA) overviews packaging operation to verify compliance with this procedure.

5.0 GENERAL

5.1 Any circumstance that could have resulted in an intake of radioactive materials by inhalation, ingestion, or absorption shall be immediately reported to a supervisor. The supervisor shall immediately report the circumstance of possible radioactive materials intake to S&H RC Department for evaluation. When the suspect isotope is uranium, the involved employees shall report to the Urine Sampling Station at the end of their respective shift to complete an FS-F-1458, "Investigation Report" (IR), and submit an incident urine sample. The involved employees shall also report to the Urine Sampling Station at the start of their next shift to submit a follow-up urine sample. When the suspect isotope is other than uranium, the involved employee(s) shall report to the Dosimetry Section of RC for further determination of actions. Employees are responsible for complying with appropriate requirements as specified by authorized ES&H staff.

5.2 The following substitutions should be made for Contaminated Construction Removal Action Waste and Waste Stream ONL0000000002:

- Waste characterization may be performed using SSOP-0044, "Management of Excess Soil, Debris, and Waste from a Project.
- A Packager could be the subcontractor or FEMP personnel.

- A Supervisor could be the Construction Coordinator if a project is subcontracted.

5.3 DOT label letter shall be 2 inches high by 1/4 inch wide.

6.0 PREREQUISITES

6.1 Safety glasses with side shields shall be worn unless other eye protection is specified.

6.2 Respiratory protection provided by the supervisor shall be worn when required.

6.3 Gloves shall be worn when handling containers, operating equipment and when handling rough, sharp-edged, or contaminated material.

6.4 Neoprene rubber gloves shall be worn when handling HEPA type filter vacuum cleaners, or a vacuum system approved by ES&H.

6.5 Vacuum cleaners with HEPA type filters or a current DOP test label properly affixed to vacuum shall be used for cleaning.

6.6 An RWP must be approved and current.

6.7 Face shields shall be worn when removing lids or bungs of containers filled with liquids or during operations where personnel could be splashed with liquids.

6.8 Containers with unknown contents shall be labeled "UNKNOWN" (with the current date). Empty containers shall be marked "EMPTY."

6.9 Obtain the following items/supplies prior to performing the packaging operation:

- appropriate safety protective equipment
- absorbent pads
- 1/4-inch x 4-foot x 8-foot plywood sheets (all grades)
- indelible marker
- black paint, red paint, white paint (as applicable)
- clean rags
- 1-1/2 inch black metal bands, clips, and banding equipment

6.10 "Prohibited Materials" list (Attachment A) shall be displayed in the packaging area or on the container.

6.11 The "Process Area Scrap Checklist" (Attachment B) shall be displayed in the packaging area or on the container when packaging Waste Stream ONL0000000001 process area scrap.

6.12 An FS-F-3252, "Material Evaluation Form (MEF)," shall be completed to determine if the waste is RCRA or non-RCRA. The packaging operation may not be started before the characterization is completed and an MEF is assigned by WC in accordance with SSOP-0002.

6.13 A minimum of two personnel are required to package waste.

6.14 Packagers shall be qualified in use of Personal Protective Equipment (PPE).

6.15 Employees shall be briefed on and sign the RWP in black ink before performing work.

7.0 PROCEDURE

7.1 INSPECTING WASTE

Packager

7.1.1 Ensure the waste to be packaged is not on the "Prohibited Materials" list (Attachment A) and can pass either the "Process Area Scrap Checklist" (Attachment B) or the "Material Evaluation and Container Information - Scrap Vehicle" (Attachment C), when applicable.

a. If the waste is on the Prohibited Materials List or does not pass the "Process Area Scrap Checklist" or the "Material Evaluation and Container Information - Scrap Vehicle," notify supervisor for disposition before continuing procedure.

OR

b. If the waste is not on the Prohibited Materials List and passes either the "Process Area Scrap Checklist" or the "Material Evaluation and Container Information - Scrap Vehicle," continue procedure.

7.1.2 Ensure the waste characterization has been completed and an MEF has been obtained from WC.

a. If the waste characterization has been completed, package it per this procedure.

OR

b. If the waste characterization has not been completed, inform Supervisor to contact WC for disposition before continuing procedure.

7.1.3 Visually check waste for free liquid (including ice).

a. If free liquid is present, notify supervisor for disposition before continuing procedure.

OR

b. If free liquid is not present, continue procedure.

Performance/Quality Assurance

7.1.4 Perform periodic surveillances of waste per applicable department procedures.

7.2 PREPARING AN EMPTY ISO CONTAINER

Waste Generator

7.2.1 Notify Container Distribution Facility (CDF) when containers are needed. Include an FS-F-3468, "FEMP Container Request" (Attachment D), signed by the Control Account Manager (CAM).

Container Distribution Facility

7.2.2 Visually inspect containers following PT-0003 before distributing.

LLW Packaging Support

7.2.3 Request container transfer to waste loading site.

7.2.4 Visually inspect interior and exterior of container for damage, such as corrosion/rust, hole, leak, breach, or dent per Tables 1, 2, and 3.

a. If the container is damaged, inform supervisor to contact the CDF for disposition.

OR

b. If the container is not damaged, continue procedure.

NOTE: ISO containers will be sealed by the supplier as of June, 1995. If old ISO containers are to be used that are not sealed by the supplier, preparation instructions will be provided by LLW Packaging Support.

7.2.5 Visually inspect interior of container to ensure the container is empty except for 2 layers of absorbent material and plywood used to go over absorbent material and protect the sides of the containers.

a. If other material is present or if plywood and absorbent material is not present, notify supervisor for disposition before continuing procedure.

OR

b. If other material is not present, continue procedure.

7.2.6 Verify that the ISO has an inventory number on a bar code on the side of the container (see Attachment E). If it does not, notify CDF before continuing procedure.

7.2.7 Spread two layers of absorbent pads on container floor, permitting no gaps and allowing padding to extend 3 inches (±1 inch) upward along each wall.

NOTE: Doorway edge shall remain free of padding at this time.

Packager

7.2.8 Starting at the back of container, place plywood sheets over the pads, overlapping, across the container floor to the doorway.

7.2.9 Lean three plywood sheets along each container side and one plywood sheet along the back wall.

7.2.10 Adhere a "Prohibited Materials" list and a "Process Area Scrap Checklist" (when applicable) to interior side of door.

7.2.11 Inform supervisor the container preparation is complete.

Supervisor

7.2.12 Notify P/QA that the container has been prepared.

Performance/Quality Assurance

7.2.13 Inspect container preparation per applicable department procedure for compliance with this procedure.

NOTE: Only periodic inspections of container preparation are required for areas pre-approved by P/QA.

7.3 FILLING THE ISO CONTAINER WITH WASTE MATERIAL

LLW Packaging Support

7.3.1 Maintain communication with P/QA to permit P/QA to view filling of containers in accordance with applicable department procedure.

Performance/Quality Assurance

7.3.2 Check for nonconformance and do one of the following:

a. If a nonconformance is identified, document and evaluate for corrective action per applicable procedure and notify supervisor to have nonconformance corrected.

OR

b. If nonconformance is not identified, continue procedure.

Packager

WARNING

A RESPIRATOR AND OTHER PERSONAL PROTECTIVE EQUIPMENT, SPECIFIED IN THE HEALTH AND SAFETY PLAN AND PROVIDED BY THE SUPERVISOR, SHALL BE DONNED PRIOR TO FILLING CONTAINERS TO PREVENT INHALATIONS AND EXPOSURES.

NOTE: Any waste encountered in the packaging operation not covered by the MEF or that does not meet either the "Process Area Scrap Checklist" or Material Evaluation and Container Information - Scrap Vehicle" requirements shall be set aside and shall not be packaged without the Supervisor contacting WC for disposition instructions.

7.3.3 Load waste into container as tightly as possible ensuring the container is within the specified weight and freeboard limitations (see Table 4) and the load is balanced to prevent tipping. Aggregate material shall be carefully loaded to minimize damage, settling, and shifting during transportation.

NOTE: To allow for ice build-up in winter, maximum weight for shipments is 40,000 pounds if shipped between November and March and 42,000 pounds if shipped between April and October.

7.3.4 Complete either a "Materials Evaluation and Container Information - Scrap Vehicle" form (Attachment C) per PT-0011 or a "Process Area Scrap Checklist (Attachment B).

7.3.5 Initiate an FS-F-1945, "Item Production/Certification/Identification," 65 Card (Attachment F) per MCA-I-018, "Completing the Item Production/Certification/Identification Form."

7.3.6 Calculate tare weight by adding 325 pounds to the weight of the container.

7.3.7 Forward the 65 Card and the "Materials Evaluation and Container Information" form or the "Process Area Scrap Checklist" to LLW Packaging Support.

LLW Packaging Support

7.3.8 Review, sign, and send the 65 Card and the "Materials Evaluation & Container Information" form or the "Process Area Scrap Checklist" to MC&A.

7.4 SECURING THE ISO CONTAINER

Performance/Quality Assurance

7.4.1 Perform final examination of contents and complete documentation for verification of materials packaged.

NOTE: This documentation may include photographs.

Packager

7.4.2 If directed by supervisor, place two sheets of plywood vertically in front of container doorway for shoring.

7.4.3 Roll (double-thick) absorbent pads together and place evenly along the floor (maintaining continuous contact with floor) in front of the plywood sheets.

7.4.4 Caulk door frame interior and inside edges of each door.

7.4.5 Close the container doors.

7.4.6 Close and latch doors ensuring all latching mechanisms are engaged.

7.4.7 Band doors securely together with 1-1/4 inch bands spaced approximately 2 feet apart around the center locking bars at mid-height of the container.

7.4.8 Secure each band with two double-crimp seals.

LLW Packaging Support

7.4.9 Complete, sign, and distribute the "Process Area Scrap Checklist," if applicable.

7.4.10 Apply a tamper-proof red seal to door.

7.4.11 Notify MC&A and Transportation when container is full and is to be moved.

Supervisor

7.4.12 Specify the scale and the method of transporting the box to the scale.

Packager

7.4.13 Inspect the scale to be used per the applicable scale procedure.

7.5 <u>WEIGHING THE FILLED ISO CONTAINER</u>

Motor Vehicle Operator

7.5.1 Move container onto scale.

NOTE: The scale shall be a currently calibrated accountability scale.

Checker

7.5.2 Fill out weight ticket and transmit to LLW Packaging Support.

a. If box is over 42,000 pounds, notify supervisor and proceed as directed.

<u>OR</u>

b. If box is less than or equal to 42,000 pounds, continue procedure.

Motor Vehicle Operator

7.5.3 Remove container from the scale.

8.0 DRIVERS

8.1 NVO-325, Nevada Test Site Defense Waste Acceptance Criteria, Certification, and Transfer Requirements

8.2 S/RID 12, Packaging & Transportation

8.3 49 CFR, Section 173

9.0 DEFINITIONS

9.1 Free Liquid - Any free flowing liquid or any liquid that readily separates from the solid portion of a waste under ambient temperature and pressure conditions. Ice is also considered a free liquid.

9.2 Freeboard - The amount of allowable void space between packaged materials and the lid of the box.

9.3 ISO Container - An Intermodal container (Dry Cargo Type). Those used at the FEMP typically measure 8-1/2 feet high X 8 feet wide X 20 feet long with two doors on the end. Although frequently referred to as a "Sea/Land" container at the FEMP, an ISO container may be, but is not necessarily, a Sea/Land container. (See Table 4 for specifications.)

9.4 Low-Level Radioactive Waste (LLRW) - All radioactive waste not classified as high-level waste, spent nuclear fuel, Transuranic (TRU) waste, uranium mill tailings, or Mixed Waste (MW).

9.5 Resource Conservation and Recovery Act (RCRA) - The Congressional Act which established safe and environmentally acceptable management practices for specific wastes. RCRA requires strict "cradle to grave" control, documentation and proper management of hazardous wastes.

TABLE 1
CORROSION INSPECTION TYPES

TYPE	CHARACTERISTIC	COULD CAUSE LOSS OF BOX INTEGRITY		CORRECTIVE ACTION
		YES	NO	
1	Holes, large dents, or large areas of corrosion that affect the structural integrity of the container or require the entire side to be painted	X		1. Notify Maintenance to patch. Overpack or repackage in another container. **NOTE**: Supervisors ensure that touchup or painting is completed. 2. Notify P/QA and MC&A of all repairs or repackaging of waste containers.
2	Heavy rust with areas of pitted metal flaking and no holes present		X	1. HAZWATS scrape loose oxides and paint the area to be repaired.
3	Light surface rust with no pitting of the base metal		X	1. Wipe with masoline cloth or wash with soap and water, if needed to remove dirt. 2. Ship as is.

TABLE 2
LEAKER INSPECTION TYPES

TYPE	CHARACTERISTIC	CORRECTIVE ACTION
1	Material flowing from container and accumulation on, under, or around container.	1. Notify supervisor and Radiological Control (RC). 2. Supervisor notify AEDO. 3. Stop or contain leak as directed by supervisor. 4. Record on inspection form that the container requires mitigation within 24 hours. 5. Complete additional cleanup as necessary. 6. Supervisor initiate an Occurrence Report (OR).
2	Material on container exterior only; no material on, under, or around container.	1. Record leak on inspection form. 2. Notify supervisor and RC. 3. Supervisor initiate an OR. 4. Supervisor review the completed inspection forms to prioritize containers for transfer to overpack staging area and subsequent mitigation.
3	Container exterior discolored/visible contamination; no material release.	1. Record condition on inspection form. 2. Notify supervisor and RC. 3. Supervisor schedule container for overpacking.

TABLE 3
DENT/BULGE INSPECTION TYPES

TYPE	CHARACTERISTIC	CORRECTIVE ACTION
1	Dents and/or bulges affecting container integrity to the degree of potential or actual release	Overpack or transfer to new container.
2	Dents and/or bulges not affecting container integrity	Continue to monitor.

TABLE 4
WEIGHT AND FREEBOARD LIMITATIONS

CODE	SHIPPING CONTAINERS	TARE WT (LBS)	WT LIMIT (LBS)
109	Sea/Land - Conventional No. 102"H x 96"W x 238"L Exterior 93"H x 94"W x 232"L Interior	VARIED	42,000 or full

ATTACHMENT A - PROHIBITED MATERIALS

PACKAGING GUIDELINES FOR WASTE GENERATOR	
Package has been properly prepared for closing when the following conditions exist:	
No liquids of any kind have been placed in container.	
Heavy/bulky items have been secured within container.	
All available space has been utilized efficiently.	
Prohibited materials (listed below) have been excluded.	
Packaging has not been damaged during loading.	
Liner is in place and properly lapped and sealed.	
PROHIBITED MATERIALS AND EXAMPLES	
Compressed Gases	*Corrosive Materials*
unpuctured aerosol cans	*acid or caustic material*
gas cylinders with valves or plugs in place	*acidic*
Free Liquids	*Hazardous Waste*
water, ice, seepage, condensation,	*solvents, petroleum products,*
drinks, coffee, juices, pop, soaked rags,	*lead, mercury, batteries,*
fuel, oil, fluids, solvents, etc.	*pesticides, etc.*
Etiologic Agents	*Explosives*
medical waste	

ATTACHMENT B - PROCESS AREA SCRAP CHECKLIST

SECTION I - WASTE EVALUATION	Yes	No	N/A
1.0 Free Liquids: 1.1 Any free liquids entrapped in nooks, crannies or folds? 1.2 Did the item contain internal (working) fluids? 1.3 Have internal fluids been drained? 1.4 Has item been tagged "drained?"			
2.0 Electrical Equipment: 2.1 Any light ballasts on the item? 2.2 Any starter caps on the item? 2.3 Any mercury switches on the item? 2.4 Any capacitors bigger than 5 inches in diameter on the item?			
3.0 Excess Residues: 3.1 Any residues on item that could be removed and managed separately? 3.2 Any soils on item that could be removed and managed separately?			
4.0 Painted Material: 4.1 Metal item < 1/8" thick AND more than 10% painted w/ lead-based paint? 4.2 Wood item < 1" thick AND more than 10% painted w/ lead-based paint?			
5.0 Restrictions on Material Type: 5.1 Is the material itself made of lead (Pb)? 5.2 Is the material itself uranium (U) or thorium (Th) metal?			
6.0 Glass: 6.1 Any light bulbs or lamps other than incandescent? 6.2 If sample jars, any material remaining in container?			
7.0 Trash: 7.1 Are there any prohibited items as listed in the posted "prohibited items" list?			
8.0 Property: 8.1 Has all property been administratively processed for disposal as LLW?			

SECTION II - CONTAINER INFORMATION

1. MATERIAL ORIGIN/DESCRIPTION (Provide a detailed description of the materials in the container, including source or origin if available)

2. PACKAGING START DATE:	3. PACKAGING END DATE:	4. INCHES FREEBOARD/HEADSPACE
5. CONTAINER NUMBER:	6. CONTAINER TYPE: ☐ S/L ☐ WM8 ☐ Drum ☐ OTHER, Specify:	
7. APPROVED BY: Supervisor(s) Signature/Date		8. ACCEPTED BY: WPM Signature/Date

GENERATOR TO MAKE DISTRIBUTION:

1	White	Waste Characterization
2	Blue	Low-Level Waste Handling and Disposal
3	Yellow	Materials Control and Accountability
4	Green	Waste Generator

Title: PACKAGING LOW-LEVEL RADIOACTIVE WASTE (LLRW) IN ISO CONTAINERS FOR SHIPMENT TO THE NEVADA TEST SITE *COMPLIANCE WITH THIS PROCEDURE IS MANDATORY WHILE PERFORMING THE ACTIVITIES WITHIN ITS SCOPE*	DOCUMENT NO: PT-0006 (SSOP-0078)	
	Date: 03-30-95	Revision No. 2
	Page 18 of 21	

ATTACHMENT C - MATERIALS EVALUATION AND CONTAINER INFORMATION - SCRAP VEHICLE

SECTION I - WASTE EVALUATION

	YES	NO	N/A
1. Free from the following fluids: a. Anti-freeze			
b. Brake fluid			
c. Gasoline			
e. Engine oil			
f. Power steering			
g. Differential fluid (rear end)			
h. Windshield Wiper Fluid			
2. Removed: a. Radios			
b. Distributor coils and amplifiers			
c. Alternators			
d. Electronic fuel injector circuit			
.. Fuel tank removed			
4. Propane tank removed			
5. Tires Deflated			
6. Tire valve stem removed			
7. Freon pumped/contained for recycling			
8. Auxiliary Hydraulic Unit removed or drained			
9. Oil filter and Gas filter removed and filter receptacles on engine sealed			
10. Batteries removed			
11. All Hoses that contain liquids have been cut and Drained			

SECTION II - CONTAINER INFORMATION

1. MATERIAL ORIGIN/DESCRIPTION (Provide a complete description of the waste in the container, including information on source or origin if available): _____

SPECIFIC DISCERNIBLE ITEMS APPROVED AS LLRW (NON-RCRA) BY WASTE CHARACTERIZATION: _____

WASTE CHARACTERIZATION SIGNATURE/DATE

2. PACKAGING START DATE: _____ PACKAGING FINISH DATE: _____	3. VERIFIED BY: _____ DATE: _____
4. CONTAINER NUMBER:	5. CONTAINER TYPE:
6. LOCATION PACKAGED:	
7. *MEF NUMBER:	8. INCHES FREEBOARD/HEADSPACE:
?PROVED BY: _____ SUPERVISOR(S) SIGNATURE/DATE	APPROVED BY: _____ QC SIGNATURE/DATE

For materials packaged that do not meet the criteria in Section I, but have an approved MEF number, record the MEF number and material packaged.

GENERATOR TO DISTRIBUTE

1	White	Waste Characterization	2	Blue	Low-level Waste Handling & Disposal	3	Yellow	Material Control & Accountability	4	Green	Waste Generator

FS-F-3472 (REV. 12/17/93)

ATTACHMENT D - FERNALD SITE CONTAINER REQUEST

Requisition No:

REQUESTED BY:				PHONE NUMBER	MAIL STOP	BADGE NUMBER	
PROJECT							
REQUEST DATE				CONTROL ACCOUNT NUMBER			
CONTAINER TYPE							
ISO	LWMB	SWMB	30 DRUM	55 DRUM	85 DRUM	110 DRUM	ROLL-OFF
QUANTITY REQUESTED							
TO BE SHIPPED TO NTS? YES___ NO__				FOR ONSITE STORAGE? YES___ NO___			
LOCATION FOR DELIVERY:							
CONTACT NAME:				PHONE:	RADIO:		
DELIVERY DATE REQUIRED:				MEF NUMBER			
MATERIAL DESCRIPTION/PWID							
DELIVERY DATE	QUANTITY			DELIVERY DATE	QUANTITY		
SIGNATURES REQUIRED							
CONTROL ACCOUNT MANAGER (REQUIRED)				DATE:			
COMMENTS:							

ATTACHMENT E - ISO LABELING LOCATIONS

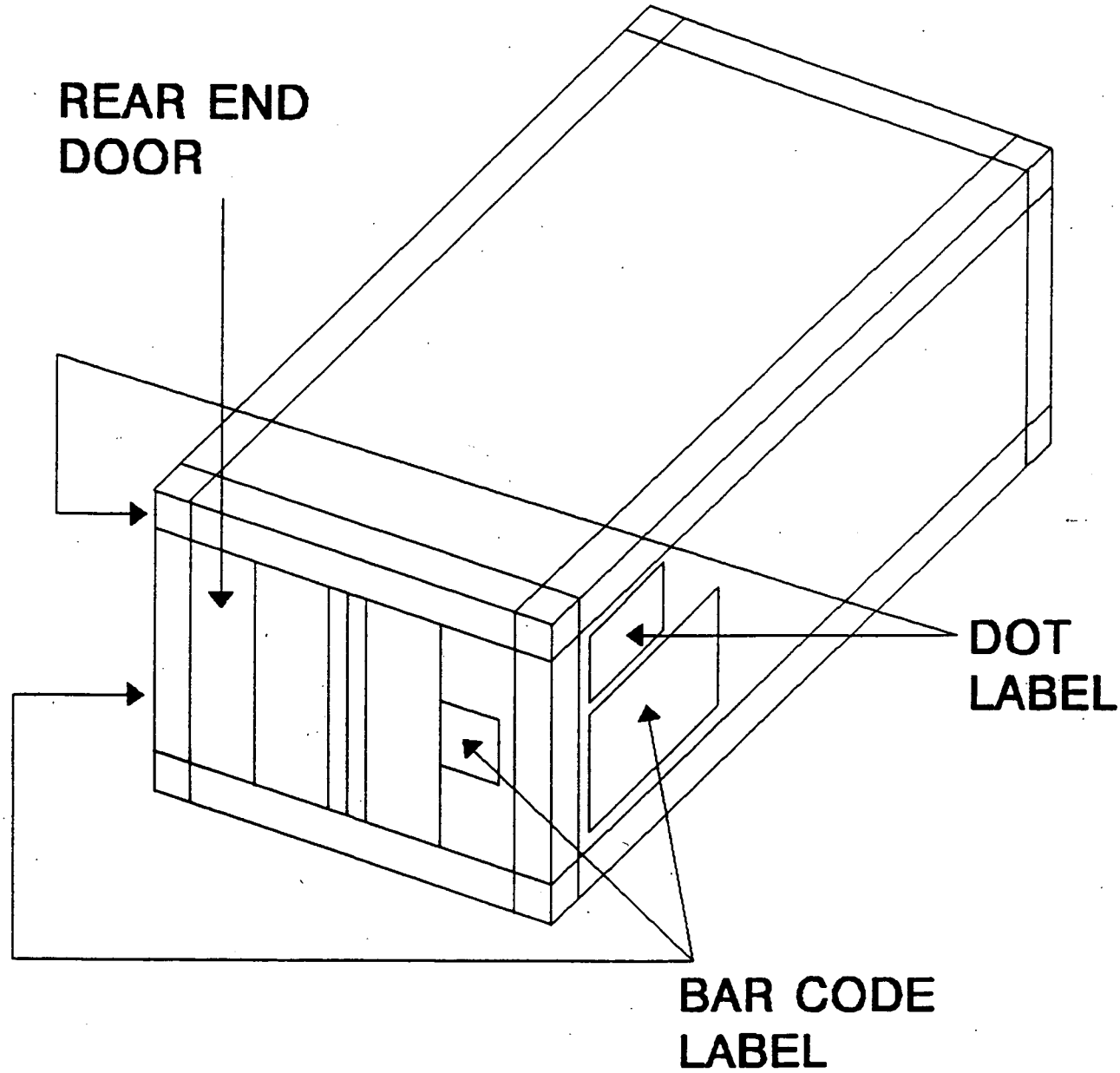

ATTACHMENT F - ITEM PRODUCTION/CERTIFICATION/IDENTIFICATION
FS-F-1945

CARD 65-1 ITEM PRODUCTION/CERTIFICATION/IDENTIFICATION

										DIV. NO.
P.O. NO.	SOURCE	CLASS	MATERIAL TYPE	LOT SEQUENCE NO.	DATE		SHIFT	BADGE NO.	CONT. NO.	SERIAL NO.
SEAL NUMBER		SEAL DATE		PACKAGE PHYSICAL CERTIFICATION			PLANT	PROD. MGR.	MGR.NO	
	MONTH	DAY	YEAR		YES	NO				
				EMPTY CONTAINER AT START			DCAR	SURV. NO.	GROSS WEIGHT	
WASTE DESCRIPTION AND COMMENTS				RUST HOLES OR DENTS						
				MATERIAL IS AS CODED						
PACKAGE TYPE				PROHIBITED MATERIALS						
PACKAGE SIZE				LIQUIDS IN CONTAINER					TARE WEIGHT	
PROJECT				MINIMUM OF VOID SPACE						
				PACKAGE SECURED						
				DRAIN PLUG SECURED						
				OVERPACK					NET WEIGHT	
				SPACE						

GENERATOR SIGNATURE SUPERVISOR SIGNATURE DATE

SB-S-1345-4 (REV.11/29/93)

6989

CONTROL NUMBER: _____
SITE PROCEDURE PT-0007 (SSOP-0079)
REVISION NO. 2

NON-CONTROLLED COPY

PACKAGING LOW-LEVEL RADIOACTIVE WASTE (LLRW) IN METAL BOXES FOR SHIPMENT TO THE NEVADA TEST SITE

Effective Date: 03-30-95

Originator (Subject Expert): Robert P Grieal 3/15/95
Date

Checker Concurrence: Robert A. [illegible] 3/16/95
Date

APPROVED BY: M West 3/16/95
Mike West, FAM of Packaging and Transportation
Date

FERNALD ENVIRONMENTAL MANAGEMENT PROJECT

Fernald Environmental Restoration Management Corporation
P. O. Box 538704
Cincinnati, Ohio 45253-8704

CONTROL NO. FER-041

6989

INTERIM CHANGE TO A SITE PROCEDURE (ICP)

DATE: April 18, 1995	PROCEDURE NO.: PT-0007	ICP NO.: ICP-003
PROCEDURE TITLE: Packaging LLRW in Metal Boxes for Off-Site Shipment		REV. NO.: 2
ICP TYPE: [x] PERMANENT [ ] TEMPORARY		EXPIRATION:

JUSTIFICATION: Reword to include plywood along with wood pallets.

AFFECTED PARAGRAPH(s): REPLACE STEP 7.3.6 ON PAGE 10 WITH THE FOLLOWING:

EXISTING REQUIREMENT(s):

7.3.6 . Place one layer of pallets (provided by LLW Packaging Support) in the bottom of the box.

CHANGE(s):

7.3.6 Place one layer of pallets (or its equivalent with concurrence by LLW Packaging Support) in the bottom of the box. (These materials are needed to prevent damage to the bottom and are dependent on the waste to be packaged and the method of packaging.)

SUBJECT EXPERT: Robert P Grimel

CHECKER: [illegible]

FUNCTIONAL AREA MANAGER: Robert A. Hunt

FUNCTIONAL AREA: WASTE [illegible] & TRANSPORTATION

OTHER AFFECTED FERMCO DIVISION(s): [x] YES [ ]

Construction

EFFECTIVE DATE: April 18, 1995

FS-F-4095 (02/09/95)

000602

CONTROL NO. FER-0411

6989

INTERIM CHANGE TO A SITE PROCEDURE (ICP)

DATE: April 18, 1995	PROCEDURE NO.: PT-0007	ICP NO.: ICP-005
PROCEDURE TITLE: Packaging LLRW in Metal Boxes for Off-Site Shipment		REV. NO.: 2
ICP TYPE: [x] PERMANENT [ ] TEMPORARY		EXPIRATION:
JUSTIFICATION: Clarify wording		
AFFECTED PARAGRAPH(s): REPLACE STEP 7.2.14 ON PAGES 8 AND 9 WITH THE FOLLOWING:		

EXISTING REQUIREMENT(s):

7.2.14 Do one of the following:

a. For concrete or materials with sharp edges, do one of the following:

(1) Place one layer of pallets (provided by LLW Packaging Support) in the bottom of the box and then pour 1/2 to 1 inch of diatomaceous earth evenly over the pallets.

OR

(2) Place one layer of absorbent material in the bottom of the box and cover with one layer of pallets.

OR

b. If loading soil, wood, or drummed materials, place one layer of absorbent pads in the bottom of the box and pour 1 to 2 inches of diatomaceous earth evenly in the bottom of the box.

NOTE: Pallets are not required when loading soil, wood or drummed materials.

CHANGE(s):

7.2.14 Determine if the waste form has the potential for damaging the container (i.e., dents and/or punctures) during loading. If yes, provide protection to the container bottom before loading waste.

NOTE: Packaging protection is required when loading broken concrete or large pieces of metal or equipment with sharp edges that could puncture the container bottom. Package protection is not required when loading less dense materials such as soil, wood, or drummed materials.

NOTE: Package protection can be achieved by using soft material such as wood pallets or plywood to cushion the waste from coming in contact with and damaging the container floor. Careful handling of the waste while loading the container is also acceptable. Compliance with this requirement is demonstrated by the absence of dents and punctures in the final package.

7.2.15 Place, at a minimum, one layer of absorbent pads per box or pour 1 to 2 inches of diatomaceous earth evenly over the bottom of the box. Add additional absorbent material or alternative absorbents when directed by the task order or other work plans controlling the packaging operation.

NOTE: When packaging material with a high moisture content (e.g., sump cakes), additional absorbent material is required. The amount of absorbent will be based on the potential free liquid in the waste. This potential free liquid estimate must be carefully considered in order to adequately determine the volume of absorbent required to contain the liquid.

SUBJECT EXPERT: Robert P Gieul	CHECKER: [illegible]

FUNCTIONAL AREA MANAGER: [illegible]

FUNCTIONAL AREA: Packaging and Transportation

OTHER AFFECTED FERMCO DIVISION(s): [x] YES [ ]

Construction

EFFECTIVE DATE: April 18, 1995

FS-F-4095 (02/09/95)

Title: **PACKAGING LOW-LEVEL RADIOACTIVE WASTE (LLRW) IN METAL BOXES FOR SHIPMENT TO THE NEVADA TEST SITE** *COMPLIANCE WITH THIS PROCEDURE IS MANDATORY WHILE PERFORMING THE ACTIVITIES WITHIN ITS SCOPE*	DOCUMENT NO: PT-0007 (SSOP-0079)	
	Date: 03-30-95	Revision No. 2
	Page 1 of 24	

TABLE OF CONTENTS

SECTION	TITLE	PAGE
1.0	PURPOSE	3
2.0	SCOPE	3
3.0	REFERENCES	3
4.0	RESPONSIBILITIES	3
5.0	GENERAL	4
6.0	PREREQUISITES	5
7.0	PROCEDURE	6
7.1	INSPECTING WASTE	6
7.2	PREPARING AN EMPTY, SMALL METAL BOX	7
7.3	PREPARING AN EMPTY, TOP-LOADING METAL BOX	9
7.4	FILLING THE BOX WITH WASTE MATERIAL	10
7.5	WEIGHING THE FILLED BOX	11
8.0	DRIVERS	13
9.0	DEFINITIONS	13

LIST OF TABLES

TABLE 1 - CORROSION INSPECTION TYPES 14
TABLE 2 - LEAKER INSPECTION TYPES 15
TABLE 3 - DENT/BULGE INSPECTION TYPES 16
TABLE 4 - WEIGHT AND FREEBOARD LIMITATIONS 17

LIST OF ATTACHMENTS

ATTACHMENT A - PROHIBITED MATERIALS 18
ATTACHMENT B - PROCESS AREA SCRAP CHECKLIST 19
ATTACHMENT C - MATERIALS EVALUATION AND CONTAINER INFORMATION - SCRAP VEHICLE 20
ATTACHMENT D - FERNALD SITE CONTAINER REQUEST 21
ATTACHMENT E - TOP-LOADING BOX LABELING 22
ATTACHMENT F - LLRW BOX LABELING 23
ATTACHMENT G - ITEM PRODUCTION/CERTIFICATION/IDENTIFICATION 24

ISSUE AND REVISION SUMMARY

Revision	Date	Description of Issue or Revision
0	12-14-92	Separate procedure written for packaging LLRW in boxes per Request No. S92-176, initiated by M. Hundley. SSOP-0079, SSOP-0078, and SSOP-0075 replace SSOP-0024.
1	10-04-04	Major revision required to update tables, Figure 3, and organization names and add labeling requirement per Request No. S93-073, initiated by Lori Hurst. This revision supersedes SSOP-0079, dated 12-14-92, Rev. 0.
2	03-30-95	Major Revision to omit the labeling, marking, and inspecting sections; add requirements for top-loading boxes; add requirements for packaging regulated asbestos containing materials; and outline the latest responsibility changes per Request No. S94-174, initiated by B. Giessl. This document replaces SSOP-0079, dated 10-04-94, Rev. 1.

1.0 PURPOSE

1.1 This procedure provides the instructions for packaging low-level radioactive waste (LLRW) in metal boxes for shipment offsite from the Fernald Environmental Management Project (FEMP).

2.0 SCOPE

2.1 The procedure outlines the steps for (1) inspecting the waste to be packaged, (2) inspecting and preparing empty boxes, (3) filling boxes with waste, (4) weighing filled boxes, and (5) securing the boxes.

2.2 The packaging operation is applicable to FEMP personnel (including subcontractors) responsible for packaging LLRW in metal boxes at any packaging location of the FEMP site.

3.0 REFERENCES

3.1 EW-0001, Completing the Material Evaluation Form

3.2 EW-0006, Management of Excess Soil, Debris, and Waste from a Project

3.3 PT-0003, Control and Movement of Containers at the FEMP

3.4 PT-0011, Evaluating Low-level Radioactive Waste (LLRW) Bulk Waste Streams for Shipment

3.5 MCA-I-018, Completing the Item Production/Certification/Identification Form

4.0 RESPONSIBILITIES

4.1 Packager inspects waste and containers and packages waste per this procedure. Complies with any additional requirements specified by Safety and Health (S&H).

4.2 LLW Packaging Support ensures the box is empty and in acceptable condition before packaging. Ensures contents of waste package. Coordinates the movement of containers.

4.3 Waste Characterization (WC) provides documentation supporting characterization of all LLRW packaged under this procedure.

4.4 Materials Control and Accountability (MC&A) provides bar code labels. Maintains records and inventory of metal boxes. Tracks movement of empty and full containers.

4.5 Safety and Health (S&H) provides a Radiological Control Technician (RCT), as requested. Determines appropriate respiratory equipment and any other employee protection.

4.6 Supervisor of the Waste Generation Area specifies applicable scale procedures and standard tare weight of packages. Ensures packaging materials are available for Packagers. Ensures that only trained personnel package waste material. Ensures that personnel who package waste for shipment follow applicable Nevada Test Site (NTS) criteria and Department of Transportation (DOT) and Environmental Protection Agency (EPA) regulations. Contacts Safety and Health (S&H) to determine the appropriate respiratory protection for the process being performed and the radiological surveys required for materials moving in and out of contamination areas. Contacts Radiological Control (RC) for a Radiological Work Permit (RWP) or other safety permits and ensures permits are obtained and signed prior to performing. Provides packagers with the required respiratory protection and other personal protective equipment. Ensures the lid on an unfilled box is secured after packaging so unknown materials are not added. Ensures waste packages are weather-protected.

4.7 Motor Vehicle Operator (MVO) delivers empty boxes to designated packaging location. Supports packager as needed per this procedure.

4.8 Performance/Quality Assurance (P/QA) overviews packaging operation to ensure compliance with this procedure.

5.0 GENERAL

5.1 Any circumstance that could have resulted in an intake of radioactive materials by inhalation, ingestion, or absorption shall be immediately reported to a supervisor. The supervisor shall immediately report the circumstance of possible radioactive materials intake to the S&H RC Department for evaluation. When the suspect isotope is uranium, the involved employees shall report to the Urine Sampling Station at the end of their respective shift to complete an FS-F-1458, "Investigation Report" (IR), and submit an incident urine sample. The involved employees shall also report to the Urine Sampling Station at the start of their next shift to submit a follow-up urine sample. When the suspect isotope is other than uranium, the involved employee(s) shall report to the Dosimetry Section of RC for further determination of actions. Employees are responsible for complying with appropriate requirements as specified by the authorized S&H staff.

5.2 For Waste Stream ONL0000000002 Contaminated Construction/Removal, the following substitutions should be made:

- WC may be performed using EW-0006, "Management of Excess Soil, Debris, and Waste from a Project."
- A Packager could be a subcontractor or FEMP personnel.
- A Supervisor could be the Construction Coordinator if a project is subcontracted.

5.3 DOT label letters shall be 2 inches high by 1/4 inch wide.

6.0 PREREQUISITES

6.1 Safety glasses with side shields shall be worn unless other eye protection is specified.

6.2 Respiratory protection provided by the supervisor shall be worn when required.

6.3 Gloves shall be worn when handling boxes, operating equipment, and handling rough, sharp-edged, or contaminated material.

6.4 Neoprene rubber gloves shall be worn when handling hazardous chemical substances where skin contact is possible.

6.5 Vacuum cleaners with HEPA type filters or a current DOP test label properly affixed to vacuum shall be used for cleaning.

6.6 An RWP must be approved and current.

6.7 Face shields shall be worn when removing lids or bungs of containers filled with liquids or during operations where personnel could be splashed with liquids.

6.8 Containers with unknown contents shall be labelled "UNKNOWN" (with the current date). Empty containers shall be marked "EMPTY."

6.9 Access to the container storage area will be secured and the container will be labeled as required in 40 CFR 61.149 (c) (5) (iii) and 40 CFR 61.149 (d) (1) (i), (ii), and (iii) when packaging Regulated Asbestos Containing Materials (RACMs).

6.10 Obtain the following materials and tools, as needed, before packaging:

- Appropriate safety protective equipment
- Foam-strip gasket (size appropriate for box)
- Diatomaceous earth
- Indelible marker
- Black paint, red paint, white paint (as applicable)
- Hammer and screw driver, as applicable
- Wrench and channel locks, as applicable
- Clear lab label tape and dispenser
- Clean rags
- Electric drill
- Impact wrench
- Absorbent pads

6.11 "Prohibited Materials" list (Attachment A) shall be displayed in the packaging area or on the container.

6.12 The "Process Area Scrap Checklist" (Attachment B) shall be displayed in the packaging area or on the container when packaging Waste Stream ONL0000000001 Process Area Scrap.

6.13 An FS-F-3252, "Material Evaluation Form (MEF)," shall be completed to determine if the waste is RCRA or non-RCRA. The packaging operation may not be started before the characterization is completed and an MEF is assigned by WC in accordance with EW-0001.

6.14 A minimum of two personnel are required to package waste.

6.15 Packagers shall be qualified in use of Personal Protective Equipment (PPE).

6.16 Employees shall be briefed on and sign the RWP in black ink before performing work.

7.0 PROCEDURE

7.1 INSPECTING WASTE

Packager

7.1.1 Ensure the waste to be packaged is not on the "Prohibited Materials" list (Attachment A) and can pass either the "Process Area Scrap Checklist" (Attachment B) or the "Material Evaluation and Container Information - Scrap Vehicle" (Attachment C), when applicable.

a. If the waste is on the Prohibited Materials List or does not pass the "Process Area Scrap Checklist" or the "Material Evaluation and Container Information - Scrap Vehicle," notify supervisor for disposition before continuing procedure.

OR

b. If the waste is not on the Prohibited Materials List and passes either the "Process Area Scrap Checklist" or the "Material Evaluation and Container Information - Scrap Vehicle," continue procedure.

NOTE: The determination to package a waste stream is based on a completed MEF.

7.1.2 Ensure the waste characterization has been completed and an MEF has been obtained from WC.

a. If the waste characterization has been completed, package it per this procedure.

OR

b. If the waste characterization has not been completed, inform Supervisor to contact WC for disposition before continuing procedure.

7.1.3 Visually check waste for free liquid (including ice).

a. If free liquid is present, notify supervisor for disposition before continuing procedure.

OR

b. If free liquid is not present, continue procedure.

Performance/Quality Assurance

7.1.4 Perform periodic surveillance of waste per applicable department procedure.

7.2 PREPARING AN EMPTY, SMALL METAL BOX

Waste Generator

7.2.1 Notify Container Distribution Facility (CDF) when containers are needed. Include an FS-F-3468, "Fernald Site Container Request" (Attachment D), signed by the Control Account Manager (CAM).

Container Distribution

7.2.2 Visually inspect container following PT-0003 before distributing.

LLW Packaging Support

7.2.3 Request container transfer to the waste loading site.

7.2.4 Verify that the interior of the box is empty and there is no interior or exterior damage such as corrosion, leaks, and dents/bulges per Tables 1, 2, and 3.

a. If the box is damaged or material is present, inform supervisor to contact the CDF for disposition before continuing procedure.

OR

b. If the box is not damaged and material is not present, continue procedure.

7.2.5 Verify the box has an inventory number on a bar code on the side of the box (Attachment E).

7.2.6 If the bottom of the box has a drain plug, ensure plug is securely in place.

Supervisor

7.2.7 Specify the scale for weighing and method of transporting the box to the scale.

NOTE: The scale shall be a currently calibrated accountability scale.

Packager

7.2.8 Inspect the scale to be used per the scale procedure applicable to the area.

Motor Vehicle Operator/Packager

7.2.9 As directed, move the box onto the scale.

NOTE: **Packagers may move any container within the capacity of a forklift; Motor Vehicle Operators shall move anything greater than the capacity of a forklift.**

Packager

7.2.10 Tare weigh box per the scale procedure applicable to the area.

7.2.11 Record the weight of the box on the upper front side of the box with indelible ink or paint so that it can be covered by the bar code.

Motor Vehicle Operator/Packager

7.2.12 Remove the box from the scale.

Packager

7.2.13 Remove lid and place in a designated location to prevent damage.

7.2.14 Do one of the following:

a. For concrete or materials with sharp edges, do one of the following:

(1) Place one layer of pallets (provided by LLW Packaging Support) in the bottom of the box and then pour 1/2 to 1 inch of diatomaceous earth evenly over the pallets.

OR

(2) Place one layer of absorbent material in the bottom of the box and cover with one layer of pallets.

OR

b. If loading soil, wood, or drummed materials, place one layer of absorbent pads in the bottom of the box and pour 1 to 2 inches of diatomaceous earth evenly in the bottom of the box.

NOTE: Pallets are not required when loading soil, wood or drummed materials.

7.3 PREPARING AN EMPTY, TOP-LOADING METAL BOX

Waste Generator

7.3.1 Notify Container Distribution Facility (CDF) when containers are needed. Include an FS-F-3468, "FEMP Container Request," signed by the Control Account Manager (CAM).

Container Distribution Facility

7.3.2 Visually inspect container following PT-0003 before distributing.

LLW Packaging Support

7.3.3 Request container transfer to the waste loading site.

7.3.4 Verify that the interior of the box is empty and there is no interior or exterior damage such as corrosion, leaks, and dents/bulges per Tables 1, 2, and 3.

a. If the box is damaged or material is present, inform supervisor to contact the CDF for disposition before continuing procedure.

OR

b. If the box is not damaged and material is not present, continue procedure.

7.3.5 Verify the box has an inventory number on a bar code on the side of the box (Attachment F).

Packager

7.3.6 Place one layer of pallets (provided by LLW Packaging Support) in the bottom of the box.

7.3.7 Place one layer of absorbent material in the bottom of the box.

Supervisor

7.3.8 Notify P/QA that the container has been prepared.

Performance/Quality Assurance

7.3.9 Inspect container preparation per applicable department procedure for compliance with this procedure.

NOTE: Only periodic inspections of container preparation are required for areas pre-approved by P/QA.

7.4 FILLING THE BOX WITH WASTE MATERIAL

Performance/Quality Assurance

7.4.1 Overview filling of boxes per applicable department procedure to ensure compliance with this procedure.

Packager

WARNING

A RESPIRATOR AND OTHER PERSONAL PROTECTIVE EQUIPMENT, SPECIFIED IN THE HEALTH AND SAFETY PLAN AND PROVIDED BY THE SUPERVISOR, SHALL BE DONNED PRIOR TO FILLING CONTAINERS TO PREVENT INHALATIONS AND EXPOSURES.

NOTE: Any waste encountered in the packaging operation not covered by the MEF or that does not meet either the "Process Area Scrap Checklist" or Material Evaluation and Container Information - Scrap Vehicle" requirements shall be set aside and shall not be packaged without the Supervisor contacting WC for disposition instructions.

7.4.2 Load waste into box as tightly as possible ensuring the box is within the specified weight and freeboard limitations (see Table 4) and the load is balanced to prevent tipping. Aggregate material shall be carefully loaded to minimize damage, settling, and shifting during transportation.

NOTE: To allow for ice build-up in winter, maximum weight for shipments is 40,000 pounds if shipped between November and March and 42,000 pounds if shipped between April and October.

7.4.3 Using a clean rag, wipe top edge of box. Place rag in disposal container.

7.4.4 Peel protective paper from foam-strip gasket and carefully apply gasket to box edge and/or the underside channel of the lid.

7.4.5 Place lid on box and secure as directed by supervisor.

7.4.6 Complete either a "Materials Evaluation and Container Information - Scrap Vehicle" form (Attachment C) or a "Process Area Scrap Checklist" (Attachment B) per PT-0011.

7.4.7 Complete a Form FS-F-1945, "Item Production/Certification/Identification," 65 Card (Attachment G) for each box following MCA-I-018, "Completing the Item Production/Certification/Identification Form."

NOTE: Tare weight for the large top-loaders is embossed in the top corner of the box.

LLW PACKAGING SUPPORT

7.4.8 Apply tamper-proof red seal to container.

7.4.9 Notify supervisor that the box is ready to be weighed.

7.5 WEIGHING THE FILLED BOX

Supervisor

7.5.1 Specify the scale and the method of transporting the box to the scale.

Packager

7.5.2 Inspect the scale to be used per the applicable scale procedure.

Motor Vehicle Operator

7.5.3 Move the box onto the scale.

Packager

7.5.4 Using the applicable scale procedure, weigh the box including box pins and other hardware to obtain gross weight.

a. If the box is over the specified weight limit (see Table 4), notify supervisor for disposition.

OR

b. If the box is within weight limit, continue procedure.

7.5.5 Do one of the following:

a. For a box requiring temporary storage, do the following:

(1) Apply a tamper-proof seal, lock, and other device to secure lid and prevent unauthorized additions.

LLW Packaging Support

(2) Notify MC&A and Transportation that container is full and ready to be moved.

OR

b. For a box not requiring temporary storage, continue procedure.

Packager

7.5.6 Using indelible ink, mark the gross weight, shipping number, and serial number on the upper front side of the box so the markings can be covered by the bar code label when provided.

7.5.7 Remove box from scale.

7.5.8 Record the weight on the 65 Card.

7.5.9 Send 65 Card and any applicable form(s) to supervisor.

Supervisor

7.5.10 Sign 65 Card indicating accuracy and completeness.

7.5.11 Complete and sign the appropriate form(s).

7.5.12 Forward 65 Card and the appropriate form(s) to LLW Packaging Support.

LLW Packaging Support

7.5.13 Review, sign, and distribute the 65 Card and the appropriate form(s).

Materials Control & Accountability/Shipment Coordinator

7.5.14 Print required bar code labels and submit to supervisor.

8.0 DRIVERS

8.1 NVO-325, "Nevada Test Site Defense Waste Acceptance Criteria, Certification, and Transfer Requirements"

8.2 S/RID 12, Packaging & Transportation

8.3 49 CFR, Section 173

9.0 DEFINITIONS

Free Liquid - Any free flowing liquid or liquid that readily separates from the solid portion of a waste under ambient temperature and pressure conditions. Ice is also considered a free liquid.

Freeboard - The amount of allowable void space between packaged materials and the lid of the box.

Low-Level Radioactive Waste (LLRW) - All radioactive waste not classified as high-level waste, spent nuclear fuel, Transuranic (TRU) waste, uranium mill tailings, or Mixed Waste (MW).

Resource Conservation and Recovery Act (RCRA) - The Congressional Act which established safe and environmentally acceptable management practices for specific wastes. RCRA requires strict "cradle to grave" control, documentation, and proper management of hazardous wastes.

White Metal Boxes (WMB) - Bulk containers with a net capacity greater than 452 liters and less than 3,000 liters that meet HM-181 test standards. (See Table 4 for specification of each type.)

TABLE 1
CORROSION INSPECTION TYPES

TYPE	CHARACTERISTIC	COULD CAUSE LOSS OF BOX INTEGRITY		CORRECTIVE ACTION
		YES	NO	
1	Holes, large dents, or large areas of corrosion that affect the structural integrity of the container or require the entire drum to be painted	X		1. Notify Maintenance to patch. Overpack or repackage in another container. **NOTE**: Supervisors ensure that touchup or painting is completed. 2. Notify P/QA and MC&A of all repairs or repackaging of waste containers.
2	Heavy rust with areas of pitted metal flaking and no holes present		X	1. HAZWATS scrape loose oxides and paint the area to be repaired.
3	Light surface rust with no pitting of the base metal		X	1. Wipe with masoline cloth or wash with soap and water, if needed to remove dirt. 2. Ship as is.

TABLE 2
LEAKER INSPECTION TYPES

TYPE	CHARACTERISTIC	CORRECTIVE ACTION
1	Material flowing from container and accumulation on, under, or around container	1. Notify supervisor and Radiological Control (RC). 2. Supervisor notifies AEDO. 3. Stop or contain leak at the discretion of the supervisor. 4. Record on inspection form that the container requires mitigation within 24 hours. 5. Complete additional cleanup as necessary. 6. Supervisor initiate an Occurrence Report (OR).
2	Material on container exterior only; no material on, under, or around container	1. Record leak on inspection form. 2. Notify Supervisor and RC. 3. Supervisor shall initiate an OR. 4. Supervisor shall review the completed inspection forms to prioritize containers for transfer to overpack staging area and subsequent mitigation.
3	Container exterior discolored/visible contamination; no material release	1. Record condition on inspection form. 2. Notify Supervisor and RC. 3. Supervisor schedule container for overpacking.

TABLE 3
DENT/BULGE INSPECTION TYPES

TYPE	CHARACTERISTIC	CORRECTIVE ACTION
1	Dents and/or bulges affecting container integrity to the degree of potential or actual release	Overpack or transfer to new container.
2	Dents and/or bulges not affecting container integrity	Continue to monitor.

TABLE 4
WEIGHT AND FREEBOARD LIMITATIONS

CODE	SHIPPING CONTAINERS	TARE WT (LBS)	WT LIMIT (LBS)
113	WMB - Pin Type No. 30A-5500-M-00059, Rev. 0 43"H x 53"W x 77"L Exterior 38"H x 52"W x 76"L Interior	630	6000 or no more than 3" freeboard
117	WMB - Clip Type Electropanel No. 89DW000800, Rev. 1 41"H x 54"W x 78"L Exterior 37"H x 48"W x 72"L Interior	680	6000 or no more than 3" freeboard
119	WMB - Bolt Type No. C01-542-2-01 40.5"H x 57.25"W x 81.25"L Ext 32"H x 52"W x 76"L Interior	850	8000 or no more than 3" freeboard
117	WMB - Bolt Type (Carolina) No. PT188-93 42"H x 55"W x 80"L Exterior 37"H x 50"W x 75"L Interior	~900	8000 or no more than 3" freeboard
117	WMB - Bolt Type (Galbreath) No. IS1503 41 13/16"H x 55.5"W x 80"L Ext 37"H x 51.5"W x 74.5"L Interior	~900	8000 or no more than 3" freeboard
120	Top Load No. 40X-5500-M-00041, Rev. 1 89"H x 96"W x 240"L Exterior	VARIED	42,000 or full
121	Top Load No. 94"H x 96"W x 240"L Exterior 88"H x 92"W x 236"L Interior	VARIED	42,000 or full

ATTACHMENT A - PROHIBITED MATERIALS

PACKAGING GUIDELINES FOR WASTE GENERATOR	
Package has been properly prepared for closing when the following conditions exist:	
No liquids of any kind have been placed in container.	
Heavy/bulky items have been secured within container.	
All available space has been utilized efficiently.	
Prohibited materials (listed below) have been excluded.	
Packaging has not been damaged during loading.	
Liner is in place and properly lapped and sealed.	
PROHIBITED MATERIALS AND EXAMPLES	
Compressed Gases	*Corrosive Materials*
unpuctured aerosol cans	*acid or caustic material*
gas cylinders with valves or plugs in place	*acidic*
Free Liquids	*Hazardous Waste*
water, ice, seepage, condensation,	*solvents, petroleum products,*
drinks, coffee, juices, pop, soaked rags,	*lead, mercury, batteries,*
fuel, oil, fluids, solvents, etc.	*pesticides, etc.*
Etiologic Agents	*Explosives*
medical waste	

ATTACHMENT B - PROCESS AREA SCRAP CHECKLIST

SECTION I - WASTE EVALUATION	Yes	No	N/A
1.0 Free Liquids: 1.1 Any free liquids entrapped in nooks, crannies, or folds? 1.2 Did the item contain internal (working) fluids? 1.3 Have internal fluids been drained? 1.4 Has item been tagged "drained?"			
2.0 Electrical Equipment: 2.1 Any light ballasts on the item? 2.2 Any starter caps on the item? 2.3 Any mercury switches on the item? 2.4 Any capacitors bigger than 5 inches in diameter on the item?			
3.0 Excess Residues: 3.1 Any residues on item that could be removed and managed separately? 3.2 Any soils on item that could be removed and managed separately?			
4.0 Painted Material: 4.1 Metal item < 1/8" thick AND more than 10% painted w/ lead-based paint? 4.2 Wood item < 1" thick AND more than 10% painted w/ lead-based paint?			
5.0 Restrictions on Material Type: 5.1 Is the material itself made of lead (Pb)? 5.2 Is the material itself uranium (U) or thorium (Th) metal?			
6.0 Glass: 6.1 Any light bulbs or lamps other than incandescent? 6.2 If sample jars, any material remaining in container?			
7.0 Trash: 7.1 Are there any prohibited items as listed in the posted "prohibited items" list?			
8.0 Property: 8.1 Has all property been administratively processed for disposal as LLW?			

SECTION II - CONTAINER INFORMATION

1. MATERIAL ORIGIN/DESCRIPTION (Provide a detailed description of the materials in the container, including source or origin if available)

2. PACKAGING START DATE:	3. PACKAGING END DATE:	4. INCHES FREEBOARD/HEADSPACE
5. CONTAINER NUMBER:	6. CONTAINER TYPE: ☐ S/L ☐ WMB ☐ Drum ☐ OTHER, Specify:	
7. APPROVED BY: Supervisor(s) Signature/Date		8. ACCEPTED BY: WPM Signature/Date

GENERATOR TO MAKE DISTRIBUTION:		
1	White	Waste Characterization
2	Blue	Low-Level Waste Handling and Disposal
3	Yellow	Materials Control and Accountability
4	Green	Waste Generator

ATTACHMENT C - MATERIALS EVALUATION AND CONTAINER INFORMATION - SCRAP VEHICLE

SECTION I - WASTE EVALUATION

	YES	NO	N/A
1. Free from the following fluids: a. Anti-freeze			
b. Brake fluid			
c. Gasoline			
e. Engine oil			
f. Power steering			
g. Differential fluid (rear end)			
h. Windshield Wiper Fluid			
2. Removed: a. Radios			
b. Distributor coils and amplifiers			
c. Alternators			
d. Electronic fuel injector circuit			
uel tank removed			
4. Propane tank removed			
5. Tires Deflated			
6. Tire valve stem removed			
7. Freon pumped/contained for recycling			
8. Auxiliary Hydraulic Unit removed or drained			
9. Oil filter and Gas filter removed and filter receptacles on engine sealed			
10. Batteries removed			
11. All hoses that contain liquids have been cut and drained			

SECTION II - CONTAINER INFORMATION

1. MATERIAL ORIGIN/DESCRIPTION (Provide a complete description of the waste in the container, including information on source or origin if available): _____

SPECIFIC DISCERNIBLE ITEMS APPROVED AS LLRW (NON-RCRA) BY WASTE CHARACTERIZATION: _____

WASTE CHARACTERIZATION SIGNATURE/DATE

2. PACKAGING START DATE: _____ PACKAGING FINISH DATE: _____	3. VERIFIED BY: _____ DATE: _____
4. CONTAINER NUMBER:	5. CONTAINER TYPE:
6. LOCATION PACKAGED:	
7. *MEF NUMBER:	8. INCHES FREEBOARD/HEADSPACE:
VED BY: _____ SUPERVISOR(S) SIGNATURE/DATE	APPROVED BY: _____ QC SIGNATURE/DATE

*Materials packaged that do not meet the criteria in Section I, but have an approved MEF number, record the MEF number and material packaged.

GENERATOR TO DISTRIBUTE

1	White	Waste Characterization	2	Blue	Low-level Waste Handling & Disposal	3	Yellow	Material Control & Accountability	4	Green	Waste Generator

FS-F-3472 (REV. 12/17/93)

ATTACHMENT D - FERNALD SITE CONTAINER REQUEST

Requisition No:

REQUESTED BY:				PHONE NUMBER	MAIL STOP	BADGE NUMBER	
PROJECT							
REQUEST DATE				CONTROL ACCOUNT NUMBER			
CONTAINER TYPE							
ISO	LWMB	SWMB	30 DRUM	55 DRUM	85 DRUM	110 DRUM	ROLL-OFF
QUANTITY REQUESTED							
TO BE SHIPPED TO NTS? YES___ NO__				FOR ONSITE STORAGE? YES___ NO___			
LOCATION FOR DELIVERY:							
CONTACT NAME:				PHONE:	RADIO:		
DELIVERY DATE REQUIRED:				MEF NUMBER			
MATERIAL DESCRIPTION/PWID							

DELIVERY DATE	QUANTITY	DELIVERY DATE	QUANTITY

SIGNATURES REQUIRED	
CONTROL ACCOUNT MANAGER (REQUIRED)	DATE:
COMMENTS:	

ATTACHMENT E - TOP-LOADING BOX LABELING

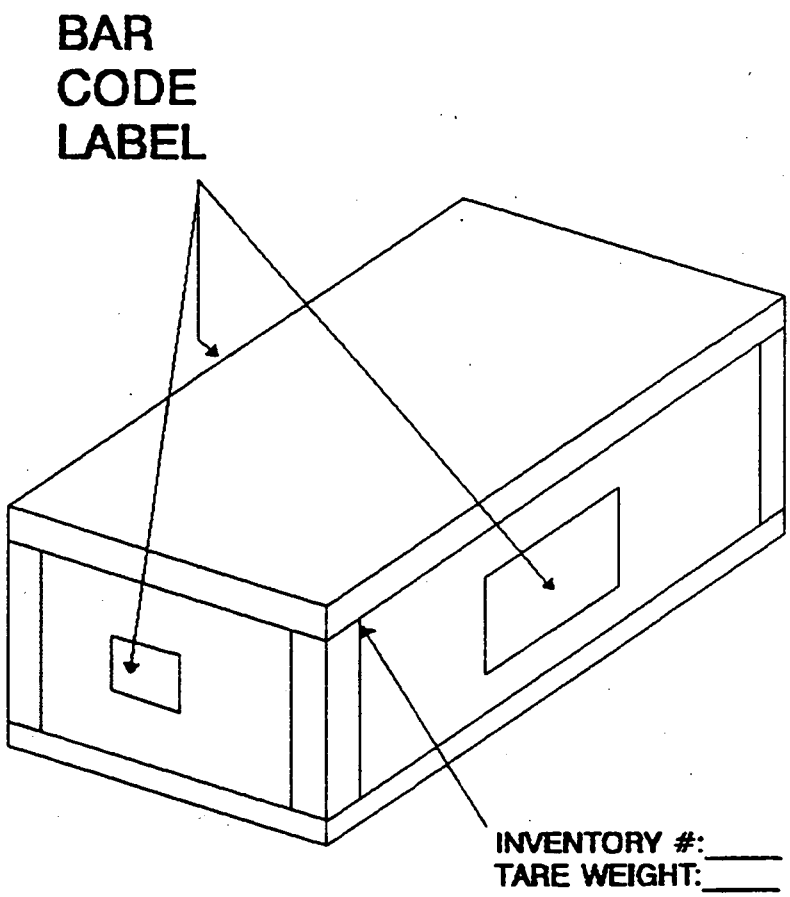

ATTACHMENT F - LLRW BOX LABELING

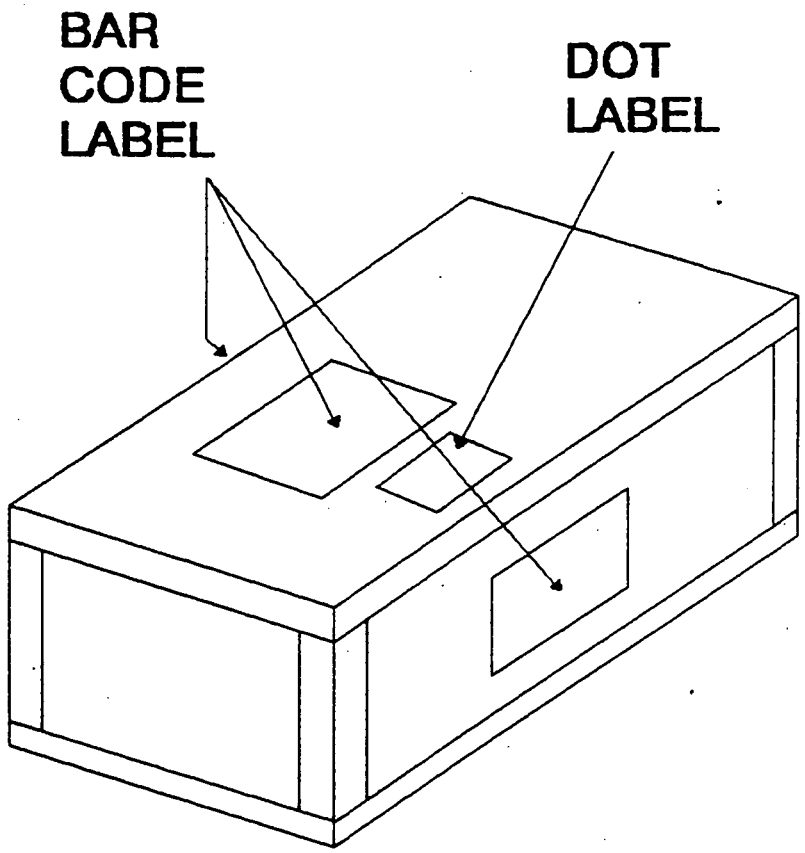

ATTACHMENT G - ITEM PRODUCTION/CERTIFICATION/IDENTIFICATION

CARD 65-1 ITEM PRODUCTION/CERTIFICATION/IDENTIFICATION

P.O. NO.	SOURCE	CLASS	MATERIAL TYPE	LOT SEQUENCE NO.	DATE		SHIFT	BADGE NO.	CONT. NO.	SERIAL NO.
SEAL NUMBER		SEAL DATE		PACKAGE PHYSICAL CERTIFICATION			PLANT	PROB. MGA	MEP.MD	
		MONTH	DAY	YEAR	YES	NO				
				EMPTY CONTAINER AT START			DCAS	SURV. NO.	GROSS WEIGHT	
WASTE DESCRIPTION AND COMMENTS				RUST HOLES OR DENTS						
				MATERIAL IS AS CODED						
PACKAGE TYPE				PROHIBITED MATERIALS						
PACKAGE SIZE				LIQUIDS IN CONTAINER					TARE WEIGHT	
PROJECT				MINIMUM OF VOID SPACE						
				PACKAGE SECURED						
				DRAIN PLUG SECURED						
				OVERPACK					NET WEIGHT	
				REPACK						

GENERATOR SIGNATURE

SUPERVISOR SIGNATURE DATE

70-9-2760-1 (REV.11/29/93)

6989
NON-CONTROLLED COPY

CONTROL NO. [redacted]
SITE PROCEDURE EW-0014 (SSOP-1027)
REVISION NO. 0

MANAGING PCBs AND PCB ITEMS

Effective Date: 03-08-94

Originator (Subject Expert): _____
Date

Checker Concurrence: _____
Date

APPROVED BY: _____ 2/15/95
Terence D. Hagen, Manager of Environmental Restoration and Waste Management
Date

FERNALD ENVIRONMENTAL MANAGEMENT PROJECT

Fernald Environmental Restoration Management Corporation
P. O. Box 538704
Cincinnati, Ohio 45253-8704

CONTROL NO. FER-0411 6989
SITE STANDARD OPERATING PROCEDURE
DOCUMENT NO. SSOP-1027
REVISION NO. 0

MANAGING PCBs AND PCB ITEMS

SSOP-1027

Effective Date: 03-08-94

AUTHORIZED BY: J. W. Thiesing, Executive Vice President 2/25/94 Date

FERNALD ENVIRONMENTAL MANAGEMENT PROJECT

Fernald Environmental Restoration Management Corporation
P. O. Box 398704
Cincinnati, Ohio 45239-8704

Fernald Environmental FERMCO Restoration Management Corporation	Title: **MANAGING PCBs AND PCB ITEMS**
	DOCUMENT NO: SSOP-1027 REVISION NO: 0
	Effective Date: 03-08-94 — Page 1 of 34

TABLE OF CONTENTS

SECTION	TITLE	PAGE
1.0	PURPOSE	3
2.0	SCOPE	3
3.0	DEFINITIONS	3
4.0	RESPONSIBILITIES	7
5.0	GENERAL	10
6.0	PREREQUISITES	10
6.1	INDUSTRIAL SAFETY AND HEALTH REQUIREMENTS	10
6.2	PERSONNEL REQUIREMENTS	10
6.3	TOOLS AND MATERIALS REQUIRED	10
7.0	PROCEDURE	10
7.1	SAMPLING AND ANALYSIS PLAN(S)	10
7.2	TRAINING	10
7.3	PREPARING PCB AND PCB ITEM CONTAINERS	11
7.4	PREPARING THE PROJECT AREA	11
7.5	REMOVING PCBS AND PCB ITEMS	13
7.6	REMOVING LEAKING PCB AND PCB ITEMS	14
7.7	LABELLING PCB DISPOSAL CONTAINERS	16
7.8	TRANSPORTING PCB CONTAINERS AND PCB ARTICLE CONTAINERS TO STORAGE	16
7.9	SAMPLING RESIDUES	22
7.10	MONTHLY INSPECTION OF THE PCB STORAGE FACILITY (BUILDING 81)	22
8.0	APPLICABLE DOCUMENTS	22
8.1	DRIVERS	22
8.2	REFERENCES	22

LIST OF FIGURES

FIGURE	TITLE	PAGE
1	SCHEMATIC OF PCB DISPOSAL DRUM LABELING	17
2	"CAUTION CONTAINS PCBS" MARK	18
3	DOT SHIPPING LABEL OR MARK FOR PCB CONTAINERS	19
4	PCB ARTICLE TAG - REMOVAL FROM SERVICE INFORMATION, FS-F-2818	21

LIST OF ATTACHMENTS

ATTACH	TITLE	PAGE
A	FERMCO PCB POLICY	23
B	DIELECTRIC FLUID TRADE NAMES AND MANUFACTURERS	34

RECORD OF ISSUE/REVISIONS

DATE	REV. NO	DESCRIPTION AND AUTHORITY
03-08-94	0	New document needed to describe the removal, management, marking, storage, labelling, and disposal of PCBs and PCB items, per Request S93-196, initiated by S. Kaster.

1.0 PURPOSE

This procedure provides instructions for managing Polychlorinated Biphenyls (PCBs) and PCB items at the Fernald Environmental Management Project (FEMP) pursuant to the Fernald Environmental Restoration Management Corporation (FERMCO) PCB policy (Attachment A).

2.0 SCOPE

This procedure applies to all personnel at the FEMP who are required to handle PCBs and PCB items as a result of pre-removal action activities, planned maintenance activities, construction and/or demolition projects, closures, and removal/response actions.

3.0 DEFINITIONS

Administrative Record - An organized collection of records open to public view, that documents FEMP compliance with the requirements set forth by the Comprehensive Environmental Response, Compensation and Liability Act (CERCLA).

Capacitor - A device for accumulating and holding a charge of electricity and consisting of conducting surfaces separated by a dielectric. Types of capacitors include:

- small capacitors that contain less than 1.36 kg (3 pounds) of dielectric fluid, or if fluid weight is unknown, it is a small capacitor if the volume is less than 100 cubic inches, or volume is between 1,639 and 3,278 cubic centimeters (100 to 200 cubic inches) and total capacitor weight is less than 4.08 kg (9 pounds).

- large capacitors that contain more than 3 pounds (1.36 kg) of dielectric fluid. If the capacitor operates at 2,000 volts or above, it is considered a high voltage large capacitor and if it operates at below 2,000 volts, it is a low voltage large capacitor.

Compatible Container - A container that meets Department of Transportation (DOT) specifications which is compatible with the characterized material.

Comprehensive Environmental Response, Compensation, and Liability Act (CERCLA) - The Act that mandates the development of organizational structure and procedures to respond to releases, or threats of release, of hazardous substances or pollutants/contaminants.

Fixed Contamination - Radioactive contamination that is not readily removable.

3.0 DEFINITIONS (cont.)

Hazardous Waste - Waste that is specifically listed as a hazardous waste and/or exhibits one or more of the hazardous waste characteristics (i.e., ignitability, corrosivity, reactivity, or toxicity) as defined in Chapter 3745-51 of the Ohio Administrative Code (OAC) and CFR 261.

Leak - Any instance where PCBs are on the exterior surface of PCB Articles, PCB Containers, or PCB Equipment.

Mark - The descriptive name, instructions, cautions, or other information applied to:

- PCB containers
- PCB transformers
- PCB large high voltage capacitors
- Equipment containing a PCB transformer or a PCB capacitor
- Electric motors using PCB hydraulic fluid
- Heat transfer systems using PCBs
- PCB article containers containing articles or equipment
- Each storage area used to store PCBs and PCB items
- Each transport vehicle if loaded with PCB containers that contain more than 45 kg (99.4 lbs) of PCBs in the liquid phase or with one or more PCB transformers.

MEF - Material Evaluation Form.

Mixed Waste - Waste containing both radioactive and hazardous components as defined by the Atomic Energy Act and RCRA, respectively.

One-Year Storage Limit - Any PCB article or container stored for disposal after January 1, 1983 shall be disposed of within 1 year from the date when first removed from service and placed in storage (this includes 9 months for storage and 3 months for actual disposal).

PCB and PCBs - Polychlorinated Biphenyls. A chemical substance that is limited to the biphenyl molecule that has been chlorinated to varying degrees; and is regulated under TSCA (40 CFR 761).

PCB Article - Any manufactured article, other than a PCB container, that contains PCBs and whose surface(s) has been in direct contact with PCBs. PCB articles include, but are not limited to, capacitors, transformers, electric motors, pumps, pipes, and other manufactured items.

PCB Article Container - Any package, drum, or other device that contains PCB articles or PCB equipment and whose surface(s) has not been in direct contact with PCBs.

PCB Container - Any package, drum, tank or other device that contains PCBs or PCB articles and whose surface(s) has been in direct contact with PCBs.

3.0 **DEFINITIONS** (cont.)

PCB-Contaminated Electrical Equipment - Any electrical equipment including, but not limited to, transformers, capacitors, circuit breakers, reclosers, voltage regulators, switches, electromagnets, and cable that contain 50 ppm or greater, but less than 500 ppm PCB. Oil-filled electrical equipment other than circuit breakers, reclosers, and cable whose PCB concentration is unknown must be assumed to be PCB-contaminated electrical equipment.

PCB Equipment - Any manufactured item, other than a PCB container or PCB article container, that contains a PCB article or other PCB equipment, and includes microwave ovens, electronic equipment, and fluorescent light ballasts and fixtures.

PCB Item - Any PCB article, PCB article container, PCB container, or PCB equipment that deliberately or unintentionally contains or has a part made of any PCB or PCBs.

PCB Transformer - Any transformer that contains 500 ppm PCB or greater.

PCB Waste - Those PCBs and PCB items that are subject to the disposal requirements under TSCA regulations (40 CFR 761).

Project - For the purpose of this procedure, a project is defined as any

- CERCLA removal/response action
- RCRA closure
- Construction project
- Demolition project
- Maintenance activity

ppm - Parts per million.

3.0 **DEFINITIONS** (cont.)

Radioactive Contaminated Waste - Solid, liquid, or gaseous material that contains radionuclides regulated under the Atomic Energy Act of 1954, and of negligible value considering costs of recovery. Surface contaminated materials with radiation value above DOE Order 5400.5 limits are considered radioactive waste. Surface contaminated materials include metals and other non-porous matrices where the radioactive contamination is limited to the surface of the material and where all surfaces of the material that could have been contaminated can be monitored. Volume contaminated materials that have added radioactivity from DOE activities are also considered radioactive waste. Volume contaminated materials include materials with porous matrices and other materials for which the radioactive contamination is not necessarily limited to the surface, or materials where all surfaces that could have been contaminated can not be monitored.

Removable Contamination - Radiological surface contamination that is readily removed using the filter paper smear technique.

Resource Conservation and Recovery Act (RCRA) - The act that mandates cradle-to-grave control of specified hazardous waste by imposing management requirements on generators, transporters and owners/operators of treatment, storage and disposal (TSD) facilities.

Soil - All vegetation, soils and other ground media including, but not limited to, sand, grass and gravel. Does not include concrete and asphalt.

SPCC Plan - Spill Prevention, Control and Countermeasures Plan

Spill - Both intentional and unintentional spills, leaks and other uncontrolled discharges where the release results in any quantity of PCBs running off, or about to run off, the external surface of the equipment or the PCB source, as well as the contamination resulting from those releases. This policy applies to spills of 50 ppm or greater of PCBs. The concentration of PCBs spilled is determined by the PCB concentration in the material spilled as opposed to the concentration of PCBs in the material onto which the PCBs were spilled.

Storage - PCBs and PCB items being stored that have been designated for disposal are required to meet the requirements specified in 40 CFR 751.60. The following PCB items may be stored temporarily for up to 30 days in an area that doesn't comply with the facility requirements of 40 CFR 761.65 provided that a notation is attached to the item of PCB container (containing the item) indicating the date the item was removed from service; non-leaking PCB Articles and PCB equipment; leaking PCB Articles and PCB equipment if placed in non-leaking PCB containers containing sufficient sorbent materials to absorb any liquid PCBs remaining in the PCB item; PCB containers containing non-leaking PCBs; and PCB containers containing between 50 ppm and 500 ppm.

3.0 **DEFINITIONS** (cont.)

Toxic Substances Control Act (TSCA) - A 1976 Congressional Act that authorizes the EPA to gather information on chemical risks. This act includes the regulation of PCBs.

4.0 **RESPONSIBILITIES**

CERCLA/RCRA Unit 3 provides overall project management and coordination with all support groups involved in managing PCBs and PCB items.

Remediation Support Operations (RSO)

- Coordinates with members of other departments to plan the removal of PCBs and PCB items.
- Maintains and controls access to PCB storage facilities.
- Coordinates the movement of PCB containers.
- Ensures that only trained personnel handle PCBs and PCB items.
- Prepares work orders for projects in which PCBs and PCB items are to be removed.
- Removes PCB items from service.
- Signs the Nuclear Material Transfer Record/Nuclear Material Receipt/Material Identification Record, 68/69 Card, prior to moving the PCBs and PCB items to storage.
- Completes PCB and PCB item identification documentation.
- Notifies the Assistant Emergency Duty Officer (AEDO) in the event of a spill and coordinates spill response activities in accordance with the Spill Prevention, Control and Countermeasures Plan.
- Assists in implementing training requirements for operators handling PCBs and PCB items.
- Receives PCB samples and prepares them for shipment to an offsite laboratory.
- Receives and handles PCB samples and residues from offsite laboratories.

4.0 **RESPONSIBILITIES** (cont.)

- At least monthly, performs inspections of the PCB storage facility (Building 81) to ensure container integrity.
- Provides documentation to identify storage containers that may be used for PCBs and PCB items.
- Prepares Sampling and Analysis Plans.
- Conducts sampling of PCBs and PCB items when requested.
- Identifies and provides storage, characterization, and disposal of PCBs and PCB items.

Regulatory Programs (RP)

- Identifies applicable regulations, DOE Orders, and FERMCO policies.
- Provides CERCLA/RCRA/TSCA integration guidelines.
- Assists departments as needed in the designation of storage areas for PCBs and PCB items for compatibility and storage requirements.
- Provides all departments with a FERMCO PCB policy.

Quality Assurance (QA)

- Monitors to ensure that provisions of the Site-wide Quality Assurance (SQA) Program are implemented.
- Monitors FEMP employees and subcontractors to ensure that all applicable procedures including health and safety requirements are followed.
- Performs surveillance of the site to ensure adherence to this procedure and issues Deviation Reports (DR) and/or Corrective Action Reports (CAR) when applicable.

Quality Control (QC)

- Performs or ensures that surveillance of the project area for the removal of PCB items is performed and that generation records are completed.
- Performs surveillance for the site to ensure adherence to this procedure and issues Deviation Reports (DR) and/or Corrective Action Reports (CAR) when applicable.

4.0 **RESPONSIBILITIES** (cont.)

- Ensures that Department of Transportation (DOT) markings on drums are consistent with the FERMCO PCB policy.

Waste Characterization

- Completes waste determinations through the use of the MEF.
- Revises MEFs when necessary.

Environmental Safety and Health (ES&H)

- Prepares work permits for applicable safety and personal protective equipment (PPE) to be worn for the removal of PCBs and PCB items.
- Performs preliminary surveys to assist in identifying the level of radiological contamination.
- Surveys and prepares radiological data records for PCBs and PCB items generated during a project.
- Monitors and segregates PCBs and PCB items requiring radiological decontamination according to type.
- Assists in establishment of training requirements for operators handling PCBs and PCB items.

Training Department

- Trains employees on the handling of PCB and PCB items.
- Trains employees on the implementation of this procedure.

Materials Control and Accountability (MC&A)

- Maintains a current TSCA Waste Inventory of PCBs and PCB items.
- Co-signs with RSO the Nuclear Materials Transfer, Nuclear Material Receipt/Material Identification Records (Cards 68/69)
- Assigns inventory numbers.
- Records movement of all TSCA Containers.
- Generates TSCA reports.

5.0 GENERAL

Work permits, work plans, or other project documentation shall be reviewed prior to commencement of the project. A meeting (when applicable and feasible) may be scheduled to discuss the project and an area walkdown may be necessary to review the project scope for PCBs and PCB item removal, and sampling and waste characterization. If sampling will be required, a Sampling and Analysis Plan (SAP) shall be prepared.

6.0 PREREQUISITES

6.1 INDUSTRIAL SAFETY AND HEALTH REQUIREMENTS

Personal protective equipment (PPE), such as eye protection, goggles, face shields, respiratory protection, gloves and rubber aprons shall be worn as specified in the work permit issued by ES&H.

6.2 PERSONNEL REQUIREMENTS

Employees shall have reviewed and be familiar with the information contained in the Material Safety Data Sheets (MSDS) for PCB dielectric fluids or the chemical and/or hazardous material being used.

6.3 TOOLS AND MATERIALS REQUIRED

None

7.0 PROCEDURE

NOTE: Within this section, Warnings and Cautions precede the step to which they apply. Notes follow the steps to which they apply.

7.1 SAMPLING AND ANALYSIS PLAN(S)

RSO

When necessary, prepare Sampling and Analysis Plan(s) in accordance with EM-SM-006.

7.2 TRAINING

TRAINING DEPARTMENT

1. Develop with the assistance of various appropriate support groups, a training program that incorporates the Sampling and Analysis Plan(s) and the directions contained in this document.

7.2 TRAINING (cont.)

TRAINING DEPARTMENT

2. In accordance with the training program, conduct training of personnel who will be doing the work. The training will be based on the task(s) of the scope of work being performed.

7.3 PREPARING PCB AND PCB ITEM CONTAINERS

RSO

1. Weigh the empty container approved for use pursuant to the applicable scale operating procedure.

   NOTE: For PCB transformers, PCB capacitors, PCB contaminated electrical equipment and/or PCB equipment, a 55-gallon (specification 5, 5B, or 17C) container (containers complying with DOE specifications 49 CFR 178.80 will be used) shall be used to accumulate the PCBs or PCB items for transportation to a storage facility. If the item is too large to fit into a 55-gallon container, an alternative container, such as a white metal box shall be used. For liquid PCBs, a 55-gallon (specification 5, 5B without removable head, or specification 17E) closed-head, bung-type drum shall be used. Overpack drums may also be used.

2. Insert two plastic drum liners into the container. Place two layers of oil-absorbent pads between the two drum liners in the container.

3. Place the tared drum into the project area's secondary containment area, if a secondary containment area is required.

7.4 PREPARING THE PROJECT AREA

GENERATOR AND RSO

1. Determine project area requirements as contained in existing work plans, site procedures, and Removal Action 9.

MC&A

2. Assign the FEMP lot marking code.

7.4 PREPARING THE PROJECT AREA (cont.)

GENERATOR AND RSO

3. Obtain concurrence from the facility owner of the project area and the Radiological Control Technician for removal of the PCB or PCB item.

4. Review the work permit requirements for removing the PCB item. Obtain and don proper personal protective equipment (PPE) prior to entrance to the work area.

5. Check the project area to determine if adequate containers and packing materials are available.

   NOTE: PCBs and PCB items, i.e., transformers, capacitors, other PCB contaminated electrical equipment, PCB equipment, PCB liquids, and other PCB contaminated solids (wipes, rags, contaminated PPE, and miscellaneous solids) shall be separated and stored in compatible containers.

6. If sufficient containers and packing materials are not available, contact the supervisor of the project area to obtain the needed materials.

7. Inspect the containers for holes, dents, bulges, or other damage that could affect integrity. If unacceptable, inform the supervisor of the project area who should order replacement containers.

8. Proceed with planned work only when sufficient amounts of necessary materials are available.

9. Designate a staging area to be located in proximity to where the PCB or PCB items are to be removed, accumulated, decontaminated, marked, labelled, and properly packaged before transfer to a storage facility.

   NOTE: The staging area will be temporarily diked (if there is a potential for a spill or leak). Herculite or plastic sheeting and absorbent materials will be provided.

   NOTE: The secondary containment area shall consist of a plastic lined berm area capable of containing 100 percent of the volumetric contents of the disposal drum.

7.4 PREPARING THE PROJECT AREA (cont.)

GENERATOR AND RSO

10. When electrical equipment is involved in the project, contact Electrical Maintenance to conduct lock-out/tag-out procedure(s) to ensure that electrical service has been disconnected.

7.5 REMOVING PCBs AND PCB ITEMS

GENERATOR AND RSO

1. Contact ES&H to monitor the PCB or PCB item for possible radioactive contamination.

> **WARNING**
>
> **IF A PCB ITEM IS LEAKING, IMMEDIATELY GO TO SECTION 7.6.**
> **IF THERE IS NO LEAKAGE, GO TO STEP 2 OF THIS SECTION.**

2. Check for a serial number on the PCB item. If there is no serial number, assign an identification number.

3. Look for any label or mark that indicates whether the item contains PCBs.

   NOTE: If a label or mark is not found, confirming that the item does not contain PCBs, it shall be assumed to contain PCBs and shall be handled pursuant to this procedure until proven otherwise by sampling or by manufacturer information. (See Dielectric Fluid Trade Names and Manufacturers, Attachment B).

> **WARNING**
>
> **RADIOLOGICALLY CONTAMINATED PCBs OR PCB ITEMS MUST BE SEGREGATED FROM NON-RADIOLOGICALLY CONTAMINATED PCBs AND PCB ITEMS.**

4. Remove the PCB item and place it in the designated container.

5. If necessary, wipe the PCB or PCB item with a clean rag to remove any removable radioactive contamination present. If the PCB or PCB item is still radiologically contaminated, repeat the wiping process until the item is clean or it has been determined to have fixed contamination.

7.5 REMOVING PCBs AND PCB ITEMS (cont.)

GENERATOR AND RSO

6. Place any contaminated item(s) on a pallet for transport to Decontamination.

7. Place radiologically clean PCB and PCB items into the disposal container.

   NOTE: Containers of PCBs and PCB items must be placed in the storage facility within 30 days of the PCB items being loaded into the container(s).

7.6 REMOVING LEAKING PCB AND PCB ITEMS

RSO

1. Upon discovery of a leaking PCB or PCB item, report the leak to the AEDO and barricade the immediate work area with caution banners.

2. Request ES&H to survey the area for proper ventilation and safety hazards and to survey for possible radiological contamination.

3. If not previously done, notify Electrical Maintenance to conduct the appropriate lock and tag of electrical equipment to ensure that power has been disconnected from the leaking PCB item.

4. If not previously done, prepare a secondary containment area in the immediate vicinity of the leaking item using a plastic lined berm area into which the leaking PCB item may be taken.

5. Put on rubber gloves that will not absorb PCBs (neoprene, butyl, or nitrile) and wear cover goggles and a rubber apron (if necessary) to help guard against possible exposure to PCBs.

6. Remove the leaking PCB item from service and replace with a non-PCB item, if required.

7. Place a PCB mark on the PCB item.

8. Wrap the leaking PCB item in an absorbent pad.

9. Place the wrapped PCB item in a plastic bag.

7.6 REMOVING LEAKING PCB AND PCB ITEMS (cont.)

RSO

10. Contain the leaking PCB item in the secondary containment area.

11. Because of the physical limitations of surveying inside a PCB item, assume that the leaking PCB item is radiologically contaminated.

RADIOLOGICAL TECHNICIAN

12. Survey the area and the PCB item(s) for radiological contamination.

13. If the PCB item is not radiologically contaminated, mark NON-CONTAMINATED LEAKING on the PCB item inventory sheet and place the wrapped leaking PCB item into an accumulation container marked NON-CONTAMINATED LEAKING PCB ITEM.

14. If there is radiologically contamination, mark CONTAMINATED LEAKING on the PCB item inventory sheet and place the wrapped PCB item into an accumulation container marked CONTAMINATED LEAKING.

15. If the area is radiologically contaminated, take the required actions prior to removing any items or containers from the area.

GENERATOR AND RSO

16. Seal the container containing the leaking PCB item.

17. If the removal involves tagged or untagged electrical equipment, prepare a Property Disposal Request form, FS-F-563.

18. Place the container marked CONTAMINATED LEAKING on a pallet for transport to Storage.

7.7 LABELLING PCB DISPOSAL CONTAINERS

GENERATOR AND RSO

1. Mark or label the container with the required identification for the material to be contained and the tare weight (see Figures 1, 2, and 3).

2. Complete an Item Production/Certification/Identification form, FS-F-1945-4 (65 Card), and a Nuclear Material Transfer Record form, FS-F-1990 (68/69 Card).

3. Insert the 65 Card and 68/69 Card into the plastic envelope on the container lid.

4. Remove the Hazardous Waste Disposal Record form, FS-F-3064, from the plastic envelope on the container lid and record the waste added to the container as follows:

   a. Record material type.

   b. Record the operator's badge number.

GENERATOR AND RSO

5. Return the Hazardous Waste Disposal Record form to the plastic envelope on the drum lid.

6. Complete a PCB Article Tag form (Figure 4) for each PCB item to be removed from service and give to the supervisor to sign and file.

7. Secure the lid on the container.

7.8 TRANSPORTING PCB CONTAINERS AND PCB ARTICLE CONTAINERS TO STORAGE

NOTE: PCB containers and PCB article containers must be placed in the storage facility within 30 days of the PCB or PCB items being loaded into the container(s).

SUPERVISOR OF THE PROJECT AREA

1. Verify the arrival of the transported PCB container or PCB article container at the storage facility.

Fernald Environmental FERMCO Restoration Management Corporation	Title: **MANAGING PCBs AND PCB ITEMS**	
	DOCUMENT NO: SSOP-1027 REVISION NO: 0	
	Effective Date: 03-08-94	Page 17 of 34

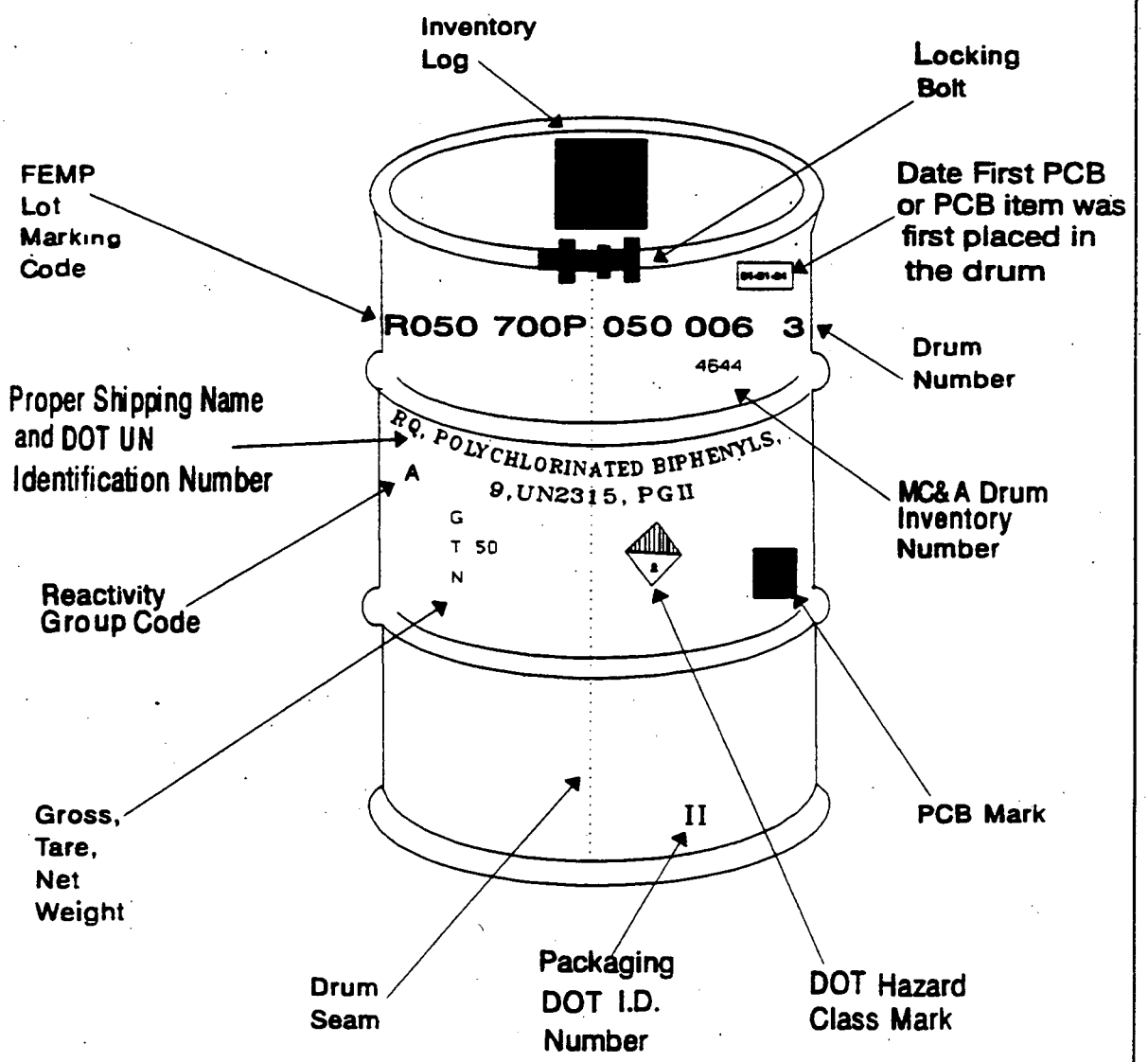

NOTE: If the amount of PBCs in the drum does not equal the Reportable Quantity (1 lb.), it is not necessary to place the DOT information and marks on the drum.

Figure 1 - Schematic of PCB Disposal Drum Labeling

CAUTION
CONTAINS
PCBs

(Polychlorinated Biphenyls)

A toxic environmental contaminant requiring special handling and disposal in accordance with U.S. Environmental Protection Agency Regulations 40 CFR 761-For Disposal Information contact the nearest U.S. E.P.A Office.

In case of accident or spill, call toll free the U.S. Coast Guard National Response Center 800-424-8802

Also Contact DOE/FEMP - AEDO

Tel. No. (513) 738-6200

PCS Printed by LABELMASTER, Div. of AMERICAN LABELMARK CO., CHICAGO, IL. 60646

Figure 2 - "Caution Contains PCBs" Mark

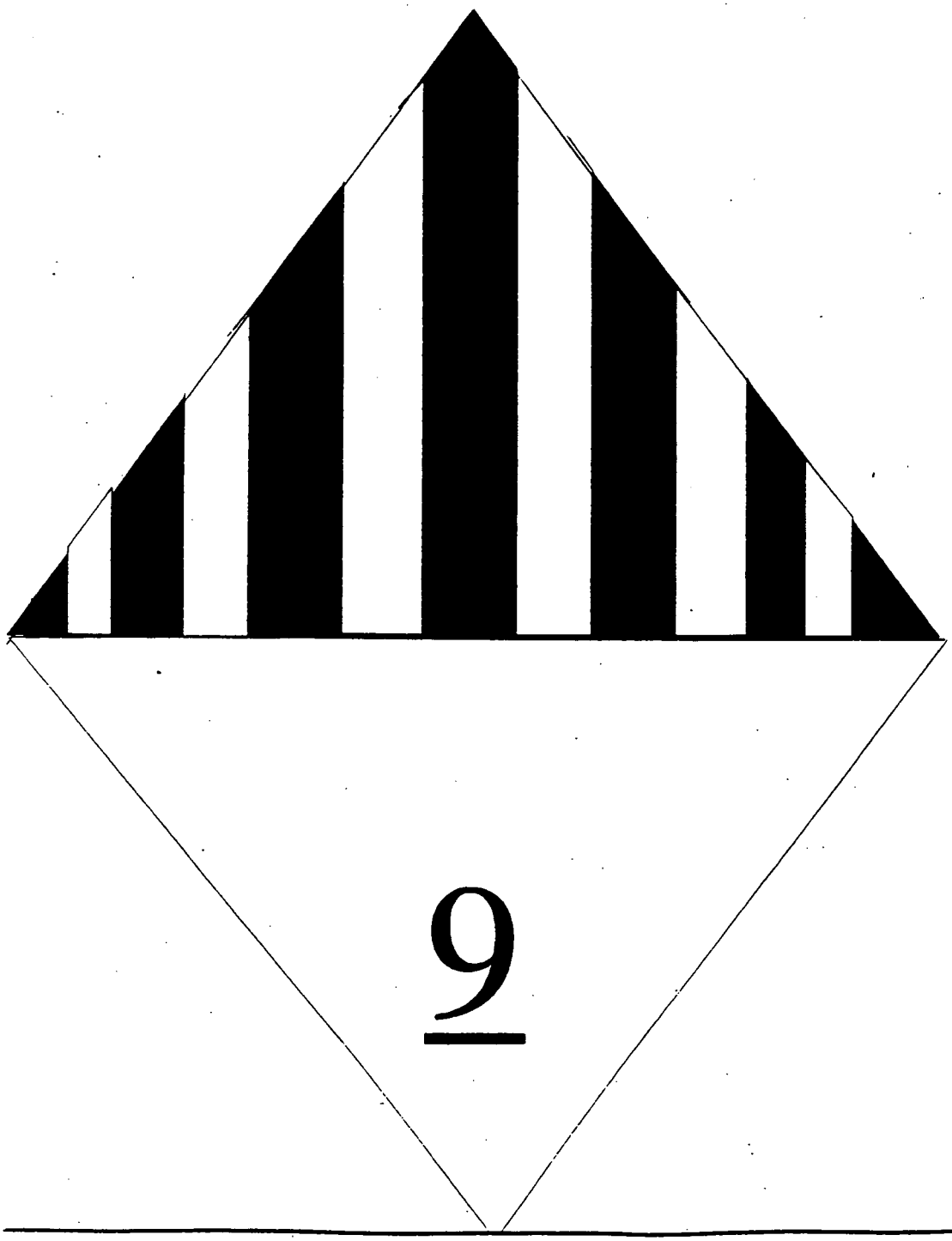

Figure 3 - DOT Shipping Label or Mark for PCB Containers

7.8 TRANSPORTING PCB CONTAINERS AND PCB ARTICLE CONTAINERS TO STORAGE (cont.)

SUPERVISOR OF THE PROJECT AREA

2. Install a lid and bolt-type lock ring on an open-head drum or threaded bung head drum and secure by checking gasket placement and condition of container lid.

   NOTE: Damaged gaskets shall be replaced.

3. Seat lid evenly on open head drum or screw bung plug tightly and evenly into the bung using a bung wrench.

4. Place locking bolt ring on lid of open head container ensuring the flanges point downward from the lock ring.

5. Install locking bolt shaft through the unthreaded flange, the locking nut, and threaded flange, in that order, so that the bolt head rests against the unthreaded flange.

6. Torque bolt to 45 lb-ft using breakaway torque wrench.

7. Manually tighten the locking nut against the thread flange.

8. Using a wrench, tighten the lock nut against the flange an additional one-quarter turn.

9. Move the sealed drum to the weighing station with a fork lift and record the final weight of drum.

   NOTE: Maximum weight per 55-gallon drum is 1,200 pounds gross.

10. Obtain the net weight of the container by subtracting the tare weight of the container from the weight indicated by the scale.

11. Remove the 65 Card from the envelope on the container and record the gross weight, net weight, lot sequence number, and badge number.

12. Return the card to the envelope on the container lid.

13. Stencil the gross weight, net weight, lot sequence number, and drum number on the container.

Fernald Environmental RMC Restoration Management Corporation	Title: **MANAGING PCBs AND PCB ITEMS**	
	DOCUMENT NO: SSOP-1027 REVISION NO: 0	
	Effective Date: 03-08-94	Page 21 of 34

FEMP
ENVIRONMENTAL COMPLIANCE
PCB ARTICLE TAG - Remove-From-Service Information"

ARTICLE I.D. NO.	MODEL NO.:	SERIAL NO.:	CAPACITY (gal.):
VOLTAGE:	MANUFACTURER:	OTHER I.D. ITEMS:	
DESCRIPTION OF ITEM REMOVED: LEAKING? ☐ YES ☐ NO	ANY SPILLS DURING REMOVAL? ☐ YES ☐ NO	IF YES, DESCRIBE BELOW:	
REMOVED FROM SERVICE BY Name: _____ Date: ____/____/____		**ADDITIONAL INFORMATION** (SKETCHES, ETC.):	
IN STORAGE BY Name: _____ Date: ____/____/____			
SERVICE LOCATION: (PLANT, SPECIFIC AREA, ETC.)		SERVICE OPERATION: (FURNACE, JOLTER, ETC.)	
RADIATION SURVEY RESULTS		ANALYTICAL RESULTS (IF APPLICABLE)	

NO.	DISTRIBUTION OF COPIES
1	Industrial Hygiene
2	Environmental Compliance
3	Solid Waste Compliance
4	Waste Management
5	Maintenance
6	Transportation

FS-F-2818 (REV. 10/15/92)

Figure 4 - PCB Article Tag - Removal from Service Information, FS-F-2818

7.9 SAMPLING RESIDUES

RSO

Return sample residues to the appropriate containers pursuant to site media sampling procedures.

7.10 MONTHLY INSPECTION OF THE PCB STORAGE FACILITY (BUILDING 81)

RSO

Perform inspection pursuant to SOP 20-C-616.

8.0 APPLICABLE DOCUMENTS

8.1 DRIVERS

- 40 CFR 761, Polychlorinated Biphenyls (PCBs) Manufacturing, Processing, Distribution in Commerce an e Prohibitions
- 49 CFR 178.80, Department of Transportation

8.2 REFERENCES

- EM-SM-006, Sample Plan Development Procedure
- FERMCO PCB Policy
- PL-2194, FERMCO Spill Prevention Control and Countermeasure (SPCC) Plan
- Removal Action 9
- RM-0005, FEMP Lot Marking and Color Coding System
- SOP-20-C-616, Inspection of Hazardous Waste Management Units
- SOP-20-C-912, Checking Scale Operation
- SSOP-0035, Satellite Accumulation Areas and Interim Containers for Hazardous Wastes
- SSOP-0719, Energy Control Procedure (Lockout and Tagout)
- SSOP-0035, Accumulating Hazardous Waste in Satellite Accumulation Areas and Interim Containers

ATTACHMENT A
Sheet 1 of 11

U. S. Department of Energy
Fernald Environmental Management Project
Letter No. C:OP:93-1413

Mr. J. Phil Hamric, Manager
Department of Energy
Fernald Field Office
P. O. Box 398705
Cincinnati, Ohio 45239-8705

Dear Mr. Hamric:

CONTRACT DE-AC05-92OR21972, FERMCO'S PCB POLICY

This document introduces FERMCO's PCB Policy for managing polychlorinated biphenyls (PCBs), PCB items, and fluorescent light ballasts at the FEMP. This document supersedes and thereby nullifies the pre-existing WEMCO-originated PCB Policy.

Prior to introducing FERMCO's policy, the following background on the WEMCO PCB Policy at the FEMP is presented.

WEMCO PCB POLICY AT THE FEMP

Westinghouse Environmental Management Company of Ohio (WEMCO), as directed by Westinghouse Electric Corporation (Westinghouse), implemented a corporate PCB policy which addressed the issues of handling, storing, and disposition of PCBs and PCB items at all Westinghouse facilities. Westinghouse's corporate policy required any items that contained PCB concentrations of 2 parts per million (ppm) or greater to be managed in accordance with 40 CFR 761. Federal requirements stated in 40 CFR 761 are specifically applicable only to items with a PCB concentration of 50 ppm or greater. At the FEMP, the major category of PCBs impacted by the WEMCO policy are fluorescent light ballasts.

Following is a passage from the Westinghouse PCB Light Ballast Policy:

> "PCB ballasts fall into the small capacitor category as defined in 40 CFR 761.3. While the federal regulations do not have any requirements for disposal unless you manufacture PCB equipment [emphasis added], Westinghouse takes a more conservative approach. As specified in Chapter 9 of the Westinghouse Environmental Manual, Westinghouse facilities [e.g., the FEMP] are to follow the federal requirements for the accumulation of the infrequently generated unit, that is, no specific disposal requirements. However, if any quantity is accumulated during a given year, then it must be incinerated as a PCB waste. In addition, all of the accumulation, labeling, and storage requirements for PCB materials must also be satisfied.

ATTACHMENT A
Sheet 2 of 11

Mr. J. Phil Hamric
Letter No. C:OP:93-1413
Page 2

Potential liability, public opinion and changing regulations are the predominant reasons why Westinghouse's PCB disposal requirements are more stringent than the regulations. Disposal of small PCB capacitors in a sanitary landfill potentially exposes Westinghouse to longer term cleanup liabilities. Also, the public opinion and possible media exposure would not be very favorable if it was ascertained that Fernald was disposing of 'PCBs' into the local sanitary landfill."

FERMCO'S PCB POLICY

Non-radioactive PCBs and PCB items will be managed (including marking, labelling, handling, storing, disposition and reporting) in compliance with the federal requirements as stated at 40 CFR 761, *"Polychlorinated Biphenyls (PCBs) Manufacturing, Processing, Distribution in Commerce, and Use Prohibitions"*. Any item containing dielectric fluids at a PCB concentration of 50 ppm or greater will be considered and managed as a PCB item, consistent with 40 CFR 761.

Any nonleaking item or material containing a PCB concentration of 49 ppm or less will be considered and managed as non-PCB and categorized as "excluded PCB products" as defined at 40 CFR 761.3. Excluded PCB products are not subject to the marking, labelling, storing, and administrative requirements (e.g., PCB Document Log, PCB Annual Document Report) for PCBs and PCB items contained in 40 CFR 761. Therefore, administrative requirements such as the preparation and submittal of the PCB Annual Document Log will not be applicable to such excluded PCB products. Electronic and solid state equipment, such as computers, clocks, radios and microwave ovens, are presumed not to contain PCBs and will also be managed as non-PCB items. Small capacitors, such as those contained in fluorescent light ballasts, are not regulated by the federal requirements except when leaking. Any PCB item (e.g, fluorescent light ballast) found to be <u>leaking</u> will be regulated and managed in accordance to 40 CFR 761.

As a Best Management Practice (BMP), fluorescent light ballasts will be stored in a storage area conforming to 40 CFR 761.65 <u>once</u> the drum is full. Building 81 is currently utilized as the designated storage area of PCBs and is in compliance with 40 CFR 761.65 (i.e., adequate roof/walls, containment, etc.).

Any drum(s) containing non-radioactively-contaminated, nonleaking fluorescent light ballasts will be marked on two sides of the drum, "UNREGULATED LIGHT BALLASTS". Any drum(s) containing radioactively-contaminated, nonleaking fluorescent light ballasts will be marked on two sides of the drum,

"RADIOACTIVELY CONTAMINATED LIGHT BALLASTS". For both types of drums of light ballasts, the lettering of the marking on the drums will be at least two (2) inches in height.

ATTACHMENT A
Sheet 3 of 11

Mr. J. Phil Hamric
Letter No. C:OP:93-1413
Page 3

Partially full drums of PCBs and PCB items will be consolidated into full drums as long as the contents are segregated by corresponding type of item (e.g., PCB liquids, PCB transformers, unregulated light ballasts) and radioactive concentration (e.g, non-radioactive items, radioactive items) to ensure no mixing or commingling of waste types during consolidation. Such consolidation should decrease the inventory of PCB drums at the FEMP, reduce the potential for a release to employees and the environment, reduce space occupied by such drums in the designated PCB storage area currently within Building 81 , and allow more cost-effective transport and disposal of these drummed materials.

As a Best Management Practice (BMP), consistent with pollution prevention and waste minimization (PP/WM) principles, all non-radioactively-contaminated, nonleaking fluorescent light ballasts will be disposed of by a FERMCO-approved recycling vendor. FERMCO will initiate a procurement prior to the dismantlement of fluorescent light ballasts with the following technical approach/scope: FERMCO will initially package the fluorescent light ballasts into proper drums ensuring fluorescent light ballasts are not leaking and that they are not radioactive; the vendor will collect the drums of fluorescent light ballasts and transport the drums to the recycling facility; at the facility, the vendor will remove the small capacitors from the ballasts, pack the small capacitors in drums and transport the small capacitors to a TSCA-approved incinerator for disposal, and recycle the remaining materials for valuable metals. The capacitors will not be considered PCB waste since the capacitors are not regulated as PCBs according to 40 CFR 761. In the event that no such responsive/responsible vendor or subcontractor can be located as a result of such procurement action, an acceptable alternate approach is procurement action for disposal via a TSCA- approved incinerator without recycling/reclamation.

All spills of PCBs will be managed in compliance with the federal requirements as stated in 40 CFR 761.120 through 761.135. A spill refers to both intentional and unintentional releases, spills, leaks, and other uncontrolled discharges where the release results in "any quantity of PCBs running off or about to run off the external surface of the equipment or other PCB source, as well as the PCB contaminated material resulting from those releases." Such PCB contaminated material includes cleanup debris (e.g., absorbent), rags, soil, concrete, and rinsate generated from the clean-up affected by the release.

Where a spill of untested mineral oil occurs, the oil is presumed to contain greater than 50 ppm but less than 500 ppm and is subject to the EPA Cleanup Policy.

ATTACHMENT A
Sheet 4 of 11

Mr. J. Phil Hamric
Letter No. C:OP:93-1413
Page 4

ACQUISITION AND SALVAGE OF FLUORESCENT LIGHT BALLASTS

An intact, nonleaking, and structurally sound fluorescent light ballast bought for use before July 1979, may be sold for subsequent use as stated in 40 CFR 761.20(c)(1) for purposes other than resale and may be distributed in commerce only in a totally enclosed manner after that date. FERMCO will request a statement from its vendors prior to purchase of fluorescent light ballasts documenting that the items provided **do not** contain PCBs. In the event that FERMCO salvages any useable fluorescent light ballast for resale or use, such salvage will be limited to only those fluorescent light ballasts which do not contain PCBs.

CONTACTS

If you have any questions and/or comments concerning this letter, or the full policy document presented as Attachment 1, please contact Ken Alkema, of my staff, at (513) 738-9228. Revisions to existing SOPs and other procedures needed to implement this change from pre-existing policy are either in progress or will be initiated shortly.

Very truly yours,

N. C. Kaufman
President

NCK:MJS:jhc
Attachment

c: L. G. Abernathy, FERMCO
J. T. Curtis, FERMCO
N. W. Fraser, FERMCO
D. L. Kalar, FERMCO
J. McGuire, FERMCO
G. P. Motl, FERMCO
D. A. Rast, DOE-FN
M. J. Strimbu, FERMCO
File Record Storage Copy 102.1
K. L. Alkema, FERMCO
J. A. Eckstein, FERMCO
D. L. Howe, FERMCO
S. K. Kaster, FERMCO
Robert Mendelsohn, DOE-FN
D. Paine, FERMCO
B. P. Shroff, DOE-FN
J. T. Witzeman, FERMCO

	Title: MANAGING PCBs AND PCB ITEMS	
Fernald Environmental FERMCO Restoration Management Corporation	DOCUMENT NO: SSOP-1027 REVISION NO: 0	
	Effective Date: 03-08-94	Page 27 of 34

ATTACHMENT A
Sheet 5 of 11

FERMCO PCB POLICY

PCBs AND PCB ITEMS

PCBs and PCB items will be managed (including handling, marking, labelling, storing, disposition and reporting) in compliance with the federal requirements as stated at 40 CFR 761, *"Polychlorinated Biphenyls (PCBs) Manufacturing, Processing, Distribution in Commerce, and Use Prohibitions"*. Any item containing dielectric fluids at a PCB concentration of 50 ppm or greater will be considered and managed as a PCB item, consistent with 40 CFR 761. Radioactively contaminated PCBs and PCB items will be handled in the same manner regarding PCBs, but with the addition of radioactive waste management considerations and requirements.

EXCLUDED PCB PRODUCTS

Any item or material containing a PCB concentration of 49 ppm or less will be considered and managed as non-PCB and categorized as "excluded PCB products" as defined at 40 CFR 761.3. Excluded PCB products are not subject to the marking, labelling, storing, and administrative requirements (PCB Annual Document Log and Annual Report) for PCBs and PCB items contained in 40 CFR 761. Therefore, administrative requirements such as the preparation and submittal of the PCB Annual Document Log will not be applicable to such excluded PCB products. Electronic and solid state equipment such as computers, radios, clocks and microwave ovens are presumed not to contain PCBs and will be managed as non-PCB items.

FLUORESCENT LIGHT BALLASTS

.uorescent light ballast, as defined at 40 CFR 761.3, means a device that electrically controls fluorescent light fixtures and that includes a capacitor containing 0.1 kilograms (about 1 to 1.5 ounces) or less of dielectric fluid.

Provided that they are (1) not leaking, and (2) not collected during the manufacture of capacitors or equipment containing capacitors, there are no federal requirements for storage of small capacitors, such as those contained in fluorescent light ballasts. The FEMP is not currently nor has it ever been engaged in the manufacture of either capacitors or equipment containing capacitors.

As a Best Management Practice (BMP), it is therefore FERMCO's policy that fluorescent light ballasts will be stored in a storage area conforming to 40 CFR 761.65 once the drum is full. Building 81 is currently utilized as the designated storage area of PCBs and is in compliance with 40 CFR 761.65.

It is FERMCO's policy that any drum(s) containing non-radioactively contaminated, nonleaking fluorescent light ballasts will be marked on two sides of the drum, "UNREGULATED LIGHT BALLASTS". It is also FERMCO policy that any drum(s) containing radioactively-contaminated, nonleaking fluorescent light ballasts will be marked on two sides of the drum, "RADIOACTIVELY CONTAMINATED LIGHT BALLASTS". The lettering of the marking on the drums will be at least two (2) inches in height for both types of drums of light ballasts.

In the event that other such excluded PCB products are identified, FERMCO will manage such items in a the same manner as light ballasts. FERMCO will assess whether the other such excluded PCB products should be segregated from fluorescent light ballasts.

SMALL PCB CAPACITORS

Non-leaking small PCB capacitors other than those found in light ballasts will also be managed as excluded PCB products. These may be found in electrical equipment or control panels such as circuit breakers, voltage regulators, reclosers and switches. As a BMP, these will be recycled for valuable metals and the PCBs will be incinerated at a TSCA-approved incinerator.

CONSOLIDATION OF PARTIALLY FULL DRUMS

It is FERMCO's policy that partially full drums of PCBs and PCB items will be consolidated into full drums as long as the contents are segregated by corresponding type of item (e.g., PCB liquids segregated from PCB transformers) and radioactive concentration (e.g. non-adioactive segregated from radioactive items) to ensure no mixing or commingling of waste types during consolidation. Such consolidation ll decrease the inventory of PCB drums at the FEMP, reduce the potential for a release to employees and the environment, reduce space . Building 81 occupied by drums, and allow more cost-effective transport and disposal of these drummed materials.

DISPOSITION OF EXCLUDED PCB PRODUCTS

The FEMP is not currently nor has it ever been engaged in the manufacture of capacitors or equipment containing capacitors. Provided that small capacitors, such as these contained in fluorescent light ballasts, are not leaking, the FEMP "may dispose of PCB small capacitors (including fluorescent light ballasts) as municipal solid waste ... " [40 CFR 761.60(a)(2)(ii)]. Leak or leaking means any instance in which a PCB Article, PCB Container, or PCB Equipment (e.g., small capacitor, fluorescent light ballast) has any PCBs on any portion of its external surface [40 CFR 761.3].

As a Best Management Practice (BMP) consistent with pollution prevention and waste minimization (PP/WM) principles, it is FERMCO's policy that all non-radioactively-contaminated, nonleaking fluorescent light ballasts will be disposed of by a FERMCO-approved recycling vendor. The vendor will collect the drums of fluorescent light ballasts and transport the drums to the recycling facility. At the facility, the vendor will remove the small capacitors from the ballasts, pack the small capacitors in drums and transport the small capacitors to a TSCA-approved incinerator for disposal, and recycle the remaining ballast materials for valuable metals. The capacitors will not be considered PCB waste since the capacitors are not regulated as PCBs according to 40 CFR 761. In the event that no such responsible and responsive vendor or subcontractor can be located via appropriate procurement solicitation, an acceptable alternative approach is disposal via a TSCA-approved incinerator without recycling/ reclamation.

ACQUISITION AND SALVAGE OF FLUORESCENT LIGHT BALLASTS

An intact, nonleaking, and structurally sound fluorescent light ballast, bought for use before July 1979, may be sold for subsequent use as stated in 40 CFR 761.20(c)(1) for purposes other than resale and may be distributed in commerce only in a totally enclosed manner after that date.

It is FERMCO's policy to request a statement from its vendors prior to purchase of fluorescent light ballasts documenting that the items provided do not contain PCBs. In the event that FERMCO salvages any useable fluorescent light ballast for resale or use, it is FERMCO's policy that salvage will be limited to only those fluorescent light ballasts which do not contain PCBs.

SUMMARY

PCB disposal requirements are presented in the following table.

CONTACTS

Questions and/or comments concerning this document should be referred to FERMCO's Regulatory Programs Division, Ken Alkema, at (513) 738-9228.

ATTACHMENT A
Sheet 7 of 11

FERMCO PCB POLICY
-PCB Disposal Requirements
(Non-radioactive)

Material/Item	Federal Regulations	FERMCO Requirements
I. Liquids		
2-49 ppm	Prohibited for use as a dust Incinerate dielectric control agent. Burn in a boiler, fluids at TSCA-TSCA- or RCRA-approved facility.	approved facility approved by FERMCO.
50-499 ppm	Incinerate in approved unit, or approved high efficiency boiler or by alternative USEPA-requires approval	Same as federal burn in except facility approved method by FERMCO.
500 ppm or	Incinerate in TSCA-approved unit or destroy with equivalent	Same as federal greater except facility approved method. requires approval by FERMCO.

ATTACHMENT A
Sheet 8 of 11

FERMCO PCB POLICY
PCB Disposal Requirements
(Non-radioactive)

Material/Item	Federal Regulations	FERMCO Requirements
II. Transformer Carcass Previously Contained		
	2-49 ppm	Not regulated. Drain all free-liquid and dispose as in Section I above. Landfill all parts in approved chemical landfill or salvage parts at facilities approved by FERMCO.
	50-499 ppm	Drain all free-liquid and Same as above dispose as in Section I above, then carcass not regulated.
	500 ppm or greater	Drain liquid, fill with solvent and let stand 18 hours; drain again. Dispose of all liquids as specified in Section I above, landfill carcass in approved RCRA-permitted chemical waste landfill or decommission by other equivalent alternative means approved by USEPA or incinerate entire unit.
	Same as federal except	Same as above dispose as in Section I above, then carcass not regulated.
		approval by FERMCO as
		facility requires
		approved by USEPA or

ATTACHMENT A
Sheet 9 of 11

FERMCO PCB POLICY
PCB Disposal Requirements
(Non-radioactive)

Material/Item	Federal Regulations	FERMCO Requirements
III. Capacitors		
Small	Not regulated unless facility manufactured PCB equipment, then incinerate dielectric fluids must incinerate in TSCA-approved unit	Recycle metal and <3 lbs. fluids at TSCA-approved facility approved by FERMCO.
Large	Shred and incinerate in TSCA-approved unit.	Same as federal except >3 lbs. facility must be approved by FERMCO.
2-49 ppm	Not regulated.	Recycle metal and incinerate dielectric fluids at a TSCA-approved facility approved by FERMCO.
50-499 ppm	Incinerate or landfill in TSCA-approved unit	Shred and incinerate in TSCA-approved unit approved by FERMCO.

ATTACHMENT A
Sheet 10 of 11

FERMCO PCB POLICY
PCB Disposal Requirements
(Non-radioactive)

Material/Item	Federal Regulations	FERMCO Requirements
IV. Solids		
Rags, soil, debris, empty containers, etc. (no free liquid)		
2-49 ppm	Not regulated	Landfill in TSCA- ("excluded PCB product") approved or RCRA-permitted chemical waste landfill approved by FERMCO.
50 ppm or greater	Landfill in TSCA-approved chemical waste landfill or incinerate; empty containers can be approved by FERMCO; decontaminated by triple rinsing.	Incinerate at a TSCA-approved facility empty containers can decontaminated by triple rinsing -- dispose of all liquids as in Section I above.

ATTACHMENT A
Sheet 11 of 11

FERMCO PCB POLICY
PCB Disposal Requirements
(Non-radioactive)

Material/Item	Federal Regulations	FERMCO Requirements
V. Hydraulic Equipment		
2-49 ppm	Not regulated ("excluded PCB Drain liquid and product), except liquids as dispose of liquids as in Section I above in Section I and equipment as in Section II above.	
50-999 ppm	Not regulated, except liquids Same as above as in Section I above.	
1000 ppm	Drain free liquid and flush Same as federal except or greater with a suitable solvent, dispose disposal facility must of all liquids as in Section I be approved by FERMCO above, then equipment not regulated (exterior surfaces may have to be cleaned to USEPA spill policy standards).	
VI. Other		
	Any miscellaneous equipment contaminated with PCBs can be handled according to the appropriate categories above. Equipment which will be sold for re-use may have to be decontaminated according to the USEPA Spill Policy Standards (40 CFR 761, Subpart G). Check with FERMCO's Regulatory Programs Division for specific requirements.	

ATTACHMENT B

Dielectric Fluid Trade Names and Manufacturers

1. U.S. Manufactured Dielectrics:

Name	Manufacturer
Aroclor	Monsanto
Aroclor B	Mallory
Askarel (Heavy Duty)	Heavy Duty Corp
Askarel*	Ferranti Packard, Ltd
Askarel	Universal Mfg Co
Chlorextol	Allis Chalmers
Chlorpen	Jard Company
Chlorinol	Sparagoe Electric
Diaclor	Sangamo Electric
Dykanol	Cornell Dubilier
Elemex	McGraw Edison
Eucarel	Electric Utilities Corp
Hyvol	Aerovox
Inerteen	Westinghouse Electric
No Flamol	Wagner Electric
Pyranol	General Electric
Saf-T-Kuhl	Kuhlman Electric

* Generic name used for insulating liquids in capacitors and transformers.

2. Foreign Manufactured Dielectrics:

Name	Manufacturer
Clophen	Bayer (Germany)
Fenclor	Caffaro (Italy)
DK	Caffaro (Italy)
Kennechlor	Mitsubishi (Japan)
Santotherm	Mitsubishi (Japan)
Solvol	USSR
Phenoclor	Prodelec (France)
Pyralene	Prodelec (France)

3. Items that list other dielectrics, or do not bear a manufacturer's identification/service plate, or if the item contains any of the dielectrics commonly referred to as ASKARELS, the item is to be certified as a PCB item and no laboratory analysis is necessary.

Fernald Environmental Management Project Fernald Environmental Restoration Management Corp. REMEDIATION SUPPORT OPERATIONS DOCUMENT PROGRAM		Page 1 of 5 Revision No. 0 Revision Date: None
REMEDIATION SUPPORT OPERATIONS PROCEDURE	Crushing Scrap Drums	SOP 01-C-306 Area: Plant 1
(Signature On File) Authorization: H. R. Bailey Materials Management Manager	Supersedes: 01-C-306 Dated: 09-26-89	Issue Date: 01-07-94

NON-CONTROLLED COPY

1.0 **PURPOSE**

The purpose of this document is to provide the procedure for crushing scrap drums/cans.

2.0 **APPLICABILITY**

This procedure applies to the LICKITY DRUM CRUSHER (Model Number 36LRDC) used for crushing scrap drums/cans.

3.0 **RESPONSIBILITIES**

3.1 **Supervisors** shall be responsible for the following:

3.1.1 Ensuring that personnel are qualified per the established training requirements identified by the Division Manager.

3.1.2 Contacting Industrial Hygiene or Radiological Control to determine the appropriate respiratory protection for the process being performed.

3.1.3 Issuing the required respiratory protection to operators.

3.1.4 Reviewing applicable Material Safety Data Sheets (MSDs) with operators.

3.2 **Operators** shall be responsible for complying with this SOP.

3.3 **Environmental Safety and Health (ES&H)** shall be responsible for conducting random smears of the drums to be crushed.

4.0 **DEFINITIONS**

None

5.0 **APPLICABLE DOCUMENTS**

5.1 Drivers

5.1.1 RM-0012, "Quality Assurance Program Description"

5.1.2 "FEMP Conduct of Operations Manual"

5.1.3 PO-D-026, "Site Services Document Program"

5.0 **APPLICABLE DOCUMENTS** (cont.)

5.2 References

5.2.1 None

6.0 **INDUSTRIAL HEALTH AND SAFETY REQUIREMENT**

6.1 A defined safety system is not involved.

6.2 Safety glasses with side shields shall be worn unless other eye protection is specified by ES&H.

6.3 Hearing protection shall be worn by the operator of the drum crusher and personnel in the drum reconditioning facility when the drum crusher is in operation.

6.4 ES&H shall be contacted prior to the start of the drum crushing operation and at 500 drum intervals to perform random smears of the drums which are to be crushed.

6.5 Respiratory protection provided by the supervisor shall be worn when required by ES&H.

6.6 Leather-palm gloves shall be worn when handling drums/cans, operating equipment, and when handling rough, sharp-edged, or contaminated material.

6.7 HEPA type filter vacuum cleaners or a vacuum system approved by ES&H shall be used for cleaning.

6.8 Operators shall have reviewed and be familiar with MSDSs for hazardous chemicals/materials that may be used or encountered.

6.9 Any circumstance which could have resulted in an intake of radioactive materials by inhalation, ingestion, or absorption shall immediately be reported to a supervisor. The supervisor shall immediately report the circumstance of possible radioactive materials intake to ES&H Radiological Control Department for evaluation. When the suspect isotope is uranium, the involved personnel shall report to the Urine Sampling Station at the end of their shift to complete an Incident Investigation Report (IRR) (Form No. FS-F-1458), and submit an incident urine sample. The involved personnel shall also report to the Urine Sampling Station at the start of their next shift to submit a follow up urine sample. When the suspect isotope is other than uranium, the involved personnel shall report to the Dosimetry Section of the Radiological Control Department for further determination of actions. Employees are responsible for complying with additional requirements as specified by the Radiological Control Section.

6.0 INDUSTRIAL HEALTH AND SAFETY REQUIREMENT (cont.)

6.10 Any situation which could have resulted in the inhalation, ingestion, or absorption of a hazardous material shall immediately be reported to a Supervisor or to the Assistant Emergency Duty Officer (AEDO), who will immediately report the circumstances to Medical and Industrial Hygiene. The involved personnel shall be directed by the Supervisor or AEDO as to when and where to report for medical evaluation, completion of an Incident Investigation Report (IRR) (Form No. FS-F-1458), and submitting bioassay samples (e.g. blood, urine). Employees are responsible for complying with any additional requirements as specified by ES&H.

7.0 **GENERAL**

7.1 Warnings, Caution, and Notes precede the Step or Item to which they apply.

8.0 **PROCEDURE**

8.1 Operation of the Drum Crusher

8.1.1 Remove the oil tank breather cap located on top of the hydraulic oil reservoir.

> **CAUTION**
>
> If the oil level is below one inch from the top of the tank, do not operate the crusher.

8.1.2 Visually check that the oil level is within one inch of the top of the tank.

8.1.2.1 Notify the supervisor if the level is low.

8.1.3 Install the breather cap on the reservoir.

8.1.4 Visually check that the drum is empty.

8.1.4.1 If the drum is not empty or contains residues, contact the supervisor and request disposition instructions.

8.1.5 Remove bung(s) installed in drum.

8.1.6 Open the door of the crusher hopper.

8.1.7 Place the empty drum in the hopper.

NOTE: There is an electrical safety device on the drum crusher to prevent crusher operation if the door is not closed.

8.1.8 Close the hopper door.

8.0 **PROCEDURE** (cont.)

8.1.9 Press the START button.

NOTE: The lever will automatically return to the neutral position at the completion of the cycle.

8.1.10 Push the AUTOMATIC CONTROL LEVER to the forward position and release.

8.1.11 After the crusher has completed the cycle and stopped, open the door.

8.1.12 Remove the crushed drum from the hopper.

8.1.13 Visually inspect the drum crusher hopper for residue.

8.1.13.1 If residue is found, clean the hopper using a HEPA type filter vacuum cleaner or a vacuum system approved by ES&H.

8.1.14 Repeat steps 8.1.4 through 8.1.13 for each drum crushed.

8.1.15 Place crushed drum or can in designated shipping container.

9.0 **APPLICABLE FORMS**

NONE

6989

RECORD OF ISSUE/REVISIONS

DATE	REV.NO.	DESCRIPTION AND AUTHORITY
09-26-89	0	Issued according to CIO C89-031 per Request No. P89-287.
01-07-94	0	Reissued to update to current program requirements per Request P93-730, initiated by J. G. Rowe.

NON-CONTROLLED COPY

1.0 PURPOSE

The purpose of this document is to provide the procedure for identifying and overpacking drums and containers of thorium.

2.0 APPLICABILITY

This procedure is applicable to drums and containers of thorium being overpacked in Building 64.

3.0 RESPONSIBILITIES

OSR> 3.1 Supervisors shall be responsible for the following:

3.1.1 Ensuring that operators and observers are qualified per the established training requirements identified by the Division Manager.

3.1.2 Obtaining a "Radiation Work Permit" (RWP) for each shift of operation.

3.1.3 Reporting exceptional circumstances not addressed by this SOP in a "Minor Event Report" (Refer to FMPC-704) and notifying the Assistant Emergency Duty Officer (AEDO) of the circumstance.

3.1.4 Checking the Environmental Temperature Indicators at the start and mid-point of each shift of operation.

3.1.5 Contacting Industrial Hygiene and/or Radiological Safety to determine the appropriate respiratory protection for the task being performed.

3.1.6 Issuing the required respiratory protection to operators.

3.1.7 Reviewing applicable Material Safety Data Sheets (MSDS) with operators.

3.1.8 Contacting the Communications Center, at the start of the shift, to obtain wind speed and direction.

3.1.9 Monitoring weather conditions during overpacking.

3.1.10 Recording wind speed and direction before startup and during the shift.

3.1.11 Using the radio to contact control to obtain wind speed during overpacking.

3.0 RESPONSIBILITIES (cont.)

OSR> 3.2 **Operators** shall be responsible for the following:

3.2.1 Complying with the requirements of this SOP unless other personnel are identified as being responsible for completing the required task.

3.2.2 Reporting exceptional circumstances not addressed in this SOP to the supervisor or, in the supervisors absence, the AEDO.

4.0 DEFINITIONS

4.1 Alpha Particle - A charged particle emitted from the nucleus of an atom that is potentially dangerous to personnel from an inhalation.

4.2 Beta Particle - A charged particle emitted from the nucleus of an atom that is potentially dangerous to personnel from an inhalation and skin contact standpoint only.

4.3 Biweekly - Every 14 calendar days.

4.4 Class E and F Stabilities - Atmospheric conditions that exist when windspeed is less than five mph.

4.5 Container - A unit (5, 10, 15, 30 gallon can) that contains radioactive materials.

4.6 Drum - A unit (55 or 85 gallon) that contains radioactive materials. A drum can contain none, one, or multiple containers.

4.7 Gamma Ray - Short wavelength electromagnetic radiation emitted from the nucleus that is potentially dangerous to personnel from a total energy standpoint.

4.8 Overpack - Secondary (or additional) external containment for containers or drums of radioactive materials.

4.9 Overpack Box (Six-Pack Overpack) - A steel box used to contain six 55-gallon drums or three 85-gallon drums.

4.10 Overpacking - The act or process by which multiple drums are placed in an external containment for transportation.

4.11 Package - The overpack together with its radioactive contents.

4.12 Pyrophoric Thorium - Thorium (such as fines (sawdust), turnings, and briquettes) that, due to physical characteristics, is pyrophoric and ignites easily when exposed to air.

OSR> 4.13 Spill - Any noticeable amount of material lost, in an unplanned event, from a container.

4.14 Spotter - Personnel that use hand signals and/or radio to direct the forklift MVO to safely lower drums from storage stacks.

4.0 DEFINITIONS (cont.)

4.15 Thorium Metal or Thorium - Thorium materials (including metal rods, thorium oxides, thorium oxalates, thorium metal chips, and thorium metal fines).

4.16 Transfer Box - A metal box, open at one end, used to transfer the drums on the stack to the overpacking facility.

5.0 APPLICABLE DOCUMENTS

5.1 Drivers

5.1.1 PO-D-026, "Site Services Document Program"

5.1.2 "FEMP Conduct of Operations Manual"

5.2 References

5.2.1 FMPC 503, "FMPC Spill Incident Reporting and Cleanup"

5.2.2 SOP 1-C-101, "Sampling Residue and Waste Materials"

5.2.3 SOP 1-C-916, "Plant 1 Hoists and Cranes"

5.2.4 FMPC-704, "Minor Event Reporting"

6.0 INDUSTRIAL HEALTH AND SAFETY REQUIREMENTS

6.1 All personnel involved in the overpacking operation shall wear the following:

(A) respiratory protection specified by ES&H
(B) flame retardant coveralls
(C) flame retardant disposable outer coveralls
(D) surgical rubber gloves
(E) leather palm gloves
(F) safety shoes
(G) rubber shoe covers
(H) safety glasses
(I) TLD
(J) special TLD
(K) self-reading pencil dosimeters

6.0 INDUSTRIAL HEALTH AND SAFETY REQUIREMENTS (cont.)

6.2 Qualified observers shall wear the following:
- (A) full face HEPA filtered respirator equipped with a purple cartridge
- (B) flame retardant coveralls
- (C) flame retardant disposable outer coveralls
- (D) surgical rubber gloves
- (E) leather palm gloves
- (F) safety shoes
- (G) rubber shoe covers
- (H) safety glasses
- (I) TLD
- (J) special TLD
- (K) self-reading pencil dosimeters

6.3 Observers shall be limited to 30 minutes maximum per day.

6.4 Flame retardant coveralls shall be taped at the wrist and cuffs.

6.5 Forklift operators shall wear the following:
- (A) powered air purifying respirator (PAPR)
- (B) company issued safety shoes
- (C) safety glasses
- (D) TLD
- (E) special TLD
- (F) self-reading pencil dosimeters

6.6 The forklift cab shall be equipped with an Emergency Life Support Apparatus (ELSA) unit.

6.7 Prior to beginning operations, fecal samples shall be obtained from overpacking personnel and forklift operators.

6.8 Unless otherwise specified by ES&H, one of the overpacking personnel shall wear a breathing zone air monitor.

6.9 All personnel shall enter the overpacking area through the controlled access where name, date, and time entering/leaving shall be recorded.

6.10 An RWP shall be obtained and posted at the beginning of each shift.

6.11 A pallet shall not contain more than four 55-gallon drums or two 85-gallon drums.

6.12 Pallets shall not be stacked.

6.13 Personnel working on drum/container transfer and accountability shall wear a pocket dosimeter and a TLD.

6.14 Spills of material shall be contained immediately.

OSR> 6.15 Personnel involved in overpacking shall be medically certified.

6.0 INDUSTRIAL HEALTH AND SAFETY REQUIREMENTS (cont.)

OSR> 6.16 Emergency response and spill clean-up equipment shall be available in a marked and unobstructed area in vicinity of the overpacking operation.

OSR> 6.17 Overpacking operations outside the building shall be suspended for the following:

(A) after an announced weather alert
(B) when constant wind velocity exceeds 40 mph
(C) during rain when puddles develop
(D) when an ETI shows that the temperature is less than 35 degrees F
(E) when atmospheric conditions are extremely stable (Class E and F stabilities)
(F) when air samples exceed 100 times the DAC

OSR> 6.18 Three or more of the five high-volume air samplers installed in the thorium metal overpacking area shall be operational during the process.

OSR> 6.19 A diphenylmethane 4, 4'diisocyanate (MDI) detector with an alarm shall be installed and operating while the foam machine is operating or MDI is being transferred to or from foam tanks.

OSR> 6.20 An individual six-pack shall only contain 55- or 85-gallon drums.

OSR> 6.21 If a transfer box has a deteriorated drum inside, a six-pack may contain the box and one 85-gallon drum, the box and two 55-gallon drums, or two transfer boxes.

OSR> 6.22 Drums/containers of pyrophoric or RCRA material shall not be placed in six-packs.

OSR> 6.23 Operators shall be equipped with a two-way communications device.

OSR> 6.24 In case of failure of the two-way communications system, operations shall be suspended until service is restored.

OSR> 6.25 Filled and sealed overpacks shall not be removed from the area until a smear survey for external contamination has been performed.

OSR> 6.26 Building doors (except overpacking area access doors for personnel and the forklift) and windows in the overpacking area shall be closed and sealed.

6.27 A surface contamination test shall be performed after overpacking shutdown and prior to resuming activities without respirators.

6.28 Forklift operators shall perform a full-body frisk before each entry into the cab.

6.29 Spotters shall wear a PAPR while in the overpacking area.

6.0 INDUSTRIAL HEALTH AND SAFETY REQUIREMENTS (cont.)

6.30 Spotters shall remain in the area only while a drum is being removed from stack and lowered.

6.31 In case of problems in removing and/or lowering a drum, spotters shall observe time and distance precautions specified by ES&H.

OSR> 6.32 The robing technique procedure posted by Radiological Safety shall be followed when putting on personal protective equipment (PPE).

6.33 Any situation which could have resulted in the inhalation, ingestion, or absorption of a hazardous material shall immediately be reported to a Supervisor or to the Assistant Emergency Duty Officer (AEDO), who will immediately report the circumstances to Medical and Industrial Hygiene. The involved personnel shall be directed by the Supervisor or AEDO as to when and where to report for medical evaluation, completion of an Incident Investigation Report (IIR) (Form No. FMPC-IRS&T-1458), and submitting bioassay samples (e.g. blood, urine). Employees are responsible for complying with any additional requirements as specified by ES&H.

6.34 Any circumstance which could have resulted in an intake of radioactive materials by inhalation, ingestion, or absorption shall immediately be reported to a Supervisor. The Supervisor shall immediately report the circumstance of possible radioactive materials intake to ES&H Radiological Control Department for evaluation. When the suspect isotope is uranium, the involved personnel shall report to the Urine Sampling Station at the end of their shift to complete an Incident Investigation Report (IIR) (Form No. FMPC-IRS&T-1458), and submit an incident urine sample. The involved personnel shall also report to the Urine Sampling Station at the start of their next shift to submit a follow up urine sample. When the suspect isotope is other than uranium, the involved personnel shall report to the determination of actions. Employees are responsible for complying with additional requirements as specified by the Radiological Control Section.

7.0 GENERAL

7.1 Warnings, Cautions, and Notes precede the Item or Step to which they apply.

OSR> 7.2 A HERCULITE pathway shall be spread on the ground from the drum stack to the west door of the overpacking area in Building 64.

OSR> 7.3 The operator of the forklift shall keep the container being transported above the HERCULITE pathway.

7.4 At least three personnel shall be in the area at all times. Two operators and one supervisor are required to suit up.

8.0 PROCEDURE

WARNING:

Personnel shall wear the required Personal Protective Equipment, including airline respirator, while performing check and startup procedures.

NOTE 1: Two operators and a supervisor shall be in the area while checks and startup is being performed.

NOTE 2: Operational checks for overpacking equipment shall be performed at the start of each day of operation.

8.1 System Checks and Startup

OPERATOR/FORKLIFT DRIVER

OSR> 8.1.1 Prior to starting checks, complete the applicable checklist as follows:

OPERATOR

8.1.1.1 Complete Checklist No. 1, "Daily Checklist for Air Breathing System Start-up," (See Figure 1).

FORKLIFT DRIVER

8.1.1.2 Complete Checklist No. 2, "Start-up and Operational Requirements for the Shielded Forklift Truck Daily Checklist" (See Figure 2).

OPERATOR

NOTE: At least one operator shall wear a breathing zone air monitor during overpacking operations.

OSR> 8.1.2 Wearing an air supplied hood with the airline connected and required protective clothing, enter the work area per posted instructions at the entrance.

8.1.3 Adjust the air pressure according to instructions posted at the local airline stations.

WARNING:

Personnel shall exit the area immediately if the air purification system and the carbon monoxide monitor inside the area are not operating properly.

OSR> 8.1.4 Complete Checklist No. 3, "Daily Checklist for Air Purification System Start-up" (See Figure 3).

8.1.4.1 Notify the supervisor of any damage/malfunctions.

0808

8.0 PROCEDURE (cont.)

WARNING:

Do not turn off the MDI unit. Turning off the unit will erase the program which contains the set points for sampling and alarm.

OSR> 8.1.5 Perform an operational check of the MDI monitor (during any period that the foam machine is being used or MDI is being transferred to or from the foam tanks) as follows:

8.1.5.1 Check for loose wires, dents, or other evidence of damage to the unit.

NOTE: Gas concentrations will be displayed alternately with the percentage of tape left on the tape cassette. If no malfunction is present, the "System OK" symbol will be displayed in the lower left hand corner of the screen. A new gas concentration will be displayed approximately every 4 minutes.

8.1.5.2 Check the icon symbols being displayed on the screen. If any symbol other than "System OK" is displayed, notify the supervisor.

8.1.6 Turn on the computer system.

8.1.7 Load the thorium overpacking equipment checklists on the computer.

WARNING:

If non-acceptable conditions are determined during inspection, the hoist/crane shall not be used.

NOTE: Hoists/cranes shall be inspected at the start of each shift-of-use.

OSR> 8.1.8 Inspect hoists/cranes to be used Per SOP 1-C-916.

OSR> 8.1.9 Start the Conveyor System per the "Conveyor System Startup Checklist" (See Figure 4).

8.1.10 Start the Gamma and Background Scanner System per the "Radiological Detection Equipment (Alpha, Gamma, and Background Probe) Daily Checklist" (See Figure 5).

OSR> 8.1.11 Start the CCTV system per the "CCTV Daily Operation Checklist" (See Figure 6).

OSR> 8.1.12 Perform startup of the Mobile Shield Wall system per the "Mobile Shield Wall Operational and Startup Checklist" (See Figure 7).

8.1.13 Open the door on the Mobile Shield Wall.

8.0 PROCEDURE (cont.)

FORKLIFT DRIVER

8.1.14 Using the forklift, move a six-pack container behind the Mobile Shield Wall.

OPERATOR

8.1.15 Manually remove the lid from the six-pack.

8.1.16 Place the lid in the storage location.

8.1.17 Add approximately two-inches of uncalcined diatomaceous earth to the bottom of the six-pack.

8.1.18 Shut the door on the Mobile Shield Wall.

8.1.19 Place the transfer box sling on the jib crane hook.

8.1.20 If an 85-gallon drum is to be used as the overpack, proceed as follows:

8.1.20.1 Remove the locking ring and lid from the drum.

8.1.20.2 Place at least two inches but not more than three inches of uncalcined diatomaceous earth in the drum bottom.

8.1.20.3 Place the lid on the drum.

8.1.20.4 Secure the lid with the locking ring.

FORKLIFT DRIVER

8.1.20.5 Using the forklift, move the 85 gallon drum to the conveyor at the scale location.

OPERATOR

8.1.20.6 Record the tare weight of the drum.

FORKLIFT DRIVER

8.1.20.7 Move the 85 gallon drum from the conveyor to the staging area.

OPERATOR

NOTE: Tare weights (where possible) of containers placed in the 85 gallon overpacks, or best estimates, shall also be included in the total tare weight.

8.1.20.8 Label the overpack container with the total tare weight of the drum(s).

8.1.21 Compare the readings on the gamma scanner and the background scanner.

8.0 PROCEDURE (cont.)

8.1.21.1 If the readings are not the same, use the gamma scanner reading as t background reading for the operation.

NOTE: One operator shall operate the remote control CCTV and track the drum as it enters the building and is placed on the conveyor.

8.2 Removal of the Drums from the Stack

FORKLIFT DRIVER

8.2.1 Using the forklift, move a transfer box from the staging area to the thorium drum storage area.

8.2.2 Place the transfer box on its side on the ground in a convenient place to accept the drum to be loaded.

8.2.3 Visually, using the cab windows and the forklift mounted CCTV, inspect the drum to be removed from the stack.

8.2.4 Report visible identification markings and the physical condition of the drum to the console operator.

8.2.5 If the drum cannot be handled safely or if the drum cannot be moved without loss of contents, notify the supervisor.

SUPERVISOR

8.2.6 Visually inspect the condition of the drum.

8.2.6 Take appropriate action based on drum condition.

8.2.7 Document action taken.

FORKLIFT DRIVER/OPERATOR

NOTE: A forklift may be used when a sling is not required.

8.2.8 Remove the drum per Step 8.2.9 (forklift) or Step 8.2.10 (sling).

CAUTION:

Use care when moving the drum from the stack to the transfer box to avoid spills.

NOTE: A spotter shall be positioned to direct the MVO while the drum is removed from the stack.

8.2.9 Using the forklift, move the drum as follows:

8.2.9.1 Maneuver the forklift until the drum is positioned on the forks.

8.2.9.2 Lift the drum off of the stack.

8.0 PROCEDURE (cont.)

8.2.9.3 Back the forklift from the stack.

8.2.9.4 Lower the drum to one-foot above floor level.

8.2.9.5 Move the drum to the Transfer Box.

OPERATOR/FORKLIFT DRIVER

8.2.10 Using a sling, proceed as follows:

OPERATOR

NOTE: Two operators, one at each end of the drum, are required to attach the sling.

8.2.10.1 Using a choker hold, attach a sling to each end of the drum.

FORKLIFT DRIVER

8.2.10.2 Raise the fork above the drum.

8.2.10.3 Position the forklift so that one fork is over the center of the drum.

OPERATOR

8.2.10.4 Attach the slings to the fork above the drum.

FORKLIFT DRIVER

WARNING:

All personnel shall remain clear of the drum while it is suspended.

8.2.10.5 Lift the drum.

8.2.10.6 Move the drum to the Transfer Box.

OPERATOR

8.2.10.7 Remove the slings from the drum and the fork.

FORKLIFT DRIVER

8.2.11 Using the forklift, lift the drum.

8.2.12 Place the drum in the transfer box.

8.2.13 Tilt the forks forward.

8.2.14 Reverse the forklift to leave the drum in the transfer box.

0869

8.0 PROCEDURE (cont.)

8.2.15 Return the forklift to the staging area.

OPERATOR

8.2.16 Install the drum handling attachment on the forks.

8.2.17 At the stack area, fasten the drum handling attachment to the transfer box.

FORKLIFT DRIVER

8.2.18 Lift the transfer box.

8.2.19 Rotate the transfer box to the vertical position.

8.2.20 Transport the transfer box and drum to the drum handling area.

8.2.21 Place the transfer box and drum on the conveyor, centered as close as possible on the belt, and just south of the north photo-electric detector (Stage 1).

8.3 Identification of the Drum and Contents

OPERATOR

8.3.1 Turn the key on the conveyor control panel to FORWARD.

8.3.2 Press and hold the two red index buttons on the panel until the indicator lights on the panel show that the drum is at the scale location (stage two).

OSR> NOTE: The actual weight of the drum, as determined from the scale, shall be within 10 percent (plus or minus) of the weight as determined from the inventory records, to use the inventory records as a source of identifying the material within the drums.

8.3.3 Record the weight of the transfer box and drum.

8.3.4 Subtract the tare weight of the transfer box from the gross weight.

8.3.5 Input the drum weight and drum size into the computer screen.

8.3.6 Press and hold the two conveyor index buttons until the stage three indicator lights.

8.3.7 Extend the gamma probe by placing the gamma switch on the detector control panel to OUT.

8.3.8 When the gamma probe "stand off" contacts the drum, place the gamma switch to OFF.

8.0 PROCEDURE (cont.)

8.3.9 After 20 seconds for the reading to stabilize, enter the gamma and background scanner (or previously recorded gamma scanner reading) information into the computer.

8.3.10 Press and hold the two conveyor index buttons until the Stage 5 indicator lights.

NOTE: MC&A personnel shall provide assistance as required.

8.3.11 Using the CCTV, inspect the drum for external markings or other information that may assist in the identification of the contents of the drums.

NOTE 1: The input of drum data will identify the material and determine handling requirements.

NOTE 2: Drums shall be handled as containing potentially pyrophoric thorium until identified.

8.3.12 Enter the information from the drum into the computer prompted data base system.

8.3.13 Enter CONTINUE into the computer for the following:

(A) an analysis of the type of drum material on the conveyor
(B) drum designation
(C) if the drum can be overpacked
(D) packed as a pyrophoric
(E) sampled to determine if the drum contains RCRA material
(F) or require further information for determination of the type of material in the drum.

FORKLIFT DRIVER

8.3.14 Move the drum to the location that is designated by the computer.

OPERATOR

NOTE: MC&A shall provide drum or six-pack label.

8.3.15 Enter drum location data into the computer.

NOTE: The computer will identify the next action as six-pack overpack, (Item 8.4), Argon filled 85-gallon drum, (Item 8.5), or 85-gallon overpack and hold (potential RCRA) Item (8.6).

8.3.16 Proceed as specified by the computer.

8.0 PROCEDURE (cont.)

NOTE 1: A six-pack overpack may contain six 55-gallon drums, three 85-gallon drums, two transfer boxes, two 55-gallon drums and one transfer box, or one 85-gallon drum and one transfer box.

NOTE 2: No drum or container shall be placed into a six-pack until the material has been positively identified as non-pyrophoric and identified as non-RCRA.

NOTE 3: Some drums may present lifting problems due to corrosion. If the Supervisor determines that a 55-gallon drum cannot be safely removed from the transfer box, if while removing a 55-gallon drum the lid tears off, or the bottom of the drum and the containers are left in the transfer box, appropriate actions shall be taken to contain the material.

8.4 Overpacking Non-Pyrophoric Drums In A Six-Pack

OPERATOR

8.4.1 Inspect the crane per the "Crane Daily Operator Checklist" (See Figure 8).

8.4.2 Manually attach the transfer box sling on the jib crane to the lifting eyes on the transfer box.

8.4.3 Using the jib crane, lift the transfer box to clear the RCRA shield wall.

8.4.4 Move the transfer box over the RCRA shield wall.

8.4.5 Lower the transfer box behind the RCRA shield wall.

8.4.6 Unhook the transfer box sling from the transfer box.

8.4.7 Remove the transfer box sling from the jib crane hook.

8.4.8 Attach the external drum lifter (positioned to accept 55 gallon drums) to the crane hook.

NOTE: The lifter shall be positioned so that the closed jaws are between the lid and the top chime.

8.4.9 Position the external drum lifter around the top of the drum.

8.4.10 Actuate the lifter to the closed position.

8.4.11 Using the CCTV System, check that lifter is securely engaged.

8.4.11.1 Open and reposition the jaws as necessary to engage the drum between the lid and the top most chime.

8.4.12 Lift the drum above the mobile shield wall.

6989

8.0 PROCEDURE (cont.)

8.4.13 Rotate crane to move the drum over the mobile shield wall.

8.4.14 Lower the drum into the six-pack.

8.4.15 Position the drum as required.

8.4.16 Release the external drum lifter from the drum.

8.4.17 Raise the hoist and rotate the crane to the conveyor.

8.4.18 Repeat steps 8.4.1 through 8.4.16 to place five more 55-gallon drums into the six-pack.

8.4.19 Record, in the computer, the number of drums, placement in the six-pack.

8.4.20 Assign a six-pack number.

8.4.21 Label the six-pack with the assigned number.

8.4.22 Complete an "Item Production/Certification/Identification" card packet, Form FS-F-1945-XX (See Figure 9) for each drum placed in the six-pack.

8.4.23 Complete a 1945-XX card for the six-pack.

8.4.24 Generate two computer hard copies of the six-pack inventory.

8.4.25 Give copies of the six-pack inventory and all copies of the cards (65, 66, and XX) to the supervisor.

SUPERVISOR

8.4.26 Give copies of the inventory to Waste Certification and MC&A.

8.4.27 Give copies of all cards to MC&A.

OPERATOR

8.4.28 Disconnect the drum handling attachment from the crane hook.

8.4.29 Manually replace the six-pack lid.

8.4.30 Secure the six-pack lid with strapping.

8.4.31 Open the mobile shield wall door.

FORKLIFT DRIVER

8.4.32 Using the forklift, remove the six-pack.

8.0 PROCEDURE (cont.)

OPERATOR

8.4.33 Notify the supervisor that the six-pack is ready to be moved to storage.

SUPERVISOR

8.4.34 Notify Radiological Safety that a six-pack requires a smear test.

FORKLIFT DRIVER

NOTE: The filled, sealed six pack shall not be removed from the building until a smear survey indicates that alpha and beta gamma are below ES&H requirements for release.

8.4.35 Move the six-pack to the north storage bay.

8.5 Overpacking Drums of Pyrophoric Metals

OPERATOR

8.5.1 Manually attach the transfer box sling on the jib crane to the lifting eyes on the transfer box.

8.5.2 Using the jib crane, lift the transfer box to clear the RCRA shield wall.

8.5.3 Move the transfer box over the RCRA shield wall.

8.5.4 Lower the transfer box behind the RCRA shield wall.

8.5.5 Unhook the transfer box sling from the transfer box.

8.5.6 Remove the transfer box sling from the jib crane hook.

8.5.7 Open the drum closure lever.

WARNING:

Use only non-sparking tools to remove the sealing ring and lid from drums.

8.5.8 Unbolt the sealing ring and remove the lid from the drum.

8.5.9 Determine the type of container in the box.

8.5.10 Attach the appropriate lifting device to the crane hook.

8.5.11 Attach the lifting device to a container.

8.5.12 Move the containers to the RCRA sampling table.

8.5.13 Repeat Steps 8.5.10 thru 8.5.12 for the other containers in the box.

8.0 PROCEDURE (cont.)

8.5.14 Record the tare weights of the containers.

NOTE: If the 55 gallon drum contains only a 30 gallon drum, the 30 gallon drum need not be removed.

8.5.15 Open the container(s).

8.5.16 Insert the hose from the portable argon cart into the container(s).

8.5.17 Open argon bottle outlet valve and flush the container(s) with argon for 2 minutes.

NOTE 1: Composite samples shall not be taken. Each container shall be sampled and analyzed separately.

NOTE 2: Any sample taken whether for pyrophoric or RCRA determination shall follow chain of custody guidelines in accordance with SOP 1-C-101.

NOTE 3: Any deviation from procedure SOP 1-C-101 for chain of custody or labeling shall be documented on a "Sampling Deviation/Special Handling Requirements" Form FMPC-PRO-3130.

NOTE 4: Scoop sampling shall be performed.

8.5.18 Sample the inner container(s) per SOP 1-C-101.

CAUTION:

Place the cap on container inside the drum to prevent air from oxidizing the material.

8.5.19 Cap the sample container in the drum being sampled.

NOTE: An RST shall survey the exterior of the sample containers before putting containers in the pig.

8.5.20 Request a survey of the container.

8.5.21 Using the hoist, place the sample containers in the portable pig.

NOTE: The supervisor shall arrange for Transportation to move the pig.

8.5.22 Notify the supervisor that the portable pig is ready for delivery to Analytical for analysis.

FORKLIFT DRIVER

8.5.23 Using a forklift and manipulator, move a prepared and tare weighed 85-gallon drum from the storage area to a tarp that has been placed on the floor just east of the transfer box.

8.0 PROCEDURE (cont.)

OPERATOR

8.5.24 Remove the lid from the 85-gallon drum.

8.5.25 Using the crane, pick up each container from the RCRA sampling table or the 55-gallon drum (containing a 30-gallon drum) from the transfer box.

8.5.26 Using the jib crane and CCTV, center the container over the 85-gallon drum.

8.5.27 Lower the container into the 85-gallon drum.

8.5.28 Release the container.

8.5.29 Move the remaining containers from the 55 gallon drum into an 85-gallon drum.

8.5.30 Bolt a pyrophoric drum lid and sealing ring on the 85-gallon drum.

8.5.31 Move the drum to the scale.

OPERATOR

8.5.32 Weigh the drum.

NOTE: Include tare weights marked on inner containers (or best estimate) in the total tare weight for the overpack label.

8.5.33 Fill out a label for the overpack container.

FORKLIFT DRIVER

8.5.34 Pick up the drum as close to the bottom of the drum as possible using the forklift and drum handling attachment.

8.5.35 Transport the drum to the pyrophoric storage location.

8.5.36 Position the drum so that the drum ID label and the pressure gage are visible from one of the CCTV systems.

8.5.37 Visually inspect the drum lid seal for continuity and proper installation.

OPERATOR

8.5.38 Attach the Argon Fill Line to the Inlet Valve on the drum lid.

NOTE: Except for purging additional drums, the valves, with Argon Fill File attached, shall remain open while purge is required.

8.5.39 Open both Inlet and Outlet Valves on the drum lid.

8.5.40 Open the Outlet Valve on the Argon Manifold.

6989

8.0 PROCEDURE (cont.)

8.5.41 Purge the drum for three minutes and close the outlet valve on the drum.

OSR> 8.5.42 Insert a syringe needle through the EPDM sample port.

OSR> 8.5.43 Draw a 10cc gas sample into the syringe body.

OSR> 8.5.44 Close the syringe valve at the needle.

OSR> 8.5.45 Open the sample cylinder front valve.

NOTE: The drum shall be allowed to purge for 30 seconds.

OSR> 8.5.46 After 30 seconds, close the back valve.

OSR> 8.5.47 Install the end plug.

NOTE: The pressure gage on cylinder and drum should have same reading to ensure that a sample was obtained.

OSR> 8.5.48 Observe the pressure gage on the drum and sample cylinder. When the pressure drops to 1-1/2 lbs, close the sample cylinder front valve.

OSR> 8.5.49 Close the sample valve.

OSR> 8.5.50 Open the quick disconnect.

OSR> 8.5.51 Separate the sample cylinder from the drum.

OSR> 8.5.52 Attach the argon line to the drum and fill the drum with argon until the drum pressure gage reads 2-1/2 lbs.

8.5.53 Attach A "Sample Label", Form FMPC-PRO-306 (See Figure 10) to the sample cylinder.

8.5.54 Complete a "Report of Chemical Analysis," Form FMPC-T-200 (See Figure 11) requesting percent O_2.

8.5.55 Submit sample cylinder and analysis form to the Analytical Laboratory for analysis.

8.5.56 Record the percent O_2 reading and drum data in the "Inventory of pyrophoric materials" computer subprogram.

NOTE: If the oxygen level is below 0.5 percent total mixture, the overpack passes the overpacking process.

8.5.56.1 If there is more oxygen than 0.5 percent, repeat Steps 8.5.41, thru 8.5.52.

8.5.56.2 Continue twice through this process.

8.5.56.3 If the required oxygen level is not obtained, notify the supervisor.

8.0 **PROCEDURE** (cont.)

8.5.57 Remove the mechanical drum lifter from the jib crane.

8.5.58 Attach the transfer box sling to the jib crane hook.

8.5.59 Manually attach the transfer box sling to the lifting eyes on the transfer box.

8.5.60 Move the transfer box to the conveyor.

8.5.61 Unhook the transfer box sling from the transfer box.

FORKLIFT DRIVER

8.5.62 Using the forklift move the transfer box to the staging area.

NOTE: The tare weight of the empty 55 gallon drum shall be determined, if intact, to aid in the determination or verification of the total tare and/or net weight.

OPERATOR

8.5.63 Weigh the empty 55-gallon drum.

8.5.64 Properly dispose of the empty 55 gallon drum.

OSR> 8.5.65 Initiate daily inspections and bi-weekly sampling of drums per Items 8.6 and 8.7.

OSR> 8.6 Daily Inspection Requirements

8.6.1 Inspect drums for bulging or damage.

8.6.1.1 Notify the supervisor of discrepancies.

NOTE: The pressure gauge is located on the Regulator.

8.6.2 Check the Argon Supply Bottle pressure.

8.6.2.1 If the pressure is 250 (± 25) psi, change the bottle.

8.6.3 Record the drum location and pressure in the computer using the "Inventory of Pyrophoric Materials" computer subprogram.

OSR> 8.7 Bi-weekly Sampling Requirements

8.7.1 Complete Item 8.6.

8.7.2 Using a syringe, obtain a 10cc sample from each drum.

8.7.3 Have the sample analyzed to ensure that the drums contain a maximum of 0.5% oxygen.

8.0 PROCEDURE (cont.)

8.7.4 If the oxygen content exceeds 0.5%, repeat Steps 8.5.41 thru 8.5.52.

8.7.5 Record all data into the "Inventory of Pyrophoric Materials" computer subprogram.

8.8 Handling Material after Sampling

FORKLIFT DRIVER/OPERATOR

NOTE: If the laboratory analysis confirms the material is pyrophoric, storage shall continue until disposition can be made.

8.8.1 If the lab analysis confirms the material is not pyrophoric and not RCRA, proceed as follows:

FORKLIFT DRIVER

8.8.1.1 Using the forklift, remove the drum from the storage area.

OPERATOR

8.8.1.2 Vent the pressure from the drum.

8.8.1.3 Replace the pyrophoric drum lid with a plain 85-gallon lid.

NOTE 1: The supervisor shall notify Radiological Safety that the drum requires a smear test.

NOTE 2: The drum shall meet the requirements specified by ES&H prior to being moved.

8.8.1.4 Notify the supervisor that the drum is ready to be moved.

FORKLIFT DRIVER

OSR> NOTE: The sealed 85-gallon drums are stored in the north bay until a filled six pack of 55-gallon drums has been removed from the mobile shield storage area, and three or more 85-gallon drums have accumulated.

8.8.1.5 Using the forklift, move the drum to a storage area in the north bay of Building 64.

FORKLIFT DRIVER/OPERATOR

8.8.2 If the lab analysis indicates the material is RCRA, proceed as follows:

FORKLIFT DRIVER

8.8.2.1 Using the forklift, remove the drum from the storage area.

8.0 PROCEDURE (cont.)

OPERATOR

8.8.2.2 Vent the pressure from the drum.

8.8.2.3 Replace the pyrophoric drum lid with a plain 85-gallon lid.

NOTE 1: The supervisor shall notify Radiological Safety that the drum requires a smear test.

NOTE 2: The drum shall meet the requirements specified by ES&H prior to being moved.

8.8.2.4 Notify the supervisor that the drum is ready to be moved.

FORKLIFT DRIVER

8.8.2.5 Using the forklift, place the drum in the appropriate RCRA Storage Area.

8.9 Overpacking (85-gallon) and Holding Potential RCRA Material

OPERATOR

8.9.1 Manually attach the transfer box sling on the jib crane to the lifting eyes on the transfer box.

8.9.2 Using the jib crane, lift the transfer box to clear the RCRA shield wall.

8.9.3 Move the transfer box over the RCRA shield wall.

8.9.4 Lower the transfer box behind the RCRA shield wall.

8.9.5 Unhook the transfer box sling from the transfer box.

8.9.6 Remove the transfer box sling from the jib crane hook.

8.9.7 Attach the mechanical drum lifter to the crane hook.

8.9.8 Open the drum closure lever.

WARNING:

Use only non-sparking tools to remove the sealing ring and lid from drums.

8.9.9 Unbolt the sealing ring and remove the lid from the drum.

8.9.10 Determine the type of containers in the overpack.

8.9.11 Attach the appropriate lifting device to the jib crane hook.

8.0 PROCEDURE (cont.)

NOTE: If the 55-gallon drum contains only one 30-gallon drum, the 30-gallon drum need not to be removed.

8.9.12 Move the inner containers to the RCRA sampling table.

NOTE 1: Composite samples shall not be taken.

NOTE 2: Any sample taken, whether for pyrophoric or RCRA determination shall follow chain-of-custody guidelines in accordance with SOP 1-C-101.

NOTE 3: Scoop sampling shall be performed.

8.9.12 Sample the inner containers per SOP 1-C-101 and the following:

8.9.12.1 If there is only one container in the drum, take two separate samples from the container.

8.9.12.2 Label the sample with the same lot number.

8.9.12.3 If the drum contains multiple containers, take one sample from each container.

8.9.12.4 Label the sample as part of the same lot number.

8.9.13 Replace lids on container(s) to prevent air from oxidizing sample.

8.9.14 Place the samples in specimen containers.

NOTE: An RST shall survey the exterior of the sample containers before the container is placed in pig.

8.9.15 Request a survey of the container.

8.9.16 Place the sample containers in the portable pigs.

NOTE: The supervisor shall arrange to have Transportation move the pigs.

8.9.17 Notify the supervisor that the portable pig is ready for transfer to the Analytical Laboratory for analysis.

FORKLIFT DRIVER

8.9.18 Using the forklift and manipulator, move a prepared and tare weighed 85-gallon drum from the storage area to a tarp that has been placed on the floor just east of the transfer box.

8.0 **PROCEDURE** (cont.)

OPERATOR

NOTE 1: Include tare weights marked on inner containers (or best estimate) in the total tare weight for the overpack label.

NOTE 2: The tare weight of the empty 55-gallon drum shall be determined, if intact, to aid in the determination or verification of the total tare and/or net weight.

8.9.19 Label the 85-gallon drum.

8.9.20 Remove the lid from the 85-gallon drum.

8.9.21 Using the jib crane and CCTV, move a container from the RCRA sampling table or the 55-gallon drum (containing a 30-gallon drum) from the transfer box to the 85-gallon drum.

8.9.22 Lower the container or drum into the 85-gallon drum.

8.9.23 Release the crane.

8.9.24 Repeat Steps 8.9.20 thru 8.9.23 for all containers or drums to be moved.

8.9.25 Install a drum lid on the 85-gallon drum.

8.9.26 Bolt the sealing ring on the drum.

NOTE 1: The supervisor shall notify Radiological Safety that the drum requires a smear test.

NOTE 2: The drum shall meet the requirements specified by ES&H prior to being moved.

8.9.27 Notify the supervisor that the drum is ready to be moved.

FORKLIFT DRIVER

8.9.28 Using the forklift, move the drum to the interim satellite storage location.

OPERATOR

OSR> **NOTE**: The sealed 85-gallon drums shall be stored in the North Bay until filled six-pack of 55-gallon drums have been removed from the mobile shield storage area, and three or more 85-gallon drums have accumulated.

8.9.29 If the lab analysis confirms the material is not RCRA, attach a drum lifter to the jib crane.

8.2.30 Using the crane, move the drum from the interim satellite storage location to the storage location for 85-gallon drums waiting overpacking.

8.0 PROCEDURE (cont.)

8.9.31 Remove the mechanical drum lifter from the jib crane.

8.9.32 Attach the transfer box sling to the jib crane hook.

8.9.33 Manually attach the transfer box sling to the lifting eyes on the transfer box.

8.9.34 Move the transfer box to the conveyor.

8.9.35 Unhook the transfer box sling from the transfer box.

FORKLIFT DRIVER

8.9.36 Using the forklift, move the transfer box to the staging area.

8.9.37 Properly dispose of the empty 55-gallon drum.

NOTE: A lidded transfer box may be stored in the north bay until the box can be appropriately added to an overpack box.

8.10 Overpacking Transfer Boxes

8.10.1 Weigh a transfer box and lid.

NOTE: Tare weight of the transfer box (with lid) as well as the drum tare weight (if indicated, or best estimate) shall be recorded.

8.10.2 Record the transfer box weight (ON WHAT???)

8.10.3 Place the lid on the transfer box.

NOTE 1: The supervisor shall notify Radiological Safety that the box requires a smear test.

NOTE 2: The box shall meet the requirements specified by ES&H prior to being moved.

8.10.4 If the transfer box is to be moved to an interim storage location, notify the supervisor that the lid is on the box.

8.10.5 If the transfer box is to be loaded into a six-pack, place the transfer box sling on the jib crane hook.

8.10.6 Attach the transfer box sling to the lifting eyes on the transfer box.

8.10.7 Lift the transfer box to clear the mobile shield wall.

8.10.8 Move the transfer box over the mobile shield wall.

8.10.9 Lower the transfer box into the six pack.

8.10.10 Unhook the transfer box sling from the transfer box.

8.0 **PROCEDURE** (cont.)

8.10.11 Repeat steps 8.10.1 through 8.10.10 and place another transfer box into the six-pack.

8.10.12 Enter the number of drums moved and the placement in the six-pack in the computer.

8.10.13 Assign a six-pack number.

8.10.14 Label the six pack.

8.10.15 Complete an "Item Production/Certification/Identification" card packet, Form FS-F-1945-XX, (See Figure 9) for each drum placed in the six-pack.

8.10.16 Prepare an addition 1945-XX card packet for the six-pack.

NOTE: The supervisor shall notify Waste Certification personnel (QA) that the six-pack is full and is ready to be sealed.

8.10.17 Inform the supervisor that the six-pack is ready to be sealed.

8.10.18 Generate two computer hard copies of the six-pack inventory.

8.10.19 Give the copies of the six-pack inventory and all copies of the 1945-XX cards to the supervisor.

SUPERVISOR

8.10.20 Give a copy of the inventory to Waste Certification.

8.10.21 Give a copy of the inventory cards to MC&A.

FORKLIFT DRIVER

8.10.22 Drive the forklift to the staging area.

8.10.23 Disconnect the drum handling attachment.

OPERATOR

8.10.24 Manually replace the six-pack lid.

8.10.25 Secure the six-pack lid with strapping.

8.10.26 Open the mobile shield wall door.

FORKLIFT DRIVER

8.10.27 Using the forklift, remove the six-pack.

8.0 PROCEDURE (cont.)

NOTE 1: The supervisor shall notify Radiological Safety that the six-pack requires a smear test.

NOTE 2: The six-pack shall meet the requirements specified by ES&H prior to being moved.

OPERATOR

8.10.28 Notify the supervisor that the six-pack is ready to be moved.

FORKLIFT DRIVER

8.10.29 Transport the six-pack to the north storage bay.

OSR> NOTE: Sealed 85-gallon drums shall be stored in the North Bay until a filled six pack of 55-gallon drums is removed from the mobile shield storage area and three or more 85-gallon drums have accumulated.

8.11 Overpacking 85-Gallon Drums

NOTE 1: The supervisor shall notify Radiological Safety that a drum requires a smear test.

NOTE 2: The drum shall meet the requirements specified by ES&H prior to being moved.

OPERATOR

8.11.1 Notify the supervisor that the drum is ready to be moved.

FORKLIFT DRIVER

8.11.2 Install drum handling attachment on the forklift.

8.11.3 Move an 85-gallon drum from the storage area to a position behind the RCRA shield wall.

OPERATOR

8.11.4 Attach the external drum lifter (positioned to accept 85-gallon drums) to the jib crane.

NOTE: The lifter shall be positioned so that the closed jaws are between the lid and the top chime.

8.11.5 Position the external drum lifter around the top of the drum.

8.11.6 Actuate the lifter to the closed position and use the CCTV system to check jaw engagement.

8.11.6.1 Open and reposition the jaws as necessary to engage the drum between the lid and the top most chime.

8.0 PROCEDURE (cont.)

8.11.7 Lift the drum to clear the mobile shield wall.

8.11.8 Move the drum over the mobile shield wall.

8.11.9 Lower the drum into the six pack.

8.11.10 Release the external drum lifter from the drum.

8.11.11 Repeat steps 8.11.1 through 8.11.10 to place two more 85-gallon drums into the six-pack.

8.11.12 Enter, in the computer, the drums and placement in the six-pack.

8.11.13 Assign a six-pack number.

8.11.14 Label the six pack.

8.11.15 Complete an "Item Production/Certification/Identification" card packet, Form FS-F-1945-XX (See Figure 9) for each drum placed in the six-pack.

8.11.16 Complete a 1945-XX card packet for the six- pack.

NOTE: The supervisor shall notify Waste Certification personnel (QA) that the six-pack is full and is ready to be sealed.

8.11.17 Inform the supervisor that a six-pack is full.

8.11.18 Generate two computer hard copies of the six-pack inventory.

8.11.19 Give a copy of the six-pack inventory and all copies of the 1945-XX form to the supervisor.

SUPERVISOR

8.11.20 Give a copy of the inventory to Waste Certification.

8.11.21 Give a copy of the inventory and cards to MC&A.

FORKLIFT DRIVER

8.11.22 Drive the forklift to the staging area.

8.11.23 Disconnect the drum handling attachment.

OPERATOR

8.11.24 Manually replace the six-pack lid.

8.11.25 Secure the six-pack lid with strapping.

8.11.26 Open the mobile shield wall door.

8.0 PROCEDURE (cont.)

FORKLIFT DRIVER

8.11.27 Using the forklift, remove the six-pack.

NOTE 1: The supervisor shall notify Radiological Safety that the six pack requires a smear test.

NOTE 2: The six-pack shall meet the requirements specified by ES&H prior to being moved.

8.11.28 Notify the supervisor that the six-pack is ready to be moved.

8.11.29 Transport the six-pack to the North Storage Bay.

8.12 Emergency Procedures

NOTE 1: In the event of a fire all personnel entering the emergency areas as established by the ERT (for an outdoor fire) or entering/re-entering Building 64 (for an indoor fire) shall use SCBA.

NOTE 2: Supervisors shall remain available to assist the ERT as requested.

8.12.1 Fire at Pick-up Location

OPERATOR

8.12.1.1 Notify the Console Personnel of a fire at the stack.

CONSOLE PERSONNEL

8.12.1.2 Summon the Emergency Response Team (ERT) by pulling a manual fire alarm or dialing extension 6511.

FORKLIFT DRIVER

8.12.1.3 Move the forklift at least 50 feet to a safe upwind area.

ALL PERSONNEL

8.12.1.4 Wait for response units and assist as requested.

OPERATOR

8.12.1.5 Close all doors and windows on west side of Building 64.

SUPERVISOR

8.12.1.6 Evacuate all personnel to the assembly area.

8.0 **PROCEDURE** (cont.)

8.12.2 Fire During Transportation

OPERATOR

8.12.2.1 Notify all personnel of the fire.

CONSOLE PERSONNEL

8.12.2.2 Summon the ERT by pulling a manual fire alarm or dialing extension 6511.

OPERATOR

8.12.2.3 Close all doors and windows on west side of Building 64.

SUPERVISOR

8.12.2.4 Evacuate all personnel to the designated area.

FORKLIFT DRIVER

8.12.2.5 Move the container a safe distance from the stack.

8.12.2.6 Move the vehicle at least 50 feet upwind of the container and wait for the ERT.

8.12.3 Fire During Overpacking or Sampling

OPERATOR

8.12.3.1 Summon the Emergency Response Team by pulling a manual fire alarm or dialing extension 6511.

FORKLIFT DRIVER

8.12.3.2 Stop movement of all drums in transport.

OPERATOR

8.12.3.3 If a load is suspended from the crane, place the load in a safe location.

8.12.3.4 Close all doors and windows.

SUPERVISOR

8.12.3.5 Evacuate all personnel to the designated area.

8.0 PROCEDURE (cont.)

8.12.4 Visual Detection of Fire at the Pyrophoric Drum Storage Area

OPERATOR

8.12.4.1 Summon the Emergency Response Team by pulling a manual fire alarm or dialing extension 6511.

8.12.4.2 Stop movement of all drums in transport.

8.12.4.3 If a load is suspended from the crane, place the load in a safe location.

8.12.4.4 Close all doors and windows.

SUPERVISOR

8.12.4.5 Evacuate all personnel to the designated assembly area.

8.12.5 Electronic Detection of Fire at Storage Location

OPERATOR

8.12.5.1 Upon activation of the alarm stop movement of all drums in transport.

8.12.5.2 If a load is suspended from the crane, place the load in a safe location.

CONSOLE PERSONNEL

8.12.5.3 Remain behind the shield wall and observe the drums for signs of smoke or fire.

8.12.5.4 Look for bulging or deformation in any of the drums.

8.12.5.5 Look for abnormal pressure readings on any of the drum pressure gauges.

ALL OTHER PERSONNEL

8.12.5.6 Evacuate to the designated area.

CONSOLE PERSONNEL

8.12.5.7 Evacuate at the sign of smoke or fire.

OPERATOR

8.12.5.8 Using the CCTV system, observe the drums in pyrophoric storage for signs of smoke or fire from any of the drums, bulging or deformation, or abnormal pressure readings on any of the drum pressure gages.

8.12.5.9 Inform the Emergency Response Team of drums with indications of smoke, bulging or deformation, or abnormal pressure readings.

8.0 PROCEDURE (cont.)

8.12.6 Post Fire Actions

AEDO

8.12.6.1 Authorize reentry to the area.

SUPERVISOR

8.12.6.2 Reactivate the system.

OPERATOR

8.12.6.3 Proceed as directed by the supervisor.

OSR> NOTE: Operations shall not resume until the material has been cleaned up to standards meeting radiological safety requirements, meets the level specified by ES&H and permission to restart has been granted by the AEDO.

8.13 Reacting To Spills

OPERATOR

OSR> 8.13.1 If material spills from a drum and any part of its contents is radioactive, stop movement of all drums in transport.

8.13.2 If a load is suspended from the crane, place the load in a safe location.

8.13.3 Notify the supervisor (or AEDO through the communications Officer in the absence of the supervisor).

8.13.4 Remove non-pyrophoric spills as follows:

8.13.4.1 Cover the spilled material with a piece of HERCULITE, or equivalent, to reduce the potential for thorium dispersal.

OSR> 8.13.4.2 Using a scoop shovel and HEPA filtered vacuum unit, pick up the spilled material.

OSR> WARNING:

Do not use vacuum cleaners to clean up spills of pyrophoric or unidentified materials.

8.13.5 Remove potentially pyrophoric and unidentified materials as follows:

8.13.5.1 Cover the spill with magnesium fluoride.

8.13.5.2 Cover the spill with a piece of HERCULITE, or equivalent, to reduce the potential for a thorium fire and/or thorium dispersal.

8.13.5.3 Using a non-sparking scoop shovel, pick up the bulk material.

8.0 **PROCEDURE** (cont.)

8.13.5.4 Place the material in the appropriate container.

8.13.5.5 Using adhesive material, pick up small pieces.

8.13.5.6 Discard adhesive material in appropriate container.

8.13.6 If material is spilled on HERCULITE, proceed as follows:

8.13.6.1 Using a shovel, pick up bulk material.

NOTE: HERCULITE shall be repaired prior to continuation of work.

8.13.6.2 Cut out the contaminated section of HERCULITE.

8.13.6.3 Fold and discard the HERCULITE in an appropriate container.

9.0 **APPLICABLE FORMS**

9.1 FS-F-1945-XX, "Item Production/Certification/Identification"

9.2 FMPC-T-200, "Report of Chemical Analysis"

9.3 FMPC-PRO-306, "Sample Label"

6989

TABLE 6
HAZARDOUS WASTE COMPATIBILITY CHART

REACTIVITY GROUP CODE (RGC)	REACTIVITY GROUP NAME	COMPATIBLE CODES[1]												
		A	B	C	D	E	F	G	H	I	J	K	L	M
A	Nonignitable organics	O	X	X	X	O	O	X	O	X	X	O	O	X
B	Oxidizing acids	X	O	X	X	X	X	X	X	O	X	X	X	X
C	Nonoxidizing acids	X	X	O	X	X	X	X	X	X	X	X	X	X
D	Caustics and alkaline solutions	X	X	X	O	O	O	X	O	X	X	X	X	X
E	Nitrogen compounds	O	X	X	O	O	O	X	O	X	X	X	X	X
F	Inorganic salts, solutions, and mixtures	O	X	X	O	O	O	X	O	X	X	O	X	X
G	Polymerizable compounds	X	X	X	X	X	X	O	X	X	X	X	X	X
H	Cyanides, sulfides, mercaptans	O	X	X	O	O	O	X	O	X	X	O	X	X
I	Oxidizers	X	O	X	X	X	X	X	X	O	X	X	X	[illegible]
J	Water reactives	X	X	X	X	X	X	X	X	X	O	X	X	X
K	Ignitable/flammable organics	O	X	X	X	X	O	X	O	X	X	O	X	X
L	Explosives	O	X	X	X	X	X	X	X	X	X	X	O	X
M	Organic peroxides and hydroperoxides	X	X	X	X	X	X	X	X	X	X	X	X	O

(1) Boxes with an X inside indicate that the material in that row is incompatible with the material RGC for that column. An O indicates that the materials are compatible.

6989

CHECKLIST NO. 1
AIR BREATHING SYSTEM STARTUP DAILY CHECKLIST
(Printed Form-Not Keyboard Inputted)

:rform each function in order.

1. [ ] Drain surge tank on compressor.
Release drain plug, allow fluid to flow until it stops and tighten drain plug into surge tank)

2. [ ] Check Fluid levels and belts.
(Check the oil fluid levels and assure that they are full, check belts by physical inspection, check filters for gross contamination)

3. [ ] Start Compressor.
(Turn power on to compressor, assure that motor starts, stand back from unit until it comes to speed, 400 rpm)

4. [ ] Observe tank pressurization to 125 psi.
(Watch gauge on tank until it reaches 125 psi.)

5. [ ] Start purification unit.
(Turn power on to purification unit at the compressor control panel. Green "Power On" indicator light is lit.)

6. [ ] Verify the carbon monoxide monitoring unit is on. (At the compressor control panel Green "CO_2 Safe" light is on.)

7. [ ] Verify the carbon monoxide alarms are not lit.

8. [ ] Compressor start-up complete. Sign and date.

Name _____ Badge No. _____ Date _____

OSR>

CHECKLIST NO. 1
AIR BREATHING SYSTEM STARTUP DAILY CHECKLIST
Figure 1

0888

CHECKLIST NO. 2
SHIELDED FORKLIFT DAILY CHECKLIST
(Printed Form-Not Keyboard Inputted)

Perform each function in order:

Equipment/Materials Required:
1. Shielded Forklift
2. Key for Operations
3. Test Drum
4. Full Face Respirator with Filters

NOTE: Tests only to be conducted outside of buildings.

1. [ ] Check for Fuel Odor (Forklift uses propane fuel).
(Smell to determine if fuel odor is present. Check the fuel tank and connections. If fuel odor is present, do not start the vehicle and notify the supervisor.)

2. [ ] Check Fuel Level.
(Check the gauge on the fuel tank. The vehicle should only start operations if over one quarter of a tank of fuel is present. Report low fuel to the supervisor.)

3. [ ] Check the Tires.
(Check the tires for damage. The tires are solid rubber tires and do not require inflation. The only damage can be tread or cutting damage, if damage is present report damage to the supervisor.)

4. [ ] Check Oil Level.
(Check the oil level by removing the dip stick and checking oil level. The oil level should be between the two oil marks on the stick, if not notify the supervisor.)

5. [ ] Start the Vehicle.
Set parking brake, lower forks/manipulator to ground, check that vehicle is in neutral, and then insert the key and turn the vehicle on. If the vehicle does not start after four attempts, notify the supervisor.)

6. [ ] Check the Hour Meter.
(Check the hour meter, and record. _____hours on meter.)

CHECKLIST NO. 2
SHIELDED FORKLIFT DAILY CHECKLIST
Figure 2 (Sheet 1 of 3)

6989

7. [ ] Check the Horn and Lights.
(Check the horn and lights (located above the emergency brake) by engaging. If the horn or lights are not operating, report to the supervisor.)

8. [ ] Check Service Brake under Load.
(Release parking brake, depress service brake, and place the transmission in forward gear. The vehicle should not move. Move the gear selector to reverse and repeat this process. Move the gear selector again to forward and apply power to the accelerator pedal. The vehicle should not move. Remove foot from the accelerator pedal. Repeat the last step for reverse. Release the accelerator and set the parking brake.

9. [ ] Check Steering Capability.
(Turn the steering wheel completely to the left and right. Check that the steering is operable in both directions.)

10. [ ] Check Hoist Mechanism.
(Raise the hoist mechanism completely up and down through the entire extent of travel. There should be no jerking motion during hoist travel.)

11. [ ] Check Tilt Mechanism.
(Tilt the fork mechanism completely forward and backward through the entire extent of travel. There should be no jerking motion during travel.)

OSR> 12. [ ] Check the Drum Manipulator.
(The drum manipulator should be attached to the hydraulic system. Obtain the Manipulator Check Drum (MCD) and move the drum to the test area. Raise the drum to five feet above the ground. Set the parking brake and turn the vehicle off. The drum should not fall. Lower the attachment to the ground using the mast control. The drum should slowly lower to the ground. Turn the vehicle on. Lift the drum, rotate the drum ninety degrees and turn off the vehicle. The drum should not fall. Lower the attachment to the ground using the mast control. The drum should slowly lower to the ground. Turn the vehicle on. Return the drum to the storage location.)

CHECKLIST NO. 2
SHIELDED FORKLIFT DAILY CHECKLIST
Figure 2 (Sheet 2 of 3)

9808

13. [ ] Check Hydraulic System.
(Turn the vehicle off and set the parking brake. Step out and check hydraulic lines for leaks).

14. [ ] Check Instrumentation.
(Start the vehicle and check the oil pressure gauge, ammeter, water temperature, and hour meter to determine if indicators are operational.)

15. [ ] Check HEPA Filter as follows:

15.1 Check that the HEPA filter unit has been DOP penetration tested and approved within the last 12 months as indicated by test sticker.

15.2 Turn on HEPA filter fan and close the doors on the forklift.

15.3 Record the HEPA filter pressure _____ .

15.4 If the filter differential pressure is greater than 3.0 inches wg or is more than 0.5 inches wg less than the previous reading, do not operate the forklift and notify the supervisor.

15.5 Verify the cab pressure is positive.

16. [ ] Check for ELSA.
(Ensure an ELSA is located within the cab for use by the operator for escape purposes to a non-contaminated area. Check that respirator has a valid inspection sticker and ELSA unit pressure gauge indicates satisfactory pressure reading).

17. [ ] Check operation of the PAPR.
(The operator shall wear the PAPR at all times. The respirator includes a HEPA filtered portable air supply pump and two NICAD battery packs for the pump).

18. [ ] Check communication equipment.
(The operator shall wear a larynx mounted microphone and an earphone).

19. [ ] Forklift and Drum Manipulator check complete. Sign and Date.

Name	Badge No.	Date

CHECKLIST NO. 2
SHIELDED FORKLIFT DAILY CHECKLIST
Figure 2 (Sheet 3 of 3)

6989

CHECKLIST NO. 3
AIR PURIFICATION SYSTEM START-UP DAILY CHECKLIST
(Printed Form-Not Keyboard Inputted)

erform each function in order:

1. [ ] Check Inlet to Air Purification Unit.
(Compressed air line enters through DELTECH air filter. Check for air leaks.)

2. [ ] Check Filter Element.
(Check to assure that filter element is not a red color to the top of the filter, if red, notify the supervisor and shut down operation.)

3. [ ] Check Desiccant Dryer.
(Check color on desiccant dryer, the strips should be green. If the strips are changing to yellow beginning at the top of the vessel, stop the operation and notify the supervisor.)

4. [ ] Check Catalyst Vessel and Final Filter.
(Check dates for replacement, if the replacement date is within two weeks notify the supervisor. If the date is expired shut down the operation.)

5. [ ] Check OTOX 2022 Unit.
(Check to ensure that the "GREEN" light on the panel is "ON". Check calibration tag to ensure weekly check is completed, if not shut down the operation and notify the supervisor.)

6. [ ] Check completed. Sign and date.

Name _____ Badge No. _____ Date _____

CHECKLIST NO. 3
AIR PURIFICATION SYSTEM START-UP DAILY CHECKLIST
Figure 3

0809

CONVEYOR SYSTEM STARTUP DAILY CHECKLIST
(Form on Computer System)

Perform each function in order:

Materials Required:
1. Key for activation of unit
2. Crane activated and checked
3. Test weight drum
4. Drop Test Drum

[ ] Activate the Unit.
(To activate the unit, turn the key switch with the key to the "ON" position. The light for activation "Red" will come on and the unit is energized. If the light does not come on notify the supervisor.)

[ ] Perform a 0.0 lb check of the scale. If the scale does not register 0, notify the supervisor.

[ ] Use the crane to move the test weight drum onto the conveyor.
(Use the crane to lift the weighted drum onto the conveyor. Place the drum midpoint on the conveyor. Activate the scale with the conveyor on.)

[ ] Move the weighted drum to the scale.
(Using the control sequence, move the drum either forward or backward until the scale indicator stop light is on. Read the weight. The weight must be between 298.5 and 301.5 pounds, if not, notify the supervisor.)

[ ] Remove the weighed drum from the conveyor.
(Using the crane remove the weighted drum from the conveyor and place in drum storage location.)

[ ] Place the Drop Test Drum on the conveyor.
(Using the crane obtain the Drop Test Drum and place in the middle of the conveyor.)

[ ] Attempt to drop the drum off either end of the conveyor.
(Using the forward and reverse selectors move the drum to the furthest photo eye stops and ensure the drum will not pass these locations. The drum should not pass the location stops. If the drum does pass the stops and falls to the ground, notify the supervisor and stop operations. If the drums do not pass location stops, the unit has passed the operational startup test.)

[ ] This completes the start up test for the conveyor.

Name _____ Badge No. _____ Date _____

CONVEYOR SYSTEM STARTUP CHECKLIST
Figure 4

6989

RADIOLOGICAL DETECTION EQUIPMENT
GAMMA PROBE, ALPHA SCANNER, AND BACKGROUND PROBE DAILY CHECKLIST
(Form on Computer System)

erform each function in order.

Equipment required:
1. 55-gallon test drum
2. Conveyor and CCTV system operational

[ ] Activate all three radiological units.
(Turn on the SRM-200 units by depressing the "ON" switch for the gamma scanner, alpha scanner, and background gamma scanner. The units will stabilize in 30 seconds.)

[ ] Move the 55 gallon test drum onto the conveyor and align the gamma source.
(Using the crane, move the test drum onto the conveyor and align the gamma source so that the gamma scanner can read the first calibration point.)

[ ] Move the drum on the conveyor to the first radiological check point. (Using the conveyor control, move the drum to the first gamma check point. The conveyor should stop so that the drum is facing the unit.)

[ ] Activate the scanner and the scanner will extend to the source and stop.
(Activate the extension button on the unit and ensure the scanner extends to the drum.)

[ ] Read the data display.
(The display should read the same as the calibration curve with a ± 10% variation. If variation limits are exceed, notify the supervisor.)

[ ] Retract the scanner head.
(Using the activation button retract the scanner to retraction position. (Using the CCTV, ensure the scanner is in the retracted position.)

[ ] Move the drum to the end of the conveyor and using the drum lifter, lift the drum and move in front of the second survey point. (Move the drum to the end point of the conveyor and using the lift on the conveyor, move the drum to a position in front of the second survey point. The drum should automatically align the second source for calibration of the unit. If not aligned, use the crane to adjust the source to a usable calibration location.)

RADIOLOGICAL DETECTION EQUIPMENT
(ALPHA, GAMMA, AND BACKGROUND PROBE) DAILY CHECKLIST
Figure 5 (Sheet 1 of 2)

[ ] Activate the scanner and check for scanner extending to the source and stopping. (Activate the extension button on the unit and visually check that the scanner extends to the drum.)

[ ] Read the data display.
(The display should read the same as the calibration curve with a ± 10% variation. If variation is exceeded, notify the supervisor.)

[ ] Retract the scanner head.
(Using the activation button, retract the scanner to the retraction position. Ensure retraction position has been reached by viewing the CCTV.)

[ ] Move the drum to the end of the conveyor and using the drum lifter, lift the drum and move in front of the third survey point. (Move the drum to the end point of the conveyor and using the lift on the conveyor move the drum to a position in front of the third survey point. The drum should automatically align the third source for calibration of the unit. If not aligned, use the crane to adjust the source to a usable calibration location.)

[ ] Activate the scanner to extend to the source and stop.
(Activate the extension button on the unit and visually check that the scanner extends to the drum.)

[ ] Read the data display.
(The display should read the same as the calibration curve with a ± 10% variation. If variation is exceeded, notify the supervisor.)

[ ] Retract the scanner head.
(Using the activation button, retract the scanner to the retraction position. Check by viewing the CCTV that the retraction position has been reached.)

[ ] Return the test drum to the storage location.
(Using the crane, return the test drum to the storage location.)

[ ] This completes the daily check of the radiological detection equipment.

Name		Badge No.	Date

RADIOLOGICAL DETECTION EQUIPMENT
(ALPHA, GAMMA, AND BACKGROUND PROBE) DAILY CHECKLIST
Figure 5 (Sheet 2 of 2)

6989

CCTV DAILY OPERATION CHECK LIST
(Form on Computer System)

:rform each function in order:

Equipment/Materials Required:
1. Cleaning Cloths (2), Clean/soft
2. Cleaning Solution (Lens cleaner or equivalent) two bottles

[ ] Turn the Monitors and Cameras on.
(The monitor control is on the lower left section of the monitor and the camera power is on the tilt and pan controller section.)

[ ] Allow equipment to warm up for two minutes.
(After power up allow the equipment to stabilize.)

[ ] Activate the lights for the cameras.
(Activate the light switch for both of the cameras.)

[ ] Check the cameras by pointing them at each other.
(The camera check will determine if the lights are working, the iris is functioning on the camera, and the focus is working.)

[ ] Position the cameras on at least three objects and do a near and far focus.
(This will allow a check of the operability of the pan and tilt as well as the focus and iris functions.)

[ ] Clean the covers on the monitor and CCTV housing.
(Using the cleaning cloth and lens cleaner clean the screens on the CCTV and the monitor.)

Name _____ Badge No. _____ Date _____

OSR>

CCTV DAILY OPERATION CHECKLIST
Figure 6

0800

OPERATIONAL AND STARTUP CHECKLIST MOBILE SHIELD WALL
(Form on Computer System)

Materials Required:
1. Crane and CCTV on crane operational
2. Second Operator

[ ] Move the Crane to an observation location.
(Rotate the crane to a location where the CCTV system can see the entire mobile shield wall operation.)

[ ] Activate the Wall Open and Close.
(Using the control box located in the Control Console area open and close the shield wall. Repeat this check until the open and closed cycle have been checked.)

[ ] Check the Photoelectric Interrupt Mechanism.
(Have the second operator break the beam on the photoelectric light located on the leading edge of the door. The door must be in motion when the beam is broken. The door must stop both in the open and close operations. If the unit does not stop, notify the supervisor.)

[ ] This completes the check of the unit.
(This is the complete check for the mobile shield wall, there is no daily maintenance or other checks required.)

Name	Badge No.	Date

MOBILE SHIELD WALL OPERATIONAL AND STARTUP CHECKLIST
Figure 7

6989

CRANE DAILY OPERATION CHECKLIST
(Form on Computer System)

Perform each function in order:

Equipment/Materials Required:
1. Test Drum
2. Operational and Checked Conveyor and CCTV
3. Key for Crane Panel
4. Internal and External Lifting Attachments

[ ] Turn the Control Console "ON".
(Insert the key into the control consol, turn to the right, and depress the green activate button.)

[ ] Turn on the CCTV and allow to warm up for two minutes.
(After power up allow the equipment to stabilize.)

[ ] Check the CCTV for focus and lighting.
(Rotate the camera up and down, as well as left and right. Focus on five objects and turn the lights on and off two times.)

[ ] Raise the block "UP" (highest point) and "OUT" (end of travel).
(Tracking with the two CCTV units raise the block on the hoist to the highest position and then move the hoist to the fully extended position.)

[ ] Rotate the crane fully to the "left" and "right" until the unit stops at limits. (Using the right and left button in conjunction with the activate button, rotate the crane fully to the left and right and determine if the limit switches activate and stop the crane.)

[ ] Attach the external lifter and lift the test drum.
(Attach the external lifter and connect the power to the unit. The test drum may be on the conveyor from the conveyor check, or use the crane to lift the drum onto the conveyor. Using the external lifter raise the drum to the highest position and position the hoist to the fully extended position at a 90 degree angle to the conveyor. This should place the drum past the conveyor and directly over the floor.)

[ ] Turn off the power to the crane and the drum should remain connected. (Using the key control, turn off the crane. Using the other cameras, ensure the drum is still attached to the crane. This check will determine "fail-safe" operational condition.)

CRANE DAILY OPERATION CHECKLIST
Figure 8 (Sheet 1 of 2)

0808

[ ] Turn the power on and lower the drum to the floor.
(Using the key control turn on the power and the CCTV. Lower the drum straight down to the floor and release the drum from the external drum lifter when drum is on the floor.)

[ ] Attach the internal lifter and lift the test drum.
(Attach the internal lifter and connect power to the unit. The test drum should be on the floor from the previous check. Using the hoist and internal lifter raise the drum to the highest position and fully extended position at a 90 degree position to the conveyor. This should place the drum past the conveyor and directly over the floor.)

[ ] Turn off the power to the crane and the drum should remain connected. (Using the key control turn the crane off and viewing the other cameras ensure the drum is still attached to the crane. This will determine "fail-safe" operational condition.)

[ ] Turn the power on and lower the drum to the floor.
(Using the key control, turn on the power and the CCTV. Lower the drum straight down to the floor and release the drum from the internal drum lifter when drum is on the floor.)

[ ] Return the drum lifter to the storage location and remove from the crane.
(Return the drum lifter to the storage location.)

[ ] This completes the test on the crane and hoist system.

Name	Badge No.	Date

CRANE DAILY OPERATION CHECKLIST
Figure 8 (Sheet 2 of 2)

6989

CARD XX ITEM PRODUCTION/CERTIFICATION/IDENTIFICATION

P. O. NO.	SOURCE	CLASS	MATERIAL TYPE	LOT SEQUENCE NO.	DATE MO	DAY	YEAR	SHIFT	BADGE NO.	PACKAGE NO.

SEAL NUMBER	SEAL DATE MONTH DAY YEAR	PACKAGE PHYSICAL CERTIFICATION YES NO	PLANT	PROD. MBA
		EMPTY CONTAINER AT START		
		RUST HOLES OR DENTS		
		MATERIAL IS AS CODED	PLANT TO	MBA TO
WASTE DESCRIPTION AND COMMENTS		PROHIBITED MATERIALS		
		LIQUIDS IN CONTAINER		
PACKAGE TYPE		MINIMUM OF VOID SPACE		
PACKAGE SIZE		PACKAGE SECURED		
		DRAIN PLUG SECURED		

GROSS WEIGHT

TARE WEIGHT

NET WEIGHT

GENERATOR SIGNATURE SUPERVISOR SIGNATURE DATE

FS-F-1945-XX (REV 3/19/92)

CARD 65 ITEM PRODUCTION/CERTIFICATION/IDENTIFICATION

P. O. NO.	SOURCE	CLASS	MATERIAL TYPE	LOT SEQUENCE NO.	DATE MO	DAY	YEAR	SHIFT	BADGE NO.	PACKAGE NO.

SEAL NUMBER	SEAL DATE MONTH DAY YEAR	PACKAGE PHYSICAL CERTIFICATION YES NO	PLANT	PROD. MBA
		EMPTY CONTAINER AT START		
		RUST HOLES OR DENTS		
		MATERIAL IS AS CODED	PLANT TO	MBA TO
WASTE DESCRIPTION AND COMMENTS		PROHIBITED MATERIALS		
		LIQUIDS IN CONTAINER		
PACKAGE TYPE		MINIMUM OF VOID SPACE		
PACKAGE SIZE		PACKAGE SECURED		
		DRAIN PLUG SECURED		

GROSS WEIGHT

TARE WEIGHT

NET WEIGHT

GENERATOR SIGNATURE SUPERVISOR SIGNATURE DATE

FS-F-1945-65 (REV 3/19/92)

CARD 66 ITEM PRODUCTION/CERTIFICATION/IDENTIFICATION

P. O. NO.	SOURCE	CLASS	MATERIAL TYPE	LOT SEQUENCE NO.	DATE MO	DAY	YEAR	SHIFT	BADGE NO.	PACKAGE NO.

SEAL NUMBER	SEAL DATE MONTH DAY YEAR	PACKAGE PHYSICAL CERTIFICATION YES NO	PLANT	PROD. MBA
		EMPTY CONTAINER AT START		
		RUST HOLES OR DENTS		
		MATERIAL IS AS CODED	PLANT TO	MBA TO
WASTE DESCRIPTION AND COMMENTS		PROHIBITED MATERIALS		
		LIQUIDS IN CONTAINER		
PACKAGE TYPE		MINIMUM OF VOID SPACE		
PACKAGE SIZE		PACKAGE SECURED		
		DRAIN PLUG SECURED		

GROSS WEIGHT

TARE WEIGHT

NET WEIGHT

GENERATOR SIGNATURE SUPERVISOR SIGNATURE DATE

FS-F-1945-66 (REV 3/19/92)

ITEM PRODUCTION/CERTIFICATION/IDENTIFICATION
FS-F-1945-XX
Figure 9

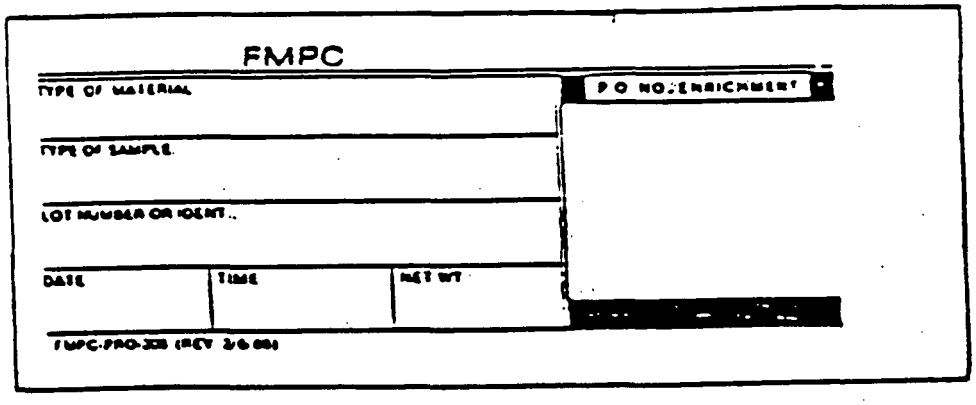

SAMPLE LABEL
FORM NO. FMPC-PRO-306
Figure 10

6989

FMPC
REPORT OF CHEMICAL ANALYSES

(NOTE: Write Firmly — Parts must be legible)

Lab. Nos. _____

Lot No. _____

Analyses Requested _____

	LAB. NO.	IDENTIFICATION	ANALYTICAL DATA					

NO.	DISTRIBUTION OF COPIES
1	Originator
2	Extra Copy
3	Quality Assurance
4	Analytical Record Copy

Approved By _____ Date of Report _____

REPORT OF CHEMICAL ANALYSIS
FORM NO. FMPC-T-200
Figure 11

0889

RECORD OF ISSUE/REVISIONS

DATE	REV. NO	DESCRIPTION AND AUTHORITY
12-05-89	0	Request for preparation of procedure for Thorium Overpacking per Request No. P89-385, initiated by K. A. Lawson/J. B. Patton.
02-13-90	1	Revised to incorporate CIO Nos. C90-001 (P90-028), C90-002 (P90-029), C90-006 (P90-030), C90-007 (P90-031), C90-008 (P90-032), C89-113 (P90-003), C89-114 (P90-004), C89-115 (P90-005), C89-116 (P90-006), C89-117 (P90-007), C89-118 (P90-008), C89-119 (P90-009), C89-120 (P90-010), C89-121 (P90-011), C89-122 (P90-012), C89-123 (P90-013), C89-124 (P90-014), and C89-125 (P90-015).
08-10-90	2	Revised to incorporate CIO Nos. C90-009 (P90-148), C90-010 (P90-149), C90-011 (P90-150), and C90-013 (P90-151).
02-19-92	3	Revised to incorporate CIOs C91-057 (P91-692) and C91-054 (P91-693).
06-21-93	0	Reissued to update technical content per Request P92-431, initiated by C. Glassmeyer, reformat to conform with Procedure Program requirements, and incorporate C93-034 per Request P93-573.

Fernald Environmental Management Project Fernald Environmental Restoration Management Corp. REMEDIATION SUPPORT OPERATIONS DOCUMENT PROGRAM		Page 1 of 17 Revision No. 0 Revision Date: N/A
REMEDIATION SUPPORT OPERATIONS PROCEDURE	Trash Baler Operation	SOP 02-C-923 Area: Plant 2/3
(Signature on File) Authorization: D. Garrett, RSO Facility Programs Manager	Supersedes: 02-C-923 Dated: 10-18-93	Issue Date: 10-27-94

NON-CONTROLLED COPY

1.0 PURPOSE

The purpose of this document is to provide the procedure for baling contaminated trash for off-site disposal.

2.0 APPLICABILITY

This procedure applies to the SELCON Trash Baler in the Incinerator Bldg. (Bldg. 39A) at the Fernald Environmental Management Project (FEMP).

3.0 RESPONSIBILITIES

3.1 Supervisors are responsible for the following:

3.1.1 Ensuring that personnel are qualified per the established training requirements identified by the Department Manager.

3.1.2 Maintaining training records of personnel operating the trash baler.

3.1.3 Contacting Environmental Safety and Health (ES&H) to determine the appropriate personal protective equipment (PPE) for handling contaminated trash.

3.1.4 Providing operators with the required PPE.

3.1.5 Shutting off and locking out power to the baler per SSOP-0719 prior to repairs, making adjustments, or cleaning the baler.

3.1.6 Establishing and revising (when required) a regular schedule for the delivery of contaminated trash to the trash baler.

3.1.7 Providing Waste Programs Management (WPM) with the information on prohibited items identified in Nevada Test Site Waste Stream ONLO-000000007 (contaminated trash).

3.1.8 Contacting Quality Assurance when ready to load bales into International Shipping Organization (ISO) container for shipment.

3.1.9 Ensuring the baler is operated in a manner that provides efficient operation dependent on delivery rate of trash.

3.1.10 Ensuring a two-way radio is present and operational when Baler operators are inside the Incinerator Building.

3.0 RESPONSIBILITIES (cont.)

3.2 **Baler Operators** are responsible for the following:

3.2.1 Complying with this Standard Operating Procedure (SOP).

3.2.2 Wearing PPE as directed by the supervisor.

3.3 **Waste Programs Management (WPM)** is responsible for the following:

3.3.1 Periodically updating the prohibited items list, posted on the trash baler and contaminated trash dumpsters, with action to take if prohibited items are found.

3.3.2 Notifying generators, facility owners, and trash handlers, on a routine basis, the disposal alternative for prohibited items.

3.4 **Quality Assurance (QA)** is responsible for the following:

3.4.1 Evaluating the Weekly Trash Baler Operation Log and documentation from the Package Certifiers (pre-baled trash).

3.4.2 Notifying the Baler Supervisor of prohibited items.

3.4.3 Issuing Deviation Reports and/or Corrective Action Reports when appropriate.

3.5 **Package Certifiers (QA)** are responsible for the following:

3.5.1 Inspecting a portion of the trash prior to baling.

3.5.2 Documenting prohibited items segregated.

3.5.3 Notifying violators of prohibited items.

3.5.4 Documenting prohibited item notifications.

3.5.5 Completing Part III of the Weekly Trash Baler Operation Log.

3.6 **Real Time Radioscopic (RTR) Operators** are responsible for the following:

3.6.1 Inspecting 100% of the baled trash, unless otherwise directed by WPM.

3.6.2 Documenting, on the examination log, prohibited items that are found.

3.6.3 Forwarding a copy of the Weekly Trash Baler Operation Log each week to WPM.

4.0 DEFINITIONS

4.1 Contaminated Material - A substance containing radioactive constituents that are above the limit for unrestricted release (1,000 dpm/cm^2).

4.2 Platen - Pressure plate of the baler.

6989

5.0 APPLICABLE DOCUMENTS

5.1 Drivers

5.1.1 PO-D-026, "Site Services Document Program"

5.1.2 RM-0012, "Quality Assurance Program Description"

5.2 References

5.2.1 SOP 20-C-902, "Inspecting and Operating Liquid Propane Gas (LPG) Powered Handstackers and Tuggers"

5.2.2 SSOP-0719, "FERMCO Lockout and Tagout (Hazardous Energy and Material Control) Procedure"

5.3 Other Sources

5.3.1 NVO-325, "Nevada Test Site Defense Waste Acceptance Criteria, Certification, and Transfer Requirements"

6.0 INDUSTRIAL HEALTH AND SAFETY REQUIREMENTS

6.1 Safety glasses shall be worn unless other eye protection is specified by the supervisor, ES&H, or posted signs.

6.2 Leather-palm gloves shall be worn when loading or conveying trash.

6.3 When making adjustments or cleaning the baler, electrical power shall be shut off and locked out per SSOP-0719.

6.4 Respiratory protection and PPE issued by the supervisor shall be worn when specified by ES&H, the supervisor, or posted signs.

6.5 Personnel shall move away from the incinerator bin and conveyor while dumpsters are being emptied.

6.6 Any circumstance which could have resulted in an intake of radioactive materials by inhalation, ingestion, or absorption shall immediately be reported to a Supervisor. The Supervisor shall immediately report the circumstance of possible radioactive materials intake to ES&H Radiological Control Department for evaluation. When the suspect isotope is uranium, the involved personnel shall report to the Urine Sampling Station at the end of their shift to complete an Incident Investigation Report (IIR) (Form No. FS-F-1458), and submit an incident urine sample. The involved personnel shall also report to the Urine Sampling Station at the start of their next shift to submit a follow up urine sample. When the suspect isotope is other than uranium, the involved personnel shall report to the Dosimetry Section of the Radiological Control Department for further determination of actions. Employees are responsible for complying with additional requirements as specified by the Radiological Control Section.

0800

6.0 INDUSTRIAL HEALTH AND SAFETY REQUIREMENTS (cont.)

6.7 Any situation which could have resulted in the inhalation, ingestion, or absorption of a hazardous material shall immediately be reported to a Supervisor or to the Assistant Emergency Duty Officer (AEDO), who will immediately report the circumstances to Medical and Industrial Hygiene. The involved personnel shall be directed by the Supervisor or AEDO as to when and where to report for medical evaluation, completion of an Incident Investigation Report (IIR) (Form No. FS-F-1458), and submitting bioassay samples (e.g. blood, urine). Employees are responsible for complying with any additional requirements as specified by ES&H.

7.0 GENERAL

7.1 Warnings, Cautions, and Notes precede the Item or Step to which they apply.

7.2 If the baler, supporting facility, or associated vehicles become inoperative, the supervisor shall be notified and the Contingency Plan (See Figure 1) initiated.

8.0 PROCEDURE

8.1 Trash Receiving and Inspection

WARNING

The operator manning the CONVEYOR RUN switch must be the same person inspecting trash for prohibited items to prevent injury by conveyor actuation.

BALER OPERATOR

8.1.1 After a dumpster has been emptied into the bin, check inside the dumpster to ensure no trash remains inside the dumpster.

8.1.1.1 If trash remains inside the dumpster, use a rake to pull the material from the dumpster into the bin.

8.1.2 Actuate the conveyor to move trash bags from the bin by pushing and holding the CONVEYOR RUN switch until trash is at the top of the conveyor. Release the switch to stop the conveyor.

8.1.3 Visually inspect the trash for prohibited items or categories of waste (See Figure 2) and complete Part I of the Weekly Trash Baler Operation Log (See Figure 3).

8.1.4 If prohibited items are found, proceed as follows:

8.1.4.1 Gain access to the trash bags by cutting a hole in the bag.

8.1.4.2 Remove the prohibited items from the trash bag.

8.1.4.3 Segregate each item and place in the interim storage receptacles (55 gallon drums) located adjacent to the baler.

8.0 **PROCEDURE** (cont.)

8.1.4.4 Document from which area the prohibited item originated in Part II of the Weekly Trash Baler Operation Log (see Figure 3).

8.1.4.5 Notify the supervisor of prohibited items found.

SUPERVISOR

NOTE: WPM shall be notified if more than 10 percent of dumpster contents consists of prohibited items.

8.1.4.6 Notify the Dumpster Owner of prohibited items found.

8.1.4.7 Forward a copy of the Weekly Trash Baler Operation Log to Waste Verification Quality Assurance after Parts I and II are completed.

BALER OPERATOR

NOTE: A red "X" on a bag identifies bags dropped at a dumpster with no identification showing point of origin.

8.1.5 Check for bags identified with a red X and unmarked bags. If found, proceed as follows:

8.1.5.1 Identify unmarked bags with a red X.

8.1.5.2 Set X-marked bags aside for inspection.

8.1.5.3 Notify the supervisor of X-marked bags.

8.1.5.4 When permission is granted by the supervisor, open the bag(s) and inspect the contents.

8.1.5.5 If prohibited items are found, perform Steps 8.1.4.1 thru 8.1.4.5.

SUPERVISOR

8.1.5.6 If prohibited items were contained in the trash, notify the Dumpster Owner.

BALER OPERATOR

8.1.5.7 If prohibited items were found, enter the following on the Weekly Trash Baler Operation Log (Parts I and II):
(A) the point of generation
(B) bags inspected
(C) items removed at the baler

SUPERVISOR

8.1.5.8 Forward the Weekly Trash Baler Operation Log to Waste Verification Quality Assurance for completion of Part III.

8.0 PROCEDURE (cont.)

BALER OPERATOR

8.1.6 Complete an "Item Production/Certification/Identification" card, (See Figure 4). Sign the 1945-XX Card as "Generator".

8.1.7 Ensure the bale removal chain at the rear of the baler is unhooked from the platen (See Figure 5).

NOTE: The Trash Baler should not operate in the automatic mode unless the door is positioned against limit switches and latched.

8.1.8 Ensure the bale removal door is closed and securely latched.

8.1.9 Check the scaffold for loose items.

8.1.9.1 Remove loose items from the scaffold.

8.1.10 Position the scaffold platform against the bale removal door.

8.1.11 Lock the scaffold wheels in place.

8.1.12 Latch scaffolding chain locks onto the baler frame.

8.1.13 Place moveable walkway between the scaffolding and the platform.

8.1.14 Position the south swinging gate between the angle iron and scaffoldin

8.1.15 Chain and lock the north swinging gate to the scaffolding.

8.2 Baler Operation (See Figure 5)

BALER OPERATOR

8.2.1 Raise the safety gate.

8.2.2 Cover the bale chamber floor with a large sheet of trash cardboard.

8.2.3 Place trash bags in the bale chamber.

NOTE: The baler will not operate in the automatic mode unless the safety gate is closed and latched.

8.2.4 Pull down the safety gate until the gate is latched.

NOTE: The baler will automatically compact the contents and return to the UP position.

8.2.5 At the Remote Baler Control, press the DOWN pushbutton.

8.2.6 Repeat Steps 8.2.1 and 8.2.3 thru 8.2.5 until the bale is nearly complete or 1/2 complete if approved by the supervisor.

REMEDIATION SUPPORT OPERATIONS 6989
TEMPORARY CHANGE NOTICE (TCN) 1

ONLY ONE TCN CHANGE PERMITTED PER DOCUMENT PAGE

1. NOTE: TCN not valid without Supervisor signature, Manager initials and Operator signature (when required).

SUPERVISOR: Tony Paletta EXT: 6798 SIGNATURE: (Signature on File)

OPERATOR: Ray Cranert EXT: 6798 SIGNATURE: (Signature on File)

DOCUMENT OWNER: D. Garrett SUPV. ORG.: RSO/FP CHARGE NUMBER: 7BBK2

2. EFFECTIVE DATE OF CHANGE: 12-19-94 NON-CONTROLLED COPY

3. EXPIRATION DATE OF CHANGE: 06-19-95 *NOTE: Maximum effective period six months.*

4. AFFECTED DOCUMENT NUMBER: SOP 02-C-923

5. AFFECTED PAGE NUMBER 6

6. DOCUMENT ISSUE DATE: 10-27-94 REVISION NUMBER: 0

7. CHANGE (Use additional sheets of paper if necessary):
Enter each item number and associated change separately.

1) Step 8.1.6 is DELETED.

8.1.6 DELETED

8. PROCEDURE ADMINISTRATION TCN ACTION REQUIRED (Check as Appropriate)

8a. ☐ EFFECTIVE PERIOD > 30 DAYS. DISTRIBUTE TCN AND INCORPORATE INTO AFFECTED DOCUMENT BEFORE TCN EXPIRES.

8b. ☐ EFFECTIVE PERIOD > 30 DAYS. DISTRIBUTE TCN BUT DO NOT INCORPORATE. ALLOW TCN TO EXPIRE.

8c. ☐ EFFECTIVE PERIOD < 30 DAYS. DO NOT DISTRIBUTE. ALLOW TCN TO EXPIRE.

8.0 PROCEDURE (cont.)

8.2.7 Before compaction is complete, add a large cardboard sheet to the top of bale.

NOTE: When a bale is completed, the indicator at the Remote Baler Control will light and the baler automatically shut off in the DOWN position.

8.2.8 Repeat Steps 8.2.1 and 8.2.3 thru 8.2.5 and complete the bale.

8.2.9 Record the bale number on the Weekly Trash Baler Operation Log.

8.3 Bale Removal

BALER OPERATOR

8.3.1 Check the scaffold to ensure that loose items have been removed from the platform.

8.3.1.1 Remove any remaining loose items.

8.3.2 Unlock scaffold platform wheels.

8.3.3 Move the platform away from the bale removal door.

8.3.4 Using the gradual tension release latch, open the Bale Removal Door.

8.3.5 Insert wires (a maximum of six) through the slots in the floor of the baling chamber.

8.3.6 Wrap the wires around bale and then back through the slots in the ram of the baler.

8.3.7 Insert the end of each wire through the end loop.

8.3.8 Wrap each end of the wire at least four times above the end loop.

8.3.9 At the rear of the baler, hook the bale removal chains onto the platen.

8.3.10 Inspect the handstacker or tugger to be used per SOP 20-C-902.

8.3.11 Operate the handstacker or forklift to be used without a load to ensure safe conditions.

8.3.12 Using the handstacker or forklift, position a wood skid at bale removal door.

8.3.13 Ensure that the baler safety gate is in the closed position.

NOTE: Only one bale shall be placed on a skid.

8.3.14 At the Remote Baler Control, press and hold the UP pushbutton until the bale rolls out onto the skid.

0880

8.0 **PROCEDURE** (cont.)

8.3.15 Using the handstacker or forklift, move the skid away from the baler.

NOTE: Use bale number "W050-240-P-027-XXXX." The last four numbers shall be in sequence, starting with 0001.

8.3.16 Mark the bale with the date and bale number.

8.3.17 Record the bale number on the Trash Baler Operation Log.

8.3.18 On the baler, close and latch the bale removal door.

8.3.19 At Remote Baler Control, press and hold the DOWN pushbutton.

8.3.20 When the baler platen reaches the lowest position, ensure that bale removal chains automatically unhook from rear of platen.

8.3.21 If chains fail to unhook proceed as follows:

8.3.21.1 Release the DOWN pushbutton.

8.3.21.2 Press the EMERGENCY STOP pushbutton at the Remote Baler Control.

8.3.21.3 Manually unhook the chains.

NOTE: The baler cycle shall complete with the baler ram in the UP position.

8.3.21.4 Push the EMERGENCY STOP button head.

NOTE: The baler shall return to the UP position.

8.3.22 Release the DOWN pushbutton.

8.3.23 Complete the "Item Production/Certification Identification" card (See Figure 4).

8.3.24 Give the completed 1945-XX card and the filled-out Weekly Trash Baler Operation Log to the supervisor.

WARNING

Do not store Bales more than two high, to prevent potential stack collapse.

8.3.25 Move completed bale to the designated storage area (north area of building).

8.3.26 When baling is complete, secure the area and switch baler power off.

8.0 PROCEDURE (cont.)

SUPERVISOR

8.3.27 Notify QA that baled trash is ready for RTR inspection.

8.4 Trouble Shooting

BALER OPERATOR

NOTE: Bale disassembly and inspection is performed on bales of trash failing RTR inspection for prohibited items.

8.4.1 Inspect baler.

NOTE: Baler must be empty and prepared per Steps 8.2.1 and 8.2.2 procedures prior to disassembling bale for inspection.

8.4.1.1 If a bale is in baler, preform Steps 8.3.1 through 8.3.26 procedures.

NOTE: Only trash from the bale being disassembled is allowed to be deposited into the baler. No new trash is allowed.

8.4.2 Perform Steps 8.2.1 and 8.2.2 procedures.

8.4.3 Move RTR rejected bale to front of the baler using the power handstacker.

8.4.4 Cut the wires holding the bale together to gain access to the bale and inspect for prohibited items.

8.4.5 If the RTR operator identified the approximate area of the prohibited item, look in that area by disassembling the bale.

8.4.6 As the bale is disassembled, put the trash into the baler and perform Steps 8.2.1 through 8.2.9 procedures.

8.4.7 If a prohibited item is found, perform Steps 8.1.4.2 through 8.1.4.7.

NOTE: The disassembled and inspected bale must maintain the original bale number and "Item Production/Certification/Identification" card.

8.4.8 When bale disassembly and inspection is completed, reassemble bale (less prohibited items) per Step 8.2 procedures, then remove the bale per Step 8.3 procedures.

8.5 Trouble Shooting

8.5.1 If the baler will not start or stops during operation, proceed per Corrective Action items listed in Table 1.

8.5.2 If the problem cannot be corrected or if other problems are encountered, notify the supervisor.

0808

8.0 PROCEDURE (cont.)

SUPERVISOR

8.5.3 Inform Maintenance that repair is required.

8.6 Transfer and loading of bales into Sea/Land Containers

SUPERVISOR

NOTE: Baler Operator shall be present to assist QA if problems occur.

8.6.1 Notify Quality Assurance that baled trash is ready for loading into Sea/Land containers.

8.6.2 Notify the Radiological Control Technician responsible for the area that baled trash is ready for loading into Sea/Land containers.

8.6.3 Contact motor vehicle operator to move bales when monitoring personnel are present.

MOTOR VEHICLE OPERATOR

8.6.4 At the direction of the Supervisor, move bales of trash.

9.0 APPLICABLE FORMS

9.1 "Trash Baler Operation Log"

9.2 FS-F-1945-XX, "Item Production/Certification/Identification"

TABLE 1
BALER TROUBLE SHOOTING

PROBLEM	CAUSE	CORRECTIVE ACTION
1. Baler will not start.	A. Bale removal door/latch open. B. Safety Gate Open. C. EMERGENCY STOP Switch activated.	A. Close removal door and latch. B. Close Safety Gate. C. Turn EMERGENCY STOP push button head to release the locking device.
2. Baler Shuts Down	A. Safety gate raised faster than ram. B. Releasing the UP push button during the ejection cycle.	A. Allow ram to move up before activating safety gate. B. Press and hold the UP button.

8808

TRASH BALER CONTINGENCY OPERATING PLAN

ASSUMPTIONS: Baler operates in a manner that provides an efficient operation dependent on delivery rate of trash.

This contingency plan shall be used until the new compactor is on-line and baling operations are transitioned.

Generation rate of compactable unbaled trash on any given two week period can be contained in 3 ISO containers.

STRATEGY STATEMENT: This plan shall be effective in the event the Trash Baler, supporting facility, or vehicles are inoperable for a period of 3 working days. Should this period of inoperability exceed 10 working days, additional contingencies shall be made available.

COLLECTION: Dumpster Owners shall notify Waste Operations of excess trash (trash that can not be put into the dumpster because the dumpster is full). This trash will be collected daily by RSO Waste Operations and taken to the area containing the interim storage ISO containers.

HANDLING: Waste Operations shall load and unload excess compactable trash.

INSPECTION: QC shall inspect excess trash prior to loading into the interim storage ISO containers. If scheduling conflicts arise and QC can not inspect prior to loading, the ISO may be inspected during unloading for compaction at the baler.

STORAGE: Storage of the excess compactable trash shall be in three containers numbered I, II, and III and located north of Storm Sewer Lift Station. These ISO containers shall be used when this plan is activated and shall be unloaded and baled at the earliest possible date.

TRASH BALER CONTINGENCY OPERATING PLAN
Figure 1

NTS Waste Stream -- ONLO-00000007

"Contaminated Trash"

Allowed Items	Restrictions
Certain Batteries	No Lead-Acid (vehicle) or Ni-Cad (rechargeable)
Empty Cans	No prohibited Item Residue
Metal	Less than 2 ft. in length. Free from grease, oil, residues, lead-based paint
Paper/Cardboard	
Personal Protective Equipment (Anti-C's, Boots, Gloves, Tyvek)	Unless specifically restricted by Work Plan
Plastic	
Rope,Twine,String	
Styrofoam,Rubber	
Wood	Less than 2 ft. in length. Free from creosote, residue, stains, lead-based paint

Dumpster Usage Instructions:

1. All trash MUST be marked with the building or area of origin.
2. All trash MUST be placed inside the dumpster (except green-bagged Office Trash).

Prohibited Items	Examples	Where to Go	Who to Contact
Asbestos Containing Material	Transite, Pipe Insulation Floor Tile	---	Leigh Fisher, x8638
Batteries	Auto, Ni-Cad Rechargeable	Plant 6	Rick Enneking, x6736
Compressed Gases and Aerosol Cans (unpunctured)	Spray Paint, Deodorant Cans, Spray Disinfectant Cleaner, WD-40, Propane	Plant 1	Sam Laupola, x6052
Glass	Bottles, Jars, Light bulbs	Plant 1	Sam Laupola, x6052
Lead-bearing Material	Lead metal, Pipe dope, Lead flashing, Oil filters	Satellite Accum. Areas	Rick Enneking, x6736
Liquids	Water, Coffee, Ice, Pop	Sink	---
Mercury-bearing Material	Switches, Vacuum Pumps	Satellite Accum. Areas	Rick Enneking, x6736
Particulates (unbagged)	Ashes, Dust, Pad Sweepings	---	Chuck Menche, x6428
Solvents and Soaked Rags	Kerosene, Toluene, Acetone	Satellite Accum. Areas	Rick Enneking, x6736
UNCONTAMINATED TRASH	Office Trash, Paper, Non-radioactive trash	---	Chuck Menche, x6428
Wood	Pallets, 2X4's, Lumber	Plant 1	Lori Hurst, x8448

Any Questions...Call
Waste Generation Control - X8444

PROHIBITED WASTE
Figure 2

FEMP
WEEKLY TRASH BALER OPERATION LOG

PART I							PART II	PART III	
DATE	SHIFT	OPERATOR INITIALS	DUMPSTER NO./REWORK	NUMBER OF BAGS/LABELLED	BALE NO.	PROHIBITED ITEMS FOUND AND DESCRIPTION	WHERE WAS PROHIBITED ITEM DISPOSED?	NAME OF DUMPSTER OWNER OR GENERATOR CONTACTED	QUALITY CONTROL SIGNATURE/DATE

At the end of each week:

1. Operators complete PARTS I and/or II, forward to supervisor. Supervisor forward a copy to QA.
2. QA complete PARTS II and/or III and forward a copy to Operators at MS 62 and Waste Programs Management.
3. QA keep a copy as part of Deviation Reporting System backup file.
4. Supervisor keep original and copy from QA on file at work station.

Any bag that has no markings (Building #, Plant, Area, Project, or a red "X") shall be marked with a red "X" and set aside for internal inspection.

WEEKLY TRASH BALER OPERATION LOG
Figure 3

6989

CARD 65- **ITEM PRODUCTION/CERTIFICATION/IDENTIFICATION**

INV. NO.:

P. O. NO.	SOURCE	CLASS	MATERIAL TYPE	LOT SEQUENCE NO.	DATE MO	DATE DAY	DATE YEAR	SHIFT	BADGE NO.	CONT. NO.	SERIAL NO.

SEAL NUMBER	SEAL DATE MONTH	SEAL DATE DAY	SEAL DATE YEAR

WASTE DESCRIPTION AND COMMENTS

PACKAGE TYPE	
PACKAGE SIZE	
PROJECT	

PACKAGE PHYSICAL CERTIFICATION	YES	NO
EMPTY CONTAINER AT START		
RUST HOLES OR DENTS		
MATERIAL IS AS CODED		
PROHIBITED MATERIALS		
LIQUIDS IN CONTAINER		
MINIMUM OF VOID SPACE		
PACKAGE SECURED		
DRAIN PLUG SECURED		
OVERPACK		
REPACK		

PLANT	PROD. MBA	MEF NO.
DCAR	SURV. NO.	GROSS WEIGHT
		TARE WEIGHT
		NET WEIGHT

GENERATOR SIGNATURE

SUPERVISOR SIGNATURE DATE

FS-F-1945- (REV. 11/20/92)

MENT PRINTING OFFICE: 1993

ITEM PRODUCTION/CERTIFICATION/IDENTIFICATION
Figure 4

0808

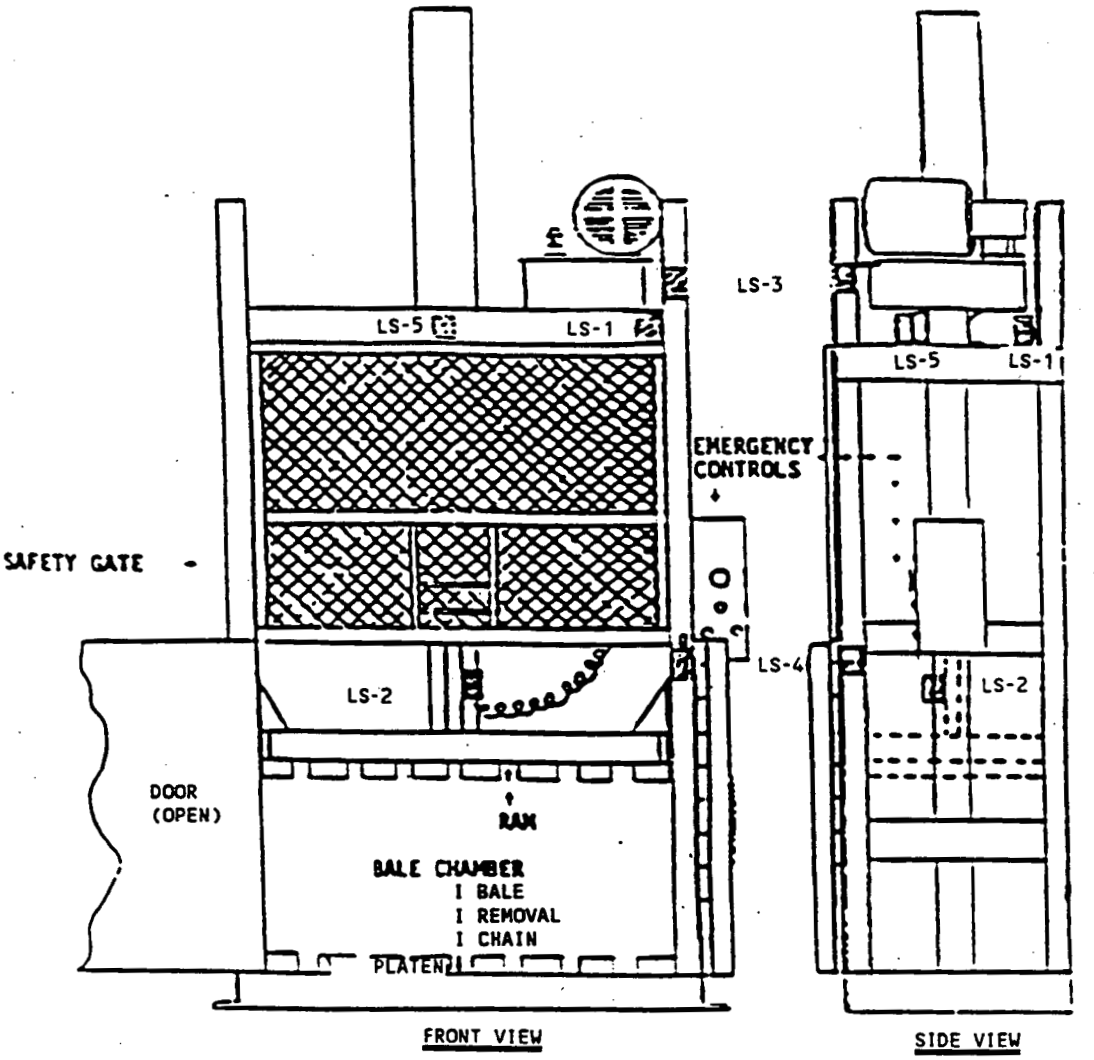

LIMIT SWITCH LOCATIONS

LS-1 - UP STOP
LS-2 - GATE-PLATEN INTERLOCK
LS-3 - GATE CLOSE
LS-4 - BALE CHAMBER DOOR
LS-5 - BALE SIZE

TRASH BALER CONFIGURATION
Figure 5

RECORD OF ISSUE/REVISIONS

DATE	REV. NO.	DESCRIPTION AND AUTHORITY
10-21-87	N/A	Preparation of procedure for Baling Trash per Request No. P86-168, initiated by B. Perkins.
06-19-89	N/A	Revised to incorporate C89-002 per Request No. P89-098.
09-01-89	1	Revised to incorporate CIO Nos. C89-065 (P89-352), C89-066 (P89-372), and C89-005 (P89-100). Revision program changed from "Page Revision Date" to "Revision No.".
10-14-91	0	Reissued to update technical content per Request P91-270, initiated by M. Jackson and to incorporate CIOs C90-058, (P91-095) and C90-062 (P91-112).
07-01-92	1	Revised to incorporate CIO C92-014 (P92-137) and update to current procedure program requirements, other than CIO incorporation, no changes were made to technical content.
10-18-93	0	Reissued to update procedure to current requirements, per Request No. P93-1004, initiated by R.W. Bischoff. Also CIO C93-716 (P93-1005) incorporated.
05-10-94	1	Revised to incorporate CIOs C93-754 (P94-0252), C93-755 (P94-0253), and C94-001 (P94-0254).
10-27-94	0	Reissue required to incorporate changes resulting from Safety Review Committee Audit per request P94-0417, initiated by M. Frost.

REMEDIATION SUPPORT OPERATIONS PROCEDURE	Crushing Scrap Drums Using The TEEMARK® Drum Packer/Crusher	SOP 20-C-109 Area: As Applicable
(Signature on File) Authorization: G. Hazlewood, Waste Programs Project Mgmt. Manager	Supersedes: None	Issue Date: 01-11-95

1.0 **PURPOSE**

The purpose of this document is to provide the procedure for crushing empty scrap drums using the TEEMARK® DRUM CRUSHER/PACKER.

2.0 **APPLICABILITY**

This procedure applies to the TEEMARK® DRUM CRUSHER/PACKER used for crushing scrap drums/cans at the Fernald Environmental Management Project (FEMP).

3.0 **RESPONSIBILITIES**

3.1 **Supervisors** are responsible for the following:

3.1.1 Ensuring personnel are qualified per the established training requirements identified by the Division Manager.

3.1.2 Contacting Industrial Hygiene or Radiological Control to determine the appropriate respiratory protection and personal protective equipment (PPE) for the process being performed.

3.1.3 Issuing the required respiratory protection and PPE to operators.

3.1.4 Reviewing applicable Material Safety Data Sheets (MSDSs) and Radiological Work Plans (RWPs) with operators.

3.2 **Operators** are responsible for the following:

3.2.1 Complying with this Standard Operating Procedure (SOP).

3.2.2 Wearing respiratory protection and PPE as provided by the supervisor.

3.3 **Environmental Safety and Health (ES&H)** is responsible for completing the FERMCO Work Permit package after initiation by RSO supervision.

4.0 **DEFINITIONS**

None

5.0 **APPLICABLE DOCUMENTS**

5.1 Drivers

5.1.1 RM-0012, "Quality Assurance Program Description"

5.1.2 D10-00-020, "Remediation Support Operations Division Document System"

5.0 **APPLICABLE DOCUMENTS** (cont.)

5.2 References

5.2.1 None

6.0 **INDUSTRIAL HEALTH AND SAFETY REQUIREMENT**

6.1 A defined safety system is not involved.

6.2 Safety glasses with side shields shall be worn unless other eye protection is specified by ES&H.

6.3 Hearing protection shall be worn by the operator of the drum crusher and personnel in the drum reconditioning facility when the drum crusher is in operation.

6.4 Respiratory protection and PPE provided by the supervisor shall be worn when required by ES&H.

6.5 Leather-palm gloves shall be worn when handling drums/cans, operating equipment, and when handling rough, sharp-edged, or contaminated material.

6.6 HEPA type filter vacuum cleaners or a vacuum system approved by ES&H shall be used for cleaning.

6.7 Operators shall have reviewed and be familiar with MSDSs for hazardous chemicals/materials that may be used or encountered.

6.8 Any circumstance which could have resulted in an intake of radioactive materials by inhalation, ingestion, or absorption shall immediately be reported to a supervisor. The supervisor shall immediately report the circumstance of possible radioactive materials intake to ES&H Radiological Control Department for evaluation. When the suspect isotope is uranium, the involved personnel shall report to the Urine Sampling Station at the end of their shift to complete an Incident Investigation Report (IRR) (Form No. FS-F-1458), and submit an incident urine sample. The involved personnel shall also report to the Urine Sampling Station at the start of their next shift to submit a follow up urine sample. When the suspect isotope is other than uranium, the involved personnel shall report to the Dosimetry Section of the Radiological Control Department for further determination of actions. Employees are responsible for complying with additional requirements as specified by the Radiological Control Section.

6.9 Any situation which could have resulted in the inhalation, ingestion, or absorption of a hazardous material shall immediately be reported to a Supervisor or to the Assistant Emergency Duty Officer (AEDO), who will immediately report the circumstances to Medical and Industrial Hygiene. The involved personnel shall be directed by the Supervisor or AEDO as to when and where to report for medical evaluation, completion of an Incident Investigation Report (IRR) (Form No. FS-F-1458), and submitting bioassay samples (e.g. blood, urine). Employees are responsible for complying with any additional requirements as specified by ES&H.

6989

7.0 **GENERAL**

7.1 Warnings, Cautions, and Notes precede the Step or Subsection to which they apply.

8.0 **PROCEDURE**

8.1 Preliminary Setup

8.1.1 Securely attach HEPA ventilator hose to upper hose coupling.

8.1.2 Check intake filter to verify it is securely in place, is not clogged and does not require replacement.

8.1.3 Start the ventilation unit.

8.2 Operation of the Drum Crusher

WARNING 1:

Drums that have contained volitiles should only be crushed in explosion proof models to prevent serious injury or death.

WARNING 2:

Drums that contain materials that ignite or explode under pressure should never be crushed to prevent serious injury or death.

WARNING 3:

Drums containing Thorium or Radium residue must not be crushed to prevent possible contamination.

CAUTION

To avoid spills, drums, should have all liquids drained from them before crushing.

NOTE 1: It is not necessary to remove drum bungs because the equipment is equipped with a piercing device.

NOTE 2: Open top drums must be crushed with the open end down.

8.2.1 Open drum crusher and place the drum in the center of the crusher chamber.

8.2.1.1 If the drum is not empty or contains residues, contact the supervisor and request disposition instructions.

8.2.2 Close and latch the door.

NOTE: The crusher will not operate while the door is open.

8.2.3 Pull out the emergency STOP pushbutton. (See Figure 1)

0388

8.0 **PROCEDURE** (cont.)

8.2.4 Start the hydraulic pump.

8.2.5 Start the crushing cycle by pulling both valve handles forward until locked in position (Handles are above the door on the door latch side).

NOTE: During the crushing cycle the left valve handle snaps back when maximum pressure is attained and the ram begins to retract. The right valve handle snaps back when the ram is fully retracted.

8.2.6 Ensure the ram crushes the drum and returns to the up position.

NOTE: It is not necessary to turn off the motor between cycles.

8.2.7 When both handles have returned, open the door and remove the crushed drum.

8.2.8 Visually inspect the drum crusher hopper for residue.

8.2.9 If residue is found, clean the hopper using a HEPA type filter vacuum cleaner or a vacuum system approved by ES&H.

8.2.10 Remove the crushed drum from the crusher compartment using a hoe/rake.

8.2.11 Place crushed drum or can in designated shipping container.

8.2.12 Repeat Steps 8.2.1 through 8.2.12 for additional drums to be crushed.

9.0 **APPLICABLE FORMS**

NONE

6989

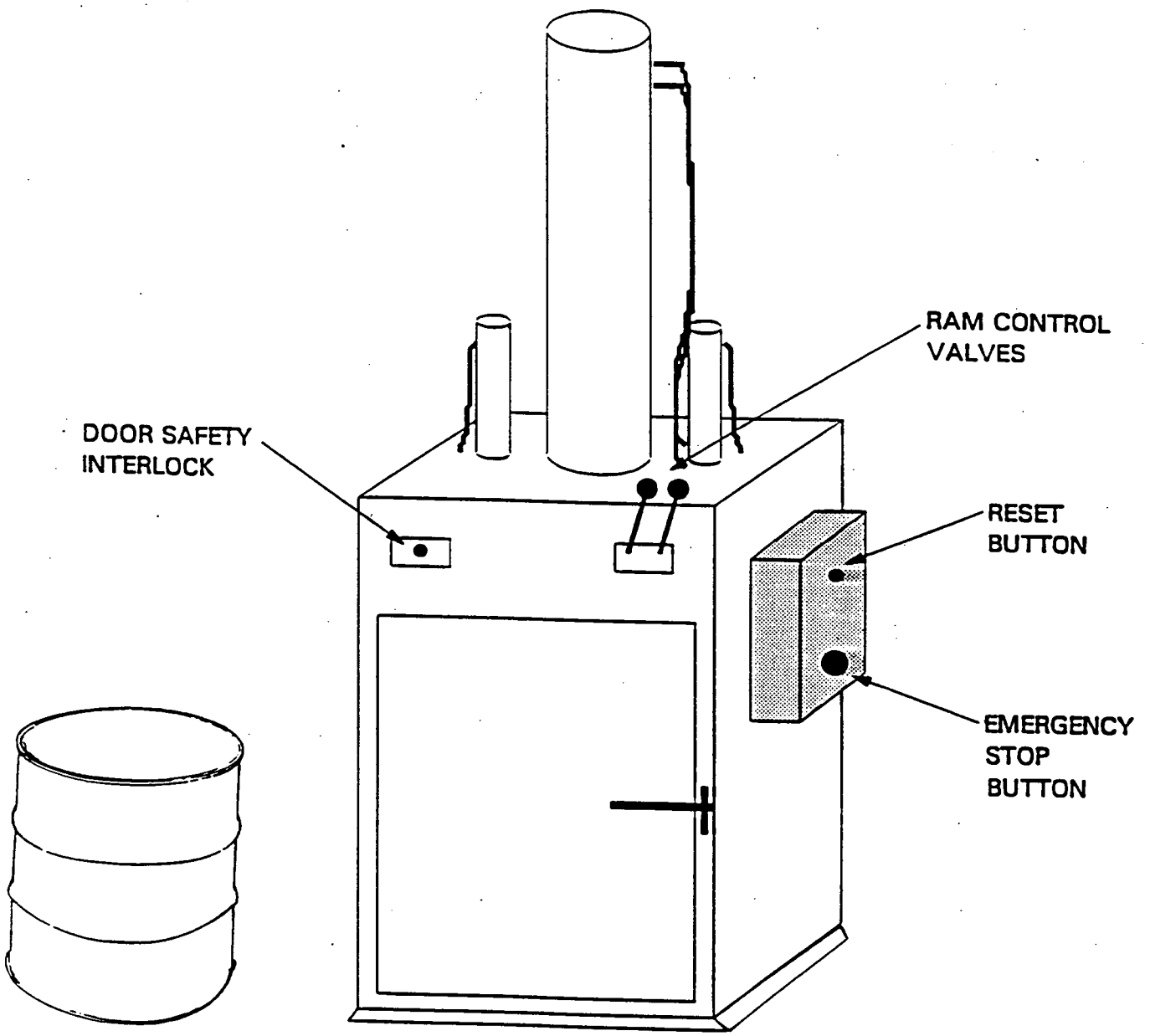

DRUM CRUSHER LAYOUT
Figure 1

RECORD OF ISSUE/REVISIONS

DATE	REV. NO.	DESCRIPTION AND AUTHORITY
01-11-95	0	Procedure required for Crushing Drums using TEEMARK® DRUM PACKER/CRUSHER per Request No. P94-0483, initiated by D. Morris.

6989

CONTROL NUMBER: FER-0411

SITE PROCEDURE PT-0009

REVISION NO. 2

CONTAMINATED TRASH DUMPSTERS

Effective Date:

05-01-95

Originator (Subject Expert): David Morris — April 24, 1995 Date

Checker Concurrence: Matt Harper — 4-24-95 Date

APPROVED BY: Michael L. West, Vice President of Waste Programs Management — 4-24-95 Date

FERNALD ENVIRONMENTAL MANAGEMENT PROJECT

Fernald Environmental Restoration Management Corporation
P. O. Box 538704
Cincinnati, Ohio 45253-8704

Title: **CONTAMINATED TRASH DUMPSTERS**	DOCUMENT NO: PT-0009	
COMPLIANCE WITH THIS PROCEDURE IS MANDATORY WHILE PERFORMING THE ACTIVITIES WITHIN ITS SCOPE	Date: 05-01-95	Revision No. 2
	Page 1 of 12	

TABLE OF CONTENTS

SECTION	TITLE	PAGE
1.0	PURPOSE	3
2.0	SCOPE	3
3.0	REFERENCES	3
4.0	RESPONSIBILITIES	3
5.0	GENERAL	5
6.0	PREREQUISITES	5
	6.1 INDUSTRIAL SAFETY AND HEALTH REQUIREMENTS	5
	6.2 PERSONNEL AND ADMINISTRATIVE REQUIREMENTS	6
7.0	PROCEDURE	7
	7.1 BAGGING CONTAMINATED TRASH	7
	7.2 FILLING CONTAMINATED TRASH DUMPSTERS	8
	7.3 TRANSPORTING PROHIBITED ITEMS	10
	7.4 DUMPSTER MAINTENANCE AND INSPECTION	10
8.0	DRIVERS	11
9.0	DEFINITIONS	11

LIST OF TABLES

TABLE 1 - NTS WASTE STREAM "CONTAMINATED TRASH" 12

Title: **CONTAMINATED TRASH DUMPSTERS**	DOCUMENT NO: PT-0009	
COMPLIANCE WITH THIS PROCEDURE IS MANDATORY WHILE PERFORMING THE ACTIVITIES WITHIN ITS SCOPE	Date: 05-01-95	Revision No. 2
	Page 2 of 12	

ISSUE AND REVISION SUMMARY

Revision	Date	Description of Issue or Revision
0	10-18-93	Reissued to update to current requirements per Request No. P93-1006, initiated by C. Gilbert. Also CIO C93-717 (P93-1007) was incorporated.
1	05-04-94	Revised to incorporate CIOs C93-757 (per Request P94-0248) and C94-002 (per Request P94-0249).
2	05-01-95	Site procedure issued to replace SOP 20-C-604 per Request No. S94-205, initiated by D. Morris. Procedure was formatted to new system (MS-1001) and updated to current operation.

1.0 PURPOSE

1.1 This procedure provides the instructions for bagging contaminated trash and filling, transporting, maintaining, and inspecting trash dumpsters for contaminated trash in the Controlled Area at the Fernald Environmental Management Project (FEMP).

2.0 SCOPE

2.1 This procedure applies to personnel involved in the disposal of contaminated trash.

3.0 REFERENCES

3.1 QA-0001, "Deviation and Corrective Action Reporting"

3.2 PT-0010, "Collection and Disposal of Controlled Area Office Trash"

4.0 RESPONSIBILITIES

4.1 Supervisors

- Ensure that personnel responsible for disposing of contaminated trash into the contaminated trash dumpsters are qualified per the established training requirements identified by the Department/Section Manager.
- Maintain training records of personnel who are using the dumpsters.
- Provide training records to Waste Management upon request.
- Initiate FERMCO work package.
- Contact Radiological Control when trash needs to be retrieved from the contaminated dumpster.

4.2 Contaminated Trash Generators ensure that prohibited items (refer to Table 1) are not placed into trash receptacles and that all government property discarded as trash has been documented.

4.3 Dumpster Owners

- Ensure that designated contaminated trash dumpster access doors remain locked when not in use.
- Ensure that contaminated trash does not accumulate around the dumpsters by notifying Transportation that the container is full and requires dumping.

4.0 RESPONSIBILITIES

4.3 Dumpster Owners (cont.)

- Perform a physical surveillance of the container and the surrounding area twice a day.
- Ensure the Prohibited Items List is attached to each end of the designated trash dumpster with updated information.
- Contact Transportation to arrange the pick-up of a full dumpster.
- Maintain ownership (or delegate ownership) of the key to open the Waste Programs Management lock on the contaminated trash dumpster.
- Notify Waste Operations Support when key control has been delegated to someone other than the designated key-holder.
- Notify Waste Operations Support of problems associated with contaminated trash dumpsters.
- Ensure that unidentified (unlabelled) bags that have been "dropped" at the dumpster are marked with a large red "X" and placed in the dumpster for segregation and internal inspection at the contaminated trash baler.
- Coordinate with Contaminated Trash Handlers to ensure that bags are inspected visually (externally) and prohibited items are detected and segregated at the point of generation.
- Ensure that only labeled, acceptable, and contaminated trash is deposited in dumpsters and ensure that only authorized contaminated trash handlers deposit trash into dumpsters.
- Complete Deviation and Corrective Action Reports pertaining to deviations identified by Performance/Quality Assurance (P/QA).

4.4 Contaminated Trash Handlers/MVOs comply with this procedure.

4.0 **RESPONSIBILITIES** (cont.)

4.5 Waste Operations Support

- Periodically update the prohibited items list that is posted on the contaminated trash dumpster.
- Notify the appropriate contact person from the list posted on each contaminated dumpster if prohibited items are found.
- Maintain a list of Dumpster Owners.
- Retain duplicate keys to the dumpster locks.
- Determine placement of contaminated trash dumpsters to better serve the site needs.
- Coordinate with Dumpster Owners to ensure that authorized Contaminated Trash Handlers deposit waste material in dumpsters.

4.6 Quality Control (QC)

- Perform monthly inspections of the dumpsters.
- Forward copies of Deviation and Corrective Action Reports to Waste Operations Support and notify Dumpster Owner(s) of deviations.
- Evaluate the Contaminated Trash Dumpster per the Inspection Checklist form and documentation from the package certifiers (pre-baled trash inspection) and baler operators.

5.0 **GENERAL**

None

6.0 **PREREQUISITES**

6.1 INDUSTRIAL SAFETY AND HEALTH REQUIREMENTS

6.1.1 A FERMCO Work Permit shall be initiated by the Supervisor-in-Charge.

6.1.2 All posted, verbal, and written health and safety requirements shall be obeyed.

6.0 PREREQUISITES

6.1 INDUSTRIAL SAFETY AND HEALTH REQUIREMENTS (cont.)

6.1.3 Leather-palm gloves shall be worn when handling rough materials.

6.1.4 Contaminated trash shall not accumulate around the dumpsters.

6.1.5 Any circumstance which could have resulted in the inhalation, ingestion, or absorption of a hazardous material shall immediately be reported to a supervisor or to the Assistant Emergency Duty Officer (AEDO), who will immediately report the circumstances to Medical and Industrial Hygiene. The involved personnel shall be directed by the supervisor or AEDO as to when and where to report for medical evaluation, completion of an Incident Investigation Report (IIR) (Form No. FS-F-1458), and submitting bioassay samples (e.g., blood, urine). Employees are responsible for complying with any additional requirements as specified by S&H.

6.1.6 Any circumstance which could have resulted in an intake of radioactive materials by inhalation, ingestion, or absorption shall immediately be reported to a supervisor. The supervisor shall immediately report the circumstance of possible radioactive materials intake to S&H Radiological Control Department for evaluation. When the suspect isotope is uranium, the involved personnel shall report to the Urine Sampling Station at the end of their shift to complete an Incident Investigation Report (IIR) (Form No. FS-F-1458), and submit an incident urine sample. The involved personnel shall also report to the Urine Sampling Station at the start of their next shift to submit a follow up urine sample. When the suspect isotope is other than uranium, the involved personnel shall report to the Dosimetry Section of the Radiological Control Department for further determination actions. Employees are responsible for complying with additional requirements as specified by the Radiological Control Section.

6.2 PERSONNEL AND ADMINISTRATIVE REQUIREMENTS

6.2.1 Contaminated Trash Handlers and Motor Vehicle Operators shall complete Radiation Worker Training II and be trained in accordance with this procedure.

6.2.2 Waste Operations Support shall prepare and maintain a list of Dumpster Owners.

6.2.3 Duplicate keys to the dumpster locks shall be made and retained by Waste Operations Support.

6.0 PREREQUISITES

6.2 PERSONNEL AND ADMINISTRATIVE REQUIREMENTS (cont.)

6.2.4 Placement of contaminated trash dumpsters shall be determined and completed by Waste Operations Support.

7.0 PROCEDURE

NOTE: The supervisor shall ensure that personnel are qualified per the established training requirements identified by the Division/Department Manager.

7.1 BAGGING CONTAMINATED TRASH

Contaminated Trash Handler

7.1.1 Dispose of small or loose items as follows:

a. Inspect small/loose material for prohibited items (refer to Table 1). If any prohibited items are present, set aside and notify individuals listed in Table 1 for disposition of prohibited items.

b. Place the acceptable trash in a clear plastic bag and continue to visually examine the trash for prohibited items or categories of waste as the bag is filled.

(1) If inspection of the trash is not possible, perform a visual inspection through the bag.

(2) If prohibited items are found, return the bag to its point of generation, remove items from the trash, and notify individuals listed in Table 1 for disposition instructions of the prohibited items.

c. Gather or twist the open end of the bag until the opening is closed.

d. Secure the bag with tape.

e. Clearly mark the building, office area, or project from which the trash originated and the job name and jobsite contact person on the accumulation bag with a permanent marker or paint pen.

7.1.2 If prohibited items were found, notify also the Dumpster Owner or Waste Operations Support.

7.1 BAGGING CONTAMINATED TRASH (cont.)

Waste Operations Support

7.1.3 Determine the appropriate action to take for the prohibited items.

Contaminated Trash Handler

7.1.4 Dispose of the prohibited items in an approved manner (refer to Table 1) as instructed by the supervisor or Waste Operations Support.

7.2 FILLING CONTAMINATED TRASH DUMPSTERS

Contaminated Trash Handler

7.2.1 Contact the Dumpster Owner (listed on the information sheet posted on the dumpster) to obtain approval for disposal and to obtain the lock key. Direct any questions regarding the Dumpster Owner List to Waste Operations Support.

NOTE: **Contaminated trash dumpster access doors must remain locked when not in use.**

Dumpster Owner

7.2.2 Upon request for a key, verify that the individual is a trained contaminated trash handler and a designated key-holder.

a. If the handler has completed the training, release the applicable key.

b. If the handler is NOT trained, do not release the key and contact Waste Operations Support.

Contaminated Trash Handler

7.2.3 Unlock the dumpster.

> **CAUTION:**
>
> **PIPING AND PIECES OF WOOD OVER TWO FEET IN LENGTH SHALL NOT BE PLACED IN THE DUMPSTER.**

7.2.4 Place bulky items (such as oversize pieces of cardboard) directly into the dumpster.

7.2 FILLING CONTAMINATED TRASH DUMPSTERS (cont.)

Contaminated Trash Handler

7.2.5 Inspect the bags for damage.

a. Place damaged bags in undamaged bags.

b. Identify the bag with the same markings as the damaged bag.

7.2.6 Check bags for identification marking as required in 7.1.1, substep e.

NOTE: Green-tinted "clean office trash bags" shall not be placed in the dumpsters. Clean bags are disposed of according to PT-0010, "Collection and Disposal of Controlled Area Office Trash." Clean office trash in green-tinted bags is accumulated next to the contaminated trash dumpsters. The bags are picked up by Transportation twice per week.

7.2.7 If unidentified trash bags are found at the dumpster, complete the following steps:

a. Notify Waste Operations Support.

b. Inspect trash for prohibited items. If items are found, contact Radiological Safety and determine the best area to retrieve the prohibited items.

c. Mark bag with a LARGE X and place in dumpster.

NOTE: Unsecured bags or damaged bags shall not be placed in the dumpster.

7.2.8 Check dumpster to ensure space is available to dispose of trash.

a. If space is available, place identified contaminated trash (excluding items in Table 1) in the dumpster.

7.2 FILLING CONTAMINATED TRASH DUMPSTERS (cont.)

Contaminated Trash Handler

b. If the dumpster is full, do not place trash outside the dumpster. Return trash to its generation point (i.e., facility, contamination area, receptacle).

NOTE: All waste will be staged at the point of generation, under control of the cognizant supervisor, until the dumpster is emptied or an additional container can be delivered by Transportation.

7.2.9 Lock the dumpster.

7.2.10 Return the key to the Dumpster Owner.

7.2.11 Notify the Dumpster Owner when a dumpster is full and requires emptying.

Dumpster Owner

7.2.12 When a dumpster is full, arrange with Transportation for a Motor Vehicle Operator to transport the full dumpster.

7.3 TRANSPORTING PROHIBITED ITEMS

Motor Vehicle Operator (MVO)

7.3.1 Pick up prohibited items that have been segregated.

7.3.2 Transport prohibited items to the locations designated by the appropriate contact person per Table 1.

7.4 DUMPSTER MAINTENANCE AND INSPECTION

Dumpster Owner

7.4.1 Perform a physical surveillance of the dumpster and surrounding area twice per day, early in the morning and again after lunch to ensure that an accumulation does not occur.

7.4.2 Ensure that the designated contaminated trash dumpster access doors remain locked when not in use.

7.4 DUMPSTER MAINTENANCE AND INSPECTION (cont.)

Quality Control

7.4.3 Inspect dumpsters (monthly) and document the inspection on the Inspection Checklist form per the applicable department procedure.

7.4.4 Notify the Dumpster Owner and Waste Operations Support of the inspection results.

a. If a deviation is recorded, complete a Deviation and Corrective Action Report per QA-0001, "Deviation and Corrective Action Reporting", and forward copies to Waste Operations Support.

b. Notify Dumpster Owner of any deviation.

8.0 DRIVERS

8.1 RM-0012, "Quality Assurance Program Description"

8.2 NVO-325, "Nevada Test Site Waste Acceptance Criteria"

9.0 DEFINITIONS

9.1 Contaminated Trash Dumpsters - Secured containers for contaminated trash that are located throughout the Controlled Area.

9.2 Contaminated Trash Generator - Any person that has a TLD who works in, or will access, the Controlled Area to perform duties, and subsequently be disposing of trash.

9.3 Contaminated Trash Handler - Any person (Porter, Laborer, HAZWAT, Chemical Operator, sub-contractor, Motor Vehicle Operator, or Radiological Control Representative) that will collect contaminated trash for disposal and/or place trash in Contaminated Trash Dumpsters.

9.4 Contaminated Trash - Any waste suspected to have contaminated material that would prevent the disposal at a sanitary landfill.

9.5 Prohibited Items - Those items designated per NVO-325 waste acceptance criteria (listed in Table 1).

Title: **CONTAMINATED TRASH DUMPSTERS**	DOCUMENT NO: PT-0009	
COMPLIANCE WITH THIS PROCEDURE IS MANDATORY WHILE PERFORMING THE ACTIVITIES WITHIN ITS SCOPE	Date: 05-01-95	Revision No. 2
	Page 12 of 12	

TABLE 1 - NTS Waste Stream -- ONLO-00000007
"Contaminated Trash"

ALLOWED ITEMS*	RESTRICTIONS
Certain Batteries	No Lead-Acid (vehicle), Ni-Cad (rechargeable) Lithium or Mercury (typically in lab equip)
Empty Cans	No Prohibited Item Residue
Metal	Less than 2 ft. in length, free from grease, oil, residues, lead-based paint
Paper/Cardboard	None
Personal Protective Equipment (Anti-C's, Boots, Gloves, Tyvek)	Unless specifically restricted by Work Plan
Plastic	None
Rope, Twine, String	None
Styrofoam, Rubber	None
Wood	Less than 2 ft. in length, free from creosote, residue, stains, lead-based paint

* All government property discarded as trash must be documented.

Dumpster Usage Instructions:
All trash MUST be marked with the building or area of origin.
All trash MUST be marked with the Job name and Job Site contact person.
All trash MUST be placed inside the dumpster (except green-bagged Office Trash).

PROHIBITED ITEMS	EXAMPLES	WHERE TO GO	WHO TO CONTACT
Asbestos Containing Material	Transite, Pipe Insulation, Floor Tile	----	Leigh Fisher, 738-8638
Batteries	Auto, Ni-Cad Rechargeable, Lithium or Mercury	Plant 6	Brian Huffman, 738-9054
Compressed Gases and Aerosol Cans (unpunctured)	Spray Paint, Deodorant Cans Spray Disinfectant Cleaner, WD-40, Propane	Plant 1	J. Fitzgerald, 738-6086
Glass	Bottles, Jars, Light Bulbs	Plant 1	J. Fitzgerald, 738-6086
Lead-bearing Material	Lead metal, Pipe dope, Lead flashing, Oil filters	Satellite Accumulation Areas	Brian Huffman, 738-9054
Liquids	Water, Coffee, Ice, Pop	Sink	----
Mercury-bearing Material	Switches, Vacuum Pumps	Satellite Accumulation Areas	Brian Huffman, 738-9054
Particulates	Ashes, Dust, Pad Sweepings	----	Chuck Menche, 738-6428
Solvent Soaked Rags	Kerosene, Toluene, Acetone	Satellite Accumulation Areas	Brian Huffman, 738-9054
Uncontaminated Trash	Office Trash, Paper, Non-radioactive trash	----	Chuck Menche, 738-6428
Wood	Pallets, 2x4's, Lumber	Plant 1	Sue Ison, 738-9311

TABLE OF CONTENTS

NON-CONTROLLED COPY

Section	Page
1.0 Purpose	3
2.0 Scope	3
3.0 Responsibilities	3
4.0 Safety Requirements	4
5.0 Procedure	5
5.1 General Information	5
5.2 Inspection of LLRW and NM in Drums	5
5.3 Inspection of Metal Boxes	6
6.0 Definitions	6
7.0 Applicable Documents	7
7.1 Drivers	7
7.2 References	7
TABLE 1 CONTAINER INSPECTION CATEGORIES	8
FIGURE 1 FEMP CONTAINER INSPECTION RECORD	10
FIGURE 2 PLANT WIDE T-HOPPER/J-HOPPER INSPECTION FORM	12

RECORD OF ISSUE/REVISIONS

DATE	REV. NO.	DESCRIPTION AND AUTHORITY
12-30-94	0	Document required for Inspection of Low Level Radioactive Waste (LLRW) and Nuclear Material (NM) Containers per Request No. P94-0490 initiated by K. Belgrave. The document format does not conform to current RSO SOP format per PO-D-026; format changed at the request of 20-C-020 owner.

NON-CONTROLLED COPY

1.0 PURPOSE

The purpose of this procedure is to direct the inspection of Low Level Radioactive Waste (LLRW) and Nuclear Material (NM) containers.

2.0 SCOPE

This procedure is applicable to the designated LLRW and NM storage areas.

3.0 RESPONSIBILITIES

3.1 **Supervisors** shall be responsible for the following:

- Notifying support organizations and coordinating support organization activities if their assistance is required.
- Ensuring that personnel satisfy all training requirements including training in this procedure, to perform the assigned task.
- Signing and/or distributing documentation as required by this procedure.
- Ensuring that the inspections required by this procedure are performed.
- Upon notification of a spill, immediately reporting the incident by telephone or radio to the Assistant Emergency Duty Officer (AEDO), (See SSOP-0067, "Spill Incident Reporting and Cleanup")
- Contacting Industrial Hygiene or Radiological Control to determine the appropriate respiratory protection and personnel protective equipment (PPE) for the task to be performed.
- Issuing the required respiratory protection and PPE to operators as required by applicable permits.
- Ensuring that any required Radiological contamination surveys are performed prior to placing containers of LLRW in storage.
- Reviewing applicable Material Safety Data Sheets (MSDS) and Material Evaluation Forms (MEFs) with operators.

0883

3.0 RESPONSIBILITIES (cont.)

3.2 **Environmental Safety and Health (ES&H)** shall be responsible for performing surveillance of LLRW and NM storage areas according to regulatory requirements.

3.3 **Operators** shall be responsible for complying with this SOP.

3.4 **Materials Control and Accountability** shall be responsible for maintaining a current LLRW and NM inventory, and recording drum movements.

3.5 **Waste Characterization** shall be responsible for the proper characterization and classification of FEMP material streams.

3.6 **Quality Assurance** shall perform surveillance of LLRW and NM storage Area records to ensure adequacy and completeness.

4.0 SAFETY REQUIREMENTS

- Safety glasses shall be worn in the Controlled Area unless other eye/face protection is required by the supervisor, ES&H, or posted signs.
- Respiratory protection and PPE provided by the supervisor shall be worn when required.
- Leather-palm gloves shall be worn when handling drums, operating equipment, and when handling rough or sharp-edged material.
- Any spill of LLRW and/or NM outside of its container shall be reported to the Supervisor immediately.
- A HEPA type filter vacuum cleaner or a vacuum system approved by Industrial Hygiene shall be used during spill cleanup with a current DOP test label properly affixed to the vacuum.
- Communication devices and emergency response equipment shall be available to personnel performing tasks per this SOP.
- Personnel shall have reviewed and be familiar with MSDS's and MEF's for hazardous chemical/materials that may be used or encountered.

4.0 SAFETY REQUIREMENTS (cont.)

- Any circumstance which could have resulted in an intake of radioactive materials by inhalation, ingestion or absorption shall immediately be reported to a Supervisor. The Supervisor shall immediately report the circumstance of possible radioactive materials intake to ES&H Radiological Control Department for evaluation. When the suspect isotope is uranium, the involved personnel shall report to the Urine Sampling Station at the end of their shift to complete an Incident Investigation Report (IIR) (Form No. FS-F-1458), and submit an incident urine sample. The involved personnel shall also report to the Urine Sampling Station at the start of their next shift to submit a follow up urine sample. When the suspect isotope is other than uranium, the involved personnel shall report to the Dosimetry Section of the Radiological Control Department for further determination of actions. Employees are responsible for complying with additional requirements as specified by the Radiological Control Section.

- Any situation which could have resulted in the inhalation, ingestion, or absorption of a hazardous material shall immediately be reported to a Supervisor or to the Assistant Emergency Duty Officer (AEDO), who will immediately report the circumstances to Medical and Industrial Hygiene. The involved personnel shall be directed by the Supervisor or AEDO as to when and where to report for medical evaluation, completion of an Incident Investigation Report (IIR) (Form No. FS-F-1458), and submitting bioassay samples (e.g. blood, urine). Employees are responsible for complying with any additional requirements as specified by ES&H.

- All personnel performing duties covered by this procedure shall adhere to all sign postings and requirements including but not limited to RWP's.

5.0 PROCEDURE

5.1 GENERAL INFORMATION

5.1.1 Additional information, warnings, cautions and notes are included, in bold print, in the step to which they apply.

5.2 INSPECTION OF LLRW AND NM IN DRUMS, WHITE METAL BOXES, AND ISO CONTAINERS

5.2.1 When inspecting pallets/drums use a ladder to better see drums above the second level.

5.2.2 Inspect the containers of LLRW and NM per the following schedule.

a. Inspect containers stored in unsheltered areas weekly.

b. Inspect containers stored in sheltered areas biweekly.

c. Inspect containers of uncharacterized material daily.

0806

5.0 PROCEDURE (cont.)

5.2.3 Inspect the containers per the criteria and ensure the completion of the corrective actions stated in the following:

a. Table 1, Container Inspection Categories".

5.2.4 Document the container condition on the "FEMP Drum Inspection Form" (Figure 1).

5.2.5 Upon completion of the inspection, the inspector shall sign and date the form and give the completed inspection forms to the Supervisor to be signed and dated. **The Supervisor shall ensure that the appropriate corrective actions are completed, and then transmit the forms to Waste Operations Support. (See Table 1 of this procedure and SSOP-0067, "Spill Incident Reporting and Cleanup"). Deficiencies shall be noted on inspections until corrected.**

5.3 INSPECTION OF J-HOPPERS AND T-HOPPERS

5.3.1 Inspect the LLRW stored in J-Hoppers and T-Hoppers weekly.

5.3.2 Inspect the J-Hoppers and T-Hoppers per the criteria listed on the "Plant Wide T-Hopper/J-Hopper Inspection Form" (Figure 2).

5.3.3 Document the inspection results and completion of appropri actions on the "Plant Wide T-Hopper/J-Hopper Inspection Form".

5.3.4 Upon completion of the inspection the Inspector shall sign and date the form and, give the completed inspection forms to the Supervisor to be signed and dated with badge number included. **The Supervisor shall ensure that the appropriate corrective actions are completed and then transmit the forms to Waste Operation Support. Deficiencies shall be noted on inspections until corrected.**

6.0 DEFINITIONS

- Bulge - A swollen area, a convex distortion, an outward bend which jeopardizes the integrity of the container.
- Corrosion - A container exhibiting exterior rust which is flaking or discoloration and bulging from interior rust.
- Dent - A crease, depression or hollow made by blow or pressure: a concave distortion which jeopardizes the integrity of the container. A dent in the top or bottom rim.
- Hole - An opening in the container including a breach, gouge, punctu or leak.

6989

6.0 DEFINITIONS (cont.)

- Low Level Radioactive Waste (LLRW) - Waste that contains radioactivity and is not classified as high level waste, spent nuclear fuel, transuranic waste, spent nuclear fuel or 11 e(2) byproduct as defined by DOE Order 5820.2A.

- Nuclear Material (NM) - Thorium; depleted or normal uranium; or enriched uranium <20% U_{235} by weight.

- Spill Incident - A spill includes any spilling, leaking, pumping, pouring, injection, escaping, emitting, emptying, leaching, releasing, dumping, discharging or disposing of a hazardous substance, extremely hazardous substance, hazardous material, toxic pollutant. (Ref. SSOP-0067).

7.0 APPLICABLE DOCUMENTS

7.1 DRIVERS

- DOE Order 5480.19
- RM-0012, "Quality Assurance Program Description"

7.2 REFERENCES

- SSOP-0067, "Spill Incident Reporting and Cleanup"
- SOP 20-C-600, "Overpacking Defective Containers"
- SOP 20-C-606, "Hazardous Material Spill Cleanup"

0888

TABLE 1

CONTAINER INSPECTION CATEGORIES

TYPE	CHARACTERISTIC	CORRECTIVE ACTION
I	Material flowing from the container with an accumulation on the pallet or pad.	1. Notify the Supervisor. **The Supervisor shall notify the AEDO. The Supervisor shall initiate an Occurrence Report (See SSOP-0067, "Spill Incident Reporting and Cleanup").** 2. Immediately stop or contain the leak. 3. Record on the inspection form that the container requires mitigation within 24 hours. 4. Complete additional cleanup as necessary.
II	Material on the container exterior only; no material on the pallet or pad.	1. Record the leak on the inspection form. 2. Notify the Supervisor. **The Supervisor shall initiate an Occurrence Report and notify the AEDO and the Utilities Engineer, (See SSOP-0067, "Spill Incident Reporting and Cleanup"). The Supervisor shall revie the completed inspection forms to prioritize containers for transfer to the overpacking area and subsequent mitigation.**
III	The container exterior is discolored with visible contamination; no material release. Severe corrosion with deep pitting and/or metal flaking. Dents and/or bulges which affect container to the degree of potential release.	1. Record the condition on the inspection form. 2. Notify Supervisor The drum requires disposition as directed by the supervisor.

FEMP CONTAINER INSPECTION FORM

Inspector (Print)_____

Plant/Location _____

ITEM NO.	DRUM NO.	AREA	ROW	STACK	DRUM INSPECTION CATEGORY	TIME	CORRECTIVE ACTION (See Note)	DATE/TIME CORRECTIVE ACTION

NOTE: Type 1 leakers must be corrected within 24 hours.

COMMENTS_____

_____

_____

Inspector's signature below verifies that all drums in this location have been inspected.

Inspector's Signature _____ Badge No. _____ Date _____

Supervisor's Signature _____ Badge No. _____ Date _____

Distribution: Transmit completed inspection forms to Waste Operations Support.

FIGURE 1
FEMP CONTAINER INSPECTION RECORD

000765

6989

0800

ITEM No.	ITEM DESCRIPTION	ACCEPTABLE YES/NO	OBSERVATION AND/OR CORRECTIVE ACTION	D ACTION COMPLETE
1	Signs (i.e., Radiological Postings, Authorized Personnel Only, etc.)			
2	Boundary Markers (Chains, Rope, etc.)			
3	Surrounding Area Condition (i.e., Dead Vegetation)			
4	Hopper Integrity			
5	Evidence of Leakage/Release			
6	Hopper Openings are Closed			
7	Hopper Condition (Dents, Holes, Corrosion, etc.)			

NOTE: For any T-Hoppers/J-Hoppers that are deficient in any of the above areas, include the inventory and container number with the deficiency and the corrective action(s) to be taken.

Comments:_____

INSPECTOR'S SIGNATURE:_____ BADGE NO._____ DATE_____

SUPERVISOR'S SIGNATURE:_____ BADGE NO._____ DATE_____

Distribution: Transmit completed inspection forms to Waste Operations Support.

FIGURE 2
PLANT WIDE T-HOPPER/J-HOPPER INSPECTION FORM

TABLE OF CONTENTS

NON-CONTROLLED COP

PAGE	SECTION	DESCRIPTION
3	1.0	PURPOSE
3	2.0	SCOPE
3	3.0	RESPONSIBILITIES
4	4.0	SAFETY REQUIREMENTS
5	5.0	PROCEDURE
13	6.0	DEFINITIONS
13	7.0	APPLICABLE DOCUMENTS
15	FIGURE 1	GAS, LPG OR DIESEL FUELED EQUIPMENT OPERATOR'S CHECKLIST, FORM FS-F-2414 (Typical)
17	FIGURE 2	NOTICE TO OPERATOR, FS-F-1413 (Typical)
18	FIGURE 3	DRUM LIFTING DEVICE - ONE DRUM (Typical)
19	FIGURE 4	DRUM LIFTING DEVICE - TWO DRUM (Typical)
20	FIGURE 5	NM TRANSFER RECORD/NM RECEIPT RECORD/MATERIAL IDENTIFICATION RECORD FORMS FS-F-1990, -2220,-2221 (68/69 Card) (Typical)
21	FIGURE 6	NUCLEAR SAFETY OPERATIONAL AUTHORIZATION, FORM FS-F-1354 (Typical)

RECORD OF REVISIONS

DATE	REV. NO.	DESCRIPTION AND AUTHORITY
02-06-95	0	Procedure for onsite movement of low level radioactive waste and nuclear materials is required per Request P94-0485 initiated by K. Belgrave. The document format does not conform to current RSO SOP format per PO-D-026, format changed at the request of 20-C-111 document owner.

1.0 PURPOSE

The purpose of this document is to direct operations personnel in the onsite movement of containers of Low Level Radioactive Waste (LLRW) and Nuclear Material (NM), including Enriched Restricted Nuclear Material (ERNM) between and within Plants.

2.0 SCOPE

This procedure is applicable to material movements conducted with the use of motor vehicles or heavy equipment by FERMCO personnel.

3.0 RESPONSIBILITIES

3.1 Supervisors shall be responsible for the following:

- Ensuring that the operations personnel possess the training and qualifications required to operate the required vehicle and perform the task covered by this procedure.
- Contacting Industrial Hygiene and/or Radiological Control to determine the appropriate respiratory protection and personal protective equipment (PPE) and issuing the required respiratory protection and PPE to the operating personnel.
- Monitoring the use of PPE and respiratory protection equipment to ensure compliance with H&S requirements.
- Coordinating with other sections and/or Plants in the receipt, shipment and storage of Low Level Radioactive Waste (LLRW) and Nuclear Material (NM).
- Ensuring that all required documentation of material movements is completed and is given to the appropriate personnel as indicated herein upon completion of the activity.
- During movement of Mass Restricted Nuclear Material, ensuring the following:
  - That a "Nuclear Safety Operational Authorization", Form No. FS-F-1354 (Figure 6) has been submitted to Nuclear Criticality Safety Department and approved authorizing the movement.

3.0 RESPONSIBILITIES (cont.)

- That all personnel involved in performing such a movement know and understand the criticality rules to be followed.

- Coordinating with other departments in order to maintain operations personnel qualifications.

3.2 **Materials Control & Accountability (MC&A)** shall be responsible for preparing and processing required material movement documentation.

3.3 The **Transportation Department** shall be responsible for the training and qualification of Motor Vehicle Operators (MVOs) and Heavy Equipment Operators (HEOs).

3.4 **Remediation Site Operations (RSO)** shall be responsible for providing training for HAZWATS.

3.5 **MVO's, HEO's and HAZWATS** shall be responsible for complying with this procedure.

3.6 Waste Operations Support shall designate the storage locations.

4.0 SAFETY REQUIREMENTS

- Safety glasses shall be worn in the Process Area unless other eye/face protection is required by the Supervisor, ES&H, or posted signs.

- Personal protective equipment and clothing specified by ES&H shall be worn -- required.

- Leather-palm gloves shall be worn when handling drums, operating equipment, and when handling rough or sharp-edged materials.

- Chemical resistant gloves applicable to the material type shall be worn when handling liquids and contaminated solids.

- In the case of contact with acids or caustics, contaminated clothing shall be removed and the affected body area thoroughly flushed with water in a Safety Shower/Eye Bubbler. Injured personnel shall report to Medical Services for treatment as soon as possible.

- Personnel shall have reviewed and be familiar with MSDSs for hazardous chemicals/materials that may be used or encountered.

4.0 SAFETY REQUIREMENTS

- Any circumstance which could have resulted in an intake of radioactive materials by inhalation, ingestion, or absorption shall immediately be reported to a Supervisor. The Supervisor shall immediately report the circumstance of possible radioactive materials intake to ES&H Radiological Control Department for evaluation. When the suspect isotope is uranium, the involved personnel shall report to the Urine Sampling Station at the end of their shift to complete an Incident Investigation Report (IIR) (Form No. FS-F-1458), and submit an incident urine sample. The involved personnel shall also report to the Urine Sampling Station at the start of their next shift to submit a follow up urine sample. When the suspect isotope is other than uranium, the involved personnel shall report to the Dosimetry Section of the Radiological Control Department for further determination of actions. Employees are responsible for complying with additional requirements as specified by the Radiological Control Section.

- Any situation which could have resulted in the inhalation, or absorption of a hazardous material shall immediately be reported to a Supervisor or to the Assistant Emergency Duty Officer (AEDO), who will immediately report the circumstance to Medical and Industrial hygiene. The involved personnel shall be directed by the Supervisor or AEDO as to when and where to report for medical evaluation, completion of an Incident Investigation Report (IIR) (Form No. FS-F-1458), and submitting bioassay samples (e.g. blood, urine). Employees are responsible for complying with any additional requirements as specified by ES&H.

- All personnel performing duties covered by this procedure shall adhere to all sign postings and requirements including but not limited to RWP's.

5.0 PROCEDURE

5.1 GENERAL INSTRUCTIONS

5.1.1 Additional information, Warnings, Cautions and Notes are included, in bold print, in the Step to which they apply.

5.1.2 Pallets can be lifted with a forklift from either end. When placing drums on a pallet, ensure that the resulting load is stable.

5.0 PROCEDURE (cont.)

5.1.3 Except in the cases of the following three exemptions, straps shall be used during the movement of pallets to secure the drums and reduce the chance of an accidental spill. Exemptions:

a. The use of hand-stackers to move drums on pallets,

b. Movement of one pallet of drums within the buildings or tension support structures, and

c. Movement of one pallet of drums within a defined work area either inside or outside. For example, if an outside area is set up for repalletizing drums, the movement of pallets within this limited area would not require straps.

The responsibility remains with the driver to determine the stability of the drums on a pallet prior to any movement. If the driver or the Supervisor determines that the load is unstable and should be strapped, the drums shall be secured with straps, regardless of the location or length of travel distance. A Supervisor shall not override the decision of a driver to strap drums.

Movement of multiple pallets and the movement of pallets to or from elevations above two stacks high shall require the use of straps for securing the drums. The requirement to strap drums for movement only applies to drum(s) on pallets.

5.1.4 Drums stored on pallets may be stacked four pallets high <u>only</u> in the following configurations and areas, and <u>only</u> when the listed necessary conditions are satisfied.

a. Permitted configurations:

1. Four pallets of 55-gallon drums.

2. Three pallets of 55-gallon drums with either one pallet of 85-gallon drums or one pallet with a 110-gallon drum on top.

5.0 **PROCEDURE** (cont.)

3. Two pallets of 55-gallon drums with two pallets of 85-gallon drums on top.

b. Permitted areas:

1. Tension Support Structure 4 (TS-4).

2. Tension Support Structure 5 (TS-5).

3. Tension Support Structure 6 (TS-6).

c. Drum storage other areas, may be stacked three high:

1. 3 pallets of 55 gallon drums.

2. 2 pallets of 55 gallon drums, 1 pallet of 85 or 110 gallon drums.

3. 1 pallet of 55 gallon drums, 2 pallets of 85 or 110 gallon drums.

4. Strap all drums on third level.

d. Necessary Conditions:

1. The pallets on which the drums are stored are in "good" condition. The pallets involved should be metal pallets or the treated wooden pallets.

2. The drums, especially 85-gallon drums, are centered on the pallets. All drums, regardless of capacity, when assembled on a pallet should be centered on the pallet and pushed close together. This ensures the load is centered on the pallet and improves stability. Proper centering of drums is especially critical for 85-gallon drums. 85-gallon drums should be placed three to a pallet in a triangle centered on the pallet. When properly centered, 85-gallon drums stick out three to four inches beyond the edge of the pallet. Without close attention, more of a drum may stick over the edge causing the pallet to become less stable when stacked.

3. Drivers are able to align the pallets vertically. Operators and drivers must work as a team during stacking activities. The driver is responsible for ensuring the load is stable prior to movement and for properly stacking the pallet. The Operator must assist the driver in positioning the pallet to ensure the pallets are not pushed together such that the drums become interlocked with the drums on an adjacent pallet. It is important to align the drums vertically to have a stable stack. Because 85-gallon drums will stick out over the edge of the pallet, caution must be observed to prevent interlocking and to ensure the stack is aligned vertically.

5.0 **PROCEDURE** (cont.)

4. Only enclosed cab forklifts with an extended backrest may be used to stack pallets four-high.

5.1.5 Metal boxes may be stacked 3 high.

5.1.6 The movement of the big white boxes and International Shipping Organization (ISO) containers requires that an escort/spotter be present during the movement.

5.1.7 ISO containers may be stacked 2 high on the Plant 1 pad.

5.2 INSPECTION OF EQUIPMENT

5.2.1 Prior to the movement of drums, inspect all equipment to be used in the drum movements for operating and safety condition. **The driver and Supervisor shall choose the vehicle to be used based on the task to be performed, the capacity of the vehicles available, the working space available, etc.**

5.2.2 Inspect the equipment per the instructions printed on the back of FEMP Form No. FS-F-2414, "GAS, LPG OR DIESEL FUELED EQUIPMENT OPERATOR'S CHECKLIST" (Figure 1). **Ensure that the preventative maintenance card/tag is current (See the "Notice To Operator" Form No. FS-F-1413, Figure 2). All defective or unsafe vehicle conditions must be corrected before the vehicle can be used.**

5.2.3 Document the results of the inspection on FEMP Form No. FS-F-2414 (Figure 1).

5.2.4 Immediately notify the Supervisor of any deficiencies.

5.2.5 Give the Supervisor the completed inspection form before the end of the shift during which the inspection was done.

5.3 MOVEMENT OF LOW LEVEL RADIOACTIVE WASTE (LLRW) AND NUCLEAR MATERIAL (NM)

5.3.1 For the movement of Enriched Restricted Nuclear Material (ERNM) See Section 5.4 of this procedure.

5.3.2 Movements of LLRW and NM within a Plant area are directed by the following instructions.

5.0 **PROCEDURE** (cont.)

a. Such movements shall be made as directed by the Supervisor. The Supervisor shall ensure that the MC&A records are updated to show any changes in location.

b. Movements are normally made with a team including HAZWAT's and MC&A. Follow all safety rules and operate the equipment in a safe manner to avoid injury to yourself or the HAZWAT and MC&A personnel. The involved HAZWAT personnel shall generate the movement documentation per SOP 20-C-623 "Receipt and Storage of Low Level Radioactive Waste and Nuclear Material" (Not Yet Issued).

c. Movements are normally made to accomplish a task which is directed by another procedure. Ensure that you know and understand the instructions in the other procedure that are directing the material movements. Drivers, who are involved in operations with containers of hydrogen generating materials, shall ensure that all the prescribed safety measures are in place before participating in those operations (See SOP 20-C-910, "Venting Potentially Explosive Drums"; and SOP 20-C-918, "Preparation For and Movement of Unvented Drums").

d. Some operations require the lifting of a drum or drums without the use of a pallet. This is done using a drum lifting device (barrel grab) (See Figures 3 and 4 for illustrations of typical devices). These devices attach to the forklift forks and lift the drum or drums by attaching to the upper lip of the drum.

e. When loading trailers for between Plant movements, ensure that the material is adequately positioned for weight distribution and is stable and secure against shifting during transport.

5.3.3 Movements of LLRW and NM between Plant areas are directed by the following instructions.

a. Such movements shall be made as directed by supervision.

b. Inspect the load for proper weight distribution.

5.0 **PROCEDURE** (cont.)

c. If the load is not stable, inform the Supervisor so that the condition is corrected.

d. Perform an item count of the load to check that the load matches the documents, NM TRANSFER RECORD/NM RECEIPT RECORD/MATERIAL IDENTIFICATION RECORD, FS-F-1990, -2220, -2221, (68/69 card), Figure 5.

e. Check that any required radiological surveys of the containers have been performed and documented. **The Supervisor of the shipping Plant shall have any required radiological surveys performed and shall provide the documentation of the performance of the surveys.**

f. Supervisor, shipping containers, request that shipping clerk generates 68/69 transfer cards. MC&A clerk generates and signs card on "Shipper" line, then gives cards to Supervisor shipping containers.

g. Supervisor, shipping containers, co-sign 68/69 cards on "Shipper" line.

h. Supervisor gives 68/69 cards to transport operator who moves containers, using shortest and most direct route. Operator signs on "Transportation" line and gives cards to Supervisor receiving load after it has been moved.

i. Receiving Supervisor directs HAZWAT to perform and fill out "Pre-Storage Checklist".

j. Upon completion of satisfactory "Pre-Storage Checklist", Supervisor signs on "Receiver" line of 68/69 card and turns cards over to MC&A clerk receiving containers who co-signs on "Receiver" line.

5.4 <u>MOVEMENT OF ENRICHED RESTRICTED NUCLEAR MATERIAL (ERNM)</u>

5.4.1 Movements of ERNM within a Plant area are directed by the following instructions.

a. Such movements shall be made as directed by the area Supervisor. **The movement of ERNM requires an authorization by Nuclear Criticality Safety. Check that a "NUCLEAR SAFETY OPERATIONAL AUTHORIZATION" (NSOA) Form No. FS-F-1354, (Figure 6), has been completed for the directed movement. Do not proceed with a ERNM movement without such authorization.**

6989

5.0 **PROCEDURE** (cont.)

b. Movements are normally made while working as a team with HAZWAT personnel. Follow all safety rules and operate the vehicle in a safe manner to avoid injury to yourself or the HAZWAT personnel. Ensure that both you and any involved HAZWAT personnel know and understand the criticality rules to be followed in making the directed movement. Do not proceed with such a material movement until all personnel know, understand and agree about all the criticality rules involved. The involved HAZWAT personnel shall generate the movement documentation per 20-C-624, "Receipt, Storage and Inspection of Enriched Restricted Nuclear Material" (Not Yet Issued).

c. Movements are normally made to accomplish a task which is directed by another procedure. Ensure that you know and understand the instructions in the other procedure that are directing the material movements. Drivers, who are involved in operations with containers of hydrogen generating materials, shall ensure that all the prescribed safety measures are in place before participating in those operations (See SOP 20-C-910, "Venting Potentially Explosive Drums"; and SOP 20-C-918, "Preparation For and Movement of Unvented Drums").

d. Some operations require the lifting of a drum or drums without the use of a pallet. This is done using a drum lifting device (barrel grab) (See Figures 3 and 4 for illustrations of typical devices). These devices attach to the forklift forks and lift the drum or drums by attaching to the upper lip of the drum. Ensure that these devices are in safe working condition before placing them in service.

e. When loading trailers for between Plant movements, ensure that the load is properly placed. Ensure that the material is adequately positioned for weight distribution and is stable and secure against shifting during transport. Ensure that the material is spaced to comply with the instructions listed on the "NUCLEAR SAFETY OPERATIONAL AUTHORIZATION" (NSOA) Form No. FS-F-1354, (Figure 6), that was issued for the movement, and with SOPs 20-C-100, 20-C-801, and 20-C-904.

0800

5.0 PROCEDURE (cont.)

5.4.2 Movements of ERNM between Plant areas are directed by the following instructions.

a. Such movements shall be made as directed by supervision. **The movement of ERNM requires an authorization by Nuclear Criticality Safety. Check that a "NUCLEAR SAFETY OPERATIONAL AUTHORIZATION" (NSOA) Form No. FS-F-1354, (Figure 6), has been completed for the directed movement. Do not proceed with a ERNM movement without such authorization.**

b. Inspect the load for proper weight distribution and criticality spacing. **Check that the material is spaced to comply with the instructions listed on the "NUCLEAR SAFETY OPERATIONAL AUTHORIZATION" (NSOA) Form No. FS-F-1354, (Figure 6), that was issued for the movement, and with SOPs 20-C-100 and 20-C-904.**

c. If the load is not stable and/or the criticality spacing is not correct, inform the shipping Supervisor so that the condition is corrected.

d. Perform an item count of the load to check that the load matches the documents, NM TRANSFER RECORD/NM RECEIPT RECORD/MATERIAL IDENTIFICATION RECORD, FS-F-1990, -2220, -2221, (68/69 card), Figure 5.

e. Check that any required radiological surveys of the containe have been performed and documented. **The Supervisor of the shipping Plant shall have any required radiological surveys performed and shall provide the documentation of the performance of the surveys.**

f. Check that the shipping Supervisor and MC&A have signed the 68/69 card packet as the shippers.

g. When the above inspections/checks have been completed with no problems, sign the 68/69 card packet on the Transportation line. **The 68/69 card packet and any other documentation as directed by supervision is to accompany the shipment to its destination.**

5.0 PROCEDURE (cont.)

6989

h. Deliver the materials to the designated delivery point by using the most direct, least congested route. **Travel slowly to maintain the required criticality spacing. The movement of ERNM between Plants requires escort by member of the Nuclear Criticality Safety Section.**

i. Give the 68/69 card packet and any other movement documentation to the MC&A representative of the receiving Plant.

6.0 DEFINITIONS

- HAZWAT - Hazardous Waste Technician.
- Heavy Equipment Operator (HEO) - A classification of personnel trained and qualified to operate certain heavy equipment at the FEMP. Such equipment includes the 42,000 pound forklifts, the "Bobcat" loaders, etc.
- Low Level Radioactive Waste (LLRW) - Waste that contains radioactivity and is not classified as high level waste, spent nuclear fuel, transuranic waste, spent nuclear fuel or 11 e(2) byproduct as defined by DOE Order 5820.2A.
- Enriched Restricted Nuclear Material (ERNM) - Fissionable material that the storage and handling of the material must be controlled to avoid forming a critical mass and therefore preventing a criticality accident.
- Motor Vehicle Operator (MVO) - A classification of personnel trained and qualified to operate certain motor vehicles at the FEMP. Such vehicles include forklifts, handstackers, pickup trucks, etc.
- Nuclear Material (NM) - Depleted, normal, or enriched uranium or thorium as designated by DOE Order 5633.3a.

7.0 APPLICABLE DOCUMENTS

7.1 DRIVERS

- DOE Order 5480.19

8383

7.0 APPLICABLE DOCUMENTS (cont.)

7.2 REFERENCES

- SOP 20-C-100, "Moving and Storing Depleted, Normal, and Enriched Uranium Materials <20% and Thorium Metal and Materials"
- SOP 20-C-904, "General Nuclear Safety Requirements"
- SOP 20-C-910, "Venting Potentially Explosive Drums"
- SOP 20-C-918, "Preparation for and Movement of Unvented Drums"
- SOP 20-C-623, "Receipt and Storage of Low Level Radioactive Waste and Nuclear Material" (Not Yet Issued)
- SOP 20-C-624, "Receipt, Storage and Inspection of Enriched Restricted Nuclear Material" (Not Yet Issued)
- RM-0005, "FEMP Lot Marking and Color Coding System"
- SOP 20-C-801, "Storage of Enriched Material"

6989

FIGURE 1

GAS, LPG OR DIESEL FUELED EQUIPMENT OPERATOR'S CHECKLIST
Form No. FS-F-2414 (Typical Example)
(Sheet 1 of 2)

Fernald Site

GAS, LPG OR DIESEL FUELED EQUIPMENT OPERATOR'S CHECKLIST

SEE REVERSE SIDE FOR INSTRUCTIONS

Shift _____ Date: _____

EQUIPMENT NUMBER:	OPERATOR'S NAME:	PLANT LOCATION:	SUPERVISOR'S SIGNATURE:

HOUR METER/SPEEDOMETER READING — _____ HOURS/MILES

Check (✓) boxes accordingly ☐ OK ☐ Needs attention or repair

VISUAL CHECKS:			OPERATIONAL CHECKS:		
		Engine oil level			Horn
		Radiator water level when cold			Steering
		Fuel level			Service brakes
		Obvious damage and leaks			Parking brake
		Tire condition			Hydraulic controls
		Head and tail lights			Directional signals
		Warning lights			Backup alarm
		Hour meter/speedometer			
		Other gauges and instruments			
		Current maintenance sticker			

Due for PMP based on ☐ Hrs./Miles ☐ Date

Comments: (Explain all items needing attention or repair.) _____

FS-F-2414 (REV. 11/5/91)

000781

FIGURE 1

GAS, LPG OR DIESEL FUELED EQUIPMENT OPERATOR'S CHECKLIST
Form No. FS-F-2414 (Typical Example)
(Sheet 2 of 2)

INSTRUCTIONS FOR COMPLETING CHECKLIST:

Note: Check those items applicable to the equipment which you are about to operate.

1. **Engine Crankcase Oil Level** — Engine oil level should be up to the "Full" mark on the dipstick. Never overfill.
2. **Radiator Water Level** — On vertical flow radiators, coolant should be one inch from top of tank. In cross flow radiators, coolant should not be above water level tab. Always turn engine off when checking coolant level in cross flow radiators. **Caution** — Never add water to an overheated engine until the engine has cooled.
3. **Fuel Level** — Fill if necessary. Make sure filler cap is in place and undamaged.
   Note: The previous visual checks apply only to gasoline or LP-gas-powered trucks, of course. Most of the following checks, however, will apply to both gas and electric trucks.
4. **Hydraulic Sump Tank Oil Level** — Check the oil level by tilting the upright all the way back and lifting forks to full height. If the upright bounces or the fork carriage refuses to go all the way up, additional oil must be added.
5. **Tires** — Inspect all tires for cuts, breaks and signs of uneven wear. Remove all material imbedded in treads. Wipe off oil, grease or gasoline. Check inflation pressure on pneumatic tires.
6. **Battery Connector** — Make sure that battery to truck connections are tight.
7. **Head and Tail Lights** — Make sure all lights are working properly.
8. **Warning Lights** — Start engine and make sure all dashboard warning lights are working properly. Make it a habit to glance at lights and gauges as you work to make sure your vehicle is functioning properly.
9. **Hour Meter** — With engine running, see if hour meter is working.
10. **Other Gauges and Instruments** — You can get accurate readings on engine oil pressure, water temperature, and ammeter charge rate only after the engine is warmed up. These gauges and instruments will not be found on electric trucks.

Now make these operational checks:

11. **Horn, Backup Alarm, and Directional Signals** — Make sure they are working properly.
12. **Steering (especially power steering)** — With engine running, turn steering wheel both ways to stops. Steering shou[illegible] feel "loose" and pump should not squeal **before** you reach stops.
13. **Service Brakes** — Push brake pedal in. It should have free travel before you meet resistance. Depress the brake pedal o[illegible] more and hold for at least 10 seconds. The pedal must be solid, not spongy or drift under pressure.
    Note: For proper freeplay refer to your operators manual.
14. **Parking Brake** — Fully apply the brake to be sure it is functioning properly.
15. **Seat Brake** — Like the parking brake on gas-powered lift trucks, the seat brake found on electric trucks must also be checked to see if it is working properly. Make check while sitting on the seat. As the machine starts to move, rise up from the seat just enough to apply the brakes. At the same time, listen to make sure that power to the drive has been cut off.
16. **Seat Safety Switch** — Check adjustment. Switch must activate when the seat frame bumpers are approximately two to three inches from the hood during the seat downward travel. If switch fails to activate properly, notify your supervisor.
17. **Brake Switch** — The brake switch, which is connected to the service brake linkage, should be checked while sitting on the seat of the lift truck with the key switch on and the directional levers or buttons placed in forward or reverse. Push the brake pedal with the left foot. Circuit should be broken before brakes are applied. This switch operation normally takes place in the first ¾ to 1" brake pedal travel.
18. **Hydraulic Controls** — Lift and tilt cylinders should actuate when the lift or tilt levers are moved either way from neutral position. The lift cylinder should hold the load in elevated position without noticeable downward drift. The tilt cylinder should not allow the load to drift forward or backward.
19. **Obvious Damage and Leaks** — Truck should be checked over completely for any damage or leaks. Any found should be so noted on the Operator's Daily Checklist.

Use your eyes, ears, and nose all the time you are operating your equipment. Listen for excessive or unusual noises. Watch for rough running, stalling, or smoking of the engine. Always stop the equipment immediately, and report anything that isn't functioning properly.

Don't try to repair your equipment yourself. Repairs attempted without proper tools may result in much greater damage, putting the equipment out of action and resulting in lost time and a big repair bill.

SPECIAL NOTE: Vehicles used only on-site for passenger carrying purposes (automobiles, pickup trucks, vans, etc.) are to be checked each week on Mondays. Vehicles used for other purposes and all industrial vehicular type equipment shall be checked at the start of each shift of scheduled use.

Upon completion send checklist to Transportation Office. In the event a defect is detected during o[illegible] prepare another checklist denoting the problem. Check with your supervisor to see if the unit s[illegible] continued in operation or whether the Garage Supervisor (extension 6478) should be contacted for re[illegible] replacement.

6989

FIGURE 2

NOTICE TO OPERATOR
Form No. FS-F-1413 (Typical Example)

Fernald Site
TRANSPORTATION SECTION

NOTICE TO OPERATOR

Unit Number: _____

Please notify your Foreman when:

METER READS:	OR THIS DATE IS REACHED:
_____ Hours	
_____ Miles	

SAFETY SLOGAN:

FS-F-1413

FIGURE 3

DRUM LIFTING DEVICE - ONE DRUM
(Typical Example)

LIFTING/HANDLING FIXTURE

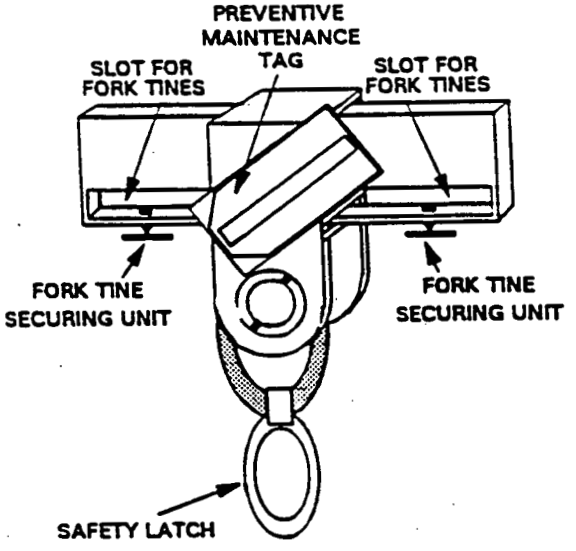

LIFTING/HANDLING SETUP FOR FORKTRUCK/HANDSTACKER

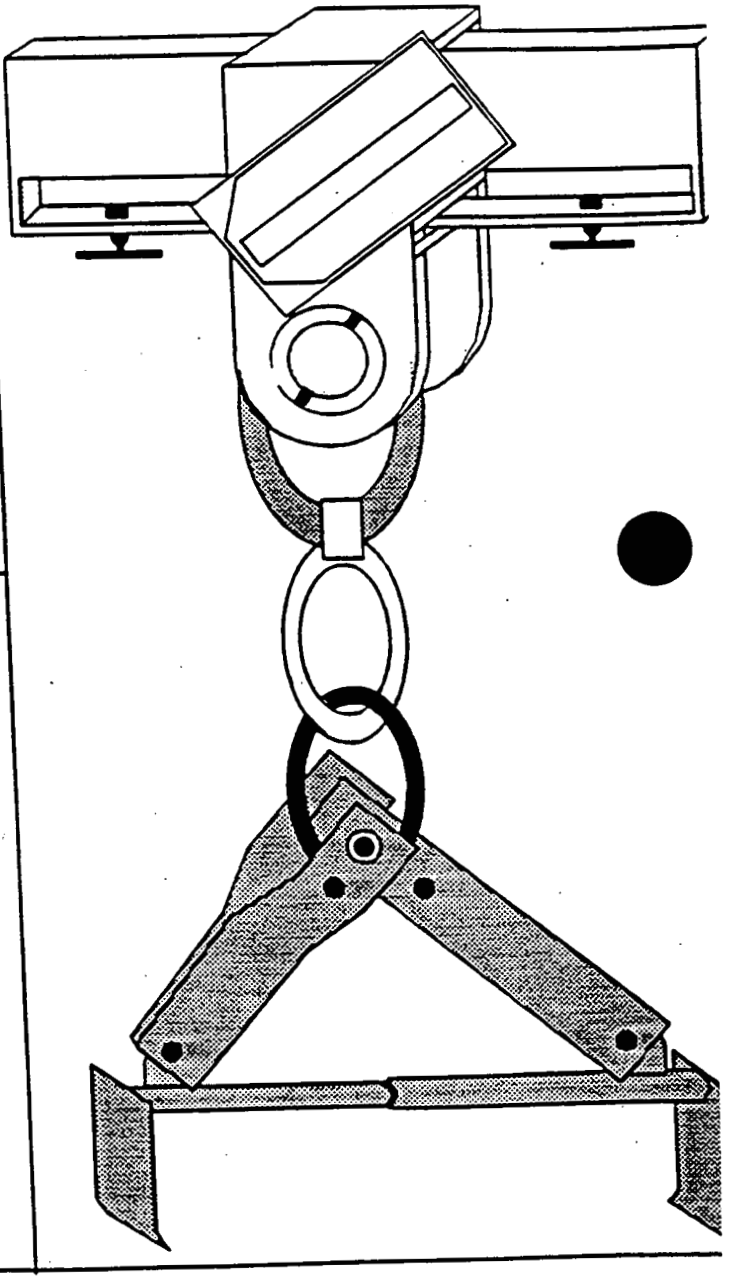

DRUM LIFTING DEVICE

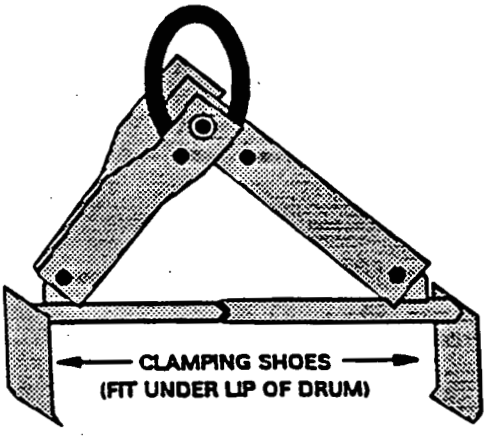

FIGURE 4

DRUM LIFTING DEVICE - TWO DRUM
(Typical Example)

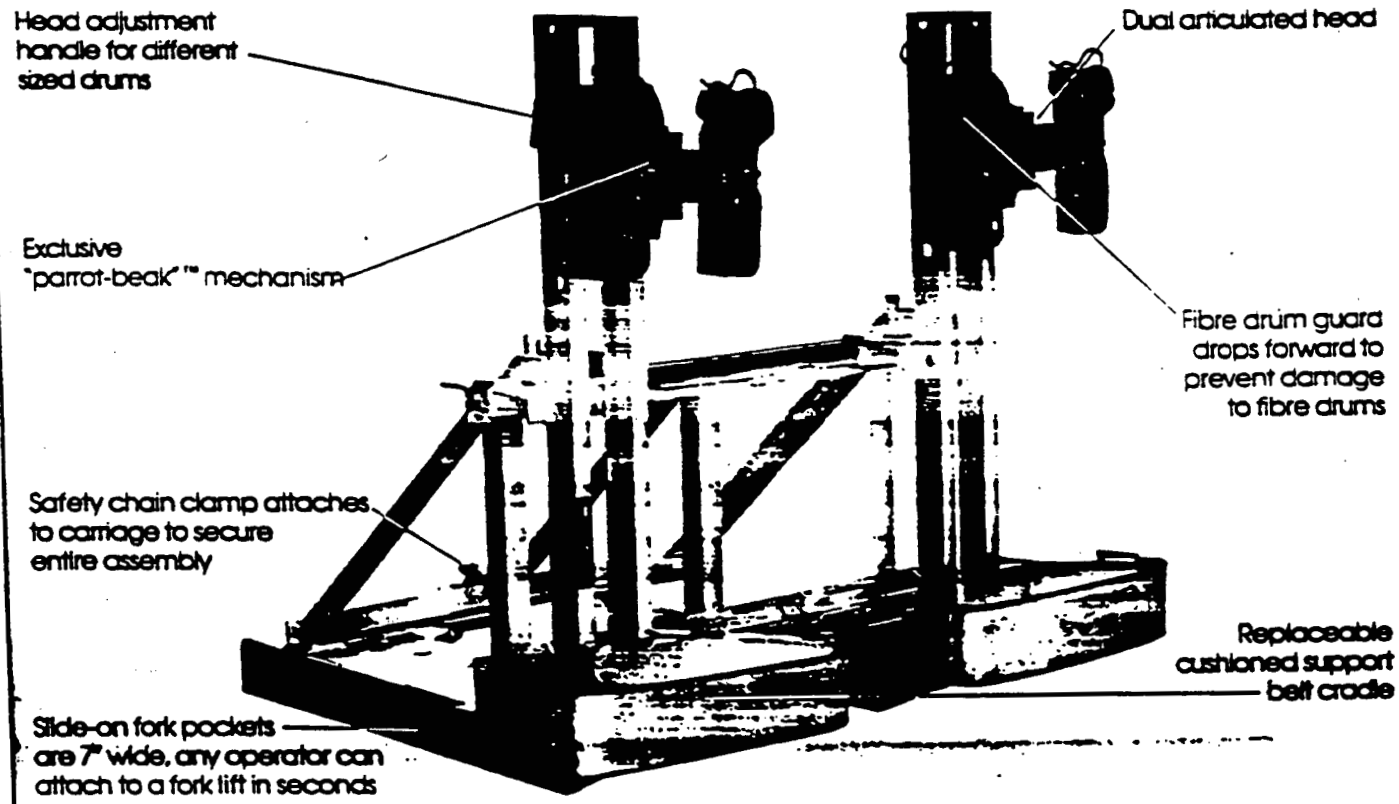

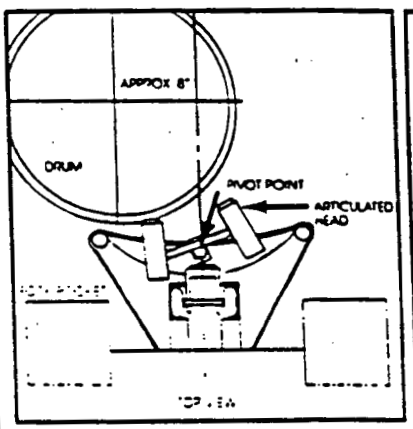

Picking Tightly Spaced Drums

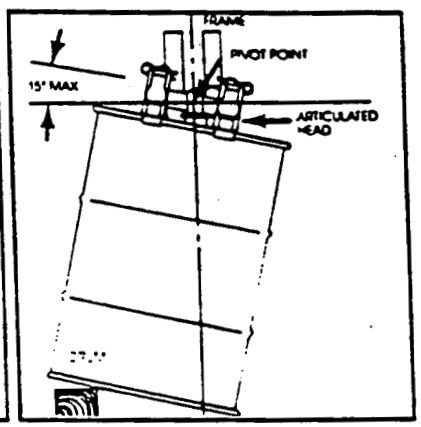

Picking Misaligned Drums

Specifications (2-DCMJ-SOM)

Capacity:	4,000 lbs.
Height:	37⅜"
Width:	37" to 43"
Length:	33⅝"
Load Center:	44"
Weight:	265 lbs.

0808

FIGURE 5

NM TRANSFER RECORD/NM RECEIPT RECORD/MATERIAL IDENTIFICATION RECORD

Form No.s FS-F-1990, -2220, -2221
(68/69 Card) (Typical Example)

NUCLEAR MATERIAL TRANSFER RECORD

CARD PL.	CARD NO.
	68

NEGATIVE	DATE TRANSFERRED MO.	DAY	YEAR	SHIFT	TRANS. BY BADGE NO.

NOTE: Green card is for receiver information ONLY and may be retained in file. DO NOT FORWARD to Data Processing. DO NOT LEAVE with the material.

P.O. NO.:	SOURCE:	MBA: (FROM)	PLANT:	NO. OF CONTAINERS OR ITEMS: NUMBER / DESCRIPTION
MATERIAL CLASS:	MATERIAL TYPE:	MBA: (TO)	PLANT:	GROSS WEIGHT:
LOT SEQUENCE NO.:		STORAGE LOCATION:		TARE WEIGHT:
SHAPE CODE:				

SIGNATURES: (SHIPPER) (TRANSPORTATION) (RECEIVER)

FS-F-1990 (REV. 3/9/92)

NUCLEAR MATERIAL RECEIPT RECORD

CARD PL.	CARD NO.
	69

NOTE: Green card is for receiver information ONLY and may be retained in file. DO NOT FORWARD to Data Processing. DO NOT LEAVE with the material.

NEGATIVE	DATE TRANSFERRED MO.	DAY	YEAR	SHIFT	TRANS. BY BADGE NO.

P.O. NO.:	SOURCE:	MBA: (FROM)	PLANT:	NO. OF CONTAINERS OR ITEMS: NUMBER / DESCRIPTION
MATERIAL CLASS:	MATERIAL TYPE:	MBA: (TO)	PLANT:	GROSS WEIGHT:
LOT SEQUENCE NO.:		STORAGE LOCATION:		TARE WEIGHT:
MATERIAL DESCRIPTION				
SHAPE CODE:				

SIGNATURES: (SHIPPER) (TRANSPORTATION) (RECEIVER)

FS-F-2220 (REV. 3/9/92)

MATERIAL IDENTIFICATION RECORD

CARD PL.	CARD NO.
	XX

NOTE: Green card is for receiver information ONLY and may be retained in file. DO NOT FORWARD to Data Processing. DO NOT LEAVE with the material.

NEGATIVE	DATE TRANSFERRED MO.	DAY	YEAR	SHIFT	TRANS. BY BADGE NO.

P.O. NO.:	SOURCE:	MBA: (FROM)	PLANT:	NO. OF CONTAINERS OR ITEMS: NUMBER / DESCRIPTION
MATERIAL CLASS:	MATERIAL TYPE:	MBA: (TO)	PLANT:	GROSS WEIGHT:
LOT SEQUENCE NO.:		STORAGE LOCATION:		TARE WEIGHT:
MATERIAL DESCRIPTION				
SHAPE CODE:				

SIGNATURES: (SHIPPER) (TRANSPORTATION) (RECEIVER)

FS-F-2221 (REV. 3/9/92)

6989

FIGURE 6

NUCLEAR SAFETY OPERATIONAL AUTHORIZATION (NSOA)
Form No. FS-F-1354 (Typical Example)

TO BE COMPLETED BY NUCLEAR CRITICALITY SAFETY	
Number	
Expiration Date	

NUCLEAR SAFETY OPERATIONAL AUTHORIZATION

Location _____ Date _____

Operation _____ Date Needed _____

PROBLEM:

BASIC CONDITIONS:

RECOMMENDED SOLUTION:

FINAL AUTHORIZATION:

It is further agreed that this temporary filed approval will be void if any change in the equipment or operation with which it is concerned is made. Its provisions will be reviewed for incorporation in an operating procedure.

For Operations:

_____
(INITIATOR)

Approved:

_____
(MANAGER OF INITIATOR)

For Nuclear Criticality Safety:

_____
(NUCLEAR CRITICALITY SAFETY REPRESENTATIVE

Approved:

_____
(NUCLEAR CRITICALITY SAFETY MANAGER)

DISTRIBUTION OF COPIES			
1.	Nuclear Criticality Safety (RECORD COPY)	5-6	Area Supervisory
2.	Initiator	7	Materials Control and Accountability
3.	Mgr., Regulatory and Tech. Prog.	8.	Manager, Radiological Safety
4.	Manager, RSO	9.	Quality Assurance

DO NOT WRITE IN THIS SPACE
Disposition: _____

FS-F-1354 (REV. 01/06/95)

000787

CONTENTS

NON-CONTROLLED COPY

Section **Page**

1.0 PURPOSE 2

2.0 SCOPE 2

3.0 RESPONSIBILITIES 2
- 3.1 Supervisors 2
- 3.2 Operators 2
- 3.3 Waste Operations Support 3

4.0 SAFETY REQUIREMENTS 3

5.0 PROCEDURE 4
- 5.1 Inspecting Loading/Unloading Areas 5
- 5.2 Staging Area Inspection 5
- 5.3 Record Distribution 5

6.0 DEFINITIONS 6

7.0 APPLICABLE DOCUMENTS 6
- 7.1 References 6

FORMS

Forms

1 RCRA Waste Load/Unload Area Inspection Log 7

2 Trailer Staging Area Pre- and Post Load/Unload of (RCRA Material) Inspection Checklist 8

1.0 PURPOSE

The purpose of this document is to establish the procedure for inspecting areas used for loading/unloading and staging containers of RCRA material.

2.0 SCOPE

This procedure is applicable to any area, with the exception of Satellite Accumulation Areas, where RCRA material is loaded/unloaded or staged (including warehouses, plant pads, and trailer staging areas) for shipping, receiving, or interplant transfer of RCRA containers (drum or white metal boxes).

3.0 RESPONSIBILITIES

3.1 **Supervisors** shall be responsible for the following:

- Notifying support organizations when assistance is required during inspection.
- Ensuring that personnel are qualified per the established training requirements identified by the Division Manager.
- Specifying segregation of containers if incompatible wastes are positioned together prior to shipment or storage.
- Notify the AEDO and complete the report following SSOP-1018 and ED-0001 if a spill occurs.
- Contacting Industrial Hygiene or Radiological Control to determine the appropriate respiratory protection and/or personal protective equipment for the task being performed.
- Issuing the required respiratory protection and/or personal protective equipment to personnel according to applicable permits.
- Obtaining and posting any or all work permits that will be required for the task.
- Reviewing applicable Material Safety Data Sheets (MSDSs) and Material Evaluation Forms (MEFs) with personnel.

3.2 **Personnel** shall be responsible for complying with this Standard Operating Procedure (SOP).

6989

3.0 RESPONSIBILITIES (cont.)

3.3 **Waste Operations Support** shall be responsible for the following:

- Assisting the responsible Supervisor while inspecting loading/unloading and/or staging areas.
- Providing the inspecting Supervisor with the layout of dock area.

4.0 SAFETY REQUIREMENTS

4.1 Safety glasses shall be worn unless other eye protection is required by Industrial Hygiene (IH) or Radiological Control (i.e. goggles or full-faced respirators).

4.2 Chemical cover goggles or face shield, rubber apron, and neoprene rubber gloves shall be worn when handling caustic, acids, or a chemical that could cause skin damage.

4.3 Respiratory protection and Personal Protective Equipment (PPE) issued by the Supervisor shall be worn when required by IH or Radiological Control.

4.4 Leather-palm gloves shall be worn while handling drums or operating equipment and when handling rough, sharp-edges.

4.5 In case of contact with acid or caustic, contaminated clothing shall be removed and the affected body area flushed with water in an eye bubbler/safety shower. Injured personnel shall report to Medical Services.

4.6 A release of hazardous waste shall be reported per SOP 20-C-606.

4.7 Employees shall have reviewed, and be familiar with, MSDSs or MEFs for chemical/hazardous materials that may be used or encountered.

0808

4.0 SAFETY REQUIREMENTS (cont.)

4.8 Any circumstance which could have resulted in an intake of radioactive materials by inhalation, ingestion, or absorption shall immediately be reported to a Supervisor. The Supervisor shall immediately report the circumstance of possible radioactive materials intake to ES&H Radiological Control Department for evaluation. When the suspect isotope is uranium, the involved personnel shall report to the Urine Sampling Station at the end of their shift to complete an Incident Investigation Report (IIR) (Form No. FS-F-1458), and submit an incident urine sample. The involved personnel shall also report to the Urine Sampling Station at the start of their next shift to submit a follow-up urine sample. When the suspect isotope is other than uranium, the involved personnel shall report to the Dosimetry Section of the Radiological Control Department for further determination of actions. Employees are responsible for complying with additional requirements as specified by the Radiological Control Section.

4.9 Any situation which could have resulted in the inhalation, ingestion, or absorption of a hazardous material shall immediately be reported to a Supervisor or to the Assistant Emergency Duty Officer (AEDO), who will immediately report the circumstances to Medical and Industrial Hygiene. The involved personnel shall be directed by the Supervisor or AEDO as to when and where to report for medical evaluation, completion of an Incident Investigation Report (IIR)(Form No. FS-F-1458), and submitting bioassay samples (e.g., blood, urine, etc.). Employees are responsible for complying with any additional requirements as specified by ES&H.

4.10 Plumbed eyewashes shall be flushed weekly. Portable eyewashes shall have the pressure checked weekly and fluids changed every 6 months. All eyewashes shall be located within 100 ft. of the work area.

5.0 PROCEDURE

- Inspection of RCRA material loading, unloading and staging ares is required per 40 CFR section 265.15.

5.0 PROCEDURE (cont.)

6989

5.1 Inspecting Loading/Unloading Areas

- Inspect loading/unloading and staging areas and the containers in these areas at the start of the shift when loading/unloading is scheduled per the "RCRA Waste Loading/Unloading Area Inspection Log," Form No. FMPC-OPR-3268 (See Form 1).

  - Emergency and spill response equipment shall be accessible, intact, and have a current inspection or charge tag.

  - Containers of RCRA material and recovery drums with rust/corrosion, dents, holes, bulges or with any other condition that could have an adverse affect on container integrity are unacceptable. (In the case of a spill refer to SOP 20-C-606 and for leaking container overpack per SOP 20-C-600).

  - Floors and curbs shall be free of debris and intact (no cracks, breaks, holes).

  - Not Applicable (N/A) shall be entered in the Comments section with an explanation when an item does not apply.

5.2 Staging Area Inspection

- Inspect trailer staging areas per the "Trailer Staging Area Pre- and Post Load/Unload of (RCRA Material) Inspection Checklist," Form No. FS-F-3305 (See Form 2).

NOTE: Only one inspection per day is required, before or after loading/unloading RCRA material.

5.3 Record Distribution

- Turn the completed inspection forms over to the Supervisor.

  - The Supervisor shall obtain "Work Requests" (if applicable) to correct unacceptable conditions listed on the form. The work order number must be listed on every inspection form until the date that it has been corrected.

  - Completed inspection forms shall be distributed to the RCRA Operating Records as required and maintained in a file for three years from the date of the inspection.

0300

6.0 DEFINITIONS

6.1 Hazardous Waste - A discarded material which is listed in the Environmental Protection Agency Hazardous Waste List, fails the TCLP test, or exhibits any of the following three characteristics; ignitability, corrosivity, or reactivity. Both "listed" and "characteristics" wastes are regulated under RCRA.

6.2 Resource Conservation and Recovery Act (RCRA) - The Congressional Act which established safe and environmentally acceptable management practices for specific wastes. RCRA requires strict "cradle to grave" control and proper management of hazardous waste.

6.3 Loading/Unloading Areas - Permanent areas where RCRA material is placed on, removed from, vehicles.

6.4 Staging Areas - Temporary area established to load/unload trailers of RCRA material.

7.0 APPLICABLE DOCUMENTS

7.1 **Drivers**

7.1.1 PO-D-026, "Site Services Document Program"

7.1.2 RM-0012, "Quality Assurance Program Description"

7.2 **References**

7.2.1 SOP 20-C-606, "Hazardous Material Spill Clean-Up"

7.2.2 SOP 20-C-600, "Overpacking Defective Containers"

6989

FEMP
RCRA WASTE LOADING/UNLOADING AREA INSPECTION LOG

Area: _____ Inspected By: _____ Badge No. _____

Date: _____ Supervisor: _____ Badge No. _____

ITEM	DESCRIPTION	ACCEPTABLE		DESCRIPTION OF[1] UNACCEPTABLE CONDITION	COMMENTS
		YES	NO		
1	Fire Extinguisher				
2	EXIT sign				
3	DANGER - NO SMOKING OPEN FLAME OR MATCHES sign				
4	DANGER-AUTHORIZED PERSONNEL ONLY sign				
5	Recovery drums				
6	Absorbent pads				
7	Spill material PIGs				
8	Leather-palm gloves				
9	Rubber gloves				
10	Rubber boots				
11	Disposable coveralls				
12	Respirators and cartridges				
13	Shovels				
14	Brooms				
15	Spill kit accessible				
16	Emergency call number posted				
17	Curb intact				
18	Floor/liner sealed/intacted				
19	Free liquid on floor/liner				
20	Condition of containers[2]				

(1) If a Work Request was issued for correction, list the Request Number, Item Number, and date corrected: _____

(2) Indicate corrosion (I, II, III) or leaker type (I, II, or III) in the description column.

	DISTRIBUTION OF COPIES	
1	ORIGINAL	WASTE MANAGEMENT CONTROL FILES
2	COPY	FACILITY OWNER
3	COPY	RCRA OPERATING RECORDS

FORM 1

0 8 8 0

FEMP
TRAILER STAGING AREA PRE- AND POST-LOAD/UNLOAD OF (RCRA MATERI
INSPECTION CHECKSHEET

DATE:	AREA:	INSPECTED BY:

PRE-LOAD/UNLOAD INSPECTION

INSPECT FOR	ACCEPTABLE		DESCRIPTION	WORK REQUEST REQUIRED		WORK REQUEST NUMBER	DATE COMPLETED
	YES	NO		YES	NO		
Spill cleanup equipment accessible (1)							
Evidence of spill (2)							
Container condition (3)							

POST-LOAD/UNLOAD INSPECTION

INSPECT FOR	ACCEPTABLE		DESCRIPTION	WORK REQUEST REQUIRED		WORK REQUEST NUMBER	DATE COMPLETED
	YES	NO		YES	NO		
Signs of leakage							
Container condition (4)							
Material stored in accordance with applicable SOPs							

(1) Do not load or unload unless all spill equipment is accessible.

(2) Do not unload containers until spill material has been removed and permission granted to unload.

(3) Do not load/unload damaged containers.

(4) Do not move damaged containers into storage.

REMARKS: _____

INSPECTOR SIGNATURE:	BADGE NO.:	DATE/TIME:
SUPERVISOR SIGNATURE:	BADGE NO.:	DATE/TIME:

NO.	DISTRIBUTION OF COPIES	
1	ORIGINAL	WASTE MANAGEMENT CONTROL FILES
2	COPY	FACILITY OWNER
3	COPY	RCRA OPERATING RECORDS

FORM 2

6989

RECORD OF ISSUE/REVISIONS

DATE	REV. NO.	DESCRIPTION AND AUTHORITY
04-14-92	0	Procedure required for inspecting RCRA Loading/Unloading and Trailer Staging Areas per request P90-357, initiated by J. W. Ogg.
08-09-93	1	Revised to incorporate CIO C93-126 per Request P93-767 and update to conform with Procedure Program requirements.
09-07-94	0	Reissue of document to update to current requirements per Request No. P94-0398, initiated by J. Baarlaer. The document format does not conform to current RSO SOP format per PO-D-026, format changed at the request of 20-C-500 document owner.

REMEDIATION SUPPORT OPERATIONS PROCEDURE	**Emptying Liquid Hazardous Waste Storage Containers**	**SOP 20-C-613** **Area: As Applicable**
(Signature on File) Authorization: H. Bailey, Materials Management Manager	Supersedes: 20-C-613 Dated: 03-09-90	Issue Date: 08-05-93

NON-CONTROLLED COI

1.0 PURPOSE

The purpose of this document is to provide the procedure for transferring liquid hazardous waste from a storage container into a receiving container.

2.0 APPLICABILITY

This procedure is applicable to damaged drums/containers, in a Satellite Accumulation Area or RCRA Storage Facility, holding liquid hazardous waste (excluding wastes designated as acutely hazardous) designated for transfer into a receiving container.

3.0 RESPONSIBILITIES

3.1 **Supervisors** shall be responsible for the following:

3.1.1 Coordinating with support organizations when assistance is required.

3.1.2 Coordinating personnel emptying and redrumming hazardous waste containers.

3.1.3 Ensuring that personnel are qualified per the established training requirements identified by the Division Manager.

3.1.4 Providing drums to receive the stored waste.

3.1.5 Ensuring that receiving drums are labelled in accordance with SOP 20-C-630.

3.1.6 Upon notification of a spill or abnormal event, immediately reporting the event to the AEDO and ensuring a Minor Event Report (MER) is submitted.

3.1.7 Contacting Industrial Hygiene or Radiological Safety to determine the appropriate respiratory protection for the process being performed.

3.1.8 Issuing the required respiratory protection to operators.

3.1.9 Obtaining and posting permits that may be required.

3.1.10 Reviewing applicable Material Safety Data Sheets (MSDS) with operators.

3.2 **Operators** shall be responsible for complying with this procedure.

4.0 DEFINITIONS

4.1 Acutely Hazardous - A waste known to be fatal to humans in low doses or capable of causing or significantly contributing to an increase in serious irreversible, or incapacitating reversible, illness.

4.2 Compatible Container - A can, drum, or box, that is approved for the waste to be accumulated.

4.3 Hazardous Waste - A discarded material, regulated under RCRA, which is listed on the Environmental Protection Agency Hazardous Waste List or exhibits characteristics of ignitability, corrosivity, reactivity, or Extraction Procedure (EP) toxicity.

4.4 Receiving Drum - An empty drum, or drum containing waste or residue of the same type as intended to receive.

4.5 Resource Conservation and Recovery Act (RCRA) - The Congressional Act which establishes safe "cradle to grave" and environmentally acceptable management practices for specific hazardous wastes.

4.6 Satellite Accumulation Area (SAA) - A designated area for temporary waste storage at or near the waste generation point.

4.7 Storage Drum - A damaged container of RCRA waste which requires emptying into a receiving drum.

5.0 APPLICABLE DOCUMENTS

5.1 Drivers

5.1.1 PO-D-026, "Site Services Document Program"

5.1.2 "FEMP Conduct of Operations Manual"

5.1.3 RM-0012, "Quality Assurance Program Description"

5.2 References

5.2.1 SOP 1-C-305, "Baling Scrap Metal Drums"

5.2.2 SOP 20-C-601, "Packaging Low Level Radioactive Waste (L-LRW) for Offsite Disposal"

5.2.3 SOP 20-C-630, "Receipt Inspection, Storage, and Storage Inspection of Hazardous Waste"

5.2.4 SOP 20-C-606, "Hazardous Material Spill Cleanup"

5.2.5 SOP 20-C-902, "Liquid Propane Gas Powered Handstackers and Tuggers"

5.2.6 SOP 20-C-912, "Checking Scale Operation"

6989

6.0 INDUSTRIAL HEALTH AND SAFETY REQUIREMENTS

6.1 A defined safety system is not involved.

6.2 Safety glasses shall be worn unless otherwise specified by the supervisor, ES&H, or posted signs.

6.3 Respiratory protection issued by the supervisor shall be worn when required.

6.4 Face shields shall be worn when removing lids or bungs from containers with liquids by ES&H.

6.5 Goggles or face shields shall be worn when a possibility exists of personnel being splashed with liquids.

6.6 A rubber apron shall be worn if there is a possibility of being splashed with caustic, acids, or any other chemical which could cause immediate skin damage upon contact.

6.7 HEPA type filter vacuum cleaners when a current DOP test label or a vacuum system approved by ES&H shall be used for cleanup.

6.8 Leather-palm gloves shall be worn when handling drums, operating equipment, and when handling rough, sharp-edged, or contaminated materials.

6.9 Neoprene rubber gloves shall be worn when handling hazardous chemical waste where skin contact is possible.

6.10 Any release of hazardous waste shall be handled per SOP 20-C-606.

6.11 Personnel safety equipment (eyewash, fire extinguishers, safety showers) shall be operational and readily available for emergencies.

6.12 Operators shall have reviewed and be familiar with MSDSs for hazardous material/chemicals that may be used or encountered.

6.13 Any circumstance which could have resulted in an intake of radioactive materials by inhalation, ingestion, or absorption shall immediately be reported to a Supervisor. The Supervisor shall immediately report the circumstance of possible radioactive materials intake to ES&H Radiological Control Department for evaluation. When the suspect isotope is uranium, the involved personnel shall report to the Urine Sampling Station at the end of their shift to complete an Incident Investigation Report (IIR) (Form No. FMPC-IRS&T-1458), and submit an incident urine sample. The involved personnel shall also report to the Urine Sampling Station at the start of their next shift to submit a follow up urine sample. When the suspect isotope is other than uranium, the involved personnel shall report to the Dosimetry Section of the Radiological Control Department for further determination of actions. Employees are responsible for complying with additional requirements as specified by the Radiological Control Section.

6.0 **INDUSTRIAL HEALTH AND SAFETY REQUIREMENTS** (cont.)

6.14 Any situation which could have resulted in the inhalation, ingestion, or absorption of a hazardous material shall immediately be reported to a Supervisor or to the Assistant Emergency Duty Officer (AEDO), who will immediately report the circumstances to Medical and Industrial Hygiene. The involved personnel shall be directed by the Supervisor or AEDO as to when and where to report for medical evaluation, completion of an Incident Investigation Report (IIR) (Form No. FMPC-IRS&T-1458), and submitting bioassay samples (e.g. blood, urine). Employees are responsible for complying with any additional requirements as specified by ES&H.

7.0 **GENERAL**

7.1 Warnings, Cautions, and Notes precede the Step or Item to which they apply

7.2 Supervision shall be notified if a damaged acutely hazardous waste storage container is received.

NOTE: This procedure excludes the handling of acutely hazardous waste containers.

8.0 **PROCEDURE**

8.1 Emptying Storage Drums

8.1.1 Check the scale to be used per SOP 20-C-912.

8.1.2 Tare weigh the receiving drum.

8.1.3 Record the weight on an "Item Production/Certification/Identification" card, Form FS-F-1945-XX (See Figure 1).

8.1.4 Using PVC pipe and HERCULITE (or similar), construct a secondary containment area.

8.1.5 Place the receiving drum in the diked area.

8.1.6 Remove the lid/bung from the drum.

8.1.7 Place the damaged storage drum within diked area, near the receiving drum.

NOTE: The supervisor shall arrange for an Industrial Hygiene (IH) Technician to monitor the area for fumes when the lid/bung is removed.

8.1.8 When the drums are positioned, notify the supervisor.

8.1.9 Check the lids on the drums.

8.1.9.1 Replace open head lids with bung-type lids.

6989

8.0 **PROCEDURE** (cont.)

8.1.10 Remove the bung plug from the storage container lid.

8.1.11 Remove the bung plug from the receiving container lid.

NOTE: The pump shall be identified with the EPA hazardous waste number for the material to be transferred.

8.1.12 Check that the portable pump to be used is labelled with the hazardous waste number for the material in the storage container.

8.1.12.1 If not, obtain a pump that has a compatible number affixed.

8.1.12.2 If no compatible pump is available, notify the supervisor.

8.1.12.3 Clean the pump as directed by the supervisor.

8.1.13 Place the portable pump inlet hose into the storage drum.

8.1.14 Place the outlet hose into the receiving drum.

8.1.15 Connect a grounding cable between an electrical ground and a drum.

8.1.16 Repeat 8.1.16 to ground the second drum.

8.1.17 Using the portable pump, empty the storage drum.

8.1.18 Check the receiving drum while material is being transferred.

NOTE: Bulging drums shall be handled under direct supervision of the Area Supervisor and IRS&T Department.

8.1.18.1 If a drum starts to bulge, shut off the pump.

8.1.18.2 Notify the supervisor.

8.1.19 When the flow of material to the receiving drum has decreased to a trickle, shut off the pump.

8.1.20 Remove the pump and hose slowly so that liquid will drain into the container.

8.1.21 Store the pump on an absorbent pad in the secondary containment area of a RCRA Warehouse.

8.1.22 Place a funnel in receiving drum bung.

NOTE: A drum rotator may be used to invert drum as determined by supervisor.

8.1.23 Invert the storage drum over the receiving drum with the storage drum bung in the funnel.

8.0 **PROCEDURE** (cont.)

NOTE: Storage drums which contain sludge or accumulated solids may need to be inverted for longer than five minutes or tapped from the outside with a rubber mallet.

8.1.24 After five minutes in the inverted position, turn the storage drum upright.

8.1.25 Lower the drum to the floor.

8.1.26 After five minutes in the upright position estimate the amount of residue remaining in the bottom of the drum.

8.1.27 Record the estimated amount on Form FMPC-REST-3192 (See Figure 2).

8.1.28 Weigh the empty storage drum.

8.1.29 Record the storage drum weight on Forms FS-F-1945-XX and FMPC-REST-3192.

8.1.30 Complete Form FMPC-REST-3192.

8.1.31 Give the completed form to the supervisor.

8.1.32 Install a bung plug in the storage drum.

NOTE: The supervisor shall have the drum transferred to a RCRA storage facility.

8.1.33 Notify the supervisor that the empty drum is ready for storage or disposal per SOP 1-C-305.

8.1.34 Install the bung plug in the receiving drum per SOP 20-C-601.

CAUTION

Receiving drums shall be marked with the same identification as the damage storage drum.

8.1.35 Label the receiving drum per SOP 20-C-630.

8.1.36 Complete required forms for the receiving drum per SOP 20-C-630.

8.1.37 Weigh the filled receiving drum.

8.1.38 Enter the weight on the Form FS-F-1945-XX.

8.1.39 Complete the Form FS-F-1945-XX.

8.1.40 Submit the completed form to the MC&A representative.

6989

8.0 **PROCEDURE** (cont.)

NOTE 1: Supervisor shall request Transportation to transport the drum to the RCRA storage area per SOP 20-C-630.

NOTE 2: The supervisor shall notify Waste Storage that the empty drum requires inspection.

NOTE 3: Waste Storage shall verify that the drum is empty and fill out the applicable portion of FMPC-REST-3192.

8.1.41 Notify the supervisor that the receiving drum is ready for storage and the damaged drum is ready for processing.

8.1.42 When Waste Storage has verified the drum is empty and returned Form FMPC-REST-3192, notify the supervisor that the drum is ready for crushing.

9.0 **APPLICABLE FORMS**

9.1 Figure 1 - FS-F-1945-XX, "Item Production/Certification/Identification"

9.2 Figure 2 - FMPC-REST-3192, "Empty Drum Status and Disposal Evaluation"

CARD XX **ITEM PRODUCTION/CERTIFICATION/IDENTIFICATION**

P. O. NO.	SOURCE	CLASS	MATERIAL TYPE	LOT SEQUENCE NO.	DATE MO	DAY	YEAR	SHIFT	BADGE NO.	PACKAGE NO.

SEAL NUMBER	SEAL DATE MONTH	DAY	YEAR

WASTE DESCRIPTION AND COMMENTS

PACKAGE TYPE

PACKAGE SIZE

PACKAGE PHYSICAL CERTIFICATION	YES	NO
EMPTY CONTAINER AT START		
RUST HOLES OR DENTS		
MATERIAL IS AS CODED		
PROHIBITED MATERIALS		
LIQUIDS IN CONTAINER		
MINIMUM OF VOID SPACE		
PACKAGE SECURED		
DRAIN PLUG SECURED		

PLANT	PROD. MBA
PLANT TO	MBA TO

GROSS WEIGHT

TARE WEIGHT

NET WEIGHT

GENERATOR SIGNATURE

SUPERVISOR SIGNATURE DATE

FS-F-1945-XX (REV. 3/19/92)

CARD 65 **ITEM PRODUCTION/CERTIFICATION/IDENTIFICATION**

P. O. NO.	SOURCE	CLASS	MATERIAL TYPE	LOT SEQUENCE NO.	DATE MO	DAY	YEAR	SHIFT	BADGE NO.	PACKAGE NO.

SEAL NUMBER	SEAL DATE MONTH	DAY	YEAR

WASTE DESCRIPTION AND COMMENTS

PACKAGE TYPE

PACKAGE SIZE

PACKAGE PHYSICAL CERTIFICATION	YES	NO
EMPTY CONTAINER AT START		
RUST HOLES OR DENTS		
MATERIAL IS AS CODED		
PROHIBITED MATERIALS		
LIQUIDS IN CONTAINER		
MINIMUM OF VOID SPACE		
PACKAGE SECURED		
DRAIN PLUG SECURED		

PLANT	PROD. MBA
PLANT TO	MBA TO

GROSS WEIGHT

TARE WEIGHT

NET WEIGHT

GENERATOR SIGNATURE

SUPERVISOR SIGNATURE DATE

FS-F-1945-65 (REV. 3/19/92)

CARD 66 **ITEM PRODUCTION/CERTIFICATION/IDENTIFICATION**

P. O. NO.	SOURCE	CLASS	MATERIAL TYPE	LOT SEQUENCE NO.	DATE MO	DAY	YEAR	SHIFT	BADGE NO.	PACKAGE NO.

SEAL NUMBER	SEAL DATE MONTH	DAY	YEAR

WASTE DESCRIPTION AND COMMENTS

PACKAGE TYPE

PACKAGE SIZE

PACKAGE PHYSICAL CERTIFICATION	YES	NO
EMPTY CONTAINER AT START		
RUST HOLES OR DENTS		
MATERIAL IS AS CODED		
PROHIBITED MATERIALS		
LIQUIDS IN CONTAINER		
MINIMUM OF VOID SPACE		
PACKAGE SECURED		
DRAIN PLUG SECURED		

PLANT	PROD. MBA
PLANT TO	MBA TO

GROSS WEIGHT

TARE WEIGHT

NET WEIGHT

GENERATOR SIGNATURE

SUPERVISOR SIGNATURE DATE

FS-F-1945-66 (REV. 3/19/92)

ITEM PRODUCTION/CERTIFICATION/IDENTIFICATION
FS-F-1945-XX
Figure 1

6989

FMPC
RESTORATION

EMPTY DRUM STATUS AND DISPOSAL EVALUATION

OPERATOR'S NAME:		DATE:
DRUM NO:	INVENTORY NO.:	LOT MARK CODE:
MATERIAL DESCRIPTION		
EPA HAZARD CODE(S):		RESIDUE REMAINING (INCHES):
ORIGINAL DRUM TARE WT. (LBS): $= W_1$	EMPTY DRUM WT. (LBS): $= W_2$	NET WT. BEFORE EMPTYING (LBS): $= W_n$
MC&A SIGNATURE		BADGE NUMBER
OPERATOR'S SIGNATURE		BADGE NUMBER
SUPERVISOR'S SIGNATURE		BADGE NUMBER

THIS SECTION TO BE COMPLETED BY WASTE TECHNOLOGY		YES	NO
Weight of Residue: $W_2 - W_1 = W_r$	Is % Residue ≤3%?		
	Is the estimated Residue Remaining ≤ one inch?		
$(W_r/W_n) \times 100 =$ _____% Residue	Is the drum empty per 40 CFR 216.7?		

WASTE TECHNOLOGY DISPOSAL RECOMMENDATION:

WASTE TECHNOLOGY SIGNATURE	BADGE NUMBER

FMPC-REST-3192 (1/25/90)

EMPTY DRUM STATUS AND DISPOSAL EVALUATION
FMPC-REST-3192
Figure 2

6989

RECORD OF ISSUE/REVISIONS

DATE	REV. NO.	DESCRIPTION AND AUTHORITY
03-09-90	0	Procedure prepared per Request No. P89-453, initiated by S. J. Murray.
03-11-91	1	Revised to incorporate CIO C90-045 per Request No. P90-343.
08-05-93	0	Reissued to update technical content per Request No. P92-471, initiated by M. Harper and to incorporate CIO C93-138 Per Request P93-629.

CONTENTS

NON-CONTROLLED COPY

Section	Page
1.0 Purpose	4
2.0 Scope	4
3.0 Responsibilities	4
3.1 Facility Owner	4
3.2 Supervisor	4
3.3 Inspectors	5
4.0 Safety Requirements	6
5.0 Procedure	8
5.1 Filling out the Applicable Inspection Form	8
5.2 Inspecting Container Storage Areas in Active And Inactive HWMUs	10
5.3 Equipment Inspection	13
5.4 Above Ground RCRA Storage Tank Inspections	13
5.5 Surface Impoundment Inspections	14
5.6 Inspection of Process Units	15
5.7 Inspection of Tank Cars	16
5.8 Landfills	16
5.9 Sump Inspections	16
6.0 Definitions	17
7.0 Applicable Documents	19
7.1 Drivers	19
7.2 References	19

ATTACHMENTS/FORMS

Attachments

1 HWMU Identification 20
2 Pallet Drum Capacity & Stacking Limits 22
3 NFPA 30 23

Forms

1 "HWMU 1 - Fire Training Facility" 24
2 "HWMU 2 - DELETED"
3 "HWMU 3 - Waste Oil Storage in Garage" 25
4 "HWMU 4 - Drum Storage Near Loading Dock (Lab Bldg.)" 26
5 "HWMU 5 - Drum Storage Area South of W-26 (Lab Bldg.)" 27
6 "HWMU 6 - Drummed HF Storage Area (In Plt 4)" 28
7 "HWMU 7 - Drummed HF Storage Area (NW of Plt 4)" 29
8 "HWMU 8 - Drummed HF Storage Area (South of Cooling Towers)" 30
9 "HWMU 9 - DELETED"
10 "HWMU 10 - NAR System Components" 31
11 "HWMU 11 - Tank Farm Sump" 33
12 "HWMU 12 - Wheelabrator (Bldg 66)" 34
13 "HWMU 13 - Wheelabrator Dust Collector (Bldg 66)" 35
14 "HWMU 14 - Box Furnace" 36
15 "HWMU 15 - Oxidation Furnace No. 1" 37
16 "HWMU 16 - Primary Calciner" 38
17 "HWMU 17 - Plt 8 East Drum Storage Pad" . . . . . [illegible]
18 "HWMU 18 - Plt 8 West Drum Storage Pad" . . . . . [illegible]
19 "HWMU 19 - CP Storage Warehouse (Bldg 66)" 41
20 "HWMU 20 - Plant 1 Pad" 42
21 "HWMU 21 - HILCO Oil Recovery System" 43
22 "HWMU 22 - Abandoned Sump West of Pilot Plant" 45
23 "HWMU 23 - DELETED"
24 "HWMU 24 - DELETED"
25 "HWMU 25 - Plant 1 Storage Bldg (Bldg 67) 46
26 "HWMU 26 - Detrex Still" 47
27 "HWMU 27 - Waste Pit No. 4" 48
28 "HWMU 28 - Trane Thermal Liquid Incinerator" 49
29 "HWMU 29 - Plant 8 Warehouse (Bldg 80)" 50
30 "HWMU 30 - DELETED"
31 "HWMU 31 - Tank T-5 (Solvent, Bulk Storage)" 51
32 "HWMU 32 - Tank T-6 (Solvent, Bulk Storage)" 52
33 "HWMU 33 - Pilot Plant Warehouse (Bldg 68)" 53
34 "HWMU 34 - KC2 Warehouse (Bldg 63)" 54
35 "HWMU 35 - Plant 9 Warehouse (Bldg 81)" 55
36 "HWMU 36 - Storage Pad North of Plant 6" 56
37 "HWMU 37 - Plant 6 Warehouse (Bldg 79)" 57
38 "HWMU 38 - HF Tank Car" 58
39 "HWMU 39 - DELETED"

0204

REMEDIATION SUPPORT OPERATIONS
TEMPORARY CHANGE NOTICE (TCN)

ONLY ONE TCN CHANGE PERMITTED PER DOCUMENT PAGE

1. NOTE: TCN not valid without Supervisor signature, Manager initials and Operator signature (when required).

SUPERVISOR: Matt Harper EXT: 6560 SIGNATURE: (Signature on File)

OPERATOR: Todd Craig EXT: 6346 SIGNATURE: (Signature on File)

DOCUMENT OWNER: G. Hazlewood SUPV. ORG.: WPM CHARGE NUMBER: 8ABB1

2. EFFECTIVE DATE OF CHANGE: 04-10-95

3. EXPIRATION DATE OF CHANGE: 07-01-95 ***NOTE: Maximum effective period six months.***

4. AFFECTED DOCUMENT NUMBER: 20-C-616

5. AFFECTED PAGE NUMBER 3

6. DOCUMENT ISSUE DATE: 09-07-94 REVISION NUMBER: 0

Enter each item number and associated change separately.

1) Change 40 "HWMU 40 - Bio-Surge Lagoon" to read as 40 "HWMU 40 - DELETE

8. PROCEDURE ADMINISTRATION TCN ACTION REQUIRED (Check as Appropriate)

8a. ☐ EFFECTIVE PERIOD > 30 DAYS. DISTRIBUTE TCN AND INCORPORATE INTO AFFECTED DOCUMENT BEFORE TCN EXPIRES.

8b. ☐ EFFECTIVE PERIOD > 30 DAYS. DISTRIBUTE TCN BUT DO NOT INCORPORATE. ALL TCN TO EXPIRE.

8c. ☐ EFFECTIVE PERIOD < 30 DAYS. DO NOT DISTRIBUTE. ALLOW TCN TO EXPIRE.

6989

ATTACHMENTS/FORMS (cont.)

40 "HWMU 40 - Bio-Surge Lagoon" 59
41 "HWMU 41 - Sludge Drying Beds" 60
42 "HWMU 42 - Waste Pit No. 5" 61
43 "HWMU 43 - DELETED"
44 "HWMU 44 - DELETED"
45 "HWMU 45 - DELETED"
46 "HWMU 46 - UNH Tanks (NFS Storage Area)" 62
47 "HWMU 47 - UNH Tanks (North of Plt 2)" 63
48 "HWMU 48 - UNH Tanks (SE of Plt 2)" 64
49 "HWMU 49 - UNH Tanks (Digestion Area, 2 Locations)" 65
50 "HWMU 50 - UNH Tanks (Raffinate Bldg, 2 Locations)" 66
51 "HWMU 51 - Experimental Treatment Facility (ETF)" 67
52 "HWMU 52 - North & South Solvent Tanks (P. Plt)" 68
53 "HWMU 53 - Safe Geometry Digestion Sump" 69
54 "HWMU 54 - Thorium Nitrate Tank T2" 70
55 "Surface Impoundment - Daily Freeboard Inspection Log" 71
56 "RCRA Warehouse - Building--Operation Equipment Log 72

1.0 PURPOSE

The purpose of this procedure is to provide the inspection requirements for Hazardous Waste Management Units (HWMUs) at the Fernald Environmental Management Project (FEMP).

2.0 SCOPE

This procedure applies to personnel involved in the inspection of active and inactive HWMUs.

3.0 RESPONSIBILITIES

3.1 **Facility Owners or Designee in the Facility Owners absence** shall be responsible for the following:

3.1.1 Coordinating assistance from support organization as required.

3.1.2 Controlling unauthorized access to HWMUs.

3.1.3 Ensuring the inspection log(s) are completely and correctly filled out.

3.1.4 Signing and distributing inspection logs to the Waste Compliance/RCRA Operating Re

3.1.5 Ensuring authorized storage configurations, aisle spacings, waste segregation and other storage requirements are maintained.

3.1.6 Ensuring that nuclear criticality safety and applicable HWMU signs (per this procedure) are posted.

3.1.7 Ensuring that there is a copy of the RCRA Contingency Plan available for use.

3.1.8 Maintaining HWMUs in compliance with all DOE Orders and regulatory requirements.

3.2 **Supervisor** or Designee in the Supervisor's absence shall be responsible for the following:

3.2.1 Ensuring personnel conducting inspections or working within a HWMU are qualified per the established training requirements identified by the Division Manager.

3.2.2 Initiating corrective actions.

3.2.3 Recording actions taken, including completion date, on the inspection log.

3.0 RESPONSIBILITIES (cont.)

6989

3.2.4 Contacting Industrial Hygiene (IH) or Radiological Control to determine the appropriate respiratory protection and/or additional protective clothing for the task being performed.

3.2.5 Issuing the required respiratory equipment and/or Personal Protective Equipment (PPE) to operators/inspectors.

3.2.6 Notifying the Assistant Emergency Duty Officer (AEDO) and completing report following SSOP-1018 and ED-0001 if a spill occurs.

3.2.7 Obtaining and posting permits that may be required.

3.2.8 Maintain a current list of safety equipment from Attachment G-1 of the RCRA Contingency Plan at or near the location of the HWMU for inspection purposes.

3.2.9 Ensure that all operation equipment/tools used to manage/inspect the HWMU are surveyed and/or decontaminated prior to removal from the unit.

3.2.10 Ensuring that personnel performing HWMU inspections are trained to this procedure and qualified to do the work by contacting the training coordinator at ext. 6821 to obtain records.

3.3 **Inspectors** shall be responsible for the following:

3.3.1 Complete the required HWMU training courses.

3.3.2 Complying with this procedure.

3.3.3 Taking immediate action to control a spill or leak.

3.3.4 Notifying the Supervisor (or AEDO in Supervisor's absence) of the magnitude, location, status, and type of spilled material.

3.3.5 Notify the Supervisor of any deficiencies with the HWMU.

4.0 SAFETY REQUIREMENTS

4.1 Safety glasses shall be worn unless other eye protection is specified by IH and/or Radiological Control on applicable permits (i.e. cover goggles, face shields or respirators).

4.2 Cover goggles/face shields, neoprene rubber gloves, and a rubber apron shall be worn when handling caustic, acids, or any other chemical which could cause immediate skin damage upon contact.

4.3 Respiratory protection and/or PPE issued by the Supervisor shall be worn when required by IH and/or Radiological Control.

4.4 Leather-palm gloves shall be worn when handling drums, operating equipment, and when handling rough/sharp-edges.

4.5 Personal safety equipment (eye-wash, fire extinguishers, safety showers) shall be operational and readily available for emergencies.

4.6 A communications device, such as a telephone or hand-held two-way radio, capable of summoning emergency assistance shall be immediately available to persons conducting work/inspections in/or around HWMUs (device must be operationally tested prior to entering the HWMU).

4.7 Any release of hazardous waste shall be reported immediately per SOP 20-C-606, "Hazardous Material Spill Clean-Up."

4.8 Employees shall have reviewed, and be familiar with the information contained in the MSDS and the MEF for the chemical/hazardous materials that may be used or encountered, if there are any applicable MSDSs or MEFs.

4.9 Personnel shall have access to emergency response equipment.

4.0 SAFETY REQUIREMENTS (cont.)

4.10 A "Chemical Hazardous Work Permit," and/or "Radiation Work Permit," shall be completed before conducting any work (excluding inspections) at any HWMU.

NOTE: There are HWMUs that are located in contamination areas that RWPs are required even for inspections, but these areas already have established RWPs.

4.11 Any circumstance which could have resulted in an intake of radioactive materials by inhalation, ingestion, or absorption shall immediately be reported to a Supervisor. The Supervisor shall immediately report the circumstance of possible radioactive materials intake to ES&H Radiological Control Department for evaluation. When the suspect isotope is uranium, the involved personnel shall report to the Urine Sampling Station at the end of their shift to complete an Incident Investigation Report (IIR) (Form No. FS-F-1458), and submit an incident urine sample. The involved personnel shall also report to the Urine Sampling Station at the start of their next shift to submit a follow-up urine sample. When the suspect isotope is other than uranium , the involved personnel shall report to the Dosimetry Section of the Radiological Control Department for further determination of actions. Employees are responsible for complying with additional requirements as specified by the Radiological Control Section.

4.12 Any situation which could have resulted in the inhalation, ingestion, or absorption of a hazardous material shall immediately be reported to a Supervisor or to the Assistant Emergency Duty Officer (AEDO), who will immediately report the circumstances to Medical and Industrial Hygiene. The involved personnel shall be directed by the Supervisor or AEDO as to when and where to report for medical evaluation, completion of an Incident Investigation Report (IIR) (Form No. FS-F-1458), and submitting bioassay samples (e.g., blood, urine). Employees are responsible for complying with any additional requirements as specified by ES&H.

4.13 Safety equipment shall be inspected for availability and good working condition.

4.14 All equipment storage locations (i.e. Safety and Emergency) shall be visible and accessible to personnel who work in this area.

4.15 For any confined space entries (i.e. into tanks, sumps, etc.) a "Confined Space Entry Permit" is required.

5.0 PROCEDURE

5.1 The applicable "Hazardous Waste Management Unit (HWMU) Inspection Log," (See Forms 1 through 56) shall be filled out as follows:

5.1.1 The top portion of the inspection log shall be completed.

- Inspector must sign and date, including Badge # after inspection has been completed.
- Facility Owner must review, sign and date, then send to RCRA Operating Records.

5.1.2 A check mark shall be entered in the "Acceptable" or "Unacceptable" column, as applicable, for each item number.

5.1.3 If item is checked "Unacceptable," a brief description of the observation and corrective action taken shall be entered in the appropriate column. The "Comments" portion shall be used if additional space is required.

NOTE 1: Items deemed unacceptable which pose an imminent hazard, or where a hazard has already occurred, shall be corrected immediately.

NOTE 2: Any discrepancies found and corrective actions taken must be recorded on the inspection log, when the work order is requested and must remain on all inspection forms until it has been completed.

5.1.4 The type of HWMU being inspected (Refer to Attachment 1) shall be identified by the number of the unit at the top of the applicable inspection log.

5.1.5 The required HWMU signs shall be readable from twenty-five feet away and posted in sufficient quantities to be seen from any approach to the unit.

5.1.6 A **"DANGER Authorized Personnel Only,"** or its equivalent, shall be in place at every HWMU at the FEMP.

5.1.7 A **"No Smoking, Matches, or Open Flame"** sign, or equivalent, is required at applicable HWMUs.

6989

5.0 PROCEDURE (cont.)

5.1.8 PCB warning signs shall be posted at units which are currently storing or contain PCBs. Drums that contain PCBs must also have a PCB marking (labels) attached to the drum (currently this pertains to Bldg. 81/HWMU #35 only).

5.1.9 Changes to the configuration of the HWMU or change in type or location of safety equipment at the HWMU shall be recorded in the "Comments" section of the applicable inspection log.

5.1.10 If the container is asbestos (Material Type 028) verify that the container is marked with the words **"DANGER ASBESTOS CONTAINING MATERIAL."**

5.1.11 The HWMU Boundary marker (yellow chain, yellow/magenta rope, or fencing) shall be intact and in position.

5.1.12 The area in/around the HWMU shall be inspected for debris and/or trash and the unauthorized material.

5.1.13 Tank, Tank Car Manways , and fill pipes shall be closed and have a seal installed to prevent tampering.

5.1.14 Prior to the movement of RCRA waste inspect the load/unload and staging area(s) per SOP 20-C-500.

5.1.15 Daily inspections shall be conducted on the following HWMUs:

A. Areas where uncharacterized material is being stored.
B. RCRA storage tanks (except T-5 and T-6).
C. Railroad tank cars.
D. Sumps.
E. Surface impoundment freeboard only.
F. Areas where RCRA material is stored outdoors.

5.0 PROCEDURE (cont.)

NOTE 1: Surface impoundments and landfills shall also be inspected after storms have occurred.

NOTE 2: Containers that are under evaluation for RCRA determination are subject to a daily inspection.

5.1.16 Weekly inspections shall be conducted on the following HWMUs:

A. Inside of buildings (except for HWMU #26).
B. RCRA storage tanks T-5 and T-6.
C. Surface impoundments (except freeboard check).
D. Landfills.
E. Inactive process units.
F. Operations equipment used in active container storage areas.
G. HF tank car area.
H. Areas where RCRA material was previously stored.

5.2 Inspecting Container Storage Areas in Active and Inactive HWMUs

5.2.1 Inspect the building/pad condition using the following criteria:

- Check the structural integrity of the pad surface and curbing for cracks and structural failure.
- Check around the pad for erosion problems and dead vegetation.
- Check around the pad for signs of a release (such as a pool of liquid or stains).
- Check the condition of the ramps.
- Check the building structures for holes in the roof or walls which could allow precipitation to enter the HWMU.
- Note any discrepancies on the inspection form and report them to the supervisor.

5.0 PROCEDURE (cont.)

5.2.2 Inspecting Secondary Containment Systems of Active and Inactive Container Storage Area HWMUs

- Verify the containment system is sealed and sufficiently impervious to contain spills, leaks or accumulated precipitation.
- Check for visible unsealed gaps, holes, cracks or breaks in the floor, curbs or dikes of the containment system.
- Note any potential breach of the containment system on the inspection form and report the observation to the Supervisor.
- Check the drainage features (including sumps, drains, and troughs) for standing or pooled liquids.
- Check for visible signs of spills (i.e., liquids or solid material on the floor and/or stains).
- After a storm look for pooled liquids, clogged drains, and/or erosion.
- Note any discrepancies on the inspection form and report them to the supervisor.

NOTE: Standing liquids shall be removed within 24 hours.

5.2.3 Inspecting Containers Within Active Container Storage Area HWMUs

- Check that lids and bungs on containers are secure.
- Check that containers are on pallets.
- Check that pallets are stacked securely and stored in a safe manner with no overhanging drums.
- Check for containers that are leaking waste, corroded, bulging and/or damaged.

9800

5.0 PROCEDURES (cont.)

NOTE: The inspector must document on the inspection form Type I, II, and III leakers as required by the Drum Management Plan.

- Check that pallets are stored far enough from the containment edge to prevent waste escaping if a leak occurs in a container.

- Check that containers known to contain hazardous waste have a legible hazardous waste marking (label) affixed.

NOTE: Hazardous Waste Markings (Labels) on newly generated containers of hazardous waste will only contain the address, EPA ID Codes, and the accumulation start date until time of shipment when the remainder of the label will be completed. Backlog containers already in storage will not need the proper shipping name removed until time of shipment offsite (at that time the label may need to be changed in regards to the new HM181 regulations). However, markings (labels) may be changed as time permits.

- A three foot aisle spacing shall be maintained between pallets, curbs, and between rows of pallets within a storage bay or as specified by Waste Operations Support.

NOTE 1: Regulatory guidelines state that aisle spacing between rows is a minimum of 22-inches (indoor drum storage) or 24-inches (outdoor drum storage).

NOTE 2: This does not apply to Nuclear Material.

- Check the height of stacked drums per Attachment 2.

- Note any discrepancies on the inspection form and report them to the supervisor.

5.2.4 Reactivity Group Code (RGCs) Inspection

- Check that all "Active Container Storage" areas have material RGCs clearly posted at the boundary (such as end of rows, bays, or on building entrances) of each separate material RGC area.

5.0 PROCEDURES (cont.)

- Inspect the unit Reactivity Group Codes per the following criteria:
  - Check that containers are marked with a Reactivity Group Code.
  - Containers of incompatible material shall be separated by distance or by a physical barrier such as a dike, berm, or wall.
  - Refer to SOP 20-C-630 (Attachment 4) for the Hazardous Waste Storage Compatibility Chart.
  - Check for the separation of incompatible material.
  - For containers that have a RGC or k "ignitable" the stacking should be in accordance with NFPA 30 (See Attachment 3).
  - Note any discrepancies on the inspection form and report then to the supervisor.

5.3 Equipment Inspection

5.3.1 Inspect the condition of operation equipment in active container storage areas (RCRA Warehouse) per the applicable "RCRA Warehouse-Building Operation Equipment Log" (See Form 56).

5.3.2 Note any discrepancies on the inspection form and report them to the Supervisor.

5.4 Above Ground RCRA Storage Tank Inspections

5.4.1 Check that tank and auxiliary equipment (stand-pipes, fill pipes, vents, valves, or transfer pumps) are isolated or locked out.

5.4.2 Check that lids/manways are locked or have a tamper-proof seal installed.

5.4.3 Check the tank structure and all associated piping for deterioration (look for corrosion/erosion, leaking fixtures/seams etc.) that could affect tank integrity.

5.0 PROCEDURES (cont.)

5.4.4 Check the secondary containment per Item 5.2.2.

NOTE: Make a notation on the applicable form if no secondary containment area exits.

5.4.5 Check in and around the unit for erosion, dead vegetation and signs of material release.

5.4.6 Check the condition of overfill/spill control equipment.

NOTE: Make a notation on the applicable form if overfill/spill control equipment is not installed.

5.4.7 Check the operation of monitoring equipment (such as contact level indicator or high level alarm).

NOTE: If no monitoring equipment is installed, use lock-and-tag.

5.4.8 Check that "Hazardous Waste" signs or markings (labels) are posted on the tanks (per 40 CFR 262.34 (a) (3)).

5.4.9 Note any discrepancies on the inspection form and report them to the supervisor.

5.5 Surface Impoundment Inspection

5.5.1 Check that the containment dike/berm will prevent water run-off and run-on during rainfall events.

NOTE: The top of the dike is above the surrounding ground so that rainfall cannot overtop the dike.

5.5.2 Check around the dike/berm for dead vegetation.

5.5.3 Check the dike/berm for cracks, holes, breaks, and areas where the dike is slumped.

5.0 PROCEDURES (cont.)

6989

5.5.4 Check for erosion.

NOTE: A separate daily inspection is not required on the day the weekly inspection is conducted.

5.5.5 Check the impoundment freeboard as follows:

- Locate the freeboard indicator.
- Check the indicator to determine the freeboard level.
- Record the level on the "HWMU Surface Impoundment Daily Freeboard Inspection Log" (See Form 55).

5.5.6 Check the sides of the berm, dike, and containment basin for damage and deterioration.

5.5.7 Check the liners (if installed) for rips, tears, and seam separation.

5.5.8 Record discrepancies in the "Comment" portion of the inspection log.

5.5.9 Note any discrepancies on the inspection form and report them to the supervisor.

5.6 Inspection of Process Units

5.6.1 Check for visible signs of release (such as residues or dead vegetation).

5.6.2 Check for damage such as broken piping and dented tanks.

5.6.3 Check for units with components removed.

5.6.4 Check for open unit components.

5.6.5 If the unit has an associated tank or tanks, perform Items 5.4.

5.6.6 Note any discrepancies on the inspection form and report them to the supervisor.

5.0 PROCEDURES (cont.)

5.7 Inspection of Tank Cars

5.7.1 Check the tank for stains.

5.7.2 Check under the tank for dead vegetation or pooled liquid.

5.7.3 Check that the tank is closed.

5.7.4 Check that the tank lid/manway is locked or has an intact tamper-proof seal installed.

5.7.5 Check the tank for damage broken valves, cracks, or holes.

5.7.6 Check the secondary containment area per Item 5.2.2.

- Make a notation on the applicable form if no secondary containment area exits.

5.7.7 Note any discrepancies on the inspection form and report them to the supervisor.

5.8 Landfills

5.8.1 Check the dikes and trenches (run-on, run-off controls) around the unit for deterioration and/or erosion.

5.8.2 Check that wind dispersal control systems such as rubber panels and hold down pillows (if present) are operational.

5.8.3 Check the overtopping control systems for deterioration/damage (such as broken pipes or dikes).

5.8.4 Check the overtopping control system for malfunctions (such as inoperative pumps).

5.8.5 Note any discrepancies on the inspection form and report them to the supervisor.

5.9 Sump Inspection

5.9.1 Check the drainage features for standing liquid.

5.9.2 Check that overfill monitoring devices (such as level indicator or high level alarm) are operational.

5.0 PROCEDURES (cont.)

5.9.3 Check inside the sump for foreign objects.

5.9.4 Check around the sump and the sump walls for cracks, holes, gaps, and structural defects.

5.9.5 Check outside the sump perimeter for erosion.

5.9.6 Check around the sump for dead vegetation, stains, and other signs of a release.

5.9.7 If the sump is being used as a containment, check for standing liquid. In some cases the sump will not pump dry, they almost always have some standing liquid.

5.9.8 If standing liquid is found immediately notify the Facility Owner.

NOTE: Notification shall be in addition to the entry on the appropriate inspection sheet.

5.9.9 Check the freeboard per Step 5.5.5.

5.9.10 Note any discrepancies on the inspection form and report them to the supervisor.

6.0 DEFINITIONS

6.1 Active Container Storage Areas - Units authorized to store RCRA hazardous wastes.

6.2 Bulge - A swollen area, convex distortion, or outward bend.

6.3 Corrosive - Aqueous wastes with a pH ≤ 2 or ≥ 12.5.

6.4 Dent - A crease, depression, or hollow made by a blow or pressure or a concave distortion.

6.5 Freeboard - The distance between the top of a surface impoundment/sump content and the top of the containment dike/berm.

6.6 Hazardous Waste - A waste material listed in 40 CFR 261 or which exhibits the characteristic of ignitability, corrosivity, reactivity, or TCLP toxicity.

6.7 Hazardous Waste Management Unit (HWMU) - An identifiable area where hazardous waste is or has been treated, stored (more than 90 days), or disposed of, or systematically released into the environment.

6.0 DEFINITIONS (cont.)

6.8 Hazardous Waste Storage Facility - Any unit/area where hazardous waste is stored.

6.9 Hole - An opening that penetrates the container, including breach, gouge, puncture, or leak.

6.10 Ignitable - Liquid or non-liquid wastes capable of combustion due to heat, friction, absorption of moisture, or spontaneous chemical changes.

6.11 Inactive Container Storage Areas - Units that do not actually store hazardous waste, but have been identified as HWMUs.

6.12 Landfill - A disposal facility or part of a facility where hazardous waste is placed in or on land.

6.13 Inspectors - Personnel who have successfully completed the training requirements to inspect HWMUs.

6.14 Process Unit - Equipment that was used during the production years and is no longer active, and that meets the definition of HWMU.

6.15 Reactive - Wastes that respond violently when contacting another substance, forming potentially explosive mixtures or generating toxic gases with water, generating toxic gases (cyanide or sulfide) at pH between 2 and 12.5, or detonating or exploding at standard temperature and pressure or when heated under confinement.

6.16 Resource Conservation and Recovery Act (RCRA) - The Congressional Act which establishes safe, environmentally acceptable, strict "cradle to grave" management control and practices for specific hazardous wastes.

6.17 Spill - Any unplanned event that permits the entry of hazardous waste into the ground, water, or air.

6.18 Surface Impoundment - A topographic depression, man-made excavation, or diked area formed primarily of earthen materials designed to hold liquid hazardous waste or wastes containing free liquids.

6.19 Toxicity Characteristic Leaching Procedure (TCLP) - An analytical process to determine the type and concentration of hazardous contaminants in waste material.

7.0 APPLICABLE DOCUMENTS

6989

7.1 Drivers

7.1.1 "Regulatory Compliance Guide (RCG)," Section C-1

7.1.2 "Drum Management Plan" (Dated 1990)

7.1.3 5480.19, "Conduct of Operations Requirements for DOE Facilities"

7.1.4 40 CFR 264 Series, "Standards for Owners and Operators of Hazardous Waste Treatment, Storage, and Disposal Facilities"

7.1.5 40 CFR 761 Series, "Polychlorinated Biphenyls (PCBs) Manufacturing, Processing, Distributing in Commerce, and use Prohibitions"

7.1.6 49 CFR 171-173 Series, "Hazardous Materials Regulations, Department of Transportation"

7.1.7 OAC 3745-54 Series, "Standards for the Management of Hazardous Waste"

7.1.8 OAC 3745-65 Series, "Environmental Safety and Health (Directives)"

7.1.9 DOE 5400 Series, "Environmental Safety and Health (Directives)"

7.1.10 Stipulated Amendment to the Consent Decree (Signed/Dated January 22, 1993)

7.1.11 40 CFR Parts 265.15 and 265.174

7.1.12 RCRA Part B Permit (as required by the EPA)

7.2 References

7.2.1 SOP 20-C-631, "Receipt Inspection and Placement of Hazardous, Mixed, PCB and Asbestos Wastes into Storage"

7.2.2 SOP 20-C-606, "Hazardous Material Spill Clean-Up"

7.2.3 SOP 20-C-600, "Overpacking Defective Containers"

7.2.4 SOP 20-C-500, "Inspecting RCRA Waste Load/Unload and Staging Areas"

ATTACHMENT 1
HWMU IDENTIFICATION (Sheet 1 of 2)

HWMU NO.	UNIT	TYPE OF HWMU	SOP SECT.	FR OF INSP
1	Fire Training Facility	Landfill	5.8	Note 1
2	DELETED			
3	Waste Oil Storage In Garage	Inactive Container Storage	5.2.1 and 5.2.2	Weekly
4	Drum Storage Area Near Loading Dock (Lab Bldg)	Inactive Container Storage	5.2.1 and 5.2.2	Weekly
5	Drum Storage Area South of W-26 (Lab Bldg)	Inactive Container Storage	5.2.1 and 5.2.2	Weekly
6	Drummed HF Storage Area (In Plt 4)	Inactive Container Storage	5.2.1 and 5.2.2	Weekly
7	Drummed HF Storage Area (NW of Plant 4)	Inactive Container Storage	5.2.1 and 5.2.2	Weekly
8	Drummed HF Storage Area (S of Cooling Towers)	Inactive Container Storage	5.2.1 and 5.2.2	Weekly
9	DELETED			
10	NAR System Components	Process Unit (With Tanks)	5.6	Daily
11	Tank Farm Sump	Surface Impoundment	5.5	Note 1
12	Wheelabrator (Bldg 66)	Process Unit	5.6	W
13	Wheelabrator Dust Collector (Bldg 66)	Process Unit	5.6	Weekly
14	Box Furnace	Process Unit	5.6	Weekly
15	Oxidation Furnace No. 1	Process Unit	5.6	Weekly
16	Primary Calciner	Process Unit	5.6	Weekly
17	Plt 8 East Drum Storage Pad	Active Container Storage	5.2.1 and 5.2.2	Weekly
18	Plt 8 West Drum Storage Pad	Active Container Storage	5.2.1 and 5.2.2	Weekly
19	CP Storage Warehouse (Bldg 56)	Active Container Storage	5.2.1 and 5.2.2	Weekly
20	Plant 1 Pad	Active Container Storage	5.2.1 and 5.2.2	Daily
21	HILCO Oil Recovery System	Process Unit (With Tanks)	5.6	Weekly
22	Abandoned Sump West of Pilot Plant	Sump	5.9	Weekly
23	DELETED			
24	DELETED			
25	Plant 1 Storage Bldg (Bldg 67)	Inactive Container Storage	5.2.1 and 5.2.2	Note 2
26	Detrex Still	Process Unit	5.6	Daily
27	Waste Pit No. 4	Landfill	5.8	Note 1
28	Trane Thermal Liquid Incinerator	Process Unit (with Tanks)	5.6	

NOTE 1: In addition to weekly inspections, landfills and surface impoundments must also be inspected after storms. D must be conducted on surface impoundment freeboard level.

NOTE 2: The interior of Building 67 (HWMU 25) shall be inspected monthly and the exterior inspected weekly.

6989

ATTACHMENT 1
HWMU IDENTIFICATION (Sheet 2 of 2)

HWMU NO.	UNIT	TYPE OF HWMU	SOP SECT.	FREQ OF INSP
29	Plant 8 Warehouse (Bldg 80)	Active Container Storage	5.2.1 and 5.2.2	Weekly
31	Tank T-5 (Solvent, Bulk Storage)	RCRA Storage Tank	5.4	Weekly
32	Tank T-6 (Solvent, Bulk Storage)	RCRA Storage Tank	5.4	Weekly
33	Pilot Plant Warehouse (Bldg 68)	Active Container Storage	5.2.1 and 5.2.2	Weekly
34	KC2 Warehouse (Bldg 63)	Active Container Storage	5.2.1 and 5.2.2	Weekly
35	Plant 9 Warehouse (Bldg 81)	Active Container Storage	5.2.1 and 5.2.2	Weekly
36	Storage Pad North of Plant 6	Inactive Container Storage	5.2.1 and 5.2.2	Weekly
37	Plant 6 Warehouse (Bldg 79)	Active Container Storage	5.2.1 and 5.2.2	Weekly
38	HF Tank Car (area)	Inactive Container Storage	5.2.1 and 5.2.2	Weekly
39	DELETED			
40	Bio-Surge Lagoon	Surface Impoundment	5.5	Note 1
41	Sludge Drying Beds	Surface Impoundment	5.5	Note 1
42	Waste Pit No. 5	Surface Impoundment	5.5	Note 1
43	DELETED			
44	DELETED			
45	DELETED			
46	UNH Tanks (NFS Storage Area)	RCRA Storage Tank	5.4	Daily
47	UNH Tanks (North of Plt 2)	RCRA Storage Tank	5.4	Daily
48	UNH Tanks (SE of Plt 2)	RCRA Storage Tank	5.4	Daily
49	UNH Tanks (Digestion Area, 2 Locations)	RCRA Storage Tank	5.4	Daily
50	UNH Tanks (Raffinate Bldg, 2 Locations)	RCRA Storage Tank	5.4	Daily
51	Experimental Treatment Facility (ETF)	Inactive Container Storage	5.2.1 and 5.2.2	Weekly
52	North & South Solvent Tanks (P. Plant)	RCRA Storage Tank	5.4	Weekly
53	Safe Geometry Digestion Sump	Sump	5.9	Daily
54	Thorium Nitrate Tank T2	RCRA Storage Tank	5.4	Daily

NOTE 1: In addition to weekly inspections, landfills and surface impoundments must also be inspected after storms. Daily inspect must be conducted on surface impoundment freeboard level.

9808

ATTACHMENT 2
PALLET DRUM CAPACITY & STACKING LIMITS

CONTAINER	DRUM/PALLET	MAXIMUM INDOOR STACKING HEIGHT	MAXIMUM OUTDOOR STACKING HEIGHT
85-Gallon Overpack	3	3 Pallets	3 Pallets
55-Gallon Drum	4	4 Pallets	3 Pallets
30-Gallon Drum	4	4 Pallets	3 Pallets
10-Gallon Pail	9	7 Pallets	3 Pallets
5-Gallon Pail	16	7 Pallets	3 Pallets
110-Gallon Overpack	2	1 Pallet on Top Pallet of Stack	3 Pallets
White Metal Boxes	N/A	3 High	3 High

NOTE 1: If the container has a RGC of K "Ignitable" the stacking of containers should be in accordance with NFPA 30. Refer to the MEF for the flashpoint to determine the class (i.e. <73°F - Class I-A flammable). (See Attachment 3).

NOTE 2: Stacking four-high may also consist of any of the following:

- Three pallet of 55-gallon drums with either one pallet of 85-gallon drums or one pallet of 110-gallon drums on top.
- Two pallets of 55-gallon drums with two pallets of 85-gallon drums on top.

6988

ATTACHMENT 3
NFPA 30

EPA RCRA Definitions		NFPA 30 Definitions	
RCRA Ignitable Liquid (D001)	Flash Point <140°F	NFPA Class I-A Flammable Liquid	Flash Point <73°F Boiling Point <100°F
		NFPA Class I-B Flammable Liquid	Flash Point <73°F Boiling Point ≥100°F
		NFPA Class I-C Flammable Liquid	Flash Point ≥73°F and <100°F
		NFPA Class II Combustible Liquid	Flash Point ≥100°F and <140°F
		NFPA Class III-A Combustible Liquid	Flash Point ≥140°F and <200°F
		NFPA Class III-B Combustible Liquid	Flash Point ≥200°F

Indoor Unprotected Storage of Liquids in Containers

	Container Storage		
Class	Max. Pile Height (ft)	Max. Quant. per Pile (gal)	Max. Total Quant.(gal)*
IA	5	660	660
IB	5	1,375	1,375
IC	5	2,750	2,750
II	10	8,250	8,250
IIIA	15	27,500	27,500
IIIB	15	55,000	55,000

0866

HWMU 1
Fire Training Facility

Inspector's Name:	Badge #:	Date:	Time:
Facility Owner's Signature:		Date:	Time:

Item No.	Item Description	Acceptable	Unacceptable	Observations/Corrective Actions To Be Completed	Date Action Completed
1	Signs: Danger-Authorized Personnel Only				
2	Emergency & Prior To Entry Contact				
3	Boundary Markers: yellow chain				
4	Area Condition				

Comments: _____

Distribution:

Facility Owner: Facility Owner reviews, signs, and distributes log to:
RCRA Operating Records

RCRA Operating Records Signature:	Date:

6989

HWMU 3
Waste Oil Storage in Garage

Inactiv
Container Sto

Inspector's Name:	Badge #:	Date:	Time:
Facility Owner's Signature:		Date:	Time:

Item No.	Item Description	Acceptable	Unacceptable	Observations/Corrective Actions To Be Completed	Date Action Completed
1	Signs: Danger-Authorized Personnel Only				
2	Emergency & Prior To Entry Contact				
3	Boundary Markers: (Chain)				
4	Bldg Condition				

Comments: _____

Distribution:

Facility Owner: Facility Owner reviews, signs, and distributes log to:
RCRA Operating Records

RCRA Operating Records Signature:	Date:

0808

HWMU 4
Drum Storage Area Near Loading Dock (Lab)

Inactive
Container Stora

Inspector's Name:	Badge #:	Date:	Time:
Facility Owner's Signature:		Date:	Time:

Item No.	Item Description	Acceptable	Unacceptable	Observations/Corrective Actions To Be Completed	Date Action Completed
1	Signs: Danger-Authorized Personnel Only				
2	Emergency & Prior To Entry Contact				
3	Boundary Markers: (Chain, Rope, etc.)				
4	Area Condition				

Comments: _____

Distribution:

Facility Owner: Facility Owner reviews, signs, and distributes log to:
RCRA Operating Records

RCRA Operating Records Signature:	Date:

HWMU 4
DRUM STORAGE AREA NEAR LOADING DOCK (Lab Bldg)
FORM 4

6989

HWMU 5
Drum Storage Area South Of W-26 (Lab)

Inactive
Container Stor

Inspector's Name:	Badge #:	Date:	Time:
Facility Owner's Signature:		Date:	Time:

Item No.	Item Description	Acceptable	Unacceptable	Observations/Corrective Actions To Be Completed	Date Action Completed
1	Signs: Danger-Authorized Personnel Only				
2	No Smoking or Open Flame				
3	Emergency & Prior To Entry Contact				
4	Boundary Markers: (Chain)				
5	Area Condition				
6	Safety Equipment				

Comments: _____

Distribution:

Facility Owner: Facility Owner reviews, signs, and distributes log to:
RCRA Operating Records

RCRA Operating Records Signature:	Date:

HWMU 5
DRUM STORAGE AREA SOUTH OF W-26 (Lab Bldg)
FORM 5

0808

HWMU 6
Drummed HF Storage Area (In Plant 4)

Inactive
Container Storag

Inspector's Name:	Badge #:	Date:	Time:
Facility Owner's Signature:		Date:	Time:

Item No.	Item Description	Acceptable	Unacceptable	Observations/Corrective Actions To Be Completed	Date Action Completed
1	Signs: Danger-Authorized Personnel Only				
2	Emergency & Prior To Entry Contact				
3	Boundary Markers: (Chain)				
4	Bldg Condition				

Comments: _____

Distribution:

Facility Owner: Facility Owner reviews, signs, and distributes log to:
RCRA Operating Records

RCRA Operating Records Signature:	Date:

HWMU 6
DRUM HF STORAGE AREA (In Plant 4)
FORM 6

6989

HWMU 7
Drummed HF Storage Area (NW of Plt 4)

Inactiv
Container Sto

Inspector's Name:	Badge #:	Date:	Time:
Facility Owner's Signature:		Date:	Time:

Item No.	Item Description	Acceptable	Unacceptable	Observations/Corrective Actions To Be Completed	Date Action Completed
1	Signs: Danger-Authorized Personnel Only				
2	Emergency & Prior To Entry Contact				
3	Boundary Markers: (Chain, Rope, etc.)				
4	Area Condition				

Comments: _____

Distribution:
Facility Owner: Facility Owner reviews, signs, and distributes log to:
RCRA Operating Records

RCRA Operating Records Signature:	Date:

0803

HWMU 8
Drummed HF Storage Area (S. Of Cooling-Towers)

Inactive
Container St

Inspector's Name:	Badge #:	Date:	Time:
Facility Owner's Signature:		Date:	Time:

Item No.	Item Description	Acceptable	Unacceptable	Observations/Corrective Actions To Be Completed	Date Action Completed
1	Signs: Danger-Authorized Personnel Only				
2	Emergency & Prior To Entry Contact				
3	Boundary Markers: (Chain)				
4	Area Condition				

Comments: _____

Distribution:

Facility Owner: Facility Owner reviews, signs, and distributes log to:
RCRA Operating Records

RCRA Operating Records Signature:	Date:

6989

Process Unit
With Tanks

HWMU 10
NAR System Components
(Sheet 1 of 2)

Inspector's Name:	Badge #:	Date:	Time:
Facility Owner's Signature:		Date:	Time:

Item No.	Item Description	Acceptable	Unacceptable	Observations/Corrective Actions To Be Completed	Date Act Complet
1	Tanks: -Danger-Authorized Personnel Only -No Smoking or Open Flame -Emergency Contract				
2	Overfill/Spill Control Equipment				
3	Corrosion or Release of Waste				
4	Monitoring Equipment In Place (Content Level)				
5	Surrounding Area & Unit Integrity				
6	Condition Of Secondary Containment				
7	Safety Equipment				
8	Coolers E3E-210 & E3E-211, F3E-220: Signs: -Danger-Authorized Personnel Only -No Smoking Or Open Flame -Emergency Contact				
9	Corrosion Or Release Of Waste				
10	Surrounding Area & Unit Integrity				
11	Weir Box F3E-207, 213, 215, & 218: Signs: -Danger-Authorized Personnel Only -No Smoking Or Open Flame -Emergency Contact				
12	Corrosion Or Release Of Waste				
13	Surrounding Area & Unit Integrity				
14	Spill Response Equipment				

Comments: _____

Distribution:

Facility Owner: Facility Owner reviews, signs, and distributes log to: RCRA Operating Records .

RCRA Operating Records Signature:	Date:

0040

0800

REMEDIATION SUPPORT OPERATIONS
TEMPORARY CHANGE NOTICE (TCN)

ONLY ONE TCN CHANGE PERMITTED PER DOCUMENT PAGE

(Sheet 1 of 2)

1. NOTE: TCN not valid without Supervisor signature, Manager initials and Operator signature (when required).

SUPERVISOR: A.W. Paletta EXT: 6798 SIGNATURE: (Signature on File)

OPERATOR: J. Sexton EXT: 6798 SIGNATURE: Signature on File

DOCUMENT OWNER: G. Hazlewood SUPV. ORG.: WPM CHARGE NUMBER: 8ABN1

2. EFFECTIVE DATE OF CHANGE: 11-04-94

3. EXPIRATION DATE OF CHANGE: 05-04-95 ***NOTE: Maximum effective period six months.***

4. AFFECTED DOCUMENT NUMBER: SOP 20-C-616

5. AFFECTED PAGE NUMBER 31

6. DOCUMENT ISSUE DATE: 09-07-94 REVISION NUMBER: 0

7. CHANGE (Use additional sheets of paper if necessary):
Enter each item number and associated change separately.

1) HWMU 10 Item Description Number 8 is revised to add F3E-220 as follows:

8. PROCEDURE ADMINISTRATION TCN ACTION REQUIRED (Check as Appropriate)

8a. ☐ EFFECTIVE PERIOD > 30 DAYS. DISTRIBUTE TCN AND INCORPORATE INTO AFFECTED DOCUMENT BEFORE TCN EXPIRES.

8b. ☐ EFFECTIVE PERIOD > 30 DAYS. DISTRIBUTE TCN BUT DO NOT INCORPORATE. ALL TCN TO EXPIRE.

8c. ☐ EFFECTIVE PERIOD < 30 DAYS. DO NOT DISTRIBUTE. ALLOW TCN TO EXPIRE.

6989

Process
With T:

HWMU 10
NAR System Components
(Sheet 1 of 2)

Inspector's Name:	Badge #:	Date:	Time:
Facility Owner's Signature:		Date:	Time:

Item No.	Item Description	Acceptable	Unacceptable	Observations/Corrective Actions To Be Completed	Date Action Completed
1	**Tanks:** -Danger-Authorized Personnel Only -No Smoking or Open Flame -Emergency Contract				
2	Overfill/Spill Control Equipment				
3	Corrosion or Release of Waste				
4	Monitoring Equipment in Place (Content Level)				
5	Surrounding Area & Unit Integrity				
6	Condition Of Secondary Containment				
7	Safety Equipment				
8	**Coolers E3E-210 & E3E-211:** Signs: -Danger-Authorized Personnel Only -No Smoking Or Open Flame -Emergency Contact				
	Corrosion Or Release Of Waste				
10	Surrounding Area & Unit Integrity				
11	**Weir Box F3E-207, 213, 215, & 218:** Signs: -Danger-Authorized Personnel Only -No Smoking Or Open Flame -Emergency Contact				
12	Corrosion Or Release Of Waste				
13	Surrounding Area & Unit Integrity				
14	Spill Response Equipment				

Comments: _____

Distribution:

Facility Owner: Facility Owner reviews, signs, and distributes log to:
RCRA Operating Records

RCRA Operating Records Signature:	Date:

0868

HWMU 10
NAR System Components
(Sheet 2 of 2)

Process U
W

Inspector's Name:	Badge #:	Date:	Time:
Facility Owner's Signature:		Date:	Time:

Item No.	Item Description	Acceptable	Unacceptable	Observations/Corrective Actions To Be Completed	Date Action Completed
15	Destruction Pot G3E-207: Signs: -Danger-Authorized Personnel Only -No Smoking or Open Flame -Emergency Contract				
16	Overfill/Spill Control Equipment				
17	Monitoring Equipment In Place (Content Level)				
18	Surrounding Area & Unit Integrity				
19	Condition Of Secondary Containment				
20	Safety Equipment				
21	All Components Have Boundary Markers (Chain, Rope, etc.)				
22	Emergency & Spill Response Equipment				
23	Manway/Fill Pipe Seals Unbroken				

Comments: _____

Distribution:

Facility Owner: Facility Owner reviews, signs, and distributes log to:
RCRA Operating Records

RCRA Operating Records Signature:	Date:

6989

HWMU 11
Tank Farm Sump

Surfac
Impoundm

Inspector's Name:	Badge #:	Date:	Time:
Facility Owner's Signature:		Date:	Time:

Item No.	Item Description	Acceptable	Unacceptable	Observations/Corrective Actions To Be Completed	Date Action Completed
1	Signs: Danger-Authorized Personnel Only				
2	Emergency & Prior to Entry Contact				
3	Boundary Markers (Chain)				
4	Sump Condition (Cracks, Leaks, Or Material In Sump)				
5	Sufficient Freeboard (2 feet minimum)				
6	Estimated Freeboard Level:_____ (Ft.)				
7	Area Condition				
8	Safety Equipment				
9	Evidence of Release				

ments: _____

Distribution:
Facility Owner: Facility Owner reviews, signs, and distributes log to:
RCRA Operating Records

RCRA Operating Records Signature:	Date:

e 8 3 3

HWMU 12
Wheelabrator (Bldg 66)

Inspector's Name:	Badge #:	Date:	Time:
Facility Owner's Signature:		Date:	Time:

Item No.	Item Description	Acceptable	Unacceptable	Observations/Corrective Actions To Be Completed	Date Action Completed
1	Signs: Danger-Authorized Personnel Only				
2	No Smoking or Open Flame				
3	Emergency & Prior to Entry Contact				
4	Boundary Markers (Chain)				
5	Unit Condition				
6	Visible Signs Of Material Release				
9	Safety Equipment				

Comments: _____

Distribution:

Facility Owner: Facility Owner reviews, signs, and distributes log to:
RCRA Operating Records

RCRA Operating Records Signature:	Date:

6989

HWMU 13
Wheelabrator Dust Collector (Bldg 66)

Inspector's Name:	Badge #:	Date:	Time:
Facility Owner's Signature:		Date:	Time:

Item No.	Item Description	Acceptable	Unacceptable	Observations/Corrective Actions To Be Completed	Date Action Completed
1	Signs: Danger-Authorized Personnel Only				
2	No Smoking or Open Flame				
3	Emergency & Prior to Entry Contact				
4	Boundary Markers (Chain)				
5	Unit Condition				
6	Visible Signs Of Material Release				
9	Safety Equipment				

Comments: _____

Distribution:

Facility Owner: Facility Owner reviews, signs, and distributes log to:
RCRA Operating Records

RCRA Operating Records Signature:	Date:

0888

HWMU 14
Box Furnace

Pre

Inspector's Name:	Badge #:	Date:	Time:
Facility Owner's Signature:		Date:	Time:

Item No.	Item Description	Acceptable	Unacceptable	Observations/Corrective Actions To Be Completed	Date Action Completed
1	Signs: Danger-Authorized Personnel Only				
2	No Smoking or Open Flame				
3	Emergency & Prior to Entry Contact				
4	Boundary Markers (Chain)				
5	Unit Condition				
6	Visible Signs Of Material Release				
7	Safety Equipment				
8	Spill Response Equipment				

Comments: _____

Distribution:

Facility Owner: Facility Owner reviews, signs, and distributes log to:
RCRA Operating Records

RCRA Operating Records Signature:	Date:

6989

HWMU 15
Oxidation Furnace #1

P

Inspector's Name:	Badge #:	Date:	Time:
Facility Owner's Signature:		Date:	Time:

Item No.	Item Description	Acceptable	Unacceptable	Observations/Corrective Actions To Be Completed	Date Actio Complete
1	Signs: Danger-Authorized Personnel Only				
2	No Smoking or Open Flame				
3	Emergency & Prior to Entry Contact				
4	Boundary Markers (Chain)				
5	Unit Condition				
6	Visible Signs Of Material Release				
7	Safety Equipment				
8	Spill Response Equipment				

Comments: _____

Distribution:

Facility Owner: Facility Owner reviews, signs, and distributes log to:

RCRA Operating Records

RCRA Operating Records Signature:	Date:

0800

HWMU 16
Primary Calciner

Pro
Ur

Inspector's Name:	Badge #:	Date:	Time:
Facility Owner's Signature:		Date:	Time:

Item No.	Item Description	Acceptable	Unacceptable	Observations/Corrective Actions To Be Completed	Date Action Completed
1	Signs: Danger-Authorized Personnel Only				
2	No Smoking or Open Flame				
3	Emergency & Prior to Entry Contact				
4	Boundary Markers (Chain)				
5	Unit Condition				
6	Visible Signs Of Material Release				
7	Safety Equipment				
8	Spill Response Equipment				

Comments: _____

Distribution:

Facility Owner: Facility Owner reviews, signs, and distributes log to:
RCRA Operating Records

RCRA Operating Records Signature:	Date:

HWMU 16
PRIMARY CALCINER
FORM 16

6989

HWMU 17
Plant 8 East Drum Storage Pad

Active
Container Storage

Inspector's Name:	Badge #:	Date:	Time:
Facility Owner's Signature:		Date:	Time:

Item No.	Item Description	Acceptable	Unacceptable	Observations/Corrective Actions To Be Completed	Date Acti Complete
1	Signs: Danger-Authorized Personnel Only				
2	No Smoking or Open Flame				
3	Emergency & Prior to Entry Contact				
4	Boundary Markers (Chain)				
5	Pad Condition				
6	Area Condition				
7	Safety Equipment				
8	Visible Signs Of Material Release				

Comments: _____

Distribution:
Facility Owner: Facility Owner reviews, signs, and distributes log to:
RCRA Operating Records

RCRA Operating Records Signature:	Date:

0048

0908

REMEDIATION SUPPORT OPERATIONS
TEMPORARY CHANGE NOTICE (TCN)

1

ONLY ONE TCN CHANGE PERMITTED PER DOCUMENT PAGE

(Sheet 1 of 2)

1. **NOTE: TCN not valid without Supervisor signature, Manager initials and Operator signature (when required).**

SUPERVISOR: A.W. Paletta EXT: 6798 SIGNATURE: (Signature on File)

OPERATOR: D. Billingsley EXT: 6798 SIGNATURE: Signature on File

DOCUMENT OWNER: G. Hazlewood SUPV. ORG.: WPM CHARGE NUMBER: 8ABB1

2. EFFECTIVE DATE OF CHANGE: 11-04-94

3. EXPIRATION DATE OF CHANGE: 05-04-95 ***NOTE: Maximum effective period six months.***

4. AFFECTED DOCUMENT NUMBER: SOP 20-C-616

5. AFFECTED PAGE NUMBER 39

6. DOCUMENT ISSUE DATE: 09-07-94 REVISION NUMBER: 0

7. CHANGE (Use additional sheets of paper if necessary):
Enter each item number and associated change separately.

1) The Title of HWMU 17 reads Pit 8 East Drum Storage Pad. It is revised to read Plant 8 East Drum Storage Pad as follows:

8. PROCEDURE ADMINISTRATION TCN ACTION REQUIRED (Check as Appropriate)

8a. ☐ EFFECTIVE PERIOD > 30 DAYS. DISTRIBUTE TCN AND INCORPORATE INTO AFFECTED DOCUMENT BEFORE TCN EXPIRES.

8b. ☐ EFFECTIVE PERIOD > 30 DAYS. DISTRIBUTE TCN BUT DO NOT INCORPORATE. ALLOW TCN TO EXPIRE.

8c. ☐ EFFECTIVE PERIOD < 30 DAYS. DO NOT DISTRIBUTE. ALLOW TCN TO EXPIRE.

6989

HWMU 17
Pit 8 East Drum Storage Pad

Active
Container Stor

Inspector's Name:	Badge #:	Date:	Time:
Facility Owner's Signature:		Date:	Time:

Item No.	Item Description	Acceptable	Unacceptable	Observations/Corrective Actions To Be Completed	Date Action Completed
1	Signs: Danger-Authorized Personnel Only				
2	No Smoking or Open Flame				
3	Emergency & Prior to Entry Contact				
4	Boundary Markers (Chain)				
5	Pad Condition				
6	Area Condition				
7	Safety Equipment				
8	Visible Signs Of Material Release				

Comments: _____

Distribution:

Facility Owner: Facility Owner reviews, signs, and distributes log to:
RCRA Operating Records

RCRA Operating Records Signature:	Date:

0888

HWMU 18
Pit 8 West Drum Storage Pad

Active
Container Stor

Inspector's Name:	Badge #:	Date:	Time:
Facility Owner's Signature:		Date:	Time:

Item No.	Item Description	Acceptable	Unacceptable	Observations/Corrective Actions To Be Completed	Date Action Completed
1	Signs: Danger-Authorized Personnel Only				
2	No Smoking or Open Flame				
3	Emergency & Prior to Entry Contact				
4	Boundary Markers (Chain, Rope, etc.)				
5	Pad Condition				
6	Area Condition				
7	Safety Equipment				
8	Visible Signs Of Material Release				

Comments: _____

Distribution:
Facility Owner: Facility Owner reviews, signs, and distributes log to:
RCRA Operating Records

RCRA Operating Records Signature:	Date:

REMEDIATION SUPPORT OPERATIONS
TEMPORARY CHANGE NOTICE (TCN)

1

ONLY ONE TCN CHANGE PERMITTED PER DOCUMENT PAGE

(Sheet 1 of 2)

1. **NOTE: TCN not valid without Supervisor signature, Manager initials and Operator signature (when required).**

SUPERVISOR: A.W. Paletta EXT: 6798 SIGNATURE: (Signature on File)

OPERATOR: D. Billingsley EXT: 6298 SIGNATURE: Signature on File

DOCUMENT OWNER: G. Hazlewood SUPV. ORG.: WPM CHARGE NUMBER: 8ABB1

2. EFFECTIVE DATE OF CHANGE: 11-16-94

3. EXPIRATION DATE OF CHANGE: 05-16-95 ***NOTE: Maximum effective period six months.***

4. AFFECTED DOCUMENT NUMBER: SOP 20-C-616

5. AFFECTED PAGE NUMBER 40

6. DOCUMENT ISSUE DATE: 09-07-94 REVISION NUMBER: 0

7. CHANGE (Use additional sheets of paper if necessary):
Enter each item number and associated change separately.

1) Title of HWMU 18 reads Pit 8 West Drum Storage Pad. The title shall read Plant 8 West Drum Storage Pad as follows:

8. PROCEDURE ADMINISTRATION TCN ACTION REQUIRED (Check as Appropriate)

8a. ☐ EFFECTIVE PERIOD > 30 DAYS. DISTRIBUTE TCN AND INCORPORATE INTO AFFECTED DOCUMENT BEFORE TCN EXPIRES.

8b. ☐ EFFECTIVE PERIOD > 30 DAYS. DISTRIBUTE TCN BUT DO NOT INCORPORATE. ALLOW TCN TO EXPIRE.

8c. ☐ EFFECTIVE PERIOD < 30 DAYS. DO NOT DISTRIBUTE. ALLOW TCN TO EXPIRE.

HWMU 18
Plant 8 West Drum Storage Pad

Active Container Sto

Inspector's Name:	Badge #:	Date:	Time:
Facility Owner's Signature:		Date:	Time:

Item No.	Item Description	Acceptable	Unacceptable	Observations/Corrective Actions To Be Completed	Date Action Complete
1	Signs: Danger-Authorized Personnel Only				
2	No Smoking or Open Flame				
3	Emergency & Prior to Entry Contact				
4	Boundary Markers (Chain, Rope, etc.)				
5	Pad Condition				
6	Area Condition				
7	Safety Equipment				
8	Visible Signs Of Material Release				

Comments: _____

Distribution:
Facility Owner: Facility Owner reviews, signs, and distributes log to:
RCRA Operating Records

RCRA Operating Records Signature:	Date:

6989

HWMU 19
CP Storage Warehouse (Bldg 56)

Activ
Container Sto

Inspector's Name:	Badge #:	Date:	Time:
Facility Owner's Signature:		Date:	Time:

Item No.	Item Description	Acceptable	Unacceptable	Observations/Corrective Actions To Be Completed	Date Action Completed
1	Signs: Danger-Authorized Personnel Only				
2	No Smoking or Open Flame				
3	Emergency & Prior to Entry Contact				
4	Building Condition				
5	Condition of Secondary Containment				
6	Emergency & Spill Response Equipment				
7	Compatibility Codes				
8	Container Management				
9	Conditions Of Drums (Evidence Of Leaks Or Spills)				

nments: _____

Distribution:

Facility Owner: Facility Owner reviews, signs, and distributes log to:
RCRA Operating Records

RCRA Operating Records Signature:	Date:

9889

HWMU 20
Plant 1 Pad

Active
Container

Inspector's Name:	Badge #:	Date:	Time:
Facility Owner's Signature:		Date:	Time:

Item No.	Item Description	Acceptable	Unacceptable	Observations/Corrective Actions To Be Completed	Date Action Completed
1	Signs: Danger-Authorized Personnel Only				
2	No Smoking or Open Flame				
3	Emergency & Prior to Entry Contact				
4	Building Condition				
5	Condition of Secondary Containment				
6	Emergency & Spill Response Equipment				
7	Compatibility Codes				
8	Container Management				
9	Conditions Of Drums (Evidence Of Leaks Or Spills)				
9	Boundary Markers (Chains, Rope, etc.)				

Comments: _____

Distribution:

Facility Owner: Facility Owner reviews, signs, and distributes log to:
RCRA Operating Records

RCRA Operating Records Signature:	Date:

HWMU 20
PLANT 1 PAD
FORM 20

000855

6989

Proces
(With T

HWMU 21
HILCO Oil Recovery System
(Sheet 1 of 2)

Inspector's Name:	Badge #:	Date:	Time:
Facility Owner's Signature:		Date:	Time:

Item No.	Item Description	Acceptable	Unacceptable	Observations/Corrective Actions To Be Completed	Date Action Completed
1	System (Diked Area) Signs: Danger-Authorized Personnel Only				
2	No Smoking or Open Flame				
3	Emergency & Prior to Entry Contact				
4	Tanks: Dirty & Clean Oil; East & West Dirty Sumps; 2 Heaters & 2 Vaporizers Overfill/Spill Control Equipment				
5	Corrosion Or Release Of Waste				
6	Tanks' Integrity (Corrosion/Damage)				

ments: _____

Distribution:

Facility Owner: Facility Owner reviews, signs, and distributes log to:
RCRA Operating Records

RCRA Operating Records Signature:	Date:

0388

HWMU 21
HILCO Oil Recovery System
(Sheet 2 of 2)

Proces
(With

Inspector's Name:	Badge #:	Date:	Time:
Facility Owner's Signature:		Date:	Time:

Item No.	Item Description	Acceptable	Unacceptable	Observations/Corrective Actions To Be Completed	Date Action Completed
7	**Filters: (2-Rough & 2-Polishing)** Corrosion Or Release Of Waste				
8	Filters' integrity (Corrosion/Damage)				
9	**Stokes & Booster Pumps (14)** Corrosion Or Release Of Waste				
10	Pumps'integrity (Corrosion/Damage)				
11	**Condition of Secondary Containment**				
12	**Emergency & Spill Response Equipment**				
13	**Boundary Markers (Chain, Rope, etc.)**				
14	**All Tank Fill Pipes/Manways Have Unbroken Seals**				

Comments: _____

Distribution:

Facility Owner: Facility Owner reviews, signs, and distributes log to:

RCRA Operating Records

RCRA Operating Records Signature:	Date:

6989

HWMU 22
Abandoned Sump West Of Pilot Plant

Inspector's Name:	Badge #:	Date:	Time:
Facility Owner's Signature:		Date:	Time:

Item No.	Item Description	Acceptable	Unacceptable	Observations/Corrective Actions To Be Completed	Date Action Completed
1	Signs: Danger-Authorized Personnel Only				
2	Emergency & Prior to Entry Contact				
3	Boundary Markers (Chain, Rope, etc.)				
4	Area Condition				

Comments: _____

ribution:
Facility Owner: Facility Owner reviews, signs, and distributes log to:
RCRA Operating Records

RCRA Operating Records Signature:	Date:

8989

HWMU 25
Plant 1 Storage Building (Bldg 67)

Inactive C

Inspector's Name:	Badge #:	Date:	Time:
Facility Owner's Signature:		Date:	Time:

Item No.	Item Description	Acceptable	Unacceptable	Observations/Corrective Actions To Be Completed	Date Actio Completed
1	Signs: Danger-Authorized Personnel Only				
2	No Smoking or Open Flame				
3	Emergency & Prior to Entry Contact				
4	Boundary Markers (Chain)				
5	Building Condition				
6	Safety Equipment				

Comments: _____

Distribution:

Facility Owner: Facility Owner reviews, signs, and distributes log to:
RCRA Operating Records

RCRA Operating Records Signature:	Date:

6989

HWMU 26
Detrex Still

Proc
Ur

Inspector's Name:	Badge #:	Date:	Time:
Facility Owner's Signature:		Date:	Time:

Item No.	Item Description	Acceptable	Unacceptable	Observations/Corrective Actions To Be Completed	Date Action Completed
1	Signs: Danger-Authorized Personnel Only				
2	No Smoking or Open Flame				
3	Emergency & Prior to Entry Contact				
4	Boundary Markers (Chain, Rope, etc.)				
5	Unit Condition				
6	Visible Signs of Material Release				
7	Safety Equipment				
8	Spill Response Equipment				

Comments: _____

Distribution:

Facility Owner: Facility Owner reviews, signs, and distributes log to:
RCRA Operating Records

RCRA Operating Records Signature:	Date:

0800

HWMU 27
Waste Pit No. 4

Inspector's Name:	Badge #:	Date:	Time:
Facility Owner's Signature:		Date:	Time:

Item No.	Item Description	Acceptable	Unacceptable	Observations/Corrective Actions To Be Completed	Date Action Completed
1	Signs: -Danger-Authorized Personnel Only -No Smoking or Open Flame				
2	Emergency & Prior to Entry Contact				
3	Boundary Markers (Chain)				
4	Condition of Soil at Edge of FML (soil erosion should not expose FML below grade)				
5	Condition of Anchor Trenches (FML should be securely anchored in trench)				
6	Condition of Field Seams (tears)				
7	Condition of Factory Seams (tears)				
8	Condition of FML Panels (holes)				
9	Condition of Hold-Down Pillows (secure)				

Comments: _____

Distribution:

Facility Owner: Facility Owner reviews, signs, and distributes log to:
RCRA Operating Records

RCRA Operating Records Signature:	Date:

6989

Process
(With T:

HWMU 28
Trane Thermal Liquid Incinerator

Inspector's Name:	Badge #:	Date:	Time:
Facility Owner's Signature:		Date:	Time:

Item No.	Item Description	Acceptable	Unacceptable	Observations/Corrective Actions To Be Completed	Date Action Completed
1	Signs: -Danger-Authorized Personnel Only				
2	No Smoking or Open Flame				
3	Emergency & Prior To Entry Contact				
4	Boundary Markers (Chain, Rope, etc.)				
5	Area Condition (Evidence of Leaks)				
6	Bldg. 39A Condition				
7	Tank F3E-406: Overfill/Spill Control Equipment				
8	Secondary Containment Condition				
	Tank Condition or Release Of Waste				
10	Manway Seal				
11	Monitoring Equipment				
12	Safety Equipment				

Comments: _____

Distribution:

Facility Owner: Facility Owner reviews, signs, and distributes log to:
RCRA Operating Records

RCRA Operating Records Signature:	Date:

000863

HWMU 29
Plant 8 Warehouse (Bldg 80)

Active
Contains

Inspector's Name:	Badge #:	Date:	Time:
Facility Owner's Signature:		Date:	Time:

Item No.	Item Description	Acceptable	Unacceptable	Observations/Corrective Actions To Be Completed	Date Action Completed
1	Signs: -Danger-Authorized Personnel Only				
2	No Smoking or Open Flame				
3	Emergency & Prior To Entry Contact				
4	Building Condition				
5	Condition of Secondary Containment				
6	Emergency & Spill Response Equipment				
7	Compatibility Codes				
8	Container Management				
9	Conditions of Drums (Evidence of Leaks/Spills)				

Comments: _____

Distribution:

Facility Owner: Facility Owner reviews, signs, and distributes log to:
RCRA Operating Records

RCRA Operating Records Signature:	Date:

6989

RCR
Storage

HWMU 31
Tank T-5 (Solvent, Bulk Storage)

Inspector's Name:	Badge #:	Date:	Time:
Facility Owner's Signature:		Date:	Time:

Item No.	Item Description	Acceptable	Unacceptable	Observations/Corrective Actions To Be Completed	Date Action Completed
1	Signs: -Danger-Authorized Personnel Only				
2	No Smoking or Open Flame				
3	Emergency & Prior To Entry Contact				
4	Overfill/Spill Control Equipment				
5	Corrosion Or Release Of Waste				
6	Surrounding Area and Unit Integrity				
7	Secondary Containment Condition				
8	Safety Equipment				
9	Manway Seal Unbroken				
	Boundary Markers (Chains)				

...ments: _____

Distribution:
Facility Owner: Facility Owner reviews, signs, and distributes log to:
RCRA Operating Records

RCRA Operating Records Signature:	Date:

0880

HWMU 32
Tank T-6 (Solvent, Bulk Storage)

RCRA
Storage T

Inspector's Name:	Badge #:	Date:	Time:
Facility Owner's Signature:		Date:	Time:

Item No.	Item Description	Acceptable	Unacceptable	Observations/Corrective Actions To Be Completed	Date Action Completed
1	Signs: -Danger-Authorized Personnel Only				
2	No Smoking or Open Flame				
3	Emergency & Prior To Entry Contact				
4	Overfill/Spill Control Equipment				
5	Corrosion Or Release Of Waste				
6	Surrounding Area and Unit Integrity				
7	Secondary Containment Condition				
8	Safety Equipment				
9	Manway Seal Unbroken				
10	Boundary Markers (Chains)				

Comments: _____

Distribution:
Facility Owner: Facility Owner reviews, signs, and distributes log to:
RCRA Operating Records

RCRA Operating Records Signature:	Date:

6989

HWMU 33
Pilot Plant Warehouse (Bldg 68)

A
Container

Inspector's Name:	Badge #:	Date:	Time:
Facility Owner's Signature:		Date:	Time:

Item No.	Item Description	Acceptable	Unacceptable	Observations/Corrective Actions To Be Completed	Date Action Completed
1	Signs: -Danger-Authorized Personnel Only				
2	No Smoking or Open Flame				
3	Emergency & Prior To Entry Contact				
4	Building Condition				
5	Condition Of Secondary Containment				
6	Emergency & Spill Response Equipment				
7	Compatibility Codes				
8	Container Management				
9	Conditions of Drums (Evidence Of Leaks/Spills)				

mments: _____

Distribution:

Facility Owner: Facility Owner reviews, signs, and distributes log to:
RCRA Operating Records

RCRA Operating Records Signature:	Date:

2899

HWMU 34
KC-2 Warehouse (Bldg 63)

A
Contain-

Inspector's Name:	Badge #:	Date:	Time:
:cility Owner's Signature:		Date:	Time:

Item No.	Item Description	Acceptable	Unacceptable	Observations/Corrective Actions To Be Completed	Date Action Completed
1	Signs: -Danger-Authorized Personnel Only				
2	No Smoking or Open Flame				
3	Emergency & Prior To Entry Contact				
4	Building Condition				
5	Condition Of Secondary Containment				
6	Emergency & Spill Response Equipment				
7	Compatibility Codes				
8	Container Management				
9	Conditions of Drums (Evidence Of Leaks/Spills)				
10	Safety Equipment				

Comments: _____

Distribution:
Facility Owner: Facility Owner reviews, signs, and distributes log to:
RCRA Operating Records

RCRA Operating Records Signature:	Date:

6989

HWMU 35
Plant 9 Warehouse (Bldg 81)

Acti
Container Sto

Inspector's Name:	Badge #:	Date:	Time:
Facility Owner's Signature:		Date:	Time:

Item No.	Item Description	Acceptable	Unacceptable	Observations/Corrective Actions To Be Completed	Date Action Completed
1	Signs: -Danger-Authorized Personnel Only				
2	No Smoking or Open Flame				
3	Emergency & Prior To Entry Contact				
4	Building Condition				
5	Condition Of Secondary Containment				
6	Emergency & Spill Response Equipment				
7	Compatibility Codes				
8	Container Management				
9	Conditions of Drums (Evidence Of Leaks/Spills)				

ments: _____

Distribution:

Facility Owner: Facility Owner reviews, signs, and distributes log to:
RCRA Operating Records

RCRA Operating Records Signature:	Date:

0809

HWMU 36
Storage Pad North of Plant 6

Inactive
Contai

Inspector's Name:	Badge #:	Date:	Time:
Facility Owner's Signature:		Date:	Time:

Item No.	Item Description	Acceptable	Unacceptable	Observations/Corrective Actions To Be Completed	Date Action Completed
1	Signs: -Danger-Authorized Personnel Only				
2	Emergency & Prior To Entry Contact				
3	Boundary Markers (Chain)				
4	Area Condition				

Comm :

Distribution:

Facility Owner: Facility Owner reviews, signs, and distributes log to:
RCRA Operating Records

RCRA Operating Records Signature:	Date:

6989

HWMU 37
Plant 6 Warehouse (Bldg 79)

Acti
Container Sto

Inspector's Name:	Badge #:	Date:	Time:
Facility Owner's Signature:		Date:	Time:

Item No.	Item Description	Acceptable	Unacceptable	Observations/Corrective Actions To Be Completed	Date Action Completed
1	Signs: -Danger-Authorized Personnel Only				
2	No Smoking or Open Flame				
3	Emergency & Prior To Entry Contact				
4	Building Condition				
5	Condition Of Secondary Containment				
6	Spill Response Equipment				
7	Compatibility Codes				
8	Container Management				
9	Conditions of Drums (Evidence Of Leaks/Spills)				
0	Safety Equipment				

Comments: _____

Distribution:

Facility Owner: Facility Owner reviews, signs, and distributes log to:
RCRA Operating Records

RCRA Operating Records Signature:	Date:

6883

HWMU 38
HF Tank Car Area

Inacti
Cont

Inspector's Name:	Badge #:	Date:	Time:
Facility Owner's Signature:		Date:	Time:

Item No.	Item Description	Acceptable	Unacceptable	Observations/Corrective Actions To Be Completed	Date Action Completed
1	Signs: -Danger-Authorized Personnel Only				
2	Emergency & Prior To Entry Contact				
3	Boundary Markers (Chain)				
4	Area Condition				

Comments: _____

Distribution:

Facility Owner: Facility Owner reviews, signs, and distributes log to:

RCRA Operating Records

RCRA Operating Records Signature:	Date:

0203

REMEDIATION SUPPORT OPERATIONS
TEMPORARY CHANGE NOTICE (TCN)

ONLY ONE TCN CHANGE PERMITTED PER DOCUMENT PAGE

1. **NOTE: TCN not valid without Supervisor signature, Manager initials and Operator signature (when required).**

SUPERVISOR: Matt Harper EXT: 6560 SIGNATURE: (Signature on File)

OPERATOR: Todd Craig EXT: 6346 SIGNATURE: (Signature on File)

DOCUMENT OWNER: G. Hazlewood SUPV. ORG.: WPM CHARGE NUMBER: 8ABB1

2. EFFECTIVE DATE OF CHANGE: 04-10-95

3. EXPIRATION DATE OF CHANGE: 07-01-95 ***NOTE: Maximum effective period six months.***

4. AFFECTED DOCUMENT NUMBER: 20-C-616

5. AFFECTED PAGE NUMBER 59

6. DOCUMENT ISSUE DATE: 09-07-94 REVISION NUMBER: 0

Enter each item number and associated change separately.

1) HWMU 40 Bio-Surge Lagoon inspection form is to be DELETED.

8. PROCEDURE ADMINISTRATION TCN ACTION REQUIRED (Check as Appropriate)

8a. ☐ EFFECTIVE PERIOD > 30 DAYS. DISTRIBUTE TCN AND INCORPORATE INTO AFFECTED DOCUMENT BEFORE TCN EXPIRES.

8b. ☐ EFFECTIVE PERIOD > 30 DAYS. DISTRIBUTE TCN BUT DO NOT INCORPORATE. ALL TCN TO EXPIRE.

8c. ☐ EFFECTIVE PERIOD < 30 DAYS. DO NOT DISTRIBUTE. ALLOW TCN TO EXPIRE.

6989

HWMU 40
Bio-Surge Lagoon

Sur
Impound

Inspector's Name:	Badge #:	Date:	Time:
Facility Owner's Signature:		Date:	Time:

Item No.	Item Description	Acceptable	Unacceptable	Observations/Corrective Actions To Be Completed	Date Action Completed
1	Signs: -Danger-Authorized Personnel Only -No Smoking or Open Flame				
2	Emergency & Prior To Entry Contact				
3	Boundary Markers (Chain)				
4	Unit Condition (Dike/Liner)				
5	Sufficient Freeboard (2 Ft. Minimum)				
6	Estimated Freeboard Level:				0
7	No Sudden Drops In Level Of Contents				
8	Area Condition				
	Safety Equipment				
10	Visual Evidence Of Material Release				

Comments: _____

Distribution:

Facility Owner: Facility Owner reviews, signs, and distributes log to:
RCRA Operating Records

RCRA Operating Records Signature:	Date:

0880

HWMU 41
Sludge Drying Beds

Inspector's Name:	Badge #:	Date:	Time:
Facility Owner's Signature:		Date:	Time:

Item No.	Item Description	Acceptable	Unacceptable	Observations/Corrective Actions To Be Completed	Date Action Completed
1	Signs: -Danger-Authorized Personnel Only				
2	Emergency & Prior To Entry Contact				
3	Boundary Markers (Chain, Rope, etc.)				
4	Unit Condition (Dike/Liner)				
5	Sufficient Freeboard (2 Ft. Minimum)				
6	Estimated Freeboard Level: _____ (1				
7	No Sudden Drops In Level Of Contents				
8	Area Condition				
9	Safety Equipment				
10	Visual Evidence Of Material Release				

Comments: _____

Distribution:
Facility Owner: Facility Owner reviews, signs, and distributes log to:
RCRA Operating Records

RCRA Operating Records Signature:	Date:

6989

HWMU 42
Waste Pit No. 5

Surf
Impound

Inspector's Name:	Badge #:	Date:	Time:
Facility Owner's Signature:		Date:	Time:

Item No.	Item Description	Acceptable	Unacceptable	Observations/Corrective Actions To Be Completed	Date Action Completed
1	Signs -Danger-Authorized Personnel Only -No Smoking or Open Flame				
2.	Emergency & Prior To Entry, Contact				
3	Boundary Markers (Chain)				
4	Unit Condition (Dike/Liner)				
5	Sufficient Freeboard (2 FL. Minimum)				
6	No Sudden Drops In Level Of Contents				
7	Area Condition				
8	Safety Equipment				
9	Visual Evidence Of Material Release				
10	Estimated Freeboard Level	Feet: _____	Inches: _____		
11	Slurry Tank For MAWS System: Corrosion or Release Of Waste				
	Monitoring Equipment In Place (content level)				
13	Secondary Containment Condition				
14	Manway/Flipipe Seals Unbroken				
15	Emergency and Spill Response Equipment				

Comments: _____

NOTE: Items 1 through 9 - Weekly inspection required
Items 10 through 15 - Daily inspection required

Distribution:
Facility Owner: Facility Owner reviews, signs, and distributes log to:
RCRA Operating Records

RCRA Operating Records Signature:	Date:

HWMU 42
WASTE PIT NO. 5
FORM 42

HWMU 46
UNH Tanks (NFS Storage Area)
(Tanks F2-605, 606, 608, 02-E004A-Tnk)

Inspector's Name:	Badge #:	Date:	Time:
Facility Owner's Signature:		Date:	Time:

Item No.	Item Description	Acceptable	Unacceptable	Observations/Corrective Actions To Be Completed	Date Action Completed
1	Signs: -Danger-Authorized Personnel Only				
2	-No Smoking or Open Flame				
3	Emergency & Prior To Entry Contact				
4	Overfill/Spill Control Equipment				
5	Corrosion Or Release Of Waste				
6	Monitoring Equip. In Place (Content Level)				
7	Surrounding Area And Unit Integrity				
8	Secondary Containment Condition				
9	Safety Equipment				
10	Manway Seal Unbroken				
11	Boundary Markers (Chains)				

Comments: _____

Distribution:
Facility Owner: Facility Owner reviews, signs, and distributes log to:
RCRA Operating Records

RCRA Operating Records Signature:	Date:

0041

6989

REMEDIATION SUPPORT OPERATIONS
TEMPORARY CHANGE NOTICE (TCN)

ONLY ONE TCN CHANGE PERMITTED PER DOCUMENT PAGE

(Sheet 1 of 2)

1. **NOTE: TCN not valid without Supervisor signature, Manager initials and Operator signature (when required).**

SUPERVISOR: A.W. Paletta EXT: 6798 SIGNATURE: (Signature on File)

OPERATOR: J. Sexton EXT: 6798 SIGNATURE: Signature on File

DOCUMENT OWNER: G. Hazlewood SUPV. ORG.: WPM CHARGE NUMBER: 8ABN1

2. EFFECTIVE DATE OF CHANGE: 11-04-94

3. EXPIRATION DATE OF CHANGE: 05-04-95 ***NOTE: Maximum effective period six months.***

4. AFFECTED DOCUMENT NUMBER: SOP 20-C-616

5. AFFECTED PAGE NUMBER 62

6. DOCUMENT ISSUE DATE: 09-07-94 REVISION NUMBER: 0

7. CHANGE (Use additional sheets of paper if necessary):
Enter each item number and associated change separately.

1) The Heading of HWMU 46 is revised to add Tank F2-607 as follows:

8. PROCEDURE ADMINISTRATION TCN ACTION REQUIRED (Check as Appropriate)

8a. ☑ EFFECTIVE PERIOD > 30 DAYS. DISTRIBUTE TCN AND INCORPORATE INTO AFFECTED DOCUMENT BEFORE TCN EXPIRES.

8b. ☐ EFFECTIVE PERIOD > 30 DAYS. DISTRIBUTE TCN BUT DO NOT INCORPORATE. ALLOW TCN TO EXPIRE.

8c. ☐ EFFECTIVE PERIOD < 30 DAYS. DO NOT DISTRIBUTE. ALLOW TCN TO EXPIRE.

HWMU 46
UNH TANKS (NFS Storage Area)
(Tanks F2-605, 606, 607, 608, 02-E004A-Tnk)

Inspector's Name:	Badge #:	Date:	Time:
Facility Owner's Signature:		Date:	Time:

Item No.	Item Description	Acceptable	Unacceptable	Observations/Corrective Actions To Be Completed	Date Action Completed
1	Signs: -Danger-Authorized Personnel Only				
2	-No Smoking or Open Flame				
3	Emergency & Prior To Entry Contact				
4	Overfill/Spill Control Equipment				
5	Corrosion Or Release Of Waste				
6	Monitoring Equip. In Place (Content Level)				
7	Surrounding Area And Unit Integrity				
8	Secondary Containment Condition				
9	Safety Equipment				
10	Manway Seal Unbroken				
11	Boundary Markers (Chains)				

Comments: _____

Distribution:
Facility Owner: Facility Owner reviews, signs, and distributes log to:
RCRA Operating Records

RCRA Operating Records Signature:	Date:

6989

RCRA
Storage

HWMU 47
UNH Tanks (North of Pit 2)
(Tanks F2E-5, F2E-6, & F2E-8)

Inspector's Name:	Badge #:	Date:	Time:
Facility Owner's Signature:		Date:	Time:

Item No.	Item Description	Acceptable	Unacceptable	Observations/Corrective Actions To Be Completed	Date Action Completed
1	Signs: -Danger-Authorized Personnel Only				
2	-No Smoking or Open Flame				
3	Emergency & Prior To Entry Contact				
4	Overfill/Spill Control Equipment				
5	Corrosion Or Release Of Waste				
6	Monitoring Equip. In Place (Content Level)				
7	Surrounding Area And Unit Integrity				
8	Secondary Containment Condition				
	Safety Equipment				
10	Manway Seal Unbroken				
11	Boundary Markers (Chains)				

Comments: _____

Distribution:

Facility Owner: Facility Owner reviews, signs, and distributes log to:
RCRA Operating Records

RCRA Operating Records Signature:	Date:

0888

HWMU 48
UNH Tanks (S.E. Of Plt 2)
(Tanks F3E-223)

RCRA

Inspector's Name:	Badge #:	Date:	Time:
Facility Owner's Signature:		Date:	Time:

Item No.	Item Description	Acceptable	Unacceptable	Observations/Corrective Actions To Be Completed	Date Action Completed
1	Signs: -Danger-Authorized Personnel Only				
2	-No Smoking or Open Flame				
3	Emergency & Prior To Entry Contact				
4	Overfill/Spill Control Equipment				
5	Corrosion Or Release Of Waste				
6	Monitoring Equip. In Place (Content Level)				
7	Surrounding Area And Unit Integrity				
8	Secondary Containment Condition				
9	Safety Equipment				
10	Manway Seal Unbroken				
11	Boundary Markers (Chains)				

Comments: _____

Distribution:

Facility Owner: Facility Owner reviews, signs, and distributes log to:
RCRA Operating Records

RCRA Operating Records Signature:	Date:

6989

HWMU 49
UNH Tanks (Digestion Area, 2 Locations)
(Tanks D1-1,2,4,7,10 F1-1,25,26)

RCR
Storage

Inspector's Name:	Badge #:	Date:	Time:
Facility Owner's Signature:		Date:	Time:

Item No.	Item Description	Acceptable	Unacceptable	Observations/Corrective Actions To Be Completed	Date Action Completed
1	Signs: -Danger-Authorized Personnel Only				
2	-No Smoking or Open Flame				
3	Emergency & Prior To Entry Contact				
4	Overfill/Spill Control Equipment				
5	Corrosion Or Release Of Waste				
6	Monitoring Equip. In Place (Content Level)				
7	Surrounding Area And Unit Integrity				
8	Secondary Containment Condition				
	Safety Equipment				
10	Manway Seal Unbroken				
11	Boundary Markers (Chains)				

Comments: _____

Distribution:

Facility Owner: Facility Owner reviews, signs, and distributes log to:
RCRA Operating Records

RCRA Operating Records Signature:	Date:

0880

RCRA

HWMU 50
UNH Tanks (Raffinate Bldg, 2 Locations)
(Tanks F1-301, 302, 303 & 308)

Inspector's Name:	Badge #:	Date:	Time:
Facility Owner's Signature:		Date:	Time:

Item No.	Item Description	Acceptable	Unacceptable	Observations/Corrective Actions To Be Completed	Date Action Completed
1	Signs: -Danger-Authorized Personnel Only				
2	-No Smoking or Open Flame				
3	Emergency & Prior To Entry Contact				
4	Overfill/Spill Control Equipment				
5	Corrosion Or Release Of Waste				
6	Monitoring Equip. In Place (Content Level)				
7	Surrounding Area And Unit Integrity				
8	Secondary Containment Condition				
9	Safety Equipment				
10	Manway Seal Unbroken				
11	Boundary Markers (Chains)				

Comments: _____

Distribution:

Facility Owner: Facility Owner reviews, signs, and distributes log to:
RCRA Operating Records

RCRA Operating Records Signature:	Date:

6989

HWMU 51
Experimental Treatment Facility (ETF)

In Container:

Inspector's Name:	Badge #:	Date:	Time:
Facility Owner's Signature:		Date:	Time:

Item No.	Item Description	Acceptable	Unacceptable	Observations/Corrective Actions To Be Completed	Date Action Completed
1	Signs: -Danger-Authorized Personnel Only				
2	Emergency & Prior To Entry Contact				
3	Boundary Markers (Chain, Rope, etc.)				
4	Unit Condition				

Comments: _____

Distribution:

Facility Owner: Facility Owner reviews, signs, and distributes log to:
RCRA Operating Records

RCRA Operating Records Signature:	Date:

8383

HWMU 52
North & South Solvent Tanks (P. Pit)

RCR

Inspector's Name:	Badge #:	Date:	Time:
Facility Owner's Signature:		Date:	Time:

Item No.	Item Description	Acceptable	Unacceptable	Observations/Corrective Actions To Be Completed	Date Action Completed
1	**Signs:** -Danger-Authorized Personnel Only				
2	-No Smoking or Open Flame				
3	Emergency & Prior To Entry Contact				
4	Overfill/Spill Control Equipment				
5	Corrosion Or Release Of Waste				
6	Surrounding Area And Unit Integrity				
7	Secondary Containment Condition				
8	Safety Equipment				
9	Manway Seal Unbroken				
10	Boundary Markers (Chains)				

Comments: _____

Distribution:

Facility Owner: Facility Owner reviews, signs, and distributes log to:
RCRA Operating Records

RCRA Operating Records Signature:	Date:

6989

Sum

HWMU 53
Safe Geometry Digestion Sump

Inspector's Name:	Badge #:	Date:	Time:
Facility Owner's Signature:		Date:	Time:

Item No.	Item Description	Acceptable	Unacceptable	Observations/Corrective Actions To Be Completed	Date Action Completed
1	Signs: -Danger-Authorized Personnel Only				
2	-No Smoking or Open Flame				
3	Emergency & Prior To Entry Contact				
4	Boundary Markers (Chain, Rope, etc.)				
5	Sump Condition (Cracks, Leaks, Or Material In Sump)				
6	Area Condition (Dead Vegetation/Signs of A Release)				
7	Safety Equipment				
8	Ancillary Equipment (Tanks & Pumps) Release of Waste				
9	Monitoring Equipment Content Level				
10	Manway/Fill Pipe Seals Unbroken				
11	Condition of Secondary Containment				

Comments: _____

Distribution:

Facility Owner: Facility Owner reviews, signs, and distributes log to:
RCRA Operating Records

RCRA Operating Records Signature:	Date:

0880

HWMU 54
Thorium Nitrate Tank T2

Inspector's Name:	Badge #:	Date:	Time:
Facility Owner's Signature:		Date:	Time:

Item No.	Item Description	Acceptable	Unacceptable	Observations/Corrective Actions To Be Completed	Date Action Completed
1	Signs: • Danger-Authorized Personnel Only • No Smoking, Open Flame • Facility Owner and Emergency Information				
2	Boundary Markers (Chain)				
3	Condition of Area				
4	Safety Equipment				
5	Secondary Containment Condition				
6	Emergency and Spill Response Equipment				
7	Evidence of Corrosion, Leakage or Release of Waste				
8	Manway/Fillpipe Seal Unbroken				

Comments: _____

Distribution:
Facility Owner: Facility Owner reviews, signs, and distributes log to:
RCRA Operating Records

RCRA Operating Records Signature:	Date:

6989

HWMU Surface Impoundment
Daily Freeboard Inspection Log

Inspector's Name:	Badge #:	Date:	Time:
Facility Owner's Signature:		Date:	Time:

HWMU No.	HWMU Location	Time	Freeboard Level (Feet/Inches)	Acceptable	Corrective Actions To Completed
40	Bio-Surge Lagoon				
41	Sludge Drying Beds				
42	Waste Pit 5 Slurry Tank For MAWS System: • Corrosion or Release of Waste • Monitoring Equipment In Place (Content Level) • Secondary Containment Condition • Manway/Fillpipe Seals Unbroken				

Comments: _____

Distribution:
Facility Owner: Facility Owner reviews, signs, and distributes log to:
RCRA Operating Records

RCRA Operating Records Signature:	Date:

0888

FEMP
RCRA WAREHOUSE - BUILDING ____ OPERATION EQUIPMENT LOG
(Sheet 1 of 2)

Inspector's Name:	Badge #:	Date:	Time:
Facility Owner's Signature:		Date:	Time:

Item No.	Item Description	Acceptable	Unacceptable	Observations/Corrective Actions To Be Completed	Date Action Completed
1	Procedures Available For All Equipment Used and Processes Conducted in RCRA Warehouse				
2	All PM Inspections Conducted Per Applicable Procedure				
3	Scales: Daily PM Inspection Conducted				
4	Current Calibration Sticker Present				
5	Platform Guard in Place				
6	Printer Operational				
7	Check Weights Serviceable (Have Current PM Date)				
8	Forklrucks: Daily PM Inspection Conducted				
9	Form FMPC-OPR-2414 Completed				
10	Current PM Card Present				
11	Hoist, Cranes: Daily PM Inspection Conducted				
12	Form FMPC-H&S-2423 Completed				
13	Current PM Tag Present				
14	Equipment Weight Capacity Not Exceeded By Load Weight				

Comments: _____

Distribution:
Facility Owner: Facility Owner reviews, signs, and distributes log to:
RCRA Operating Records

RCRA Operating Records Signature:	Date:

6989

FEMP
RCRA WAREHOUSE - BUILDING _____ OPERATION EQUIPMENT LOG
(Sheet 2 of 2)

Inspector's Name:	Badge #:	Date:	Time:
Facility Owner's Signature:		Date:	Time:

Item No.	Item Description	Acceptable	Unacceptable	Observations/Corrective Actions To Be Completed	Date Action Completed
15	**Hand Stacker/Pallet Jack:** Daily PM Inspection Conducted				
16	Form FMPC-SAML-2415 Completed				
17	Current PM Tag Present				
18	**Drum Lift & UHLD:** Current PM Tag Present				
19	Daily PM Inspection Conducted (Damaged/Missing Hardware)				
20	**Flammable Liquid Cabinets:** Positioned On Level Surface				
21	Vent Port Capped (Unless Using A Vent Fan Adapter)				
	Cabinet Properly Grounded				
23	No Combustible Materials Stored In/Around Cabinets				

Comments: _____

Distribution:

Facility Owner: Facility Owner reviews, signs, and distributes log to:
RCRA Operating Records

RCRA Operating Records Signature:	Date:

RECORD OF ISSUE/REVISIONS

DATE	REV. NO.	DESCRIPTION AND AUTHORITY
11-28-90	0	Procedure required for inspecting RCRA storage units per Request No. P90-280, initiated by K. Nuhfer.
02-12-91	1	Revised to clearly identify titles of the inspection form per Request No. P91-026, initiated by J. Ogg.
09-17-91	0	Reissued to inspect HWMUs in service and out of service per Request No. P91-278, initiated by J. Carr.
05-28-92	0	Reissued to update current operations per Request No. P92-125, initiated by T. Parmer.
12-15-92	0	Reissued to incorporate new forms and update HWMUs per Request No. P92-179, initiated by T. Parmer.
02-07-93	1	Revised to incorporate CIO C92-124 per Request No. P92-247, CIO C92-129 per Request No. P92-310, and update to conform with Procedure Program requirements.
09-16-93	2	Revised to incorporate CIO C93-004 per Request No. P93-1034.
04-05-94	3	Revised to incorporate CIO C93-753 per Request P94-0246.
09-07-94	0	Reissue of document to update to current requirements per Request No. P94-0399, initiated by J. Baarlaer. The document format does not conform to current RSO SOP format per PO-D-026, format changed at the request of 20-C-616 document owner.

NON-CONTROLLED COPY

TABLE OF CONTENTS

1.0 PURPOSE 2

2.0 SCOPE 2

3.0 APPLICABLE DOCUMENTS 2
- 3.1 Source Documents 2
- 3.2 Reference Documents 2

4.0 DEFINITIONS 3

5.0 RESPONSIBILITIES 4

6.0 GENERAL 5

7.0 HEALTH AND SAFETY REQUIREMENTS 5

8.0 PROCEDURE 7
- 8.1 Inspecting Containers of Hazardous Waste Received at Storage Areas 7
- 8.2 Placing Inspected Containers in Storage 9

RECORD OF ISSUE/REVISIONS 23

LIST OF TABLES

Table 1, Container Inspection Categories 11
Table 2, Pallet Drum Capacity and Stacking Limits 12
Table 3, Hazardous Waste Reactivity Group Codes 13
Table 4, Hazardous Waste Storage Compatibility Chart 16
Table 5, NFPA 30 17

LIST OF FIGURES

Figure 1, Diagram of Hazardous Waste Drum Labels/Markings for Storage in RCRA 18
Figure 2, Diagram of Hazardous Waste Drum Labels/Markings for Storage in RCRA Warehouses (BUNG DRUM) 19
Figure 3, Diagram of White Metal Box Labels/Markings 20
Figure 4, NM-Transfer/Receipt/Identification Record (68/69/XX Card) 21

LIST OF ATTACHMENTS

Attachment A, FEMP Hazardous Waste Container Pre-Storage Check List 22

1.0 **PURPOSE**

1.1 The purpose of this document is to provide the procedure for inspecting containers of hazardous/mixed/PCB/asbestos waste received at RCRA storage facilities and storing the waste material.

2.0 **SCOPE**

2.1 This procedure is applicable to designated Hazardous Waste Storage Areas in the KC-2 Warehouse, Building 56, 68, 79, 80, and 81, Plant 1 Pad including any Tension Support Structures or Storage Lockers which contain Hazardous/Mixed/PCB/Asbestos Waste.

3.0 **APPLICABLE DOCUMENTS**

3.1 Source Documents

3.1.1 40 CFR 264 Series, "Standards for Owners and Operators of Hazardous Waste Treatment, Storage, and Disposal Facilities.

3.1.2 40 CFR 761 Series, "Polychlorinated Biphenyls (PCBs) Manufacturing, Processing Distribution in Commerce, and Use Prohibitions"

3.1.3 49 CFR 171-173 Series, "Hazardous Materials Regulations, Department of Transportation"

3.1.4 OAC 3745-54 Series, "Standards for the Management of Hazardous Waste"

3.1.5 OAC 3745-65 Series, "Interim Standards for Hazardous Waste Facilities"

3.1.6 DOE 5400 Series, "Environment Safety and Health (Directives)"

3.1.7 D10-00-020, "Remediation Support Operations Division Document System"

3.1.8 RCRA Part B Operating Permit

3.2 Reference Documents

3.2.1 20-C-600, "Overpacking Defective Containers"

3.2.2 20-C-606, "Hazardous Material Spill Clean-Up"

3.2.3 20-C-615, "Handling Uncharacterized Waste in the Controlled Holding Area"

3.2.4 20-C-616, "Inspection of Hazardous Waste Management Units"

3.2.5 SSOP-0035, "Satellite Accumulation Areas for Hazardous Waste"

3.2.6 SSOP-1027, "Managing PCBs and PCB Items"

3.2.7 SSOP-0008, "Preparing and Transferring Uncharacterized Waste to the Controlled Holding Area"

3.2.8 20-C-017, "Movement of Hazardous/Mixed Waste"

4.0 DEFINITIONS

4.1 Asbestos Waste - A toxic substance regulated by TSCA which contains asbestos.

4.2 Bulge - A swollen area, convex distortion, or an outward bend.

4.3 Compatible Container - A drum safety can, or white metal box that is acceptable for storage of the material contained.

4.4 Dent - A crease, depression, or hollow made by blow or pressure, or a concave distortion.

4.5 FEMP Lot Marking and Color Coding System - A 15 digit alpha-numeric code and a color code to identify containers of nuclear materials, low-level waste, and hazardous/mixed waste etc.

4.6 Hazardous Waste - A discarded waste material listed in 40 CFR Part 261 or fails the TCLP Test, or exhibits characteristics of ignitability, corrosivity or reactivity.

4.7 Hole - An opening that penetrates the container, including breach, gouge, puncture, or leak.

4.8 Non-Sparking Tool - A tool constructed of a material that will not cause a spark if dropped or struck.

4.9 Polychlorinated Biphenyl (PCB) - Toxic substance regulated by TSCA (includes dielectric fluids) containing PCBs or contaminated with a PCB concentration of 50 parts per million or above.

4.10 Rain Cap - Plastic cover placed on top of drums to keep them clear.

4.11 Reactivity Group Code (RGC) - A hazardous waste identification system that ensure that no incompatible materials are accumulated/stored adjacently.

4.12 Resource Conservation and Recovery Act (RCRA) - The Congressional Act which established safe and environmentally acceptable "cradle to grave" management practices for specific hazardous wastes.

4.13 Satellite Accumulation Area - A defined area approved for waste accumulation, at or near the waste generation point, which is under control of the Supervisor managing the operation generating the waste.

4.14 Spill - Any unplanned event that allows hazardous waste to enter the ground, water, or the air within or beyond the boundaries of the FEMP.

4.15 Spill Accumulation Container (SAC) - A portable polyethylene container that provides secondary containment for one 55-gallon drum or smaller container.

5.0 RESPONSIBILITIES

5.1 **Supervisors** shall be responsible for the following:

5.1.1 Notifying and coordinating with support organizations when assistance is required.

5.1.2 Directing the storage of containers of waste is consistent with Table 4 (Hazardous Waste Storage Compatibility Chart) segregation requirements.

5.1.3 Controlling access to storage areas.

5.1.4 Supplying communications equipment for use while handling hazardous waste.

5.1.5 Ensuring that personnel are qualified per the established qualification requirements identified by the Division Manager.

5.1.6 Providing records to Waste Operations Support for distribution to the RCRA Operating Record per record keeping requirements.

5.1.7 Notifying the Assistant Emergency Duty Officer (AEDO) if a spill occurs.

5.1.8 Ensuring specified storage configuration, aisle spacing, waste segregation and other building requirements are maintained.

5.1.9 Ensuring the appropriate respiratory protection and any other Personal Protective Equipment (PPE) requirements specified by the work permit the process being performed are worn.

5.1.10 Issuing the appropriate respiratory protection and/or PPE to personnel as specified on applicable permits.

5.1.11 Ensuring that enriched restricted nuclear material is not stored in a hazardous waste storage area unless there is Radiation Detection Alarm (RDA) coverage for the storage area and appropriate Criticality Safety Analyses (CSAs).

5.1.12 Ensuring any unacceptable conditions identified during pre-storage inspection are corrected and/or requesting QA to issue DRs or CARs for problems that are not corrected.

5.1.13 Reviewing applicable Material Safety Data Sheets (MSDS) and Material Evaluation Form (MEF) with personnel.

5.1.14 Signing the "NM-Transfer/Receipt/Identification Record" (68/69/XX Card) (See Figure 4).

5.2 **Waste Operations Support** shall be responsible for the following:

5.2.1 Designating storage areas for all waste based on best available storage location and writing Task Orders specifying containers to be moved.

5.2.2 Determining and implementing applicable regulations.

6989

5.0 RESPONSIBILITIES (cont.)

5.3 **Waste Operations Personnel** shall be responsible for the following:

5.3.1 Maintaining required storage configuration, aisle spacing, waste segregation, and other building requirements.

5.3.2 Notifying the Storage Area Supervisor or if unavailable the AEDO immediately of spills, leaks, releases, and any unusual conditions.

5.3.3 Performing all applicable inspections.

5.3.4 Complying with this procedure and all posted signs and permits.

5.4 **Materials Control and Accountability (MC&A)** shall be responsible for the following:

5.4.1 Preparing and maintaining nuclear material transfer records after containers are filled.

5.4.2 Signing "NM-Transfer/Receipt/Identification Record" 68/69/XX Card.

5.4.3 Providing bar-coded and Hazardous Waste marking (labels) for containers to storage personnel.

5.4.4 Maintaining a current inventory.

6.0 GENERAL

6.1 Warnings, Cautions, and Notes shall precede the Section, Sub-Section, Item, Step, or Sub-Step to which they apply.

7.0 HEALTH AND SAFETY REQUIREMENTS

WARNING

When using pressurized aerosol cans (i.e., spray paint cans) for the reconditioning of containers at the FEMP, *DO NOT* place cans in/around a heater, open-flame or any type of heated/ignition type source to prevent explosion hazard.

7.1 Nuclear safety spacing requirements are applicable to the separation of Enriched Restricted (all red) drums in RCRA Storage Areas.

7.2 Safety glasses shall be worn unless other eye protection is specified by Industrial Health (IH) and/or Radiological Control.

7.3 PPE as specified by the work permit shall be worn.

7.4 Neoprene rubber gloves, rubber apron, face shield, and chemical cover goggles or other PPE as specified on a permit shall be worn if there is a possibility of being splashed with caustic, acids, or a chemical that could cause skin damage.

7.0 HEALTH AND SAFETY REQUIREMENTS (cont.)

7.5 In case of contact with acid or caustic, contaminated clothing shall be removed and the affected body area flushed with water in an eye bubbler/safety shower for 15 minutes. Injured personnel shall report to Medical Services.

7.6 Leather-palm gloves shall be worn while handling drums, and when handling rough or sharp-edges.

7.7 A spill of hazardous waste shall be reported to the Supervisor immediately and cleaned up per Procedure 20-C-606.

NOTE: Plumbed eyewashes shall be flushed weekly. Portable eyewashes shall have the pressure checked weekly and the fluids changed every 6 months. The required operating pressure is stated on a plate/decal attached to each portable eyewash. Eyewashes shall be easily accessible and on the same floor as the splash hazard.

7.8 Personnel safety equipment (eyewash, fire extinguishers, safety showers) and emergency response equipment shall be operational and readily available for emergencies.

7.9 Personnel shall have reviewed and be familiar with MSDSs and MEFs for hazardous chemicals/materials that may be used or encountered.

7.10 Only non-Beryllium alloy non-sparking tools shall be used when working with drums of ignitable waste (D001).

7.11 Any situation which could have resulted in the inhalation, ingestion, or absorption of a hazardous material shall immediately be reported to a Supervisor or to the Assistant Emergency Duty Officer (AEDO), who will immediately report the circumstances to Medical and Industrial Hygiene. The involved personnel shall be directed by the Supervisor or AEDO as to when and where to report for medical evaluation, completion of an Incident Investigation Report (IIR) (Form No. FS-F-1458), and submitting bioassay samples (e.g. blood, urine). Employees are responsible for complying with any additional requirements as specified by S&H.

7.12 Any circumstance which could have resulted in an intake of radioactive materials by inhalation, ingestion or absorption shall immediately be reported to a Supervisor. The Supervisor shall immediately report the circumstance of possible radioactive materials intake to S&H Radiological Safety Section for evaluation. The involved personnel shall report to the Urine Sampling Station at the end of their shift to complete an Incident Investigation Report (IIR) (Form FS-F-1458), and submit an incident urine sample. The involved personnel shall also report to the Urine Sampling Station at the start of their next shift to submit a follow-up urine sample. Employees are responsible for complying with additional requirements as specified by the Radiological Safety Section. When the suspect isotope is other than uranium, the involved personnel shall report to the dosimetry section of the radiological control department for further determination of actions.

8.0 PROCEDURE

8.1 Inspecting Containers of Hazardous Waste Received at Storage Areas

OPERATOR

8.1.1 Remove the container that is being received from the Spill Accumulation Container (SAC) if one is present.

8.1.2 Return the SAC to the generator.

8.1.3 From the plastic envelope on top of the drum remove the "Item Production/Certification/Identification Card (65-1, 2, 3, 4 Card), Form FS-F-1945-1, the Nuclear Materials Transfer-Receipt-Identification Record" (68/69/XX Card), Form FS-F-1990, and the Material Evaluation Form (MEF).

A. Personnel must review the MEF to be familiar with the hazards that may be encountered.

B. Verify information on the 65-1, 2, 3, 4 card and 68/69/XX card is correct.

8.1.4 Inspect the container per Table 1.

A. If the container is a drum containing liquid and there is evidence that liquids have spilled from the lid area, notify the Supervisor and replace the lid and/or gasket.

B. If there is still evidence of liquid present after the lid and gasket have been replaced, then overpack the container per Procedure 20-C-600.

NOTE: The RGC replaces the color dot code. Containers with a color dot are acceptable but must be stenciled with the RGC.

8.1.5 Check the exterior of the containers for lot code markings, reactivity group code (RGC), gross, net, and tare weights, container inventory number, Material Evaluation Form (MEF) number, and Hazardous Waste marking (labels).

NOTE: Stencil height of markings shall be 1 1/2 to 2 inches. Small safety cans used in SAAs only have 1 inch markings (Refer to SSOP-0035).

8.1.6 Check the marking height for the FEMP Lot Marking Number, RGC, container number, and gross/net/and tare weight.

NOTE: For drums containing PCBs there must be PCB markings (labels) affixed to the drum and at all entrances where PCBs are being stored.

8.1.7 Check that the Hazardous Waste marking (label) is attached with the address and EPA ID codes and accumulation start date provided, but the remainder of the label must not be filled out until shipment (not during storage).

8.0 **PROCEDURE** (cont.)

8.1 Inspecting Containers of Hazardous Waste Received at Storage Areas (cont.)

OPERATOR (cont.)

8.1.8 Verify that containers containing Asbestos (material type 028) are marked with the words "**DANGER ASBESTOS CONTAINING MATERIAL.**"

8.1.9 Ensure that labels and markings are to the right or left of the seam (See Figure 1 and/or Figure 2) for drums in storage. For white metal boxes in storage (See Figure 3).

8.1.10 Relocate the label as required, if a label is placed over a drum chime.

8.1.11 Remove and discard "painted over" labels.

8.1.12 Ensure that bung drums are labeled per Figure 2 using an imaginary center line from the large bung hole to the bottom of the drum.

8.1.13 Ensure that plastic drums which do not have a seam are labeled in the relative positions shown in Figure 1 and/or Figure 2.

8.1.14 Check for and remove loose dirt, rocks, and/or rubble on the pallet or container.

8.1.15 Check the tightness of the bolt on bolt-type lock rings and tighten if loose.

8.1.16 Check the bung plug on bung head drums for tightness and tighten if loose.

8.1.17 Check for a rain cap, and if present, remove the cap and return the cap to the Generator.

NOTE: The Hazardous Waste Container Pre-Transfer Checklist ***only*** needs to be completed when drums are being received from a Satellite Accumulation Area.

8.1.18 Check that all lines on the "Hazardous Waste Container Pre-Transfer Checklist," (Form No. FS-F-3133) are filled in.

8.1.19 Check that all lines on the "CHA/90-DSA Hazardous Waste Container Pre-Transfer Checklist", (Form No. FS-F-3455) are filled in.

8.1.20 Notify the Supervisor that the inspection is complete.

8.1.21 Notify the Supervisor of containers that fail the pre-storage inspection.

8.1.22 When the inspection is complete, the MC&A Representative and the Waste Operations Supervisor and Inspector shall sign and date the Pre-Storage Checklist (See Attachment A).

8.0 **PROCEDURE** (cont.)

8.1 Inspecting Containers of Hazardous Waste Received at Storage Areas (cont.)

OPERATOR (cont.)

NOTE: The Pre-Storage Checklist may be discarded after the container is officially received by signing the 68/69/XX card.

8.1.23 MC&A and the Waste Operations Supervisor shall sign the "Nuclear Material Transfer/Receipt/Identification Record," (68/69/XX card).

8.2 Placing Inspected Containers in Storage

MC&A REPRESENTATIVE

8.2.1 Provide an 8 1/2 inch x 11 inch Bar Coded label printed with a container inventory number, lot code number, container gross, tare, and net weights, and Material Evaluation Form (MEF) number if no bar code label is present.

OPERATOR

8.2.2 Place the bar code label to the left of the seam in the center section of the drum (See Figure 1 and/or 2) or the lower left side of white metal boxes (See Figure 3).

8.2.3 Stencil the inventory numbers on the drum or box.

A. Inventory numbers shall be 1 1/2 to 2 inches in height.

B. Inventory numbers shall be located to the right of the drum seam opposite the RGC (See Figure 1 and/or 2) or on the end between the box number and hazardous waste marking (label) (See Figure 3).

NOTE: The MC&A representative shall inform the Operator of the inventory number and record data for RCRA Inventory database.

C. A single RGC system has been adopted for the identification of the primary hazard contained in each inventory container. The single RGC will be carried on the MC&A inventory list per waste stream. All containers currently in inventory are grandfathered with their current codes, but will contain at minimum the new primary code. This means that the current inventory of containers with multiple RGCs will not need to be changed, however, during drum overpacking, drum movement, etc., the drums might be changed. Until all containers are updated to the single RGC system the MC&A inventory will be considered the accurate record.

NOTE: Loads shall be consistent with pallet drum capacity and stacking limits in Table 2.

8.2.4 Using a forklift or hand stacker, load the drums on pallets with drum labels facing outward so the labels can be seen from the inspection aisle.

8.0 PROCEDURE (cont.)

8.2 Placing Inspected Containers in Storage (cont.)

SUPERVISOR

NOTE 1: The RGC is stenciled directly below the FEMP Lot Number (Refer to Figure 2 and/or 3).

NOTE 2: Waste Operation Support shall specify storage with compatible materials using the RGC (See Tables 3 and 4). If more than one RGC appears on the container, contact MC&A to determine the primary code for storage/compatibility purposes.

8.2.5 Direct the storage of the container in a location specified by Waste Operations Support.

OPERATOR

NOTE: Plastic containers cannot be stacked. If stacking is required then overpack container into a steel drum.

8.2.6 Place the drums in storage per stacking limitations (See Table 2).

MC&A REPRESENTATIVE

NOTE: All paperwork for containers in RCRA Storage will be stored in the Plant 6 MC&A office.

8.2.7 Record the drum location.

OPERATOR

8.2.8 Stack containers in accordance with NFPA 30 (See Table 5), if the container has an RGC of K (Ignitable).

NOTE 1: Regulatory guidelines state that aisle spacing between rows is a minimum of 22 inches (indoor drum storage) or 24 inches (outdoor drum storage).

NOTE 2: For the inspection of containers, once placed into storage, refer to Procedure 20-C-616.

NOTE 3: Deviations from 3 foot to 22 inches indoor or 24 inches outdoor asile spacing can be approved by Waste Operations Support.

8.2.9 Maintain a three foot aisle spacing between drums stored on pallets and curbs, and between rows of drums stored on pallets within a storage bay.

6989

CONTAINER INSPECTION CATEGORIES

TYPE	CHARACTERISTIC	CORRECTIVE ACTION
I	Material flowing from the container with an accumulation on the pallet or pad.	1. Notify the Supervisor. **The Supervisor shall notify the AEDO. The Supervisor shall initiate an Occurrence Report.** 2. Immediately stop or contain the leak. 3. Record on the inspection form that the container requires mitigation within 24 hours. 4. Complete additional cleanup as necessary.
II	Material on the container exterior only; no material on the pallet or pad.	1. Record the leak on the inspection form. 2. Notify the Supervisor. **The Supervisor shall initiate an Occurrence Report and notify the AEDO and the Utilities Engineer. The Supervisor shall review the completed inspection forms to prioritize containers for transfer to the overpacking area and subsequent mitigation.**
III	The container exterior is discolored with visible contamination; no material release. Severe corrosion with deep pitting and/or metal flaking. Holes, dents and/or bulges which affect container to the degree of potential release.	1. Record the condition on the inspection form. 2. Notify Supervisor. **The container requires disposition as directed by the Supervisor.**

CONTAINER INSPECTION CATEGORIES
Table 1

PALLET DRUM CAPACITY & STACKING LIMITS

CONTAINER	DRUM/PALLET	MAXIMUM INDOOR STACKING HEIGHT	MAXIMUM OUTDOOR STACKING HEIGHT
85-Gallon Overpack	3	3 Pallets	3 Pallets
55-Gallon Drum	4	4 Pallets	3 Pallets
30-Gallon Drum	4	4 Pallets	3 Pallets
10-Gallon Pail	9	7 Pallets	3 Pallets
5-Gallon Pail	16	7 Pallets	3 Pallets
110-Gallon Overpack	2	1 Pallet on Top Pallet of Stack	3 Pallets
White Metal Boxes	N/A	3 High	3 High

NOTE 1: If the container has a RGC of K "Ignitable" the stacking of containers should be in accordance with NFPA 30. Refer to the MEF for the flashpoint to determine the class (if <73°F = Class I-A Flammable) which will then determine the maximum pile height for containers. (See Table 5)

NOTE 2: Stacking four-high may also consist of any of the following configurations:

- Three pallets of 55-gallon drums with either one pallet of 85-gallon drums or one pallet of 110-gallon drums on top.
- Two pallets of 55-gallon drums with two pallets of 85-gallon drums on top.

PALLET DRUM CAPACITY AND STACKING LIMITS
Table 2

6989

HAZARDOUS WASTE REACTIVITY GROUP CODES

REACTIVITY GROUP CODE (RGC)	MATERIAL	WASTE STREAM
A	halogenated organics, polychlorinated biphenyls (PCBs)	1. Sludges, filter cakes, and sump cakes from the Lab, the Garage, and the Plant, which are solvent contaminated. 2. Solvent contaminated pallet wood. 3. PCB waste are contained in this area. 4. Spent enamels from drum painting, spent paint thinners.
B	hydrocarbons, and other combustible materials with flash point > 140 degrees F (flash point > 140 degrees F)	1. TBP/kerosene from Plant 2/3, and DAAP/TBP/kerosene from T-5, T-6 tanks. 2. Used oil from Plants and the Garage. 3. Sludges, filter cakes, sump cakes, and spent chlorinated solvents and still bottoms containing flammable, but not ignitable solvents. 4. Solvent contaminated pallet wood.
C	mineral acids, and other corrosives (pH < or = 2)	1. Chromic acid waste from the lab. 2. TBP/kerosene from Plant 2/3 containing nitric acid. 3. Hydrofluoric acid waste and HF residue.
D	caustics and bases (pH > or = 12.5)	1. Unused caustic crystals from the Decontamination Building. 2. Spent caustic soda decontamination residue. 3. Wet caustic sump filter cake from Plant 6.

HAZARDOUS WASTE REACTIVITY GROUP CODES
Table 3 (Sheet 1 of 3)

8868

HAZARDOUS WASTE REACTIVITY GROUP CODES

REACTIVITY GROUP CODE (RGC)	MATERIAL	WASTE STREAM
E	toxic and TCLP metals	1. Barium chloride salt from RMI metal heat treating. 2. Residue from closure of the FMPC barium chloride treatment facility. 3. Barium sulfate filter cake from the Pilot Plant. 4. Furnace salt from Plants 6 and 9. 5. Sand blast paint residue. 6. Mercury spill residue. 7. Beryllium waste from mold and crucible coating operations.
F	inorganic fluorides	1. Roasted magnesium fluoride from Plant 1 milling. 2. Dust collector residues from Plants 2/3 and 5. 3. Ground magnesium fluoride from Plant 2/3.
G	water containing mixtures	1. Decontamination residue from drum reconditioning. 2. Residue from closure of the barium chloride treatment facility. 3. Spent caustic soda decontamination solutions, which are not RCRA corrosive.
H	cyanide and sulfide compounds	1. Spent cyanide and sulfide compounds and solutions from the Laboratory.

HAZARDOUS WASTE REACTIVITY GROUP CODES
Table 3 (Sheet 2 of 3)

6989

HAZARDOUS WASTE REACTIVITY GROUP CODES

REACTIVITY GROUP CODE (RGC)	MATERIAL	WASTE STREAM
I	oxidizers (readily evolves oxygen)	1. Uranyl nitrate. 2. Sodium nitrate. 3. Potassium permanganate.
J	water reactives (reacts violently with water) D003s	1. Magnesium flake, fines or powder. 2. Sodium metal.
K	ignitable (flash point < or = 140 degrees F)	1. Aerosols 2. Gasoline 3. Kerosene 4. Paints and solvents 5. Alcohols 6. Cyclohexane 7. Acetonitrile 8. Ketones and other ignitable hydrocarbons
L	organic peroxides	1. Methyl ethyl ketone with peroxide crystals. (None current at FEMP). 2. Hydrogen peroxide.
M	explosives	1. Nitro compounds. None current at FEMP. 2. Dry picric acid. None current at FEMP.

HAZARDOUS WASTE REACTIVITY GROUP CODES
Table 3 (Sheet 3 of 3)

0888

HAZARDOUS WASTE STORAGE COMPATIBILITY CHART

REACTIVITY GROUP DESCRIPTION	RGC CODE *(1)*	A	B	C	D	E	F	G	H	I	J	K	L	M
HALOGENATED ORGANICS AND PCBs	A	X	X	0	0	X	X	X	0	0	0	X	0	0
ALCOHOLS AND COMBUSTIBLES	B	X	X	0	0	X	X	X	X	0	0	X	0	0
MINERAL ACIDS + CORROSIVES	C	0	0	X	0	0	0	0	0	0	0	0	0	0
CAUSTICS	D	0	0	0	X	0	0	0	0	0	0	0	0	0
TOXICS AND TCLP METALS	E	X	X	0	0	X	X	X	X	0	0	X	0	0
FLUORIDES	F	X	X	0	0	X	X	X	X	0	0	X	0	0
WATER MIXTURES	G	X	X	0	0	X	X	X	X	0	0	X	0	0
CYANIDES	H	0	X	0	0	X	X	X	X	0	0	X	0	0
OXIDIZERS	I	0	0	0	0	0	0	0	0	X	0	0	0	0
REACTIVES	J	0	0	0	0	0	0	0	0	0	X	0	0	0
IGNITABLE	K	X	X	0	0	X	X	X	X	0	0	X	0	0
PEROXIDES	L	0	0	0	0	0	0	0	0	0	0	0	[illegible]	[illegible]
EXPLOSIVES	M	0	0	0	0	0	0	0	0	0	0	0	0	[illegible]

(1) An "X" indicates a compatible combination, and an "0" indicates an incompatible combination.

HAZARDOUS WASTE STORAGE COMPATIBILITY CHART
Table 4

6989

NFPA 30

EPA RCRA Definitions		NFPA 30 Definitions	
RCRA Ignitable Liquid (D001)	Flash Point <140°F	NFPA Class I-A Flammable Liquid	Flash Point <73°F Boiling Point <100°F
		NFPA Class I-B Flammable Liquid	Flash Point <73°F Boiling Point ≥100°F
		NFPA Class I-C Flammable Liquid	Flash Point ≥73°F and <100°F
		NFPA Class II Combustible Liquid	Flash Point ≥100°F and <140°F
		NFPA Class III-A Combustible Liquid	Flash Point ≥140°F and <200°F
		NFPA Class III-B Combustible Liquid	Flash Point ≥200°F

Indoor Unprotected Storage of Liquids in Containers

	Container Storage		
Class	Max. Pile Height (ft)	Max. Quant. per Pile (gal)	Max. Total Quant.(gal)*
IA	5	660	660
IB	5	1,375	1,375
IC	5	2,750	2,750
II	10	8,250	8,250
IIIA	15	27,500	27,500
IIIB	15	55,000	55,000

NOTE:
- Get flashpoint from the MEF.
- Determine class from the flashpoint.
- Refer to class for the maximum pile height in feet.

NFPA 30
Table 5

9880

EXAMPLE OF LABELS/MARKINGS
OPEN HEAD DRUM

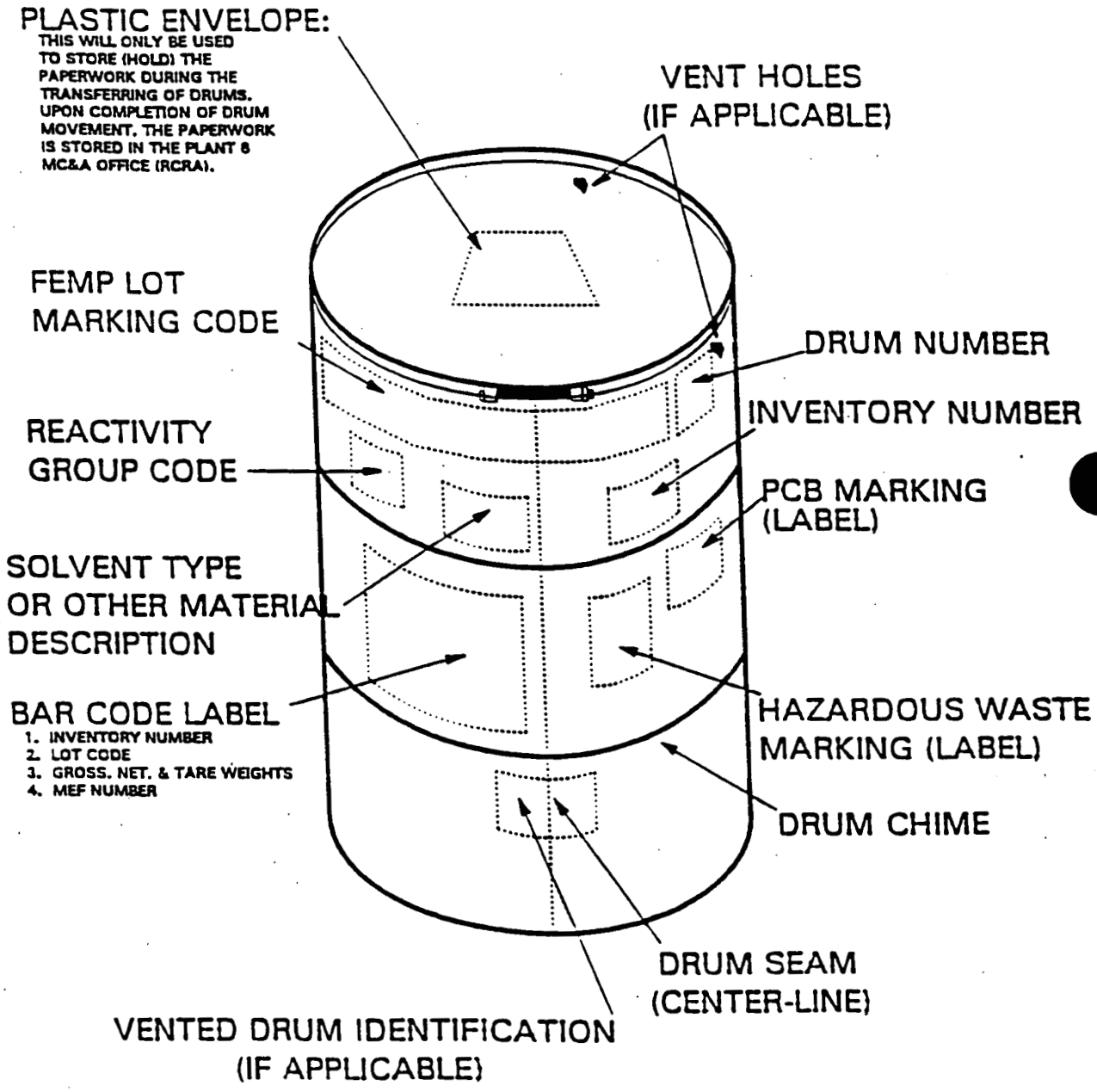

DIAGRAM OF HAZARDOUS WASTE DRUM LABELS/MARKINGS FOR STORAGE IN RCRA WAREHOUSES

DIAGRAM OF HAZARDOUS WASTE DRUM LABELS/MARKINGS FOR STORAGE IN RCRA
Figure 1

6989

EXAMPLE OF LABELS/MARKINGS
BUNG DRUM

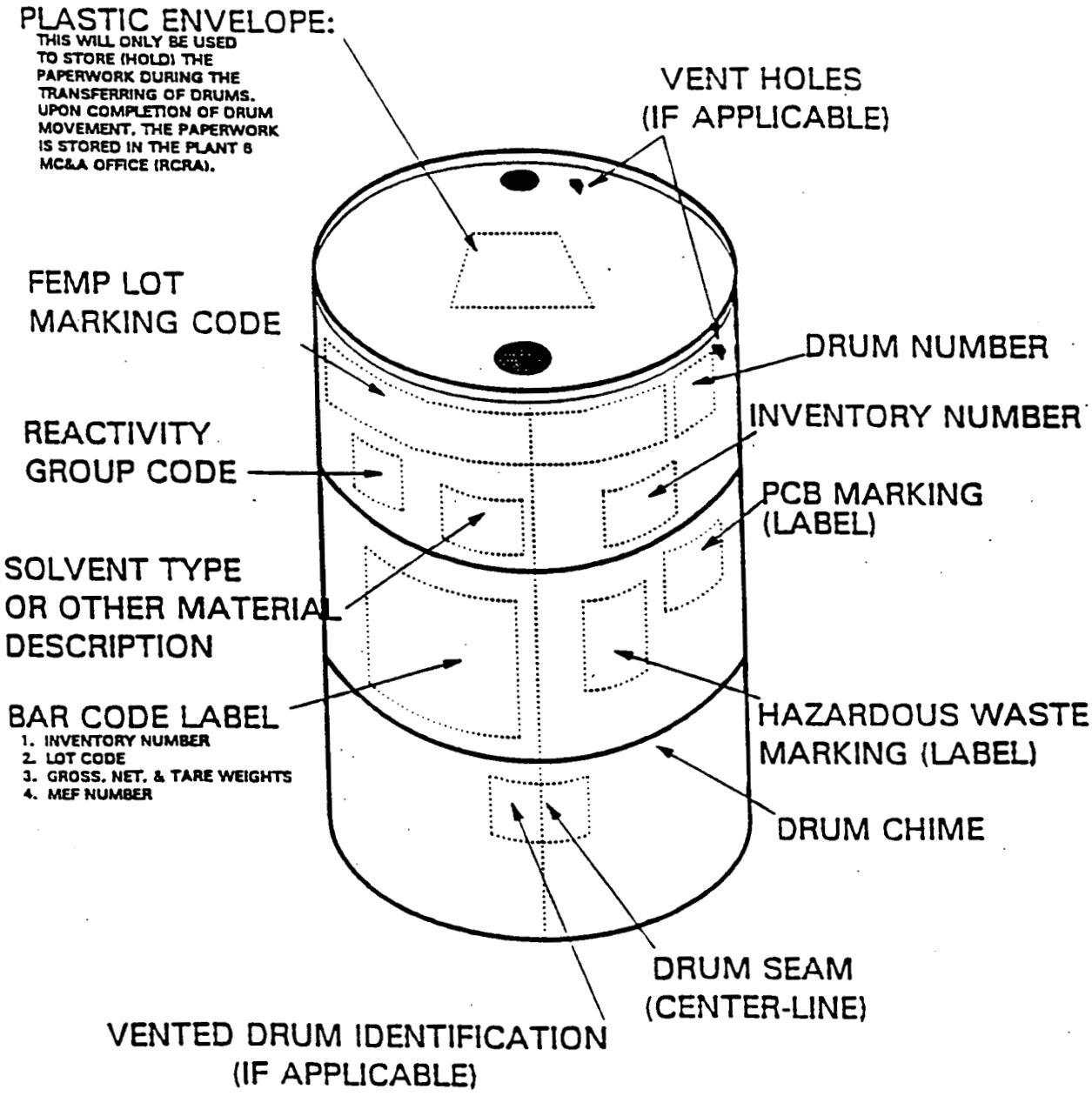

DIAGRAM OF HAZARDOUS WASTE DRUM LABELS/MARKINGS FOR STORAGE IN RCRA WAREHOUSES

DIAGRAM OF HAZARDOUS WASTE DRUM LABELS/MARKINGS FOR STORAGE IN RCRA WAREHOUSES
(BUNG DRUM)
Figure 2

EXAMPLE OF LABELS/MARKINGS WHITE METAL BOXES

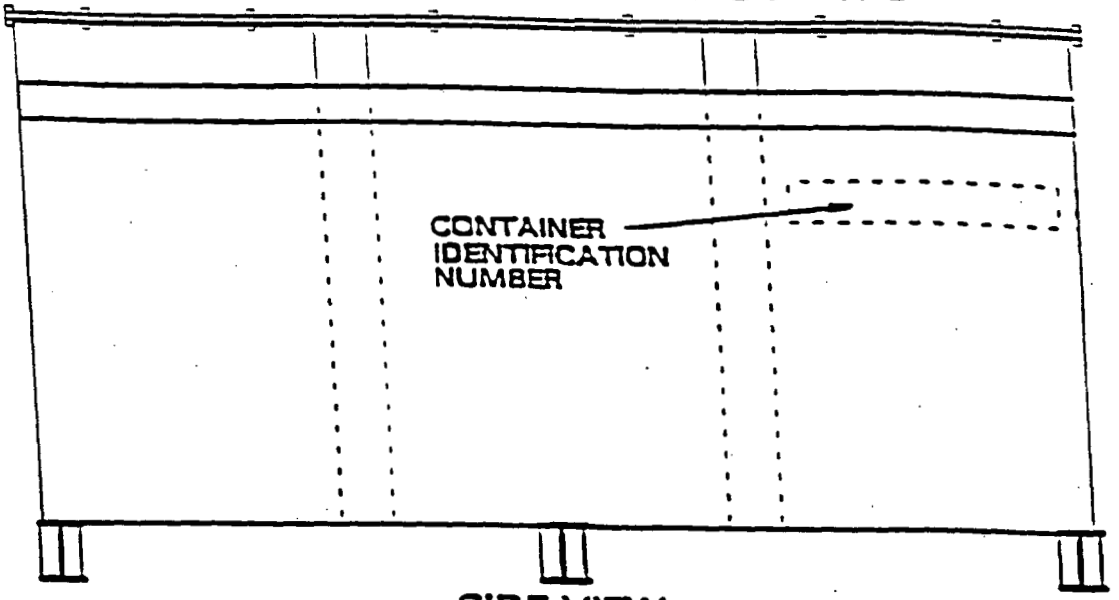

SIDE VIEW

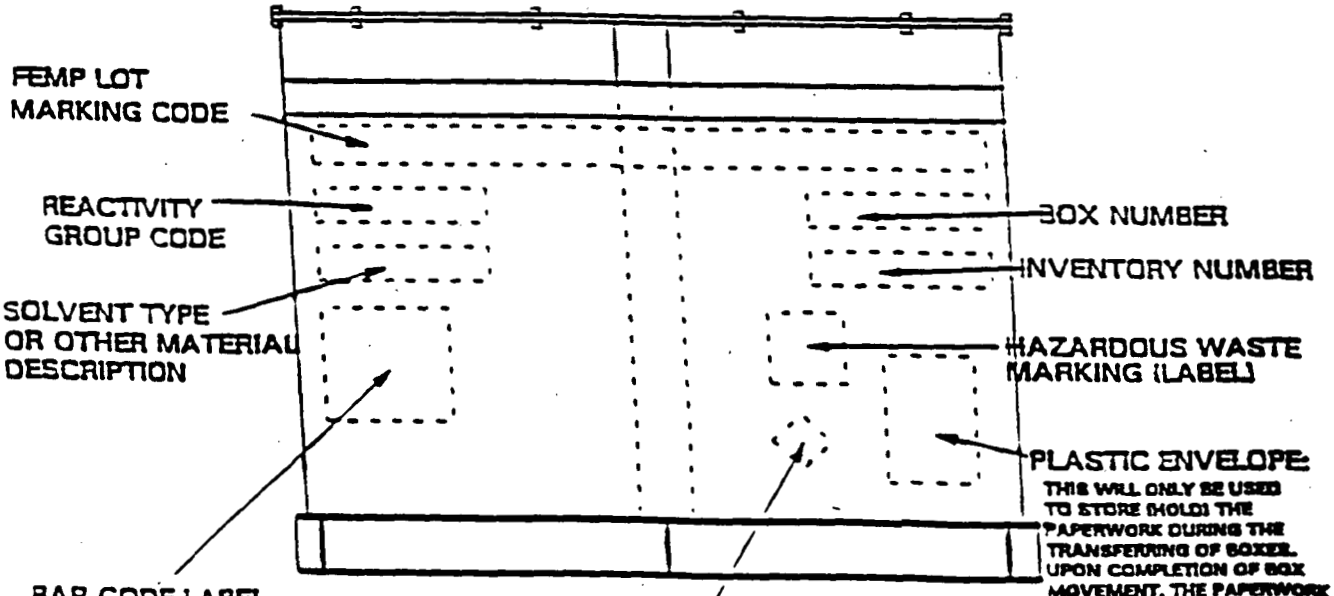

END VIEW

DIAGRAM OF WHITE METAL BOX LABELS/MARKINGS
Figure 3

6989

NUCLEAR MATERIAL TRANSFER RECORD

CARD PL.	CARD NO.
	68

NEGATIVE	DATE TRANSFERRED MO.	DAY	YEAR	SHIFT	TRANS. BY BADGE NO.

NOTE: Green card is for receiver information ONLY and may be retained in file. DO NOT FORWARD to Data Processing. DO NOT LEAVE with the material.

P.O. NO.:	SOURCE:	MBA: (FROM)	PLANT:
MATERIAL CLASS:	MATERIAL TYPE:	MBA: (TO)	PLANT:
LOT SEQUENCE NO.:		STORAGE LOCATION:	
SHAPE CODE:			

NO. OF CONTAINERS OR ITEMS

NUMBER	DESCRIPTION

GROSS WEIGHT:

TARE WEIGHT:

SIGNATURES:

FS-F-1990 (REV. 3/9/92) (SHIPPER) (TRANSPORTATION) (RECEIVER)

MATERIAL IDENTIFICATION RECORD

CARD PL.	CARD NO.
	XX

NOTE: Green card is for receiver information ONLY and may be retained in file. DO NOT FORWARD to Data Processing. DO NOT LEAVE with the material.

NEGATIVE	DATE TRANSFERRED MO.	DAY	YEAR	SHIFT	TRANS. BY BADGE NO.

P.O. NO.:	SOURCE:	MBA: (FROM)	PLANT:
MATERIAL CLASS:	MATERIAL TYPE:	MBA: (TO)	PLANT:
LOT SEQUENCE NO.:		STORAGE LOCATION:	
MATERIAL DESCRIPTION			
SHAPE CODE:			

NO. OF CONTAINERS OR ITEMS

NUMBER	DESCRIPTION

GROSS WEIGHT:

TARE WEIGHT:

SIGNATURES:

FS-F-2221 (REV. 3/9/92) (SHIPPER) (TRANSPORTATION) (RECEIVER)

NUCLEAR MATERIAL RECEIPT RECORD

CARD PL.	CARD NO.
	69

NOTE: Green card is for receiver information ONLY and may be retained in file. DO NOT FORWARD to Data Processing. DO NOT LEAVE with the material.

NEGATIVE	DATE TRANSFERRED MO.	DAY	YEAR	SHIFT	TRANS. BY BADGE NO.

P.O. NO.:	SOURCE:	MBA: (FROM)	PLANT:
MATERIAL CLASS:	MATERIAL TYPE:	MBA: (TO)	PLANT:
LOT SEQUENCE NO.:		STORAGE LOCATION:	
MATERIAL DESCRIPTION			
SHAPE CODE:			

NO. OF CONTAINERS OR ITEMS

NUMBER	DESCRIPTION

GROSS WEIGHT:

TARE WEIGHT:

SIGNATURES.

FS-F-2220 (REV. 3/9/92) (SHIPPER) (TRANSPORTATION) (RECEIVER)

NM-TRANSFER/RECEIPT/IDENTIFICATION RECORD
(68/69/XX CARD)
Figure 4

FEMP
HAZARDOUS WASTE CONTAINER PRE-STORAGE CHECK LIST

Storage Area: _____ Date: _____ Time: _____

FEMP Lot Number: _____

ITEM NO.	INSPECTION ITEM	ACCEPTABLE		OBSERVATIONS & DATE CORRECTED
		YES	NO	
1	Verify Information on 65 Card			
2	Verify Information on 68/69/XX Card			
3	Pre-Transfer Checklist (for SAA Drum(s) only)			
4	CHA/90-DSA Hazardous Waste Container Pre-Transfer Checklist (For RCRA Characterization Material Only)			
5	Material Evaluation Form			
	VERIFY DRUM MARKINGS:			
6	FEMP Lot Marking Number			
7	Reactivity Group Code (RGC)			
8	Gross and Tare Weight			
9	Inventory No.			
10	Verify Marking Height (1 1/2" to 2")			
	VERIFY CONTAINER LABELS:			
11	Hazardous Waste Marking (Label)			
12	Label Locations			
	CHECK CONDITION OF CONTAINER AND SKID:			
13	Loose Dirt, Rock or Rubble			
14	Top and Bottom			
15	Bolt-Type or Bung Type Lid			
16	Rims			
17	Corrosion			
18	Rain Cap			
19	Hole			
20	Dent			
21	Bulge			
22	Lid Taped (If Liquid)			
23	Other (List)			

MC&A	SIGNATURE:	BADGE NO:
WASTE OPERATIONS SUPERVISOR	SIGNATURE:	BADGE NO:
INSPECTOR	SIGNATURE:	BADGE NO:
INVENTORY NUMBER		

COMMENTS: _____

_____

_____

FEMP HAZARDOUS WASTE CONTAINER PRE-STORAGE CHECK LIST
Attachment A

6989

RECORD OF ISSUE/REVISIONS

DATE	REV. NO.	DESCRIPTION AND AUTHORITY
06-05-92	0	Issued to establish white box and drum inspection criteria per P92-120, initiated by L. Honigford.
03-28-93	1	Revised to incorporate CIOs C92-156 (P92-315), C92-157 (P92-316), C92-158 (P92-317), C92-176 (P93-192) and C92-177 (P93-191).
09-01-94	0	Issue of document to update to current requirements per Request No. P94-0393, initiated by J. Baarlaer. The document format does not conform to current RSO SOP format per PO-D-026, format changed at the request of 20-C-630 document owner.
03-20-95	0	Reissued to update to current requirements and format per Request No. P94-0530, initiated by M. Harper.

FERNALD ENVIRONMENTAL RESTORATION MANAGEMENT CORPORATION		DOCUMENT NUMBER: QP-12.03
QUALITY ASSURANCE PROCEDURE	SUBJECT: CERTIFICATION OF WASTE CONTAINERS AND FILLING WITH L-LRW FOR SHIPMENT TO THE NTS	REVISION: 2
		Page 1 of 40
	AUTHORIZED: (VP, Performance/Quality Assurance)	Effective Date: 05/08/95

1.0 SCOPE

This procedure establishes a detailed method for the certification of Low-Level Radioactive Waste (L-LRW) containers, from preparation of the empty container through filling the containers with waste for shipment to the Nevada Test Site (NTS). This procedure ensures compliance with all applicable federal regulations.

2.0 PROCEDURE

2.1 Industrial Health and Safety Requirements

2.1.1 At a minimum, safety glasses with side shields and leather safety shoes which cover the complete foot are to be worn by all personnel at all times while in the process area of the Fernald Environmental Management Project (FEMP).

2.1.2 Determination of requirements for proper safety equipment to be utilized by each employee working with waste material is made in accordance with the specific project work plan (WP), the FEMP-2128, "FEMP Industrial Hygiene and Safety Manual" and DOE/EH-0256T, "Department of Energy (DOE) Radiological Control Manual."

2.1.3 Supervisors and managers are responsible for making required safety equipment available to all workers within their area of responsibility and seeing that it is being used in accordance with the Safety & Health (S&H) procedure ESH-1-1000, "Comprehensive Environmental, Occupational Safety and Health Program."

2.2 Event Notification and Reporting Requirements

2.2.1 Any circumstances of event which could have resulted in an intake of radioactive materials shall immediately be reported to supervision. In the Supervisor's absence the Assistant Emergency Duty Officer is to be notified in accordance with ED-0001, "Event Notification and Reporting."

2.2.2 Any personnel involved in a spill incident must report to Medical Services before the end of their shift on the day of the event to submit a urine sample and again at the start of their shift the next scheduled work day.

2.2.3 Spill incidents involving Resources Conservation and Recovery Act (RCRA) materials must be reported to the Spill Reporting Advisor in Environmental Compliance according to Site Operating Procedure SSOP-0067, "Spill Incident Reporting and Cleanup."

2.3 Responsibilities

2.3.1 Manager of Waste Programs Quality Assurance (QA)/Chief Waste Certification Official (CWCO) - Responsible for managing the activities of both the WCOs and the WPCs in such a way as to maintain independence from those who have direct responsibility for performing waste generation activities and to maintain compliance with the NTS and NVO-325. CWCO responsibilities include:

- Signing the Fernald Environmental Restoration Management Corporation (FERMCO) application signature page certifying that the information is correct and that the waste stream(s) will meet the NTS Waste Acceptance Criteria (WAC) upon implementation of the Waste Certification Program Plan (WCPP);

- Ensuring certification procedures are prepared and used for waste certification activities;

- Ensuring the performance of internal audits, inspections, surveillance and overviews;

- Ensuring timely identification of deficiencies and effective corrective action; and is also

- Responsible for assuring that alternate WCOs and WPCs are properly trained and qualified to the requirements of the NTS Defense WAC as discussed in NVO-325.

2.3.2 Alternate Waste Certification Official (WCO) - Responsible for assuring that all waste packages, data, and waste shipments comply with NVO-325.

2.3.3 Waste Package Certification Supervisor - Responsible for directing the activities of the WPCs in assuring all applicable inspections are conducted and all data (checklists, etc...) is compiled to assist the WCO in the certification process.

2.3.4 Waste Package Certifier (WPC) - Responsible for performing all activities specified in this procedure to assure all packages produced by Waste Programs Management (WPM) adhere to their most current procedures, and therefore, meet the requirements of NVO-325.

2.3.5 Waste Programs Management - Responsible for providing documentation, preparing waste packages, performing waste generation activities and conducting waste programs in accordance with all applicable requirements as referenced in NVO-325 and the WCPP.

2.4 Training Requirements

2.4.1 All Waste Package Certifiers (WPCs) and Waste Certification Officials (WCOs) who verify packaging for use in shipment of L-LRW to the NTS must be qualified, trained and certified in the following:

a. RM-0012, "Quality Assurance Program."

b. NVO-325, "Nevada Test Site Defense Waste Acceptance Criteria, Certification and Transfer Requirements."

c. The "Waste Certification Program Plan" in accordance with Procedure QP-6.04, "Qualification of Waste Package Certifiers" for WPCs or in QP-6.05, "Qualification of Waste Certification Officials" for WCOs.

d. Card 65-1, "Item Production / Certification / Identification" Training.

e. QA procedure QP-12.03,"Certification of Waste Containers and Filling with L-LRW for Shipment to the NTS."

f. QA procedure QP-12.04, "Certification of L-LRW Packages, Pre-Load Inspection Through Loaded Transport Vehicle Inspection, for Shipment to the NTS."

g. QA procedure QP-12.07, "Certification of Supporting Paperwork for Shipment of L-LRW to the NTS."

2.5 General Requirements for Verifying and Certifying

2.5.1 Only materials approved by the NTS, Waste Characterization, and WPM will be shipped. It is the responsibility of the CWCO to make pertinent information pertaining to approved materials available to all WPCs and WCOs.

2.5.2 WCOs may perform activities assigned to WPCs by authority of NVO-325.

2.5.3 Materials prohibited by NVO-325 and listed on the "Prohibited Materials List" (Attachment A) are not to be included in a shipment.

2.5.4 Only materials which have been characterized by Waste Characterization and have an acceptable Material Evaluation Form (MEF) determining the waste to be RCRA non-hazardous shall be packaged for shipment.

2.5.5 Beta/Gamma radiation levels must not exceed 200 millirem/hour measured externally at the surface of the container.

***Note: 200 millirem/hour may be increased to 1000 millirem/hour if conditions for exclusive use closed transport are met as specified in Title 49 CFR 173.441 (1) (i-iii).**

2.5.6 Second radiation readings are to be taken or calculated externally at one (1) meter from the surface of the container in accordance with 49 CFR 173.331 and S&H procedure RC-RDA-006, "Radiological Survey Requirement for Radioactive Material Shipping and Receiving."

2.5.7 Material that is a respirable fine, (able to be ingested through inhaling) is to always be packaged in double containment. Double containment constitutes either overpacking in larger containers or packaging in a drum with 6 mil or greater sealed liner. It is not permissible for either containment to leak in normal handling and transport.

2.5.8 Contents of the container may be viewed with the aid of a boroscope, when concern is raised about materials packaged in a container.

2.5.9 Contents of a sealed container may be viewed through Real-Time Radioscopy (RTR) when concern is raised about what materials may be in the container but not visible.

2.5.10 Changes made to entries on the checklists used by the WPC or WCO during the course of operations covered by this procedure shall be lined out and the new entry initialed and dated.

2.5.11 Checklists generated for surveillance, overview and routine activities are controlled documents and are to be forwarded to the WCO for review and use in certification.

2.6 Documentation of Deficiencies

If during any phase of the verification and certification processes, the WPC or WCO observes a deficiency to this procedure it is to be documented using the following guidelines:

2.6.1 Any deficiency observed should be documented on the appropriate checklist by the WPC or WCO.

2.6.2 A minor deficiency of a nature that can be corrected promptly is to be handled by notifying a Waste Technician for the correction to be made. The correction is to be documented on the checklist.

2.6.3 A deficiency of a nature that cannot be corrected promptly or requiring additional evaluation is to be documented in accordance with SSOP-0023, "Deviation and Corrective Action Report Processing" by the WPC or WCO. A "hold tag" (Attachment B) should be attached to the item of concern. (e.g. container)

2.6.4 A container with a "hold tag" should be segregated from other containers ready for shipment. The tag is to be removed only after the correction is made and the DR closed out by the originator or a designee. All hold tags must be removed before the NV-211 label is applied.

2.6.5 Disposal of any rejected containers, lids or accessories are the responsibility of WO or the generator of the package.

2.7 General Requirements for Approved Container Designs

It is the responsibility of the CWCO to determine if a container meets all the criteria for shipment of L-LRW to the NTS. The following rules apply to containers in general, items specific to each container design will be addressed later in this procedure:

2.7.1 Only container designs approved for shipment by the NTS as stated in NVO-325 and Title 49 CFR 173 are to be considered for packaging L-LRW.

2.7.2 Packaging will be done in strong tight containers that do not leak under normal transport and handling conditions, and which meet the criteria of Title 49 CFR 173.431 and 173.425.

2.7.3 Containers must not show signs of free liquids present at any stage in the process of packaging and no free liquids emitting from the containers at loading as defined by the "Leaker Inspection Types" table (Attachment C) located in PT-0007, "Packaging L-LRW in Metal Boxes for Off Site Shipment."

2.7.4 Containers must be free of holes and significant deformation. A "significant deformation" is characterized as a dent or bulge in the surface area of the container that could result in the leakage of radioactive material under conditions normally incident to transportation

Dents or bulges that exhibit the following characteristics are examples of significant deformation:

a. a sharp crease;
b. a possible crack;
c. evidence of wear to the metal; or a
d. dent or bulge located on a seam or corner edge.

2.7.5 Containers shall be free of rust causing exfoliation (scale), severe pitting, or other conditions having an effect on the serviceability of the waste container or which could flake off during transport as defined by the "Corrosion Inspection Types" table (Attachment D) located in PT-0007.

2.7.6 TL WMBs and Sea/Land containers with flaking paint will be repaired to prevent flaking paint from blowing off during transit to the NTS.

2.7.7 Wooden boxes or white metal box (WMB) type containers with locking pin closure are to be overpacked in Sea/Land containers for shipment.

2.7.8 Prior to filling, WMBs used for concrete or like materials which could damage the bottom of the container when filling are to have the bottom lined with wood skids.

2.7.9 Maximum gross weights, not to be exceeded, for the most frequent used containers are as follows:

a.	48 or 55 gallon drum	1200 lbs.
b.	85 gallon drum	1000 lbs.
c.	85 gallon overpack drum	1200 lbs.
d.	Lock Pin 4x4x7 metal box	6000 lbs.
e.	Electro●panel 4x4x7 WMB	*8000 lbs.
f.	Nominal 4x4x7 White Metal Box	8000 lbs.
g.	8x8x20 TopLoad WMB (TL WMB)	**42000 lbs.
h.	8x8x20 Sea/Land container	**42000 lbs.

*Note: E. has been reevaluated to hold 8000 lbs.

**Note: A waiver on the 42000 lbs. must be approved in writing by the manager of the Traffic division of Inventory Control & Traffic and a WCO. A copy of the letter shall be attached to the pre-load checklist when the paperwork is prepared in accordance with QA procedure QP-12.07.

2.8 General Surveillance Activity

Examination of scheduled and pre-planned packaging activities or any one-time special project governed by procedure or a specific project Work Plan will be performed according to procedure QP-7.01, "Administration and Conduct of Surveillance Activities." Surveillance activity will be pre-planned and scheduled by the Waste Programs QA manager based on the scope of the work and level of detail required by the activity.

A "Surveillance Checklist" (Attachment E) is to be developed by the WPC or WCO performing the surveillance at the time the project is assigned.

2.9 General Overview Activity

Examination of packaging activities governed by procedure or Work Plan but which are not pre-planned to the extent that surveillance per QP-7.01 can be scheduled, shall be overviewed by a WPC or WCO in an appropriate frequency to be established by the Waste Programs QA manager.

A "Quality Certification Overview (QCO) Checklist" (Attachment F) is to be developed by the WPC or WCO preforming the overview when a standard overview checklist has not already been developed for the activity. A continuation sheet is also available when more than one page is required. A "Quality Certification Overview Coversheet" (Attachment G) may also be used when additional information needs to be communicated. The QCO # is assigned by the secretary of Waste Programs QA and filed by activity.

2.10 Examination of Empty Containers Prepared For Filling

2.10.1 Metal Drums

Examination of empty drums by a WPC or WCO is not a routine requirement, and may be performed as an overview in accordance with PT-0005, "Packaging L-LRW In Drums for Offsite Shipment to the NTS." At a minimum, the overview is to be completed using the "Quality Certification Overview Checklist" Examination of Empty Drum Before Filling. (Attachment H) More specific questions may be added to the overview checklist as deemed necessary by the WPC or WCO performing the overview.

2.10.2 4x4x7 White Metal Box

Examination of empty WMBs by a WPC or WCO once they have been prepared for filling is a routine requirement, and is to be performed as an overview in accordance with PT-0007. At a minimum, the overview is to be completed using the "Quality Certification Overview Checklist" Examination of Empty WMB before Filling. (Attachment I) More specific questions may be added to the checklist as deemed necessary by the WPC or WCO performing the overview.

2.10.3 8x8x20 Top Load White Metal Box

Examination of empty TL WMBs by a WPC or WCO once they have been prepared for filling is a routine requirement, and is to be performed on a monitoring basis in accordance with PT-0007. The results of the examination are to be documented in Section 1 of the QP-910315-1 Rev. 3, "QUALITY L-LRW SEALAND/TL WMB EXAMINATION AT FILLING", (Attachment J) checklist. At a minimum, criteria for examination includes the following:

a. Verify the bottom of the TL WMB interior has been lined with wood skids or equivalent for loading material with sharp edges;

b. Verify there is a 1" to 2" covering of uncalcined diatomaceous earth (dicialite) and one wet-strength polypropylene/pulp super absorbent fabric in the bottom of the TL WMB for loading soil or wood;

c. Verify the TL WMB is free of holes and significant deformations;

d. Verify the TL WMB is free of scaling rust or severe pitting; and

e. Verify the TL WMB is free of flaking paint.

2.10.4 8x8x20 Sea/Land Container

Examination of empty Sea/Lands by a WPC or WCO once they have been prepared for filling is a routine requirement, and is to be performed on a monitoring basis in accordance with PT-0006, "Packaging L-LRW into ISO Containers for Shipment to the NTS." The results of the examination are to be documented in Section 1 of the "QUALITY L-LRW SEALAND/TL WMB EXAMINATION AT FILLING" (Attachment J) checklist. At a minimum, criteria for examination includes the following:

a. Verify that a 1/4" minimum continuous bead of RTV Silicone adhesive sealant, or equivalent, has been applied on all seams and corners of the Sea/Land interior;

b. Verify that the Sea/Land floor has been lined with wet-strength polypropylene/pulp super absorbent fabric;

c. Verify that the absorbent fabric has been covered with a 6 mil thick plastic sheet that extends at least 48" up each side of the Sea/Land;

d. Verify that plywood has been placed on the Sea/Land floor and up to four (4) feet in height on all sides;

e. Verify the Sea/Land is free of holes and significant deformations;

f. Verify the Sea/Land is free of scaling rust and severe pitting; and

g. Verify the Sea/Land is free of flaking paint.

2.10.5 **Trash Dumpster Inspection at Collection Points**

Examination of all assigned trash dumpsters shall be conducted at least once each month. Overviews are to be performed in accordance with SOP-20-C-604, "Control and Utilization of Contaminated Trash Dumpsters." The overview is to be completed using the "Quality Certification Overview Checklist" Examination of Contaminated Trash Dumpster (ATTACHMENT K) checklist. At a minimum, dumpster inspections are to include the following checks:

a. Verify the dumpsters are locked;

b. Verify trash in clear plastic bags has not accumulated around the dumpster.

Note: Clean office trash in green-tinted bags is accumulated on the ground next to the trash dumpsters. These bags are picked up by Transportation twice a week.

c. Verify that trash is secured in a clear plastic bag.

Note: Large bulky items may be placed directly into dumpster.

d. Verify the bags are taped and secured at the top.

e. Verify a prohibited materials list is posted on the dumpster door.

f. Verify no prohibited items are in the dumpster.

g. Verify bags are not damaged in any way.

h. Verify the building, office area or project from which the trash originated is written on the outside of each bag with a permanent marker.

2.11 Examination of Containers at Filling

2.11.1 Metal Drums

Examination of drums at filling by a WPC or WCO is not a routine requirement, but may be performed as an overview in accordance with PT-0005. The overview is to be completed using the "Quality Certification Overview Checklist" Examination of Drums at Filling. (Attachment L) More specific questions may be added to the checklist as deemed necessary by the WPC or WCO. At a minimum, the examination will include:

a. Verify that a prohibited materials list is displayed in the packaging area at a visible location;

b. Verify that the drum is empty at start or new materials are from the same waste stream as materials already in drum;

c. Verify that the materials packaged conform in appearance to the materials listed on the Card 65-1; (Attachment M)

d. Verify materials being packaged do not contain free liquids during any stage of filling the drum;

e. When mandated by WC's RCRA letter, verify that the correct Material Evaluation & Container Information (ME&CI) checklists have been initiated and are correct to this point;

f. When mandated by WC's RCRA letter, verify that a verification form signed by WC personnel along with a container inventory attachment listing the container in question also accompanies the container;

g. Verify the waste is tightly packed in the drum, and remains at least three (3) inches below the top of the drum; (freeboard);

h. Verify the drum has sustained no damage in the form of holes and significant deformations during filling; and

i. Verify the drum is free of scaling rust and severe pitting.

Note: Plant 8 residues may be packaged in 48-gallon jug head type lever lock drum, sealed with a sequentially numbered wire seal, and overpacked in a 55-gallon bolt closure type drum.

Note: Double containment may be used providing neither container leaks in normal handling and transport.

Note: As of the date this procedure is issued, approval has not been received to resume shipment of asbestos to the NTS. Also, there is no assurance that when and if shipment is resumed that asbestos in drums will be acceptable.

2.11.2 4x4x7 White Metal Box

Examination of the filling if WMBs by a WPC or WCO is not a routine requirement, but may be performed as an overview in accordance with PT-0007. The overview is to be completed using the "Quality Certification Overview Checklist" Examination of WMB at Filling. (Attachment N) More specific questions may be added to the checklist as deemed necessary by the WPC or WCO. At a minimum, the examination will include:

a. Verify that a prohibited materials list is displayed in the packaging area at a visible location;

b. Verify that the WMB is empty at start or new materials are from the same waste stream as materials already in WMB;

c. Verify that the materials packaged conform in appearance to the materials listed on the Card 65-1;

d. When mandated by WC's RCRA letter, verify that the correct ME&CI checklists have been initiated and are correct to this point;

e. Verify materials being packaged do not contain free liquids during any stage of filling the WMB;

f. When mandated by WC's RCRA letter, verify that a verification form signed by WC personnel along with a container inventory attachment listing the container in question also accompanies the container.

g. Verify the waste is tightly packed in the WMB, ensuring the weight limit is not exceeded and the load is balanced to prevent tipping;

h. Verify the WMB has sustained no damage in the form of holes, and significant deformations during filling; and

i. Verify the WMB is free of scaling rust and severe pitting.

2.11.3 **Contaminated Trash at Baling**

Examination of the activities at the trash baler while contaminated trash is being baled is to be performed by a WPC or WCO as an overview. The results of this overview and any resulting notifications will be documented on the QP-931025 Rev. 1, "QUALITY L-LRW PRE-BALED TRASH EXAMINATION" checklist (ATTACHMENT O). The checklist includes the following checks:

a. Verify the baler log is at the baler and is complete with each bags generation source listed.

b. Inspections will be performed in conjunction with the inspection at the collection point (dumpsters). One (1) copy of the completed checklist is to be sent to Waste Programs Management. A Nonconformance will generate a DR. Waste Programs QA will track nonconformances and issue a CAR to owners of contaminated trash dumpsters identified as having three (3) nonconformances during one (1) month.

Note: **Any unlabeled (unidentified source) clear plastic bag found outside a dumpster will be marked with a red X and must be internally inspected at the baler prior to the baling operation.**

2.11.4 8x8x20 Top Load WMB

Examination of the filling of TL WMBs by a WPC or WCO once they have been prepared is a routine requirement, and is to be performed on a monitoring basis in accordance with PT-0007. The results of the examination are to be documented in Section 2 of the "QUALITY L-LRW SEALAND/TL WMB EXAMINATION AT FILLING", checklist. (Attachment J) At a minimum, criteria for examination is to include the following:

a. Verify that a prohibited materials list is posted in the area at a visible location;

b. Verify that the TL WMB is empty at start or new materials are from the same waste stream as materials already in the TL WMB;

c. Verify that the materials packaged conform in appearance to the materials listed on the Card 65-1;

d. Verify materials being packaged do not contain free liquids during any stage of filling the TL WMB;

e. When mandated by WC's RCRA letter, verify that the correct ME&CI checklists have been initiated and are correct to this point;

f. When mandated by WC's RCRA letter, verify that a verification form signed by WC personnel along with a container inventory showing the container;

g. Verify the waste is tightly packed in the TL WMB, ensuring the weight limit is not exceeded and the load is balanced to prevent tipping;

h. Verify the TL WMB has sustained no damage in the form of holes and significant deformations during filling; and

i. Photograph the interior of the TL WMB at half full, when notified by the generator's supervisor, and also when it is completely full.

Note: **A photograph of a half filled TL WMB is not a requirement. It is, however, an excellent source of documentation.**

2.11.5 8x8x20 Sea/Land Container

Examination of the filling of a Sea/Land by a WPC or WCO once they have been prepared for filling is a routine requirement, and is to be performed on a monitoring basis in accordance with PT-0006. The results of the examination are to be documented in Section 2 of the "QUALITY L-LRW SEALAND/TL WMB EXAMINATION AT FILLING" (Attachment J) checklist. **At a minimum**, criteria for examination is to include the following:

a. Verify that a prohibited materials list has been attached to the Sea/Land in a visible location;

b. Verify that the Sea/Land is empty at start or new materials are from the same waste stream as materials already in Sea/Land;

c. Verify that the materials packaged conform in appearance to the materials listed on the Card 65-1;

d. Verify materials being packaged do not contain free liquids during any stage of filling the Sea/land;

e. Verify that the correct ME&CI checklists have been initiated and are correct to this point;

f. Verify the Sea/Land has sustained no damage in the form of holes and significant deformations during filling;

g. Verify the waste is tightly packed in the Sea/Land and the load weight appears balanced; and

h. Photograph the interior of the Sea/Land at half full, when notified by the generator's supervisor, and also when it is completely full.

Note: **A photograph of a half filled Sea/Land is not a requirement. It is, however, an excellent source of documentation.**

2.11.6 Sea/Land Filling with Baled Trash

Examination of trash bales once they have been baled and are staged just prior to loading in a Sea/Land container is a routine requirement and is to be performed 100% by a WPC or WCO and the results of the examination are to be documented on checklist QP-910315-3 (Rev 4), "QUALITY L-LRW TRASH BALE EXAMINATION AT FILLING" (Attachment P). Examine each bale for the following:

a. Each bale should have a minimum of six (6) bands or straps for binding.

b. Free liquids are prohibited. Examine bales carefully for pockets of water or liquids in the bags.

Note: Condensation in plastic bags is acceptable unless excessive.

c. No 2x4 greater than two (2) foot long is to be packaged in the bale.

d. Prohibited materials are not allowed in accordance with the prohibited materials list.

Note: Reject bale if prohibited materials or suspect items (i.e. asbestos) are present, and mark Card 65-1 accordingly.

e. Each bale must be identified on an RTR report as acceptable before it can be loaded.

f. Check all surfaces of bale while a Transportation operator turns the bale using a barrel grab lift truck.

g. Verify the Card 65-1 is complete and accurate for each bale.

h. Initial and date the Card 65-1 once the examined bale is accepted.

Note: If bale is designated wet and is set aside for drying, initial the card but note that bale is wet (unacceptable for shipment). Wet bales will be rechecked prior to packaging for shipment.

3.0 REFERENCES

3.1 DOE/EH-0256T, "DOE Radiological Control Manual"

3.2 ED-0001, "Event Notification and Reporting"

3.3 ES&H-1-1000, "Comprehensive Environmental, Occupational Safety and Health Program"

3.4 FEMP-2128, "FEMP Industrial Hygiene and Safety Manual"

3.5 NVO-325, "Nevada Test Site Defense Waste Acceptance Criteria, Certification, and Transfer Requirements"

3.6 PT-0005, "Packaging L-LRW in Drums for Offsite Shipment to the NTS"

3.7 PT-0006, "Packaging L-LRW into ISO Containers For Off Site Shipment"

3.8 PT-0007, "Packaging L-LRW in Metal Boxes For Off Site Shipment"

3.9 QP-6.04, "Qualification of Waste Package Certifiers"

3.10 QP-6.05, "Qualification of Waste Certification Officials"

3.11 QP-7.01, "Administration and Conduct of Surveillance Activities"

3.12 QP-12.04, "Certification of L-LRW Packages, Per-Load Inspection Through Loaded Transport Vehicle Inspection, for Shipment to the NTS"

3.13 QP-12.07, "Certification of Supporting Paperwork for Shipment of L-LRW to the NTS"

3.14 RC-RDA-006, "Radiological Survey Requirements for Radioactive Material Shipping and Receiving"

3.15 RM-0012, "Quality Assurance Program"

3.16 SOP-20-C-604, "Control and Utilization of Contaminated Trash Dumpsters"

3.17 SSOP-0023, "Deviation and Corrective Action Reports"

3.18 SSOP-0067, "Spill Incident Reporting and Cleanup"

4.0 ATTACHMENTS

4.1	Attachment A	Prohibited Materials List
4.2	Attachment B	Hold Tag, FS-F-3761 (11/15/93)
4.3	Attachment C	Leaker Inspection Types, referenced from PT-0007
4.4	Attachment D	Corrosion Inspection Types, referenced from PT-0007
4.5	Attachment E	Femp Surveillance Checklist, FMPC Q 2802 (Rev. 6/7/90)
4.6	Attachment F	Quality Certification Overview Checklist (Blank)
4.7	Attachment G	Quality Certification Overview Coversheet (Blank)
4.8	Attachment H	"Quality Certification Overview Checklist", Examination of Empty Drums Before Filling
4.9	Attachment I	"Quality Certification Overview Checklist", Examination of Empty WMB Before Filling
4.10	Attachment J	QUALITY L-LRW SEALAND/TL WMB EXAMINATION AT FILLING, QP-910315-1, Rev. 3 (5/10/94)
4.11	Attachment K	"Quality Certification Overview Checklist", Examination of Contaminated Trash Dumpster
4.12	Attachment L	"Quality Certification Overview Checklist", Examination of Drums at Filling
4.13	Attachment M	Card 65-1, Item Production/Certification/Identification, FS-F-1945-1
4.14	Attachment N	"Quality Certification Overview Checklist", Examination of WMB at Filling

4.15	Attachment O	QUALITY L-LRW PRE-BALED TRASH EXAMINATION, QP-931025, Rev. 1 (5/10/94)
4.16	Attachment P	QUALITY L-LRW TRASH BALE EXAMINATION AT FILLING, QP-910315-3, Rev. 4 (5/10/94)

PROHIBITED MATERIALS LIST

PROHIBITED MATERIALS LIST

MATERIAL	LIMIT/EXPLANATION
Transuranics	Limit: <100 nanocuries/gram. Acceptability of waste stream determined during characterization.
Hazardous Waste	Limit: Per Title 40 CFR 261 and Ohio Administrative Code 3745-54. No corrosives (acids with pH ≤2 and caustic materials with Ph ≥12). No ignitables (e.g. metal powders). No reactive materials (metal fines, explosives). No toxic materials (e.g. pesticides, poisons, certain metals. No leachable listed metals (e.g. arsenic, barium, cadmium, chromium, lead, mercury, selenium, silver, and cyanide). Notes: Lead can be found in hammer heads, scale weights, flashing materials, and counter weights. Watch for barium as barium chloride salts or barium chloride contaminated materials. Only "Rayovac" dry cell batteries are acceptable (other batteries contain unacceptable quantities of metals such as cadmium, lead, & mercury). Mercury is frequently found in instruments, electrical switches (including thermostats), and fluorescent lamp tubes. Silver can be found in photographic developer fluids, solder, and electrical contacts. No solvents Some examples include WD-40, adhesives, liquid paints, paint thinners, paint removers, or materials contaminated with solvents (e.g. rags saturated with solvents). Note: If a strong smell of solvents is present, call Health & Safety for verification.

PROHIBITED MATERIALS LIST

Free Liquids	Limit: Except for entrapped or residual liquids in well drained containers (0.5% of total volume maximum), no liquids including any that might separate from the waste under ambient temperature and pressure conditions (e.g. ice, excessive evaporation and condensation). Condensation in plastic bags and waste packages shall be considered entrapped liquids. Individual trash bales which are wet shall be excluded from shipment. Slightly soggy bales that occasionally drip should be limited to 30% to prevent excessive condensation within the container.
Particulates	Limit: Wastes packaged in unlined metal drums or ISO containers must contain no more than 1% weight of <10-micrometer particles or 15% weight of <200-micrometer particles. Some examples of fine particulates are black oxide, orange oxide, green salt, sump cakes, milled magnesium fluoride, dust collector residues, floor and pad sweepings, and soils.
Compressed gases	Limit: Defined by Title 49, CFR 173.300. However, all containers designed for compression, shall be assumed to exceed limit unless valve mechanism is removed, or in the case of aerosol cans, the can has an obvious puncture. Some examples of compressed gas containers include LP gas containers, oxygen containers, and aerosol cans. Typical aerosol cans may have containing paint, adhesives, cleaning and deodorizing agents, and personal care items.
Stabilization	Limit: Waste minimization shall be attained to the extent practicable by size reduction and efficient packaging.
Etiologic Agents	Limit: None allowed. Pathogens, infectious wastes or other etiologic agents. Potential source of this prohibited waste would be from Medical. Example include band aids, tongue blades, syringes, cotton balls or other materials stained with blood or other body materials, and outdated pharamaceuticals.

PROHIBITED MATERIALS LIST

Note: Restroom sanitary waste from the process area is to be packaged in green plastic bags, monitored, and disposed of as clean trash if within acceptable contamination limits.

Chelating Agents:

Limit: No greater than 1% by weight.

Chelating or complexing agents. Chelating agents form coordination compounds by offering two or more chemical bonds (through ligands) to a central metal ion. The most common chelating agent is EDTA. Other common chelating agents are aminopolyacteic acids. Excess chemicals from the on-site laboratory are the primary potential source. Wastes are to be evaluated for containment of chelating agents by Waste Characterization. Any exceeding the limit are identified on the MEF or RD/RC letter for exclusion from NTS shipments.

Polychlorinated Biphenyls

Limit: None allowed unless the concentration meets the municipal solid waste disposal limits. Reference 40 CFR 761.60.

Commonly called PCB's. Frequently found in capacitors and transformers. Light ballasts that are PCB free will be marked as such. Materials contaminated with PCBs may show signs of an oily residue. If PCB's are suspected, contact Waste Characterization.

Explosives and pyrophorics

Limit: None allowed.

Other than the commonly known explosives, laboratory hoods, bottles, and containers may contain small quantities of picric acid crystals which are highly explosive. Check labels on containers and RCRA evaluation results. Pyrophoric (self igniting) materials are commonly found in porous (spongy) uranium metals, and uranium fines such as fines from turnings and residue from grinding. Also prohibited are most all metal powders.

Note: This list was developed as an aid in identifying and recognizing prohibited materials. It is not to be used in lieu of NVO-325 waste acceptance criteria, or 40 CFR and 49 CFR requirements. Examples given are typical and are not intended to be all inclusive.

ATTACHMENT B
Page 1 of 1

HOLD TAG
FS-F-3761

HOLD
FOR QA/QC RELEASE

DO NOT REMOVE THIS TAG

TAG #: _____

FS-F-3761 (11/18/83)

HOLD FOR QA/QC RELEASE
DO NOT REMOVE THIS TAG

NAME:	BADGE NO.:
ISSUE DATE:	TELEPHONE NO.:

DESCRIPTION OF ITEM AND/OR ID NO.:

DESCRIPTION OF DEVIATION:

REPORT NO.:	TAG: of	DATE TAG REMOVED:

FS-F-3761 (11/18/83)

LEAKER INSPECTION TYPES

TABLE 2
LEAKER INSPECTION TYPES

TYPE	CHARACTERISTIC	CORRECTIVE ACTION
1	Material flowing from container and accumulation on, under or around container.	1. Notify supervisor and Radiological Control (RC). 2. Supervisor notify AEDO. 3. Stop or contain leak as directed by supervisor. 4. Record on inspection form that the container requires mitigation within 24 hours. 5. Complete additional cleanup as necessary. 6. Supervisor initiate an Occurrence Report (OR).
2	Material on container exterior only; no leakage of material on, under, or around container.	1. Record leak on inspection form. 2. Notify supervisor and RC. 3. Supervisor initiate an OR. 4. Supervisor review the completed inspection forms to prioritize containers for transfer to overpack staging area and subsequent mitigation.
3	Container exterior discolored/visible contamination; no material release.	1. Record condition on inspection form. 2. Notify supervisor and RC. 3. Supervisor schedule container for overpacking.

ATTACHMENT D
Page 1 of 1

CORROSION INSPECTION TYPES

TABLE 1
CORROSION INSPECTION TYPES

TYPE	CHARACTERISTIC	COULD CAUSE LOSS OF BOX INTEGRITY		CORRECTIVE ACTION
		YES	NO	
1	Holes, large dents, or large areas of corrosion that affect the structural integrity of the container or require the entire side to be painted	X		1. Notify Maintenance to patch. Overpack or repackage in another container. NOTE: Supervisors ensure that touchup or painting is completed. 2. Notify QA and MC&A of all repairs or repackaging of waste containers.
2	Heavy rust with areas of pitted metal flaking (> 18 square inches - hand size) and no holes present		X	1. HAZWATS scrape loose oxides and paint the area to be repaired.
3	Light surface rust with no pitting of the base metal		X	1. Wipe with masoline cloth or wash with soap and water, if needed to remove dirt. 2. Ship as is.

ATTACHMENT E
Page 1 of 1

FEMP SURVEILLANCE CHECKLIST
FMPC Q 2802 (REV. 6/7/90)

FEMP
SURVEILLANCE CHECKLIST

Report No: _____ Title: _____ Page 1 of 1

Date: _____ Project: _____

Quality Assurance Evaluator: _____ Organization: _____ Follow-Up tp Survey No. (If Applicable): _____

ITEM	SURVEILLANCE CHARACTERISTIC	SATIS-FACTORY	UNSATIS-FACTORY	REMARKS

FMPC Q 2802 (REV 6-7-90)

ATTACHMENT F
Page 1 of 2

QUALITY CERTIFICATION OVERVIEW CHECKLIST

QCO#: _____

1. Project/Task :	Location:
2. Verified By:	Date:

3.Char. No.	4. Evaluation Characteristic	5.Status Stamp & Date	6. General Remarks

7. Verifier Signature:	Date:
8. Quality Supervisor:	Date:

Page ___ of ___

ATTACHMENT F
Page 2 of 2

QUALITY CERTIFICATION OVERVIEW CHECKLIST
(CONTINUATION SHEET)

QCO #

3. Char. No.	4. Evaluation Characteristic	5. Status Stamp & Date	6. General Remarks

ATTACHMENT G
Page 1 of 1

QUALITY CERTIFICATION OVERVIEW COVERSHEET

ACTIVITY:	LOCATION:	QCO #:
COMMENTS:		
VERIFIER SIGNATURE:		DATE:
QUALITY SUPERVISOR:		DATE:

ATTACHMENT H
Page 1 of 1

QUALITY CERTIFICATION OVERVIEW CHECKLIST
EXAMINATION OF EMPTY DRUMS BEFORE FILLING

QCO#: _____

1. Project/Task : EXAMINATION OF EMPTY DRUMS BEFORE FILLING	Location:
2. Verified By:	Date:

3.Char. No.	4. Evaluation Characteristic	5.Status Stamp & Date	6. General Remarks
1.	Verify drums are free of holes and significant deformations.		
2.	Verify drums are not severely corroded with deep pitting and/or metal flaking rust. (per Table 1 /PT-0005)		
3.	Verify lids and rings are in good condition.		
4.	Verify drums are empty at start.		
5.	Verify there is no free liquid in drums.		

7. Verifier Signature:	Date:
8. Quality Supervisor:	Date:

ATTACHMENT I
Page 1 of 1

QUALITY CERTIFICATION OVERVIEW CHECKLIST
EXAMINATION OF EMPTY WMB BEFORE FILLING

QCO#:_____

1. Project/Task : EXAMINATION OF EMPTY WMB BEFORE FILLING	Location:
2. Verified By:	Date:

3.Char. No.	4. Evaluation Characteristic	5.Status Stamp & Date	6. General Remarks
	SERIAL# _____		
1.	Verify WMB is free of holes and significant deformations.		
2.	Verify WMB is not severely corroded with deep pitting and/or metal flaking rust. (per Table 1/PT-0007)		
3.	Verify lid to WMB is in good condition.		
4.	Verify there is no free liquid in WMB.		
5.	Verify WMB is properly prepared for filling in accordance with materials being packaged. (per PT-0007)		

7. Verifier Signature:	Date:
8. Quality Supervisor:	Date:

ATTACHMENT J
Page 1 of 1

QUALITY SEALAND/TL WMB EXAMINATION AT FILLING

CONTAINER NO:_____

REQUESTOR/GENERATOR:_____ LOCATION:_____

INITIAL TARE WEIGHT:_____lbs. DATE OF PREP:_____

SECTION 1 EXAMINATION OF CONTAINER PREPARATION	STAMP/INITIAL
1. Verify container is strong tight. (No holes, flaking paint or rust per QP-12.03)	_____
2. Verify container is properly prepared for filling in accordance with PT-0006 or PT-0007.	_____

****

SECTION 2 EXAMINATION OF CONTAINER FILLING

MATERIAL TYPE:_____

DATE FILLING COMPLETE _____

1. Verify Prohibited Materials list is prominently posted in packaging area and no prohibited items are packaged.	_____
2. Verify condition of container in accordance with procedures QP-12.03 and PT-0006 or PT-0007.	_____
3. Verify no free liquids are visible, nor is material saturated to the extent that seepage could be expected during handling and transport.	_____
4. Verify weight is evenly distributed and freeboard is minimized.	_____
5. Verify the Card 65-1 and/or correct ME&CI checklists have been initiated and are correct to this point.	_____

DEVIATION NOTED: NO YES DR# _____ Close Date:_____

Comments:_____

_____

_____

I certify the above items have been examined and are correct to the best of my knowledge in accordance with PT-0006 or PT-0007.

Signed: _____ Date:_____
(Quality Verification)

QP-910315-1, Rev. 3 (5/10/94)

ATTACHMENT K
Page 1 of 1

QUALITY CERTIFICATION OVERVIEW CHECKLIST

QCO#:_____

1. Project/Task : EXAMINATION OF CONTAMINATED TRASH DUMPSTER Location:			
2. Verified By:		Date:	
3.Char. No.	4. Evaluation Characteristic	5.Status Stamp & Date	6. General Remarks
	DUMPSTER#: _____ OWNER: _____		
1.	Verify dumpster is locked. (Sec 3.3.1)		
2.	Verify no trash has accumulated around the dumpster. (Sec 3.3.2) *Except segregated office trash "Green Bags". (Sec 8.2 - Note #2 under 8.2.6.1)		
3.	Verify trash is in a clear plastic bag. (Sec 8.2.1.3) *Large bulky items may be placed directly into dumpster. (Sec 8.2.4)		
4.	Verify bags are taped and secured. (Sec 8.2.1.5)		
5.	Verify no "Prohibited" items are in the dumpster.(Sec 8.1.1 & 8.1.1.1) Note: see figure 1 Prohibited Waste		
6.	Verify bags are not damaged. (Sec 8.2.5 & Note #1 under 8.2.6.1)		
7.	Verify bags are labeled with a permanent marker listing the building, office area, or project where the trash originated.(Sec 8.2.1.6 & Note #1 under 8.2.6.1)		
8.	Verify a "Prohibited Materials" list is posted on the dumpster.(Sec 3.5.1)		

7. Verifier Signature:	Date:
8. Quality Supervisor:	Date:

ATTACHMENT L
Page 1 of 1

QUALITY CERTIFICATION OVERVIEW CHECKLIST

QCO#:_____

1. Project/Task : EXAMINATION OF DRUMS AT FILLING		Location:	
2. Verified By:		Date:	
3.Char. No.	4. Evaluation Characteristic	5.Status Stamp & Date	6. General Remarks
1.	Verify a "Prohibited Materials" list is posted in area.		
2.	Verify drums are empty.		
3.	Verify materials packaged conform in appearance to materials listed on Card 65-1.		
4.	Verify material does not contain free liquids.		
5.	Verify waste has been characterized by WC and the proper paperwork accompanies the material determining it to be RCRA nonhazardous.		
6.	Verify waste is tightly packed in drums to either the weight capacity or remains at least three (3) inches below top of drum.		
7.	Verify drum has sustained no new damage in the form of holes and/or significant deformations.		
8.	Verify drum is free of rust. (per Table 1 PT-0005)		

7. Verifier Signature:	Date:
8. Quality Supervisor:	Date:

QCOFILDR.03

Page ___ of ___

ATTACHMENT M
Page 1 of 1

CARD 65-1, ITEM PRODUCTION/CERTIFICATION/IDENTIFICATION,
FS-F-1945-1

Revision 11/20/92

CARD 65-1 ITEM PRODUCTION/CERTIFICATION/IDENTIFICATION

INV. NO.:

P. O. NO.	SOURCE	CLASS	MATERIAL TYPE	LOT SEQUENCE NO.	DATE MO	DAY	YEAR	SHIFT	BADGE NO.	CONT. NO.	SERIAL NO.

SEAL NUMBER	SEAL DATE MONTH	DAY	YEAR

WASTE DESCRIPTION AND COMMENTS

PACKAGE TYPE	
PACKAGE SIZE	
PROJECT	

PACKAGE PHYSICAL CERTIFICATION	YES	NO
EMPTY CONTAINER AT START		
RUST HOLES OR DENTS		
MATERIAL IS AS CODED		
PROHIBITED MATERIALS		
LIQUIDS IN CONTAINER		
MINIMUM OF VOID SPACE		
PACKAGE SECURED		
DRAIN PLUG SECURED		
OVERPACK		
REPACK		

PLANT	PROD. MBA	BEF NO.
OCAR	SERV. NO.	GROSS WEIGHT
		TARE WEIGHT
		NET WEIGHT

GENERATOR SIGNATURE SUPERVISOR SIGNATURE DATE

FS-F-1945-1 (REV. 11/20/92)

Revision 12/19/88

CARD XX ITEM PRODUCTION/CERTIFICATION/IDENTIFICATION 127715

P. O. NO.	SOURCE	CLASS	MATERIAL TYPE	LOT SEQUENCE NO.	DATE MO	DAY	YEAR	SHIFT	BADGE NO.	PACKAGE NO.

SEAL NUMBER	SEAL DATE MONTH	DAY	YEAR

WASTE DESCRIPTION AND COMMENTS

PACKAGE TYPE	
PACKAGE SIZE	

PACKAGE PHYSICAL CERTIFICATION	YES	NO
EMPTY CONTAINER AT START		
RUST HOLES OR DENTS		
MATERIAL IS AS CODED		
PROHIBITED MATERIALS		
LIQUIDS IN CONTAINER		
MINIMUM OF VOID SPACE		
PACKAGE SECURED		
DRAIN PLUG SECURED		

PLANT	PROD. MBA
PLANT TO	MBA TO

GROSS WEIGHT

TARE WEIGHT

NET WEIGHT

GENERATOR SIGNATURE SUPERVISOR SIGNATURE DATE

FMPC-CONT-1945-XX (REV 12/19/88)

ATTACHMENT N
Page 1 of 1

QUALITY CERTIFICATION OVERVIEW CHECKLIST

QCO#:_____

1. Project/Task : EXAMINATION OF WMB AT FILLING	Location:
2. Verified By:	Date:

3.Char. No.	4. Evaluation Characteristic	5.Status Stamp & Date	6. General Remarks
	Serial:_____		
1.	Verify a "Prohibited Materials" list is posted in area.		
2.	Verify WMB is empty at start or materials are from the same waste stream as those being added.		
3.	Verify materials packaged conform in appearance to materials listed on Card 65-1.		
4.	Verify material does not contain free liquids.		
5.	Verify waste has been characterized by WC and the proper paperwork accompanies the material determining it to be RCRA nonhazardous.		
6.	Verify waste is tightly packed in WMB to either the weight capacity or the WMB is full. (whichever comes first)		
7.	Verify WMB has sustained no new damage in the form of holes and/or significant deformations.		
8.	Verify WMB is free of rust. (per Table 1 PT-0007)		

7. Verifier Signature:	Date:
8. Quality Supervisor:	Date:

ATTACHMENT O
Page 1 of 1

QUALITY L-LRW PRE-BALED TRASH EXAMINATION
QP-931025, REV. 1 (5/10/94)

QUALITY L-LRW PRE-BALED TRASH EXAMINATION

Dump. #/ Location	# Bags	# Bags Labeled	Prohibited Items (PI)	Disposition of PI Found	Date	Verifier Initials	Bale #

I hereby certify that the above information is correct to the best of my knowledge.

Signed: _____ Date: _____
Quality Verification

QP-931025, REV. 1 (5-20-94)

ATTACHMENT P
Page 1 of 1

QUALITY L-LRW TRASH BALE EXAMINATION AT FILLING

SEALAND NO. _____ FILLING LOCATION: _____

NOTE: All bales loaded for shipment must be listed on and RTR report as ACCEPTED!

BALE NUMBER	ACCEPTED	REJECTED	ACCEPTED	D.R. NO.	COMMENTS

Comments: _____

I hereby certify that the above checklist has been completed and witness that the above items are correct to the best of my knowledge.

Signed : _____ Date : _____
(Quality Verification)

000953

FERNALD ENVIRONMENTAL RESTORATION MANAGEMENT CORPORATION		DOCUMENT NUMBER: QP-12.07
QUALITY ASSURANCE PROCEDURE	SUBJECT: CERTIFICATION OF SUPPORTING PAPERWORK FOR SHIPMENT OF L-LRW TO THE NTS	REVISION: 1
		Page 1 of 62
	AUTHORIZED: (VP, Performance/Quality Assurance)	Effective Date: 02/27/95

NON-CONTROLLED COPY

1.0 SCOPE

This procedure establishes a detailed method of examining the support paperwork used to certify Low-Level Radioactive Waste (L-LRW) and packages for shipment to the Nevada Test Site (NTS).

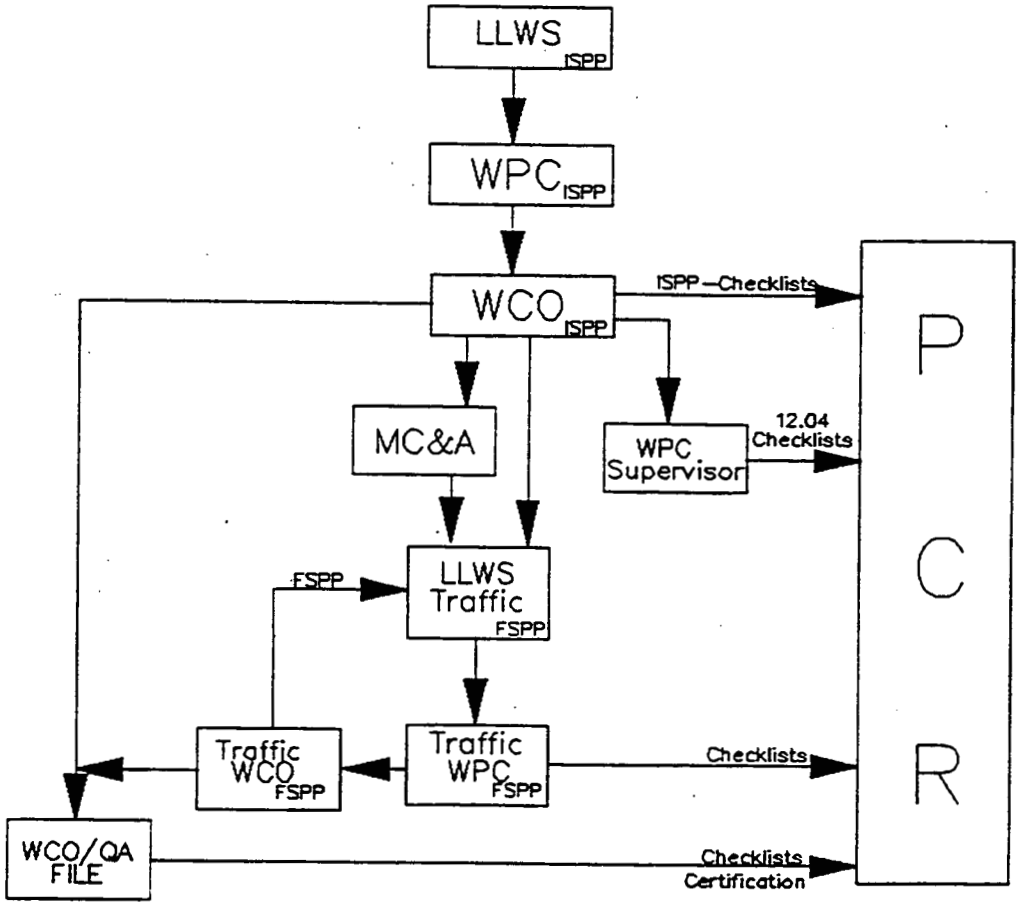

2.0 PROCEDURE

2.1 Industrial Health and Safety Requirements

2.1.1 At a minimum, safety glasses with side shields and leather safety shoes which cover the complete foot are to be worn by all personnel at all times while in the process area of the Fernald Environmental Management Project (FEMP).

2.1.2 Determination of requirements for proper safety equipment to be utilized by each employee working with waste material is made in accordance with the specific project work plan (WP), the FEMP-2128, "FEMP Industrial Hygiene and Safety Manual" and DOE/EH-0256T, "Department Of Energy (DOE) Radiological Control Manual."

2.1.3 Supervisors and managers are responsible for making required safety equipment available to all workers within their area of responsibility and seeing that it is being used in accordance with the Environmental Safety & Health (ES&H) procedure ESH-1-1000, "Comprehensive Environmental, Occupational Safety and Health Program."

2.2 Event Notification and Reporting Requirements

2.2.1 Any circumstances of event which could have resulted in an intake of radioactive materials shall immediately be reported to supervision. In the supervisor's absence the Assistant Emergency Duty Officer is to be notified in accordance with ED-0001, "Event Notification and Reporting."

2.2.2 Any personnel involved in a spill incident must report to Medical Services before the end of the shift on the day of the event to submit a urine sample and again at the start of their shift the next scheduled work day.

2.2.3 Spill incidents involving Resources Conservation and Recovery Act (RCRA) materials must be reported to the Spill Reporting Advisor in Environmental Compliance according to Site Operating Procedure (SOP) FEMP-503, "FEMP Spill Incident Reporting and Cleanup."

2.3 Acronyms

CFR	Code of Federal Regulations
CWCO	Chief Waste Certification Official
DOT	Department of Transportation
DOE	Department of Energy
DR	Deviation Report
ES&H	Environmental Safety & Health
FEMP	Fernald Environmental Restoration Project
FSPP	Final Shipping Paperwork Package
ISPP	Initial Support Paperwork Package
LA	Logistics Administration
LAN	Local Area Network
L-LRW	Low-level Radioactive Waste
L-LWS	Low-level Waste Scheduling
LQ	Limited Quantity
LSA	Low Specific Activity
MC&A	Material Control & Accountability
ME&CI	Material Evaluation & Container Information
MEF	Material Evaluation Forms
NTS	Nevada Test Site
PCR	Permanent Certification Record
PS&DD	Package Storage & Disposal Data
QA	Quality Assurance
RCRA	Resources Conservation and Recovery Act
RCT	Radiological Control Technician
RIMIA	Receiving Incoming Materials Inspection Area
RQ	Reportable Quantity
SOfNM	Shipping Order for Nuclear Material
SOP	Site Operating Procedure
TL WMB	Top Load White Metal Box
WAC	Waste Acceptance Criteria
WCO	Waste Certification Official
WCPP	Waste Certification Program Plan
WMB	White Metal Box
WP	Work Plan
WPC	Waste package Certifier
WPM	Waste Programs Management
WSR	Waste Summary Report

2.4 Responsibilities

2.4.1 Manager of Waste Programs Quality Assurance (QA)/Chief Waste Certification Official (CWCO) - Responsible for managing the activities of both the WCOs and the WPCs in such a way as to maintain independence from those who have direct responsibility for performing waste generation activities and to maintain compliance with the NTS and NVO-325. CWCO responsibilities include:

- Signing the Fernald Environmental Restoration Management Corporation (FERMCO) application signature page certifying that the information is correct and that the waste stream(s) will meet the NTS Waste Acceptance Criteria (WAC) upon implementation of the Waste Certification Program Plan (WCPP);

- Ensuring certification procedures are prepared and used for waste certification activities;

- Ensuring the performance of internal audits, inspections, surveillance and overviews;

- Ensuring timely identification of deficiencies and effective corrective action; and is also

- Responsible for assuring that alternate WCOs and WPCs are properly trained and qualified to the requirement of NTS Defense WAC as discussed in NVO-325.

2.4.2 Alternate Waste Certification Official (WCO) - Responsible for performing all activities addressed in this procedure assuring all documentation produced by supporting organizations adheres to their most current procedures and that the procedures comply with the requirements of NVO-325.

2.4.3 Waste Package Certification Supervisor - Responsible for directing the activities of the WPCs in assuring all applicable inspections are conducted and all data (checklists, etc...) is compiled to assist the WCO in the certification process.

2.4.4 Waste Package Certifier (WPC) - Responsible for performing all activities specified in this procedure assuring all documentation produced by supporting organization adhere to their most current procedures and are available to assist the WCO in the certification process.

2.4.5 Waste Characterization - Responsible for providing documentation about waste characterization activities, developing procedures outlining methods which demonstrate documented compliance with Title 40, CFR-261 through CFR-268 and provide information required for the DOE Order 5800.2A performance assessment of the FEMP.

2.4.6 Waste Programs Management (WPM) - Responsible for providing documentation from procedures for performing waste generation activities and conducting waste management programs in accordance with all applicable requirements as referenced in NVO-325.

2.4.7 Low-Level Waste Scheduling (L-LWS) Supervisor - Responsible for collecting and/or referencing the correct paperwork documentation required by the WPC and WCO to successfully certify the paperwork packages of L-LRW material for shipment to the NTS.

2.4.8 Low-Level Waste Scheduling at Traffic - Responsible for providing documentation per procedure and conducting transportation activities in such a manner as to comply with all Department of Transportation (DOT), DOE, and NTS regulations.

2.4.9 Material Control & Accountability (MC&A) - Responsible for providing documentation per procedure to accurately identify, control and account for the materials packaged for shipment.

2.4.10 Radiological Control Technician (RCT) - Responsible for providing documentation per procedure to establish the methods for radiologically surveying incoming and outgoing radioactive material packages and conveyances at the FEMP.

2.5 Training Requirements

2.5.1 All WPCs and WCOs who verify support paperwork used to certify shipments of L-LRW to the NTS must be qualified, trained and certified in the following:

a. RM-0012, "Everyone's Quality Assurance Program Description";

b. NVO-325, "Nevada Test Site Defense Waste Acceptance Criteria, Certification and Transfer Requirements";

c. The "Waste Certification Program Plan" in accordance with Procedure QP-6.04, "Qualification of Waste Package Certifiers" for WPCs or in QP-6.05, "Qualification of Waste Certification Officials" for WCOs;

d. Card 65-1, "Item Production/Certification/Identification" training;

e. QA procedure QP-12.03, "Certification of Waste Containers and Filling with L-LRW for Shipment to the NTS";

f. QA procedure QP-12.04, "Certification of L-LRW Packages, Pre-Load Inspection Through Loaded Transport Vehicle Inspection, for Shipment to the NTS"; and

g. QA procedure QP-12.07, "Certification of Supporting Paperwork for Shipment of L-LRW to the NTS."

2.6 General Certification Requirements

2.6.1 Only materials approved by the NTS, Waste Characterization, and Waste Programs Management will be shipped. It is the responsibility of the CWCO to make pertinent information pertaining to approved materials available to all WPCs and WCOs.

2.6.2 WCOs may perform activities assigned to WPCs by authority of NVO-325.

2.6.3 Materials prohibited by NVO-325 and listed on the "PROHIBITED MATERIALS LIST" (Attachment A) are not to be included in a shipment.

2.6.4 Only exclusive use closed transport will be used to ship L-LRW to the NTS.

2.6.5 Maximum gross weights, **not to be exceeded**, for the most frequent used containers are as follows:

a.	48 or 55 gallon drum	1200 lbs.
b.	85 gallon drum	1000 lbs.
c.	85 gallon overpack drum	1200 lbs.
d.	Lock Pin 4x4x7 white metal box (WMB)	6000 lbs.
e.	Electro●Panel 4x4x7 WMB	*8000 lbs.
f.	Nominal 4x4x7 WMB	8000 lbs.
g.	8x8x20 Top Load (TL WMB)	**42000 lbs.
h.	8x8x20 Sea/Land container	**42000 lbs.

*Note: E. has been reevaluated to 8000 lbs.

Note: **A waiver on the 42000 lbs. must be approved in writing by the manager of Traffic division of Inventory Control & Traffic and a WCO. A copy of the letter will be attached to the pre-load checklist when the paperwork is prepared, in accordance with QA procedure QP-12.07.

2.6.6 Necessary change notices issued to this procedure, including all checklist attachments, must be approved by the CWCO.

2.6.7 Changes made to the checklists generated by this procedure must have a single line drawn through the original entry and the new entry initialed and dated.

2.6.8 Checklists generated for surveillance or routine activities and Overview Reports are controlled documents and are to be forwarded to the WCO for review and use in certification. These documents ultimately become part of the Permanent Certification Record (PCR).

2.6.9 If during any phase of the verification and certification processes the WPC or WCO observes missing information or reoccurring deficiencies to procedure, a Deviation Report (DR) is to be prepared by the observer in accordance with procedure SSOP-0023, "Deviation and Corrective Action Report Processing." Successful certification of a shipment can not be achieved until all DRs are closed by their originators or a designee.

2.7 Verification of the Initial Support Paperwork

Verification of the Initial Support Paperwork Package (ISPP) is to be performed by a WPC after the filling of the containers. Filling of the containers may have been observed in accordance with QA procedure QP-12.03. A verification inspection of the ISPP shall be performed before the certification inspection by a WCO begins.

2.7.1 The L-LWS coordinator completes the ISPP folder in accordance with SOP 50-C-112, "Preparation of Documentation for Shipment of L-LRW to the NTS" and delivers it to the WPC. The WPC notes the date and time of receipt on the outer cover of the folder. The WPC completes checklist QP-921229 (Rev. 4), "QUALITY INITIAL SPP EXAMINATION FOR VERIFICATION" (Attachment B) while examining the ISPP folder for completeness and accuracy.

2.7.2 The WPC sorts the contents of the ISPP folder into three (3) groups:

a. Group I consists of computer generated documents which the L-LWS coordinator transposes from the group II documents. Original signed Group I documents travel with the shipment to the NTS. Group I includes:

1. Package Storage & Disposal Data (PS&DD) sheet (Attachment C);
2. Tally Sheet (Attachment D);
3. Curie Sheet (List of the containers with weights and curies for each, grouped by DOT marking category) (Attachment E); and the
4. Circle Copy (List of containers with weights and required DOT markings) (Attachment F).

b. Group II consists of documents which provide verification of compliance with NVO-325, Title 40-CFR, Title 49-CFR, and the Ohio Administrative Code. All group II documents are to be handled as QA records and will become part of the PCR. These documents must be signed and dated by qualified personnel. Changes are to be made by responsible and knowledgeable individuals who work for the department having ownership of the document. Determination of the qualification of individuals to sign or make changes to documents shall be made to the extent possible on the basis of training records, organizational responsibilities, and job experience. Group II documents include:

1. Card 65-1 Item Production Certification Identification (Attachment G);
2. "Initial Dose Rate" Radiological Survey Report, form (Attachment H);
3. "Shipping Order for Nuclear Material" (SOfNM) form (Attachment I) initiated by the L-LWS coordinator;
4. Factor assay data, either a letter or printout from MC&A listing the correct factor assay for a particular waste;
5. Waste Summary Report (WSR) (Attachment J) completed by the L-LWS coordinator referencing RCRA letters, Material Evaluation Forms, (MEFs) and the NTS WAC forms which apply to the shipment. All referenced documents must be on file in the QA department.

Note: Copies of RCRA letters, applicable MEFs, and WACs are required as part of the ISPP folder in the first shipment for which they apply.

Note: Waste stream 002 (construction/removal action waste) requires as part of every ISPP folder a copy of the completed WAC form.

6. Weight Ticket, (Attachment K) when the shipment contains Sea/Land or TL WMB packages;
7. Applicable Material Evaluation & Container Information (ME&CI) checklists for Waste Streams 001 and 002, complete with signatures showing the evaluated material to be acceptable; and the
8. Computer upload sheet.

c. Group III consists of worksheets used by any individual involved in the development of the ISPP coinciding with the shipment.

2.7.3 Pull the QA department copy of the referenced RCRA letter to determine what other documents are required to show traceability and characterization of the materials packaged in the shipment.

2.7.4 Compare data on the computer generated group I documents to data transposed from the group II documents verifying that it corresponds in all the following cases:

2.7.4.1 Verify the "initial dose rate" Radiological Survey Report lists the same packages as those in the shipment, is signed and dated by qualified radiological personnel, and is within the following acceptable limits:

- Beta/Gamma radiation levels shall not exceed 200 millirem/hour measured externally at the surface of the container.

Note: 200 millirem/hour may be increased to 1000 millirem/hour if conditions for exclusive use closed transport are met as specified in Title 49 CFR 173.441 (1) (i-iii).

- Second radiation readings are to be taken or calculated externally at one (1) meter from the surface of the container in accordance with 49 CFR 173.331 and ES&H procedure RC-RDA-006, "Radiological Survey Requirements for Radioactive Material Shipping and Receiving."

2.7.4.2 Acceptable packages must have the same radioactive values listed on the group I documents as MC&A's factor assay letter or printout and must be within the following limits for each level:

a. Limited Quantity (LQ), if the surface dose rate is equal to or less than 0.5 millirem/hour and the U-235 content is less than or equal to 15 grams;

b. **Low Specific Activity** (LSA), if the surface dose rate exceeds 0.5 millirem/hour or the U-235 content exceeds 15 grams;

c. **Reportable Quantity** (RQ), if the package is equal to or exceeds the following listed limits for the applicable Radionuclides in accordance with 49 CFR 172.101:

Thorium-228	.01	curie
Thorium-229	.001	curie
Thorium-230	.01	curie
Thorium-231	100	curie
Thorium-232	.01	curie
Uranium	.1	curie

2.7.4.3 Verify the factor assays on MC&As letters and printout are within the following parameters. When the U235 is greater than 1% the grams of U235 can not exceed 100 for any one single container listed. **This assay parameter must be before overpacking. (e.g. per drum)**

2.7.4.4 Verify there is one (1) Card 65-1 per package in the ISPP folder. This card has been historically referred to as the W-65 Card. Verify the signatures on the Card 65-1 are individuals who have received Card 65-1 training, NVO-325, and WCPP training. An up-to-date training list is available through the Waste Programs QA Certification office.

Note: This requirement will be waived for cards completed prior to 1/1/92.

a. Supervisors who sign Card 65-1s for newly generated construction rubble containers (waste stream 002) must be trained; however, training for the generator is optional.

b. In the case of c iners overpacked into a larger container, t original Card 65-1s do not require modificatic A new card will be issued for the entire over and will specify the new weights, list al terial packaged in the overpack containe d their lot code number. When available, t original cards provide a historical record here the containers were originally filled should be included in the ISPP folder.

c. In the case of material being added to the container, a notation identifying the material added and identification on the container from which it was taken must be made to the original Card 65-1. It is not necessary for a new card to be issued providing the original card is complete and comprehendible to the WPC and WCO.

d. When the original Card 65-1 is unavailable, the following are acceptable:
- a duplicate card,
- a legible xerox copy of the card,
- documentation from MC&A, or a
- QA surveillance or overview report.

e. Legacy boxes must be accompanied by documentation and verification as specified in the Legacy White Metal Box and Sea/Land Container Task Management Plan dated January 10, 1994.

2.7.4.5 Compare the Card 65-1 a st the PS&DD sheet for:

a. package serial/ide fication number;
b. material type;
c. material descriptic
d. number of packages; nd
e. package descriptior

2.7.4.6 Compare the Card 65-1 against the Tally Sheet for:

a. lot/sequence number; and
b. gross, tare and net weights.

2.7.4.7 The packaged date on the PS&DD sheet should reflect the most current date, either the date the Card 65-1 was signed by the supervisor or the "package end date" on the ME&CI checklist. For legacy waste the date of Waste Characterization's verification form will be used when ME&CI checklists are not applicable.

2.7.4.8 Shipments which have been characterized using procedure SOP 20-C-625, "Evaluating L-LRW Bulk Waste Streams for Shipment" and appropriate ME&CI checklists have been completed, verify the checklists are completed as follows:

a. Sec. 1. All questions have been answered correctly for each item relative to the material covered by the checklist.

b. Sec. 1. Questions 1-8 have not been checked inappropriately indicating the waste does not meet acceptable criteria.

Note: Information in Section I pertains to the evaluation of each item of waste in the container and not the total container of waste.

e. Sec. II Question 1 material description should provide a complete description of all waste in the container and also the original source if known.

f. Sec. II Questions 2-7 all information is included and signatures with dates reflect qualified and authorized individuals.

g. Sec. II Approvals by supervisor are authorized and dated.

h. Sec. II Approval by L-LRW Packaging Support is to approve the correctness of filling out the checklist and also approval of the waste into the waste stream.

2.7.5 If a DR against the container and/or contents being shipped has been issued, make sure it has been closed out by the originator or designee per SSOP-0023. All existing DRs and their status are accessible through the Quality Database located on the computer Local Area Network (LAN) system.

2.7.6 Compare material descriptions and source information on the Card 65-1 against RCRA determination letters and/or MEFs from Waste Characterization to ensure that only materials approved for release are included in the shipment.

2.7.7 For waste characterized by MEFs which require verification forms with container inventory attachment forms and residues (006 waste stream) listed on inventory attachments generated by MC&A, verify the lot code for each container in the shipment is represented on one of these inventory lists.

2.7.8 For shipments containing either Sea/Land or TL WMB packages, a QP-910315-1 Rev.3, "QUALITY SEALAND/TL WMB EXAMINATION AT FILLING" (Attachment L) checklist, which was completed in accordance with QA procedure QP-12.03 by a WPC or WCO at the time the container was filled, should be matched to the shipment referenced by the container number. Attached to the checklist should be, a copy of the Card 65-1 and pictures of the container at half filled and full. This information is held on file in the WPC supervisor's office until the ISPP folder is ready for verification and is used to verify if or when the containers were inspected and approved.

2.7.9 For each TL WMB or Sea/Land in the shipment, complete Sec I of the QP-880930-1 (Rev. 5), "QUALITY PRE-LOADING PACKAGE INSPECTION FOR SEALANDS /TL WMBs" (Attachment M) checklist and add to the ISPP folder.

2.7.10 Record the date verification is completed and any nonconforming conditions found with the paperwork in the Quality Database "QUALITY CERTIFICATION L-LRW Shipment Status Log" (Attachment N) on the computer LAN system. Return any deficient ISPP folder to the L-LWS coordinator for resolution.

2.7.11 Initial and log the time and date the verification is completed on the outside cover of the ISPP folder.

2.7.12 The signing of the completed "QUALITY INITIAL SPP EXAMINATION FOR VERIFICATION" checklist determines the ISPP to be verified acceptable. The ISPP folder is then forwarded to a WCO for certification.

2.8 Certification of the Initial Support Paperwork

The certification inspection of the ISPP is to immediately follow the verification and must be completed before pre-load activities as detailed in QA procedure QP-12.04 can begin. Certification of the ISPP can only be completed by a qualified WCO who has been approved by the NTS.

2.8.1 Complete the QP-881115-2 (Rev. 5), "QUALITY INITIAL SPP EXAMINATION FOR CERTIFICATION" (Attachment O) checklist. Items to be checked are consistent with those checked by the WPC. If the shipment is unusually complex or not routine, a second WCO may be asked to check the ISPP and will either fill out a new checklist, or countersign the first WCO's checklist. The second check need only include as many items as deemed necessary to provide confidence that the ISPP is acceptable.

2.8.2 Sign and date the PS&DD sheet signifying that the paperwork and respective waste is acceptable. The certified paperwork is ready for forwarding to MC&A and initiation of the shipment begins.

2.8.3 Complete Sec. 1 and 2 of the QP-890601-1 (Rev. 3), "QUALITY FINAL SPP EXAMINATION FOR CERTIFICATION" (Attachment P) checklist.

2.8.4 Initial and log the date and time the ISPP was certified on the cover of the ISPP folder. This folder with all times and dates logged on the cover will become the PCR folder, when certification is complete. The PCR is locked in a fire-proof cabinet in the QA office. PCRs are periodically removed from the cabinet due to space constraints and transferred to the Records Service Center for permanent storage.

2.8.5 Check the computer upload sheet by comparing it with the PS&DD sheet for completeness and accuracy. This task may be delegated to another individual by the WCO. Initial and date the upload sheet, then notify the L-LWS coordinator that the upload is ready. The L-LWS coordinator is responsible for electronically transmitting the data to the NTS.

2.8.6 Distribute ISPP copies as follows:

1. QA file at the L-LWS traffic office:

   a. incomplete "QUALITY FINAL SPP EXAMINATION FOR CERTIFICATION" checklist;
   b. one (1) blank copy of the "Certification Statement" (Attachment Q);
   c. the "original" signed PS&DD sheet; and
   d. any unique document originals requested by the NTS to accompany the shipment.

2. WPC supervisor's office:

   a. copy of the signed PS&DD sheet;
   b. copy of the Tally Sheet;
   c. copy of the Circle Copy; and the
   d. incomplete "QUALITY PRE-LOADING PACKAGE INSPECTION FOR SEALAND/TL WMBs" checklist, when applicable. (see 2.7.7)

3. MC&A:

   a. copy of the signed PS&DD sheet;
   b. copy of the Tally Sheet;
   c. copy of the Curie Sheet;
   d. copy of the Circle Copy;
   e. copy of the "initial dose rate" Radiological Survey Report, specific to the shipment; and the
   f. incomplete SOfNM form.

   Note: Documents from the ISPP required by MC&A, are delivered to the designated recipient within the group. The time of transmittal is recorded on the ISPP folder and logged into the Quality Database on the computer LAN System.

4. L-LWS traffic office:

   Fax copies of documents sent to MC&A, with the exception of the "initial dose rate" Radiological Survey Report and SOfNM, to the traffic office (#6790).

5. PCR (Remaining documents in ISPP folder):

   a. copy of the signed PS&DD sheet;
   b. copy of the Tally Sheet;
   c. copy of the Curie Sheet;
   d. copy of the Circle Copy;
   e. copy of the "initial dose rate" Radiological Survey Report, specific to the shipment;
   f. Card 65-1s;
   g. Factor assay data, either a letter or printout from MC&A listing the correct factor assays for the shipment;
   h. the original WSR;
   i. copies of RCRA letters, the ME&CI checklists, and WAC form, when applicable;
   j. completed "QUALITY INITIAL SPP EXAMINATION FOR VERIFICATION" checklist;
   k. completed "QUALITY INITIAL SPP EXAMINATION FOR CERTIFICATION" checklist;

l. all group III documents; and the
m. Computer upload sheet.

Note: The PCR is not complete at this time (see 2.13.2.2 and 2.14.4.2).

2.8.7 Record the date ISPP certification is completed and any nonconformances found in the Quality Database on the computer LAN system. Return any deficient ISPP folders to the WPC for resolution.

2.9 Pre-Load Inspection of staged Packages

The pre-load inspection is performed by a WPC on packages staged for a shipment in accordance with QA procedure QP-12.04 as soon as the ISPP has been certified and the shipment released for loading. An NV-211 label (Attachment R) is affixed to each package at the completion of this inspection if the package meets all the criteria of NVO-325.

2.10 VERIFICATION OF TRAILER ENVELOPE FOR VAN SHIPMENTS

Verification of the trailer envelope for a van shipment is best completed before the packages are loaded. At loading, the envelope is affixed to the last package in the trailer while the doors are still open, then the doors are closed and the approved DOT seal is installed. If this is done, the trailer does not has to be reopened before shipping. If time does not permit this envelope being prepared before loading, a temporary QA seal may be affixed to the doors. The information in the envelope may be checked along with the rest of the final paperwork, the same as for flatbed shipments. The temporary seal is removed, the envelope affixed and the approved DOT seal installed at the final trailer inspection. Steps for verifying the trailer envelope are:

2.10.1 The WPC and WCO at the L-LWS traffic office, receive the brown "trailer envelope" containing a copy of the PS&DD sheet, Tally Sheet and Curie Sheet along with the permanent DOT seal from the L-LWS traffic coordinator. The contents of the envelope needs to be examined by both WPC and WCO to verify they are correct and coincide with the rest of the final shipping paperwork.

2.10.2 The verified envelope and the permanent DOT approved seal are given to the WPM Waste Transportation supervisor who will be coordinating the loading process.

2.10.3 The WPM Waste Transportation supervisor affixes the envelope to the last package in the van at loading and the permanent DOT seal on the rear doors in the presents of a WPC in accordance with QA procedure QP 12.04.

2.11 Certification of NV-211 Labels

The certification of NV-211 labels must be performed by a WCO during the loading process to assure one (1) label is in place on each package at the time of loading.

2.11.1 The WCO checks all packages to assure each has a properly signed and dated NV-211 label and is ready to load.

2.11.2 The WCO signs and dates a "Statement of Compliance" (Attachment S) only when certain the check is thorough and accurate.

Note: If the WCO is interrupted while checking NV-211 labels a complete recheck is required prior to signing the Statement of Compliance.

2.11.3 The original signed and dated Statement of Compliance is forwarded to the WCO who will be performing the certification of the final shipping paperwork.

2.12 Verification of the Final Shipping Paperwork

Verification of the Final Shipping Paperwork Package (FSPP) is performed by a WPC at the L-LWS traffic office after the transport trailer is loaded and has been staged outside the gate at Receiving Incoming Materials Inspection Area. (RIMIA) At this time, all package inspection checklists should be complete in accordance with QA procedure QP 12.04 and any DRs closed out.

2.12.1 The WPC receives the FSPP from the L-LWS traffic coordinator at the time the shipment is scheduled to ship. Using the QP-880731-1 (Rev. 4), "QUALITY FINAL SPP EXAMINATION FOR VERIFICATION" (Attachment T) checklist, the "Bill of Lading" (Attachment U), and the SOfNM are compared to verify the following:

a. Shipment number;
b. Bill of Lading number;
c. Shipping Order number;
d. date prepared;
e. gross wt. and net wt.;

f. E.T.A.;
g. seal number; and
h. LSA/LQ, RQ.

2.12.2 Verify the "L-LRW SHIPMENT CHECKLIST & NTS NOTIFICATION" (Attachment V) form has been completed by Transportation personnel while the trailer was being loaded. The form must be complete with all required signatures present.

2.12.3 Verify that a RCT has surveyed the trailer, "empty before loading" as well as "outgoing," and recorded the results of both on separate "VEHICLE RADIATION MONITORING REPORT" (Attachment W) forms and the Radiological Survey Report form assuring that all results are within specification.

2.12.4 Verify that a RCT has surveyed the packages, "initial dose rate" as well as "smears," and recorded the results on separate Radiological Survey Report forms assuring that all results are within specification.

2.12.5 Verify that a trailer inspection has been conducted for the empty trailer prior to having been unhooked from the tractor and a copy of the "Preliminary Visual Trailer Inspection" (Attachment X) form is included with the paperwork.

2.12.6 Verify the information on the "OFF-SITE LOADING TIE-DOWN INSPECTION - VEHICLE INSPECTION" (Attachment Y) form is correct and consistent with the Bill of Lading and the SOfNM.

2.12.7 Verify a copy of the "QUALITY L-LRW TRAILER EXAMINATION AT LOADING" (Attachment Z) checklist, coinciding with the shipment, has been faxed from the WPC supervisors office, making sure the seal number(s) matches the one(s) on the package.

2.12.8 Verify the packages listed on the Curie Sheet coincide with the specific shipment.

2.12.9 Verify the packages listed on the Circle Copy coincide with the specific shipment.

2.12.10 Verify that two (2) envelopes are included in the package from the L-LWS traffic coordinator:

a. The first envelope is the brown "trailer envelope" containing a copy of the PS&DD sheet, Tally Sheet, and Curie Sheet.

Note: This envelope may already have been processed prier to loading. (see 2.10)

b. The second envelope is the white "driver envelope" containing a copy of the PS&DD sheet, the Curie Sheet and the white copy of the weight ticket with the yellow copy of the weight ticket attached to the outside of the envelope.

2.12.11 Verify that a complete driver instruction package is included in the FSPP folder from L-LWS traffic office.

Note: If the shipment contains either a Sea/Land or TL WMB package, two (2) extra radioactive placards will be added to the drivers package by the WPC.

2.13 Final Trailer/Vehicle Examination

A WPC or WCO must examine the loaded trailer/vehicle and complete the QP-880801-1 Rev. 4, "QUALITY L-LRW FINAL TRAILER/VEHICLE EXAMINATION" (Attachment AA) checklist in accordance with QP-12.04 before the WPC can complete the verification of the FSPP.

2.13.1 When the final trailer/vehicle examination is complete, the WPC returns to the L-LWS traffic office to complete verification of the FSPP. The WPC verifies the shipment is ready to ship by signing and dating the "QUALITY FINAL SPP EXAMINATION FOR VERIFICATION" checklist.

2.13.2 Distribute paperwork copies as follows:

1. FSPP folder to the WCO located at the L-LWS traffic office:

   a. original "Bill of Lading;
   b. original signed SOfNM;
   c. original "L-LRW SHIPMENT CHECKLIST & NTS NOTIFICATION";
   d. all "VEHICLE RADIATION MONITORING REPORTS";

e. all Radiological Survey Reports;
f. the original and one (1) copy of the "Certification Statement";
g. "OFF-SITE LOADING TIE-DOWN INSPECTION VEHICLE INSPECTION" form;
h. field check copy of the Tally Sheet;
i. driver envelope with weight ticket on outside;
j. two (2) extra "Radioactive" placards;
k. the original and one (1) copy of the "Statement of Compliance";
l. copy of the "QUALITY FINAL SPP EXAMINATION FOR VERIFICATION" checklist;
m. copy of the "QUALITY L-LRW FINAL TRAILER/VEHICLE EXAMINATION" checklist; and
n. copy of the "QUALITY L-LRW TRAILER EXAMINATION AT LOADING" checklist.

2. PCR:

a. copy of the signed Bill of Lading; and
b. copy of the signed SOfNM.
c. completed original "QUALITY PRE-LOADING PACKAGE INSPECTION FOR (appropriate container type)";
d. field copy of the Circle Copy with a copy of the PS&DD and Tally Sheet attached, complete with signature and date;
e. copy of Radiological Survey Report form for package smears.
f. two (2) pictures of the inside of trailer at loading;
g. completed original "QUALITY L-LRW TRAILER EXAMINATION AT LOADING" checklist;
h. copy of Radiological Survey Report form for "empty before loading";
i. copy of "Vehicle Radiation Monitoring Report" form for "empty before loading";
j. copy of "PRELIMINARY VISUAL TRAILER INSPECTION" form;

Note: **The above documents generated by the WPC from QA procedure QP-12.04 have already been added to the PCR:**

k. three (3) pictures of the trailer after closing;
l. original "QUALITY FINAL SPP EXAMINATION FOR VERIFICATION" checklist;

m. original "QUALITY FINAL TRAILER/VEHICLE EXAMINATION" checklist;
n. copy of the Radiological Survey Report form for"outgoing"; and
o. copy of the "Vehicle Radiation Monitoring Report" form for "outgoing".

Note: The PCR is not complete at this time (see 2.14.4.2).

2.14 <u>Certification of the Shipping Paperwork</u>

2.14.1 The WCO reviews the documents in the FSPP folder for accuracy and completeness at the L-LWS traffic office checking essentially the same items as the WPC. The WCO completes the "QUALITY FINAL SPP EXAMINATION FOR CERTIFICATION" checklist using the following documents and checklists obtained from the WPC in the FSPP.

a. SOfNM;
b. Bill of Lading;
c. L-LRW SHIPMENT CHECKLIST & NTS NOTIFICATION form;
d. VEHICLE RADIATION MONITORING REPORTS;
e. Radiological Survey Report, showing results of smear samples of packages;
f. driver envelope (with weight tickets);
g. OFF-SITE LOADING TIE-DOWN INSPECTION VEHICLE INSPECTION form;
h. LSA/RQ, LQ documentation;
i. drivers instructions;
j. trailer envelope; (when applicable, see 2.10) and the
k. DOT approved seal. (when applicable, see 2.10)

2.14.2 The WCO signs and dates the SOfNM, in the space provided for QA, when all documents are determined to be complete and accurate.

2.14.3 The WCO signs and dates the Certification Statement. The signing of this statement assures all requirements have been met for the acceptance of the waste and packaging by the NTS in accordance with NVO-325.

2.14.4 Distribute paperwork as follows:

1. FSPP folder to the L-LWS traffic coordinator:

   a. original Bill of Lading;
   b. original signed SOfNM;
   c. original L-LRW SHIPMENT CHECKLIST & NTS NOTIFICATION;
   d. all VEHICLE RADIATION MONITORING SHEET reports;
   e. all Radiological Survey Reports;
   f. the original and one copy of the Certification Statement;
   g. OFF-SITE LOADING TIE-DOWN INSPECTION - VEHICLE INSPECTION form;
   h. field check copy of the Tally Sheet;
   i. driver envelope with weight ticket on outside;
   j. two (2) extra "Radioactive" placards; and
   k. the original and one (1) copy of the "Statement of Compliance".

2. PCR:

   a. the original QUALITY FINAL SPP EXAMINATION FOR VERIFICATION checklist;
   b. copy of the signed Certification Statement;
   c. copy of the signed Statement of Compliance;

   Note: The PCR is complete at this time.

3. Fax to Area 5 at the NTS two (2) days prior to the shipment's arrival:

   a. the Certification Statement;
   b. PS&DD sheet;
   c. copy of the "Statement of Compliance".

   Note: Instructions for faxing to DOE/NV may be found near the fax machine. If problems are encountered in faxing the above information, inform the CWCO, or if unable to do so, contact DOE/NV by telephone (number on fax form) for instructions. Make a note on the "Facsimile Service Form" of failure to transmit, and log the date, time, and name of person contacted by telephone at DOE/NV.

3.0 REFERENCES

3.1 DOE/EH-0256T, DOE Radiological Control Manual

3.2 ESH-1-1000, Comprehensive Environmental, Occupational Safety, and Health Program

3.3 ED-0001, Event Notification and Reporting

3.4 FEMP-2128, FEMP Industrial Hygiene and Safety Manual

3.5 NVO-325, Rev. 1, Nevada Test Site Defense Waste Acceptance Criteria, Certification and Transfer Requirements

3.6 QP-6.04, Qualification of Waste Package Certifiers

3.7 QP-6.05, Qualification of Waste Certification Officials

3.8 QP-12.03, Certification of Waste Containers and Filling With L-LRW for Shipment to the NTS

3.9 QP-12.04, Certification of L-LRW in Sealed Waste Containers Pre-Loading Through Loaded Transport Vehicle for Shipment to the NTS

3.10 RC-RDA-006, Radiological Survey Requirements for Radioactive Material Shipping and Receiving

3.11 RM-0012, Quality Assurance Program

3.12 SSOP-0023, Deviation and Corrective Action Report Processing

3.13 SOP 50-C-112, Preparation of Documentation for Shipment of L-LRW to the NTS

3.14 SOP-FEMP-503, FEMP Spill Incident Reporting and Cleanup

3.15 SOP-20-C-625, Evaluating Low Level Radioactive Waste (LLRW) Bulk Waste Streams For Shipment

4.0 ATTACHMENTS

4.1	Attachment A	PROHIBITED MATERIALS LIST (3 Pages)
4.2	Attachment B	QUALITY INITIAL SPP EXAMINATION FOR VERIFICATION, QP-921229, Rev. 4 (10/14/94) (2 Pages)
4.3	Attachment C	Defense Waste Management - Package Storage & Disposal Data (PS&DD) Sheet (EXHIBIT)
4.4	Attachment D	NEVADA TEST SITE SHIPMENT TALLY SHEET (EXHIBIT)
4.5	Attachment E	Curie Sheet (EXHIBIT)
4.6	Attachment F	Circle Copy (EXHIBIT)
4.7	Attachment G	Card 65-1 Item Production / Certification / Identification, FS-F-1945-1 (Rev. 11/20/92) & (Rev. 12/19/88)
4.8	Attachment H	Radiological Survey Report, FS-F-1993-0 (06/28/94), FS-F-1993-1 (REV 07/15/94), FS-F-1993-2 (07/15/94) (3 Pages)
4.9	Attachment I	Shipping Order for Nuclear Material, FS-F-558-3 (Rev. 2/11/93)
4.10	Attachment J	Waste Summary Report, Rev. 6/14/94 (EXHIBIT)
4.11	Attachment K	Weight Ticket, FMPC-PRO-238 (Rev. 12/18/86)
4.12	Attachment L	QUALITY SEALAND/TL WMB EXAMINATION AT FILLING, QP-910315-1 Rev.3 (5/10/94)
4.13	Attachment M	QUALITY PRE-LOADING PACKAGE INSPECTION FOR SEALANDS/TL WMBS QP-880930-1, Rev. 5 (5/10/94)
4.14	Attachment N	QUALITY CERTIFICATION L-LRW Shipment Status Log (EXHIBIT)
4.15	Attachment O	QUALITY INITIAL SPP EXAMINATION FOR CERTIFICATION, QP-881115-2 Rev. 5 (10/14/94) (3 Pages)
4.16	Attachment P	QUALITY FINAL SPP EXAMINATION FOR CERTIFICATION, QP-890601-1, Rev. 3 (10/14/94) (2 Pages)
4.17	Attachment Q	CERTIFICATION STATEMENT, QP-900914-1 Rev. 5 (10/14/94)
4.18	Attachment R	NV-211 Packaging Certification Labels, FS-F-234 Rev. (8/31/93)
4.19	Attachment S	STATEMENT OF COMPLIANCE, QP-930818-1, Rev. 0 (8/18/93)
4.20	Attachment T	QUALITY FINAL SPP EXAMINATION FOR VERIFICATION, QP-880731-1, Rev. 4 (05/10/94)

4.21	Attachment U	Straight Bill of Lading-Short Form-Original-Not Negotiable FS-F-452 (Rev. 9/13/93)
4.22	Attachment V	L-LRW Shipment Checklist & NTS Notification FMPC-SAML-3065 Rev (4/5/89)
4.23	Attachment W	Vehicle Radiation Monitoring Report FS-F-1596-1 (Rev. 2/19/93)
4.24	Attachment X	PRELIMINARY VISUAL TRAILER INSPECTION, FS-F-3344 (Rev. 1/17/92)
4.25	Attachment Y	Off-Site Loading Tie-Down Inspection - Vehicle Inspection FMPC-SAML-2495 REV (4/5/89)
4.26	Attachment Z	QUALITY L-LRW TRAILER EXAMINATION AT LOADING, QP-880801-1 Rev. 6 (5/10/94)
4.27	Attachment AA	QUALITY L-LRW FINAL TRAILER/VEHICLE EXAMINATION, QP-880801, Rev. 4 (5/10/94)

PROHIBITED MATERIALS LIST

PROHIBITED MATERIALS LIST

MATERIAL	LIMIT/EXPLANATION
Transuranics	Limit: <100 nanocuries/gram. Acceptability of waste stream determined during characterization.
Hazardous Waste	Limit: Per Title 40 CFR 261 and Ohio Administrative Code 3745-54. No corrosives (acids with pH ≤2 and caustic materials with Ph ≥12). No ignitables (e.g. metal powders). No reactive materials (metal fines, explosives). No toxic materials (e.g. pesticides, poisons, certain metals. No leachable listed metals (e.g. arsenic, barium, cadmium, chromium, lead, mercury, selenium, silver, and cyanide). Notes: Lead can be found in hammer heads, scale weights, flashing materials, and counter weights. Watch for barium as barium chloride salts or barium chloride contaminated materials. Only "Rayovac" dry cell batteries are acceptable (other batteries contain unacceptable quantities of metals such as cadmium, lead, & mercury). Mercury is frequently found in instruments, electrical switches (including thermostats), and fluorescent lamp tubes. Silver can be found in photographic developer fluids, solder, and electrical contacts. No solvents Some examples include WD-40, adhesives, liquid paints, paint thinners, paint removers, or materials contaminated with solvents (e.g. rags saturated with solvents). Note: If a strong smell of solvents is present, call Health & Safety for verification.

PROHIBITED MATERIALS LIST

Free Liquids	Limit: Except for entrapped or residual liquids in well drained containers (0.5% of total volume maximum), no liquids including any that might separate from the waste under ambient temperature and pressure conditions (e.g. ice, excessive evaporation and condensation). Condensation in plastic bags and waste packages shall be considered entrapped liquids. Individual trash bales which are wet shall be excluded from shipment. Slightly soggy bales that occasionally drip should be limited to 30% to prevent excessive condensation within the container.
Particulates	Limit: Wastes packaged in unlined metal drums or ISO containers must contain no more than 1% weight of <10-micrometer particles or 15% weight of <200-micrometer particles. Some examples of fine particulates are black oxide, orange oxide, green salt, sump cakes, milled magnesium fluoride, dust collector residues, floor and pad sweepings, and soils.
Compressed gases	Limit: Defined by Title 49, CFR 173.300. However, all containers designed for compression, shall be assumed to exceed limit unless valve mechanism is removed, or in the case of aerosol cans, the can has an obvious puncture. Some examples of compressed gas containers include LP gas containers, oxygen containers, and aerosol cans. Typical aerosol cans may have containing paint, adhesives, cleaning and deodorizing agents, and personal care items.
Stabilization	Limit: Waste minimization shall be attained to the extent practicable by size reduction and efficient packaging.
Etiologic Agents	Limit: None allowed. Pathogens, infectious wastes or other etiologic agents. Potential source of this prohibited waste would be from Medical. Example include band aids, tongue blades, syringes, cotton balls or other materials stained with blood or other body materials, and outdated pharamaceuticals.

PROHIBITED MATERIALS LIST

Note: **Restroom sanitary waste from the process area is to be packaged in green plastic bags, monitored, and disposed of as clean trash if within acceptable contamination limits.**

Chelating Agents:

Limit: No greater than 1% by weight.

Chelating or complexing agents. Chelating agents form coordination compounds by offering two or more chemical bonds (through ligands) to a central metal ion. The most common chelating agent is EDTA. Other common chelating agents are aminopolyacteic acids. Excess chemicals from the on-site laboratory are the primary potential source. Wastes are to be evaluated for containment of chelating agents by Waste Characterization. Any exceeding the limit are identified on the MEF or RD/RC letter for exclusion from NTS shipments.

Polychlorinated Biphenyls

Limit: None allowed unless the concentration meets the municipal solid waste disposal limits. Reference 40 CFR 761.60.

Commonly called PCB's. Frequently found in capacitors and transformers. Light ballasts that are PCB free will be marked as such. Materials contaminated with PCBs may show signs of an oily residue. If PCB's are suspected, contact Waste Characterization.

Explosives and pyrophorics

Limit: None allowed.

Other than the commonly known explosives, laboratory hoods, bottles, and containers may contain small quantities of picric acid crystals which are highly explosive. Check labels on containers and RCRA evaluation results. Pyrophoric (self igniting) materials are commonly found in porous (spongy) uranium metals, and uranium fines such as fines from turnings and residue from grinding. Also prohibited are most all metal powders.

Note: **This list was developed as an aid in identifying and recognizing prohibited materials. It is not to be used in lieu of NVO-325 waste acceptance criteria, or 40 CFR and 49 CFR requirements. Examples given are typical and are not intended to be all inclusive.**

QUALITY INITIAL SPP EXAMINATION FOR VERIFICATION
QP-921229 Rev. 4 (10/14/94)

QUALITY INITIAL SPP EXAMINATION FOR VERIFICATION

Shipment No. WML95_____

		Approval Check
1.	Date/time package was received is marked on the front of shipment paperwork package folder.	_____
2.	Check the Waste Summary for reference to the RCRA letter(s). Locate the QA file copy of letter & verify all materials are covered. Make sure these documents are present, or referenced correctly and a copy is in the folder. (when applicable)	_____
3.	Inspect paperwork folder to verify all the following documents are present and <u>properly signed</u> where applicable:	
	Package Storage & Disposal Data sheet ☐	
	Tally Sheet ☐	
	"Curie Sheet" ☐	
	"Circle copy" ☐	
	"Initial" Radiological Survey Report ☐	
	Card 65-1s ☐	
	MC&A or L-LWS worksheet ☐	
	Appropriate ME&CI checklists (001 & 002) ☐	
	Assay values or laboratory results ☐	
	Weight ticket (Sea/Land, TL WMB) ☐	
	Waste Summary Form ☐	
	WACs (002) ☐	
	MEF Container Inventory Attachment ☐	
	Shipping Order (not complete) ☐	
	Computer upload sheet ☐	
	Waste shipment special data entry info. sheet ☐	
4.	Verify the Card 65-1s for accuracy and authorized signatures. One card is required for each container in the shipment and all changes must be dated on or prior to the date this checklist is signed and dated.	_____
5.	Total all net weights and tares on the Card 65-1 and match to the gross weight.	_____
6.	Check for possible open deviations make sure any have been closed and the container is released.	_____
7.	Verify the waste stream code listed on the PS&DD sheet matches the Card 65-1.	_____
8.	Verify the container code on the PS&DD sheet matches the Waste shipment Data Entry Info. sheet for proper volume.	_____
9.	Verify the Serial No. on the Card 65-1 matches the Ident. No. on the PS&DD sheet. All Cards must be accounted for.	_____

QUALITY INITIAL SPP EXAMINATION FOR VERIFICATION
QP-921229 Rev. 4 (10/14/94)

10. Verify the assay letter date & packaged date on the PS&DD. _____

11. Verify weights on each 65 card match the Tally Sheet, totals not to exceed. (ISO = 42,000#, WMB = 8,000#, 85D = 1280#, 55D = 1200#) _____

12. Check the Radiological survey for correct packages with surface readings not greater than 200 millirem/hr and 1 meter readings taken against PS&DD entries. _____

13a. **For Waste Stream 006:**

Verify the Drum Lot ID #s on the MC&A worksheet for individual drums match the Inventory ID Attachment for the MEF. ☐

Verify the Card 65-1s match the MC&A worksheet for individual drums making sure final totals are correct and matching on both. (U235% <= 1.00 & U235 grams <= 100) ☐

Check all the assay values on the Tally sheet against the MC&A listing for the shipment. ☐

13b. **For all other Waste Streams:**

Check the Waste Description on the Card 65-1s for a match with possible Examination at Filling checklist complete with pictures of the open container. ☐

Verify ME&CI checklists when applicable, making sure they are present and completed correctly. ☐

Verify container(s) are listed on a Container Inventory Attachment and WACs are included in the folder. ☐

Verify Card 65-1 weights match the Weight ticket making sure all totals are correct for S/L or TLWMB. ☐

Verify the assay values on the MC&A letter match the values on the Tally sheet. ☐

Waste stream 001 only, when sensitive property or used equipment is included in the shipment, verify a Property Disposal Request (Form 563) is included. ☐

14. Log shipment information and date/time in the computer log. _____

I hereby certify the above criteria has been verified and is correct, to the best of my knowledge on or prior to the date recorded below.

Signature_____ Date _____

6989

ATTACHMENT C
Page 1 of 1

DEFENSE WASTE MANAGEMENT - PACKAGE STORAGE & DISPOSAL DATA (PS&DD) SHEET
(EXHIBIT)

TO: Reynolds Electrical & Engineering Co., Inc.
Defense Waste Management - Package Storage & Disposal Data

Prepared By: Kelly Nichols Date: 10/5/94
Approved By: [illegible] Date: 10/10/94
Phone: 513-738-8648 or 513-738-8646

10/05/94
10:42:28

SHIPMENT NO. WHL95025

WASTE STREAM ID NUMBER(S)	NUCLIDE CATEGORY	WASTE MATERIAL DESCRIPTION	NO. OF PKGS.	CONTAINER CODE	PACKAGE DESCRIPTION
ONL0000000001	2	CONTAMINATED MAINTENANCE RUBBLE	5	117	3-1/2 x 4-1/2 x 6-3/4 Box
ONL0000000002	2	CONTAMINATED CONSTRUCTION RUBBLE	2	119	81.25" x 57.25" x 40.5" Metal Box

PACKAGE IDENT. NUMBER	WASTE STREAM ID NO.	ASSAY DATE DDMMMYY	PACKAGED DATE DDMMMYY	CONT TYPE CODE	OPER CODE	WASTE CODE	EXTERNAL VOLUME CU. M.	INTERNAL VOLUME CU. M.	GROSS WEIGHT KGS.	NET WEIGHT KGS.	RADIATION AT SURF MR/HR	RADIATION 1 METER MR/HR	NUCLIDE QUANTITIES U-238 CURIES	U-235 CURIES	U-234 CURIES	TOTAL CURIES
156194	01	11MAY93	04OCT94	119	B	CE	3.087E+00	2.137E+00	2.885E+03	2.500E+03	.50	.50	9.024E-05	2.918E-06	6.765E-05	1.608E-04
158037	01	11MAY93	04OCT94	119	B	CE	3.087E+00	2.137E+00	2.506E+03	2.120E+03	.50	.50	7.520E-05	2.432E-06	5.637E-05	1.340E-04
653573	02	14APR93	03OCT94	117	B	DD	3.010E+00	2.038E+00	2.571E+03	2.140E+03	.50	.50	7.503E-05	3.458E-06	7.390E-05	1.524E-04
738107	02	14APR93	27SEP94	117	B	DD	3.010E+00	1.925E+00	3.075E+03	2.617E+03	.50	.50	9.004E-05	4.150E-06	8.867E-05	1.829E-04
738115	02	14APR93	03OCT94	117	B	DD	3.010E+00	1.982E+00	2.521E+03	2.063E+03	.50	.50	7.503E-05	3.458E-06	7.390E-05	1.524E-04
738116	02	14APR93	27SEP94	117	B	DD	3.010E+00	1.982E+00	2.188E+03	1.730E+03	.50	.50	6.003E-05	2.766E-06	5.912E-05	1.219E-04
738126	02	11MAY93	30AUG93	117	B	DD	3.010E+00	1.925E+00	1.164E+03	7.058E+02	.50	.50	3.008E-05	9.727E-07	2.255E-05	5.360E-05
TOTALS:							2.122E+01	1.413E+01	1.691E+04	1.388E+04			4.956E-04	2.015E-05	4.422E-04	9.579E-04

000986

ATTACHMENT D
Page 1 of 1

NEVADA TEST SITE SHIPMENT TALLY SHEET (EXHIBIT)

WML-95 025

10/05/94
10:42:22

TO: Reynolds Electrical and Engineering Co., Inc.
U.S. DOE, Nevada Test Site, Zone 2
Mercury, NV 89023
Attention: G. Kendall

FROM: Fernald Environmental Restoration Management Corporation
P. O. Box 398704
Cincinnati, OH 45239

NEVADA TEST SITE SHIPMENT
TALLY SHEET

LOT NUMBER W050-100-P003-9660
LOT NUMBER W050-100-P003-8058
LOT NUMBER W071-100-N003-8057

LOT NUMBER	CONT. NO.	GROSS WT. (POUNDS)	TARE WT. (POUNDS)	NET WT. (POUNDS)	U ASSAY	PERCENT U-235	PERCENT U-238	PERCENT U-234	U POUNDS	ELEMENT WT(gms)	U-235 ISOTOPE WT(gms)	U-238 ISOTOPE WT(gms)	U-234 ISOTOPE WT(gms)	U-235 Ci	U-238 Ci	U-234 Ci	VOLUME CU FT
9660	156194	6361.0	850.0	5511.0	.010	.5000	99.47	.0035	.6	272.15	1.4	271	9.525E-03	2.918E-06	9.024E-05	6.765E-05	109.016
9660	158037	5524.0	850.0	4674.0	.010	.5000	99.47	.0035	.5	226.80	1.1	226	7.938E-03	2.432E-06	7.520E-05	5.637E-05	109.016
8057	653573	5667.0	950.0	4717.0	.010	.7110	99.25	.0054	.5	226.80	1.6	225	1.240E-02	3.458E-06	7.503E-05	7.390E-05	106.297
8057	738107	6779.0	1010.0	5769.0	.010	.7110	99.25	.0054	.6	272.15	1.9	270	1.489E-02	4.150E-06	9.004E-05	8.867E-05	106.297
8057	738115	5558.0	1010.0	4548.0	.010	.7110	99.25	.0054	.5	226.80	1.6	225	1.240E-02	3.458E-06	7.503E-05	7.390E-05	106.297
8057	738116	4824.0	1010.0	3814.0	.010	.7110	99.25	.0054	.4	181.44	1.3	180	9.923E-03	2.766E-06	6.003E-05	5.912E-05	106.297
8058	738126	2566.0	1010.0	1556.0	.010	.5000	99.47	.0035	.2	90.72	.5	90	3.175E-03	9.727E-07	3.008E-05	2.255E-05	106.297
TOTALS		37279.0	6690.0	30589.0					3.3	1496.85	9.4	1487	7.025E-02	2.015E-05	4.956E-04	4.422E-04	749.518
--- LOT TOTALS ---																	
9660	2	11885.0	1700.0	10185.0					1.1	498.95	2.5	496	1.746E-02	5.350E-06	1.654E-04	1.240E-04	218.033
8058	1	2566.0	1010.0	1556.0					.2	90.72	.5	90	3.175E-03	9.727E-07	3.008E-05	2.255E-05	106.297
8057	4	22828.0	3980.0	18848.0					2.0	907.18	6.5	900	4.962E-02	1.383E-05	3.001E-04	2.956E-04	425.189

CURIE SHEET
(EXHIBIT)

WML-95 025

CURIE SHEET

Reynolds Electrical and Engineering Co., Inc.
Radioactive Waste Management-Storage & Disposal

	LSA Container Number	Net Weight	Gross Weight	Total Curies
	156194	5511.0	6361.0	.00016080
	158037	4674.0	5524.0	.00013400
	653573	4717.0	5667.0	.00015238
	738107	5769.0	6779.0	.00018285
	738115	4548.0	5558.0	.00015238
	738116	3814.0	4824.0	.00012190
	738126	1556.0	2566.0	.00005360
TOTAL LSA Containers	7	30589.0	37279.0	.00095793

	LQ Container Number	Net Weight	Gross Weight	Total Curies
TOTAL LQ Containers	0	.0	.0	.00000000

	RQ Container Number	Net Weight	Gross Weight	Total Curies
TOTAL RQ Containers	0	.0	.0	.00000000
TOTAL RQ/LSA Containers	0	.0	.0	.00000000
TOTAL RQ/LQ Containers	0	.0	.0	.00000000

CIRCLE COPY
(EXHIBIT)

WML-95 025

CIRCLE COPY

Reynolds Electrical and Engineering Co., Inc.
Radioactive Waste Management-Storage & Disposal

PACKAGE NO.	NET WT	TARE WT	GROSS WT	LSA	LQ	RQ
156194	5511.00	850.00	6361.00	X		
158037	4674.00	850.00	5524.00	X		
653573	4717.00	950.00	5667.00	X		
738107	5769.00	1010.00	6779.00	X		
738115	4548.00	1010.00	5558.00	X		
738116	3814.00	1010.00	4824.00	X		
738126	1556.00	1010.00	2566.00	X		

ATTACHMENT G
Page 1 of 1

CARD 65-1 ITEM PRODUCTION / CERTIFICATION / IDENTIFICATION
FS-F-1945-1 (REV. 11/20/92) & (REV. 12/19/88)

Revision 11/20/92

CARD 65-1 **ITEM PRODUCTION/CERTIFICATION/IDENTIFICATION** INV. NO.:

P. O. NO.	SOURCE	CLASS	MATERIAL TYPE	LOT SEQUENCE NO.	DATE MO	DATE DAY	DATE YEAR	SHIFT	BADGE NO.	CONT. NO.	SERIAL NO.

SEAL NUMBER	SEAL DATE MONTH	SEAL DATE DAY	SEAL DATE YEAR

PACKAGE PHYSICAL CERTIFICATION	YES	NO
EMPTY CONTAINER AT START		
RUST HOLES OR DENTS		
MATERIAL IS AS CODED		
PROHIBITED MATERIALS		
LIQUIDS IN CONTAINER		
MINIMUM OF VOID SPACE		
PACKAGE SECURED		
DRAIN PLUG SECURED		
OVERPACK		
REPACK		

PLANT	PROD. MBA	MEF NO.
DCAR	SURV. NO.	GROSS WEIGHT
		TARE WEIGHT
		NET WEIGHT

WASTE DESCRIPTION AND COMMENTS

PACKAGE TYPE	
PACKAGE SIZE	
PROJECT	

GENERATOR SIGNATURE — SUPERVISOR SIGNATURE — DATE

FS-F-1945-1 (REV. 11/20/92)

☆U.S. GPO:1992-761 382

Revision 12/19/88

CARD XX **ITEM PRODUCTION/CERTIFICATION/IDENTIFICATION** 127715

P. O. NO.	SOURCE	CLASS	MATERIAL TYPE	LOT SEQUENCE NO.	DATE MO	DATE DAY	DATE YEAR	SHIFT	BADGE NO.	PACKAGE NO.

SEAL NUMBER	SEAL DATE MONTH	SEAL DATE DAY	SEAL DATE YEAR

PACKAGE PHYSICAL CERTIFICATION	YES	NO
EMPTY CONTAINER AT START		
RUST HOLES OR DENTS		
MATERIAL IS AS CODED		
PROHIBITED MATERIALS		
LIQUIDS IN CONTAINER		
MINIMUM OF VOID SPACE		
PACKAGE SECURED		
DRAIN PLUG SECURED		

PLANT	PROD. MBA
PLANT TO	MBA TO

GROSS WEIGHT

TARE WEIGHT

NET WEIGHT

WASTE DESCRIPTION AND COMMENTS

PACKAGE TYPE	
PACKAGE SIZE	

GENERATOR SIGNATURE — SUPERVISOR SIGNATURE — DATE

FMPC-CONT-1945-XX (REV. 12/19/88)

•U.S. GPO: 1990-749-781

RADIOLOGICAL SURVEY REPORT
FS-F-1993-0 (06/28/94)

FEMP RADIOLOGICAL SURVEY REPORT COVER SHEET				SURVEY NUMBER:	
DATE:	LOCATION:	RCT:		BADGE:	PAGE: 1 OF ____
TIME:	LEVEL:	SIGNATURE:			
WORK PERMIT NUMBER:		REVIEWER:		BADGE:	
RWP NUMBER:		SIGNATURE:		DATE:	
ATTACHMENTS:					

REASON FOR SURVEY	

SUMMARY:

NO.	DISTRIBUTION OF COPIES
1	RECORD
2	DCS
3	RA MANAGER

RADIOLOGICAL SURVEY REPORT
FS-F-1993-1 (REV. 07/15/94)

FEMP
RADIOLOGICAL SURVEY REPORT

DATE:	LOCATION:	RCT:	BADGE:	PAGE:
TIME:	LEVEL:	SIGNATURE:		1 OF __
REASON FOR SURVEY				

MODEL	SERIAL NUMBER	TYPE (α, β, γ)	CALIBRATION -DUE DATE	BKGD. (cpm)	EFF./CF	COUNT TIME (min)	MDA (dpm)	INSP./ PERFORMANCE TEST SAT?	
								YES	NO

ITEM NUMBER	LOCATION AND/OR DESCRIPTION	HEIGHT (FT.)	DPM/100cm² ALPHA		DPM/100cm² BETA-GAMMA		CORRECTED DOSE RATE (MREM/HR)			
			REMOVABLE (1)	FIXED PLUS REMOVABLE	REMOVABLE (1)	FIXED PLUS REMOVABLE	γ CONTACT	β CONTACT	γ AT __ FT.	β AT __ FT.

Note (1): Values identified by an asterisk (*) indicate results are less than the calculated MDA (RC-RDA-010).

NO.	DISTRIBUTION OF COPIES
1	RECORD
2	DCS
3	RA MANAGER

NOTIFICATION OF SURVEY RESULTS					
SUPERVISOR NOTIFIED	TIME	DATE	NOTIFIED BY	REVIEWED BY	DATE

RADIOLOGICAL SURVEY REPORT
FS-F-1993-2 (07/15/94)

FEMP

RADIOLOGICAL SURVEY REPORT - CONTINUATION SHEET

Page ___ of ___

ITEM NUMBER	LOCATION AND/OR DESCRIPTION	HEIGHT (FT.)	DPM/100cm² ALPHA		DPM/100cm² BETA-GAMMA		CORRECTED DOSE RATE (MREM/HR)			
			REMOVABLE (1)	FIXED PLUS REMOVABLE	REMOVABLE (1)	FIXED PLUS REMOVABLE	γ CONTACT	β CONTACT	γ AT __ FT.	β AT __ FT.

Note (1): Values identified by an asterisk (*) indicate results are less than the calculated MDA (RC-RDA-010).

No. QP-12.07	REVISION: 1	DATE: 02/27/95	PAGE: 41 OF 62

6989

SHIPPING ORDER FOR NUCLEAR MATERIAL
FS-F-558-3 (REV. 2/11/93)

ATTACHMENT I
Page 1 of 1

Fernald Environmental Restoration Management Corporation
SHIPPING ORDER FOR NUCLEAR MATERIAL

Date Prepared: _____

SHIP TO: REYNOLDS ELECTRICAL & ENGINEERING CO.	ROUTING:		SHIPPERS AUTHORIZATION NO.:	SHIPPING ORDER NO.:
STREET: c/o U.S. DEPARTMENT OF ENERGY	■ PREPAID ☐ COLLECT	CAR OR TRAILER NO.: / SEAL NO.:	SHIPPED FROM PLANT:	ORIGINATOR NO.:
CITY: MERCURY STATE: NEVADA ZIP CODE: 89023		BILL OF LADING NO.: / QUALITY CONTROL APPROVAL:		DATE SHIPPED:
SPECIAL INSTRUCTIONS:		COUNTRY CONTROL NO.: US US 00 00 / PROJECT NO.:		TIME SHIPPED:

Type of Material _____ FEMP Production Order No. N003 Originator's Signature _____

Station RIS VAB DOE 741 No. FVC-VAB- Shipment Authorized By _____ NUCLEAR MATERIALS REPRESENTATIVE

NMC DATA			ORIGINATOR'S DATA						MATERIAL CONTROL DATA					
FROM MBA	COST CODE	741 NO.	P.O NO.	LOT NUMBER	QUANTITY	WEIGHT (LBS) GROSS	TARE	NET	ANAL. CODE	ELE. ANAL.	ELE. LBS.	ELE. GRAMS OR KGS	ISO. ANAL.	U^{234} GRAMS OR KGS

DISTRIBUTION OF COPIES			
1	NMA (RECORD COPY)	4	Environmental Restoration
2	Traffic	5	Quality Certification
3	NMA (Cost)	6	Originator

I, _____ certify that this shipment was made on the above date after complying with all regulations.

Audited by _____ Date _____

FS-F-558-3 (REV 2/11/93)

000994

WASTE SUMMARY REPORT
REV. 6/14/94 (EXHIBIT)

DATE 6-20-94

WASTE SUMMARY

SHIPMENT NUMBER
94-315

WASTE STREAM
01

LETTER OR MEF NUMBERS
1088, 905, 1539 842
1841

MATERIAL	YES	NO
Wood	✓	
Metal	✓	
Paper		
Plastic	✓	
Cardboard		
Rubber		
Glass		
Fiberglass	✓	
Concrete		
Soil		
Mag Fluoride		
Sump Cake		
Dust Coll. Res.		
RTV	✓	

CHECKLIST NEED	YES	NO
905	✓	
1088	✓	
1539	✓	
1284		✓
WAC	✓	

FILLER BOXES

WASTE STREAM

LETTER NUMBER

MATERIAL	YES	NO

Signature [illegible]

Rev. 6-14-94

ATTACHMENT K
Page 1 of 1

WEIGHT TICKET
FMPC-PRO-238 (REV. 12/18/86)

)

FMPC
WEIGHT TICKET DATE:

LOT NUMBER: ▶	GROSS WEIGHT:
DRUM NUMBER: ▶	TARE WEIGHT:
MATERIAL TYPE: ▶	NET WEIGHT:
OPERATOR: ▶	ZERO:
SHIRT: ▶	CHECKWEIGHT:

FMPC-PRO-238 (REV. 12/18/86)

QUALITY SEALAND/TL WMB EXAMINATION AT FILLING
QP-910315-1 REV.3 (5/10/94)

QUALITY SEALAND/TL WMB EXAMINATION AT FILLING

CONTAINER NO:_____

REQUESTOR/GENERATOR:_____ LOCATION:_____

INITIAL TARE WEIGHT:_____lbs. DATE OF PREP:_____

SECTION 1 EXAMINATION OF CONTAINER PREPARATION **STAMP/INITIAL**

1. Verify container is strong tight. (No holes, flaking paint or rust per QP-12.03) _____

2. Verify container is properly prepared for filling in accordance with SSOP-0078 & SSOP-0079. _____

****

SECTION 2 EXAMINATION OF CONTAINER FILLING

MATERIAL TYPE:_____

DATE FILLING COMPLETE _____

1. Verify Prohibited Materials list is prominently posted in packaging area and no prohibited items are packaged. _____

2. Verify condition of container in accordance with procedures QP-12.03 and SSOP-0078 or SSOP-0079. _____

3. Verify no free liquids are visible, nor is material saturated to the extent that seepage could be expected during handling and transport. _____

4. Verify weight is evenly distributed and freeboard is minimized. _____

5. Verify the Card 65-1 and/or correct ME&CI checklists have been initiated and are correct to this point. _____

DEVIATION NOTED: NO YES DR# _____ Close Date:_____

Comments:_____

_____

_____

I certify the above items have been examined and are correct to the best of my knowledge in accordance with SSOP-0078 or SSOP-0079.

Signed: _____ Date:_____
(Quality Verification)

QP-910315-1, Rev. 3 (5/10/94)

ATTACHMENT M
Page 1 of 1

QUALITY PRE-LOADING PACKAGE INSPECTION FOR SEALANDS/TL WMBS
QP-880930-1, REV. 5 (5/10/94)

QUALITY PRE-LOADING PACKAGE INSPECTION FOR SEALANDs/TL WMBs

SECTION I

DATE: _____ SHIPMENT NUMBER: WML_____

CONTAINER STYLE: _____ CONTAINER SERIAL NO.: _____

WEIGHTS: Gross _____ Tare _____ Net _____

INITIALS

1. Verify Card 65-1 (Rev. 11/20/92) is completed accurately. _____

****

SECTION II

1. Verify information on (3) Bar Codes match Circle Copy:

   Shipment Number Gross Weight
   Container Number Tare Weight _____

2. Verify Waste Stream listed on Bar Code matches PS&DD. _____

3. Verify paperwork includes correct Radiological Survey (initial smear) listing the packages in the shipment. _____

4. DOT approved Radioactive marking (LSA, RQ, or LQ) is securely affixed to two long sides of the package. _____

5. Radioactive placards present. (4 sides) _____

6. No significant deformations are present. _____

7. No scaling rust or sever pitting. _____

8. No free liquids emitting from the package. _____

9. All erroneous markings have been removed or covered. (the initial tare weight has been removed or lined out) _____

10a. FOR SEALANDS ONLY. The doors are latched, sealed with caulking, and the two latch bars are banded together. _____

b. Verify approved DOT Seal #_____ is attached.

11a. FOR TL WMB ONLY. The lid is closed and properly bolted. in accordance with procedure QP-12.04 _____

b. Verify approved DOT Seal(s) are properly attached.

TL WMB Seal #_____ Seal #_____

I hereby certify the above items have been examined and are correct to the best of my knowledge.

Signed:_____ Date: _____
(Quality Verification)

QUALITY CERTIFICATION L-LRW SHIPMENT STATUS LOG (EXHIBIT)

ATTACHMENT N
Page 1 of 1

10/27/94

QUALITY ASSURANCE
L-LRW Shipment Status Log

Page 1

SHIPMENT NUMBER	QUANT. NUMBER	PACKAGE TYPE	MATERIAL DESCRIPTION	DATE RECIEVED	DATE TO MC&A	DATE LOADED	DATE SHIPPED	Q CONTROL NONCONFORMANCE
95-072	1	S/L	THORIUM WASTE	9/12/94	9/28/94	10/07/94	10/10/94	QA VERIFICATION ISO EXAMINATION OF FILLING CHECKLIST INCOMPLETE
95-069	8	WMB	NON-RECOVERABLE RESIDUES/SUMP CAKE	9/13/94	9/28/94	9/30/94	9/30/94	NONE
95-002	7	WMB	SUMP CAKE	9/16/94	9/21/94	9/26/94	9/27/94	NONE
95-003	7	WMB	SUMP CAKE	9/16/94	9/22/94	9/27/94	9/28/94	COMPUTER UPLOAD INCORRECT PREFIX 94 INSTEAD OF 95
95-004	6	WMB	SUMP/MAG	9/16/94	9/22/94	9/27/94	9/29/94	COMPUTER UPLOAD INCORRECT PREFIX
95-067	7	WMB	NON-RECOVERABLE RESIDUES/SUMP CAKE/MAGNESIUM	9/16/94	9/28/94	9/29/94	9/30/94	NONE
95-068	7	WMB	SUMP CAKE/MAGNESIUM FLUORIDE	9/16/94	9/28/94	9/29/94	9/30/94	NONE
95-005	6	WMB	SUMP/MAG	9/19/94	9/22/94	9/27/94	9/29/94	INCORRECT SHIPMENT# ON ALL PAPERWORK. SHIPPING ORDER SIGNED NOT DATED.
95-006	7	WMB	SUMP/MAG	9/19/94	9/22/94	9/27/94	9/28/94	LOT CODE ON MC&A ASSAY FOR 3 DRUMS INCORRECT.
95-007	8	WMB	SUMP/MAG	9/19/94	9/22/94	9/27/94	9/28/94	NONE
95-031	1	S/L	CONTAMINATED MAINTENANCE RUBBLE/PLANT 6	9/19/94	9/22/94	9/29/94	9/30/94	COMPUTER UPLOAD INCORRECT PREFIX 94 INSTEAD OF 95. 3 CHECKLISTS REQ'D OVERSIGNING FOR CORRECTIONS MADE AFTER APPROVAL WSS INCOMPLETE
95-008	8	WMB	SUMP/MAG	9/20/94	9/22/94	9/28/94	9/28/94	NONE
95-032	1	S/L	CONTAMINATED MAINTENANCE RUBBLE	9/20/94				
95-033	1	T/L	CONTAMINATED RAILROAD TIES	9/20/94	9/23/94	9/28/94	9/29/94	MATERIAL DESCRIPTION INCONSISTENT WITH MEF USED WASTE SUMMARY SHEET CHANGE INTITIALED NOT DATED.
95-034	1	T/L	CONTAMINATED RAILROAD TIES	9/20/94	9/22/94	9/28/94	9/29/94	COMPUTER UPLOAD INCORRECT PREFIX. MAT'L DESCRIPTION NOT CONSISTENT WITH MEF. SHIPMENT# INCORRECT.
95-035	2	S/L	CONTAMINATED MAINTENANCE/CONSTRUCTION RUBBLE	9/20/94	9/22/94	9/28/94	9/29/94	QA PAPERWORK NEEDED COMPLETED.
95-036	1	S/L	CONTAMINATED MAINTENANCE RUBBLE	9/20/94	9/22/94	9/28/94	9/28/94	SHIPMENT# INCORRECT ON SHIPPING ORDER
95-037	1	S/L	CONTAMINATED MAINTENANCE RUBBLE	9/20/94	9/22/94	9/28/94	9/28/94	NONE
95-038	1	S/L	CONTAMINATED METAL	9/20/94	9/22/94	9/28/94	9/28/94	NONE
95-009	8	WMB	SUMP/MAG	9/21/94	9/23/94	9/28/94	9/29/94	NONE
95-010	7	WMB	SUMP/MAG	9/21/94	9/27/94	9/28/94	9/30/94	NONE
95-042	1	S/L	CONTAMINATED MAINTENANCE RUBBLE	9/21/94	9/27/94	9/29/94	9/29/94	NONE
95-043	1	S/L	CONTAMINATED MAINTENANCE RUBBLE	9/21/94	9/26/94	9/29/94	9/30/94	INVENTORY# WAS CHANGED ON 65CARD AND NOT MEF CHECKLIST. DID NOT LIST EMPTY CAULK TUBES & MEF ON CHECKLIST.

000959

QUALITY INITIAL SPP EXAMINATION FOR CERTIFICATION
QP-881115-2 REV. 5 (10/14/94)

QUALITY INITIAL SPP EXAMINATION FOR CERTIFICATION

Shipment No. WML95_____

		Approval Check
Review the Card 65-1		
1.	Lot Number(s) (P.O.NO., Source, Class, Material Type, Lot Sequence No.) agree(s) with Waste Description & Project on all cards.	_____
2.	All weight information is complete & totals are correct all cards.	_____
3.	Package Physical Certification block is complete & entries are acceptable on all cards.	_____
4.	All Package Information is correct for Waste and Shipment Type on all cards.	_____
5.	All cards are signed and dated by trained Generators & responsible Supervisor.	_____
Review the Package Storage & Disposal Data (PS&DD) Sheet		
1.	Appropriate preparer's signature with date.	_____
2.	No unusual values or arrangement which indicates a computer program error.	_____
3.	Shipment Number agrees with rest of package.	_____
4.	Waste Stream ID Number present & agrees with Waste Material Description.	_____
5.	Nuclide Category is correct. (Should be "2" for Uranium/Thorium.)	_____
6.	Waste Material Description present & agrees with Card 65-1 Waste Description.	_____
7.	Number of Packages agree with total Card 65-1s for shipment.	_____
8.	Container Type Code is listed & agrees with the Package Description. (109 = S/L, 121 = TL WMB, 124 = 85D, 102 = 55D, 119 or 117 = 7A WMB "common sizes", etc...)	_____
9.	Package Description is present & type agrees with Card 65-1.	_____

QUALITY INITIAL SPP EXAMINATION FOR CERTIFICATION
QP-881115-2 REV. 5 (10/14/94)

10. Package Ident. Numbers agree with Serial No. block on Card 65-1 & all Cards 65-1s are accounted for. _____

11. U Assay Date agrees with date on the MC&A Assay Letter and package date agrees with Cards 65-1 or MC&A checklist. _____

12. Packaged Date matches the most current date on the Card 65-1 or ME&CI checklists. _____

13. Proper Waste Code is entered. (BW = biological waste, CE = contaminated equip., DD = decontamination debris, DS =dry solid, SS = solidified sludge, NC = not classified) _____

14. Radiation readings & container# should match the entries on the Radiological Survey Report for Initial Dose Rates. _____

<u>Review the Nevada Test Site Shipment Tally Sheet</u>

1. Shipment Number agrees with PS&DD Sheet. _____

2. All line items (Lot Number, Cont. No., Gross Wt., Tare Wt., Net Wt.) agree with each Card 65-1 and all cards are accounted for. _____

3. Lot Number(s) agree with (P.O.No., Source, Class, Material Type, & Sequence No.) blocks on Card 65-1. _____

   NOTE: MC&A documentation may be accepted in place of Card 65-1s if characterization was made on waste already packaged.

4. Percent U-235 analysis agrees with lot enrichment code (P.O. No.) on Card 65-1. _____

5. U Assay and % U-235 concur with approved values from analytical or approved in writing by an MC&A letter and each package is within limits (U235% <1. & U grams =<100) _____

6. External Volume (Cu.Ft.) is correct for Container Code listed on PS&DD & Card 65-1.(109 = 1349.020, 121 = 1253.318, 124 = 14.126, 117 = 106.297, 119 = 109.016, etc...) _____

7. The Gross External Volume on the <u>total line</u> is correct. _____

8. Gross Weights do not exceed the maximum gross weight per container type. (WMB = 8,000#, ISO = 42,000#, 85D = 1280#, 55D = 1200#) _____

9. Check the conversion from english to metric on totals against totals on PS&DD. (CONVERSION FACTORS LB/KG = .45359237, CU.FT/CU.MT. = .028316847) _____

QUALITY INITIAL SPP EXAMINATION FOR CERTIFICATION
QP-881115-2 REV. 5 (10/14/94)

Review the Remaining Sheets in Shipment Folder

1. **REECo RWM-S&D** sheet "Curie Sheet" is present & LQ, LSA, & RQ designations are correct. (if not, verify correct curie list is issued) _____

2. **REECo RWM-S&D** sheet "Circle Copy" is present & LQ, LSA, & RQ list for loading is correct and is in agreement with Curie Sheet. (Non-process contaminated materials are always LSA) _____

3. **Initial Radiological Survey Report** is present & complete with contact & 1-meter (3.3 ft.) readings. _____

4. **Initial Radiological Survey** readings at contact are not greater than 200 mR/hr. _____

5. **Waste Summary** report referencing applicable RCRA Letters, MEFs, and NTS Waste Acceptance Criteria (WAC) forms which are required to be on file is included in the folder.

   Note: A copy of **RCRA Letters, MEFs, and NTS WAC** forms are required to be in the folder for 002 or for the any first shipment covered by a new RCRA letter. **ME&CI checklists** are required for waste characterized in accordance with procedure SOP 20-C-625 _____

6. Partially completed **Shipping Order** is included in shipment folder with correct WML number, material description and originator's signature. _____

7. Copy of **Property Disposal Request** (563 form) present and complete when shipment is from waste stream 001 and shipment contains used equipment or sensitive items. _____

I hereby certify the above criteria has been verified to be correct, to the best of my knowledge.

Signature: _____

Date: _____

QUALITY FINAL SPP EXAMINATION FOR CERTIFICATION
QP-890601-1, REV. 3 (10/14/94)

QUALITY FINAL SPP EXAMINATION FOR CERTIFICATION

Date_____ Time ____:____:____ Trailer No._____

Shipment No. WML95_____ No. of Containers & Type _____

1. **Storage & Disposal Data Sheet**
   A. Prepared by signed & dated ☐ Approved by signed & dated ☐
   B. Date _____ Time ____:____:____ Shipment No. WML95_____
   C. Material Description_____
   D. Total External Volume (Cu.M.) _____ Gross Weight (Kgs.) _____
   E. Total Curies _____

2. **Tally Sheet**
   A. Shipment No. WML95_____ Date _____ Time ____:____:____
   B.

Lot Number	Gross Wt.(lbs)	Net Wt.(lbs)	Volume(Cu.Ft)
Totals			

   C. Total # of containers _____ Normal ☐ Depleted ☐ Enriched ☐

3. **Bill of Lading**
   B/L No._____ Trailer No._____ Seal No.FA/WMCO #_____
   741 No.FVC-VAB- _____ SS-SO No. _____ #_____
   Estimated Time of Arrival: _____

Number of containers:		Type Container	Gross Wt.	Net Wt.
LSA _____	RQ _____			
	NON-RQ _____			
LQ _____	RQ _____			
	NON-RQ _____			
Totals	_____			

   Above information agrees with Shipping Order & Tally Sheet. ☐
   Remainder of information on Bill of Lading checked. ☐

4. **Shipping Order for Nuclear Material**
   A. Shipping Order No. _____ Trailer No. _____
   B. Bill of Lading No. _____ Seal No. FA-WMCO #_____
   C. 741 No. FVC-VAB _____ MC & A Signed ☐ #_____
   D. Material Type _____
   E. Lot Nos. agree with Tally Sheet ☐ Total Quantity _____

Total Gross	Total Tare	Total Net

   F. Totals Weights agree with Tally Sheet. ☐
   G. Each U235 Grams or Kg calc. correct(NET LB*ELE ANAL*453.59*ISO ANAL) ☐
   H. Estimated Time of Arrival: _____

5. **Low Level Waste Shipment Checklist and NTS Notification Form**
   A. Shipment No. WML95_____ B/L No._____ SS-SO No. _____
   B. Shipment, B/L, & SS-SO No.s agree with B/L and Shipping Order ☐
   C. Form completed except for Departure Time and Traffic Manager review ☐

QUALITY FINAL SPP EXAMINATION FOR CERTIFICATION
QP-890601-1, REV. 3 (10/14/94)

6. **Radiation Monitoring Sheet**
   A. Trailer Empty ☐ Trailer ID# _____
   B. Trailer Loaded ☐ Trailer ID# _____
   C. Cab Only ☐ Trailer ID# _____
   D. Loaded Vehicle Radiological Survey ☐ Trailer ID# _____
   E. Temporary Seal Numbers _____ _____
   F. Garage inspection attached ☐
   G. License No. _____

7. **Container Radiological Data**
   Initial Dose Rate Data ☐ Smears: Date_____ Mil.Time _____
   Verification Large Area Smears (LAS) ☐

8. **Weight Ticket**
   Load Weight _____ Rear Axle Wt._____ Drive Wt._____

9. **Off-Site Tie-Down Inspection Form**
   Shipment No. WML95_____ Trailer No._____ Seal No. FA/WMCO #_____
   A. Checked and signed in two places ☐ #_____

10. **LSA/RQ, LQ documentation**
    A. Copy in Traffic File package ☐ Copy in Driver envelope ☐
    B. Wt. checks with Tally Sheet ☐ Curies check with PS&DD/Tally Sheet ☐
    C. Tally Sheet also in envelope ☐ 2 Weight ticket with envelope ☐

11. **Driver Instructions**
    A. 2 complete sets with Traffic package ☐
    B. All Written identity & information checks ☐

12. **Dates, Times & Copies**
    A. Field check copy of Tally Sheet included in Traffic folder. ☐
    B. Check Date & Time of all copies in Traffic folder. ☐
    C. Check of Date & Time for all PS&DD copies in Traffic folder. ☐

13. **Waste Certification Checklists**
    A. QUALITY L-LRW TRAILER EXAMINATION AT LOADING ☐
    B. QUALITY L-LRW FINAL SPP EXAMINATION FOR VERIFICATION ☐
    C. QUALITY L-LRW FINAL TRAILER/VEHICLE EXAMINATION ☐
    D. Shipping Order signed by WCO ☐
    E. Statement of Compliance signed by WCO ☐

Date Shipment was released _____ at ____:____ AM / PM

Signed _____

List Non-conformances found:

_____

_____

ATTACHMENT
Page 1 of 1

CERTIFICATION STATEMENT
QP-900914-1 REV. 5 (10/14/94)

CERTIFICATION STATEMENT

LOW-LEVEL WASTE SHIPMENT FROM FEMP TO NEVADA TEST SITE

Bill of Lading# _____	Seal Number(s) _____
Trailer# _____	_____

I certify that the packages in Shipment No. WML95_____ as listed on the attached Package Storage & Disposal Data report do not contain hazardous waste as defined in Title 40 CFR 261 or OAC 3745-54 hazardous waste regulations:

(1) according to the results of tests performed in accordance with the requirements as specified in Subpart C of Title 40 CFR 261; and/or

(2) according to the supporting documentation provided to me about the materials and processes that produced the waste.

To the best of my knowledge, I believe the information I have submitted is true, accurate, and complete.

_____
FEMP Waste Certification Official

Date:_____

QP-900914-1, Rev. 5 (10/14/94)

NV-211 PACKAGING CERTIFICATION LABELS
FS-F-234 REV. (8/31/93)

NV-211
1/27/89

PACKAGING CERTIFICATION

U.S. DOE

This certifies that this container and its contents are in acceptable condition for transportation and waste disposal according to DOT (49 CFR), EPA (40 CFR), and DOE/NV (NVO-325) requirements.

DATE: _____

CERTIFIED BY: _____

TITLE: WASTE CERTIFICATION OFFICIAL

ORGANIZATION: FEMP

FS-F-234 (REV. 8/31/93)

NV-211
1/27/89

PACKAGING CERTIFICATION

U.S. DOE

This certifies that this container and its contents are in acceptable condition for transportation and waste disposal according to DOT (49 CFR), EPA (40 CFR), and DOE/NV (NVO-325) requirements.

DATE: _____

CERTIFIED BY: _____

TITLE: WASTE PACKAGE CERTIFIER

ORGANIZATION: FEMP

FS-F-234-1 (REV. 8/31/93)

STATEMENT OF COMPLIANCE
QP-930818-1, REV. 0 (8/18/93)

STATEMENT OF COMPLIANCE

I have checked all packages in Shipment No. WML95_____ to certify that each has an NV-211 label dated with a current date, and signed by either a Package Certifier or a Waste Certification Official. I fully understand the importance of the NV-211 label, and have performed this check with the utmost care to preclude any error on my part.

Caution: Sign this statement only when certain that you have performed the verification check thoroughly and accurately. If you were interrupted while checking NV-211 labels in this shipment, you are required to recheck the entire shipment prior to signing this statement.

Certified By: _____ Date: _____/_____/_____
Waste Certification Official

ATTACHMENT T
Page 1 of 1

QUALITY FINAL SPP EXAMINATION FOR VERIFICATION
QP-880731-1, REV. 4 (05/10/94)

QUALITY L-LRW FINAL SPP VERIFICATION EXAMINATION

	Bill of Lading	Shipping Order
Shipment#		
Bill of Lading#		
Shippers#		
Trailer#		
Date prepared		
Gross Weight		
Tare Weight	N/A	
Net Weight		
E. T. A.		
Sealand Cont.#		
Seal#		
LA signature	YES NO	YES NO
No. containers		

PACKAGING INFORMATION

Hazard Class _____
Material Form _____
Chemical Form _____
Labels Required _____
Container Type _____

L-LRW SHIPMENT CHECKLIST

Shipment# _____
Bill of Lading# _____
Shipping Order# _____
All checks OK YES NO
3 Signatures YES NO

RADIATION MONITORING SHEETS

	Empty	Survey	Outgoing	Survey	Cab
Trailer#					
Date/Time					
		Temporary Seal		Complete license	

CONTAINER RADIOLOGICAL SHEETS

	Date	Time	Data Comp.	Container#
Initial			YES NO	
			YES NO	
Smears			YES NO	
			YES NO	
Verification			YES NO	Shipment#

CURIE SHEET/BILL OF LADING

Curies _____
LSA / LQ / RQ _____

OFF-SITE TIE DOWN

Shipment# _____
Trailer# _____
Seal# _____
Signatures OK YES NO

3 Tally Sheets & 1 PS&DD Present? _____
Driver Instruction Package Complete & Numbered? _____
Weight Ticket: Front Axle _____ Rear Axle _____ Gross Wt. _____
Extra Radioactive Placards For Flatbeds or Non-flip Vans. _____

QP-880731-1, Rev. 4 (05/10/94)

STRAIGHT BILL OF LADING-SHORT FORM-ORIGINAL-NOT NEGOTIABLE
FS-F-452 (REV. 9/13/93)

STRAIGHT BILL OF LADING — SHORT FORM — ORIGINAL — NOT NEGOTIABLE

CARRIER	DATE	CARRIER'S NO.	SHIPPER'S NO.

RECEIVED, subject to the classifications and tariffs in effect on the date of the receipt by the carrier of the property described in the Original Bill of Lading.

AT FERNALD, OHIO **FROM** USDOE, c/o Fernald Environmental Restoration Management Corporation
ACTING UNDER DOE CONTRACT DE-AC05-92OR21972

the property described below, in apparent good order, except as noted (contents and condition of contents of packages unknown), marked, consigned, and destined as indicated below, which said carrier (the word carrier being understood throughout this contract as meaning any person or corporation in possession of the property under the contract) agrees to carry to its usual place of delivery at said destination, if on its route, otherwise to deliver to another carrier on the route to said destination. It is mutually agreed, as to each carrier of all or any of said property either all or any portion of said route to destination, and as to each party at any time interested in all or any of said property, that every service to be performed hereunder shall be subject to all the terms and conditions of the Uniform Domestic Straight Bill of Lading set forth (1) in Official, Southern, Western and Illinois Freight Classifications in effect on the date hereof, if this is a rail or a rail-water shipment, or (2) in the applicable motor carrier classification or tariff if this is a motor carrier shipment.

Shipper hereby certifies that he is familiar with all the terms and conditions of the said bill of lading, including those on the back thereof, set forth in the classification or tariff which governs the transportation of this shipment, and the said terms and conditions are hereby agreed to by the shipper and accepted for himself and his assigns.

(Mail or street address of consignee — For purposes of notification only.)

Consigned to: _____

Destination: _____ State of: _____ County of: _____

Route: _____

Delivering Carrier: _____ Vehicle No.: Tra. #

Car Initial: _____ Car No.: _____ Seal No.: FA-WMCO-

NUMBER PACKAGES	HM	DESCRIPTION OF ARTICLES, SPECIAL MARKS, AND EXCEPTIONS	* WEIGHT (Subject to Correction)	CLASS OR RATE	CHECK COLUMN
		EMERGENCY CONTACT: DOE/FEMP/AEDO CONTROL CENTER, FERNALD, OH (513) 738-6200, COLLECT, NIGHT OR DAY.			

Subject to Section 7 of Conditions of applicable bill of lading, if this shipment is to be delivered to the consignee without recourse on the consignor, the consignor shall sign the following statement.
The carrier shall not make delivery of this shipment without payment of freight and all other lawful charges.

FERMCO
(Signature of consignor)

If charges are to be prepaid, write or stamp here, "To be Prepaid."

Received $ _____ to apply in prepayment of the charges on the property described hereon.

Agent or Cashier

Per _____
(The signature here acknowledges only the amount prepaid.) _____

Charges Advanced:

$ _____

* If the shipment moves between two ports by a carrier by water, the law requires that the bill of lading shall state whether it is "carrier's or shipper's weight."
NOTE - Where the rate is dependent on value, shippers are required to state specifically in writing the agreed or declared value of the property.
The agreed or declared value of the property is hereby specifically stated by the shipper to be not exceeding:

_____ Per _____

+ THIS SHIPMENT IS CORRECTLY DESCRIBED. CORRECT WEIGHT IS

_____ LBS

SUBJECT TO VERIFICATION BY THE E. W. & I. BUREAU NATIONAL WT. AGREEMENT

- Shipper's imprint in lieu of stamp; not a part of bill of lading approved by the Interstate Commerce Commission.

741 NO.: _____

SS - SO NO.: _____

MSO NO.: _____

EQUAL EMPLOYMENT OPPORTUNITY — The nondiscrimination clauses contained in section 202 of Executive Order 11246 relative to equal employment opportunity for all persons without regard to race, creed, color, or national origin, and the implementing rules and regulations of the President's Committee on Equal Employment Opportunity which, to the extent not inconsistent with Executive Order 11246, remain in full force and effect as those of the Secretary of Labor, are incorporated herein.

THIS SHIPMENT is subject to the terms and conditions set forth in the standard form of the U. S. Government bill of lading and to any available special rates or charges.

- **This shipment is the property of and the freight charges are assumed by the U. S. Government, Subject to the provisions of Section 10721 Quotation No. (Tender No. _____ Effective _____).**
- IT IS UNDERSTOOD AND AGREED THAT THIS SHIPMENT IS MADE BY THE CONSIGNOR FOR AND ON BEHALF OF THE U. S. GOVERNMENT; THAT THE CONSIGNOR IS AUTHORIZED TO AND WILL MAKE ANY PAYMENT DUE HEREUNDER AS CONSIGNOR OR SHIPPER FROM GOVERNMENT FUNDS ADVANCED AND AGREED TO BE ADVANCED TO IT BY THE U. S. DEPARTMENT OF ENERGY AND NOT FROM ITS OWN ASSETS, AND THAT NOTHING HEREIN SHALL PRECLUDE LIABILITY OF THE GOVERNMENT FOR ANY PAYMENT PROPERLY DUE HEREUNDER IF FOR ANY REASON SUCH PAYMENT IS NOT MADE BY THE CONSIGNOR FROM SUCH GOVERNMENT FUNDS.
- THIS IS TO CERTIFY THAT THE ABOVE NAMED MATERIALS ARE PROPERLY CLASSIFIED, DESCRIBED, PACKAGED, MARKED AND LABELED, AND ARE IN PROPER CONDITION FOR TRANSPORTATION ACCORDING TO THE APPLICABLE REGULATIONS OF THE DEPARTMENT OF TRANSPORTATION

USDOE, c/o Fernald Environmental Restoration Management Corporation, shipper

Per _____

Permanent post office address of shipper,

P. O. BOX 398704 CINCINNATI, OHIO 45239-8704
AREA CODE 513 738-6200

_____ Agent

Per _____

ATTACHMENT V
Page 1 of 1

L-LRW SHIPMENT CHECKLIST & NTS NOTIFICATION
FMPC-SAML-3065 REV (4/5/89)

FMPC
SECURITY, ACQUISITION & MATERIALS LOGISTICS - TRANSPORTATION SECTION
LLW SHIPMENT CHECKLIST & NTS NOTIFICATION

DATE:	SHIPMENT NO.:	B/L NO.:	SS SO NO.:	CARRIER:	TRAILER NO.:

	LSA	DEPARTURE TIME:	ETA: / NOTIFICATION TO NTS ☐ (FTS: 575-6307
	RQ	FROM:	
	LTD. QTY.	TO:	
	DRUMS	DATE:	
	WASTE CERTIFICATION CONTAINER TOTALS, WEIGHTS & CURIES OF LSA/LTD QTY - RQ SHEETS	BY WHOM:	
	BOXES	TO WHOM	
	SMEAR SHEETS	☐ FACSIMILE SENT	☐ DRIVER GIVEN DOSIMETER BADG
	WASTE MANAGEMENT STORAGE & DISPOSAL SHEETS DELIVERED — PER NTS	MONITORING REPORTS:	
	TALLY SHEETS		
	CARRIER/DRIVER INSTRUCTION PACK (2)		
	NEVADA PERMIT		
	INCOMING/EMPTY BEFORE LOADING		
	OUTGOING/LOADED		
	TRACTOR CAB		
	OFFSITE LOADING-TIE DOWN-VEHICLE INSPECTION REPORT		
	WEIGHT TICKET		
	CHECKED TALLY SHEET (BY CHECKER)		
	DRIVER RECEIVES: COPY OF B/L, TALLY SHEET, INSTRUCTION PACK, NEVADA PERMIT, & ENVELOPE FOR CONSIGNEE WITH TALLY SHEET & MEMO B/L		

ECIALIST A/TRAFFIC	TRANSPORTATION SUPERVISOR: (REVIEW)	TRAFFIC MANAGER: (REVIEW)

	CONDITION OF CONTAINERS	LOADERS:
	CONTAINER PROPERLY LABELED	
	RADIOACTIVE PLACARDS (FOR LSA ONLY)	
	ENVELOPE WITH STORAGE & DISPOSAL SHEETS AND TALLY SHEETS IN TRAILER	
	TRAILER LINED WITH PLASTIC & CARDBOARD ON FLOOR— SCRAP WOODEN PALLETS AND/OR BOXES ENCLOSED WITH PLASTIC AS ONE PACKAGE	

Transportation Supervisor: _____

VEHICLE RADIATION MONITORING REPORT
FS-F-1596-1 (REV. 2/19/93)

FEMP
ES&H - RADIOLOGICAL CONTROL
VEHICLE RADIATION MONITORING REPORT Page _____ of _____

DATE MONITORED:	TIME:	TECHNICIAN (PRINT):	TECHNICIAN (SIGNATURE)

CARRIER NAME: RANGER

VEHICLE TYPE: ☐ TRACTOR ☐ TRAILER ☐ OTHER MOTOR VEHICLE ☐ RAILCAR ☐ OPEN FLATBED ☐ COVERED

☐ OTHER (EXPLAIN): _____

LICENSE NO. (IF MOTOR VEHICLE):	STATE:	TRAILER OR RAILCAR IDENTIFICATION:	SEAL NUMBER:
N/A	N/A		

VEHICLE STATUS:
☐ (a) OUTGOING
☐ (b) INCOMING
☐ (c) OUTGOING EMPTY
☐ (d) EMPTY, BEFORE LOADING
☐ (e) OTHER: _____

Dose rate shown by asterisks in mr/hr.
Swipe Locations circled.

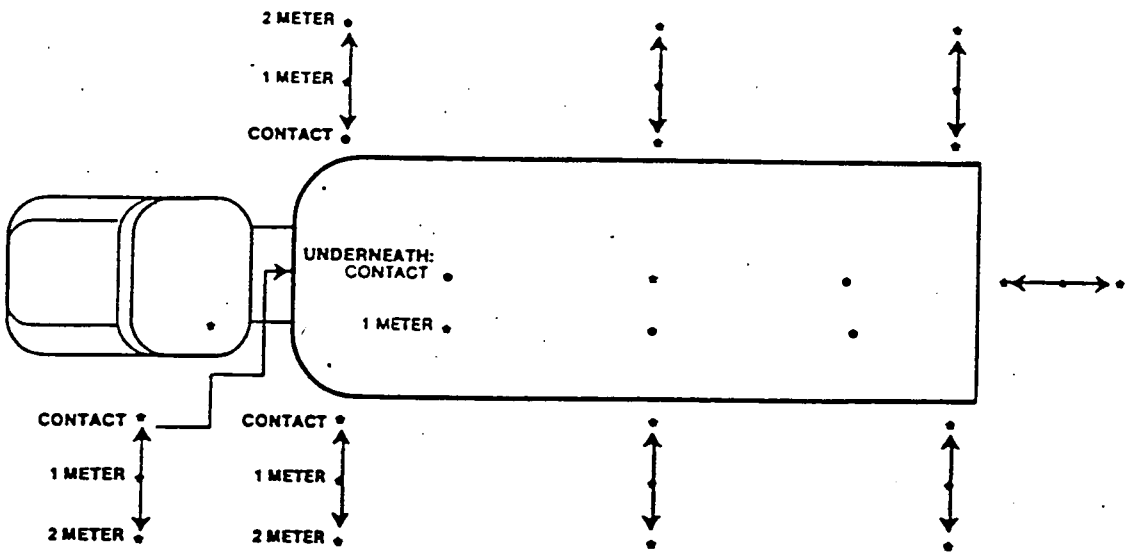

(1) Same locations apply to van-type trucks. For railcars, disregard cab section but show dose rates found at each end.
(2) Measurements at 1 or 2 meters not required if all readings at vehicle surface are not greater than 2 mrem/hr.

SURVEY INSTRUMENTS USED	TYPE:	MODEL NO.:	SERIAL NO.:	CALIBRATION DUE:
	B-G	M-		
	TYPE:	MODEL NO.:	SERIAL NO.:	CALIBRATION DUE:
			N/A	

NO.	DISTRIBUTION OF COPIES
1	RADIOLOGICAL SAFETY (RECORD COPY)
2	TRAFFIC SUPERVISOR
3	QUALITY ASSURANCE

REVIEWED BY:	DATE:

FS-F-1596-1 (REV. 2/19/93)

PRELIMINARY VISUAL TRAILER INSPECTION
FS-F-3344 (REV. 1/17/92)

Fernald Site
PRELIMINARY VISUAL TRAILER INSPECTION

CARRIER	TYPE TRAILER	TRAILER NUMBER

CHECKLIST			DISCREPANCIES—COMMENTS
1. Inspect the following on trailer prior to driver unhooking:			2. Discrepancies that need to be brought to the attention of the Garage Supervisor and FS&S:
ITEM	ACCEPT	REJECT	
Lights			
Cross Member			
U Bolts & Springs			
Torque Arms			
Rims & Nuts			
Brake Lines & Shoes			
Tires			
Wheel Seals			

Comments: _____

Signed: _____ Badge No.: _____ Date: _____

DISTRIBUTION: QA VERIFICATION
Facility Services & Support

OFF-SITE LOADING TIE-DOWN INSPECTION - VEHICLE INSPECTION
FMPC-SAML-2495 REV (4/5/89)

FMPC
SECURITY, ACQUISITION & MATERIALS LOGISTICS DEPARTMENT - TRANSPORTATION SECTION

OFFSITE LOADING — TIE DOWN INSPECTION — VEHICLE INSPECTION

Date: _____

COMMODITY:	CARRIER:	TRAILER NO.:	SEAL NO.:
			FA-WMCO

BALE/BOX/DRUM/SEA LAND CONTAINER NUMBERS:

_____ _____ _____ _____ _____
_____ _____ _____ _____ _____
_____ _____ _____ _____ _____
_____ _____ _____ _____ _____
_____ _____ _____ _____ _____
_____ _____ _____ _____ _____

LSA _____
LSA-RQ _____
LQ _____
LQ-RQ _____
TOTAL _____

DISCREPANCIES DETECTED	CORRECTED		SHIPMENT REJECTED	
	YES	NO	YES	NO

Checked By _____
SIGNATURE - CHECKER

TIE-DOWN INSPECTION AND CHECK-OFF SHEET

INSPECTION ITEM	YES	NO
Wood shoring installed to prevent longitudinal or lateral movement		
Steel strapping around the cargo securing as a stable shipment		
When weight dictates, containers divided into two units, one front and one rear of trailer not exceeding approximately 20,000 pounds each		
1¼" steel strapping utilized (5450 lbs. minimum tensile strength)		
____ each anchor plates or "U" bolts fastened to underframe (____ each side of unit) placed and secured for ____ transverse bands over unit		
Four each brakeman plates or "U" bolts fastened to underframe (two for each band) placed under each unit and secured for two longitudinal bands, securing the boxes/skids into one tight unit, anchored to the floor of the trailer		
Two Signode seals No. 107 crimped whenever two bands are used on an end over end lap joint		
Anchor and brakeman plates secured with eight each 2" nails		
Sea Land Containers ..... 4 each nylon straps		
..... Chains		
..... 2 X 4s		

VEHICLE INSPECTION REPORT

CONDITION	PASS	FAIL	CONDITION	PASS	FAIL	CONDITION	YES	NO
Condition of Floor			Condition of Sides			Detected Sabotage Devices		
Condition of Interior			Condition of Exterior					
Condition of Roof			Condition of Rear Doors			Detected Evidence of Sabotage		

Overall appearance:
_____
_____

General Comments:
_____
_____

Accepted: _____ Rejected: _____

Checked By: _____
SIGNATURE - TRANSPORTATION SUPERVISOR

NO.	DISTRIBUTION OF COPIES
1	Transportation Section *(RECORD COPY)*

FMPC-SAML-2495 (REV. 4/5/89)

ATTACHMENT Z
Page 1 of 1

QUALITY L-LRW TRAILER EXAMINATION AT LOADING
QP-880801-1 REV. 6 (5/10/94)

QUALITY L-LRW TRAILER EXAMINATION AT LOADING

SHIPMENT NO WML95_____ LOADING LOCATION:_____

CARRIER: _____ TRAILER NO.: _____

	Stamp	Date
1. Verify a Preliminary Visual Trailer Inspection was completed for empty trailer prior to having been unhooked from tractor.	◯	_____
2. Verify a EBL radiological survey (FS-F-1596-1) is complete for trailer, and results meet 49 CFR 173.441 requirements.	◯	_____

(For Vans Only) SEAL# _____

****

		VANS ONLY
3a. Prior to loading, verify seal number is the same as that applied by the RC technician.	◯	
3b. Verify each package has a signed and dated NV-211 label affixed and TID(s) are present.	◯	
3c Verify each package is free of dirt/loose rock and has no significant deformations or holes.	◯	
3d. Verify there is no free liquid emitting from packages.	◯	
3e. Verify that packages have been properly tied-down as specified by procedure SOP 50-C-109.	◯	
3f. Verify the trailer envelope is affixed to the last package inside the trailer.	◯	
3g. Verify that the loaded trailer rear doors are secured with the DOT approved seal. Seal No. _____	◯	

		FLATBEDS
4a. Verify there is no free liquid emitting from the package.	◯	
4b. Verify each package has been cleaned of dirt/loose rock and has no significant deformations or holes.	◯	
4c. Verify that the doors of each Sea/Land container are banded and secured with a tamper proof DOT approved seal.	◯	

Package#1 Serial# _____ Seal# _____ _____
(Sea/Land or TL WMB)

Package#2 Serial# _____ Seal# _____ _____
(Sea/Land or TL WMB)

PLACE A SIGNED & DATED NV-211 ON SEA/LAND OR TL/WMB WHEN CRITERIA 4 A-C IS MET AND TAKE ONE (1) PHOTO OF LABEL TO VERIFY IT IS SIGNED AND DATED.

Signed: _____ Date: _____
(Quality Verification)

QP-880801-1, Rev. 6 (05/10/94) ***WRITE COMMENTS OF BACK OF FORM**

ATTACHMENT AA
Page 1 of 1

QUALITY L-LRW FINAL TRAILER/VEHICLE EXAMINATION
QP-880801, REV. 4 (5/10/94)

QUALITY L-LRW FINAL TRAILER/VEHICLE EXAMINATION

SHIPMENT NO WML95_____ TRAILER NO.: _____

1. With the assistance of the off-site driver, verify all of the following are operational on the transport vehicle:

Headlights (low & high beams)	☐
Turn signals	☐
Brake lights	☐
Horn	☐
Windshield Wipers	☐
Trailer tires	☐
Tractor tires	☐

****

2a. Verify the trailer envelope was affixed inside the trailer at loading or has been placed there during this examination.	_____	VAN
2b. Verify the DOT approved seal is in place on the trailer doors.	_____	
2c. Verify there are four (4) placards and type is correct for material. (Radioactive or Drive Safely)	_____	

3a. Verify the four (4) placards are securely affixed to each package. (one on all four sides)	_____	FLATBED
3b. Verify each package has been blocked correctly in accordance with SOP-50-C-108.	_____	
3c. Verify each package has the correct number of chains & straps and is tied down according to SOP-50-C-111.	_____	

****

I certify the above items have been examined and are correct to the best of my knowledge. All photographs have been taken and added to the paperwork file.

Signed: _____ Date: _____ Time:_____
(Quality Verification)

QP-880801, Rev. 4 (05/10/94)

6989

STEP 6.

Fernald Environmental Management Project Fernald Environmental Restoration Management Corp. REMEDIATION SUPPORT OPERATIONS DOCUMENT SYSTEM	Page 1 of 13 Revision No. 0 Revision Date: N/A

WASTE PROGRAMS MANAGEMENT PROCEDURE	**Inspection of Inbound Carrier Vehicles Used For Low Level Radioactive Waste (LLRW), Hazardous Waste and/or Product Off-Site Shipment**	50-C-107 TECHNICAL PROCEDURE

(Signature on File) Authorization: M. L. West, Waste Programs Management Manager	Supersedes: None	Issue Date: 12-05-94

NON-CONTROLLED COPY

TABLE OF CONTENTS

1.0 PURPOSE 2

2.0 SCOPE 2

3.0 APPLICABLE DOCUMENTS 2
- 3.1 Source Documents 2
- 3.2 Reference Documents 2

4.0 DEFINITIONS 2

5.0 RESPONSIBILITIES 3

6.0 GENERAL 3

7.0 HEALTH AND SAFETY REQUIREMENTS 3

8.0 PROCEDURE 4

RECORD OF ISSUE/REVISION 15

1.0 PURPOSE

This document provides procedures for inspection of inbound carrier vehicles used for off-site shipment of Low Level Radioactive Waste (LLRW), Hazardous Waste (HW) and/or product containers.

2.0 SCOPE

This procedure applies to all organizations responsible for inspection of inbound carrier vehicles used for shipment of LLRW, HW and/or product containers to off-site destinations from the Fernald Environmental Management Project (FEMP).

3.0 APPLICABLE DOCUMENTS

3.1 Source Documents

3.1.1 D10-00-020, "Remediation Support Operations Division Document System"

3.1.2 49 CFR 173, Shippers - General Requirement

3.1.3 RM-0012, "Quality Assurance Program Description"

3.2 Reference Documents

3.2.1 None

4.0 DEFINITIONS

4.1 Low Level Radioactive Waste (LLRW) - Waste that contains radioactivity and is not classified as high level waste, transuranic waste, or spent nuclear fuel or 11e(2) byproduct material as defined by DOE Order 5820.2A. Test specimens of fissionable material irradiated for research and development only, and not for the production of power or plutonium, may be classified as low-level waste, provided the concentration of transuranic is less than 100 n Ci/g.

4.2 Off-Site - All of the areas outside the main perimeter security fence that are not controlled at all times by guards and security fences.

4.3 Vehicle - A Conveyance (for purpose of this SOP) consisting of an over-the-road trailer or a straight truck. The tractor trailer power unit is not considered a vehicle.

5.0 RESPONSIBILITIES

5.1 **Maintenance Services Garage** - Responsible for the inspection of carrier vehicles that will be used for outbound shipments and documentation of all maintenance and inspections by trained qualified technicians.

5.2 **Low Level Waste Scheduling** - Responsible for providing guidance on the requirements for loading, and off-site shipment of LLRW, HW and/or product containers including preparing the bill of lading and coordinating scheduling and inspecting carriers.

5.0 RESPONSIBILITIES (cont.)

5.3 **Radiological Assessment** - Responsible for conducting radiological surveys of materials, packages, and carrier vehicles that will be used for off-site shipments, documenting results of surveys, and providing copies of the results as required.

5.4 **Quality Assurance** - Responsible for verifying the inspection, documentation, and radiological survey(s) for the inbound carrier vehicle are completed.

6.0 GENERAL

6.1 Warnings, Cautions, and Notes precede the Step, Sub-Step, Item, Section, or Sub-Section to which they apply.

7.0 HEALTH AND SAFETY REQUIREMENTS

7.1 Safety glasses with side shields shall be worn unless other eye protection is specified by supervisor or ES&H.

7.2 Leather-palmed gloves shall be worn to protect the hands.

7.3 Any circumstance which could have resulted in an intake of radioactive materials by inhalation, ingestion, or absorption shall immediately be reported to a Supervisor. The Supervisor shall immediately report the circumstance of possible radioactive materials intake to ES&H Radiological Control Department for evaluation. When the suspect isotope is uranium, the involved personnel shall report to the Urine Sampling Station at the end of their shift to complete an Incident Investigation Report (IIR) (Form No. FS-F-1458), and submit an incident urine sample. The involved personnel shall also report to the Urine Sampling Station at the start of their next shift to submit a follow up urine sample. When the suspect isotope is other than uranium, the involved personnel shall report to the Dosimetry Section of the Radiological Control Department for further determination of actions. Employees are responsible for complying with additional requirements as specified by the Radiological Control Section.

7.4 Any situation which could have resulted in the inhalation, ingestion, or absorption of a hazardous material shall immediately be reported to a Supervisor or to the Assistant Emergency Duty Officer (AEDO), who will immediately report the circumstances to Medical and Industrial Hygiene. The involved personnel shall be directed by the Supervisor or AEDO as to when and where to report for medical evaluation, completion of an Incident Investigation Report (IIR) (Form No. FS-F-1458), and submitting bioassay samples (e.g. blood, urine). Employees are responsible for complying with any additional requirements as specified by ES&H.

8.0 **PROCEDURE**

MAINTENANCE SERVICES GARAGE

NOTE 1: Code 1 conditions are Out-of-Service conditions which require fixing before loading can occur. Code 2 conditions are those which require fixing at the nearest repair station, but loading can occur. A Code 3 is an acceptable mechanical condition.

NOTE 2: Supervisor will make determination between Code 1 and Code 2 conditions.

8.1 Inspect inbound carrier vehicles that will be used for off-site shipments in accordance with Federal Motor Carrier Safety Regulations (49 CFR Part 396), as described in the following Steps and record on "Preliminary Vehicle Inspection Form" (See Figure 1).

NOTE: Code 1 inspection items are listed in the following steps. The associated tables list inspection items requiring supervisor code determination.

8.1.1 Lights - A minimum of one each of the following lighting devices on a trailer or straight truck shall be in operating order: stop, tail and turn signal. Other lighting items to be inspected are detailed in Table 1.

8.1.2 Tires - All tires shall be free of bulges, separations, or cuts that have severed the cords. Tires shall have a minimum of 3/32 inch depth of tread on the trailer and 5/32 inch depth of tread on the tractor, a shall not be rubbing or touching another tire. Other tire items to be inspected are detailed in Table 2.

8.1.3 Wheel Seals - All wheel seals shall be free of leaks.

8.1.4 Brake Lines and Shoes - All brake lines shall be securely fastened and free from leaks. Brake shoes shall be no less than 1/4 inch in thickness and shall not be cracked or missing any parts. Other brake items to be inspected are detailed in Table 3.

8.1.5 Frame and Cross Members - Cross members shall be in place and free of breaks, cracks or serious deformation. Other frame items to be inspected are detailed in Table 4.

8.1.6 U-Bolts and Springs - No U-bolt or spring shall be cracked, broken, missing, or shifted out of position. Other U-Bolt/Spring items to be inspected are detailed in Table 5.

8.1.7 Torque Arms - No torque arm shall be cracked, broken, bent, missing or shifted out of position. Other torque arm item to be inspected are detailed in Table 5.

REMEDIATION SUPPORT OPERATIONS TEMPORARY CHANGE NOTICE (TCN)

ONLY ONE TCN CHANGE PERMITTED PER DOCUMENT PAGE

1. **NOTE: TCN not valid without Supervisor signature, Manager initials and Operator signature (when required).**

SUPERVISOR: Dale A. Vizedom EXT: 6478 SIGNATURE: (Signature on File)

OPERATOR: N/A EXT: SIGNATURE: (Signature on File)

DOCUMENT OWNER: M.L. West SUPV. ORG.: WPM CHARGE NUMBER: 8ADC1

2. EFFECTIVE DATE OF CHANGE: 01-13-95

3. EXPIRATION DATE OF CHANGE: 07-13-95 ***NOTE: Maximum effective period six months.***

4. AFFECTED DOCUMENT NUMBER: 50-C-107 NON-CONTROLLED COPY

5. AFFECTED PAGE NUMBER 5

6. DOCUMENT ISSUE DATE: 12-05-94 REVISION NUMBER: 0

7. CHANGE (Use additional sheets of paper if necessary):
Enter each item number and associated change separately.

1) Step 8.2.8 is revised to read as follows:

8.2.8 If vehicle is Code 2 or 3, move to container location and proceed to load unless restricted by a Work Plan.

8. PROCEDURE ADMINISTRATION TCN ACTION REQUIRED (Check as Appropriate)

8a. ☐ EFFECTIVE PERIOD > 30 DAYS. DISTRIBUTE TCN AND INCORPORATE INTO AFFECTED DOCUMENT BEFORE TCN EXPIRES.

8b. ☐ EFFECTIVE PERIOD > 30 DAYS. DISTRIBUTE TCN BUT DO NOT INCORPORATE. ALLOW TCN TO EXPIRE.

8c. ☐ EFFECTIVE PERIOD < 30 DAYS. DO NOT DISTRIBUTE. ALLOW TCN TO EXPIRE.

8.0 **PROCEDURE** (cont.)

8.1.8 Wheel Rims and Nuts - Wheels and rims shall not be cracked or broken. Nuts or bolts shall not be missing or loose. Other wheel items to be inspected are detailed in Table 2.

NOTE: It shall be the Garage Supervisor's decision as to the proper code assignment, based on available documentation.

8.1.9 Trailer Identification Plate - Must be present to load. This is not an Out-of-Service condition but is a DOT requirement.

NOTE: Low Level Waste Scheduling maintains a file on all tractors with protective structures.

8.1.10 Front End Structure - Shall be checked for presence on tractor or trailer and marked on Observation Form. This is not an Out-of-Service requirement but is a DOT requirement.

8.2 After the inspection is complete, forward a copy of the completed inspection document to the Low Level Waste Scheduling for further distribution and control of the inspection documentation.

LOW LEVEL WASTE SCHEDULING

8.2.1 Contact Radiological Monitoring to conduct radiological surveys and smears of inbound carrier vehicle.

RADIOLOGICAL MONITORING TECHNICIAN

8.2.2 Conduct radiological surveys and smears.

8.2.3 Complete applicable forms and forward to Low Level Waste Scheduling for distribution and control of monitoring documentation.

QUALITY ASSURANCE

8.2.4 Verify proper documentation of inspection of carrier vehicle trailer and that radiological survey(s) and smears have been conducted on the trailer.

LOW LEVEL WASTE SCHEDULING

8.2.5 Verify vehicle monitoring and results recorded on Form No. FS-F-1596-1, "Vehicle Radiation Monitoring Report". (See Figure 2).

8.2.6 Verify "Preliminary Vehicle Inspection Form" has been completed. (See Figure 1).

8.2.7 If vehicle is unacceptable, contact supervisor for confirmation. Return vehicle to carrier, unused, if major (Code 1) vehicle conditions are found.

8.2.8 If vehicle is Code 2 or 3, move to container location and proceed to load.

INSPECTING LIGHTING DEVICES

ONLY THOSE LAMPS INCLUDED IN THE NORTH AMERICAN STANDARD INSPECTION ARE LISTED.

1.	ALL LAMPS		Possible defects include missing, inoperative, improper color, unsecure mounting, and poor electrical connection (flickering, etc.)	393.11 393.9
2.	ELECTRICAL WIRING		Possible defects include crimping, cracks, abrasions in protective clothing; exposed, twisted-together wiring; wires resting on other components; and loose connections.	393.28
3.	STRAIGHT TRUCKS	FRONT -	At least two head lamps, an equal number on each side. Clear lens.	393.11
		REAR -	Two tail lamps, one on each side. Red lens.	393.11
			Two stop lamps, one on each side. Red lens.	
			Two turn indicators, one on each side. Red or amber lens.	
4.	SEMI-TRAILERS & FULL TRAILERS	REAR -	Two tail lamps, one at each side. Red lens.	393.11
			Two stop lamps, one at each side. Red lens.	
			Two turn indicators, one at each side. Red or amber lens.	

INSPECTING LIGHTING DEVICES
Table 1

6989

INSPECTING TIRES, WHEEL, RIMS, AND LUG NUTS

	Component	Possible Defects	
1.	WHEEL & RIM:	• Elongated stud holes • Cracks between stud holes • Cracks between hand holes • Cracks from hand hole to stud hole • Cracks from hand hole to the rim • Welds (other then manufacturer's) • Any circumferential crack except at valve • Sprung rim	393.205
2.	LUG NUTS, STUDS, CLAMPS:	• Missing or broken • Loose • "Bleeding" rust stains from lugs may indicate looseness • Studs or nuts that are too small or do not fit the wheel seat properly	
3.	TIRE AS A WHOLE	• Bulges (NOTE: A technique commonly used to repair tires leaves a bulge that is strong and safe. It is difficult to tell the difference between such repair and a problem bulge. Use Caution). • Leaks • Sidewall separation • Cuts on sidewall • Worn spots • Exposed fabric (ply cord) • Sidewall contact with any part of vehicle • Tire contact with its mate in a dual set • Blowout patch, boot, or other ply repair • Label "Not For Highway Use" • Markings which would exclude use on the steering axle • A tube-type radial tire requires a radial tube. The radial tube is identified by a red band on the stem or by the word "radial" embossed on the item.	393.75
4.	SPARE TIRE:	• Unsecure	
5.	INFLATION PRESSURE: For Straight Trucks Only	• Visually check for under or overinflation. A hot tire may indicate underinflation and overloading	393.75(i)
6.	REGROOVED TIRES ON FRONT WHEELS:	• Regrooved tires with a load carrying capacity equal to or greater than that of 8.25 x 20, 8 ply-rating the steering axle.	393.75(e)
7.	TIRE MATCH:	• Mixing of radial and bias tires on the same axle (refer to print on side of tire)	
8.	TIRE VALVE:	• Tire flap protruding through valve slot in rim and touching stem	

INSPECTING TIRES, WHEEL, RIMS, AND LUG NUTS
Table 2

INSPECTING WHEEL SEALS, BRAKE LINES AND SHOES

	Component	Possible Defects	
1.	BRAKE HOSE OR TUBING & FITTINGS	• Air Leaks • Improper connections (Vice grips, tape, copper tubing splices not allowed) • Routing • Restrictions • Contact with moving or hot parts	393.45
2.	RESERVOIR:	• Air Leaks	393.50
3.	BRAKE DRUMS:	• External cracks that open upon brake application • Any portion of the drum or rotor (disc brakes) missing or in danger of falling off • Rust on the braking surface of the drum or rotor may indicate an inoperable brake • Oil or grease contamination	
4.	BRAKE LININGS OR PADS:	• Cracks • Not firmly attached to the shoe • Lining with a thickness less than 1/4 inch at the shoe center for drum brakes or less than 1/8 inch for disc brakes • Failure to move upon application • Failure to contact the drum • Missing from assembly	393.47
5.	BRAKE CHAMBERS:	• Missing mechanical components • Broken mechanical components • Unsecure mounting • Mismatched chamber size on same axle • Audible air leak (ruptured diaphragm)	
6.	PUSH RODS & SLACK ADJUSTORS:	• Push rod travel measurement • Bent or broken • Excessively worn • Missing parts • Not functioning properly	
7.	CLEVIS PINS AND YOKES:	• Worn • Badly rusted • Cracked or broken • Cotter pin missing	
8.	MOUNTING BRACKETS: For Straight Trucks Only	• Crack or deformity	
9.	FRONT AXLE BRAKES:	• Any sign of disconnected brakes • Disconnected and capped air hose • Slack adjuster disconnected or improperly adjusted	393.42

INSPECTING WHEEL SEALS, BRAKE LINES AND SHOES
Table 3

6989

INSPECTING FRAME AND CROSS MEMBERS

	Component	Possible Defects	393.201
1.	FRAME:	• Cracked, loose, sagging, broken • Broken or loose bolts or brackets • Accessories loosely bolted to frame • Holes drilled into top or bottom of rail flange, except where specified by manufacturer	
2.	REAR END PROTECTION:	• Clearance between the bottom of the rear end protection and the ground greater than 30 inches with vehicle empty	393.86
3.	SLIDING SUB FRAME: (Or sliding tandem)	• Cracked or loose frame members • Locking pins missing or not engaged (usually one pin on each side)	393.201

INSPECTING FRAME AND CROSS MEMBERS
Table 4

0808

INSPECTING U-BOLTS AND SPRINGS

393.207

Component	Possible Defects
1. U-BOLTS:	• Loose, cracked, or missing • Spaces under nuts • Gaps between spring leaves
2. SPRING HANGERS:	• Cracked • Unsecurely mounted at frame • Missing positioning bolt • Missing shackle pin
3. RADIUS OR TORQUE ARMS:	• Unsecure attachment at either end of rod • Any cracks in the rod or attaching mounts • Bent rods • Missing from assembly
4. LEAF SPRINGS:	• Broken or missing leaves • Leaves out of alignment which may contact tires or body parts • Unsecure attachment of radius leaf
5. COIL SPRINGS:	• Broken or cracked coils
6. AIR BAGS:	• Leaking • Uneven inflation • Unsecure tracking arm
7. TORSION BARS:	• Broken or cracked bars • Unsecure mounting
8. EQUALIZER BEAM:	• Unsecure mounting at center or ends • Cracked

INSPECTING U-BOLTS AND SPRINGS
Table 5

0127 e 8 e 8

REMEDIATION SUPPORT OPERATIONS
TEMPORARY CHANGE NOTICE (TCN)

1

ONLY ONE TCN CHANGE PERMITTED PER DOCUMENT PAGE

1. **NOTE: TCN not valid without Supervisor signature, Manager initials and Operator signature (when required).**

SUPERVISOR: Dale A. Vizedom EXT: 6478 SIGNATURE: (Signature on File)

OPERATOR: N/A EXT: SIGNATURE: (Signature on File)

DOCUMENT OWNER: M.L. West SUPV. ORG.: WPM CHARGE NUMBER: 8ADC1

2. EFFECTIVE DATE OF CHANGE: 01-13-95

3. EXPIRATION DATE OF CHANGE: 07-13-95 *NOTE: Maximum effective period six months.*

4. AFFECTED DOCUMENT NUMBER: 50-C-107

5. AFFECTED PAGE NUMBER 11

NON-CONTROLLED COPY

6. DOCUMENT ISSUE DATE: 12-05-94 REVISION NUMBER: 0

7. CHANGE (Use additional sheets of paper if necessary):
Enter each item number and associated change separately.

1) PRELIMINARY VEHICLE INSPECTION FORM Code 2 is revised to read as follows:

Code 2: Restricted; Repairs to be completed prior to release, except for lighting devices or as specified by Supervisor. (verification required)

8. PROCEDURE ADMINISTRATION TCN ACTION REQUIRED (Check as Appropriate)

8a. ☐ EFFECTIVE PERIOD > 30 DAYS. DISTRIBUTE TCN AND INCORPORATE INTO AFFECTED DOCUMENT BEFORE TCN EXPIRES.

8b. ☐ EFFECTIVE PERIOD > 30 DAYS. DISTRIBUTE TCN BUT DO NOT INCORPORATE. ALLOW TCN TO EXPIRE.

8c. ☐ EFFECTIVE PERIOD < 30 DAYS. DO NOT DISTRIBUTE. ALLOW TCN TO EXPIRE.

6989

PRELIMINARY VEHICLE INSPECTION FORM

CARRIER	UNIT TYPE	UNIT ID NUMBER

UNIT ITEM CHECKLIST	CODES 1	2	3	COMMENTS
Lights				
Tires				
Wheel Seals				
Brake Lines and Shoes				
Frame and Cross Members				
U-Bolts and Springs				
Torque Arms				
Wheel Rims and Nuts				
TRAILER IDENTIFICATION PLATE per 49 CFR Part 567				

ITEM	LOCATION (check one)		
Front End Structure per 49 CFR Part 393.106	On Trailer	On Tractor	File

Code 1: Out-of-Service; per DOT Out-of-Service Criteria 49 CFR Part 396 per Road Side Inspection Criteria

Code 2: Restricted; Repairs to be completed at offsite location (verification required)

Code 3: Mechanical Condition Acceptable

Supervisor verification of Code 1:Name:_____Date:_____

Supervisor verification of Code 2: Name:_____Date:_____

Comments: _____

_____

Inspectors Name (print)	Badge Number	Date

PRELIMINARY VEHICLE INSPECTION FORM
Figure 1

6888

FEMP
ES&H - RADIOLOGICAL CONTROL
VEHICLE RADIATION MONITORING REPORT Page _____ of _____

DATE MONITORED:	TIME:	TECHNICIAN (PRINT):	TECHNICIAN (SIGNATURE):

CARRIER NAME:

VEHICLE TYPE: ☐ TRACTOR ☐ TRAILER ☐ OTHER MOTOR VEHICLE ☐ RAILCAR ☐ OPEN FLATBED ☐ COVERED

☐ OTHER (EXPLAIN): _____

LICENSE NO. (IF MOTOR VEHICLE):	STATE:	TRAILER OR RAILCAR IDENTIFICATION:	SEAL NUMBER:

VEHICLE STATUS:
☐ (a) OUTGOING
☐ (b) INCOMING
☐ (c) OUTGOING EMPTY
☐ (d) EMPTY, BEFORE LOADING
☐ (e) OTHER: _____

Dose rate shown by asterisks in mr/hr.
Swipe Locations circled.

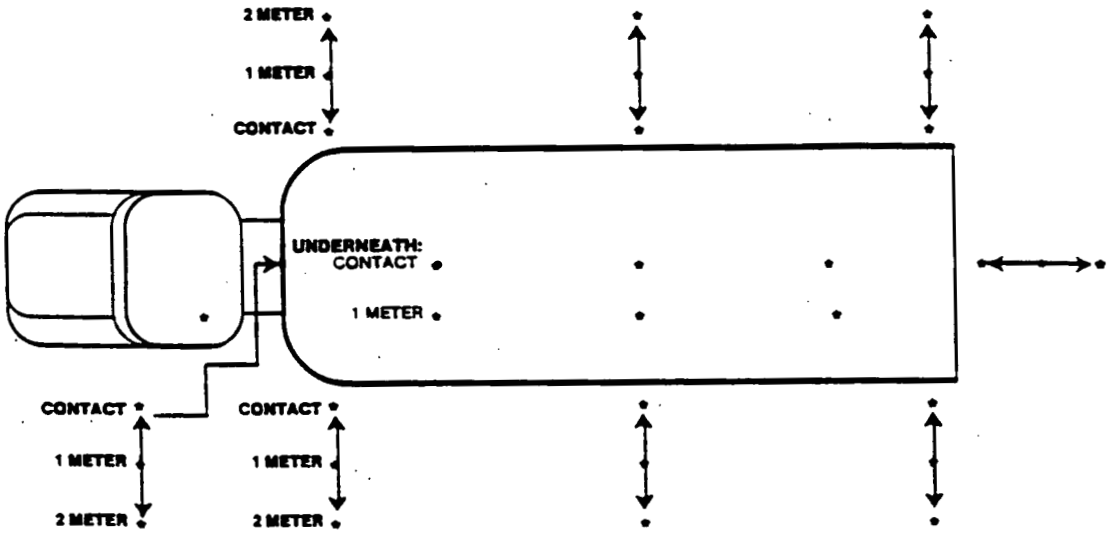

(1) Same locations apply to van-type trucks. For railcars, disregard cab section but show dose rates found at each end.
(2) Measurements at 1 or 2 meters not required if all readings at vehicle surface are not greater than 2 mrem/hr.

SURVEY INSTRUMENTS USED	TYPE:	MODEL NO.:	SERIAL NO.:	CALIBRATION DUE:
	TYPE:	MODEL NO.:	SERIAL NO.:	CALIBRATION DUE:

NO.	DISTRIBUTION OF COPIES
1	RADIOLOGICAL SAFETY (RECORD COPY)
2	TRAFFIC SUPERVISOR
3	QUALITY ASSURANCE

REVIEWED BY:	DATE:

FS-F-1596-1 (REV. 2/15/93)

VEHICLE RADIATION MONITORING REPORT
Form No. FS-F-1596-1
Figure 2

6989

RECORD OF ISSUE/REVISIONS

.TE	REV. NO.	DESCRIPTION AND AUTHORITY
12-05-94	0	Procedure required for Inbound Carrier Inspection for LLRW Off-Site Shipment per Request No. P94-0516, initiated by J. Stoffer.

WASTE PROGRAMS MANAGEMENT PROCEDURE	Loading Low Level Radioactive Waste (LLRW) Containers on Flatbeds for Off-Site Shipment	50-C-108 TECHNICAL PROCEDURE
(Signature on File) Authorization: M. L. West, Waste Programs Management Manager	Supersedes: None	Issue Date: 12-15-94

TABLE OF CONTENTS

NON-CONTROLLED COPY

1.0 PURPOSE 2

2.0 SCOPE 2

3.0 APPLICABLE DOCUMENTS 2
3.1 Source Documents 2
3.2 Reference Documents 2

4.0 DEFINITIONS 2

5.0 RESPONSIBILITIES 3

6.0 GENERAL 3

7.0 HEALTH AND SAFETY REQUIREMENTS 3

8.0 PROCEDURE 4
8.1 Scheduling Off-Site Shipment of LLRW 4
8.2 Loading LLRW Large Metal Boxes and ISOs 5

RECORD OR ISSUE/REVISIONS 11

LIST OF FIGURES

Figure 1, Blocking Diagram 7

Figure 2, LLW Shipment Checklist and NTS Notification 8

Figure 3, Offsite Loading - Tie-Down Inspection - Vehicle Inspection Form No. FMPC-OPR-2495 9

Figure 4, Weight Ticket Form No. FS-F-238 10

1.0 **PURPOSE**

1.1 The purpose of this document is to establish procedures for safe loading and securing of Low Level Radioactive Waste (LLRW) large metal boxes and ISO containers on flatbed trailers for off-site shipment.

2.0 **SCOPE**

2.1 These procedures apply to all organizations responsible for loading LLRW containers on flatbed trailers at the Fernald Environmental Management Project (FEMP) for shipment to off-site destinations.

3.0 **APPLICABLE DOCUMENTS**

3.1 Source Documents

3.1.1 10 CFR 71, Packaging of Radioactive Material

3.1.2 49 CFR 173, Shippers - General Requirement

3.1.3 D10-00-020, "Remediation Support Operations Division Document System"

3.1.4 D22-00-001, "WPM Division Conduct of Operations Policy"

3.1.5 RM-0012, "Quality Assurance Program Description."

3.2 Reference Documents

3.2.1 01-C-602, "Low Level Radioactive Waste (LLRW) Shipment Preparation"

3.2.2 SSOP-0078, "Packaging Low Level Radioactive Waste (LLRW) into ISO Containers for Off-Site Shipment"

3.2.3 SSOP-0079, "Packaging Low Level Radioactive Waste (LLRW) in Metal Boxes for Shipment to the Nevada Test Site"

3.2.4 50-C-111, "Traffic Documentation For Shipment of Low Level Radioactive Waste (LLRW) to the Nevada Test Site"

3.2.5 50-C-112, "Preparation of Documentation for Shipment of Low Level Radioactive Waste (LLRW) to the Nevada Test Site"

3.2.6 QP 12.04, "Certification of Loading and Shipping of Low Level Radioactive Waste"

3.2.7 QP 12.07, "Certification of Low Level Waste Shipments to NTS"

3.2.8 50-C-102, "Carrier Vehicle Weighing"

4.0 **DEFINITIONS**

4.1 Carrier - Any person engaged in the transportation of passengers or property as a common, contract, private charter, or freight forwarder, as defined in the Interstate Commerce Act, as amended, or by the United States Postal Service.

4.0 DEFINITIONS (cont.)

4.2 International Standards Organization (ISO) Container - A container having a volume of 3000L (64 cubic feet) or more, designed and constructed to permit being lifted with its contents intact, and intended primarily for the containment of LLRW during transportation.

4.3 Large Metal Box - Bulk top loading metal container with exterior divisions of 8 foot high by 8 foot wide by 20 foot long.

4.4 Off-Site - All of the areas outside the main perimeter security fence that are not controlled at all times by guards and security fences.

4.5 Waste Container - A container which meets DOT/NTS waste shipment and disposal requirements.

5.0 RESPONSIBILITIES

5.1 **Waste Operations (Transportation)** - Responsible for assigning personnel and equipment and monitoring the Loading of LLRW for Off-Site Shipment.

5.2 **Low Level Waste Scheduling** - Responsible for preparing the bill of lading and coordinating with carriers the scheduling of Off-Site Shipment of LLRW.

5.3 **Low Level Waste Management** - Responsible for providing guidance on the requirements for Packaging, Loading, On-Site Movement, and Off-Site Shipment of LLRW.

6.0 GENERAL

6.1 Warnings, Cautions, and Notes precede the Item, Step, Sub-Step, Section, or Sub-Section to which they apply.

6.2 Contact Waste Programs Management to schedule carrier transport equipment for use in off-site shipment.

6.3 Ensure containers have been prepared for shipment and inspected per 01-C-602, "Low Level Radioactive Waste (LLRW) Shipment Preparation" and SSOP-0078, "Packaging Low Level Radioactive Waste (LLRW) into ISO Containers for Shipment to the Nevada Test Site" or SSOP-0079, "Packaging Low Level Radioactive (LLRW) in Metal Boxes for Shipment to the Nevada Test Site."

7.0 HEALTH AND SAFETY REQUIREMENTS

7.1 Safety glasses with side shields shall be worn unless other eye protection is specified by supervisor or ES&H.

7.2 Respiratory protection provided by the Supervisor shall be worn when required by ES&H.

7.3 Leather-palmed gloves shall be worn to protect the hands from rough material and contamination.

0 0 0 0

7.0 HEALTH AND SAFETY REQUIREMENTS (cont.)

7.4 HEPA-type filter vacuum cleaners or an ES&H approved vacuum system with current DOP test sticker properly affixed to vacuum shall be used for cleaning.

7.5 Employees shall have reviewed and be familiar with the information contained in Material Safety Data Sheets for the materials being handled.

7.6 Any circumstance which could have resulted in an intake of radioactive materials by inhalation, ingestion, or absorption shall immediately be reported to a Supervisor. The Supervisor shall immediately report the circumstance of possible radioactive materials intake to ES&H Radiological Control Department for evaluation. When the suspect isotope is uranium, the involved personnel shall report to the Urine Sampling Station at the end of their shift to complete an Incident Investigation Report (IIR) (Form No. FS-F-1458), and submit an incident urine sample. The involved personnel shall also report to the Urine Sampling Station at the start of their next shift to submit a follow up urine sample. When the suspect isotope is other than uranium, the involved personnel shall report to the Dosimetry Section of the Radiological Control Department for further determination of actions. Employees are responsible for complying with additional requirements as specified by the Radiological Control Section.

7.7 Any situation which could have resulted in the inhalation, ingestion, or absorption of a hazardous material shall immediately be reported to a Supervisor or to the Assistant Emergency Duty Officer (AEDO), who will immediately report the circumstances to Medical and Industrial Hygiene. The involved personnel shall be directed by the Supervisor or AEDO as to when and where to report for medical evaluation, completion of an Incident Investigation Report (IIR) (Form No. FS-F-1458), and submitting bioassay samples (e.g. blood, urine). Employees are responsible for complying with and additional requirements as specified by ES&H.

8.0 PROCEDURE

8.1 Scheduling Off-Site Shipment of LLRW

WASTE PROGRAMS MANAGEMENT

8.1.1 Ensure containers packaged in accordance with SSOP-0078 and SSOP-0079.

8.1.2 Ensure paperwork prepared in accordance with procedures 01-C-602, 50-C-111 and 50-C-112.

8.1.3 Ensure containers are inspected by Quality Assurance.

8.1.4 Schedule off-site shipment of LLRW.

6989

8.0 **PROCEDURE**(cont.)

8.2 Loading LLRW Large Metal Boxes and ISOs

WASTE OPERATIONS (TRANSPORTATION)

8.2.1 Instruct driver to move vehicle to container loading location.

8.2.2 Load container(s) on the flatbed trailer as follows:

A. Use appropriately rated lifting equipment.

B. Place container(s) on trailer bed to distribute the weight properly per Supervisor's instructions.

8.2.3 Weigh vehicle and record weight in accordance with procedure 50-C-102, "Carrier Vehicle Weighing."

8.2.4 Ensure weight has been correctly recorded on Form No. FS-F-238, "Weight Ticket" (Figure 1) and "Radioactive" placards have been placed on two opposite sides and front and rear of containers.

8.2.5 If two (2) large metal boxes or if one (1) large metal box and one (1) ISO container, or two ISO containers are loaded on the same trailer, butt the boxes together with any ISO doors toward the inside. If only one (1) ISO is loaded, place the doors to the back of the trailer.

NOTE 1: Blocking and strapping may be modified as required for drop-deck trailer.

NOTE 2: Nail all blocking and cleats using 20d nails, with 6 nails per 2x4 and 6 nails per cleat.

8.2.6 Secure container(s) to the flatbed trailer as follows:

A. Nail two (2), 2x4 boards across the front and back of the container(s).

B. Add 2 synthetic web tie-downs over each container.

8.2.7 Move trailer to the temporary holding area, and finish offsite blocking and cleating as follows:

A. Nail 3, 2x4 cleats perpendicular to the 2x4 blocking at an appropriate location onsite before moving offsite for shipment. See Figure 2,A.

B. Nail 3, 2x4 cleats over the first set of cleats covering the 2x4 blocking. See Figure 2,B. Cross section of blocking shown in Figure 2,C.

0880 **PROCEDURE** (cont.)

8.2.8 Inspect loaded trailer and complete following forms:

A. Form No. FMPC-SAML-3065, "LLW Shipment Checklist & NTS Notification." See Figure 3.

B. Form No. FMPC-OPR-2495, "Off-Site Loading - Tie-Down Inspection - Vehicle Inspection." See Figure 4.

8.2.9 Contact Radiological Control to monitor and smear carrier vehicle trailer to verify that contamination levels are in compliance with 49 CFR.

8.2.10 Instruct driver to move vehicle to RIMIA staging area.

8.2.11 Notify Low Level Waste Scheduling that vehicle is loaded and ready for off-site shipment and supply completed documentation for processing.

LOW LEVEL WASTE SCHEDULING

8.2.12 Contact carrier to pick up load.

8.2.13 Upon arrival, provide the carrier with "Driver's Tie-Down Instructions" for the appropriate container per 50-C-111.

8.2.14 Notify Quality Assurance that the shipment tie-downs are ready for inspection.

8.2.15 Ensure tie-downs are inspected and documentation completed per QP 12.[illegible] and QP 12.07, respectively.

6989

FEMP
WEIGHT TICKET DATE:

LOT NUMBER: ▶	GROSS WEIGHT:
DRUM NUMBER: ▶	TARE WEIGHT:
MATERIAL TYPE: ▶	NET WEIGHT:
OPERATOR: ▶	ZERO:
SHIRT: ▶	CHECKWEIGHT:

FS-F-238 (REV. 11/93)

FEMP
WEIGHT TICKET DATE:

LOT NUMBER: ▶	GROSS WEIGHT:
DRUM NUMBER: ▶	TARE WEIGHT:
MATERIAL TYPE: ▶	NET WEIGHT:
OPERATOR: ▶	ZERO:
SHIRT: ▶	CHECKWEIGHT:

FS-F-238 (REV. 11/93)

WEIGHT TICKET
Form No. FS-F-238
Figure 1

e893

FMPC

SECURITY, ACQUISITION & MATERIALS LOGISTICS - TRANSPORTATION SECTION

LLW SHIPMENT CHECKLIST & NTS NOTIFICATION

DATE:	SHIPMENT NO.:	B/L NO.:	SS SO NO.:	CARRIER:	TRAILER NO.:

LSA	DEPARTURE TIME: / ETA: / NOTIFICATION TO NTS: ☐ (FTS 575-6307)
RQ	FROM:
LTD. QTY.	TO:
DRUMS	DATE:
WASTE CERTIFICATION CONTAINER TOTALS. WEIGHTS & CURIES OF LSA/LTD QTY - RQ SHEETS	BY WHOM:
BOXES	TO WHOM:
SMEAR SHEETS	☐ FACSIMILE SENT ☐ DRIVER GIVEN DOSIMETER BADGE
WASTE MANAGEMENT STORAGE & DISPOSAL SHEETS DELIVERED — PER NTS	MONITORING REPORTS:
TALLY SHEETS	
CARRIER/DRIVER INSTRUCTION PACK (2)	
NEVADA PERMIT	
INCOMING/EMPTY BEFORE LOADING	
OUTGOING/LOADED	
TRACTOR CAB	
OFFSITE LOADING-TIE DOWN-VEHICLE INSPECTION REPORT	
WEIGHT TICKET	
CHECKED TALLY SHEET (BY CHECKER)	
DRIVER RECEIVES: COPY OF B/L, TALLY SHEET, INSTRUCTION PACK, NEVADA PERMIT, & ENVELOPE FOR CONSIGNEE WITH TALLY SHEET & MEMO B/L	

SPECIALIST A/TRAFFIC	TRANSPORTATION SUPERVISOR (REVIEW)	TRAFFIC MANAGER (REVIEW)

CONDITION OF CONTAINERS	LOADERS:
CONTAINER PROPERLY LABELED	
RADIOACTIVE PLACARDS (FOR LSA ONLY)	
ENVELOPE WITH STORAGE & DISPOSAL SHEETS AND TALLY SHEETS IN TRAILER	
TRAILER LINED WITH PLASTIC & CARDBOARD ON FLOOR— SCRAP WOODEN PALLETS AND/OR BOXES ENCLOSED WITH PLASTIC AS ONE PACKAGE	
Transportation Supervisor: _____	

FMPC-SAML-3085 (4/1/93)

BLOCKING DIAGRAM
Figure 2

6989

FMPC
OPERATIONS DEPARTMENT TRANSPORTATION SECTION

OFFSITE LOADING — TIE DOWN INSPECTION — VEHICLE INSPECTION

Date ______________

COMMODITY	CARRIER	TRAILER NO	B/L NO
			FA-WMCO

BALE, BOX, DRUM/SEA LAND CONTAINER NUMBERS.

LSA ______
LSA-RO ______
LO ______
LO-RO ______
TOTAL ______

DISCREPANCIES DETECTED	CORRECTED YES	CORRECTED NO	SHIPMENT REJECTED YES	SHIPMENT REJECTED NO

Checked By ______________

TIE-DOWN INSPECTION AND CHECK-OFF SHEET

INSPECTION ITEM	YES	NO
[illegible]		
[illegible]		
[illegible] 20 000 [illegible]		
[illegible]		
[illegible]		
[illegible]		
[illegible] 107 [illegible]		
[illegible] 2" [illegible]		
Sea Land Containers [illegible]		

VEHICLE INSPECTION REPORT

CONDITION	PASS	FAIL	CONDITION	PASS	FAIL	CONDITION	YES	NO
Condition of Floor			Condition of Sides			Detected Sabotage Devices		
Condition of Interior			Condition of Exterior			Detected Evidence of Sabotage		
Condition of Roof			Condition of Rear Doors					

Overall assessment: ______________ General Comments: ______________

Accepted: ______________ Rejected ______________

Checked By: ______________

NO.	DISTRIBUTION OF COPIES
1	Transportation Section - RECORD COPY

LLW SHIPMENT CHECKLIST AND NTS NOTIFICATION
Form No. FMPC-SAML-3065
Figure 3

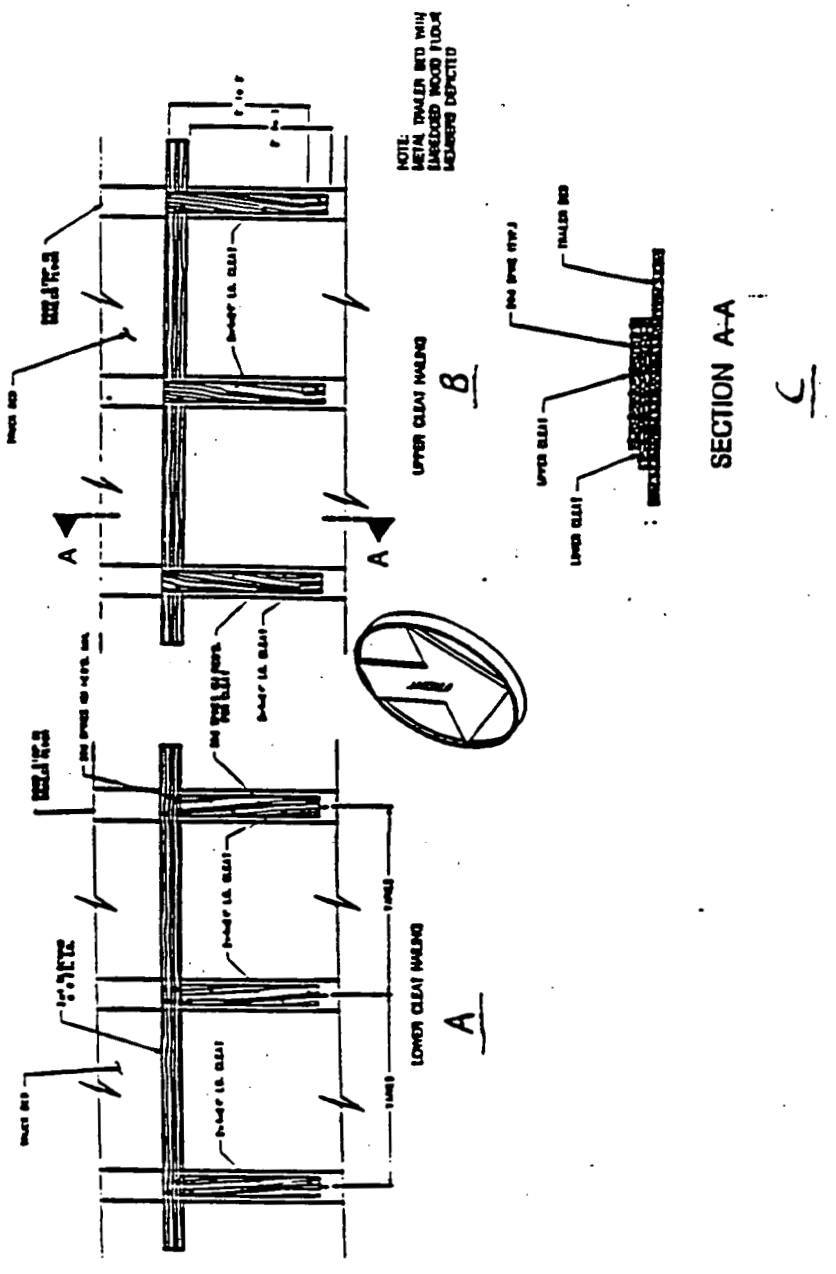

OFFSITE LOADING-TIE DOWN INSPECTION-VEHICLE INSPECTION
Form No. FMPC-OPR-2495
Figure 4

6989

RECORD OF ISSUE/REVISIONS

DATE	REV. NO.	DESCRIPTION AND AUTHORITY
12-15-94	0	Procedure required for Loading of Low Level Radioactive Waste (LLRW) Containers on Flatbeds for Off-Site Shipment per Request No. P94-0589 initiated by J. Stoffer.

WASTE PROGRAMS MANAGEMENT PROCEDURE	Loading Low Level Radioactive Waste (LLRW) Containers on Vans for Off-Site Shipment	50-C-109 TECHNICAL PROCEDURE
(Signature on File) Authorization: M. L. West, Waste Programs Management Manager	Supersedes: None	Issue Date: 12-15-94

TABLE OF CONTENTS

NON-CONTROLLED COPY

1.0 PURPOSE 2

2.0 SCOPE 2

3.0 APPLICABLE DOCUMENTS 2
- 3.1 Source Documents 2
- 3.2 Reference Documents 2

4.0 DEFINITIONS 2

5.0 RESPONSIBILITIES 3

6.0 GENERAL 3

7.0 HEALTH AND SAFETY REQUIREMENTS 3

8.0 PROCEDURE 4
- 8.1 Work to be Completed Prior to Scheduling 4
- 8.2 Loading LLRW Small White Metal Boxes 4
- 8.3 Loading Drums 6
- 8.4 Inspecting and Weighing Loaded Vans 6

RECORD OF ISSUE/REVISIONS 12

LIST OF FIGURES

Figure 1, Typical Blocking Diagram for Small White Metal Boxes on Vans 7

Figure 2, Typical Blocking Diagram for Drums on Vans 8

Figure 3, LLW Shipment checklist and NTS Notification 9

Figure 4, Offsite Loading - Tie-Down Inspection - Vehicle Inspection 10

Figure 5, Weight Ticket 11

1.0 PURPOSE

The purpose of this document is to establish a procedure for safe loading and securing of Low Level Radioactive Waste (LLRW) in small white metal boxes in vans for off-site shipment.

2.0 SCOPE

This procedure applies to all organizations responsible for loading and securing LLRW containers at the Fernald Environmental Management Project (FEMP) for shipment to off-site destinations.

3.0 APPLICABLE DOCUMENTS

3.1 Source Documents

3.1.1 10 CFR 71, Packaging of Radioactive Material

3.1.2 49 CFR 173, Shippers - General Requirement

3.1.3 D10-00-020, "Remediation Support Operations Division Document System"

3.1.4 RM-0012, "Quality Assurance Program Description."

3.2 Reference Documents

3.2.1 01-C-602, "Low Level Radioactive Waste (LLRW) Shipment Preparation"

3.2.2 SSOP-0079, "Packaging Low Level Radioactive Waste (LLRW) in Metal Boxes for Shipment to the Nevada Test Site (NTS)"

3.2.3 SSOP-0075, "Packaging Low Level Radioactive Waste (LLRW) in Drums for Shipment to the Nevada Test Site (NTS)"

3.2.4 50-C-111, "Traffic Documentation For Shipment of Low Level Radioactive Waste (LLRW) to the Nevada Test Site"

3.2.5 50-C-112, "Preparation of Documentation for Shipment of Low Level Radioactive Waste (LLRW) to the Nevada Test Site"

3.2.6 QP 12.04, "Certification of Loading and Shipping of Low Level Radioactive Waste"

3.2.7 QP 12.07, "Certification of Low Level Waste Shipments to NTS"

3.2.8 50-C-102, "Carrier Vehicle Weighing"

4.0 DEFINITIONS

4.1 Carrier - Any person engaged in the transportation of passengers or property as a common, contract, private charter, or freight forwarder, as defined in the Interstate Commerce Act, as amended, or by the United States Postal Service.

4.0 **DEFINITIONS** (cont.)

4.2 Drums - Metal containers designed to meet the performance specifications in 49 CFR. The drum container sizes in this procedure refer to 30, 55, 80 and 110 gallon.

4.3 Small White Metal Box -A bulk metal container with exterior dimensions of 4 foot high by 4 foot wide by 7 foot long.

4.4 Off-Site - All of the areas outside the main perimeter security fence that are not controlled at all times by guards and security fences.

4.5 Waste Container - A container which meets DOT/NTS waste shipment and disposal requirements.

5.0 **RESPONSIBILITIES**

5.1 **Waste Operations (Transportation)** - Responsible for assigning personnel and equipment and monitoring the loading of LLRW for off-site shipment.

5.2 **Low Level Waste Scheduling** - Responsible for preparing the bill of lading and coordinating with carriers the scheduling of off-site shipment of LLRW.

5.3 **Low Level Waste Management** - Responsible for providing guidance on the requirements for packaging, loading, on-site movement, and off-site shipment of LLRW.

6.0 **GENERAL**

6.1 Warnings, Cautions, and Notes precede the Step, Sub-Step, Section, Sub-Section, or Item to which they apply.

6.2 Contact Low Level Waste Scheduling to schedule carrier transport equipment for use in off-site shipment.

6.3 Ensure containers have been prepared for shipment and inspected per procedure 01-C-602, "Low Level Radioactive Waste (LLRW) Shipment Preparation" and SSOP-0075, "Packaging Low Level Radioactive Waste (LLRW) in Drums for Shipment to the Nevada Test Site (NTS), or SSOP-0079, "Packaging Low Level Radioactive (LLRW) in Metal Boxes for Shipment to the Nevada Test Site (NTS)."

7.0 **HEALTH AND SAFETY REQUIREMENTS**

7.1 Safety glasses with side shields shall be worn unless other eye protection is specified by Supervisor or ES&H.

7.2 Respiratory protection provided by the supervisor shall be worn when required by ES&H.

7.3 Leather-palmed gloves shall be worn to protect the hands from rough material and contamination.

7.0 HEALTH AND SAFETY REQUIREMENTS (cont.)

7.4 HEPA-type filter vacuum cleaners or an ES&H approved vacuum system with current DOP test sticker properly affixed to vacuum shall be used for cleaning.

7.5 Employees shall have reviewed and be familiar with the information contained in Material Safety Data Sheets for the materials being handled.

7.6 Any circumstance which could have resulted in an intake of radioactive materials by inhalation, ingestion, or absorption shall immediately be reported to a Supervisor. The Supervisor shall immediately report the circumstance of possible radioactive materials intake to ES&H Radiological Control Department for evaluation. When the suspect isotope is uranium, the involved personnel shall report to the Urine Sampling Station at the end of their shift to complete an Incident Investigation Report (IIR) (Form No. FS-F-1458), and submit an incident urine sample. The involved personnel shall also report to the Urine Sampling Station at the start of their next shift to submit a follow up urine sample. When the suspect isotope is other than uranium, the involved personnel shall report to the Dosimetry Section of the Radiological Control Department for further determination of actions. Employees are responsible for complying with additional requirements as specified by the Radiological Control Section.

7.7 Any situation which could have resulted in the inhalation, ingestion, or absorption of a hazardous material shall immediately be reported to a Supervisor or to the Assistant Emergency Duty Officer (AEDO), who will immediately report the circumstances to Medical and Industrial Hygiene. The involved personnel shall be directed by the Supervisor or AEDO as to when and where to report for medical evaluation, completion of an Incident Investigation Report (IIR) (Form No. FS-F-1458), and submitting bioassay samples (e.g. blood, urine). Employees are responsible for complying with and additional requirements as specified by ES&H.

8.0 PROCEDURE

8.1 Work to be completed prior to scheduling off-site shipment of LLRW.

LOW LEVEL WASTE SCHEDULING

8.1.1 Containers packaged in accordance with SSOP-0075 and SSOP-0079.

8.1.2 Waste packages and paperwork prepared in accordance with procedures 01-C-602, 50-C-111 and 50-C-112.

8.1.3 Ensure containers are inspected.

8.2 Loading LLRW Small White Metal Boxes

WASTE OPERATIONS (TRANSPORTATION)

8.2.1 Instruct driver to move vehicle to container loading location.

4) Step 8.2.5 is revised to read as follows:

8.2.5 The first small white metal box is placed flush against the bulkhead in the front of the van. The rest of the boxes to be placed in the front of the van are to be against one another.

0206

0883

0763A

REMEDIATION SUPPORT OPERATIONS TEMPORARY CHANGE NOTICE (TCN)

1

ONLY ONE TCN CHANGE PERMITTED PER DOCUMENT PAGE

(Sheet 1 of 2)

1. **NOTE: TCN not valid without Supervisor signature, Manager initials and Operator signature (when required).**

SUPERVISOR: Shane Stierhoff EXT: 9453 SIGNATURE: (Signature on File)

OPERATOR: Jim Stoffer EXT: 6484 SIGNATURE: (Signature on File)

DOCUMENT OWNER: Jeff Rowe SUPV. ORG.: WPM CHARGE NUMBER: 8ABB1

2. EFFECTIVE DATE OF CHANGE: 04-17-95

3. EXPIRATION DATE OF CHANGE: 07-01-95 ***NOTE: Maximum effective period six months.***

4. AFFECTED DOCUMENT NUMBER: 50-C-109

5. AFFECTED PAGE NUMBER 5

NON-CONTROLLED COPY

6. DOCUMENT ISSUE DATE: 12-15-94 REVISION NUMBER: 0

Enter each item number and associated change separately.

1) NOTE 2 is revised and NOTE 3 is added as follows:

NOTE 2: Figure 1 shows a typical load with 2 x 4 board placement in a van with a wood deck.

NOTE 3: Figure 1A shows a typical load with 2 x 4 board placement in a van with a steel deck at the front end.

2) Step 8.2.3 has been DELETED.

8.2.3 DELETED

3) Step 8.2.4 is revised to read as follows:

8.2.4 Nail 2, 2 x 4 boards 2 inches further apart than the length of the boxes to be loaded to secure the small white metal boxes to be placed in the front of the van. These 2 x 4 boards are to be of an appropriate length to secure the number of boxes placed in the front of the van.

8. PROCEDURE ADMINISTRATION TCN ACTION REQUIRED (Check as Appropriate)

8a. ☐ EFFECTIVE PERIOD > 30 DAYS. DISTRIBUTE TCN AND INCORPORATE INTO AFFECTED DOCUMENT BEFORE TCN EXPIRES.

8b. ☐ EFFECTIVE PERIOD > 30 DAYS. DISTRIBUTE TCN BUT DO NOT INCORPORATE. ALLOW TCN TO EXPIRE.

8c. ☐ EFFECTIVE PERIOD < 30 DAYS. DO NOT DISTRIBUTE. ALLOW TCN TO EXPIRE.

001048

8.0 **PROCEDURE** (cont.)

8.2.2 Load container(s) in vans as follows:

A. Use appropriately rated lifting equipment.

B. Place container(s) in vans to distribute the weight properly per Supervisor's instructions.

NOTE 1: Nail all 2x4 blocking with 16d double headed nails at least every 18 inches.

NOTE 2: Figure 1 shows a typical load with 2x4 board placement.

8.2.3 Place a 2x4 board against the front end of the van and nail flat to the floor. If necessary, extend 2X4 boards from 8.2.4 over metal plates in front of van and nail the 2X4 board to these extensions.

8.2.4 Nail 2, 2x4 boards 72 inches apart to secure the small white metal boxes to be placed in the front of the van. These 2x4 boards are to be of an appropriate length to secure the number of boxes placed in the front of the van.

8.2.5 The first small white metal box is placed flush against the 2x4 in the front of the van. The rest of the boxes to be placed in the front of the van are to be against one another.

8.2.6 A 2x4 board is to be nailed against the back of the boxes placed in the front of the van.

8.2.7 Depending on the number of boxes to be placed in the rear of the van, nail 2, appropriate length 2x4 boards perpendicular to the board secured to the van in the step 8.2.6.

8.2.8 Nail a 2x4 board perpendicular to the boards secured in step 8.2.7.

8.2.9 Nail 2, 2x4 boards 72 inches apart to secure the small white metal boxes to be placed in the rear of the van. These 2x4 boards are to be of an appropriate length to secure the number of boxes placed in the rear of the van.

8.2.10 Place the first small white metal box in the rear against the 2x4 board secured in 8.2.8. The rest of the boxes to be placed in the back of the van are to be against one another.

8.2.11 Nail one 2x4 board against the back of the last box. If necessary, extend the side 2X4 boards in step 8.2.9 beyond the back of the box, and nail a 2X4 board to these extensions across the back of the last box.

8.0 **PROCEDURE** (cont.)

8.3 Loading Drums

WASTE OPERATIONS (TRANSPORTATION)

NOTE: Figure 2 shows typical loading for 55 gallon drums.

8.3.1 Using a Lift-O-Matic lifting device, two drums can be lifted with a forktruck and placed in the front corner of the cargo area. Depending on the number and type of drums being loaded, the load is distributed between the front and back of the van.

8.3.2 The container lid ring bolts are placed, such that, they will not damage the adjacent drums and allow for good contact with surrounding drums.

8.3.3 If the number of drums to be loaded is not sufficient to fill the van, the middle of the van is blocked as shown in Figure 2 to secure the drums from shifting in transit.

8.4 Inspecting and Weighing Loaded Vans

WASTE OPERATIONS (TRANSPORTATION)

8.4.1 Inspect loaded van and complete the following forms:

A. Form No. FMPC-SAML-3065, "LLW Shipment Checklist & NTS Notification." See Figure 3.

B. Form No. FMPC-OPR-2495, "Off-Site Loading - Tie Down Inspection - Vehicle Inspection." See Figure 4.

8.4.2 Contact Radiological Control to monitor and smear carrier vehicle trailer to verify that contamination levels are in compliance with 49 CFR.

8.4.3 Instruct driver to move vehicle to truck scale to be weighed in accordance with procedure 50-C-102, "Carrier Vehicle Weighing".

8.4.4 Weigh vehicle and record weight.

8.4.5 Ensure weight has been correctly recorded on Form No. FS-F-238, "Weight Ticket" (Figure 5) and "Radioactive" placards have been placed on two opposite sides and front and rear of containers.

8.4.6 Instruct driver to move vehicle to RIMIA staging area.

8.4.7 Notify Low Level Waste Scheduling that vehicle is loaded and ready for off-site shipment and supply completed documentation for processing.

LOW LEVEL WASTE SCHEDULING

8.4.8 Contact carrier to pickup load.

8.4.9 Ensure documentation is completed per QP 12.07 and QP 12.04.

REMEDIATION SUPPORT OPERATIONS TEMPORARY CHANGE NOTICE (TCN)

6989

1

ONLY ONE TCN CHANGE PERMITTED PER DOCUMENT PAGE

1. **NOTE: TCN not valid without Supervisor signature, Manager initials and Operator signature (when required).**

SUPERVISOR: Dale A. Vizedom EXT: 6478 SIGNATURE: (Signature on File)

OPERATOR: N/A EXT: SIGNATURE: (Signature on File)

DOCUMENT OWNER: M.L. West SUPV. ORG.: WPM CHARGE NUMBER: 8ADC1

2. EFFECTIVE DATE OF CHANGE: 01-13-95

3. EXPIRATION DATE OF CHANGE: 07-13-95 ***NOTE: Maximum effective period six months.***

4. AFFECTED DOCUMENT NUMBER: 50-C-109

NON-CONTROLLED COPY

5. AFFECTED PAGE NUMBER 6

6. DOCUMENT ISSUE DATE: 12-15-94 REVISION NUMBER: 0

7. CHANGE (Use additional sheets of paper if necessary):
Enter each item number and associated change separately.

1) Step 8.3.3 is revised to read as follows:

8.3.3 If the number of drums to be loaded is not sufficient to fill the van, the middle of the van is blocked as shown in Figure 2 to secure the drums from shifting and the drums are banded as separate units. Any grouping of drums will be banded together as separate units.

8. PROCEDURE ADMINISTRATION TCN ACTION REQUIRED (Check as Appropriate)

8a. ☐ EFFECTIVE PERIOD > 30 DAYS. DISTRIBUTE TCN AND INCORPORATE INTO AFFECTED DOCUMENT BEFORE TCN EXPIRES.

8b. ☐ EFFECTIVE PERIOD > 30 DAYS. DISTRIBUTE TCN BUT DO NOT INCORPORATE. ALLOW TCN TO EXPIRE.

8c. ☐ EFFECTIVE PERIOD < 30 DAYS. DO NOT DISTRIBUTE. ALLOW TCN TO EXPIRE.

6989

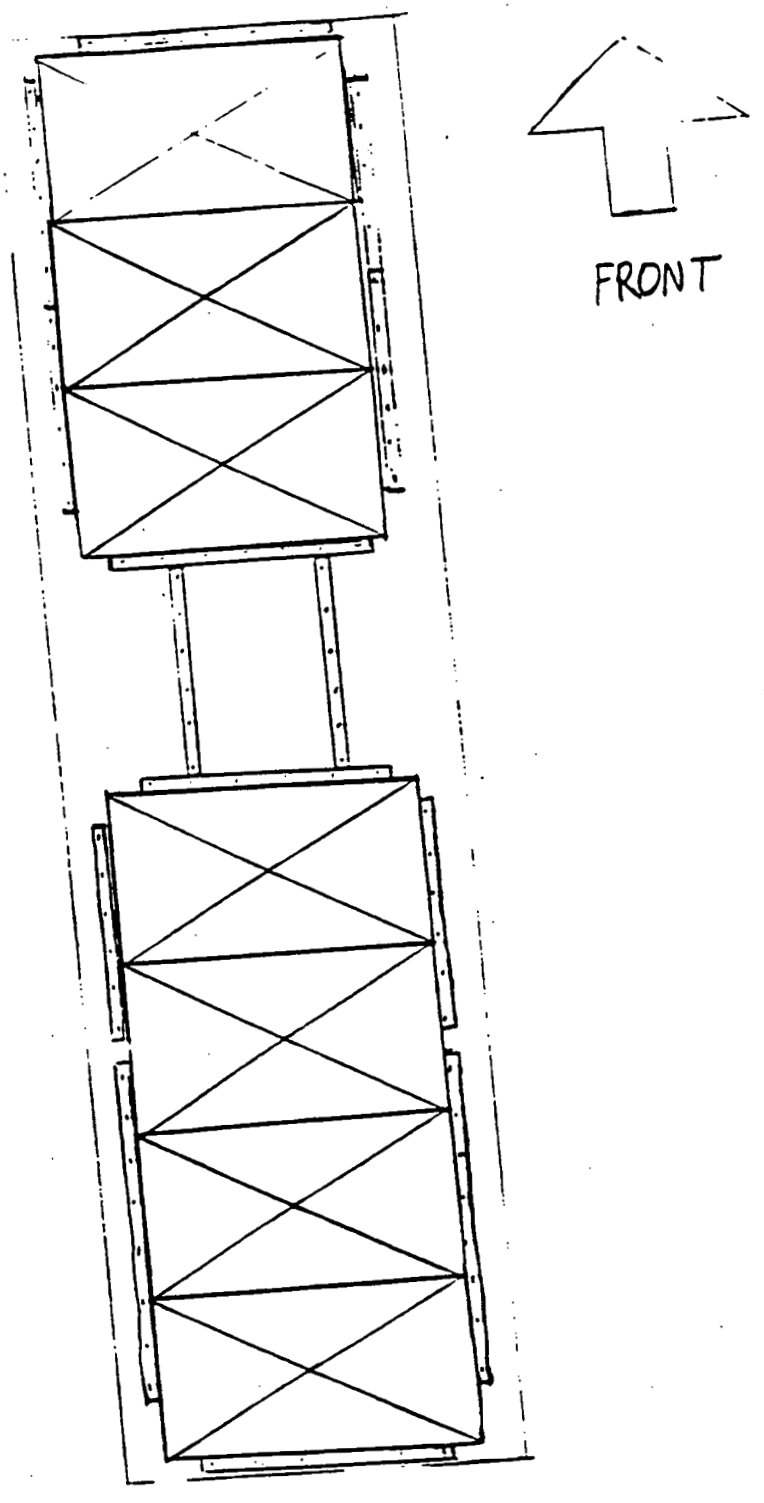

BLOCKING DIAGRAM FOR SMALL WHITE METAL BOXES ON VANS
Figure 1

0080

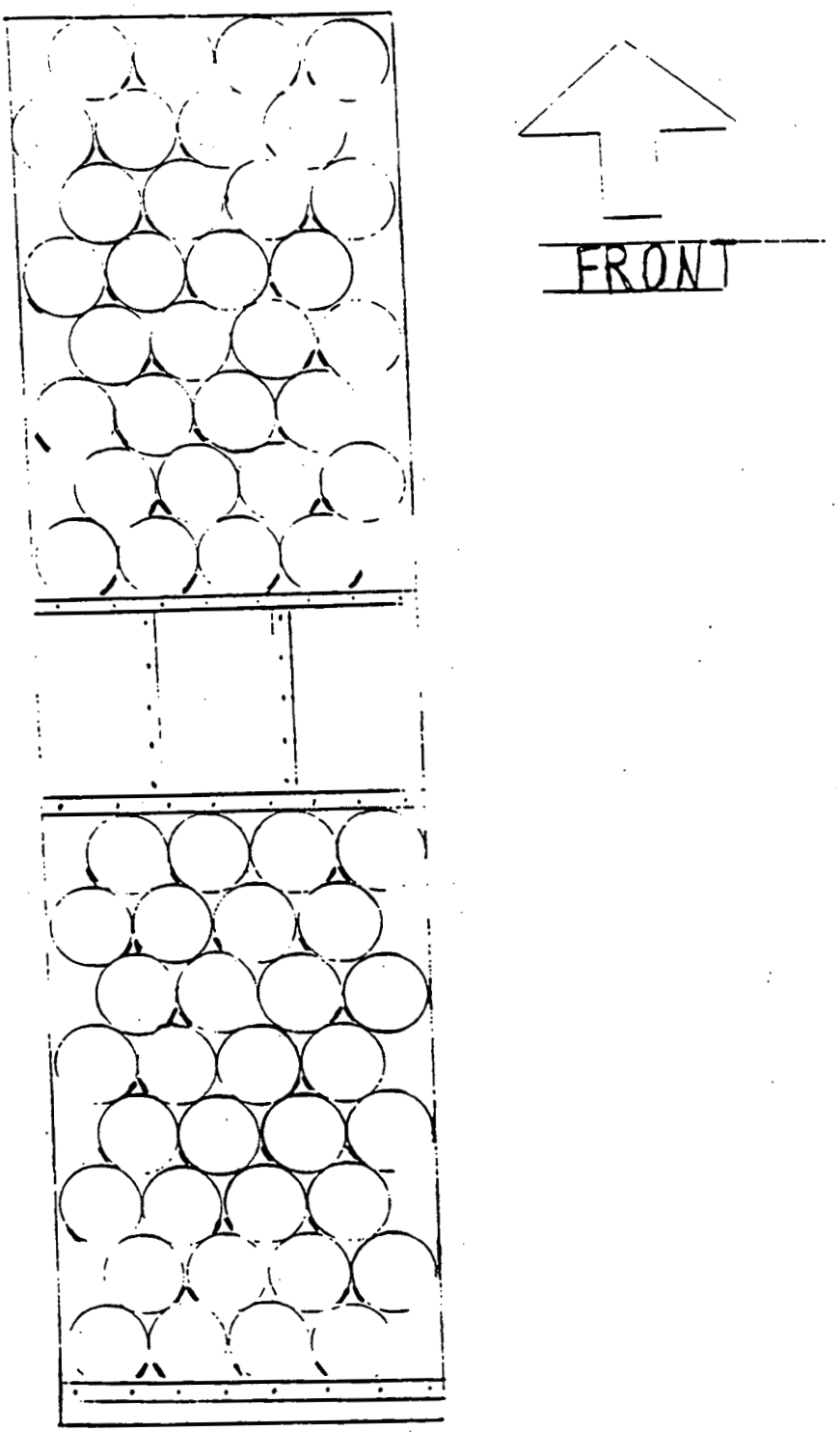

BLOCKING DIAGRAM FOR DRUMS ON VANS
Figure 2

6989

FMPC

SECURITY, ACQUISITION & MATERIALS LOGISTICS - TRANSPORTATION SECTION

LLW SHIPMENT CHECKLIST & NTS NOTIFICATION

DATE:	SHIPMENT NO.:	B/L NO.:	SS SO NO.:	CARRIER:	TRAILER NO.:

LSA	DEPARTURE TIME: / ETA: / NOTIFICATION TO NTS: ☐ (FTS 575-6307)
RQ	FROM:
LTD. QTY.	TO:
DRUMS	DATE:
WASTE CERTIFICATION CONTAINER TOTALS, WEIGHTS & CURIES OF LSA/LTD QTY - RQ SHEETS	BY WHOM:
BOXES	TO WHOM:
SMEAR SHEETS	☐ FACSIMILE SENT / ☐ DRIVER GIVEN DOSIMETER BADGE
WASTE MANAGEMENT STORAGE & DISPOSAL SHEETS DELIVERED — PER NTS	MONITORING REPORTS:
TALLY SHEETS	
CARRIER/DRIVER INSTRUCTION PACK (2)	
NEVADA PERMIT	
INCOMING/EMPTY BEFORE LOADING	
OUTGOING/LOADED	
TRACTOR CAB	
OFFSITE LOADING-TIE DOWN-VEHICLE INSPECTION REPORT	
WEIGHT TICKET	
CHECKED TALLY SHEET (BY CHECKER)	
DRIVER RECEIVES COPY OF B/L, TALLY SHEET, INSTRUCTION PACK, NEVADA PERMIT, & ENVELOPE FOR CONSIGNEE WITH TALLY SHEET & MEMO B/L	

SPECIALIST A/TRAFFIC	TRANSPORTATION SUPERVISOR (REVIEW)	TRAFFIC MANAGER (REVIEW)

CONDITION OF CONTAINERS	LOADERS:
CONTAINER PROPERLY LABELED	
RADIOACTIVE PLACARDS (FOR LSA ONLY)	
ENVELOPE WITH STORAGE & DISPOSAL SHEETS AND TALLY SHEETS IN TRAILER	
TRAILER LINED WITH PLASTIC & CARDBOARD ON FLOOR— SCRAP WOODEN PALLETS AND/OR BOXES ENCLOSED WITH PLASTIC AS ONE PACKAGE	

Transportation Supervisor: _____

FMPC-SAML-3065 (4/94)

LLW SHIPMENT CHECKLIST AND NTS NOTIFICATION
Form No. FMPC-SAML-3065
Figure 3

0809

FMPC
OPERATIONS DEPARTMENT - TRANSPORTATION SECTION

OFFSITE LOADING — TIE DOWN INSPECTION — VEHICLE INSPECTION

Date _____

COMMODITY	CARGO	TRAILER NO	MAN NO
			FA-WMCO

BALE/BOX/DRUM/SEA LAND CONTAINER NUMBERS

LSA _____
LSA-RO _____
LQ _____
LQ-RO _____
TOTAL _____

DISCREPANCIES DETECTED	CORRECTED: YES	CORRECTED: NO	SHIPMENT REJECTED: YES	SHIPMENT REJECTED: NO

Checked By _____ (Signature - Checker)

TIE-DOWN INSPECTION AND CHECK-OFF SHEET

INSPECTION ITEM	YES	NO
Wood bracing attached to ground configuration or rotary [illegible]		
Steel strapping securing the cargo securing as a stacked shipment		
When weight exceeds [illegible] containers divided into two units, one right and one rear of trailer not exceeding approximately 20,000 pounds each		
1 ½" steel strapping valued (5450 lbs. minimum tensile strength)		
each bracket consists of 1/2" bolts fastened to underframe; each 5-20 of which is alone and secured for [illegible]		
For each bracket consists of 1/2" bolts fastened to underframe with for each bracket checked under each unit and secured for two configurations; bungs securing the doors, doors and one right unit, attached to the rear of the trailer		
[illegible] 107 chrome [illegible]		
Anchor and bracket consists secured with eight each 5/8" [illegible]		
Sea Land Container		

4 each [illegible] _____
Chains _____
[illegible] _____

VEHICLE INSPECTION REPORT

CONDITION	PASS	FAIL	CONDITION	PASS	FAIL	CONDITION	YES	NO
Condition of Floor			Condition of Sides			Detected Sabotage Devices		
Condition of Interior			Condition of Exterior			Detected Evidence of Sabotage		
Condition of Roof			Condition of Rear Doors					

Overall appearance: _____

General Comments: _____

Accepted: _____ Rejected _____

Checked By: _____ (Signature - Transportation Supervisor)

NO.	DISTRIBUTION OF COPIES
1	Transportation Section - RECORD COPY

FMPC-OPR-2495 (REV 0, 12-15-94)

OFFSITE LOADING - TIE-DOWN INSPECTION - VEHICLE INSPECTION
Form No. FMPC-OPR-2495
Figure 4

6989

FEMP
WEIGHT TICKET DATE:

LOT NUMBER: ▶	GROSS WEIGHT:
DRUM NUMBER: ▶	TARE WEIGHT:
MATERIAL TYPE: ▶	NET WEIGHT:
OPERATOR: ▶	ZERO:
SHIRT: ▶	CHECKWEIGHT:

FS-F-238 (REV. 1/1/93)

FEMP
WEIGHT TICKET DATE:

LOT NUMBER: ▶	GROSS WEIGHT:
DRUM NUMBER: ▶	TARE WEIGHT:
MATERIAL TYPE: ▶	NET WEIGHT:
OPERATOR: ▶	ZERO:
SHIRT: ▶	CHECKWEIGHT:

FS-F-238 (REV. 1/1/93)

WEIGHT TICKET
Form No. FS-F-238
Figure 5

0808

RECORD OF ISSUE/REVISIONS

DATE	REV. NO.	DESCRIPTION AND AUTHORITY
12-15-94	0	New document requirement to establish LLRW Loading and Securing Procedures in Vans per Request No. P94-0595, initiated by J. Stoffer.

6989

NON-CONTROLLED COPY

FERMCO Restoration Management Corporation	ENVIRONMENTAL SAFETY AND HEALTH DIVISION RADIOLOGICAL CONTROL RADIOLOGICAL ASSESSMENT	PROC NO: RC-RDA-006 EFFECTIVE DATE: 10/05/94 REVISION NO: 1
TITLE: Radiological Survey Requirements for Radioactive Material Shipping and Receiving		PAGE 1 OF 18 AUTHOR: C. D. Nelson
APPROVAL: Michael C. Tester, Manager, Radiological Control		DATE: 9/30/94

Supersedes SP-P-35-009, Rev. 4

TABLE OF CONTENTS

SECTION	TITLE	PAGE
	SUMMARY LOG	2
1.0	PURPOSE	3
2.0	SCOPE	3
3.0	REFERENCES	3
4.0	DEFINITIONS	4
5.0	RESPONSIBILITIES	4
6.0	PROCEDURE	5
6.1	General	5
6.2	Surveys of Radioactive Material Packages	6
6.3	Surveys of Incoming Empty Conveyances.	7
6.4	Surveys of Incoming Loaded Conveyances	8
6.5	Surveys of Outgoing Loaded Conveyances	10
6.6	Documentation	11
6.7	Records Distribution	11
7.0	RECORDS	11
8.0	ATTACHMENTS	11

SUMMARY LOG

Revision Number	Description of Revision	Pages Affected
0	Initial Implementation	All

1.0 PURPOSE

1.1 This procedure establishes the methods for radiologically surveying incoming and outgoing radioactive material packages and conveyances at the Fernald Environmental Management Project (FEMP).

2.0 SCOPE

2.1 This procedure applies to the methods used to perform radiological surveys for incoming and outgoing radioactive material packages and conveyances.

2.2 This procedure does not apply to materials being transported exclusively within FEMP.

2.3 This procedure applies to Radiological Control Technicians (RCTs).

3.0 REFERENCES

3.1 Source Documents

3.1.1 DOE Order 5480.11, Radiation Protection for Occupational Workers

3.1.2 49CFR 170 through 180, Title 49 of the Code of Federal Regulations

3.1.3 DOE/EH-0256T, DOE Radiological Control Manual

3.2 Interface Documents

3.2.1 RC-RDA-010, Radiological Contamination Surveys

3.2.2 RC-RDA-009, Radiation Surveys

3.2.3 SP-P-35-020, Radiological Survey of Vehicles Entering and Exiting the Controlled Areas of the FEMP

3.2.4 SP-P-35-046, Counting Smears with Field Survey Instruments

3.2.5 ED-0001, Event Notification and Occurrence Reporting Procedure

4.0 DEFINITIONS

4.1 **Box Car** - A railroad car with an enclosed top and sliding doors on the sides.

4.2 **Conveyance** - Means for transport by public highway or rail: any transport vehicle or large freight container.

4.3 **Exclusive Use** - The sole use of an conveyance by a single consignor with all loading/unloading carried out under the direction of the consignor/consignee.

4.4 **Flatcar** - A railroad car without permanent raised sides, ends, or covering.

4.5 **Gondola** - A railroad car with a flat bottom, fixed sides and no top used chiefly for hauling heavy bulk material.

4.6 **Package** - The packaging, together with its radioactive contents, as received or presented for transport.

4.7 **Radioactive Material** - Any material/equipment determined to be contaminated, or potentially contaminated, is considered radioactive material. Radioactive material includes activated material, sealed/unsealed sources and material emitting radiation.

4.8 **Verification Contamination Survey** - A survey for loose contamination performed within 8 hours of the loading process. Verification surveys are much less detailed than the initial shipping survey. A large-area swipe on accessible surfaces of a portion of the shipping packages will provide sufficient data to ensure the shipment has not been contaminated during shipment preparations and the staging process.

5.0 RESPONSIBILITIES

5.1 <u>Radiological Control Technician (RCT)</u>

5.1.1 Perform contamination and dose rate surveys on packages and conveyances.

5.1.2 Completes required reports.

5.1.3 Distributes reports.

6.0 PROCEDURE

6.1 General

Radiological Control Technician (RCT)

6.1.1 Equipment list:

A. Beta-Gamma (Geiger-Mueller pancake probe) survey meter
B. Alpha (scintillation probe) survey meter
C. Portable scaler
D. G-M Side Window portable survey meter, teletector/telescan or Bicron Micro-Rem survey meter
E. Low background Alpha/Beta-Gamma proportional counting system
F. Dry paper or cloth swipes
G. Wipes used for large areas loose contamination surveying such as masslin
H. Radiological security seals
I. Gloves

6.1.2 The following forms are used to support radioactive material shipping:

A. Form FS-F-1993-1, Radiological Survey Report (see Attachment A, Radiological Survey Report).

B. Form FS-F-1993-2, Radiological Survey Report Continuation Sheet (see Attachment B, Radiological Survey Report Continuation Sheet) - If more space is required.

C. Form FS-IRS&T-1596-1, Vehicle Radiation Monitoring Report (see Attachment C, Vehicle Radiation Monitoring Report) - Survey report for incoming and outgoing van trailers or flat beds.

D. Form FS-F-3965, Conveyance Survey Confirmation (see Attachment F, Conveyance Survey Confirmation) - Form used to notify personnel that radiological surveys have been performed on a conveyance and the conveyance meets the requirements of this procedure.

6.1.3 Shipments require radiological surveys at these stages:

A. Incoming and outgoing radioactive material package, see Section 6.2.

B. Incoming empty conveyance, see Section 6.3.

C. Incoming loaded conveyance, see Section 6.4.

D. Outgoing loaded conveyance, see Section 6.5.

E. Outgoing empty conveyance, consult SP-P-35-020, Radiological Survey of Vehicles Entering and Exiting the Controlled Areas of the FEMP.

6.1.4 Remove radiological security seals from all van trailers prior to loading.

6.2 Survey Radioactive Material Packages

6.2.1 On *incoming* radioactive material packages, observe these restrictions:

A. IF an incoming radioactive material packages is received during normal working hours, THEN survey within 3 hours of receipt.

B. IF a radioactive material package is received after normal working hours, THEN survey as soon as possible, but no later than 3 hours after the beginning of the next working day.

C. IF an incoming material is a radioactive source, THEN contact the Site Source Controller.

6.2.2 On *outgoing* radioactive material packages, observe these restrictions:

A. Perform a verification contamination swipe survey of the packages within 8 hours of loading the packages into a conveyance.

B. IF the original contamination survey was completed within 8 hours of loading the packages into a conveyance, THEN the verification contamination swipe survey need not be performed.

6.2.3 Swipe incoming and outgoing radioactive material packages according to RC-RDA-010, Radiological Contamination Surveys.

A. Swipe in the most appropriate locations to yield a representative assessment of the removable contamination levels.

B. Swipe all sides including the tops and bottoms of each package.

C. Swipe at least 300 cm^2 of each package.

D. IF a package is less than 300 cm^2, THEN swipe the entire surface of the package.

E. Analyze the swipes for both alpha and beta/gamma contamination according to RC-RDA-010, Radiological Contamination Surveys and SP-P-35-046, Counting Smears with Field Survey Instruments.

6.2.4 Record contamination survey results on Radiological Survey Report (see Attachment A AND B, Radiological Survey Report and Continuation Sheet, FS-F-1993-1 and FS-F-1993-2).

6.2.5 Perform a contact radiation dose rate survey on all sides of each package.

6.2.6 Record the highest dose rate observed on Attachment A AND (Attachment B when applicable).

A. IF contact radiation dose rates are less than (<) 0.5 mR/hr, THEN record "<0.5 mR/hr" for one-meter (3.3 feet) package readings.

B. IF contact radiation dose rates are greater than (>) 0.5 mR/hr, THEN perform a radiation dose rate survey on each package at one meter (3.3 feet).

6.2.7 IF radiological survey results exceed limits as specified in Attachments D OR E, THEN contact Radiological Compliance for further guidance.

6.2.8 Go to Section 6.6.

6.3 Survey Incoming Empty Conveyances

6.3.1 Observe these restrictions on *incoming empty* conveyances:

A. IF an incoming empty conveyances is received during normal working hours, THEN survey within 3 hours of receipt.

B. IF an incoming empty conveyance is received after normal working hours, THEN survey as soon as possible, but no later than 3 hours after the beginning of the next working day.

6.3.2 Survey incoming empty conveyances prior to them entering the Controlled Area.

6.3.3 Using a beta-gamma pancake probe, perform a direct survey according to RC-RDA-010, Routine Radiological Contamination Surveys for contamination where radioactive material packages may have come into contact with the surface of the conveyance. IF any Beta-Gamma fixed plus removable contamination survey result is greater than or equal to (≥) 5000 dpm/100cm^2, THEN go to Step 6.3.4.C.

6.3.4 Swipe areas of the conveyance according to RC-RDA-010, Radiological Contamination Surveys, where radioactive material packages may have come into contact with the surface of the conveyance.

A. Analyze the swipes for both alpha and beta/gamma contamination according to RC-RDA-010, Radiological Contamination Surveys and/or SP-P-35-046, Counting Smears with Field Survey Instruments.

B. IF removable contamination survey results are ≥ 200 dpm/100cm^2 (alpha) or ≥ 1000 dpm/100cm^2 (beta-gamma), THEN go to Step 6.3.4.C.

C. Step to follow if contamination is detected:

1. Perform a contact radiation dose rate survey according to RC-RDA-009, Radiation Surveys, on the contaminated surface.

2. Perform a radiation dose rate survey at one meter (3.3 feet) from the contaminated surface.

3. Contact Radiological Compliance for further guidance.

6.3.5 Go to Section 6.6.

6.4 Survey Incoming Loaded Conveyances

6.4.1 Observe these restrictions on *incoming loaded* conveyances:

NOTE: A survey of an incoming loaded conveyance is only required for exclusive use conveyances and DOE conveyances. A survey of non-exclusive conveyances is only required if the conveyance is entering the controlled area of the FEMP.

A. IF an incoming loaded conveyances is received during normal working hours, THEN survey within 3 hours of receipt.

B. IF an incoming loaded conveyance is received after normal working hours, THEN survey as soon as possible, but no later than 3 hours after the beginning of the next working day.

C. IF the loading configuration of incoming loaded conveyance prohibits individual package surveys upon receipt, THEN

1. The package surveys may be delayed until shipment is unloaded.

2. While unloading, survey the package(s) according to Step 6.2.3 through step 6.2.8.

3. After unloading, perform a contamination swipe survey of the area on which the load was stacked.

6.4.2 Move the conveyance away from other sources of ionizing radiation to minimize error.

NOTE: Railroad cars may be coupled together when performing radiation surveys.

6.4.3 Perform a contact radiation dose rate survey according to RC-RDA-009, Radiation Surveys as follows:

A. On the exterior surface of enclosed conveyance.

B. For flatbed trailer, measure any points on the vertical plane projected from the outer edges of flatbed trailer.

6.4.4 IF contact radiation dose rates are <2 mR/hr, THEN go to Step 6.4.6.

6.4.5 **IF** contact radiation dose rates are ≥2 mR/hr, **THEN:**

A. Perform a radiation dose rate survey as follows:

1. At 2 meters (6.6 feet) from the exterior surface of enclosed conveyance.

2. For flatbed trailer, measure any points 2 meters (6.6 feet) on the vertical plane projected from the outer edges of the vehicle (excluding the top and underside of the vehicle).

B. Perform a radiation dose rate survey in the occupied space of the conveyance.

C. **IF** radiation dose rates exceed the maximum allowable levels given in Attachment D, **THEN:**

1. Do NOT allow conveyance to be moved.

2. Establish radiological controls to keep personnel exposure as low as reasonably achievable.

3. Immediately contact Radiological Compliance for further guidance.

6.4.6 Perform a contamination swipe survey according to RC-RDA-010, Contamination Surveys, in these locations:

A. Closed Van Trailers - Swipe the floor and shoring of the trailer behind the last packages and the apron (metal floor area under and exterior to the rear door) of the trailer.

B. Open Top Trailer - Swipe any surfaces which may have been contaminated. This should include, as a minimum, accessible areas in front of and behind the load.

C. Flatbed Trailers - Swipe accessible bed areas.

D. Box Cars - Swipe accessible areas of floor, shoring and apron(s) before door(s) are closed.

E. Gondolas - Swipe accessible areas which may have become contaminated. (Container surfaces may be smeared at surveyor's option.)

F. Flatcars - Swipe accessible areas of flatcar floor.

6.4.7 Analyze the swipes for both alpha and beta/gamma contamination according to RC-RDA-010, Radiological Contamination Surveys and SP-P-35-046, Counting Smears with Field Survey Instruments.

6.4.8 Go to Section 6.6.

6.5 Surveys of Outgoing Loaded Conveyances

6.5.1 After loading, perform a contamination swipe survey on the conveyance according to Step 6.4.6 and Step 6.4.7.

6.5.2 After the conveyance is loaded, perform radiation dose rate surveys according to Step 6.4.2 through Step 6.4.5.

6.5.3 IF all contact radiation dose rates of a conveyance are <2 mR/hr, THEN survey of the occupied space is NOT required.

6.5.4 IF any contact radiation dose rates of a conveyance is ≥2 mR/hr, THEN notify the Traffic department that a dose rate survey of the occupied space of the conveyance will be required.

6.5.5 Perform a dose rate survey of the occupied space of the conveyance prior to the conveyance leaving site.

NOTE: IF radiation dose rate survey results are ≥2 mR/hr inside the occupied space of the transport, THEN contact Radiological Compliance for guidance.

6.5.5 Document results as described in Section 6.6.

6.6 Documentation

6.6.1 Record all survey results on a Radiological Survey Report (see Attachment A and B, Radiological Survey Report and Continuation Sheet, FS-F-1993-1 and FS-F-1993-2) as outlined in RC-RDA-010, Routine Contamination Surveys and RC-RDA-009, Routine Radiation Surveys.

6.6.2 For incoming and outgoing van trailers and flat beds:

A. As applicable, fill out a Conveyance Survey Confirmation, Attachment F, and give to the driver, Radiological Control Technician or Security Inspector at the security post at which the vehicle will enter.

B. Record results on a Vehicle Radiation Monitoring Report, (see Attachment C, Vehicle Radiation Monitoring Report FS-IRS&T-1596-1).

C. Attach a radiological security seal to the door lock(s) of van trailers.

D. Record radiological security seal number on Attachment C.

6.6.3 Using FAX or Hand Delivery, distribute copies of all survey records to:

A. Traffic Control
B. Quality Assurance

6.7.2 Send the original copy of all survey records to Records Management.

7.0 RECORDS

7.1 FS-F-1993-1, Radiological Survey Report

7.2 FS-F-1993-2, Radiological Survey Report (Continuation Sheet)

7.3 FS-IRS&T-1596-1, Vehicle Radiation Monitoring Report

8.0 ATTACHMENTS

8.1 Attachment A, Radiological Survey Report

8.2 Attachment B, Radiological Survey Report (Continuation sheet)

8.3 Attachment C, Vehicle Radiation Monitoring Report

8.4 Attachment D, FEMP Maximum Allowable Contamination and Radiation Levels

8.5 Attachment E, Contamination Limits for Specific Nuclides (DOE 5480.11)

8.6 Attachment F, Conveyance Survey Confirmation

ATTACHMENT A

RADIOLOGICAL SURVEY REPORT
(FS-F-1993-1)

ATTACHMENT B

RADIOLOGICAL SURVEY REPORT (CONTINUATION SHEET)
(FS-F-1993-2)

ATTACHMENT C

VEHICLE RADIATION MONITORING REPORT
(FS-IRS&T-1596-1)

ATTACHMENT D

FEMP MAXIMUM ALLOWABLE CONTAMINATION AND RADIATION LEVELS

SHIPPING CONTROLS	• REMOVABLE CONTAMINATION LEVELS (dpm/100cm²)	RADIATION LEVELS (mrem/hr)
EXCLUSIVE USE - Empty CONVEYANCE	ALL SURFACES <1,000 alpha,• <1,000 beta,• Empty - Not stenciled "Radioactive Materials Use Only" <5000 alpha or beta direct survey inside)•	Empty - Stenciled "Radioactive Materials Use Only": (Interior Surface-10), (Interior One meter-2). Empty - Not stenciled "Radioactive Materials Use Only" and Exclusive Use:-(Interior Surface-0.5).
EXCLUSIVE USE - Loaded CONVEYANCE Closed Transport Vehicle	All Surfaces: <1,000 alpha•, <1,000 beta•	Fixed position package: (Surface-1000), (Outer Surface of Transport-200), (Two meters-10), (any normally occupied space-2)
EXCLUSIVE USE - Loaded CONVEYANCE Open Transport Vehicle: Flatbed trailers, Packages, and Sea/lands containers	All Surfaces: <1,000 alpha•, <1,000 beta•	Flatbed-Vertical plane from edge of bed: (Surface-200), (Two meter-10), (Cab - 2). Packages, Sea/land containers: (Surface-200)
Non-Exclusive Use - Conveyance	All Surfaces: <1,000 alpha•, <1,000 beta•, <5,000 alpha or beta direct survey•	Empty: (Not detectable above background).
Non-Exclusive Use - Package	All Surfaces: <1,000 alpha•, <1,000 beta•	(Surface-200••), (One meter-10••).

• These contamination limits apply to uranium contamination only. For nuclides other than uranium, apply the limits of Attachment E for the specific nuclide.

•• Limited Quantity class package limit is 0.5 mR/hr (Surface).

ATTACHMENT E

CONTAMINATION LIMITS FOR SPECIFIC NUCLIDES

(From DOE Order 5480.11)

NUCLIDE (See Note 1)	REMOVABLE (dpm/100 cm^2) (See Note 2)
U-natural, U-235, U-238 and associated decay products	1,000 alpha
Transuranics, Ra-226, Ra-228, Th-230, Th-228, Pa-231, Ac-227, I-125, I-129	20
Th-natural, Th-232, Sr-90, Ra-223, Ra-224, U-232, I-126, I-131, I-133	200
Beta-gamma emitters (nuclides with decay modes other than alpha emission or spontaneous fission) except Sr-90 and others noted above. Includes mixed fission products containing Sr-90.	1,000 beta-gamma
Tritium organic compounds, surfaces contaminated by HT, HTO and metal tritide aerosols	10,000

Notes:

1. The values in this attachment apply to radioactive contamination deposited on, but not incorporated into, the interior of the contaminated item. Where contamination by both alpha- and beta-gamma-emitting nuclides exists, the limits established for the alpha- and beta-gamma-emitting nuclides apply independently.

2. The amount of removable radioactive material per 100 cm^2 of surface area should be determined by swiping the area with dry filter or soft absorbent paper while applying moderate pressure and then assessing the amount of radioactive material on the swipe with an appropriate instrument of known efficiency. For objects with a surface area less than 100 cm^2, the entire surface should be swiped, and the activity per unit area should be based on the actual surface area. Except for transuranics, Ra-228, Ac-227, Th-228, Th-230, Pa-231 and alpha emitters, it is not necessary to use swiping techniques to measure removable contamination levels if direct scan surveys indicate that the total residual contamination levels are below the values for removable contamination.

ATTACHMENT F

CONVEYANCE SURVEY CONFIRMATION

CONVEYANCE SURVEY CONFIRMATION

DATE:_____ TIME:_____

Vehicle Status:

☐ Incoming Empty ☐ Incoming Loaded

☐ Outgoing Empty ☐ Outgoing Loaded

TRAILER ID NUMBER:_____

THIS CONVEYANCE HAS BEEN RADIOLOGICALLY SURVEYED IN ACCORDANCE WITH ES&H SAFETY PROCEDURE RC-RDA-006. QUESTIONS SHOULD BE DIRECTED TO RADCON SHIPPING AT EXT. 6131,

RCT SIGNATURE/BADGE#_____

FS-F-3966 (08/11/94)

FERNALD ENVIRONMENTAL RESTORATION MANAGEMENT CORPORATION		DOCUMENT NUMBER: QP-12.04
QUALITY ASSURANCE PROCEDURE	SUBJECT: CERTIFICATION OF L-LRW PACKAGES, PRE-LOAD INSPECTION THROUGH LOADED TRANSPORT VEHICLE INSPECTION, FOR SHIPMENT TO THE NEVADA TEST SITE	REVISION: 2
		Page 1 of 54
	AUTHORIZED: (VP, Performance/Quality Assurance) Richard L. Klein	Effective Date: 05/08/95

NON-CONTROLLED COPY

1.0 SCOPE

This procedure establishes a detailed method for the certification of Low-Level Radioactive Waste (L-LRW) packages, from the sealing of filled containers through loading onto the transport vehicle for shipment to the Nevada Test Site (NTS). This procedure ensures compliance with all applicable federal regulations.

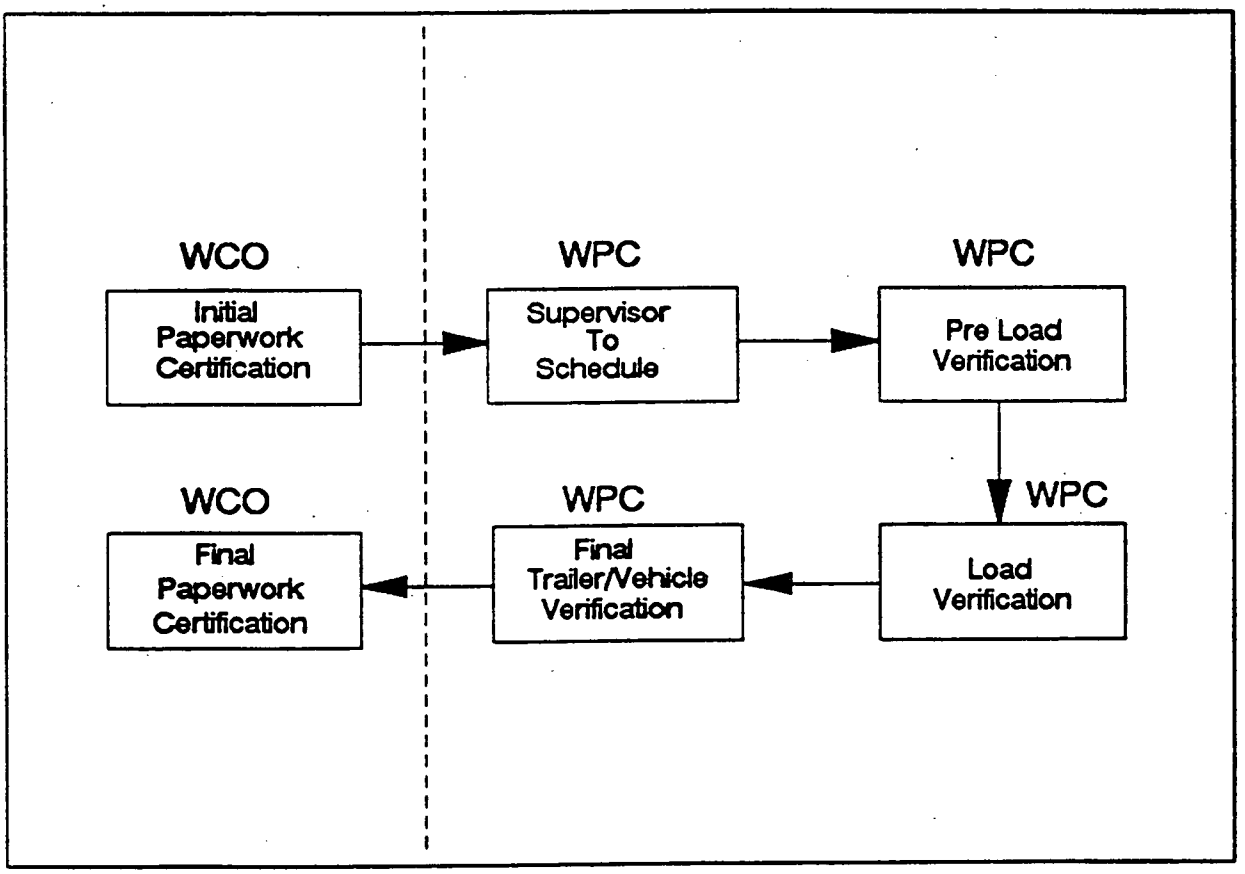

2.0 PROCEDURE

2.1 Industrial Health and Safety Requirements

2.1.1 At a minimum, safety glasses with side shields and leather safety shoes which cover the complete foot are to be worn by all personnel at all times while in the process area of the Fernald Environmental Management Project (FEMP).

2.1.2 Determination of requirements for proper safety equipment to be utilized by each employee working with waste material is made in accordance with the specific project work plan (WP), the FEMP-2128, "FEMP Industrial Hygiene and Safety Manual" and DOE/EH-0256T, "Department of Energy (DOE) Radiological Control Manual."

2.1.3 Supervisors and managers are responsible for making required safety equipment available to all workers within their area of responsibility and seeing that it is being used in accordance with the Safety & Health (ES&H) procedure ESH-1-1000, "Comprehensive Environmental, Occupational Safety and Health Program."

2.2 Event Notification and Reporting Requirements

2.2.1 Any circumstances of event which could have resulted in an intake of radioactive materials shall immediately be reported to supervision. In the Supervisor's absence the Assistant Emergency Duty Officer is to be notified in accordance with ED-0001, "Event Notification and Reporting."

2.2.2 Any personnel involved in a spill incident must report to Medical Services before the end of their shift on the day of the event to submit a urine sample and again at the start of their shift the next scheduled work day.

2.2.3 Spill incidents involving Resources Conservation and Recovery Act (RCRA) materials must be reported to the Spill Reporting Advisor in Environmental Compliance according to Site Operating Procedure (SOP) FEMP-503, "FEMP Spill Incident Reporting and Cleanup."

2.3 Responsibilities

2.3.1 Manager of Waste Programs Quality Assurance (QA)/Chief Waste Certification Official (CWCO) - Responsible for managing the activities of both the WCOs and the WPCs in such a way as to maintain independence from those who have direct responsibility for performing waste generation activities and to maintain compliance with the NTS and NVO-325. CWCO responsibilities include:

- Signing the Fernald Environmental Restoration Management Corporation (FERMCO) application signature page certifying that the information is correct and that the waste stream(s) will meet the NTS Waste Acceptance Criteria (WAC) upon implementation of the Waste Certification Program Plan (WCPP);

- Ensuring certification procedures are prepared and used for waste certification activities;

- Ensuring the performance of internal audits, inspections, surveillance and overviews;

- Ensuring timely identification of deficiencies and effective corrective action; and is also

- Responsible for assuring that alternate WCOs and WPCs are properly trained and qualified to the requirement of NTS Defense WAC as discussed in NVO-325.

2.3.2 Alternate Waste Certification Official (WCO) - Responsible for assuring that all waste packages, data and waste shipments comply with NVO-325.

2.3.3 Waste Package Certification (WPC) Supervisor - Responsible for directing the activities of the WPCs in assuring all applicable inspections are conducted and all data (checklists, etc...) is compiled to assist the WCO in the certification process.

2.3.4 Waste Package Certifier - Responsible for performing all activities specified in this procedure to assure all packages produced by Waste Programs adhere to their most current procedures, and therefore, meet the requirements of NVO-325.

2.3.5 Waste Programs Management (WPM) - Responsible for providing documentation, preparing waste packages, performing waste generation activities and conducting waste management programs in accordance with all applicable requirements as referenced in NVO-325 and the WCPP.

2.4 Training Requirements

2.4.1 All Waste Package Certifiers and Waste Certification Officials who verify packaging for use in shipment of L-LRW to the NTS must be qualified, trained and certified in the following:

a. RM-0012, "Quality Assurance Program."

b. NVO-325, "Nevada Test Site Defense Waste Acceptance Criteria, Certification and Transfer Requirements."

c. The "Waste Certification Program Plan" in accordance with Procedure QP-6.04, "Qualification of Waste Package Certifiers" for WPCs or in QP-6.05, "Qualification of Waste Certification Officials" for WCOs.

d. Card 65-1, "Item Production / Certification / Identification" training.

e. QA procedure QP-12.03, "Certification of Waste Containers and Filling With L-LRW for Shipment to the NTS."

f. QA procedure QP-12.04, "Certification of L-LRW Packages, Pre-Load Inspection Through Loaded Transport Vehicle Inspection, for Shipment to the NTS".

g. QA procedure QP-12.07, "Certification of Supporting Paperwork for Shipment of L-LRW to the NTS."

2.5 General Requirements for Verifying Packaging and Loading L-LRW Waste

2.5.1 **Only** materials approved by the NTS, Waste Characterization, and Waste Management will be shipped. It is the responsibility of the CWCO to make pertinent information pertaining to approved materials available to all WPCs and WCOs.

2.5.2 WCOs may perform activities assigned to WPCs by authority of NVO-325.

2.5.3 Materials prohibited by NVO-325 and listed on the "Prohibited Materials List" (Attachment A) must be isolated and not packaged for shipment to the NTS.

2.5.4 Beta/Gamma radiation levels must not exceed 200 millirem/hour measured externally at the surface of the package.

Note: 200 millirem/hour may be increased to 1000 millirem/hour if conditions for exclusive use closed transport are met as specified in Title 49 CFR 173.441 (1) (i-iii).

2.5.5 Second radiation readings are to be taken or calculated externally at one (1) meter from the surface of the package in accordance with 49 CFR 173.331 and S&H procedure RC-RDA-006, "Radiological Survey Requirements for Radioactive Material Shipping and Receiving."

2.5.6 **Only** exclusive use closed transport will be used to ship L-LRW to the NTS.

2.5.7 Material that is a respirable fine, (able to be ingested through inhaling) is to always be packaged in double containment. Double containment constitutes either overpacking in larger containers or packaging in a drum with 6 mil or greater sealed liner. It is not permissible for either containment to leak in normal handling and transport.

2.5.8 Contents of a container may be viewed with the aid of a boroscope, when concern is raised about materials packaged inside.

2.5.9 Contents of a sealed container may be viewed through Real-Time Radioscopy (RTR) when concern is raised about what materials may be in the container and not visible.

2.5.10 Changes made to entries on the checklists used by the WPC or WCO during the course of operations covered by this procedure shall be lined out and the new entry initialed and dated.

2.5.11 Checklists generated for surveillance, overview and routine activities are controlled documents and are to be forwarded to the WCO for review and use in certification.

2.6 Documentation of Deficiencies

If during any phase of the verification and certification processes, the WPC or WCO observes a deficiency to this procedure it is to be documented using the following guidelines:

2.6.1 Any deficiency observed should be documented on the appropriate checklist by the WPC or WCO.

2.6.2 A deficiency of a minor nature that can be corrected promptly and does not require an evaluation may be handled by notifying a Waste Technician for the correction to be made. The correction is to be documented on the checklist. (e.g., loose bolts, missing washers, loose tags, etc.)

2.6.3 A deficiency of a nature that cannot be corrected promptly or requiring additional evaluation is to be documented in accordance with SSOP-0023, "Deviation and Corrective Action Report Processing" by the WPC or WCO. A "hold tag" (Attachment B) should be attached to the item of concern. (e.g. container)

2.6.4 A container with a "hold tag" should be segregated from other containers ready for shipment. The tag is to be removed only after the correction is made and the DR closed out by the originator or a designee. All hold tags must be removed before the NV-211 label is applied.

2.6.5 Disposal of any rejected containers, lids or accessories are the responsibility of WO or the generator of the package.

2.7 General Requirements for Approved Container Designs

It is the responsibility of the CWCO to determine if a container meets all the criteria for shipment of L-LRW to the NTS. The following rules apply to containers in general, items specific to each container design will be addressed later in this procedure:

2.7.1 **Only** container designs approved for shipment by the NTS as stated in NVO-325 and Title 49 CFR 173 are to be considered for packaging L-LRW.

2.7.2 Packaging will be done in strong tight containers that do not leak under normal transport and handling conditions, and which meet the criteria of Title 49 CFR 173.431 and 173.425.

2.7.3 Containers must not show signs of free liquids present at any stage in the process of packaging and no free liquids emitting from the packages at loading as defined by the "Leaker Inspection Types" table (Attachment C) located in PT-0079, "Packaging L-LRW in Metal Boxes for Shipment to the NTS."

2.7.4 Packages must be free of holes and significant deformations. A "significant deformation" is characterized as a dent or bulge in the surface area of the container that could result in leakage of radioactive material under conditions normally incident to transportation.

Dents or bulges that exhibit the following characteristics are examples of significant deformations:

a. a sharp crease;
b. a possible crack;
c. evidence of wear to the metal; or a
d. dent or bulge located on a seam or corner edge.

2.7.5 Packages shall be free of rust causing exfoliation (scale), severe pitting, or other conditions having a detrimental effect on the serviceability of the waste container or which could flake off during transport as defined by the "Corrosion Inspection Types" table (Attachment D) located in PT-0079.

2.7.6 TL WMBs and Sea/Land containers with flaking paint will be repaired to prevent flaking paint from blowing off during transit to the NTS.

2.7.7 All wooden boxes or WMB type containers with locking pin closure are to be overpacked in Sea/Land containers for shipment.

2.7.8 Drum and WMB type packages which are certified and held for shipment must be secure and protected from weather and other adverse conditions having the potential to create an unacceptable condition. Covered or enclosed storage, which may include covering with plastic or a tarpaulin are considered appropriate protective measures. If appropriate measures have not been taken, all packages concerned must be reexamined and recertified on the basis of the new results.

2.7.9 Maximum gross weights, not to be exceeded, for the most frequent used containers are as follows:

a.	48 or 55 gallon drum	1200 lbs.
b.	85 gallon drum	1000 lbs.
c.	85 gallon overpack drum	1200 lbs.
d.	Lock Pin 4x4x7 White Metal Box (WMB)	6000 lbs.
e.	Electro●Panel 4x4x7 WMB	*8000 lbs.
f.	Nominal 4x4x7 WMB	8000 lbs.
g.	8x8x20 TopLoad WMB (TL WMB)	**42000 lbs.
h.	8x8x20 Sea/Land container	**42000 lbs.

***Note:** E. has been reevaluated to hold 8000 lbs.

****Note:** A waiver on the 42000 lbs. must be approved in writing by the manager of Traffic division of Inventory Control & Traffic and a WCO. A copy of the letter will be attached to the Pre-Load checklist when the paperwork is prepared in accordance QA procedure QP-12.07.

2.8 General Marking and Labeling Requirements

The following general marking and labeling requirements are those which apply to all approved types of containers in accordance with Title 49 CFR 172, Subparts D & E, information which is specific to each container type will appear later in this procedure when each is discussed. General requirements include:

2.8.1 Exterior areas of a package prepared for shipment are to be free of inaccurate, misleading, or unsightly markings which do not pertain to the contents.

2.8.2 Each acceptable package must have a "Bar Code" label (Attachment E) securely affixed. The specific number of labels per package is determined by the container type and is addressed later in this procedure when each is discussed in detail. The print size of this label is to be 1/2" minimum. This label is to contain the following information:

a. **Shipment Number**, this number must always include the WML prefix (e.g. WML94012);

b. **Package Number**, this six digit number is the container serial number. If the number is less than six digits, zeros will be placed in front of the number (e.g. 001234);

c. **Waste Stream Number**, a thirteen digit (4 alpha followed by 9 numeric)(e.g. ONL0000000006);

d. **Gross Weight** listed in pounds and kilograms;

e. **Tare Weight** + packaging preparation weight (TL WMB & Sea/Land only) listed in pounds and kilograms; and the

f. **FEMP Inventory Number**.

2.8.3 Each acceptable package must have the proper radioactive marking (Attachment F) depending on the dose rate detected by the Radiological Control Technician's (RCT) survey. Limits for each level are as follows:

a. **Limited Quantity** (LQ), if the surface dose rate is equal to or less than 0.5 millirem/hour and the U-235 content is less than or equal to 15 grams;

b. **Low Specific Activity** (LSA), if the surface dose rate exceeds 0.5 millirem/hour or the U-235 content exceeds 15 grams;

c. **Reportable Quantity** (RQ), if the package contains ≤ the listed limits for the following Radionuclides in accordance with 49 CFR 172.101:

Thorium-228	.01	curie
Thorium-229	.001	curie
Thorium-230	.01	curie
Thorium-231	100.	curies
Thorium-232	.01	curie
Uranium	.1	curie

2.8.4 Other markings and labels may be required for specific materials packaged for shipment. (e.g. asbestos)

Note: **RQ should be stenciled next to the label when the quantity of asbestos meets EPA and CFR 49 reportable quantity limits.**

2.8.5 A waterproof NV-211 label (Attachment G) is to be applied by the WPC or WCO performing the verification work when, **and only when**, the package meets all the criteria required for shipment to the NTS. The steps to correctly affixing this label are as follows:

a. Blank labels are stored in a locked cabinet in the WPC supervisor's office expect when unlocked to remove labels for use;

b. One (1) label for each package in the shipment is removed from the cabinet and the following information is logged in the "Chain-of-Custody NV-211 Log" (Attachment H):

1. Shipment Number;
2. Issue Date;
3. Number of Labels Issued; and
4. Signature of WPG or WCO verifying the Shipment.

c. The verifier legibly signs and dates each NV-211 using a black permanent marker in the presents of the WPC's supervisor or designee.

d. The verifier applies the NV-211 label to the package in a group pattern with other labels and markings **only** after it has been satisfactorily verified and accepted for shipment.

Note: **If the NV-211 labels have been applied and the shipment is not loaded within 48 hours, the labels shall be removed and the packages reexamined before new labels are applied.**

2.9 Verification of Packages at Pre-Loading

2.9.1 **Metal Drums**

Examination of filled drums which are staged and ready for loading is to be performed 100% by a WPC or WCO and the results of the examination are to be documented on checklist QP-920529-1 (Rev. 4), "QUALITY L-LRW PRE-LOADING PACKAGE INSPECTION FOR DRUMS." (Attachment I) Examine all surfaces of the drum with its lid and reject if all of the following conditions are not met:

a. Verify the two (2) Bar Code labels are securely attached (one to the lid and one to the side of the drum) in accordance with SOP 01-C-602, "L-LRW Shipment Preparation";

b. Verify the information on all the Bar Code labels match the shipment paperwork;

c. Verify Radiological Survey reports (initial smears) have been completed for all drums in the shipment;

d. Verify that one (1) Radioactive marking (one on lid) is securely affixed;

e. Verify that all erroneous marking have been removed or covered; (e.g. inaccurate, misleading information)

f. Verify there are no significant deformations or any of the following conditions present in the drum:

1. A dent or bulge in the bottom rim;

2. A dent or bulge in a rolling hoop;

3. Any out-of-round condition affecting the sealing surface; and

4. Scaling rust or severe pitting.

g. Verify the lid is fully seated with bolt type ring. The lip of the ring must be well down over the chime and fully contained by the bolt ring;

h. Verify there is a dot of red paint on the bolt head of each drum indicating the generator has torqued the bolt to 45 (±5) ft.-lbs. using a torque wrench. Conduct a spot check of 10% of lot to verify bolts are torqued to 45 (±5) ft.-lbs;

i. Verify there is a twisted wire seal threaded through the hole in the bolt head, around the threaded portion of the bolt ring and fastened as shown in the "Bolt Diagram". (Attachment J) Check that jam nut is locked to opposite side of bolt head;

j. Verify drum has been lifted to head height and the bottom has been checked for all of the following conditions:

1. The bottom is free of adhering or entrapped soil or debris;

2. There are no holes in bottom;

3. There is no free liquid on, or emitting from bottom; and

4. There is no scaling rust or severe pitting.

k. Place one (1) Tamper Indicating Device (TID) around both flanges and behind the bolt closure mechanism and securely tighten.

2.9.2 4x4x7 White Metal Box

Examination of filled WMBs which are staged and ready for loading is to be performed 100% by a WPC or WCO and the results of the examination are to be documented on checklist QP-881115-1 (Rev. 10), "QUALITY L-LRW PRE-LOADING PACKAGE INSPECTION FOR WHITE METAL BOXES (4X4X7)." (Attachment K) Examine all surfaces of the WMB with lid and reject if all the following conditions are not met:

a. Verify the three (3) Bar Code labels are securely attached (one on each of the two long sides and one on lid of the WMB) in accordance with SOP 01-C-602;

b. Verify the information on the Bar Code labels match the shipment paperwork;

c. Verify Radiological Survey reports have been completed for all WMBs in shipment;

d. Verify that one (1) Radioactive marking (one on lid) is securely affixed;

e. Verify that all erroneous marking have been removed or covered (e.g. inaccurate, misleading information);

f. Verify there are no significate deformations;

g. Verify there is no scaling rust or severe pitting;

h. Verify one (1) vent plug is in place and secure;

i. Verify that a foam rubber or similar type gasket is on the sealing surface of the lid, or the lid is sealed with a durable sealant;

j. Verify the lid of the WMB is secured with twenty-six (26) bolts, nuts and the proper number of washers;

1. WMBs manufactured by **Galbreath Inc.** with no protruding flanges require washers on both top and bottom of flange. (Attachment L)

2. WMBs manufactured by **Carolina Container** with protruding flanges require washers only on the top of the flange. (Attachment M)

3. WMBs manufactured by **Container Products** with protruding flanges require washers on both top and bottom of flange. (Attachment N)

4. WMBs manufactured by **Electro●Panel** with a retainer ring over the lid requires fourteen (14) hasps with two (2) bolts each. (Attachment O)

k. Verify WMB has been lifted to head height, set on the WMB stand and the bottom checked for all of the following conditions:

1. The bottom is free of adhering or entrapped soil or debris;

2. There are no holes in bottom;

3. There is no free liquid on or emitting from the WMB;

4. There is no scaling rust or severe pitting.

5. For all WMB designs having drain plugs, verify the bottom has been checked for a drain plug and if found, the drain plug has been tightened:

   a. A red dot stenciled in the lower left hand front of the WMB indicates that the plug has been tightened; and

   b. A black dot stenciled in the lower left hand front of the WMB indicates that there is no drain plug.

6. Verify two (2) holes are drilled in all closed type runners. (WMBs manufactured by **Container Products** or **Electro●Panel** have this type of runner) A black check mark stenciled in the lower right hand corner of the WMB indicates the runners have been drilled.

1. Place two (2) TIDs on each WMB. One (1) in the center hole on each side flange and tighten securely.

2.9.3 **8x8x20 Top Load WMB**

Examination of filled TL WMBs which are staged and ready for loading is to be performed 100% by a WPC or WCO and the results of the examination are to be documented on checklist QP-880930-1 (Rev. 5), "QUALITY L-LRW PRE-LOADING PACKAGE INSPECTION FOR SEALANDS/TL WMBS." (Attachment P) Examine all surfaces of the box and lid and reject if all of the following conditions are not met:

a. Verify that three (3) Bar Code labels are securely attached (one on each of the two long sides and one on the end of the TL WMB) in accordance with SOP 01-C-602;

b. Verify the information on the Bar Code labels match the shipment paperwork;

c. Verify Radiological Survey reports have been completed for all TL WMBs in shipment;

d. Verify that two (2) Radioactive markings (one on each of the two long sides) are securely affixed;

e. Verify there are four (4) Radioactive placards (Attachment Q) securely affixed; (one on each of the four sides of the TL WMB)

f. Verify that all erroneous marking have been removed or covered;

g. Verify there are no significant deformations;

h. Verify there is no scaling rust or severe pitting;

i. Verify there is no flaking paint;

j. Verify the initial tare weight has been marked out on the TL WMB;

k. Verify that a foam rubber or similar type gasket is on the sealing surface of the lid, or the lid is sealed with a durable sealant;

l. Verify the lid of the TL WMB is secured with bolts, and the proper number of nuts and washers;

   1. WMBs manufactured by Galbreath Inc. with no protruding flanges require twenty-eight (28) 1/2 x 1 1/2 inch hex head screws and nuts with washers on both top and bottom of flange. (Attachment R)

   2. WMBs manufactured by Carolina Container with threaded holes in flange (no nuts) require twenty-eight (28) 1/2 x 1 inch hex head screw and one washer only on the top of the lid flange. (Attachment S)

m. Verify the TL WMB is setting on a concrete surface or is up on blocks; not setting directly in soil or loose gravel;

n. Verify there are two (2) DOT approved seals on the TL WMB. (one on each end of the lid)

2.9.4 **8x8x20 Sea/Land Container**

Examination of filled Sea/Land containers which are staged and ready for loading is to be performed 100% by a WPC or WCO and the results of the examination are to be documented on the "QUALITY L-LRW PRE-LOADING PACKAGE INSPECTION FOR SEALANDS/TL WMBS" (Attachment P) checklist. Examine all surfaces of the Sea/Land container and reject if any of the following conditions are not met:

a. Verify the three (3) Bar Code labels are securely attached (one on each of the two long sides and one on the door of the Sea/Land) in accordance with SOP 01-C-602.

b. Verify the information on the Bar Code labels match the shipment paperwork.

c. Verify Radiological Survey reports have been completed for the Sea/Land.

d. Verify that two (2) Radioactive markings (one on each of the two long sides) are securely affixed.

e. Verify there are four (4) Radioactive placards securely affixed. (one on each of the four sides of Sea/Land)

f. Verify that all erroneous marking have been removed or covered.

g. Verify there are no significant deformations.

h. Verify there is no scaling rust or severe pitting.

i. Verify there is no flaking paint.

j. Verify the initial tare weight is marked out on the Sea/Land.

k. Verify that all doors and around all sealing surfaces have been caulked with GE RTV silicone rubber adhesive sealant, or the equivalent.

l. Verify that the doors are banded with two (2) metal bands and clips.

m. Verify the Sea/Land is setting of a concrete surface or is up on blocks and not setting directly in soil or loose gravel.

2.10 Loading of Packages onto the Transport Vehicle

2.10.1 Metal Drums

Examination of filled and staged drums during the loading process is to be performed 100% by a WPC or WCO and the results of the examination are to be documented on checklist QP-880801-1 (Rev. 6), "QUALITY L-LRW TRAILER EXAMINATION AT LOADING." (ATTACHMENT T) Examine all surfaces of the drum while loading and reject if all of the following conditions are not met:

a. Verify all Radiological Surveys have been completed before loading begins and a RCT takes a verification smear of each drum as it is being loaded.

b. Verify a Preliminary Visual Trailer Inspection was completed for the empty trailer prior to having been unhooked from the tractor.

c. Verify each drum has a properly signed and dated NV-211 securely affixed.

d. Verify drums have sustained no damage in the form of holes and significant deformations during loading.

e. Verify there is no free liquid emitting from the drums.

f. Verify the bottom of each drum has been cleaned of loose rock and soil before loading.

g. Verify one (1) TID is in place and has not been tampered with.

h. Verify drums have been tied-down properly as specified by SOP-50-C-109, "Loading Low-Level Radioactive Waste Containers on Vans for Off-Site Shipment."

1. Drums are to be grouped together with one (1) band attached to the inside front panel of the trailer and clamped at the rear around the middle of all drums. One (1) 2x4 is nailed to the floor in back of the drums when the floor is wood.

Note: Drums may not be double stacked in trailer.

i. Two (2) photographs of the drums are to be taken (one at the half full point and again when fully loaded) prior to the doors being closed.

j. Verify the trailer envelope is affixed to the last package inside the trailer.

k. Verify the two (2) rear doors and any other door entries large enough to convey material into the loaded trailer are secured with the DOT approved seal and also the Radiological seal.

2.10.2 **4x4x7 White Metal Box**

Examination of filled and staged WMBs during the loading process is to be performed 100% by a WPC or WCO and the results of the examination are to be documented on checklist, "QUALITY L-LRW TRAILER EXAMINATION AT LOADING." (ATTACHMENT T) Examine all surfaces of the WMB while loading and reject if all of the following conditions are not met:

a. Verify all Radiological Surveys have been completed before loading begins and a RCT takes a verification smear of each WMB as it is being loaded.

b. Verify a Preliminary Visual Trailer Inspection was completed for the empty trailer prior to having been unhooked from the tractor.

c. Verify each WMB has a properly signed and dated NV-211 securely affixed.

d. Verify WMBs have sustained no damage in the form of holes and significant deformations during loading.

e. Verify there is no free liquid emitting from the WMBs.

f. Verify the bottom of each WMB has been cleaned of loose rock and soil before loading.

g. Verify two (2) TIDs are in place and WMBs have not been tampered with.

h. Verify WMBs have been tied-down properly as specified by SOP-50-C-109.

   1. WMBs are positioned in two (2) groups over the trailer axles. Two (2) bands are evenly spaced and attached to the floor under each group of WMBs and clamped on top. 2x4s are nailed to the floor of the trailer to form a containment around the runners of each group.

i. Verify the trailer envelope is affixed to the last WMB inside the trailer.

j. Two (2) photographs of the WMBs are to be taken (one at the half full point and again when fully loaded) prior to the doors being closed.

k. Verify the two (2) rear doors and any other door entries large enough to convey material into the loaded trailer are secured with the DOT approved seal and also the Radiological seal.

2.10.3 8x8x20 Top Load WMB

Examination of filled and staged TL WMBs during the loading process is to be performed 100% by a WPC or WCO and the results of the examination are to be documented on checklist, "QUALITY L-LRW TRAILER EXAMINATION A LOADING." (ATTACHMENT T) Examine all surfaces of the TL WMB while loading and reject if all of the following conditions are not met:

a. Verify all Radiological Surveys have been completed before loading begins and a RCT takes a verification smear of each TL WMB as it is being loaded.

b. Verify a Preliminary Visual Trailer Inspection was completed for the empty trailer prior to having been unhooked from the tractor.

c. Verify there are four (4) Radioactive placards securely affixed. (one on each of the four sides of TL WMB)

d. Verify each TL WMB has sustained no damage in the form of holes and significant deformations during loading.

e. Verify there is no free liquid emitting from the TL WMB.

f. Verify the bottom of each TL WMB has been cleaned of loose rock and soil before loading.

g. Verify TL WMB has been tied-down properly as specified by SOP-50-C-108 "Loading Low-Level Radioactive Waste Containers on Flatbeds for Off-Site Shipment."

   1. Each TL WMB is secured to the flatbed trailer with two (2) tie-down straps for on-site transport. Two (2) 2x4s are nailed into the bed of the trailer one at each the head and foot of the TL WMB tight against its runners.

h. Verify there are two (2) tamper proof DOT approved seals on the lid of the TL WMB. (one on each end of the lid)

i. Verify each TL WMB has a properly signed and dated NV-211 securely affixed before loading.

j. At a minimum, take one (1) photograph of the NV-211 label securely affixed to the container close enough to verify the label is signed and dated.

2.10.4 **8x8x20 Sea/Land Container**

Examination of filled and staged Sea/Lands during the loading process is to be performed 100% by a WPC or WCO and the results of the examination are to be documented on checklist, "QUALITY L-LRW TRAILER EXAMINATION AT LOADING." (ATTACHMENT T) Examine all surfaces of the Sea/Land while loading and reject if all of the following conditions are not met:

a. Verify all Radiological Surveys have been completed before loading begins and a RCT takes a verification smear of each Sea/Land as it is being loaded.

b. Verify a Preliminary Visual Trailer Inspection was completed for the empty trailer prior to having been unhooked from the tractor.

c. Verify there are four (4) Radioactive placards securely affixed. (one on each of the four sides of Sea/Land)

d. Verify each Sea/Land has sustained no damage in the form of holes and significant deformations during loading.

e. Verify there is no free liquid emitting from the Sea/Land.

f. Verify the bottom of each Sea/Land has been cleaned of loose rock and soil before loading.

g. Verify Sea/Land has been tied-down properly as specified by SOP-50-C-108.

   1. Each Sea/Land is secured to the flatbed trailer with two (2) tie-down straps for on-site transport. Two (2) 2x4s are nailed into the bed of the trailer one at each the head and foot of the Sea/Land tight against its runners.

h. Verify the two (2) doors are banded and secured with one (1) tamper proof DOT approved seal.

i. Verify each Sea/Land has a properly signed and dated NV-211 securely affixed before loading.

j. At a minimum, take one (1) photograph of the NV-211 label securely affixed to the container close enough to verify the label is signed and dated.

2.11 Final Trailer Examination

2.11.1 A WPC or WCO, with the assistance of the off-site driver, conducts a final examination of the trailer after loading and before the shipment leaves the FEMP in accordance with SOP 50-C-111, "Traffic Documentation for Shipment of Low-Level Radioactive Waste." Results of the examination are documented on checklist QP-880801 (Rev. 4), "QUALITY L-LRW FINAL TRAILER/VEHICLE EXAMINATION" (Attachment U) using the following guidelines:

a. Verify the presence of four (4) Radioactive placards securely affixed. (one on each of the four (4) sides of each package on a flatbed or all four (4) side of a van)

Note: A shipment containing limited quantity packages exclusively does not require these placards.

b. Verify the following are operational on the trailer before releasing shipment:

1. headlights;
2. turn signals;
3. brake lights;
4. horn;
5. windshield wipers; and
6. tires

c. Verify the trailer number matches the number recorded on the Bill of Lading, the "L-LRW Shipment checklist", and the "Off Site Loading Tie-Down Inspection-Vehicle Inspection" form.

d. Verify that the DOT approved seal number matches the seal number recorded on the Bill of Lading , the "L-LRW Shipment checklist", and the "Off Site Loading Tie-Down Inspection-Vehicle Inspection" form.

2.11.2 Upon completion of the visual inspection, the WPC is to take three (3) pictures of the trailer (one full rear view, and diagonal views from each of the front two (2) corners of the trailer) to assure all trailer markings, placards, NV-211, and DOT seal are in place before the shipment leaves the FEMP.

3.0 REFERENCES

3.1 DOE/EH-0256T, "DOE Radiological Control Manual"

3.2 ES&H-1-1000, "Comprehensive Environmental, Occupational Safety and Health Program"

3.3 ED-0001, "Event Notification and Reporting"

3.4 FEMP-2128, "FEMP Industrial Hygiene and Safety Manual"

3.5 NVO-325, Rev. 1, "Nevada Test Site Defense Waste Acceptance Criteria, Certification, and Transfer Requirements"

3.6 QP-6.04, "Qualification of Waste Package Certifiers"

3.7 QP-6.05, "Qualification of Waste Certification Officials"

3.8 QP-12.03, "Certification of Waste Containers and Filling With L-LRW for Shipment to the NTS"

3.9 QP-12.07, "Certification of Supporting Paperwork for Shipment of L-LRW to the NTS"

3.10 RC-RDA-006, "Radiological Survey Requirements for Radioactive Material Shipping and Receiving"

3.11 RM-0012, "Quality Assurance Program"

3.12 SOP-FEMP-503, "FEMP Spill Incident Reporting and Cleanup"

3.13 SOP 01-C-602, "L-LRW Shipment Preparation"

3.14 SOP 50-C-108, "Loading L-LRW Containers on Flatbeds for Off-Site Shipment"

3.15 SOP 50-C-109, "Loading L-LRW Containers on Vans for Off-Site Shipment"

3.16 SOP 50-C-111, "Traffic Documentation for Shipment of L-LRW"

3.17 SSOP-0023, "Deviation and Corrective Action Report Processing"

3.18 PT-0079, "Packaging L-LRW in Metal Boxes for Shipment to the NTS"

4.0 ATTACHMENTS

4.1	Attachment A	Prohibited Materials List
4.2	Attachment B	Hold Tag, FS-F-3761 (11/15/93)
4.3	Attachment C	Leaker Inspection Types (table)
4.4	Attachment D	Corrosion Inspection Types (table)
4.5	Attachment E	Bar Code Label
4.6	Attachment F	Radioactive Markings
4.7	Attachment G	NV-211 Packaging Certification Labels, FS-F-234 (Rev. 8/3/93)
4.8	Attachment H	Chain-of-Custody Log sheet
4.9	Attachment I	QUALITY L-LRW PRE-LOADING PACKAGE INSPECTION FOR DRUMS, QP-920529-1, Rev. 4 (5/10/94)
4.10	Attachment J	Bolt Diagram
4.11	Attachment K	QUALITY L-LRW PRE-LOADING PACKAGE INSPECTION FOR WHITE METAL BOXES (4x4x7), QP-881115-1, Rev. 10 (5/10/94)
4.12	Attachment L	Galbreath Incorporated 4x4x7 Bolt Schematic
4.13	Attachment M	Carolina Container 4x4x7 Bolt Schematic
4.14	Attachment N	Container Products 4x4x7 Bolt Schematic
4.15	Attachment O	Electro●Panel 4x4x7 Hasp and Bolt Schematic
4.16	Attachment P	QUALITY L-LRW PRE-LOADING PACKAGE INSPECTION FOR SEALANDS/TL WMBS, QP-880930-1, Rev. 5 (5/10/94)
4.17	Attachment Q	Radioactive Placard

4.18	Attachment R	Galbreath Incorporated 8x8x20 Bolt Schematic
4.19	Attachment S	Carolina Container 8x8x20 Bolt Schematic
4.20	Attachment T	QUALITY L-LRW TRAILER EXAMINATION AT LOADING, QP-880801-1, Rev. 6 (5/10/94)
4.21	Attachment U	QUALITY L-LRW FINAL TRAILER/VEHICLE EXAMINATION, QP-880801, Rev. 4 (5/10/94)

PROHIBITED MATERIALS LIST

PROHIBITED MATERIALS LIST

MATERIAL	LIMIT/EXPLANATION
Transuranics	Limit: <100 nanocuries/gram. Acceptability of waste stream determined during characterization.
Hazardous Waste	Limit: Per Title 40 CFR 261 and Ohio Administrative Code 3745-54. No corrosives (acids with pH ≤2 and caustic materials with Ph ≥12). No ignitables (e.g. metal powders). No reactive materials (metal fines, explosives). No toxic materials (e.g. pesticides, poisons, certain metals. No leachable listed metals (e.g. arsenic, barium, cadmium, chromium, lead, mercury, selenium, silver, and cyanide). Notes: Lead can be found in hammer heads, scale weights, flashing materials, and counter weights. Watch for barium as barium chloride salts or barium chloride contaminated materials. Only "Rayovac" dry cell batteries are acceptable (other batteries contain unacceptable quantities of metals such as cadmium, lead, & mercury). Mercury is frequently found in instruments, electrical switches (including thermostats), and fluorescent lamp tubes. Silver can be found in photographic developer fluids, solder, and electrical contacts. No solvents Some examples include WD-40, adhesives, liquid paints, paint thinners, paint removers, or materials contaminated with solvents (e.g. rags saturated with solvents). Note: If a strong smell of solvents is present, call Health & Safety for verification.

PROHIBITED MATERIALS LIST

Free Liquids	Limit: Except for entrapped or residual liquids in well drained containers (0.5% of total volume maximum), no liquids including any that might separate from the waste under ambient temperature and pressure conditions (e.g. ice, excessive evaporation and condensation). Condensation in plastic bags and waste packages shall be considered entrapped liquids. Individual trash bales which are wet shall be excluded from shipment. Slightly soggy bales that occasionally drip should be limited to 30% to prevent excessive condensation within the container.
Particulates	Limit: Wastes packaged in unlined metal drums or ISO containers must contain no more than 1% weight of <10-micrometer particles or 15% weight of <200-micrometer particles. Some examples of fine particulates are black oxide, orange oxide, green salt, sump cakes, milled magnesium fluoride, dust collector residues, floor and pad sweepings, and soils.
Compressed gases	Limit: Defined by Title 49, CFR 173.300. However, all containers designed for compression, shall be assumed to exceed limit unless valve mechanism is removed, or in the case of aerosol cans, the can has an obvious puncture. Some examples of compressed gas containers include LP gas containers, oxygen containers, and aerosol cans. Typical aerosol cans may have containing paint, adhesives, cleaning and deodorizing agents, and personal care items.
Stabilization	Limit: Waste minimization shall be attained to the extent practicable by size reduction and efficient packaging.
Etiologic Agents	Limit: None allowed. Pathogens, infectious wastes or other etiologic agents. Potential source of this prohibited waste would be from Medical. Example include band aids, tongue blades, syringes, cotton balls or other materials stained with blood or other body materials, and outdated pharamaceuticals.

PROHIBITED MATERIALS LIST

Note: Restroom sanitary waste from the process area is to be packaged in green plastic bags, monitored, and disposed of as clean trash if within acceptable contamination limits.

Chelating Agents:

Limit: No greater than 1% by weight.

Chelating or complexing agents. Chelating agents form coordination compounds by offering two or more chemical bonds (through ligands) to a central metal ion. The most common chelating agent is EDTA. Other common chelating agents are aminopolyacteic acids. Excess chemicals from the on-site laboratory are the primary potential source. Wastes are to be evaluated for containment of chelating agents by Waste Characterization. Any exceeding the limit are identified on the MEF or RD/RC letter for exclusion from NTS shipments.

Polychlorinated Biphenyls

Limit: None allowed unless the concentration meets the municipal solid waste disposal limits. Reference 40 CFR 761.60.

Commonly called PCB's. Frequently found in capacitors and transformers. Light ballasts that are PCB free will be marked as such. Materials contaminated with PCBs may show signs of an oily residue. If PCB's are suspected, contact Waste Characterization.

Explosives and pyrophorics

Limit: None allowed.

Other than the commonly known explosives, laboratory hoods, bottles, and containers may contain small quantities of picric acid crystals which are highly explosive. Check labels on containers and RCRA evaluation results. Pyrophoric (self igniting) materials are commonly found in porous (spongy) uranium metals, and uranium fines such as fines from turnings and residue from grinding. Also prohibited are most all metal powders.

Note: This list was developed as an aid in identifying and recognizing prohibited materials. It is not to be used in lieu of NVO-325 waste acceptance criteria, or 40 CFR and 49 CFR requirements. Examples given are typical and are not intended to be all inclusive.

Attachment B
Page 1 of 1

HOLD TAG
FS-F-3761 (11/15/93)

HOLD
FOR QA/QC RELEASE

DO NOT REMOVE THIS TAG

TAG #: _____

FS-F-3761 (11/15/93)

HOLD FOR QA/QC RELEASE
DO NOT REMOVE THIS TAG

NAME:	BADGE NO.:
ISSUE DATE:	TELEPHONE NO.:

DESCRIPTION OF ITEM AND/OR ID NO.:

DESCRIPTION OF DEVIATION:

REPORT NO.:	TAG: of	DATE TAG REMOVED:

FS-F-3761 (11/15/93)

LEAKER INSPECTION TYPES

TABLE 2
LEAKER INSPECTION TYPES

TYPE	CHARACTERISTIC	CORRECTIVE ACTION
1	Material flowing from container and accumulation on, under or around container.	1. Notify supervisor and Radiological Control (RC). 2. Supervisor notify AEDO. 3. Stop or contain leak as directed by supervisor. 4. Record on inspection form that the container requires mitigation within 24 hours. 5. Complete additional cleanup as necessary. 6. Supervisor initiate an Occurrence Report (OR).
2	Material on container exterior only; no leakage of material on, under, or around container.	1. Record leak on inspection form. 2. Notify supervisor and RC. 3. Supervisor initiate an OR. 4. Supervisor review the completed inspection forms to prioritize containers for transfer to overpack staging area and subsequent mitigation.
3	Container exterior discolored/visible contamination; no material release.	1. Record condition on inspection form. 2. Notify supervisor and RC. 3. Supervisor schedule container for overpacking.

CORROSION INSPECTION TYPES

TABLE 1
CORROSION INSPECTION TYPES

TYPE	CHARACTERISTIC	COULD CAUSE LOSS OF BOX INTEGRITY		CORRECTIVE ACTION
		YES	NO	
1	Holes, large dents, or large areas of corrosion that affect the structural integrity of the container or require the entire side to be painted	X		1. Notify Maintenance to patch. Overpack or repackage in another container. NOTE: Supervisors ensure that touchup or painting is completed. 2. Notify QA and MC&A of all repairs or repackaging of waste containers.
2	Heavy rust with areas of pitted metal flaking (> 18 square inches - hand size) and no holes present		X	1. HAZWATS scrape loose oxides and paint the area to be repaired.
3	Light surface rust with no pitting of the base metal		X	1. Wipe with masoline cloth or wash with soap and water, if needed to remove dirt. 2. Ship as is.

BAR CODE LABEL

WML93414

PKG. # 157776

ONLO000000001

GR. WGT. 27960 LBS.(13610 KG.)

TARE WGT. 5151 LBS.(2345 KG.)

FEMP INV. NO. W125636

RADIOACTIVE MARKINGS

a.

RADIOACTIVE-LIMITED QUANTITY

UN-2910

FROM: FMPC

This package conforms to the conditions and limitations specified in 49 CFR 173.421 for excepted radioactive material, limited quantity, n.o.s., UN-2910.

b.

RADIOACTIVE-LSA

c.

RQ

NV-211 PACKAGING CERTIFICATION LABELS
FS-F-234 (REV. 8/3/93)

NV-211
1/27/89

PACKAGING CERTIFICATION

U.S. DOE

This certifies that this container and its contents are in acceptable condition for transportation and waste disposal according to DOT (49 CFR), EPA (40 CFR), and DOE/NV (NVO-325) requirements.

DATE: _____

CERTIFIED BY: _____

TITLE: CERTIFICATION OFFICIAL

ORGANIZATION: FEMP

FS-F-234 (REV. 8/3/93)

NV-211
1/27/89

PACKAGING CERTIFICATION

U.S. DOE

This certifies that this container and its contents are in acceptable condition for transportation and waste disposal according to DOT (49 CFR), EPA (40 CFR), and DOE/NV (NVO-325) requirements.

DATE: _____

CERTIFIED BY: _____

TITLE: PACKAGE CERTIFIER

ORGANIZATION: FEMP

FS-F-234-1 (REV. 8/3/93)

Attachment H
Page 1 of 1

CHAIN-OF-CUSTODY LOG SHEET

CHAIN-OF-CUSTODY LOG
FOR
ISSUE & RECEIPT OF SIGNED NV-211 LABELS

Date	Shipment Number	Labels Issued	Issued by (Signature)*	Number Received	Received by (Signature)	Labels Returned	Received by (Signature)

* - signature also verifies that the labels were signed in presence.

Attachment I
Page 1 of 4

QUALITY L-LRW PRE-LOADING PACKAGE INSPECTION FOR DRUMS
QP-920529-1, REV. 4 (5/10/94)

QUALITY L-LRW PRE-LOADING PACKAGE INSPECTION FOR DRUMS

SHIPMENT NUMBER: WML_____ NUMBER OF DRUMs _____

	Stamp or Initials
1. Verify that (2) Bar Code Labels are securely affixed. (one on the lid and the other on the side near the top of each drum) Print size is 1/2" minimum.	_____
2. Verify the Shipment Number, Pkg.# and Waste Stream# on the bar code labels match those on the signed PS&DD and the Gross Weight on the labels match the Circle Copy for each drum in the shipment.	_____
3. Verify the paperwork includes the correct Radiological Survey report (initial smears) for all drums in the shipment.	_____
4. Verify one (1) DOT approved Radioactive marking (LSA, LQ, or RQ) is securely affixed to the drum lids.	_____
5. Verify no erroneous markings present on drums.	_____
6. Verify no significant deformations present on the drums.	_____
7. Verify there is no out-on-round condition affecting the integrity of the sealing surface of the drums.	_____
8. Verify drums are free of scaling rust or sever pitting.	_____
9. Verify there are no free liquids on, or emitting from drums.	_____
10. Verify drums are free of adhering or entrapped soil or debris.	_____
11. Verify drum lids are fully seated and secured with bolt type ring. (Lip of drum ring must be well down over the chime and fully contained by the bolt ring.)	_____
12. A dot of red paint on the bolt head indicating the bolt was torqued to specification. Conduct a spot check of 10% of the bolts to verify.	_____
13. One wire seal has been placed around each bolt indicating it has not been tampered with.	_____

QUALITY L-LRW PRE-LOADING PACKAGE INSPECTION FOR DRUMS
QP-920529-1, REV. 4 (5/10/94)

INSPECTION RESULTS SUMMARY:

DRUM NUMBER	ACCEPTED	REJECTED	REWORK ACCEPTED	D.R. NO.	COMMENTS
000001					
000002					
000003					
000004					
000005					
000006					
000007					
000008					
000009					
000010					
000011					
000012					
000013					
000014					
000015					
000016					
000017					
000018					
000019					
000020					
000021					
000022					
000023					
000024					
000025					

QUALITY L-LRW PRE-LOADING PACKAGE INSPECTION FOR DRUMS
QP-920529-1, REV. 4 (5/10/94)

DRUM NUMBER	ACCEPTED	REJECTED	REWORK ACCEPTED	D.R. NO.	COMMENTS
000026					
000027					
000028					
000029					
000030					
000031					
000032					
000033					
000034					
000035					
000036					
000037					
000038					
000039					
000040					
000041					
000042					
000043					
000044					
000045					
000046					
000047					
000048					
000049					
000050					
000051					
000052					

QUALITY L-LRW PRE-LOADING PACKAGE INSPECTION FOR DRUMS
QP-920529-1, REV. 4 (5/10/94)

DRUM NUMBER	ACCEPTED	REJECTED	REWORK ACCEPTED	D.R. NO.	COMMENTS
000053					
000054					
000055					
000056					
000057					
000058					
000059					
000060					
000061					
000062					

Comments: _____

SECURELY TIGHTEN A TAMPER INDICATING DEVICE (TID) AROUND BOTH FLANGES AND BEHIND THE BOLT CLOSURE MECHANISM.

PLACE A SIGNED and DATED NV-211 LABEL ON EACH DRUM WHEN ALL ABOVE CRITERIA IS SATISFACTORILY MET.

I hereby certify that the above inspection checklist has been completed, and witness that all above items are correct to the best of my knowledge. I have signed and affixed an NV-211 label to each waste container.

Signed: _____ Date: _____
Quality Verification

BOLT DIAGRAM

BOLT DIAGRAM

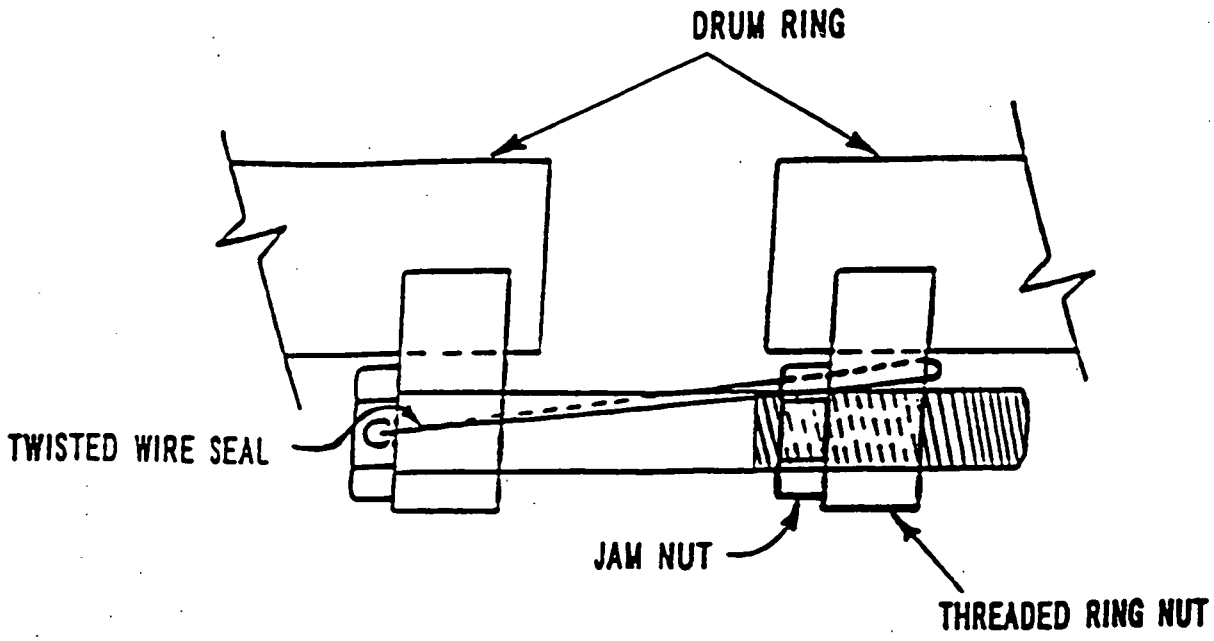

QUALITY L-LRW PRE-LOADING PACKAGE INSPECTION FOR WHITE METAL BOXES (4X4X7)
QP-881115-1, REV. 10 (5/10/94)

QUALITY L-LRW PRE-LOADING PACKAGE INSPECTION
FOR WHITE METAL BOXES (4x4x7)

SHIPMENT NUMBER: WML_____ **NUMBER OF WMBs** _____

		Stamp/Date
1.	Verify there is a Bar Code Label on two long sides and top of each box. (three total)	_____
2.	Verify the Shipment Number, Pkg.# and Waste Stream# on the bar code label matches with the signed PS&DD and the Gross Weight matches the Circle Copy for each WMB.	_____
3.	Verify the paperwork includes the correct Radiological Survey report (initial smears) for all WMBs in the shipment.	_____
4.	One DOT approved Radioactive marking (LSA, LQ, or RQ) is securely affixed to the top of the WMBs.	_____
5.	Verify no erroneous markings present on WMBs.	_____
6.	Verify no significant deformations present on the WMBs.	_____
7.	Verify WMBs are free of scaling rust or sever pitting.	_____
8.	No free liquids on, or emitting from WMBs.	_____
9.	WMBs free of adhering or entrapped soil or debris on all surfaces, especially the bottom.	_____
10.	Identify vent plug is in place and secure.	_____
11.	No drain plug (Black dot) or drain plug tightened (Red dot) painted on lower corner of WMB.	_____
12.	Bolt type closures	
a.	Design: Galbreath, Inc. (41.8" x 55" x 80") NO PROTRUDING FLANGES — No. of Boxes	_____
12a.	Required number of nuts, bolts and washers (26) are in place and tightened. Washers are required on both top and bottom of flange.	_____
b.	Design: Carolina Container (42" x 55" x 80") PROTRUDING FLANGES — No. of Boxes	_____
12b.	Required number of nuts, bolts and washers (26) are in place and tightened. Washers are only required on top of flange.	_____
c.	Design: Container Products (40.5" x 57.25" x 81.25") PROTRUDING FLANGES — No. of Boxes	_____
12c.	Required number of nuts, bolts and washers (26) are in place and tightened. Washers are required on both top and bottom of flange.	_____

QUALITY L-LRW PRE-LOADING PACKAGE INSPECTION FOR WHITE METAL BOXES (4X4X7)
QP-881115-1, REV. 10 (5/10/94)

d. **Design: Electro•Panel (37" x 52" x 76")**
RETAINER RING WITH HASPS **No. for Boxes** _____

12d. Required number of nuts, bolts (28) and hasps (14) are in place and tightened. _____

13. Open holes are in runners (required on both Electro•Panel and Container Products WMBs with boxed-in runners). _____

INSPECTION RESULTS SUMMARY:

PACKAGE NUMBER	ACCEPTED	REJECTED	REWORK ACCEPTED	D.R. NO.	COMMENTS

Comments: _____

SECURELY TIGHTEN TWO TAMPER INDICATION DEVICES (TIDs) ONE IN THE CENTER HOLE ON EACH SIDE FLANGE.

PLACE A SIGNED and DATED NV-211 LABEL ON EACH WMB WHEN ALL ABOVE CRITERIA IS SATISFACTORILY MET.

I hereby certify that the above inspection checklist has been completed, and witness that all above items are correct to the best of my knowledge. I have signed and affixed an NV-211 label to each waste container.

Signed: _____ Date: _____
Quality Verification

Attachment L
Page 1 of 1

GALBREATH INCORPORATED 4X4X7 BOLT SCHEMATIC

GALBREATH
INCORPORATED
WINAMAC, INDIANA

4X4X7

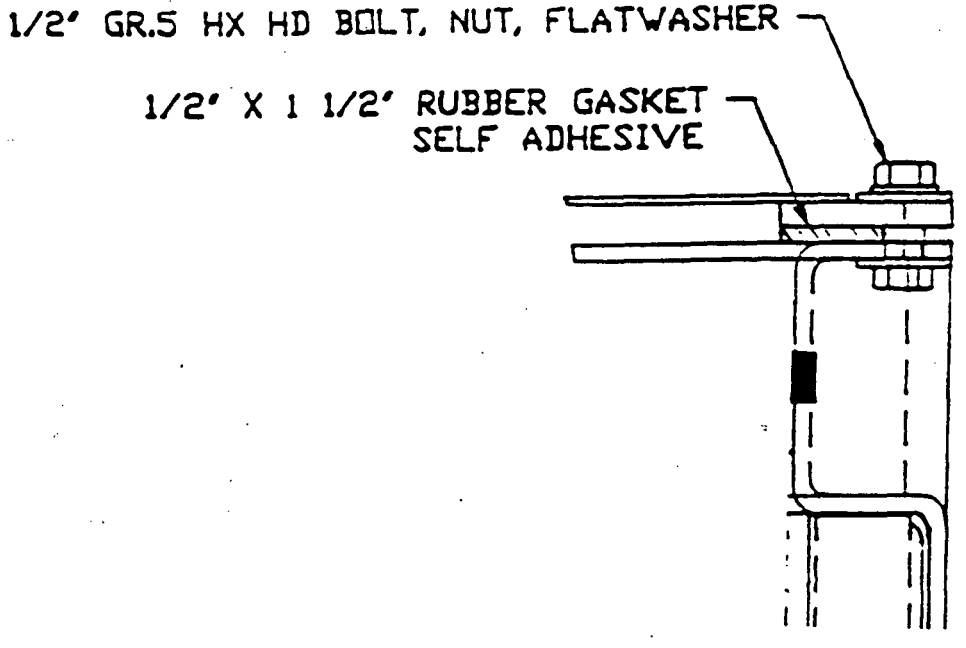

CAROLINA CONTAINER 4X4X7 BOLT SCHEMATIC

Carolina Container
Services
4X4X7

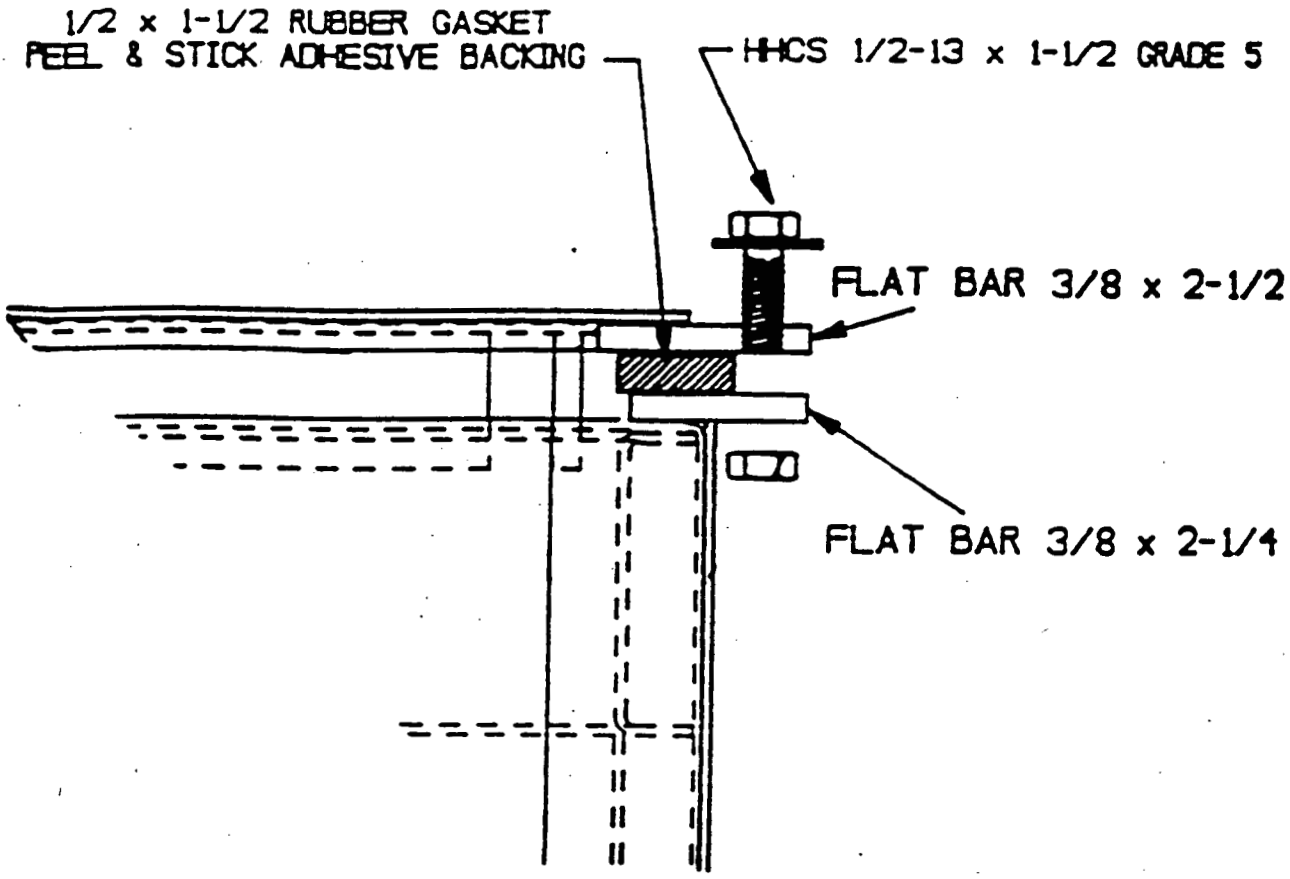

CONTAINER PRODUCTS 4X4X7 BOLT SCHEMATIC

CONTAINER PRODUCTS

4X4X7

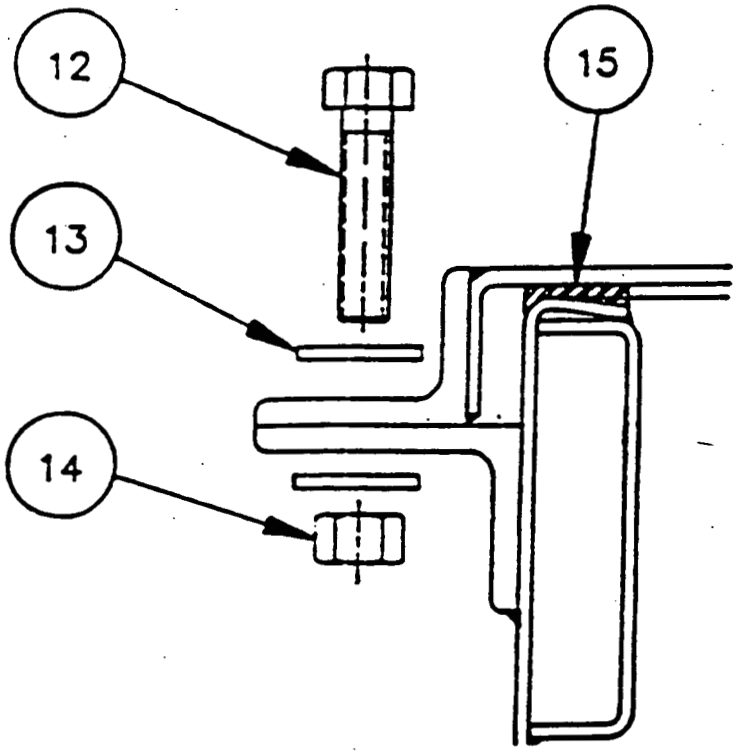

ELECTRO●PANEL 4X4X7 HASP AND BOLT SCHEMATIC

electro-panel

4X4X7

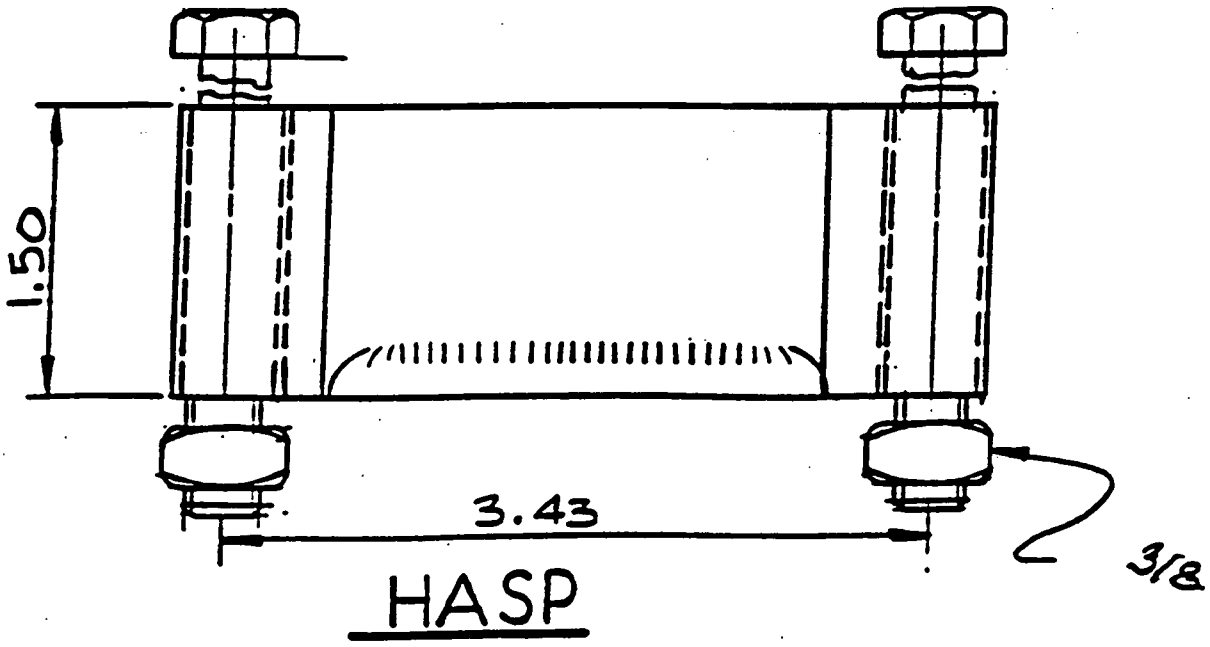

Attachment P
Page 1 of 1

QUALITY L-LRW PRE-LOADING PACKAGE INSPECTION FOR SEALANDS/TL WMBS
QP-880930-1, REV. 5 (5/10/94)

QUALITY PRE-LOADING PACKAGE INSPECTION
FOR SEALANDs/TL WMBs

SECTION I

DATE: _____ SHIPMENT NUMBER: WML_____

CONTAINER STYLE: _____ CONTAINER SERIAL NO.: _____

WEIGHTS: Gross _____ Tare _____ Net _____

INITIALS

1. Verify Card 65-1 (Rev. 11/20/92) is completed accurately. _____

****

SECTION II

1. Verify information on (3) Bar Codes match Circle Copy:

   Shipment Number — Gross Weight
   Container Number — Tare Weight _____

2. Verify Waste Stream listed on Bar Code matches PS&DD. _____

3. Verify paperwork includes correct Radiological Survey (initial smear) listing the packages in the shipment. _____

4. DOT approved Radioactive marking (LSA, RQ, or LQ) is securely affixed to two long sides of the package. _____

5. Radioactive placards present. (4 sides) _____

6. No significant deformations are present. _____

7. No scaling rust or sever pitting. _____

8. No free liquids emitting from the package. _____

9. All erroneous markings have been removed or covered. (the initial tare weight has been removed or lined out) _____

10a. FOR SEALANDS ONLY. The doors are latched, sealed with caulking, and the two latch bars are banded together. _____

b. Verify approved DOT Seal #_____ is attached.

11a. FOR TL WMB ONLY. The lid is closed and properly bolted. in accordance with procedure QP-12.04 _____

b. Verify approved DOT Seal(s) are properly attached.

TL WMB Seal #_____ Seal #_____

I hereby certify the above items have been examined and are correct to the best of my knowledge.

Signed:_____ Date: _____
(Quality Verification)

RADIOACTIVE PLACARD

Attachment R
Page 1 of 1

GALBREATH INCORPORATED 8X8X20 BOLT SCHEMATIC

GALBREATH
INCORPORATED
WINAMAC, INDIANA

8X8X20

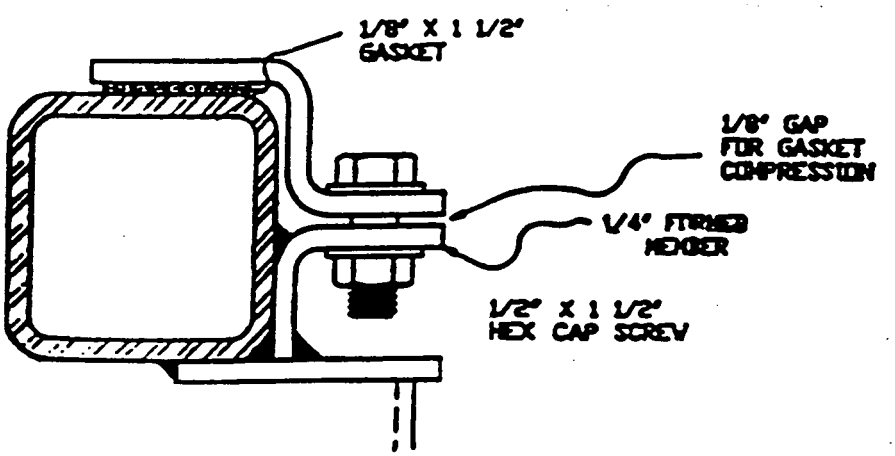

CAROLINA CONTAINER 8X8X20 BOLT SCHEMATIC

CAROLINA CONTAINER
SERVICES

8X8X20

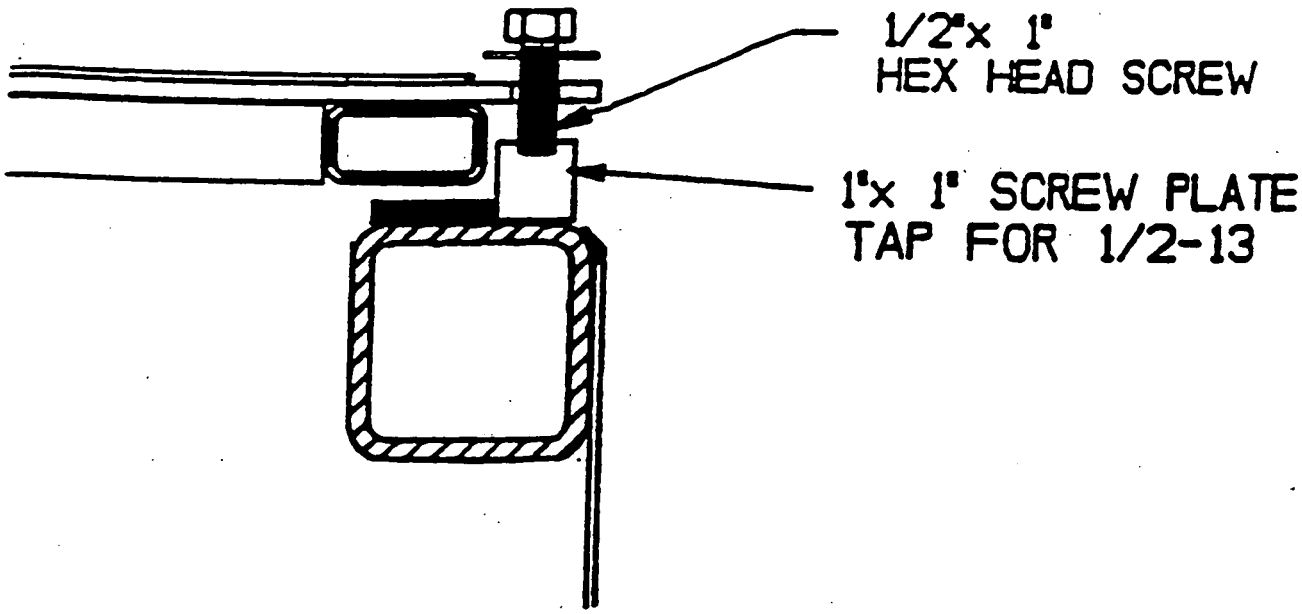

Attachment T
Page 1 of 1

QUALITY L-LRW TRAILER EXAMINATION AT LOADING
QP-880801-1, REV. 6 (5/10/94)

QUALITY L-LRW TRAILER EXAMINATION AT LOADING

SHIPMENT NO WML95_____ LOADING LOCATION:_____

CARRIER: _____ TRAILER NO.: _____

	Stamp	Date
1. Verify a Preliminary Visual Trailer Inspection was completed for empty trailer prior to having been unhooked from tractor.		
2. Verify a EBL radiological survey (FS-F-1596-1) is complete for trailer, and results meet 49 CFR 173.441 requirements.		

(For Vans Only) SEAL# _____

****

3a. Prior to loading, verify seal number is the same as that applied by the RC technician.		VANS ONLY
3b. Verify each package has a signed and dated NV-211 label affixed and TID(s) are present.		
3c Verify each package is free of dirt/loose rock and has no significant deformations or holes.		
3d. Verify there is no free liquid emitting from packages.		
3e. Verify that packages have been properly tied-down as specified by procedure SOP 50-C-109.		
3f. Verify the trailer envelope is affixed to the last package inside the trailer.		
3g. Verify that the loaded trailer rear doors are secured with the DOT approved seal. Seal No. _____		

4a. Verify there is no free liquid emitting from the package.		FLATBEDS
4b. Verify each package has been cleaned of dirt/loose rock and has no significant deformations or holes.		
4c. Verify that the doors of each Sea/Land container are banded and secured with a tamper proof DOT approved seal.		

Package#1 Serial# _____ Seal# _____ _____
(Sea/Land or TL WMB)

Package#2 Serial# _____ Seal# _____ _____
(Sea/Land or TL WMB)

PLACE A SIGNED & DATED NV-211 ON SEA/LAND OR TL/WMB WHEN CRITERIA 4 A-C IS MET AND TAKE ONE (1) PHOTO OF LABEL TO VERIFY IT IS SIGNED AND DATED.

Signed: _____ Date: _____
(Quality Verification)

QUALITY L-LRW FINAL TRAILER/VEHICLE EXAMINATION
QP-880801, REV. 4 (5/10/94)

QUALITY L-LRW FINAL TRAILER/VEHICLE EXAMINATION

SHIPMENT NO WML95_____ TRAILER NO.: _____

1. With the assistance of the off-site driver, verify all of the following are operational on the transport vehicle:

Headlights (low & high beams)	☐
Turn signals	☐
Brake lights	☐
Horn	☐
Windshield Wipers	☐
Trailer tires	☐
Tractor tires	☐

****

2a. Verify the trailer envelope was affixed inside the trailer at loading or has been placed there during this examination.	_____	VAN
2b. Verify the DOT approved seal is in place on the trailer doors.	_____	
2c. Verify there are four (4) placards and type is correct for material. (Radioactive or Drive Safely)	_____	

3a. Verify the four (4) placards are securely affixed to each package. (one on all four sides)	_____	FLATBED
3b. Verify each package has been blocked correctly in accordance with SOP-50-C-108.	_____	
3c. Verify each package has the correct number of chains & straps and is tied down according to SOP-50-C-111.	_____	

****

I certify the above items have been examined and are correct to the best of my knowledge. All photographs have been taken and added to the paperwork file.

Signed: _____ Date: _____ Time: _____
(Quality Verification)

QP-880801, Rev. 4 (05/10/94)

STEP 7.

THIS STEP OR SECTION IS INTENTIONALLY EMPTY BECAUSE
THERE HAVE BEEN NO NEW OR REVISED PROCEDURES

6989

STEP 8.

6989

NON-CONTROLLED COPY

CONTROL NO. [redacted]
SITE PROCEDURE QA-0004 (SSOP-0049)
REVISION NO. 1

FEMP QUALITY ASSURANCE AUDIT PROGRAM

Effective Date: 10-18-93

Originator (Subject Expert): _____
Date

Checker Concurrence: _____
Date

APPROVED BY: Richard E. Kline 3/13/95
Richard E. Kline, FAM of Quality Assurance Date

FERNALD ENVIRONMENTAL MANAGEMENT PROJECT

Fernald Environmental Restoration Management Corporation
P. O. Box 538704
Cincinnati, Ohio 45253-8704

CONTROL NO. FER-0911 6989
SITE STANDARD OPERATING PROCEDURE
DOCUMENT NO. SSOP-0049
REVISION NO. 1

FEMP QUALITY ASSURANCE AUDIT PROGRAM

SSOP-0049

Effective Date: 10-18-93

AUTHORIZED BY: N. C. Kaufman, President — Date: 10/6/93

FERNALD ENVIRONMENTAL MANAGEMENT PROJECT

Fernald Environmental Restoration Management Corporation
P. O. Box 398704
Cincinnati, Ohio 45239-8704

Fernald Environmental FERMCO Restoration Management Corporation	Title: FEMP QUALITY ASSURANCE AUDIT PROGRAM
	DOCUMENT NO: SSOP-0049 REVISION NO: 1
	Effective Date: 10-18-93 — Page 1 of 7

TABLE OF CONTENTS

SECTION	TITLE	PAGE
1.0	PURPOSE	3
2.0	SCOPE	3
3.0	DEFINITIONS	3
4.0	RESPONSIBILITIES	4
5.0	GENERAL	4
6.0	PREREQUISITES	5
6.1	INDUSTRIAL SAFETY AND HEALTH REQUIREMENTS	5
6.2	PERSONNEL REQUIREMENTS	5
6.3	TOOLS AND MATERIALS REQUIRED	5
7.0	PROCEDURE	5
7.1	PLANNING AN AUDIT	5
7.2	CONDUCTING AN AUDIT	5
7.3	CLOSING OUT AN AUDIT	7
7.4	REPORTING STATUS OF THE AUDIT PROGRAM	7
8.0	APPLICABLE DOCUMENTS	7
8.1	DRIVERS	7
8.2	REFERENCES	7

RECORD OF ISSUE/REVISIONS

DATE	REV. NO	DESCRIPTION AND AUTHORITY
08-31-92	0	Document describing the FEMP Audit Program per Request No. S92-062, initiated by J. Weissenberg.
10-18-93	1	Major Revision to update the FEMP Quality Assurance Audit Program, per Request No. S93-127 initiated by D. Ponke. Document supersedes SSOP-0049, dated 08-31-92, Rev. 0.

1.0 PURPOSE

This procedure describes the responsibilities and requirements for planning, conducting, documenting, and processing formal Quality Assurance (QA) audits of Fernald Environmental Management Project (FEMP) activities, suppliers, and services.

2.0 SCOPE

This procedure applies to the QA audit program, which generates audits at the FEMP as required by Department of Energy (DOE) Orders and Directives and all those who are audited.

3.0 DEFINITIONS

Assess - To inspect, test, review, or otherwise determine if items, actions, or services conform to specified requirements.

Audit - A planned and documented activity performed by investigation, examination, or evaluation of objective evidence to determine the adequacy and compliance with established procedures, instructions, drawings, and other applicable documents and the effectiveness of their implementation.

Audit Team Leader (Lead Auditor) - An individual qualified and certified to organize and direct an audit, report audit observations, and evaluate corrective actions. These individuals meet the Lead Auditor requirements of ANSI/ASME NQA-1 Basic requirement 2, Supplement 2.S-3 and Appendix 2A-3.

Corrective Action Report (CAR) - A form used by the QA Division for the identification, disposition, verification of corrective action, and closure of a condition identified as significantly adverse to quality, a violation of regulatory requirements, or a programmatic breakdown.

Deviation Report (DR) - A form used to document the identification, disposition, verification of resolution, and closure of a specific deviation.

Internal Independent Audit - A formal examination and evaluation of a FERMCO organization's activities by the FERMCO QA Division.

Supplier Audit - A formal examination and evaluation by QA of the fabrication of items or performance of services provided to the FEMP by contracted vendors.

4.0 RESPONSIBILITIES

Quality Assurance Audits and Appraisals (A&A) Manager

- Plans and directs a comprehensive audit schedule.
- Ensures departmental procedures are prepared for the audit program.
- Provides for the training of auditors and audit team leaders.

Division Manager

- Ensures their division procedures comply with appropriate DOE Orders, governmental regulations, and departmental procedures with scheduled self-assessments.
- When requested by the auditing organization, reviews and concurs with audit plans and schedules; provides technical representatives and auditors for audit teams; and ensures timely, approved implementation of deviation dispositions, corrective action plans, and schedules.
- Cooperates with and responds to audit teams.

Audit Team Leader

- Plans, directs, and leads assigned audit to assess the adequacy, implementation, and effectiveness of work control systems.
- Reports the results of the audit to the manager of the audited organization and the QA A&A Manager identifying work practices and procedures that require corrective action, improvement, and commendation.

5.0 GENERAL

- FEMP QA Division audits shall be planned, scheduled, and conducted by A&A with the support and participation of other FERMCO divisions.
- Audit team members shall have access to all records, personnel, and facilities relevant to the performance of audits.
- Organizations shall develop their own procedures for implementing and internally assessing their established responsibilities.
- Divisions shall provide A&A with an overview of their respective self-assessment programs to assist in audits, avoid duplication, refine inter-relationships, and strengthen program performance.

6.0 PREREQUISITES

6.1 INDUSTRIAL SAFETY AND HEALTH REQUIREMENTS

Ascertain the status of the work area before an audit. If the work area is a controlled, regulated, contaminated, or radioactive area, it must comply with the requirements of existing Radiation Work Permits (RWPs), or the auditor must request a RWP from Radiation Compliance.

6.2 PERSONNEL REQUIREMENTS

Audit Team Leaders shall assess the training requirements for the areas to be audited and ensure audit team members are properly trained.

6.3 TOOLS AND MATERIALS REQUIRED

None

7.0 PROCEDURE

7.1 PLANNING AN AUDIT

QUALITY ASSURANCE AUDITS AND APPRAISALS MANAGER

1. Develop a comprehensive schedule for audits on a near-term (quarterly) and long-term (annual) basis.

2. Assign certified Audit Team Leaders; trained and qualified team members; and trained, qualified, and certified specialists all independent of the activities being audited.

7.2 CONDUCTING AN AUDIT

QUALITY ASSURANCE AUDITS AND APPRAISALS MANAGER

1. Organize audit teams:

   a. Provide team members.

   b. Request team members and/or specialists from other departments.

OTHER DEPARTMENT MANAGERS

2. Provide audit team members (as requested).

7.2 CONDUCTING AN AUDIT (cont.)

TEAM LEADER

3. Prepare individual audit plan (including definition of the scope and expected duration) for applicable site and division procedures applicable to the activity being audited.

4. Obtain approval of the audit plan from QA A&A Manager.

QUALITY ASSURANCE AUDITS AND APPRAISALS MANAGER

5. Approve and issue plan to the organization to be audited.

TEAM LEADER

6. Coordinate audits with the manager of the organization to be audited (FERMCO or the appropriate contract personnel) in accordance with QA Division procedures:

   a. Conduct a pre-audit meeting with the organization to be audited.

   b. Direct the team in conducting the audit.

   c. Conduct a post-audit meeting with the organization audited.

7. Record each identified deviating condition on a Deviation Report (DR) or a Corrective Action Report (CAR) per SSOP-0023, "Deviation and Corrective Action Reporting."

8. Prepare the audit report.

9. Submit the report with applicable DRs and/or CARs to the QA A&A Manager.

QUALITY ASSURANCE AUDITS AND APPRAISALS MANAGER

10. Issue DRs and/or CARs in accordance with SSOP-0023, "Deviation and Corrective Action Reporting."

11. Issue the audit report to responsible management within 30 days of audit completion, requesting corrective action.

7.3 CLOSING OUT AN AUDIT

AUDITED ORGANIZATION MANAGER

1. Respond to each DR and/or CAR in accordance with SSOP-0023, "Deviation and Corrective Action Reporting."

QUALITY ASSURANCE AUDITS AND APPRAISALS MANAGER

2. Evaluate response to DR and/or CAR in accordance with SSOP-0023, "Deviation and Corrective Action Reporting."

3. Issue a letter to the affected manager closing the audit when all deviations and/or corrective actions have been completed and closed.

4. Issue a bimonthly status report of open audit CARs to the President, the division managers, and all others responsible for corrective actions.

7.4 REPORTING STATUS OF THE AUDIT PROGRAM

QUALITY ASSURANCE SYSTEMS MANAGER

1. Prepare an annual report showing the status, adequacy, and effectiveness of the FEMP operations revealed by the audits and their solutions.

2. Submit the report to the FERMCO President.

8.0 APPLICABLE DOCUMENTS

8.1 DRIVERS

- DOE Order 5700.6C, "Quality Assurance"
- RM-0012, "Quality Assurance Program Description"

8.2 REFERENCES

- SSOP-0023, "Deviation and Corrective Action Reporting"
- ANSI/ASME NQA-1, "Quality Assurance Program for Nuclear Facilities"

STEP 9.

THIS STEP OR SECTION IS INTENTIONALLY EMPTY BECAUSE
THERE HAVE BEEN NO NEW OR REVISED PROCEDURES

6989

STEP 10.

THIS STEP OR SECTION IS INTENTIONALLY EMPTY BECAUSE
THERE HAVE BEEN NO NEW OR REVISED PROCEDURES

SIBP 11.

THIS STEP OR SECTION IS INTENTIONALLY EMPTY BECAUSE THERE HAVE BEEN NO NEW OR REVISED PROCEDURES