7018 G-000-705.124

HYDROFLUORIC ACID NEUTRALIZATION PROJECT AUDITABLE SAFETY ANALYSIS 92-1029 - FINAL REPORT

03/00/95

FEMP-2406
FERMCO DOE-FN
88
FINAL REPORT

FEMP-2406

Hydrofluoric Acid Neutralization Project

Auditable Safety Analysis 92-1029

by Ronald J. Bartos

March 1995

FINAL REPORT

DISCLAIMER

This report was prepared as an account of work sponsored by an agency of the United States Government. Neither the U. S. Government nor any agency/Department thereof, nor their employees, nor any of its contractors, subcontractors nor their employees, makes any warranty, express or implied, or assumes any legal liability or responsibility for the accuracy, completeness, or usefulness of any information, apparatus, product or process disclosed, or represents that its use would not infringe upon privately owned rights. Reference herein to any specific commercial product, process, or service by trade name, trademark, manufacturer, or otherwise does not constitute or imply its endorsement, recommendation, or favoring by the United States Government or any agency thereof. The views and opinions of authors expressed herein do not necessarily state or reflect those of the United States Government, or any agency thereof or Fernald Environmental Restoration Management Corporation, its affiliates or its parent companies.

Prepared By

Fernald Environmental Restoration Management Corporation
Fernald Environmental Management Project
P. O. Box 538704
Cincinnati, OH 45253-8704

Prepared for the
U. S. Department of Energy
Fernald Field Office
Under Contract DE-AC24-92OH21972

FEMP-2406

Hydrofluoric Acid Neutralization Project

Auditable Safety Analysis 92-1029

by Ronald J. Bartos

March 1995

FINAL REPORT

DISCLAIMER

This report was prepared as an account of work sponsored by an agency of the United States Government. Neither the U. S. Government nor any agency/Department thereof, nor their employees, nor any of its contractors, subcontractors nor their employees, makes any warranty, express or implied, or assumes any legal liability or responsibility for the accuracy, completeness, or usefulness of any information, apparatus, product or process disclosed, or represents that its use would not infringe upon privately owned rights. Reference herein to any specific commercial product, process, or service by trade name, trademark, manufacturer, or otherwise does not constitute or imply its endorsement, recommendation, or favoring by the United States Government or any agency thereof. The views and opinions of authors expressed herein do not necessarily state or reflect those of the United States Government, or any agency thereof or Fernald Environmental Restoration Management Corporation, its affiliates or its parent companies.

Prepared By

Fernald Environmental Restoration Management Corporation
Fernald Environmental Management Project
P. O. Box 538704
Cincinnati, OH 45253-8704

Prepared for the
U. S. Department of Energy
Fernald Field Office
Under Contract DE-AC24-92OH21972

Hydrofluoric Acid Neutralization Project
Auditable Safety Analysis 92-1029

Prepared by:

Ronald J. Bartos Date 3-20-95
Ronald J. Bartos, System Safety, Safety Analysis Department, S&H Division

Approved by:

Fred G. Krach Date 3/20/95
Fred G. Krach, Manager, System Safety, Safety Analysis Dept., S&H Division

E. R. Schmidt Date 3/20/95
E. R. Schmidt, Manager, Safety Analysis Department, S&H Division

Stuart L. Hinnefeld Date 3/22/95
Stuart L. Hinnefeld, Vice President, S&H Division

John M. Lippitt Date 3/20/95
John M. Lippitt, Project Manager, HF Neutralization Project, CRU-3 Engrg.

for DMG Date 3/21/95
Diane Garrett, Mgr of Facility Programs, Remediation Support/Operations Div.

Concurrence:

Richard E. Kline Date 3/23/95
Richard E. Kline, Chairman, Independent Safety Review Committee

Approval:

Date 3/23/95
Don Ofte, President, FERMCO

Table of Contents

Acronyms and Abbreviations v

ES. Executive Summary vi
ES.1 Introduction vi
ES.2 Facility Description vi
ES.3 Hazard Assessment vi
ES.4 Conclusion vii

1.0 Introduction 1
1.1 Background 1
1.2 Auditable Safety Analysis Objectives and Criteria 1
1.3 Organization of the Auditable Safety Analysis 2

2.0 Facility Description 2
2.1 Location 2
2.2 Equipment 2
2.3 Operations 5
2.3.1 Operating Procedures 9
2.3.2 Emergency Procedures 10
2.3.3 Secondary Containment 10
2.3.4 Operating Personnel 11
2.3.5 Interfaces with other Facilities and Operations 11
2.4 Inventory of Radioactive and Hazardous Materials 11
2.4.1 Radioactive Materials 11
2.4.2 Hazardous Materials 11
2.5 Facility Classification 11

3.0 Hazard Assessment 12
3.1 Hazards 12
3.1.1 Preliminary Hazard Analysis Results 12
3.1.2 Hazard & Operability Analysis Results 12
3.1.3 Fault Tree Analysis Results 14
3.1.4 Discussion of Hazards and Controls 14
3.2 Consequences 16
3.3 Hazard Classification 17
3.3.1 Exposure Guidelines 17
3.3.2 Comparison with Exposure Guidelines 18

4.0 Conclusions 19
4.1 Facility Hazard Classification 19
4.2 Safety Documentation 19

5.0 References 19

Appendices

A - Preliminary Hazard Analysis 21
B - Hazard & Operability Analysis 34
C - Supporting Calculations 54
D - Design Criteria 65
E - Fault Tree Analysis 66

Table of Contents continued

List of Figures

Figure 1 DOE-EM Hazard Baseline Documentation Process 3
Figure 2 Location of HF tank car and Tank Farm 4
Figure 3 HF Neutralization Process P&ID 6
Figure 4 Hazard Classification Guidance 18
Figure 5 Case 1 Source Terms 58
Figure 6 Case 1 Downwind Centerline Ground-Level Concentrations 59
Figure 7 Case 2 Source Terms 61
Figure 8 Case 2 Downwind Centerline Ground-Level Concentrations 63

List of Tables

Table 1 Potential Hazards 12, 22
Table 2 Hazard Identification Matrix 13
Table 3 Hazard Severity Classification 36
Table 4 Risk Assessment Matrix 36

ACRONYMS and ABBREVIATIONS

ARF	Airborne Release Fraction
AEDO	Alternate Emergency Duty Officer
AIHA	American Industrial Hygiene Association
ASA	Auditable Safety Analysis
BDN	Biodenitrification Facility
CB	Catch Basin
CERCLA	Comprehensive Environmental Response, Compensation and Liability Act
CFR	Code of Federal Regulations
CPID	Closure Plan Information and Data
CPVC	Cross-linked Polyvinyl Chloride
CRU-3	CERCLA/RCRA Unit 3
CSIP	Conceptual System Implementation Plan
D&D	Decontamination and Dismantlement
DOE-EM	U. S. Department of Energy, Office of Environmental Management
DOE-FN	U. S. Department of Energy Fernald Field Office
DOE-OH	U. S. Department of Energy Ohio Area Office
ERPG	Emergency Response Planning Guideline
FEMP	Fernald Environmental Management Project
FERMCO	Fernald Environmental Restoration Management Corporation
FTA	Fault Tree Analysis
GFCI	Ground Fault Circuit Interrupter
HASP	Health and Safety Plan
HAZOP	Hazard and Operability Analysis
HF	Hydrofluoric Acid
HWMU	Hazardous Waste Management Unit
IDLH	Immediately Dangerous to Life or Health
IH	Industrial Hygiene
ISRC	Independent Safety Review Committee
LLW	Low Level Radioactive Waste
MHE	Material Handling Equipment
MSDS	Material Safety Data Sheet
NEMA	National Electrical Manufacturers Association
NIOSH	National Institute for Occupational Safety and Health
NTS	Nevada Test Site
OSHA	Occupational Safety and Health Act
PEL	Permissible Exposure Limit
PHA	Preliminary Hazard Analysis
PPE	Personal Protective Equipment
PSM	Process Safety Management
PVC	Polyvinyl chloride
QA	Quality Assurance
RA	Readiness Assessment
RCRA	Resource Conservation and Recovery Act
RF	Respirable Fraction
RSO	FERMCO Remediation Support Operation Division
RQ	Reportable Quantity
RWP	Radiation Work Permit
S&H	FERMCO Safety and Health Division
SOP	Standard Operating Procedure
SWRB	Storm Water Retention Basin
TLV	Threshold Limit Value
TWA	Time Weighted Average
WEMCO	Westinghouse Environmental Management Company
WSRC	Westinghouse Savannah River Corporation

ES. Executive Summary

ES.1 Introduction

This Auditable Safety Analysis (ASA) evaluates the potential significance of hazards associated with the hydrofluoric acid (HF) tank car closure action. The purpose of this closure action is to remove the FEMP's Hazardous Waste Management Unit (HWMU) #38 using a chemical neutralization process. The objective of this document is to perform the safety analysis necessary to assess the risk of potential hazards presented by the proposed neutralization process, to evaluate the hazard classification, and to determine the level of safety analysis and review appropriate for the HF neutralization in accordance with guidance and criteria provided in DOE Limited Standard DOE-EM-STD-5502-94, *Hazard Baseline Documentation*. This document satisfies the safety analysis documentation requirements of DOE Order 5481.1B *Safety Analysis and Review System* since the ASA is not required to follow the documentation requirements of DOE Order 5480.23 *Nuclear Safety Analysis Reports*.

ES.2 Facility Description

This HWMU consists of about 4400 gallons of 28.7% dilute HF in a 40-year old railroad tank car (# OROX17501) currently located on a rail siding in the Tank Farm. This project does not include neutralization of about 775 gallons of HF in the dumpster nor the heel of HF in tank car # DBDX17503. On April 14, 1994 the tank car was moved from rail siding #6 east of the Tank Farm to its current location over the secondary containment pit in the Tank Farm. It has also been sampled to provide material for bench scale testing. The project has completed the detailed design phase and a Request for Construction Action and a Request for RSO Action to operate the system have been issued.

The process consists of producing a 10% solids neutralization slurry made of 70% lime ($Ca(OH)_2$) and 30% calcium carbonate ($CaCO_3$) in a neutralization tank; pumping the HF from the tank car into the tank at a slow, pH-controlled rate to produce a calcium fluoride precipitate/water slurry and carbon dioxide; then transporting this slurry to Plant 8 where it will be filtered and drummed for eventual disposal. The filtrate will be tested to confirm wastewater compliance and discharged through the FEMP Wastewater Treatment System. The neutralization reaction produces significant amounts of heat and carbon dioxide, so control of the reaction is of importance in order to prevent an excessive rate of heat or pressure generation. The neutralization project employs a batch process requiring about 31 batches to empty the tank car. With each batch lasting one 8-hour shift, the project should take 31 work days.

The radioactive inventory in the tank car is about 911 g (2.0 lb) of uranium which is below the Hazard Category 3 threshold of DOE-STD-1027-92. The tank car contains below the Reportable Quantity (RQ) for radioactive materials listed in Appendix B of Table 302.4 of 40 CFR 302.4, *Designation of Hazardous Substances*, and the amount of HF is above the RQ value for hazardous materials in Table 302.4 of 40 CFR 302.4 so it is a non-nuclear facility. Dilute liquid HF is not listed in 29 CFR 1910.119, *Process Safety Management* nor in 40 CFR 355, *Emergency Planning and Notification*.

ES.3 Hazard Assessment

The only identified safety risk to workers or the public from a non-standard industrial hazard is HF exposure due to a release of HF to the

environment. HF could be released in the event that the HF tank car, HF transfer pump, valves, neutralization tank, or HF pipe integrity is breached by overpressure, hydrogen explosion, or by thermal damage to the tank liner. The most significant safety concern is the proximity of the process to workers using Building 12A, Building 4A, and 2nd and "B" Streets.

To assess and control the hazards presented by the processing, an integrated Preliminary Hazard Analysis was conducted to identify worker safety hazards and recommend hazard controls and mitigators. A Fault Tree Analysis was prepared to determine the combinations of failures or events which could result in "Inadvertent HF Pumping". A Hazard & Operability Analysis was performed on the process by a multi-disciplinary team to identify potential abnormal process conditions which could lead to HF release or other hazards. Recommendations concerning the process and facility designs have been included in project specification and requirements documents. Recommendations to operating procedures and the Health & Safety Plan (HASP) have been satisfactorily dispositioned. Automatic sensors and controls on the neutralization tank and HF transfer pump will provide adequate controls of the reaction process.

Dispersion analyses were conducted to estimate potential exposures from the bounding scenario of an HF release to determine the hazard classification. The results showed the bounding scenario presents less than a Low chemical hazard to on-site workers or the off-site public as defined in DOE Order 5481.1B. These exposures are 11.1 ppm at 100 m and 0.34 ppm off-site at 700 m, which are below the Low Hazard exposure guidelines of ERPG-2 (20 ppm) on-site and ERPG-1 (5 ppm) off-site according to WSRC-MS-92-206.

ES.4 Conclusion

The HF neutralization process facility is a non-nuclear facility since the radioactive inventory is below the Reportable Quantity listed in Appendix B to Table 302.4 of 40 CFR 302.4, and the hazardous material inventory is above the RQ listed in Table 302.4 of 40 CFR 302.4. The facility is further classified as a Low Hazard according to the chemical hazard classification criteria of WEMCO SP-A-01-013 and WSRC-MS-92-206. DOE-EM-STD-5502-94 requires that an Auditable Safety Analysis and a HASP be developed for this facility classification. A Readiness Assessment (RA) will be conducted as a best management practice.

Although Process Safety Management is not required, together this ASA, the PHA, HAZOP, FTA, HASP, RA, Start-up testing, Quality Assurance Plan, HF Project internal readiness checklist, adherence to Operations and Maintenance Procedures, Training and Qualification of personnel, Conduct of Operations program, Emergency Response Plans, and the Conceptual System Implementation Plan incorporate the appropriate elements, principles and requirements of Process Safety Management.

Strict adherence to Operation and Maintenance Procedures, and proper implementation of personal protective equipment and Safety Procedures defined in the Project Specific Health & Safety Requirements Matrix will protect the health and safety of site workers and the public, and will control the residual safety risks. While workers using Building 12A, Building 4A and 2nd and "B" Streets could be exposed to a Low hazard if there is an HF release, the Tank Farm exclusion zone and emergency response actions will be adequate to protect workers if an HF release occurs.

1.0 Introduction

This Auditable Safety Analysis (ASA) evaluates the potential significance of hazards associated with the HF neutralization process. The objective of this analysis is to classify the severity of the potential hazards presented by the proposed neutralization process, and to determine the level of safety analysis and review appropriate for the HF neutralization in accordance with guidance and criteria provided in DOE Limited Standard DOE-EM-STD-5502-94, *Hazard Baseline Documentation*.[1] This document also satisfies the safety analysis documentation requirements of DOE Order 5481.1B, *Safety Analysis and Review System*.[2]

1.1 Background

The HF tank car (#OROX17501) is about 40 years old and was in use at the FEMP for nearly 15 years. Prior to October 1988, the HF tank car was used to batch 28.7 weight percent HF solution which was commercially sold. In October 1988, a batch of HF solution was returned from a prospective buyer because it contained low levels of uranium. The HF in the tank car exceeds regulatory limits for speculative accumulation and 90-day storage. As a result, the HF was declared a corrosive hazardous waste and in June 1991 the HF tank car was identified as Hazardous Waste Management Unit (HWMU) No. 38. The tank car is about ten feet wide by 36 feet long by 15 feet high. It is a rubber-lined, mild steel tank car.

It is the intention of FEMP management to demonstrate clean closure of the HF tank car by analyzing samples from the decontamination rinseate of the tank car after the HF is removed. "Closure action" is a FEMP term defined as cleaning up and closing a HWMU. It differs from a removal action since it is of a more limited scope. The objectives of the closure action are to:

- Remove and neutralize all the HF stored in the tank car.
- Eliminate the potential for escape of this hazardous waste to protect human health and the environment.
- Conduct closure actions according to the HF Tank Car Closure Plan Information and Data (CPID).[3]

1.2 Auditable Safety Analysis Objectives and Criteria

The objectives of this ASA are to provide a comprehensive evaluation of the hazards, and an inventory of hazardous materials associated with the HF tank car closure action to determine:

1. the facility classification -- nuclear vs. non-nuclear,
2. the type of safety analysis and documentation required, and
3. the level of review required for that safety documentation, which is based on the hazard classification.
4. what controls, if any, are necessary to ensure this work can be done safely

To accomplish these objectives, this ASA evaluates the nature of the equipment and operations, the types and quantities of radioactive and hazardous materials, and the nature and potential severity of hazards to worker and public health and safety.

Figure 1 on page 3 shows the DOE-EM Hazard Baseline Documentation Process as described in DOE-EM-STD-5502-94. A facility is defined as "nuclear" if the radiological releasable inventory meets or exceeds the thresholds shown in DOE-STD-1027-92[4] Attachment 1 for Category 3 facilities. The facility is classified as "non-nuclear" if this radiological inventory is below the Reportable Quantity (RQ) listed in Appendix B to Table 302.4 of 40 CFR 302.4[5] and the amount of potentially releasable hazardous material exceeds the RQ values listed in Table 302.4 of 40 CFR 302.4. Non-nuclear facilities with inventories at or above the Threshold Quantities listed in 29 CFR 1910.119, *Process Safety Management (PSM) of Highly Hazardous Chemicals*,[6] or 40 CFR 355, *Emergency Planning and Notification*,[7] must develop a safety analysis which integrates the elements, principles and requirements of PSM, that is, the team approach to process and hazards analysis.

1.3 Organization of the Auditable Safety Analysis

The facility and operation descriptions are described in Section 2.0, Facility Description, along with the safety features designed into the system. Section 2.0 also presents the radioactive and hazardous material inventories which determine the facility classification.

Section 3.0, Hazard Assessment, summarizes the hazard analyses, including the integrated Preliminary Hazard Analysis, the Hazard & Operability Analysis, and the accident analysis. The Conclusion is in Section 4.0, stating the facility hazard classification and the associated required safety documentation. References are provided in Section 5.0.

2.0 Facility Description

2.1 Location

The tank car is currently located on railway siding track #7 over the secondary containment pit west of the Main Tank Farm and the Maintenance Service Building (Building 12A). The tank car was safely moved from the HWMU located on an elevated rail siding of track #6 east of the Tank Farm to the secondary containment area on April 14, 1994. The Tank Farm and the secondary containment pit are at the northeast corner of the intersection of 2nd and "B" Streets.The neutralization process will take place at the rail car secondary containment pit and in the Tank Farm. The tank car will remain over the containment pit. The HF transfer pump will be located on a grated platform on top of the HF tank car. The rest of the neutralization system will be located in the Tank Farm. The resulting neutralized slurry will be filtered and drummed at Plant 8. Figure 2 on page 4 shows the location of the HF tank car, the exclusion zone and the control panel.

2.2 Equipment

The process will employ the existing tank car, an HF transfer pump, a 1400-gallon neutralization tank equipped with a variable speed agitator, transfer lines, a 250 GPM neutralized slurry pump, a control panel, and a bag splitter-hopper-screw conveyor system for the addition of the lime/calcium carbonate solids. A dust collector will be used in the lime house (Bldg. 19E) to prevent dust from accumulating. A forklift will be used to deliver powdered lime and calcium carbonate to the lime house. A transfer vehicle will transport the slurry to Plant 8 in two portable dumpsters with. A rotating sprayer

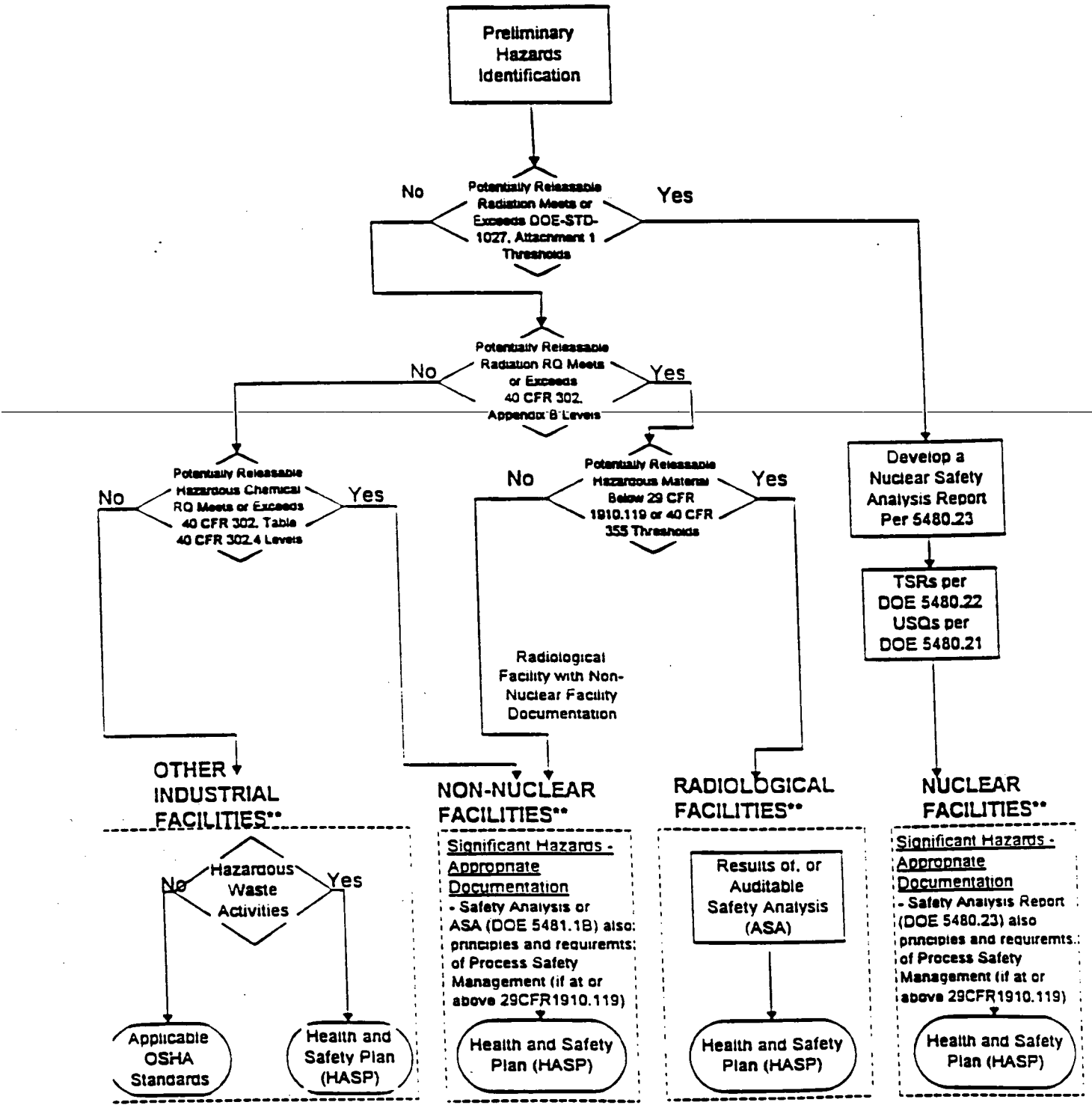

Figure 1 DOE-EM Hazard Baseline Documentation Process

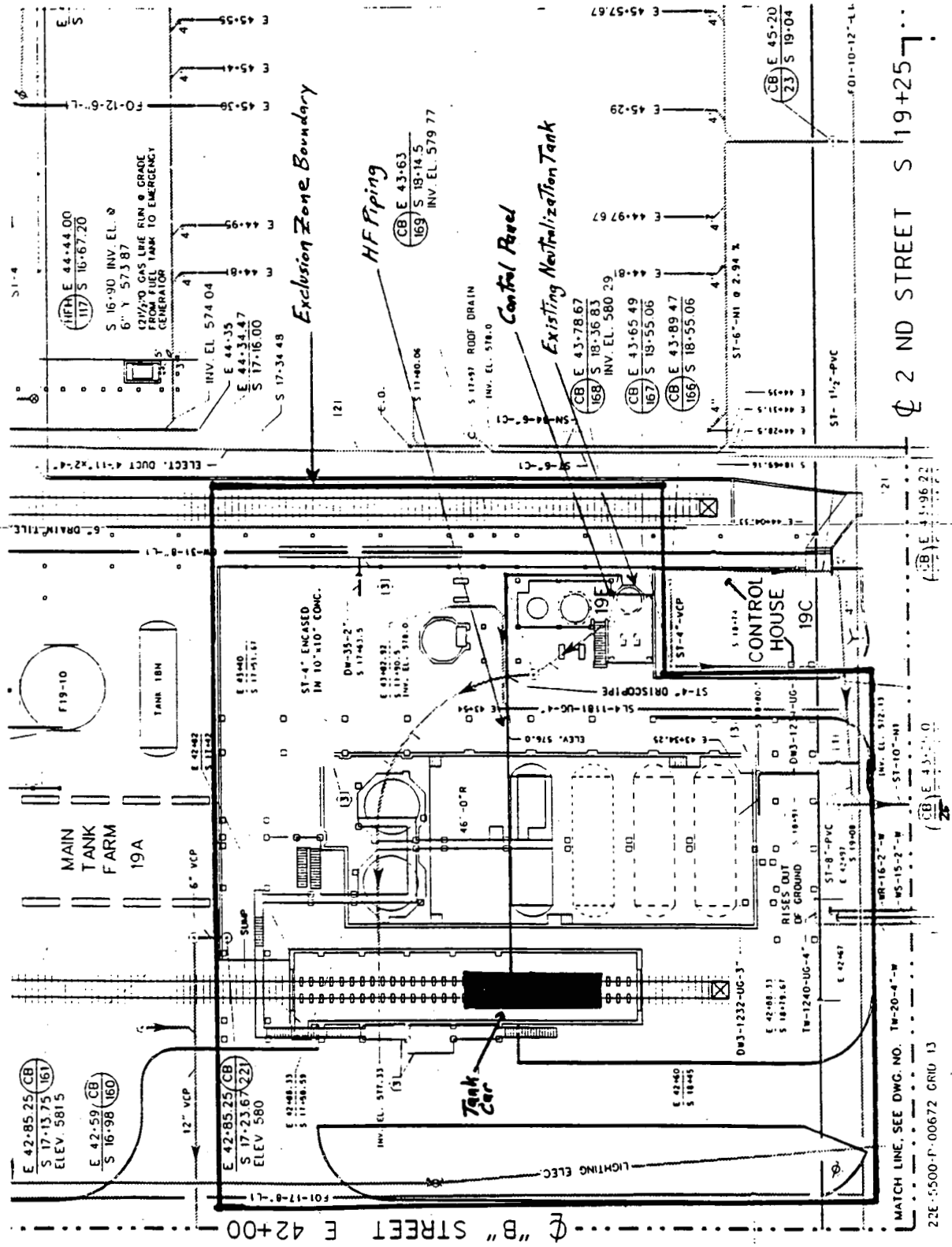

Figure 2 Location of the HF tank car and the Tank Farm

head with wand will be used to flush the tank car with water. Decontamination equipment will be available at the containment pit. Sampling equipment will be used to sample the rinseate. Figure 3 shows the HF Neutralization Process Piping & Instrumentation Diagram (P&ID).

2.3 Operations and Design Safety Features

All design features referred to below are in the *HF Neutralization System Installation Specification and Requirements*.[8] Operations details can be found in the *HF Neutralization Project Conceptual System Implementation Plan (CSIP)*.[8] The Request for Construction Action requires that all instrumentation be calibrated and all control loops be functionally checked by site personnel prior to operation. The Testing/Startup Plan will require initial calibration of all equipment and the Operating Procedure will define calibration schedules.

Production of neutralization slurry

A 10% solids neutralization slurry consisting of 70% lime ($Ca(OH)_2$) and 30% calcium carbonate ($CaCO_3$) will be used for processing the HF. The slurry will be prepared in the neutralization tank (Tank #T-19X-4000) by first adding a pre-set volume of water (968 gal) to the tank using a flow quantity controller and a solenoid actuated valve. The water addition line will have a backflow preventer to preclude any of the neutralization tank contents from entering the plant water system. Dual tank level controllers in series are each capable of stopping the input of water if the level in the tank gets too high. Next, 625 pounds of solid lime and 268 pounds of solid calcium carbonate will be added into the neutralization tank by loading bags of lime and calcium carbonate into a bag splitter located above the neutralization tank in the "lime house", where the bags will be automatically cut open allowing the solids to drop into a hopper. There is an interlock on the bag splitter so the splitter saw cannot be energized without the barrier door being closed. From there, a screw conveyor will transport the solids to a chute allowing them to free-fall into the tank. A dust collector is installed over the bag splitter to exhaust any dust generated. The tank agitator has two sets of 25-inch diameter axial flow blades controlled by an electric variable speed drive which will rotate at about 84 rpm during the addition of neutralization solids and HF, and for 15 minutes after HF flow stops.

Addition of HF to neutralization tank

HF is added to the neutralization tank with an electrically-powered, dual headed diaphragm transfer pump. The HF flow from the tank car to the tank will be controlled at a pre-set operating rate of 1.7 gpm. The HF transfer pump must be turned ON manually from all commanded OFF conditions using an on/off switch located beside the rail car near the HF transfer pump. Shut-off control of the pump and the actuated solenoid valve (SY-19-269A) is commanded manually, or automatically by LOW pH, HIGH temperature or HIGH/LOW level sensors in the neutralization tank or high pressure sensors on the discharge line downstream of the HF transfer pump. The HF will be pumped out of the tank car through the existing tank car dip tube, up through the transfer pump, and then via a transfer line to the neutralization tank. Operation of the tank will be through a sequential batch process. During a typical batch, a total of 143 gal of HF will be transferred from the tank car to the neutralization tank. About 31 batches will be required to neutralize the tank car contents. One batch will take about five hours to process (later batches may take less time with experience gained), so one batch will be completed per day. Pumping the 143 gal batch of HF from the tank car to the neutralization tank will take about 90 minutes.

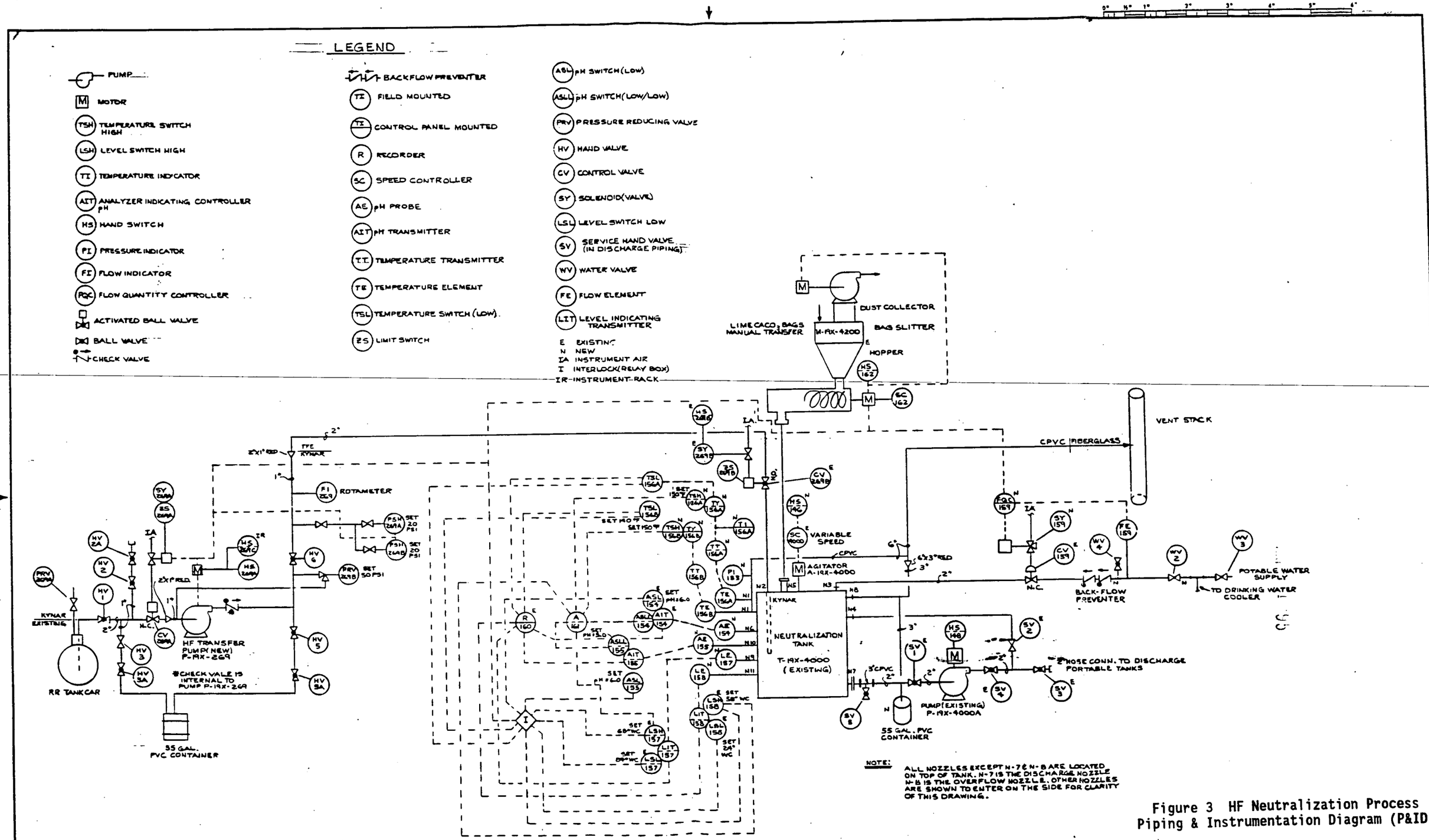

Figure 3 HF Neutralization Process Piping & Instrumentation Diagram (P&ID)

NO	REVISIONS	DATE DWN. BY APPD.	NO.	REVISIONS	DATE DWN. BY APPD.	REF. DWG. NO.	REF. DWG. NO.

APPROVALS: CIVIL & STR. | SAFETY ENG. | ELECTRICAL | MAINTENANCE | ENGINEER | Q.A. | INSTRUMENT | FIRE PROTECT. | MECHANICAL | WASTE MANAGE | SECURITY | CHECKED | APPROVED

FERNALD ENVIRONMENTAL RESTORATION MANAGEMENT CORPORATION
Fernald
Environmental Management Project
U.S. DEPARTMENT OF ENERGY

TANK FARM PROJECT
INSTRUMENTATION P.&I.D.
DATE 08-16-95
DRAWN R.S. NORMAN
SKETCH 19-2

HF transfer pump system design safety features

The HF transfer pump and the solenoid-actuated ball valve upstream of the pump are interlocked together so the HF transfer pump may not operate without the valve energized open, and the valve will close when the HF transfer pump is de-energized. The HF transfer pump can only be powered-on manually by a switch near the pump. The HF pump can be manually shut off by either the circuit breaker in the area power control room, the switch near the pump, or by an emergency stop switch on the control panel at the neutralization tank. The solenoid-actuated valve upstream of the neutralization tank is powered by a hand-operated selector switch at the control panel which can stop the flow of HF into the tank immediately. Indicator lights on the pump and the control panel confirm that the pump is energized.

The HF transfer pump has an internal check valve to prevent reverse flow through the pump when it is off. To protect the downstream piping and components from overpressure, dual pressure switches downstream of the pump will turn the pump off if the pump pressure output exceeds 20 psig. The pump also has a recycle circuit which will recycle the flow to the suction side of the pump if the pump output exceeds 50 psig via a pressure relief valve downstream of the pump. The pump, valves, flanges and piping will be constructed with materials compatible with HF, either Kynar or teflon-lined. A section of existing piping in the Tank Farm to be used for HF transfer is made of teflon-lined carbon steel. New piping to be procured and installed for HF transfer is made of Kynar. An audible alarm will sound if the pH in the tank goes lower than pH 5.0. Kynar valves and flanges in the HF line are rated at 150 psi.

The air-operated solenoids which open/close the actuated ball valves controlling HF flow at the tank car and at the neutralization tank (SY-19-269B) use 80 psi air. The process water line solenoid is operated with 20 psi air. The design and installation of these solenoids is such that the solenoids will close their respective valves if their air supply is lost, i.e. they are fail-safe.

Neutralization tank venting

The neutralization tank has a 1400 gallon capacity and is equipped with an agitator. The neutralization reaction produces a calcium fluoride precipitate, carbon dioxide, and water. Bench scale testing performed in the FEMP Laboratory confirms that the proposed design will safely achieve the neutralization. The process is exothermic, so the rate of neutralization will be controlled to minimize heat generation and steam evolution.

Carbon dioxide is expected to be generated at a rate of 10 cfm. If carbon dioxide were to be released at four times this rate, or 40 cfm, a ventilation stack 20 feet long with a 6-inch diameter would allow escape of the evolving gases such that the pressure in the tank would not rise more than 0.1" H_2O above atmospheric pressure. This process vent will be installed on the neutralization tank to exhaust carbon dioxide produced during operation. This would prevent pressurization of the neutralization tank. In addition, any unexpected pressure can also be relieved through the overflow line which will drain into an overflow container which will drain into an overflow container if the liquid level in the tank exceeds two inches from the top of the tank. A scrubber was determined to be unnecessary on the tank vent based on the analysis by Foster Wheeler which showed that HF vapor being carried up in CO_2 bubbles in the neutralization tank would be adequately scrubbed by the slurry before the bubbles reached the liquid surface. The overflow and vent lines will be made of CPVC.

Neutralization tank level control

The neutralization tank level will be determined with dual redundant level probes inside CPVC piping, transmitters and indicators. Process water feed to the tank is regulated by a batch controller that is interlocked to the actuated solenoid valve on the water line. The level of process water in the tank can be verified with the level indicators before the lime and $CaCO_3$ are added. Dual relays in series can each de-energize the solenoid which would actuate the ball valve closed in the water line if the water level gets too high in the tank (about six inches from the top of the tank). HF flow cannot commence if the slurry level in the neutralization tank is too low -- the dual level relays in series each can prevent power to the HF transfer pump and the HF valve at the tank car if the level in the tank is too low (<2 ft above the bottom). HF flow will also be automatically stopped if the dual level probes indicate a pre-set high level. The tank level will normally be 6.5 inches from the top of the tank during processing. An audible high level alarm will alert the operator of an abnormally high level (2" below the top) in the tank and a strip chart recorder will allow the operator to monitor the level once the water goes higher than the low level sensor.

Neutralization tank pH control

The pH controllers are dual redundant components in series and will be calibrated daily. The probes are made of a teflon/CPVC or Ryton material which is compatible with HF. The HF transfer pump will shut off and the HF valve at the tank car will be closed when the pH reaches 6.0. An alarm will sound if pH goes down to 5.0. There is a strip chart recorder at the neutralization tank for secondary verification of the pH probes' control of the process. A sample port on the tank discharge line will allow for samples to be taken to also verify the tank slurry pH before it is pumped out of the neutralization tank.

Neutralization tank temperature control

Dual temperature probes inside stainless steel pipe wells in the tank provide redundant indications of the temperature in the tank. Dual redundant temperature controllers each will shut off the HF pump and close the HF valve at the tank car at 140°F. The temperature at which the temperature controllers shut off the HF flow was set with a safety factor below the maximum temperature allowed for the rubber tank lining (200°F) to account for non-homogeneous temperatures within the tank and for the time it takes the temperature limit controllers to actuate. This temperature limit will protect the integrity of the tank's rubber lining. The tank temperature is indicated through dual readouts on the control panel. A strip chart recorder will allow the operator to review the rate of temperature rise. An audible alarm will sound if the tank temperature exceeds 150°F to alert the operator of this abnormal condition. The agitator and tank baffles should provide a solution of uniform temperature.

Neutralization system control panel

A weather-tight, outdoor control panel will be located near the neutralization tank. The panel will have indicators for tank level, pH, temperature, and pressure. A 6-pen strip chart recorder will be installed to provide constant readouts of the dual readings of temperature, level and pH. An audible alarm at the panel will sound if the pH in the tank goes below 5, if the temperature goes above 150°F, or if the level reaches two inches from the top of the tank. The panel will have hand switches to turn the agitator on/off, to

open/close the HF valve at the neutralization tank, to stop the HF transfer pump, and will also contain the water batch controller and the selector switch for the lime feeder. The relay box, the strip chart recorder, and the temperature instruments will be in NEMA 4 enclosures.

HF system purging

A connection located upstream of the HF transfer pump between the pump and the tank car will allow a water source to be attached to the line to provide a means for flushing out the entire HF delivery system in case maintenance needs to be performed on HF-contaminated components. There are two hand operated check valves between this connection and the HF transfer line. Drains equipped with two check valves each will also be provided to drain out pipes, valves, and the HF transfer pump.

Plant 8 operation

The reacted slurry in the neutralization tank will be transferred out of the tank with an existing pump (P-9X-4000A) into portable containers and transported to Plant 8. At Plant 8 the slurry will be pumped into one of three existing 6,600-gallon sump tanks (D-104, D-105, or F-104), filtered with the large EIMCO filter, and drummed. Plant 8 Large EIMCO Filter Operations will be conducted according to SOP-08-C-602.[9] Wastewater from the neutralization process will be analyzed for radiological contamination, fluorides, and pH prior to being discharged from the Plant 8 wastewater treatment system to confirm that it does not exceed FEMP discharge limits. If the filtrate meets the discharge limits, it will be pumped to the General Sump, then to the Bio-Surge Lagoon and treated in the Advanced Waste Water Treatment Facility, and discharged to the Great Miami River. If the filtrate does not meet the discharge criteria it will be reprocessed in Plant 8. The solids are expected to be disposed of as Low Level Radioactive Waste (LLW) at the Nevada Test Site (NTS).

Tank car decontamination rinse

After all the HF as practical is removed from the tank car, the walls and bottom of the car will be pressure washed with water using a rotary sprayer head. The resulting rinse solution will be processed through the neutralization system. The tank car will be considered clean when samples of the rinseate are tested and found to have a pH greater than 4.7 and less than 9.0. The interior of the tank car will then be visually inspected for loose debris.

2.3.1 Operating Procedures

The *HF Neutralization System Operating Procedure 08-C-612* will be the primary source of safety information for the process. Cautions and warnings are included to prevent operators and maintainers from taking any actions which could expose themselves, other workers, the facility or mission to risk.

The *Project/Task Specific Health and Safety Plan*[10] and its Attachment A, the *Health and Safety Requirements Matrix* specify the health and safety procedures required for performing the closure activities. These documents will include personnel protective equipment requirements, entry and exit requirements, any exclusion areas, permit requirements, and personnel and equipment decontamination procedures. FERMCO Lock & Tag procedures per SSOP-0719 will be used during maintenance which affects the process facility or services, such as process air, water and power.

A Quality Assurance (QA) Plan prepared by QA and Project Management documents how the project meets the requirements of the FERMCO QA Program. It will be provided as part of the Readiness Assessment evaluation. Standing Orders being prepared by RSO and Project Management will commit the project to the administrative controls described in the ASA.

2.3.2 Emergency Procedures

FERMCO Procedure 20-C-606 *Hazardous Material Cleanup* and SSOP-0067 *Spill Incident Reporting and Cleanup* prepared by Emergency Preparedness will be followed for abnormal operating conditions which may arise during processing. Process operators, Emergency Response personnel, and nearby workers will be trained to be aware of emergency actions to take in case there is an HF release. The EOC will issue an Alert if a release results in an HF concentration greater than ERPG-1 (5 ppm) at the Tank Farm boundary, and a Site Area Emergency if the level exceeds ERPG-2 (20 ppm). Abnormal conditions may include:

- HF pump, lines, valves, or flanges leak, rupture, or are blocked
- HF pump stops operating due to high temperature or level
- Actuated valves fail open or closed
- Neutralization pump or agitator stops operating
- Site electrical power, process water, or process air is lost
- Neutralization tank overflows
- Neutralization tank is full with pH too low for Plant 8

2.3.3 Secondary Containment

The tank car secondary containment pit will contain any spills from the tank car, HF pump or HF piping over the pit. The pit volume is about 9,000 ft^3 (67,320 gal) and it is acid-resistant coated. The rest of the HF piping and the neutralization tank will have positive secondary containment as explained below.

The most likely release from the HF piping or the neutralization tank would drain into the AHF tanks diked area, or into catch basins and into the tank car pit -- this includes catch basins (CB) 168 and CB169 near the neutralization tank.[11] A short (6 ft ±) section of HF piping downstream of the HF pump is currently over an undiked area next to the pit. This small area will be dammed with bags of lime to contain any leaks from this section of pipe.

Two catch basins near the Tank Farm drain to the stormsewer system which flows to the Stormwater Retention Basin. These are CB221 at the northwest corner of the Tank Farm containment area and CB25 at the south end of the Tank Farm near 2nd Street. It is unlikely that a spill would reach either of these catch basins due to their distance from the process, but bags of lime will be placed to prevent a release from entering the stormsewer through them.

Secondary containment to the east of the neutralization tank is currently inadequate to contain a large spill or spray release from the tank or the HF piping leading to the tank. There is no curbing to the east of the tank, and the area six ft from the tank is gravel. Herculite sheeting similar to the material now around the HF dumpster will be placed on the ground on the east side of the Tank Farm to ensure secondary containment of this piping and the tank.

Any HF spills in the pit will be contained and neutralized in the pit since the sump pump (P-19X-1200) in the containment pit has no discharge route. Spill response supplies will be available in the immediate vicinity of the Tank Farm.

Lime will also be located close by to assure immediate response in the event of any spills or leaks of HF. The secondary containment pits and the Tank Farm area will be inspected before HF is pumped to verify that incompatible materials such as metal or glass are not in these areas.

2.3.4 Operating Personnel

The neutralization process will employ at least three full-time chemical operators, one supervisor, and part-time Rad Con Technicians, IH Technicians, laboratory analysts, sampling personnel, one vehicle operator, and QA inspectors.

2.3.5 Interfaces with other Facilities and Operations

Solids resulting from the neutralization process will be filtered out and drummed in Plant 8. The solids will be disposed of as Low Level Waste at the Nevada Test Site or will be stored as mixed waste on site. Neutralization process wastewater will be pumped to the Plant 8 wastewater treatment system, then to the General Sump, then treated in the BDN Facility, then discharged to the Great Miami River. The closest buildings are Building 12A about 20 m east of the neutralization tank and Building 4A about 70 m southeast of the tank car.

2.4 Inventory of Radioactive and Hazardous Materials

2.4.1 Radioactive Materials

Analysis of a sample of the HF taken from the tank car on December 8, 1993 showed the solution to have a total uranium concentration of 54.7 mg/ℓ.[12] The tank car contains about 4400 gallons (16,654 ℓ) of a 28.7% dilute hydrofluoric acid solution with a mass of 39,700 lb (18,007,920 g) and 0.699% U-235.

Weight uranium (U) = (54.7 mg/ℓ)(16,654 ℓ) / (1000 mg/g) = 911 g U = 2.01 lb U
Assuming 1% U-235 as a worst case:

Isotope	Isotopic %	Weight Isotope (g)	Specific Activity (Ci/g)	Activity (Ci)	40 CFR 302.4 RQ (Ci)	DOE-STD-1027 Cat 3 Threshold (g)
U-234	0.009	0.08	6.24E-03	4.99E-04	0.1	670
U-235	1.000	9.11	2.14E-06	1.95E-05	0.1	1,900,000
U-238	98.991	901.78	3.34E-07	3.01E-04	0.1	13,000,000

The above table shows the amounts of uranium in the tank car are below the Rqs listed in Appendix B to Table 302.4 of 40 CFR 302.4 and also below the Category 3 radionuclide threshold quantities listed in Attachment 1, Table A.1 of DOE-STD-1027-92.

2.4.2 Hazardous Materials

The mass of HF in the tank car is: 39,700 lb x 0.287 = 11,394 lb. This quantity of HF is above the Reportable Quantity for HF (100 lb) listed in Table 302.4 of 40 CFR 302.4. Dilute, liquid hydrogen fluoride is not listed in 29 CFR 1910.119, *Process Safety Management* nor is it listed in 40 CFR 355, *Emergency Planning and Notification*, so Process Safety Management is not required for this process.

2.5 Facility Classification

The facility is below the Category 3 threshold as listed in DOE-STD-1027-92. It is a non-nuclear facility since the uranium inventory is below the

Reportable Quantity (RQ) for radioactive materials listed in Appendix B of Table 302.4 of 40 CFR 302.4, and the HF quantity is above the RQ in Table 302.4 of 40 CFR 302.4. Therefore, DOE Order 5480.23[13] does not apply to this facility but DOE Order 5481.1B *Safety Analysis and Review System*[2] does apply.

3.0 Hazard Assessment

3.1 Hazards

Hazard identification was accomplished by performing three types of hazard analysis: Preliminary Hazard Analysis (PHA), Hazard & Operability Analysis (HAZOP), and Fault Tree Analysis (FTA). These analyses are included in the appendices and their results are summarized below.

3.1.1 PHA Results

An integrated Preliminary Hazard Analysis (PHA) was performed which addressed all potential hazards to the worker and the public during each phase of the closure project. The potential hazards evaluated are shown in Table 1. The hazards identified for each phase of the project are shown in Table 2. The hazards were evaluated further in Appendix A. The only potential hazard to workers or the public from a non-standard industrial hazard, i.e. those not controlled by OSHA standards, was HF exposure from a release of HF to the environment. HF could be released in the event that the integrity of components containing HF is breached by overpressure, hydrogen explosion, or thermal degradation. These components are the tank car and its liner, the HF diaphragm, valves, piping, or the neutralization tank and its liner.

ID #	Potential Hazard
1	Fire/Explosion
2	Caustic/Acidic
3	Toxic
4	Radioactive
5	Kinetic/Rotational
6	Potential/Elevation
7	Electrical
8	Thermal
9	Pressure Vessel
10	Loss of Containment
11	Confined Space
12	Human Factors

Table 1 - Potential Hazards

3.1.2 HAZOP Results

A Hazard and Operability (HAZOP) Analysis was performed to assess the potential for HF release and other hazards with the participation of an integrated Hazard Analysis Team consisting of Industrial Safety and Health,

Operation	Hazard ID #s from Table 1											
	1	2	3	4	5	6	7	8	9	10	11	12
Construction/installation of processing system	X	X	X	X	X	X	X				X	X
Testing of processing system					X	X	X		X		X	X
Addition of water to neutralization tank							X		X			X
Loading lime and $CaCO_3$ in lime house		X	X		X	X	X		X	X	X	X
Addition of lime and $CaCO_3$ to neutralization tank			X		X		X		X	X		X
Pumping HF into neutralization tank	X	X	X			X	X	X	X	X		X
Pumping neutralized slurry from neutralization tank				X	X	X	X			X		X
Transporting neutralized slurry to Plant 8					X	X	X			X		X
Storage and processing of neutralized slurry at Plant 8				X	X	X	X			X		X
Drumming and storage of neutralized solids						X	X			X		X
Maintenance of HF neutralization system - pumps, valves, neutralization tank components	X	X	X	X	X	X	X		X	X	X	X
Final decontamination and disposal of HF tank car		X	X		X	X	X			X	X	X

Table 2 Hazard Identification Matrix

000021

7018

Industrial Hygiene, System Safety, CRU-3 Engineering, RSO Process Engineering, DOE/MTC, Quality Assurance, Foster Wheeler Process Engineering, and Foster Wheeler Safety. The HAZOP results are included as Appendix B. Action items which were recommendations of the HAZOP were included in the *Installation Specifications and Requirements* and in the Operations and Maintenance Procedures and the Test Procedures.

3.1.3 Fault Tree Analysis

A qualitative FTA was conducted with a Top Event of "Inadvertent HF Flow". Its main benefit was to identify the system logic involving failures or other events which could lead to HF being inadvertently added to the neutralization tank. The FTA shows the probability of inadvertently adding HF to the tank to be incredible since at least seven hardware failures must occur concurrently for this event to occur. It is included in Appendix E.

3.1.4 Discussion of Hazards and Controls

Characteristics of HF

HF is a toxic, corrosive material and is RCRA-hazardous for corrosivity. It is a colorless, fuming liquid or gas with a strong, pungent, irritating odor. Its odor threshold range is 0.04-0.13 ppm. The WEMCO MSDS of 1/86 for 35% HF lists its boiling point as 248°F.[14] HF is not combustible and it is miscible in water in all proportions. It is incompatible with metals, concrete, glass, and ceramics. Its corrosive action on metals forms hydrogen gas to create an explosion hazard with an ignition source present. HF volatilizes from water solutions into the air space over such solutions. When HF is added to water it produces additional toxic HF vapors. HF is a noncarcinogen to human health. HF is extremely toxic to skin, eyes, and mucous membranes due to the fluoride component. Unlike other acids which act primarily on the skin or surface of contact, HF causes deep penetrating burns that may not be sensed until hours following exposure. HF penetrates to deeper tissues (especially bone), where the fluoride ion will bind with the tissue calcium resulting in severe tissue destruction.

The risk of workers being exposed to HF will be prevented by:

1. HF will be contained within the tank car, the piping, and the neutralization tank at all times during the process. Start-up testing will verify the containment integrity of the system.

2. Workers in the exclusion zone will be adequately protected from an accidental release of HF liquid or vapor by wearing the personal protective equipment required in the HASP.

3. The warning signs for very low exposure to HF include not only odor perception, but also tearing of eyes and irritation of the respiratory tract. These symptoms will warn workers of HF exposure at much lower concentrations than the PEL of 3 ppm.

Tank car implosion

During the neutralization process there is little chance of the tank car liner imploding due to the suction pressure of the transfer pump since the tank car will be sufficiently vented through a vent.

Hydrogen generation in the tank car

Since hydrogen gas is formed when HF contacts metal, a catastrophic explosion hazard exists if enough hydrogen gas is created to form an explosive atmosphere (4 - 75% by volume in air) and an ignition source is present. Moreover, an explosion of hydrogen gas could disperse a catastrophic amount of HF vapor both on and off site. The tank car vapor space has been monitored for hydrogen gas on two previous occasions: when the tank car contents was sampled in December 1993 and before the tank car was moved in April 1994. Both of these readings were 0%. The HASP requires the vapor space of the tank car to be monitored for hydrogen gas again before any operations occur.

Tank car structural integrity

Since the tank car is about 50 years old, there was concern during the recent tank car movement that the tank was not structurally able to withstand the stresses presented by the move. Visual and ultrasonic inspections of the tank car were performed by Engineering Support to discover any obvious defects in the tank material. No obvious defects were found, so it is not expected that the neutralization process will present structural safety hazards.[7] The tank car will not be moved during processing, and the tank cannot be overpressurized since it is vented, so no additional stresses are expected on the tank which could fail it. Monitoring of the tank vapor space for hydrogen may indicate if the liner has failed and that HF has corroded the steel tank.

Process heat generation

The neutralization process was designed by scaling up the stoichiometric excess determined from the bench scale treatability testing. The bench scale testing used an HF flow of 1 mℓ/min. This process design uses 1.7 gal/min (6,435 mℓ/min). Bench scale testing showed the neutralized slurry reached 106°F when the starting temperature of the solution was 68°F. FERMCO CRU-3 Process Engineering and Foster Wheeler Process Design Engineering are confident that the proposed process will act in the same way as in the bench scale testing and will produce a similar rise in temperature. Data from the manufacturer of the tank shows the rubber can safely withstand temperatures up to 200°F.

Adjacent operations

Since Building 12A is about 20 m from the neutralization tank and Building 4A is about 70 m away, the effects of an HF release on these facilities and operations were considered. If D&D operations are taking place in Building 4A, the workers in that facility must be aware of the possibility of an HF release, that the release may adversely affect them, and the proper emergency actions to take. Any release of HF will be communicated to the Emergency Response Center so nearby workers can be warned of the situation and advised of the appropriate safety response. The worst case potential accident would result in an HF concentration of 11.1 ppm at 100 m. This is acceptable according to WSRC-MS-92-206[15] which recommends a limit of ERPG-3 (50 ppm) on-site. The consequences and probability of this hazard are discussed further below in paragraph 3.2. Also, nearby operations could create a hazard to the HF processing system. If Plant 4 is using cranes or rigging operations, the plans for those operations will consider the effect of a crane or rigging failure on the HF tank car or piping. Likewise, the safety of the HF processing facility will be addressed when planning the explosive demolition of Plant 4. These requirements are included in the Plant 4 D&D Safety Assessment, SA 94-0025.

3.2 Consequences

Dispersion Analyses Summary and Discussion

Three potential bounding accidents were postulated for the neutralization process: (Case 1) HF pump/pipe flange connection failure, (Case 2) tank car failure, and (Case 3) a violent exothermic reaction in the neutralization tank due to adding neutralization solids to HF already in the tank. Case 1 was an elevated release of HF vapor and liquid under pressure from a leak in the flange at the HF pump/pipe interface. Case 2 was a release of the tank car's total contents due to loss of integrity of the tank rubber liner, corrosion of the tank steel from the reaction with HF, and structural failure of the tank. Case 3 resulted in heating the HF above its boiling point and off-gassing of HF vapors. Case 3 was determined to bound the potential magnitude of HF releases and exposures. The summary of that dispersion analysis is discussed below. The calculations for the accident analyses for all three cases are found in Appendix C.

Case 3 - Adding neutralization solids to HF in neutralization tank

Analysis Summary

This situation would result in the bounding accident of the three hypothesized. If HF is added out-of-sequence such that a 143-gal batch of HF is pumped into the neutralization tank, then water and/or neutralization solids are added to the HF in the tank, a violent exothermic reaction will result which would cause a pressurized release of HF vapor. It could result in downwind HF concentrations of 11.1 ppm at 100 m and 0.34 ppm off-site.

Discussion

Since Building 12A is only about 20 m away from the neutralization tank the concentration outside that building could theoretically be two or three times higher than the 11.1 ppm estimated at 100 m. The dispersion model is not accurate at distances less than 100 m. The plume from this release is very narrow, and there are no building entrances which are regularly used or ventilation intakes on the west end of the building within 100 meters. The concentration inside the building would be considerably lower than the hypothesized plume outside. Although pedestrian and vehicle traffic will be possible on 2nd and "B" streets near the Tank Farm, the probability of transitory personnel being near the Tank Farm during an accident are extremely remote.

The probability of this accident is very low since there are several preventive actions inhibiting its occurrence -- at least two human errors and three hardware failures must combine for this hazard to materialize into an accident. The design safety features, safety procedures, and mitigators listed below will control this risk adequately to protect other workers within 100 m not associated with the process:

1. The neutralization tank has dual redundant low level sensors connected in series to both the HF pump and the solenoid-actuated HF valve at the tank car, each of which prohibit addition of HF if the level in the tank is too low. These controls will not allow the pump to start or the valve to open if the calculated volumes of water and neutralization solids are not already in the tank.

2. The neutralization tank has dual redundant pH sensors and controllers connected in series to both the HF pump and the HF valve. If the pH is too low (< 6), each of these controllers removes power to the HF pump and closes the solenoid-actuated HF valve. The pH probes will be calibrated daily.

3. The neutralization tank has dual redundant temperature bulbs and transmitters connected in series to the HF pump and the HF valve, each of which will remove power to the HF pump and close the HF valve if the temperature goes over 140°F. This over-temperature circuit will be tested for continuity before processing begins. A high temperature alarm will also sound if the tank temperature goes over 150°F.

4. Dual temperature, pH and level indicators and a pressure indicator at the control panel near the neutralization tank will alert the operator of abnormal conditions in the tank. An HF pump emergency stop switch at the neutralization tank will allow the HF transfer pump to be stopped quickly.

5. Warnings in the Operations Procedure will alert operators to verify the HF pump switch is OFF when the batch process begins. Procedures guide operators to verify the correct pH and level in the tank during all steps of the processing.

6. The HF pump must be manually switched ON -- it cannot re-start automatically after being shut off for any reason.

7. Workers within 100 m will be warned of HF pumping operations and the necessary actions to take in the event of an emergency. Work groups will be in radio contact with the HF operators through the AEDO.

3.3 Hazard Classification

3.3.1 Exposure Guidelines

HF exposure limits according to 1994 National Institute for Occupational Safety and Health (NIOSH) guidelines are:

Permissible Exposure Limit (PEL) = 3 ppm, 8 hour Time Weighted Average (TWA)
Immediately Dangerous to Life or Health (IDLH) = 30 ppm, 30 min escape

An American Industrial Hygiene Association (AIHA) technical committee develops Emergency Response Planning Guidelines (ERPG) for use in evaluating the effects of accidental chemical releases on the general public. The current HF ERPG values and definitions are:

ERPG-1 = 5 ppm = The maximum airborne concentration below which nearly all individuals could be exposed for up to one hour without experiencing or developing health effects more severe than mild odor perception or irritation.

ERPG-2 = 20 ppm = The maximum airborne concentration below which nearly all individuals could be exposed for up to one hour without experiencing or developing irreversible or other serious adverse health effects or symptoms which could impair an individual's ability to take protective action.

ERPG-3 = 50 ppm = The maximum airborne concentration below which nearly all individuals could be exposed for up to one hour without experiencing or developing life-threatening health effects.

No approved DOE guidance exists for hazard classification from toxicological effects. There are two other sources of information available for hazard classification. They are WEMCO SP-A-01-013[16] and WSRC-MS-92-206.

Attachment D of WEMCO SP-A-01-013 lists hazard classifications for chemical exposures based on the chemical's TLV-TWA and IDLH values. It is the existing FERMCO guidance for hazard classification for chemical exposures.

WSRC-MS-92-206 presents more recent recommendations of a subcommittee of the Westinghouse Management and Operation Nuclear Facility Safety Committee regarding chemical concentration limit guidelines for use in hazard classification of facilities per DOE Order 5481.1B and hazard classification of facilities or operations according to DOE Order 5480.23. Five DOE facilities are represented on this subcommittee. This reference uses the AIHA ERPG values to classify hazards. Figure 4 below shows these hazard classification guidances, and both will be considered in classifying the hazards presented by this project.

Proposed DOE-STD-3005, *Evaluation Guidelines for Accident Analysis and Safety Structures, Systems, and Components*[17] states in paragraph 4.3.1 that for internal manmade accidents, individual Evaluation Basis Accidents shall not cause dosages to the Maximally-exposed Offsite Individual in excess of the ERPG-2 dosage, and at the Onsite Evaluation Point in excess of ERPG-3 dosage.

Figure 4 - Hazard Classification Guidance

Hazard Class	On-Site WEMCO	On-Site WSRC	Off-Site WEMCO	Off-Site WSRC
High	C > 5 x IDLH	----	C > IDLH	C ≥ ERPG-3
Moderate	IDLH < C ≤ 5 x IDLH	C ≥ ERPG-3	PEL < C ≤ IDLH	ERPG-2 ≤ C < ERPG-3
Low	C ≤ IDLH	ERPG-2 ≤ C < ERPG-3	C ≤ PEL	ERPG-1 ≤ C < ERPG-2

C = HF concentration, ppm
WEMCO = WEMCO SP-A-01-013, Attachment D
WSRC = WSRC-MS-92-206, Table 1

3.3.2 Comparison with Exposure Guidelines

The exposures from this potential accident are classified according to the hazard classification criteria in Figure 4 above and Draft DOE-STD-3005. These hazard classifications are:

Reference	On-site	Off-site
WEMCO SP-A-01-013	Low	Low
WSRC-MS-92-206	< Low	< Low

The exposures from the worst case accident cited are Low Hazards according to the hazard classification criteria of WEMCO SP-A-01-013 and WSRC-MS-92-206, present minor on-site and negligible off-site impacts to people and the environment according to DOE Order 5481.1B, and are in compliance with proposed DOE-STD-3005.

4.0 Conclusions

4.1 Facility Hazard Classification

The HF neutralization process facility is classified as a non-nuclear facility since the radioactive inventory is below the RQ listed in Appendix B to Table 302.4 of 40 CFR 302.4, and the hazardous material inventory is above the RQ listed in Table 302.4 of 40 CFR 302.4. The facility is further classified as a Low Hazard according to the chemical hazard classification criteria of WEMCO SP-A-01-013 and WSRC-MS-92-206. This classification resulted from the inventory of radioactive and hazardous materials used in the process, the comprehensive identification of hazards from the integrated Preliminary Hazard Analysis and Hazard & Operability Analysis, and the analysis of the effects of the bounding scenario for HF release on workers and the off-site public. While workers using Building 12A, Building 4A and 2nd and "B" Streets could be exposed to a Low hazard if there is an HF release, the Tank Farm exclusion zone and emergency response actions will be adequate to protect workers if an HF release occurs.

4.2 Safety Documentation

This Auditable Safety Analysis (ASA) serves as the safety analysis documentation required by DOE-EM-STD-5502-94 and DOE Order 5481.1B. A Readiness Assessment (RA) will be conducted for this operation in accordance with SM-0005, *FERMCO Operational Readiness Manual*, as a best management practice. The *Project Specific Health & Safety Plan (HASP)* and the *Health and Safety Requirements Matrix* describe all worker safety requirements applicable to the neutralization process and facility including required work permits, air monitoring and personal protective equipment. Recommendations have been made to the Operating Procedure RSO 08-C-612, and will be made to the Test Procedures and Training Manuals.

Although Process Safety Management is not required, together this ASA, the PHA, HAZOP, FTA, HASP, RA, Start-up testing, Quality Assurance Plan, HF Project internal readiness checklist, adherence to Operations and Maintenance Procedures, Training and Qualification of personnel, Conduct of Operations program, Emergency Response Plans, and the Conceptual System Implementation Plan incorporate the appropriate elements, principles and requirements of Process Safety Management.

5. References

1. **U. S. Department of Energy:** *DOE Limited Standard Hazard Baseline Documentation, DOE-EM-STD-5502-94*, August 1994.

2. **U. S. Department of Energy:** *DOE Order 5481.1B, Safety Analysis and Review System*, 9/23/86.

3. **FERMCO:** *The HF Tank Car Closure Plan Information and Data (CPID)*, Revision 2, July 1994.

4. **U. S. Department of Energy:** *DOE Standard DOE-STD-1027-92, Hazard Categorization and Accident Analysis Techniques for Compliance with DOE Order 5480.23, Nuclear Safety Analysis Reports*, December 1992.

5. **U. S. Environmental Protection Agency:** *40 CFR 302, Designation, Reportable Quantities, and Notification.*

6. **U. S. Department of Labor:** 29 CFR 1910.119, *Process Safety Management of highly hazardous chemicals.*

7. **U. S. Environmental Protection Agency:** *40 CFR 355, Emergency Planning and Notification.*

8. **FERMCO Engineering Support:** *HF Neutralization System Installation Specifications and Requirements*, March 15, 1995.

9. **Foster Wheeler:** *Conceptual System Implementation Plan*, November 1994.

10. **FERMCO:** *SOP-08-C-602, Large EIMCO Filter Operation - Plant 8 Wastewater Processing System.*

11. **FERMCO:** *CRU-3 Project Specific Health & Safety Plan for the HF Neutralization Project*, November 1994.

12. **FERMCO:** *Engineering Drawing #22C-5500-P-00670, Grid II -- Underground Utilities -- Bldgs. 12, 24 and Tank Farm*, Revision 5, 9/28/93.

13. **U. S. Department of Energy:** *Bench Scale Treatability Testing of HF Tank Car Wastes*, July 1994.

14. **U. S. Department of Energy:** DOE Order 5480.23, *Nuclear Safety Analysis Reports*, April 30, 1992.

15. **WEMCO:** *Material Safety Data Sheet, HF 35% Solution*, January 1986.

16. **Westinghouse Management & Operation Nuclear Facility Safety Committee:** *WSRC-MS-92-206, Toxic Chemical Hazard Classification and Risk Acceptance Guidelines for Use in DOE Facilities*, Revision 1, April 1993.

17. **Westinghouse:** *WEMCO SP-A-01-013, Preparation of Safety Assessments*, 9/16/92.

18. **U. S. Department of Energy:** *Proposed DOE-STD-3005, Evaluation Guidelines for Accident Analysis and Safety Structures, Systems, and Components*, 2/25/94.

19. **Allied Signal:** *Fact Sheet for HF.*

20. **U. S. Department of Energy - Jofu Mishima:** *Draft DOE-HDBK-0013-93, Recommended Values and Technical Bases for Airborne Release Fractions, Airborne Release Rates, and Respirable Fractions at DOE Non-Reactor Nuclear Facilities*, July 1993.

21. **Bird, R. B., W. E. Stewart and E. N. Lightfoot:** *Transport Phenomena*. John Wiley & Sons, (1960).

22. **Turner, D. Bruce:** *Workbook of Atmospheric Dispersion Models*. EPA, 1970.

23. **U. S. Air Resources Laboratories:** *TID-24190, Meteorology and Atomic Energy*, Wash D.C., pages 102-103, (July 1968).

24. **U. S. Nuclear Regulatory Commission:** *NUREG-1320, Nuclear Fuel Cycle Facility Accident Analysis Handbook*, 1988.

7018

Appendix A

HF Tank Car Closure

Preliminary Hazard Analysis

1. Purpose - Identify all potential hazards to the HF neutralization process worker, other site workers, the off-site public, property, and the environment. Determine causes and worst case consequences of the potential hazards. Recommend mitigating actions to reduce the risk of the hazards to acceptable levels. Document the status of the recommended mitigating actions.

2. Methodology - The types of hazards shown below in Table 1 were the hazards of interest. Each hazard type was assigned an identification number (ID #). The HF neutralization project was broken down into 12 separate operations. Note: Dismantling the HF neutralization system is not in the scope of this project. Each of these separate operations was evaluated to determine if the types of hazards shown in Table 1 were possible during the operation. An "X" was placed in Table 2 to show the hazard types needing further evaluation. These hazards were then described in more detail using the hazard table format categories of Hazard, Cause, Consequences, Mitigation, and Status.

3. Results - The results of the PHA are shown in the following pages.

4. Conclusions - The PHA Mitigating Actions have been satisfied as shown in the Status column of the hazard table. All of the hazards will have been acceptably addressed by the Project Specific Health & Safety Plan, the hazard matrix identifying required Work Permits and PPE requirements, the HAZOP, the Safety Assessment with accident dispersion calculations, the Neutralization Process Operating and Maintenance Procedures, and the Installation Specifications and Requirements.

Table 1 Potential Hazards

ID #	Potential Hazard
1	Fire/Explosion
2	Caustic/Acidic
3	Toxic
4	Radioactive
5	Kinetic/Rotational
6	Potential/Elevation
7	Electrical
8	Thermal
9	Pressure Vessel
10	Spill/Loss of Containment
11	Confined Space
12	Human Factors

Table 2 Hazard Identification Matrix

Operation	Hazard ID #s from Table 1											
	1	2	3	4	5	6	7	8	9	10	11	12
Construction/installation of processing system		X	X	X	X	X	X					X
Testing of processing system					X	X	X		X			X
Addition of water to neutralization tank							X		X			X
Loading lime and $CaCO_3$ in lime house			X		X	X			X	X	X	X
Addition of lime and $CaCO_3$ to neutralization tank			X		X					X		X
Pumping HF into neutralization tank	X	X	X					X	X	X		X
Pumping neutralized slurry from neutralization tank						X	X			X		X
Transporting neutralized slurry to Plant 8					X	X	X			X		X
Storage and processing of neutralized slurry at Plant 8				X		X				X		X
Drumming and storage of neutralized solids						X	X			X		X
Maintenance of HF neutralization system - pumps, valves, neutralization tank components		X	X		X	X	X		X	X		X
Final decontamination and disposal of HF tank car		X	X		X	X	X			X		X

000031

2018

Construction/installation of processing system

Hazard	Cause	Consequences	Mitigation	Status
Toxic HF vapor	HF vapor may escape from tank car while attaching pipe to tank car dip tube	Personnel overexposure to HF via inhalation	1.1 PPE 1.2 Exclusion zone around work area 1.3 IH monitoring in work area	1.1, 1.3 In HASP 1.2 The exclusion zone is shown in Figure 2 on p. 4
Rotating power tools and pump shafts	Inattention or lack of training by operator, lack of guarding on rotating pump shafts	Serious personnel injury	1. Caution around rotating equipment 2. Training 3. OSHA-approved guards around shafts	1, 2, 3. Training and OSHA compliance
Work on elevated surface	Slip/trip/fall accident; inattention around containment pit or on elevated platforms	Serious personnel injury	1. Railings around elevated work areas in compliance with OSHA 2. Worker training	1. Railings are in place 2. Training To Be Provided (TBP)
Worker exposure to lightning	Workers on elevated metal platform during electrical storm	Severe worker injury or death	Suspend work on elevated metal catwalk when electrical storm is within 10 miles	HASP will preclude work under lightning conditions. SPR 4-41 Lightning Protection and NFPA 78 (Appendix B) will be followed for installation.
Electrical power over 30 volts	Exposure to non-insulated electrical tools, electricity in wet locations	Death, serious personnel injury	1. Use insulated tools 2. GFCIs in wet locations 3. Worker training	1, 2. HASP requires GFCI for electrical power tools 3. Training TBP
Storage of combustibles near ignition sources	Improper storage of combustibles and use of heat, spark and flame producing equipment	Fire	Welding, Hot Work Permit, Training	Fire protection and permits are addressed in the HASP. Training will be provided.
Hazardous atmosphere of confined space	Workers need to enter confined space of neutralization tank for construction	Exposure to toxic atmosphere	Confined Space Permit and Training, PPE	HASP
Extreme hot or cold environments	Heat from PPE, cold weather, inadequate work area design	Frostbite, heat stress	1. Caution about heat/cold stress 2. Design of job/PPE for the worker	1, 2. HASP

000032

7018

Testing of processing system

Hazard	Cause	Consequences	Mitigation	Status
High pressure fluid in pipes, valves and pumps	Failure of components during testing with workers nearby	Serious personnel injury	Require remote testing in Test Plans & Procedures	Test Plans & Procedures to be developed by RSO
Rotating pump shafts	Proximity and carelessness, lack of guarding	Serious personnel injury	1. Require remote testing and caution around pumps during testing 2. OSHA-approved guards around shafts	1. Test procedures 2. OSHA compliance
Work on elevated surfaces, electrical power over 30 v	Same as above for Construction phase			
Hazardous atmosphere of confined space	Need to enter tank during testing	Exposure to toxic atmosphere	Confined Space Permit, Training, PPE	HASP
Inadvertent operation of any high energy equipment with personnel nearby	Inadequate design of controls and indicators with respect to human factors	Serious personnel injury	1. Design controls for ease of operation and operator understanding 2. Lockout/tagout, training	1. System Spec and Operating Procedures 2. HASP- Site Energy Control Training, Lockout/Tagout

Addition of water to neutralization tank

Hazard	Cause	Consequences	Mitigation	Status
Exposure to electricity while operating water addition system	Ungrounded circuit, lack of GFCI, short circuit	Electrocution, loss of life	Grounded circuits, GFCI, training, qualified electricians	HASP, Training & Qualification of workers, Operating Procedures
Exposure to high pressure water	Failure of pipe, flange or other components	A secondary accident	1. Testing of system 2. Design integrity of components	1. Remote testing of system 2. System Spec
Operator inadvertently sets water controller too high	Inadequate indicator or control design	Spill of water/dilute slurry onto ground	1. Tank level controls 2. Time limit for pumping water	Dual level probes shut off water with high tank level

000033

2018

Loading lime and calcium carbonate in lime house

Hazard	Cause	Consequences	Mitigation	Status
Toxic, caustic lime/$CaCO_3$ dust	1. Bags break due to improper manual handling 2. Dust from sawing operation on bag	Minor irritant	1. Enclosed bag splitter with exhaust 2. Training on bag loading technique 3. PPE and IH monitoring in HASP	1. Bag splitter is enclosed and exhausted (check exhaust exit) 2. Training to be provided 3. In HASP
Forklift operation	Operator/worker error or inattention	Personnel injury or equipment damage	1. Place concrete parking curb to prevent forklift from hitting lime house 2. Trained and Qualified operators 3. Audible movement alarm on forklift	1. Curb would unnecessarily limit operations 2. Trained/Qualified operators to be provided 3. Backwards forklift movement alarm required in HASP
Scissor lift in lime house	Worker inattention	Severe personnel injury	Automatic stop on lift if obstruction detected under lift	OSHA compliance
Manual lifting, carrying, and loading bags	Improperly designed lifting operation	Personnel injury	Design operation for proper lifting, minimize weight and twisting, train for proper lifting techniques, rotate workers	HASP
Tripping hazard	Electrical conduit sticking up through lime house floor	Personnel injury	Remove/relocate electrical conduit	OSHA compliance requires removal of tripping hazards
Elevated lime house platform	Worker inattention and unprotected elevated working surface	Serious personnel injury	OSHA-approved railing across platform exposure, worker training	Railing in place, training to be provided
Bag splitter saw	Bag splitter door open during saw operation, operator error	Serious personnel injury	1. Interlock bag splitter door and saw so saw cannot operate with door open 2. Operator training	1. Interlock in design - verify in field 2. Training to be provided
Electrical-conducting parts of machinery not grounded	Lack of grounding, short circuit	Personnel injury, secondary accident	Ground/bond all current-carrying parts of machinery	OSHA compliance, HASP

000034

2018

Loading lime and calcium carbonate in lime house

Hazard	Cause	Consequences	Mitigation	Status
Incorrect neutralization solution in tank	Incorrect number of bags of lime or $CaCO_3$ loaded into system due to human error	Personnel error	1. Training 2. Load the correct number of bags into the lime house with the forklift so workers loading bags don't have to count them	1. Training to be provided 2. In Procedures
HF vapors or excess CO_2 in lime house	High CO_2 production or excess HF vapors in neutralization tank	Personnel overexposure to HF or oxygen-deficient atmosphere in lime house	1. Provide adequate CO_2 vent line from neutralization tank 2. IH will monitor for HF and CO_2 before entry of workers into lime house	1. In design 2. HASP

Addition of lime and $CaCO_3$ to neutralization tank

Hazard	Cause	Consequences	Mitigation	Status
Incorrect neutralization solution in tank	Failure of screw conveyor to transport solids to tank	HF added to water in tank causes splashing and HF vapors out of tank	1. pH control of neutralization tank 2. Check pH in tank before adding HF 3. Verify no solids build-up in hopper	1. In Design 2, 3. In Procedures
Electrical conductivity of screw conveyor	Ungrounded circuits on conveyor	Electrocution	Grounded circuits	OSHA compliance, HASP
Operating screw conveyor	Maintaining system while it is under power, such as unblocking jammed solids in the screw	Serious personnel injury	Lockout/tagout power during maintenance of system	HASP, Procedures. The screw conveyor is guarded by the duct during normal operation, but if it got jammed with solids workers may try to remove the blockage without de-energizing the screw.
Spill of solids during addition	Hopper or pipe overflows due to obstruction in pipe	Spill, dust in lime house	Observe solids loading to detect blockage during loading	Procedures

000035

7018

Pumping HF into neutralization tank

Hazard	Cause	Consequences	Mitigation	Status
Uncontained HF liquid or vapor	Loss of system containment due to failure of tank car, neutralization tank, pump, pipe, flanges, valves or controls	Personnel exposure to HF vapor or liquid release	1. Perform Hazard and Operability Analysis of HF system 2. Perform dispersion analyses of potential accident cases 3. PPE, training	1. Completed as Appendix B of Safety Assessment 2. Included in Safety Assessment 3. HASP
HF liquid in storm sewer system	HF liquid release and spill not contained	HF liquid corrodes metal storm sewer pipes, contaminates retention basin with HF	1. Determine destination of Tank Farm dike and containment pit catch basins and sumps 2. Prevent HF spill from entering storm sewer by diking around catch basins	1. Verified by Engrg Drawing[23] 2. Diking to be added
Hydrogen gas in confined space	HF contact with metal	Explosive hydrogen atmosphere and ignition source causes explosion and HF release	Provide containment system compatible with HF - pipes and tanks	Neutralization tank is rubber-lined, all HF system components are HF compatible except storm sewer pipes
Neutralization tank overheats	Unexpectedly high reaction rate	1. HF vapors released from tank 2. Tank rubber liner fails 3. Worker touches hot tank surface	1. Design process volume and HF addition rate based on heat of reaction of HF with neutralization solids 2. Provide dual temp sensors, interlock back to HF transfer pump, and high temp alarm	1. FERMCO and FW Process Engrg are confident that the temperature rise from the process will be the same as for the bench scale tests 2. Dual temp probes w/high temp alarm and shutoff provided 3. Tank has insulation jacket

000036

7018

Pumping HF into neutralization tank

Hazard	Cause	Consequences	Mitigation	Status
Overpressure of HF transfer pump, piping, flanges, valves, or tank	Pump runaway, excess reaction in tank	System component failure, HF release	1. Pump overpressure recycle 2. Tank overpressure relief 3. Design flanges and pipes above max pump pressure 4. Pre-op system test 5. Test at 150% of max pump pressure	1. Pump overpressure feature provides recycle at 50 psi. 2. Tank is vented 3. Pipe & flanges rated at 150 psi 4. System to be tested at 150% of 75 psi = 113 psi.
HF spill/loss of containment	System rupture due to overpressure, contact	Personnel overexposure to HF	1. Pre-op system test 2. Periodically inspect for leaks 3. Provide secondary containment 4. Require PPE 5. Plan and design Plant 4 D&D operations with the safety of the HF system and personnel in mind, i.e. crane and explosive operations	1. System will be tested 2. Workers will inspect for leaks during HF pumping 3. Secondary containment to be provided 4. PPE defined in HASP 5. Plt 4 D&D SA 94-0025 addresses this
Working and walking on elevated surface	Slip, trip or fall due to need to use catwalks, possibly slippery with ice	Worker falls from height, severe injury	1. Railings on catwalk 2. Suspend operations during inclement weather	1. OSHA compliance 2. Project Mgt decision to suspend operations in cold weather
Electrical power over 30 v	Power to pumps and valves	Electrocution	Grounding, GFCI, training	HASP, Operations
Worker struck by lightning	See same hazard during construction on page 24			
Operator incapable of understanding or using HF transfer pump controls or displays properly	Too much input or output required from operator, improper location of indicators and controls, procedures hard to understand, lack of training	Too much HF pumped into tank	1. Provide automatic pH, high level and high temperature controls 2. Provide training 3. Label equipment, displays, and controls consistent with procedures and drawings	1. Automatic controls defined in Spec 2. Training to be provided 3. Labels to be provided

000037

7018

Pumping neutralized slurry from neutralization tank

Hazard	Cause	Consequences	Mitigation	Status
Elevated surface of truck/trailer	Worker inattention or slip/trip/fall from height of trailer	Worker hurt, tank ruptures	1. Provide stable platform for tanks on truck/trailer 2. Worker training	1. Truck/trailer design TBD 2. Training to be provided
Pump shaft rotation and electrical power	Worker in wet location near pump while pump under power, open/short circuit	Worker electrocution and/or secondary accident; injury from rotating shaft	1. Pump correct wiring, GFCI, guard around rotating shaft 2. Training	1. HASP, OSHA compliance 2. Training to be provided
Spill of neutralized slurry	Loss of containment of tank, transfer hose, transfer tanks	Need to cleanup spill, worker exposure to radioactive contamination from slurry	1. PPE 2. Contingency procedures	1. PPE in HASP 2. Procedures to be provided
Operator fails to operate pump-out system correctly due to human factors problems	Lack of adequate controls, displays, labels, procedures	1. HF pumped into tank after starting to pump out slurry. 2. Slurry pumped out before neutralization complete, slurry spilled onto ground	1. Require manual start of HF transfer pump 2. Procedures/training to require operator to verify HF transfer pump is OFF before starting neut pump, and require pH sample before pump-out 3. Provide adequate controls, displays, labels 4. Provide adequate lighting in the Tank Farm area for low light during winter	1. Manual start required 2. pH sample of neutralized slurry required in operating procedures. 3. Labels to be provided 4. Open

Transporting neutralized slurry to Plant 8

Hazard	Cause	Consequences	Mitigation	Status
Truck/trailer operation	Operator inattention	Slurry spilled, operator injury	Driver training and qualification	Training and qualification to be required
Portable agitator rotating blades	Lack of training, carelessness	Worker injury	Training	Training TBP

000038

2018

Storage and processing of neutralized slurry at Plant 8

Hazard	Cause	Consequences	Mitigation	Status
Radioactively contaminated uranium	Proximity to uranium from neutralized slurry or other material being processed at Plant 8, spill	Personnel exposure to toxic and radioactive material	1. PPE and RWP 2. Procedures	1. PPE/RWP in HASP 2. Plant 8 SOP for Large EIMCO Filter
Loss of containment of neutralized slurry	Leak or rupture or process equipment	Need to clean-up spill, wet walking surface	1. Verify integrity of equipment 2. Label valves consistent with procedures 3. Secondary containment & sumps	1, 2. Per Plant 8 SOP 3. Plant 8 has diking and sumps
Electrically powered pump or rotating pump shaft	Proximity, wet location	Electrocution, injury from rotating pump shaft	Grounding, GFCI, guard on pump shaft	HASP, OSHA compliance
Reaction of another material with neutralized slurry	Incorrect processing steps, incorrect valves opened/closed	Reaction or contamination of neutralized slurry	1. Follow Plant 8 SOPs 2. Provide training	1. SOPs in place 2. Training to be provided

Drumming and storage of neutralized solids

Hazard	Cause	Consequences	Mitigation	Status
Criticality involving solid storage	Critical mass storage	Criticality	None	Enrichment is 0.699% U-235 and total uranium concentration is 54.7 mg/ℓ so solids are not mass limited. Hazard is incredible.
Fluoride dust	Uncontained drumming operation	Personnel overexposure to hazardous constituents of solids	1. Provide dust collection 2. PPE	1. Material will be drummed wet -- no dust 2. PPE in HASP
Manual handling of heavy drums	Lack of mechanical MHE	Worker injury	Provide mechanical MHE	To be provided

000039

7018

Maintenance of HF neutralization system - transfer pump, valves, neutralization tank components				
Hazard	**Cause**	**Consequences**	**Mitigation**	**Status**
Toxic, radioactive, high pressure HF fluid/vapor	Need to open up system for repair	Worker overexposure to HF, radioactively contaminated solution	1. Require system to be de-pressurized and purged with water before maintenance 2. IH monitoring for HF and rad before and during maintenance 3. Have decontamination material on hand during maintenance	1. Purge capability in design, purging to be required by procedures 2. IH monitoring required in HASP 3. Decon material to be provided
Explosive H_2 atmosphere	H_2 produced by reaction of HF with metal and ignition source present	Loss of life	Purge system with water, monitor for H_2 before and during maintenance	Purging in procedures, IH to monitor for H_2
Work at elevated surface while maintaining equipment	Need to repair HF transfer pump or pipes, slippery surface	Worker falls from height	Provide stable work platform with railings around equipment	HASP and OSHA compliance
Work in confined space with hazardous atmosphere	Need to enter neutralization tank for maintenance	Exposure to toxic atmosphere - severe injury	Confined Space Permit, purge tank with water and air before maintenance	Permit required by HASP, purging in maintenance procedures
Electrical power over 30 v	Use of electrical power equipment in wet environment	Worker electrocution and/or secondary accident	Provide GFCI in Tank Farm for maintenance	Required by HASP

000040

7018

Final decontamination and disposal of HF tank car

Hazard	Cause	Consequences	Mitigation	Status
Rinse water contaminated with HF	Leak or splash of liquid during rinse out of tank car	Severe personnel injury	Safe procedures and PPE	Procedures to be provided, PPE required in HASP
Manual lifting heavy objects during D&D of tank car	Need to move heavy pieces of tank car material	Personnel injury	Provide mechanical MHE and use correct procedures	HASP and OSHA compliance
Asbestos in tank car liner	Asbestos in tank car needs to be removed and disposed of properly	Skin contact and breathing of asbestos material	Safe handling practices and PPE	Verify location and quantity of asbestos in tank car
Tank car confined space	Need to enter tank car	Severe injury	Confined space entry permit, training	HASP prohibits entry into tank car
Power equipment	Size reduction equipment being used for D&D	Personnel injury	Safe procedures and training	HASP and OSHA compliance

000041

7018

Appendix B

HF Neutralization Process

Hazard & Operability Analysis (HAZOP)

1. Purpose - To identify potential hazards to the HF neutralization process worker, other site workers, the off-site public, property, and the environment. Recommend corrective actions to mitigate the risks of the identified hazards to acceptable levels. Report on the status of the recommended corrective actions.

2. Methodology - The HAZOP method of hazard analysis was performed using guide words and process parameters applicable to the HF neutralization process. The hazard severities and frequencies were categorized according to Tables 3 and 4 below which follow the guidance of DOE-STD-3009 and are consistent with other hazard analyses being developed (UNH and OU4 Pilot Plant). A team of personnel was assigned to the HAZOP Team by the DEC Team Project Manager. The HAZOP was performed over several meetings with the team members and via telecon with Foster Wheeler personnel. The HAZOP team consisted of:

Ron Bartos, Leader, System Safety
John Lippitt, Program Manager
Rick Maurer, RSO Occupational Safety & Health
Tim Arnold, RSO Process Engineer
Joe Patton, CRU-3 Process Engineer
Don Beheler, CRU-3 Environmental Engineer
Roger Grant, Industrial Hygienist
Tina Trenkler, Foster Wheeler Safety Engineer
Dave Johnson, Foster Wheeler Process Engineer
Jack Zimmerman, MTC Safety Analyst

3. Results - The HAZOP results are shown in the tables on the following pages.

4. Conclusions - The status of each of the recommended corrective actions is shown in the Status column of the HAZOP tables. Open action items were resolved by making changes to the Installation Specifications and Requirements Document, the Conceptual System Implementation Plan, the Project Specific Health & Safety Plan, the Quality Assurance Plan, the HF Neutralization System Operating Procedure #08-C-612, the Test and Start-up Plan, and the Training Plan.

Table 3 Hazard Severity Classification

Severity	Worker Safety	Worker Chemical Exposure	Public Chemical Exposure	Public Safety
High		ERPG-3	ERPG-2	Hospitalization
Moderate	1 fatality or ≥ 5 hospitalizations	ERPG-2	ERPG-1	Minor injury
Low	≥ 1 but < 5 hospitalizations	ERPG-1	PEL-TWA	
Below Concern	Minor injuries	PEL-TWA	EPA limit on normal emissions	

For Hydrofluoric Acid:

ERPG-3 = 50 ppm
ERPG-2 = 20 ppm
ERPG-1 = 5 ppm
PEL-TWA = 3 ppm

Table 4 Risk Assessment Matrix

Frequency → Severity ↓	A - Anticipated $\lambda \geq 0.1/yr$	B - Unlikely $0.1/yr > \lambda \geq 1E\text{-}04/yr$	C - Extremely Unlikely $1E\text{-}04/yr > \lambda \geq 1E\text{-}06/yr$	D - Incredible $\lambda < 1E\text{-}06/yr$
I - High	1	2	4	9
II - Moderate	3	5	6	13
III - Low	7	8	12	15
IV - Below Concern	10	11	14	16

Hazard Risk Index	Criteria
1 - 3	Unacceptable, Safety Significant
4 - 8	Undesireable
9 - 16	Acceptable with review

λ = frequency rate, events per year

HF Tank Car

Deviation	Cause	Consequence	Hazard	Risk	Action	Status
No containment	1. Tank car failure - corrosion or defect induced during processing 2. Tank car liner failure 3. Tank car overpressure 4. Natural Phenomena Hazard (NPH) - high wind, tornado, earthquake	1. HF vapor/liquid release 2. Liner failure results in H_2 production and explosion 3,4. Tank failure causes HF vapor/liquid release	1,2, 3,4 Personnel exposure to HF liquid and vapor 2 Workers exposed to explosion resulting in severe injury/death	1. IIC-6 2. IC-4 3. IID-13 4. IIC-6	1. Verify tank car integrity 2. Verify liner integrity 3. Verify tank is vented 4. Assess probability of NPH hazard 1-4: 5. Emergency spill preparedness 6. Define and have available proper PPE 7. Define exclusion zone around process 8. Secondary containment capability for HF tank car - acid resistant pit coating. Verify that spill into catch basins will not flow to SWRB.	1. Tank integrity verified w/ ultrasound tests 10/92 2. No leaks have occurred. Liner integrity to be verified w/H_2 monitoring before processing begins 3. Tank vent to be installed 4. NPH risk is acceptable for short time tank car will remain since probability is low 1-4: 5. Emergency Response Plan will be prepared. 6. PPE defined in HASP 7. Process zone to be roped off to preclude unauthorized entrance 8. Pit is acid resistant coated. Outlets verified, 2 catch basins to be dammed.
More HF composition than expected	Solution in tank car is > 28.7% HF	1. Lower pH, more reaction, and higher temperature in neutralization tank than expected causes excess heat/pressure in neutralization tank causing neut tank failure	Personnel exposure to HF vapor and liquid	IID-13	None	Solution is homogeneous. Tank car has been sampled 3 times in the last 2 years and the probability of > 28.7% HF is incredible. No further corrective action required.

000045

7018

HF Tank Car

Deviation	Cause	Consequence	Hazard	Risk	Action	Status
Tank car composition is other than HF	Contaminants in tank car	Unexpected reaction in neutralization tank leading to tank failure	Personnel exposure to unknown vapors/liquids	IID-13	1. Periodic sampling of liquid being pumped from tank car 2. Emergency spill preparedness 3. Proper use of PPE 4. Exclusion zone around process 5. Secondary containment capability - acid coat pit 6. Pressure relief system on neutralization tank	Tank car has been sampled 3 times in the last 2 years and the possibility of materials other than HF is incredible. No corrective action required.

000046

7018

HF Tank Car

Deviation	Cause	Consequence	Hazard	Risk	Action	Status
No flow	1. Blocked dip tube - flaked-off pieces of rubber liner (or other debris) block tube 2. HF transfer pump failure 3. Tank car empty of liquid 4. Pipe/flange failure 5. Manual check valve @ neut tank improperly positioned CLOSED w/HF transfer pump ON 6. HF transfer pump is ON and the solenoid-actuated valve upstream of the pump fails closed 7. Manual 3-way valve between tank car and HF transfer pump improperly positioned	1. No flow 2. HF liquid/vapor release during pump maint 3. No flow 4. HF release from pipe/flange failure 5. Pipe/flange overpressure 6. No flow 7. Water flow into tank car	1. Exposure to HF during unblocking 2. Personnel exposure to HF liquid/vapor during pump maintenance 3. No hazard 4. Personnel exposure to HF liquid/vapor 5. Personnel exposure to HF liquid/vapor 6. No hazard 7. Heat produced if water pumped into tank car - HF vapor released	1. IID-13 2. IID-13 3. IVB-11 4. IIC-6 5. IIB-5 6. IVC-14 7. IIC-6	1.1 Filter on end of dip tube 1.2 Provide air backwash capability to clear tube 1.3 Place lower end of dip tube slightly above bottom of tank car sump until end of processing so any debris will not be vacuumed in as readily 2. Monitor HF transfer pump pressure output 3. Monitor liquid level in tank car 4. Test pipe and flanges at 150% of max operating pressure 5.1 Lock & Tag procedure for valve 5.2 Test pipe and flanges at 150% of max operating pressure 5.3 Limit HF transfer pump pressure output 6. None 7. Lock & Tag procedure for valve 1,2,4,5. 8. Define and provide PPE 9. Emergency spill preparedness. 10. Secondary containment	1.1 Per Foster Wheeler Engrg., there has been no indication of debris in the tank car. Filter would need to be cleaned off resulting in similar potential for HF exposure as unblocking the tube. Filter will not be used. 1.2 3-way valve added for air backwash cleaning 1.3 Tube will be kept slightly up from the bottom until the last batches 2. Pump will be monitored 3. Tank car level will be monitored from number of batches pumped out 4. Pipe and flanges rated to 150 psi. Max pump discharge is 75 psi. Pipes and flanges will be tested at 150% of 75 psi = 113 psi 5.1 Lock & Tag will be in place 5.2 Same as 4. 5.3 Pump overpressure relief provided by recycle feature at 50 psi 7. Lock & Tag will be in place 1,2,4,5: 8. PPE will be specified in the HASP 9. Emergency spill plan TBP 10. 97% of pipe will be over acid -resistant dike. All connections to have valve covers. Lime/sand bags will be placed to contain spill from pipe which is not above dike (6 ft).

000047

7018

HF Tank Car

Deviation	Cause	Consequence	Hazard	Risk	Action	Status
High pressure	1. Pump pumping backwards overfills & overpressures tank car leading to tank car rupture 2. High ambient temperature raises pressure inside tank car causing tank car rupture	1,2 HF liquid/vapor release	1,2 Personnel exposure to HF vapor/liquid	ID-9	1. Determine credibility for pump to pump backwards 2. Verify tank car is vented	1. Internal check valve in HF transfer pump will not allow gravity or reverse flow 2. Tank car vent to be installed
Low pressure	Tank car empty of liquid or dip tube failure	Pump cavitation	None	IVD-16	1. Vent the tank car 2. Monitor pump pressure output 3. Monitor liquid level in tank car	1. Tank car to be vented 2. Pump output is monitored 3. Tank car level will be monitored
High temperature	1. High ambient temperature raises temperature in tank car 2. Water source is connected to manual 2-way valve with "T" between tank car and HF pump, and water is pumped into HF tank car causing exothermic reaction	1. Increased HF vapor concentration in tank car 2. Increase in HF vapors released from tank car	1. Increased probability and severity of personnel exposure to HF vapors near top of tank car 2. Personnel exposure to HF vapor	1. IIIB-8 2. IIC-6	1.1 Verify tank car is vented 1.2 PPE for work at top of tank car 1.3 IH monitoring 2. Lock & Tag 2-way valve w/"T"	1.1 Tank car to be vented 1.2 PPE specified in HASP 1.3 IH monitoring in HASP 2. Lock & Tag procedure will be implemented for the manual 2-way valve w/"T"
Low temperature	Tank car steel temperature < transition temperature (≈40°F) of tank car's SA 283 steel	Low temperature increases brittle characteristics of tank car's SA 283 steel resulting in increased susceptibility to tank crack propagation from existing defects when additional stresses are introduced	Personnel exposure to HF	IID-13	Prohibit tank car movement when tank car steel is below freezing	Although no movement of the tank car is anticipated, it's movement will be prohibited below freezing

000048

7018

HF transfer pump and associated HF piping

Deviation	Cause	Consequence	Hazard	Risk	Action	Status
No operation, no pressure, no flow when flow desired	1. Pump not turned on 2. Inherent or induced pump failure 3. Pump/suction pipe clogged 4. HF valve solenoid SY-19 -269A fails de-energized 5. HF valve fails closed 6. Pipe/flange failure	1. No HF pumped to neut tank 2.1 No HF pumped to neut tank 2.2 HF transfer pump requires maintenance 3. No HF flow - need to unclog 4. No HF flow 5. No HF flow - need to repair/replace valve 6. No HF flow, HF release	1. None 2.1 None 2.2 Personnel contact w/HF liquid and vapor when repairing pump 3. Personnel contact w/HF liquid and vapor when unclogging pipe or pump 4. None 5. Personnel contact with HF vapor/liquid when R&R valve 6. Personnel exposure to HF vapor and liquid	1. IVA-10 2.1 IVB-11 2.2 IIB-5 3. IIIC-12 4. IVC-14 5. IIIC-12 6. IIC-6	1. None 2.1 None 2.2 Provide capability to flush system w/water before maint, use proper PPE 3. Same as 2.2, and filter on suction pipe and/or pump 4. None 5. Same as 2.2 6.1 Limit pump pressure output 6.2 Test pipe and flanges at 150% of max operating pressure 6.3 Verify destination of Tank Farm catch basins' outlets 2,3,5,6: 7. Define and provide PPE 8. Emergency spill preparedness 9. Secondary containment	2.2 Manual 3-way valve provides flushing capability, PPE defined in HASP 3. 2.2, no indication of debris in tank car - no filter to be used 6.1 Pump pressure will be limited to 50 psi with a recycle feature 6.2 Pipe & flanges rated @ 150 psi. Both will be tested at 150% of 75 psi = 113 psi 6.3 Will be verified 7. PPE defined by HASP 8. Emergency Spill Plan TBP 9. Flange/valve connections will have acid-indicating covers. Pipe is over secondary containment except for a 6 ft section of pipe which will have sand bags for containment.

000049

2018

HF transfer pump and associated HF piping

Deviation	Cause	Consequence	Hazard	Risk	Action	Status
High operation, high flow, high pressure	HF transfer pump overspeed	1. Pump overstress and failure 2. Excess HF flow, excess reaction and heat in neutralization tank causing neut tank failure 3. Pipe/flange overpressured resulting in pipe/flange failure	1.1 No flow 1.2 Personnel contact w/HF liquid and vapor when repairing pump 2. Personnel exposure to HF liquid and vapor 3. Personnel exposure to HF liquid and vapor	1.1 IVC-14 1.2 IIIC-12 2. IIIC-12 3. IIIC-12	1.1 Limit pump pressure output by size 1.2 Pump overpressure protection 1.3 Flow indicator downstream of pump 1.4 Test pump at 150% of max output 1.5 Remote pump emergency stop switch 2. Redundant, automatic control of HF input to neut tank 3.1 Test pipe/flange at 150% of max pump pressure output 3.2 Pipe/flange rated pressures > pump max output pressure 3.3 Verify Tank Farm catch basins' outlets do not flow to SWRB 1,2,3: 4. PPE 5. Emergency Spill Plan 6. Secondary containment	1.1 Pump output limited to 3.5 gpm 1.2 Pump recycles @ 50 psi 1.3 Rotameter downstream of pump 1.4 Water can be forced thru pump @ 150% of max pump pressure to test 1.5 HS-19-269C @ neut tank instrument panel 2. Redundant pH & temp sensors, pH controllers and TEMP HIGH switch will control HF addition 3.1 Pipe & flanges will be tested at 150% of 75 psi = 113 psi 3.2 Pipe & flanges rated @ 150 psi, max pump output is 75 psi 3.3 Catch basins' outlets verified as not going to SWRB except CB25 & CB221 which will be dammed 4. PPE defined in HASP 5. Emergency Spill Plan TBP 6. Pipe and pump will have secondary containment
Low operation, low flow, low pressure	Same as no flow/operation/pressure above					
Reverse operation	1. Pump connected in reverse electrically or hydraulically 2. Flow backwards through pump	HF flow into tank car	Not credible, no hazard	1. IVD-16 2. IVD-16	1. None 2. None	Not Applicable

000050

2018

HF transfer pump and associated HF piping

Deviation	Cause	Consequence	Hazard	Risk	Action	Status
Flow when none desired	Upstream manual check valve is positioned for HF flow, pump SW is ON, redundant TEMP HIGH, pH HIGH and LEVEL HIGH relays are closed, AND: 1. HF solenoid SY-19-269A fails energized, opens valve and energizes pump OR 2. Loss of air pressure opens valve and energizes pump OR 3. Neut pump lowers neut tank level and energizes pump (A special case of: HF transfer pump auto shutoff due to one of the relays opening – HIGH TEMP, HIGH LEVEL, or LOW pH – then signal clears and pump restarts)	1,2,3: 1. HF is pumped to neut tank, overflowing neut tank 2. HF is pumped to neut tank, pH of completed batch is lower than Plant 8 input requirements 3. Excess HF liquid into neut tank results in HF vapors out of neut tank 4. HF flow when water or air flow desired	1. Spill of low pH slurry onto ground exposes personnel to acidic slurry and vapors 2. Need for additional pumping or handling of unacceptable batch exposes personnel to contact with low pH slurry and vapors 3. Personnel exposure to HF vapors from neut tank	1,2,3,4. IIID-15	1.1 Verify manual check valve is in correct position for water or air operations 1.2 Install HF solenoid SY-19 -269A so valve fails closed when solenoid is de-energized 1.3 Assess probability of dual failures of dual redundant TEMP HIGH, pH HIGH or LEVEL HIGH relays or switches 2. Install air to pneumatic actuator so loss of air pressure closes valve 3.1 Verify HF transfer pump remains de-energized after an auto shutoff for any reason 3.2 Verify pump requires manual restart after auto shutoffs 1,2,3: 4.1 PPE reqs for normal ops in process area and for cleanups 4.2 Neut tank secondary containment 4.3 Emergency Spill Plan 4.4 Plan for contingency operation of pumping out full neut tank of unacceptable slurry 4.5 Emergency STOP switch for the HF transfer pump	1.1 In Operations Procedure 1.2 Verify in field 1.3 Acceptably low risk due to low prob of dual failure – see the FTA in Appendix E 2. Verify in field 3.1 HF pump remains de-energized after all auto shutoffs 3.2 HF pump must be manually turned ON after all auto shutoffs 4.1 PPE specified in HASP for normal ops and cleanup 4.2 Herculite to be added on east side of neut tank 4.3 Catch basins' outlets checked 4.4 Provisions will be made in Operations Procedures 4.5 HS-19-269C on instrument panel @ neut tank, and power to HF pump can only be applied manually

000051

2018

HF transfer pump and associated HF piping

Deviation	Cause	Consequence	Hazard	Risk	Action	Status
No containment	1. Pump/pipe/flange overpressure failure 2. Pump/pipe failure from use of incompatible materials 3. Natural Phenomena Hazard (NPH) - tornado, high wind, earthquake 4. Pipe/flange failure due to vibration from pump	HF liquid/vapor release	Personnel exposure to HF liquid and vapor	1,2,4. IIIC-12 3. IID-13	1.1 Test pump/pipe/flange at 150% of max pump pressure output 1.2 Use pipe/flanges rated at pressure > max pump output pressure 1.3 Test that pump recycles at 50 psi 2. Use pump, seal, flange and piping materials compatible with HF 3. Provide periodic vertical support to piping suspended between tank car and tie-in point to reduce effects of vibration from pump operation on pipe 1, 2, 4: 4. Emergency spill preparedness. Verify destination of Tank Farm catch basins' outlets 5. Proper use of PPE 6. Exclusion zone around process 7. Locate pump/pipe in secondary containment w/acid resistant coating 8. Install acid-indicator jackets around pipe flanges/connections	1.1 Pump will be pressure tested by forcing water thru at 150% of max operating pressure. Pipe/flanges will be tested at 150% of max pump output pressure = 113 psi 1.2 Pump output is limited by overpressure recycle function at 50 psi, flanges & pipe are rated at 150 psi 1.3 Pump recycle feature to be tested 2. Pipe, pump, seal, and flanges are made of materials compatible with HF (Kynar and teflon) 3. Pipe supported every 10 ft 4. Emergency Plan will be prepared, destination of spill in Tank Farm verified 5. PPE defined in HASP 6. Exclusion zone will be maintained around process area 7. HF piping and pump is within acid-resistant coated diked area except about 6 ft (3%) of pipe downstream of the HF pump. This will be contained with lime bags placed under/around the piping 8. Acid indicator jackets will be provided

000052

2018

Solenoid (SY-19-269A)-actuated HF ball valve upstream of HF Transfer Pump (HV-19-269A)						
Deviation	**Cause**	**Consequence**	**Hazard**	**Risk**	**Action**	**Status**
No flow through valve when flow desired	1. Valve fails closed - corrosion, mechanical failure 2. Valve clogged with contaminants 3. Valve flushed w/water and not drained during freezing temps causing frozen-closed valve 4. ASL-19-154 fails LOW de-energizing solenoid SY-19-269A and closing valve 5. Solenoid SY-19-269A fails de -energized and closes valve 6. Loss of air pressure to solenoid SY-19-269A closes valve	No flow to HF pump - requires maintenance of valve or solenoid	Personnel exposure to HF liquid and vapor during valve maintenance	1.IIIC-12 2.IIIC-12 3.IVB-11 4.IIIC-12 5.IIIC-12 6.IIIC-12	1. Use valve/gasket material compatible w/HF 2.1 Filter on dip tube 2.2 Place dip tube above bottom of tank car sump until last batches to avoid suction of debris into system 3.1 Provide drains on each side of valve 3.2 Include draining valve of water after flushing and before possible freezing temps in oper/maint procedures 4. No concern if it fails LOW and shuts of HF pump. Install ASL-19-154 so if it fails HIGH it will de-energize solenoid SY-19-269A and close valve (fail-safe). 5. Install solenoid SY-19-269A so if it fails it will close valve 6. Install air to solenoid so loss of air pressure closes valve 1-6: 7. Secondary containment under valve 8. Proper PPE for maint	1. Valves are made of Kynar or teflon which are compatible w/HF 2.1 Probability of debris is low since none has been seen in samples - no filter to be used 2.2 Tube will be kept off the bottom until the last batches 3.1 Drains will be provided 3.2 Will be included in Procedures 4, 5, 6, Will verify in field after installation 7. Valve located over containment pit 8. PPE for maint defined in HASP
Flow through valve when none desired	1. Same as "Flow when none desired" above for HF pump 2. Manual check valve upstream in position for water flow, water source attached, and valve fails open	1. Same 2. Water flows through valve and stops at pump	1. Same 2. Water in line	1.Same 2.IVD-16	1. Same 2. Drain plugs around valve	1. Same 2. Drains included HF pump has internal check valve that prevents siphoning or reverse flow

000053

7018

Solenoid (SY-19-269A)-actuated HF ball valve upstream of HF Transfer Pump (HV-19-269A)						
Deviation	**Cause**	**Consequence**	**Hazard**	**Risk**	**Action**	**Status**
Low temp	Low ambient temperature after water flush	Valve frozen open or closed	No flow	IVD-16	Provide drains and include draining line in ops/maint manual	To be included
High pressure/ high flow through valve	Same as "High flow through pump" above					

Element: Manual 3-way valve for water/HF						
Deviation	**Cause**	**Consequence**	**Hazard**	**Risk**	**Action**	**Status**
Flow of water to neut tank when HF desired	Manual 3-way valve improperly positioned for water (human error) with downstream manually operated solenoid valve open, pump ON, and water source connected	Water pumped to neut tank	Need for additional processing of neut tank contents	IVD -16	1. Provide corrective action plan for pumping out-of-spec slurry from neut tank 2. Procedures and lockout/tagout 3. Keep water source disconnected unless needed	1,2,3. Will be included in procedures or determined on a case-by-case basis
Flow of HF to neut tank when water flush desired	Manual 3-way valve improperly positioned for HF (human error) with downstream manually operated solenoid valve open and pump ON	HF inadvertently pumped to neut tank	Need to process HF with abnormal procedure	IIC-6	1. Corrective action plan for abnormal operations 2. Lock and tag and procedures for manual 3-way valve	1,2. Will be included in procedures
Flow of water to tank car when water flush of system desired	Manual 3-way valve in improper position (human error) with downstream manually operated solenoid valve closed and water source attached to 3-way valve	Violent reaction in tank car	Personnel exposure to HF vapor	IIC-6	Lock and tag and procedures	Procedures will require Lock & Tag

000054

7018

Manually operated solenoid valve upstream of Neutralization Tank

Deviation	Cause	Consequence	Hazard	Risk	Action	Status
No flow through valve	1. Valve fails closed - corrosion, mechanical failure 2. Valve clogged with debris 3. Valve frozen closed from low temp and previous water flush w/o draining 4. Valve improperly positioned (human error)	1. HF pump overstress and failure 2. Piping/connection overpressure and failure	1. Personnel exposure to HF liquid and vapor during pump maint 2. Personnel exposure to HF liquid and vapor from pipe/flange failure	IIIB-8	1. Compatible valve/gasket materials 2. Filter upstream 3. Limit operations to temps > freezing and drain system before freezing temps 4. Procedures for valve oper and proper labeling 5. Overpressure relief system on pump 6. Use pump with max pressure output less than pipe/flange rated pressure 7. Secondary containment under pump and piping - acid coated 8. Emergency preparedness 9. PPE for maint/normal ops	1. Kynar or teflon valve material 2. Low probability of debris in tank per Engineering - no filter to be used 3. Procedures for cold oper temps 4. Valve labeling and procedures will be implemented 5. Pump overpressure relief with recycle feature at 50 psi 6. Pipe and flanges rated at 150 psi, max pump output pressure at 75 psi 7. Secondary containment provided 8. Emergency Plan TBP 9. PPE defined in HASP
Flow through valve when none desired	HF pump ON and: 1. Valve fails open due to corrosion or mechanical failure 2. Valve stuck open from debris 3. Valve frozen open 4. Valve improperly positioned (human error)	1. HF is pumped to neut tank, overflowing tank 2. HF is pumped to neut tank, pH of completed batch is lower than Plant 8 input requirements 3. Excess HF liquid into neut tank results in HF vapors out of neut tank 4. HF flow when water or air flow desired	1. Spill of low pH slurry onto ground exposes personnel to acidic slurry and vapors 2. Need for additional pumping or handling of unacceptable batch exposes personnel to contact with low pH slurry and vapors 3. Personnel exposure to HF vapors from neut tank	IIIC-12	1. Corrective Actions from "Flow when none desired" from HF pump segment 2. Procedures and Lock & Tag for manual valve operation 3. Drains around valve 4. Procedures for draining valve after flushing with water and before freezing temps 5. Valve material compatible with HF 6. Filter upstream of valve	1. See above 2. Procedures will be provided 3. Drains around valve in design 4. Procedures for draining valve 5. Valve made of kynar 6. No debris has been found in samples

000055

7018

Manually operated solenoid valve upstream of Neutralization Tank						
Deviation	**Cause**	**Consequence**	**Hazard**	**Risk**	**Action**	**Status**
High pressure/ high flow through valve	Pump overspeed	Leak from valve flanges	1. Respiration hazard - personnel overexposure to HF vapors 2. Personnel contact w/liquid HF spill - acid burns	IIIC-12	1. Install pump with max pressure less than valve flange rated pressure 2. Pressure test valve at 150% of max system operability pressure 3. Secondary containment 4. Emergency preparedness 5. PPE for normal and clean-up operations	1. Pump limited to 50 psi with recycle feature for overpressure, flanges rated at 150 psi 2. Flanges and valves to be tested at 150% x 75 psi = 113 psi 3. Valve will be within Tank Farm secondary containment - catch basins' outlets verified 4. Emergency Preparedness Plan TBP 5. PPE defined in HASP

000056

7018

Neutralization Tank

Deviation	Cause	Consequence	Hazard	Risk	Action	Status
High pressure, high temperature	1. More reaction in tank than expected or more heat generated than expected 2. Vent diameter too small 3. Inadequate pH sensing in neut tank - dual probe or controller failure due to common cause 4. HF added to tank before water causes violent exothermic reaction	1. Neutralization tank or liner failure from overtemperature or overpressure 2. HF vapor or excess CO_2 through solids addition line causes low oxygen atmosphere of HF in lime house 3. pH too low in neut tank, HF vapors out of tank 4. HF vapors out of tank with energetic dispersion from reaction	1.1 Personnel exposure to HF vapor/liquid 1.2 Personnel exposure to overpressure event 2. Personnel exposure to oxygen deficient atmosphere from excess CO_2 release 3.1 Personnel exposure to HF vapors out of tank 3.2 Need to process slurry with pH too low for Plant 8 4. Personnel exposure to HF vapors	1.1 ID-9 1.2 ID-9 2. IC-4 3.1 IIC-6 3.2 IIIC-12 4. IC-4	1.1 Document chemical analysis showing rationale for process 1.2 Automatic, redundant feedback and control of process 1.3 Determine rubber lining temp limit, set limit switch lower 1.4 Verify neut tank is vented 1.5 Emergency spill preparedness 1.6 Proper use of PPE 1.7 Exclusion zone around process 1.8 Secondary containment 1.9 Require manual HF pump restart after any shutoff 1.10 Add high temp alarm 2.1 HF and CO_2 monitoring 2.2 Adequately size vent and locate stack high enough to prevent oxygen deficient atmosphere near personnel 2.3 Leave lime in screw conveyor at end of solids addition to block HF vapors from entering lime house during process 3.1 Separate pH sensors and at depth of expected equilibrium 3.2 Provide strip chart monitor for pH and temperature so pH/temp can be correlated with HF flow for learning of batch process 3.3 Verify pH probe material is compatible with HF 3.4 Prepare for contingency operation of out-of-spec slurry and full neut tank 3.5 Use different brand, manuf, type of pH probes to preclude common cause failures of probes 4. Prevent out-of-sequence addition of HF	1.1 Foster Wheeler chemical analysis in CSIP. FERMCO Process Engrg is confident the reaction will produce the same temperature rise as the bench scale testing. 1.2 Redundant temperature and pH sensors, pH controllers and a TEMP HIGH switch in neutralization tank w/automatic control back to HF control valve and pump 1.3 Temp limit of rubber lining is 200°F, TEMP HIGH controller set at 140°F 1.4 Tank is vented thru overflow line and vent stack 1.5 Emergency Plan TBP 1.6 PPE defined in HASP 1.7 Process area will be roped off to limit access 1.8 Neut tank is in containment area - herculite will be installed on east side of tank area 1.9 Manual start of HF pump required 1.10 Audible HIGH TEMP alarm at 150°F 2.1 HF and CO_2 monitoring required before entry into Lime House by HASP 2.2 CSIP verifies vent stack design 2.3 Screw conveyor diameter is too narrow to transport excessive vapors 3.1 Agitator and tank baffles provide homogeneous mixing 3.2 6-point strip chart recorder included 3.3 Probes are teflon/CPVC or Ryton and are HF-compatible 3.4 In procedures 3.5 pH probes are of different type and manufacture. Procurement process and maintenance of other component spares inhibits implementation of this requirement -- risk accepted. 4.1 Low level/pH sensors and procedures prohibit pump operation w/o slurry in tank 4.2 Procedures and training TBP

000057

2018

Neutralization Tank

Deviation	Cause	Consequence	Hazard	Risk	Action	Status
Low pH	1. Inadequate agitation due to agitator shaft failure or paddles' depths 2. Screw conveyor clogs/fails 3. HF added out of sequence - HF added to tank before lime/$CaCO_3$ mixture 4. Inadequate lime/$CaCO_3$ added to hopper 5. Dual pH controller failure 6. Dual pH probe failure 7. Inadequate pH sensing capability	1. Spots of highly acidic and caustic solution in neut tank results in incorrect pH sensing, lack of process control, and too much HF added to tank 2. Operation stopped since pH too low 3. Highly acidic solution in neut tank 4. pH in tank too low to start operation 5. Lack of process control - too much HF added to neut tank 6. Lack of process control - too much HF added to neut tank 7. Lack of process control - too much HF added to neut tank Inadequate level or pH control of process from above causes results in: 1. Tank corrosion and failure with HF liquid and vapor release 2. HF vapor out of vent stack, overflow, or screw conveyor/hopper 3. Need to process out -of-spec slurry	1. Personnel overexposure to HF liquid and vapor release 2. Personnel exposure to HF vapor 3. Personnel exposure to acidic slurry	1.IIIC-12 2.IVC-14 3.IIIC-12 4.IVC-14 5.IIIC-12 6.IIIC-12 7.IIIB-8	1.1 Indication if agitator stops rotating 1.2 Verify agitator paddles' depths provide adequate mixing 2. Test level & pH alarms before batch 3. Sample at end of batch before pumping slurry out 4. Procedural control of # of bags of lime/$CaCO_3$ added 5. Probability of dual controller failures is an acceptable risk 6. Probability of dual pH probe failures is an acceptable risk 7. Locate pH probes at optimum locations and depths for sensing 8. Verify tank and liner integrity and compatibility with HF 9. Low pH alarm and pump emergency OFF switch - dedicated HF pump circuit w/circuit breaker 10. Plan/procedure for processing out-of-spec tankful of slurry	1.1 Operator to be trained to observe for signs of agitator failure & Warning in Ops Proc 1.2 Paddles at 2 depths will provide adequate mixing 2. Level & pH circuits to be tested after installation, pH probes calibrated before each batch, pH sample at end of batch 3. Sampling in procedures 4. Included in procedures 5. FTA shows low prob of flow control failure 6. FTA shows low prob of flow control failure 7. Probes are spread apart 8. Tank is rubber-lined - is compatible with HF operation as long as rubber lining is not exposed to over-temperature 9. Pump emergency OFF switch in design; pH indicator @ neut tank; pH alarm at pH=5; HF pump on dedicated circuit w/circuit breaker 10. Time limit (90 min) in Procedures to stop HF addition and verify tank conditions

000058

7018

Neutralization Tank

Deviation	Cause	Consequence	Hazard	Risk	Action	Status
High pH	1. Excess lime/$CaCO_3$ added to hopper 2. Inadvertent screw conveyor operation 3. Agitator failure causes incomplete mixing	Caustic solution	Minor personnel contact hazard	IVC-14	1. Warning indication if agitator stops working during HF addition 2. Spacing/depth of redundant pH sensors should provide adequate pH sensing capability to control process	1. Procedures and training will warn operators to stop HF flow if process indications are abnormal 2. Closed
High level	1. Excess water added to tank 2. Lime/$CaCO_3$ volume > design added to tank 3. Batch size of 1150 gal may exceed tank volume due to slurry movement during agitation or inability to drain bottom 8" of tank 4. HF pump starts after neut pump drains tank below high level 5. HF pump starts after tank level is lowered after auto HIGH LEVEL shutoff 6. Frothing from neutralization causes overflow	1,2,3, 6. Tank overflow 3. Plant 8 cannot accept slurry if pH>12 4,5. Low pH slurry	1. Spill of neut tank contents, possibly some HF liquid or vapor 2. Personnel exposure to caustic slurry	1.IVC-14 2.IIIA-7 3.IIIA-7 4.IIIC-12 5.IIIC-12 6.IIIC-12	1. Water batch controller and dual tank level sensors should maintain risk of overflow to an acceptable level - add audible HIGH LEVEL alarm 2.1 Verify volumes of 268# $CaCO_3$ and 625# lime 2.2 Procedure to control addition of correct # of bags of solids 2.3 Place herculite sheeting for secondary containment on east side of neut tank 3.1 Confirm batch volume to account for slurry motion due to agitation and overflow/drain locations 3.2 Plan on different volume of HF addition due to inability to drain bottom 8" of tank 3.3 Procedure for full neut tank w/pH > 12 4. Require manual HF pump restart after any auto shutoff of HF pump 5. Verify frothing will not exceed 6" height to overflow	1. High level alarm sounds at 6" from top of tank 2.1 Volumes will be verified with first batch 2.2 In procedure 2.3 Herculite tarp will be added 3.1 Will be verified with first batch 3.2 Water addition volume may be reduced and drain outlet depth reduced to 3" from bottom 3.3 Will be addressed in procedures 4. HF pump can only be started manually 5. Frothing should not exceed 6" due to HF addition at bottom of tank and agitation

000059

7018

Lime/$CaCO_3$ Bag splitter/screw conveyor/hopper system						
Deviation	**Cause**	**Consequence**	**Hazard**	**Risk**	**Action**	**Status**
No containment	1. Hopper failure - vacuum, corrosion 2. Connection failure 3. Hopper overfilled 4. Dust collector failure 5. Forklift impacts building	1,2,3,4. $CaOH_2$ and $CaCO_3$ release 5. Building damage, workers affected	1. Personnel overexposure to lime and $CaCO_3$ dust 2. Building damage, 2 serious worker injuries	1.IIID-15 2.IVC-14 3.IIID-15 4.IIIC-12 5.IIC-6	1,2. Verify integrity of hopper and connections 3. Caution operators in procedures 4. Auto shutoff of hopper feed if dust collector fails 5. Concrete wheel stop to limit forklift movement toward building	1,2. Integrity of hopper and connections will be verified 3. Will be in procedures 4. Dust collector operation to be monitored 5. After further discussion with RSO, no curb needed
Inadvertent bag splitter operation	Electrical malfunction, human error	1. Inadvertent personnel contact with bag splitter 2. Overfilling of neutralization tank	1. Personnel injury 2. Spill of caustic tank contents	1.IIC-6 2.IIIC-12	1. Deadman switch for bag splitter operation 2. Procedure for solids addition	1. Saw power interrupted if window barrier opened 2. In procedures & training
Other than normal atmosphere in lime system building	HF vapor, neutralization solids, or CO_2 forced up through lime screw feeder cylinder into lime system building from tank (over) pressure	HF vapor, lime/$CaCO_3$, or CO_2 in confined space of lime system building	Exposure of personnel in lime system building to HF vapor, lime/$CaCO_3$, or low O_2 atmosphere	IIC-6	1. HF and CO_2 levels to be monitored by IH before workers enter into lime system building 2. Introduce HF into neut tank below liquid surface to limit HF vapor in vapor space of neut tank	1. In HASP 2. Closed - in design 3. 6" pressure vent pipe and 3" overflow pipe provide adequate pressure relief even if HF addition rate is 4X the design rate. HF contained in bubbles will be adequately scrubbed of HF before they hit the slurry surface. See CSIP calculations.

000060

7018

Element: Transfer Vehicle to Plant 8

Deviation	Cause	Consequence	Hazard	Risk	Action	Status
Lack of containment	Vehicle inadvertently contacts or is struck by another object or vehicle	Neutralized slurry spilled onto ground	Vehicle damage, 1 serious personnel injury from impact, spilled slurry	IIC-6	Driver training	Drivers will be trained transportation workers

Element: Water Supply System

Deviation	Cause	Consequence	Hazard	Risk	Action	Status
Low temperature	Weather	Frozen valves/pipes cause valve/pipe failures	Minor - lack of mission capability	IVA-10	1. Insulate and heat trace, don't operate in freezing weather 2. Drain lines after use	1. Heat trace added 2. Include in procedures

Element: Plant 8 filtration operation

Deviation	Cause	Consequence	Hazard	Risk	Action	Status
In addition to neutralized slurry	Other material, such as nitric acid, is inadvertently added to the neutralized slurry in Tanks F-104, D-105 or D-104 at Plant 8	Unknown reaction	Personnel exposure to toxic	IID-13	1. Determine potential for reformulation of HF at Plant 8 2. Dedicate and isolate Plant 8 filter system to be used with neutralized slurry with valves	1. Reformulation of HF or creation of other toxic materials is incredible 2. Correct implementation of SOP-08-C-602 will isolate neutralized slurry in the tanks

000061

7018

Appendix C

Supporting Calculations

HF Neutralization Process Accident Analysis

Case 1 - HF transfer pump/pipe flange failure

Given:
- HF is 28.7% dilute, density = 67.5 pcf [9] → specific gravity = 1.08 g/mℓ
- Conversion: 1 ppm = 0.83 mg/m^3
- M = molecular weight of HF = 20 g/mole
- Containment pit plan area = 100 ft x 20 ft = 2000 ft^2
- Partial pressure of 30% HF at 100°F= 4 mm Hg[19]
- Pump is about 23 ft (7.0 m) above the containment pit

Assumptions:
- Pump is pumping at it's max output flow of 3.5 gpm
- 50% of fluid flow exits through leak in flange = 1.75 gal fluid/min
- Pump operates (and leak continues) for 2 hours before being shut off
- The exposure pathway is via respiration only
- No credit is taken for building or meander effects
- No corrective actions are taken to prevent the HF from continuing to spill or evaporating, or neutralizing the spilled HF
- Pasquill atmospheric stability Class D, wind speed 4.5 m/sec per WSRC-MS-92-206 Rev. 1
- Temperature is 100°F
- Closest on-site receptor at 100 m per WSRC-MS-92-206 Rev. 1
- Closest off-site receptor = 700 m from containment pit to east fence

The total source term for this event is a combination of three sources:

1. Depressurization of the fluid via the flange breach - an elevated spray nozzle source
2. Free fall spill of the fluid onto a surface - a mechanical action source
3. Evaporation of the fluid from the resulting pool in the containment pit

Source term 1 - Fluid depressurization

Source term = HF release rate x ARF x RF

The Airborne Release Fraction (ARF) and Respirable Fraction (RF) of the spray leaking out of the flange between the HF pump and the piping may be developed from experimental data applicable to this situation. This information can be found in Mishima[20] page 3-19. The ARF for this HF source term was estimated by comparing it to the one Mishima developed -- a 0.128" diameter orifice releasing fluid at 200 psig. It is termed a "spray nozzle source". The maximum pressure in the HF system during normal operations can only reach 50 psig since the HF pump has a recycle function at 50 psig as a safety feature to protect against overpressure of the system. The flanges are rated at 150 psi. If this recycle function were to fail and the downstream manual valve were inadvertently closed, one may conservatively postulate that the pressure could approach 200 psig before the flange ruptures, so this ARF will be applied ina conservative sense. Mishima recommends an ARF of 1.0E-04 with an RF of 1.0.

$$\text{HF release rate} = \left(\frac{1.75\ \text{gal fluid}}{\text{min}}\right)\left(\frac{\ \text{min}\ }{60\ \text{sec}}\right)\left(\frac{3785\ \text{m}\ell}{\text{gal}}\right)\left(\frac{1080\ \text{mg}}{\text{m}\ell}\right)\left(\frac{0.287\ \text{mg HF}}{\text{mg fluid}}\right)$$

HF release rate = 34,218 mg HF/sec
Q_1' = Source term 1 = 34,218 mg/sec x 1.0E-04 x 1.0 = 3.42 mg/sec

Source term 2 - Free fall spill of the fluid onto a surface - a mechanical action source

Aqueous solutions spilled onto a hard surface are divided into droplets by the shear stress at the liquid surface during the fall and by the splashing impact upon striking the surface. The ARF for this source term was determined from page 3-26 of Mishima, for a fluid falling > 3 m:

$$ARF = 8.9E\text{-}10(Arch)^{0.55}$$

$$Arch = \frac{(\text{air density})^2\ (\text{spill height})^3\ g}{(\text{solution viscosity})^2}$$

air density = 0.00118 g/cc @ 68°F
spill height = 23 ft = 701 cm
g = gravitational constant = 981 cm/sec^2
viscosity = 0.018 poise = 0.018 g/cm-sec

$$Arch = \left(\frac{0.00118\ g}{(cm^3)^2}\right)^2 (701\ cm)^3 \frac{(981\ cm)}{sec^2} \left(\frac{cm\text{-}sec}{(0.018\ g)^2}\right)^2 = 1.45E{+}09$$

$$ARF = 8.9E\text{-}10(1.45E{+}09)^{0.55} = 9.7E\text{-}05 \text{ with } RF = 0.6 \text{ as worst case}$$

Q_2' = Source term 2 = 34,218 mg/sec x 9.7E-05 x 0.6 = 1.99 mg/sec

Source term 3 - Evaporation of the fluid from the resulting pool in the Tank Farm diked area

The evaporation source term is a function of the spill's surface area. The surface area will be calculated by estimating the worst case spill volume and then calculating this spill's surface area in the containment pit.

$$\text{Spill volume} = \frac{1.75\ gal/min \times 120\ min}{7.48\ gal/ft^3} = 28.07\ ft^3\ (210\ gal)$$

The containment pit's bottom is sloped downwards towards the north. The pit is six feet deep at the north end where the sump is located and three feet deep at the south end. It is 100 ft long and 20 ft wide in the plan view. The spill volume will be defined by a right triangular wedge since it will not cover the entire sloped bottom of the pit. The surface area of the spill in the containment pit will be calculated by solving for the depth and the length of the spill with two equations given that the width remains a constant 20 ft:

$$\text{HF volume} = 28.07\ ft^3 = \tfrac{1}{2}(\text{depth})(\text{length})(\text{width})$$
$$28.07\ ft^3 = \tfrac{1}{2}(\text{depth})(\text{length})(20\ ft)$$
$$2.807\ ft^2 = (\text{depth})(\text{length}) \qquad \textbf{Equ. 1}$$

By similar triangles: $\frac{3}{100} = \frac{depth}{length}$

$$depth = 0.03(length) \qquad \textbf{Equ. 2}$$

Substituting Equ. 2 into Equ. 1 → length = 9.67 ft, depth = 0.29 ft
Maximum HF surface area = 9.67 ft x 20 ft = 193.4 ft^2

In the opinion of chemists at ENSERCH Environmental, 30% dilute HF at atmospheric temperature and pressure is not considered a volatile liquid, that is, it does not evaporate readily in air. Further, a process safety engineer with JBF Associates, noted experts in the process safety field and familiar with HF, reports that as a general rule HF is not considered volatile unless its vapor pressure is at least 10 mm Hg. It is concluded that a liquid HF spill from this process will have a low rate of evaporation compared to other liquids considered "volatile". However, its evaporation potential will still be considered on a conservative basis. Evaporation of a volatile liquid from a stagnant film into a moving gas stream is calculated from Equation 21.5.36, page 662 of Reference 21:

$$1 + \frac{x_{A0} - x_{A\infty}}{\frac{N_{A0}}{N_{A0} + N_{B0}} - x_{A0}} = \exp\left(\frac{(N_{A0} + N_{B0})}{k_{x.loc}} \right)$$

where

$x_{A\infty}$ = mole fraction of the volatile liquid in the gas at an infinite distance from the stagnant film. This is effectively zero.

x_{A0} = mole fraction of the liquid in the gas at the surface of the stagnant film. Use the equilibrium vapor pressure of the gas divided by the total pressure: 4 mm Hg/760 mm Hg = 0.0052632.

N_{A0} = molal flux of the evaporating liquid into the gas stream (unknown N_{HF} lb-mole/hr/ft^2).

N_{B0} = molal flux of the gas into the evaporating liquid (for a non-condensable gas N_{B0} = 0).

$k_{x.loc}$ = mass transfer coefficient (prevailing average fluid properties for a volatile liquid into a non-condensable gas has a value of 0.1 lb-mole/hr/ft^2).

This gives:

$$1 + \frac{0.0052632}{1 - 0.0052632} = \exp(N_{HF}/0.1) \qquad \text{Solving for } N_{HF},$$

$$N_{HF} = 0.1 \ln\left(1 + \frac{0.0052632}{1 - 0.0052632}\right) = 0.0005277 \text{ lb-mole/hr/ft}^2$$

Mass flux M_{HF} = Evaporation rate = N_{HF} x 20 = 0.0105542 lb_m/hr/ft^2

Q_3' = Source term 3

$$Q_3' = \frac{(0.0105542\ lb_m)}{hr/ft^2}(193.4\ ft^2)\left(\frac{453.6\ g}{lb}\right)\left(\frac{10^3\ mg}{g}\right)\left(\frac{hr}{3600\ sec}\right) = 257.2 \text{ mg/sec}$$

Figure 5 - Case 1 Source Terms

Q_1' Pressurized spray	Q_2' Surface splash	Q_3' Evaporation
3.42 mg/sec	1.99 mg/sec	257.2 mg/sec

The downwind, centerline, ground-level concentration from an elevated source is calculated from *Workbook of Atmospheric Dispersion Models*,[22] Equation 3.3, page 6:

$$\chi(x,y,z;H) = \frac{Q'}{\pi\,\sigma_y\,\sigma_z\,\mu}\ \exp\left(-0.5\,(H/\sigma_z)^2\right)$$

χ = downwind centerline concentration, mg/m^3
x = downwind distance, m
y = distance off centerline, m = 0
z = height of receptor, m = 0
H = source height, m
Q′ = release rate, mg/sec
μ = wind speed = 4.5 m/sec
σ_y,σ_z = horizontal & vertical standard deviations of plume concentration distribution, m

From TID-24190[23]:

@ 100 m: σ_y = 8.2 m, σ_z = 4.9 m
@ 700 m: σ_y = 53.0 m, σ_z = 25.0 m

<u>Downwind concentration from Source term 1 - Fluid depressurization:</u>

$$\chi_1(100,0,0;7) = \frac{3.42\ \text{mg/sec}}{\pi(8.2\ \text{m})(4.9\ \text{m})(4.5\ \text{m/sec})}\ \exp\left(-0.5\,(7\ \text{m}/4.9\ \text{m})^2\right)$$

$\chi_1(100,0,0;7)$ = 0.0022 mg/m^3 = 0.0026 ppm

$$\chi_1(700,0,0;7) = \frac{3.42\ \text{mg/sec}}{\pi(53\ \text{m})(25\ \text{m})(4.5\ \text{m/sec})}\ \exp\left(-0.5\,(7\ \text{m}/25\ \text{m})^2\right)$$

$\chi_1(700,0,0;7)$ = 0.00018 mg/m^3 = 0.00021 ppm

<u>Downwind concentration from Source term 2 - splashing onto surface:</u>

This source term originates at ground level so the exponential term accounting for an elevated release is omitted.

$$\chi_2(100,0,0;0) = \frac{1.99 \text{ mg/sec}}{\pi(8.2 \text{ m})(4.9 \text{ m})(4.5 \text{ m/sec})(0.83)} = 0.0042 \text{ ppm}$$

$$\chi_2(700,0,0;0) = \frac{1.99 \text{ mg/sec}}{\pi(53 \text{ m})(25 \text{ m})(4.5 \text{ m/sec})(0.83)} = 0.00013 \text{ ppm}$$

Downwind concentration from Source term 3 - evaporation from pool:

This source term also originates at ground level so the exponential term accounting for an elevated release not applicable. The downstream concentration from the containment pit evaporation is calculated by using the virtual source approach for a continuous release from a pool where the pool is simulated to be an equivalent point source.[24] A new lateral diffusion coefficient, σ_y', is calculated assuming the pool is square. The σ_z remains the same. For a 193.4 ft^2 pool, assume the pool is square with a 13.9 ft (4.24 m) side.

σ_y = 4.24 m/ 4.3 = 0.98 m

σ_y = 0.98 m = 0.04 (x)(1 + 0.0001 (x))^{½}
Solving for x by trial & error, x ≈ 24.6 m

This distance, x, is added to the target distances, 100 m and 700 m, to calculate each respective σ_y':

σ_y' @ (100 + 24.6) m = 0.04(124.6)(1+0.0001(124.6))^{½} = 5.01 m

σ_y' @ (700 + 24.6) m = 0.04(724.6)(1+0.0001(724.6))^{½} = 30.0 m

$$\chi_3(100,0,0;0) = \frac{257.2 \text{ mg/sec}}{\pi(5.01 \text{ m})(4.9 \text{ m})(4.5 \text{ m/sec})(0.83)} = 0.89 \text{ ppm}$$

$$\chi_3(700,0,0;0) = \frac{257.2 \text{ mg/sec}}{\pi(\text{ m})(25 \text{ m})(4.5 \text{ m/sec})(0.83)} = 0.03 \text{ ppm}$$

Figure 6 - Case 1 Downwind Centerline Ground-level Concentrations

Downwind Distance	χ_1 (ppm) Pressurized spray	χ_2 (ppm) Surface splash	χ_3 (ppm) Evaporation	$\Sigma\chi$ (ppm) Total
100 m	0.0015	0.0025	0.70	0.70
700 m	0.00012	0.00008	0.02	0.02

Exposure Guidelines

The hazard classification guidances are shown in Figure 4 on page 18.

Case 2 - Tank Car Failure

This event would cause an HF release from a failure of the tank car in the form of an instantaneous release of vapor from the tank car vapor space, an instantaneous HF vapor release from the HF liquid splashing onto the surface of the containment pit, and then a continuous, evaporative release of HF vapor from the resulting pool surface area defined by the solution held in the containment pit. Therefore,

Total Release = Instantaneous Vapor Release + Instantaneous Splash Release + Evaporative Spill Release

Given:

- HF is 28.7% dilute, its partial pressure = 4 mm Hg at 100°F
- Quantity of HF liquid is 4400 gal, tank capacity is 8000 gal → vapor space volume is 3600 gal = 480 ft^3
- Instantaneous release concentrations are calculated as peak 15-min average values according to WSRC-MS-92-206
- From Mishima, Respirable Fraction (RF) = 1.0 for vapor release
- Containment pit dimensions: 100 ft by 20 ft with a sloped bottom 3 ft to 6 ft deep
- Spill height from tank car mid-height to containment pit bottom is about 11 ft = 335 cm

Assumptions:

- Same weather, atmosphere, receptor locations, σ_y, σ_z as Case #1 above
- HF liquid and vapor are in equilibrium in the tank car
- The exposure pathway is via respiration only
- No credit is taken for building or meander effects
- No corrective actions are taken to prevent the HF from continuing to spill or evaporating, or for neutralizing the spilled HF

Source Term 1 - Instantaneous Vapor Release

To calculate the weight of HF vapor released, the Ideal Gas Law is used:

$n = \frac{PV}{RT}$ where P = 4 mm Hg x (0.01934 psi/mm Hg) = 0.07736 psi
V = 480 ft^3
R = Gas Constant = 10.73 psi-ft^3/°R-lb-mole
T = °R = °F + 460 = 560°R
n = lb-mole HF vapor

$$n = \frac{0.0773684 \text{ psi} \times 480 \text{ ft}^3}{10.73 \times 560°\text{R}} = 0.0061797 \text{ lb-mole HF vapor}$$

Mass HF vapor = 20 g/mole x 453.59 g/lb x 0.0061797 lb-mole HF vapor
= 56.06 g HF vapor

Release rate = Q_1' = 56.06 g x (10^3 mg/g) / 15 min x (60 sec/min)
= 62.3 mg/sec

2. Splash Release Source Term

The weight of HF from the tank car splashed into the pit is:

$$\text{Weight HF} = (4400\ \text{gal})\left(\frac{3785\ \text{m}\ell}{\text{gal}}\right)\left(\frac{1080\ \text{mg}}{\text{m}\ell}\right)\left(\frac{0.287\ \text{mg HF}}{\text{mg fluid}}\right) = 5.16\text{E+09 mg HF}$$

The ARF is calculated as above in Case 1:

$$\text{ARF} = 8.9\text{E-10}(\text{Arch})^{0.55}$$

$$\text{Arch} = \frac{(\text{air density})^2\ (\text{spill height})^3\ g}{(\text{solution viscosity})^2}$$

air density = 0.00118 g/cc @ 68°F
spill height = 11 ft = 335 cm
g = gravitational constant = 981 cm/sec^2
viscosity = 0.018 poise = 0.018 g/cm-sec

$$\text{Arch} = \left(\frac{0.00118\ g}{(\text{cm}^3)^2}\right)^2 (335\ \text{cm})^3 \left(\frac{981\ \text{cm}}{\text{sec}^2}\right)\left(\frac{\text{cm-sec}}{(0.018\ g)^2}\right)^2 = 1.585\text{E+08}$$

$$\text{ARF} = 8.9\text{E-10}(1.585\text{E+08})^{0.55} = 2.9\text{E-05 with RF} = 0.6 \text{ as worst case}$$

$$Q_2' = \text{Source term 2} = \frac{5.16\text{E+09 mg HF} \times 2.9\text{E-05} \times 0.6}{(15\ \text{min})(60\ \text{sec/min})} = 99.76\ \text{mg/sec}$$

3. Evaporative Spill Release Source Term

The surface area of the spill in the containment pit will be calculated:

$$\text{HF volume} = \frac{4400\ \text{gal}}{7.48\ \text{gal/ft}^3} = 588.24\ \text{ft}^3 = \tfrac{1}{2}(\text{depth})(\text{length})(\text{width}) = \tfrac{1}{2}(\text{depth})(\text{length})(20\ \text{ft})$$

$$58.824\ \text{ft}^2 = (\text{depth})(\text{length}) \qquad \textbf{Equ. 3}$$

From Equation 2 on page 56, depth = 0.03(length)

Substituting Equ. 2 into Equ. 3 → length = 44.28 ft, depth = 1.33 ft
Maximum HF surface area = 44.28 ft x 20 ft = 886 ft^2

Mass transfer rate = Mass flux x spill surface area
(Mass flux is same as above on page 57) = 0.0105542 lb$_m$/hr/ft^2 x 886 ft^2
= 9.35 lb$_m$/hr

$$Q_3' = (9.35\ \text{lb}_m/\text{hr})(453.6\ \text{g/lb})(10^3\ \text{mg/g})/(3600\ \text{sec/hr}) = 1{,}178\ \text{mg/sec}$$

Figure 7 - Case 2 Source Terms

Q_1' Vapor release	Q_2' Surface splash	Q_3' Evaporation
62.3 mg/sec	99.76 mg/sec	1,178 mg/sec

Downwind concentrations

Total concentration = Instantaneous vapor + splash + continuous pool evaporization

The concentration downwind from this release was estimated by the same Gaussian centerline plume model at ground level as in Case 1. All releases are at ground level.

χ = Downwind centerline concentration = $\dfrac{Q'}{\pi\, \sigma_y\, \sigma_z\, \mu}$

where Q' = Release rate (mg/sec)
σ_y, σ_z = Lateral and vertical diffusion coefficients (m)
μ = Wind speed (m/sec)

Downwind concentration from Source Term 1 - Vapor release

$$\chi_1 \text{ @ } 100 \text{ m (mg/m}^3) = \frac{62.3 \text{ mg/sec}}{\pi(8.2 \text{ m})(4.9 \text{ m})(4.5 \text{ m/sec})} = 0.11 \text{ mg/m}^3 = 0.13 \text{ ppm}$$

$$\chi_1 \text{ @ } 700 \text{ m (mg/m}^3) = \frac{62.3 \text{ mg/sec}}{\pi(53 \text{ m})(25 \text{ m})(4.5 \text{ m/sec})} = 0.0033 \text{ mg/m}^3 = 0.0040 \text{ ppm}$$

Downwind concentration from Source Term 2 - Splash release

$$\chi_2 \text{ @ } 100 \text{ m (mg/m}^3) = \frac{99.76 \text{ mg/sec}}{\pi(8.2 \text{ m})(4.9 \text{ m})(4.5 \text{ m/sec})} = 0.18 \text{ mg/m}^3 = 0.21 \text{ ppm}$$

$$\chi_2 \text{ @ } 700 \text{ m (mg/m}^3) = \frac{99.76 \text{ mg/sec}}{\pi(53 \text{ m})(25 \text{ m})(4.5 \text{ m/sec})} = 0.0053 \text{ mg/m}^3 = 0.0064 \text{ ppm}$$

Downwind concentrations from Source Term 3 - Evaporation release

The downwind concentration from the containment pit evaporation is calculated by using the same virtual source approach as above in Case 1. For a 886 ft^2 pool, one side of a square would be 30 ft or 9.07 m.

For a square source, σ_y = 9.07 m / 4.3 = 2.11 m

$\sigma_y = 2.11 \text{ m} = 0.04\ (x)(1 + 0.0001\ (x))^{1/2}$
Solving for x, $x \approx 53$ m

This distance, x, is added to the target distances, 100 m and 700 m, to calculate each respective σ_y':

$$\sigma_y' \text{ @ } (100 + 53) \text{ m} = 0.04(153)(1+0.0001(153))^{1/2} = 6.17 \text{ m}$$

$$\sigma_y' \text{ @ } (700 + 53) \text{ m} = 0.04(753)(1+0.0001(753))^{1/2} = 31.23 \text{ m}$$

The downwind centerline concentrations are:

$$\chi_3 \text{ @100 m (mg/m}^3) = \frac{1{,}178 \text{ mg/sec}}{\pi(6.17 \text{ m})(4.9 \text{ m})(4.5 \text{ m/sec})} = 2.76 \text{ mg/m}^3 = 3.32 \text{ ppm}$$

$$\chi_3 \text{ @700 m (mg/m}^3) = \frac{1{,}178 \text{ mg/sec}}{\pi(31.23 \text{ m})(25 \text{ m})(4.5 \text{ m/sec})} = 0.11 \text{ mg/m}^3 = 0.13 \text{ ppm}$$

Figure 8 - Case 2 Downwind Centerline Ground-level Concentrations

Downwind Distance	X_1 (ppm) Vapor Release	X_2 (ppm) Surface splash	X_3 (ppm) Evaporation	ΣX (ppm) Total
100 m	0.13	0.21	3.32	3.36
700 m	0.0040	0.0064	0.13	0.28

The hazard classification guidances are shown in Figure 4 on page 18.

Case 3 - Adding neutralization solids to a batch-size of HF in the neutralization tank

Assume:

1. For venting of superheated aqueous solutions > 30° C over the BP, from Mishima p. 3-2, average ARF = 4E-02, RF = 0.7
2. Total batch of HF (143 gal) in tank before water added
3. All vapor released from reaction exits tank
4. Atmosphere - Class D at 100°F and 4.5 m/sec
5. Receptors at 100 m and 700 m
6. Release is instantaneous, but WSRC-MS-92-206 Rev 1 allows 15 min averaging
7. Evaporation of vapor is the only mechanism contributing to downwind concentration
8. Release and receptor are both at ground level
9. No controls to prevent the incident from occurring nor mitigators to decrease the severity of the incident.

$$\text{HF release rate} = \left(\frac{143\ \text{gal fluid}}{15\ \text{min}}\right)\left(\frac{\ \text{min}\ }{60\ \text{sec}}\right)\left(\frac{3785\ \text{m}\ell}{\text{gal}}\right)\left(\frac{1080\ \text{mg}}{\text{m}\ell}\right)\left(\frac{0.287\ \text{mg HF}}{\text{mg fluid}}\right)$$

HF release rate = 186,408 mg HF/sec

Source term = Release rate x ARF x RF

Q′ = Source term = 186,408 mg/sec x 4E-02 x 0.7 = 5,219 mg/sec

From TID-24190:

@ 100 m: σ_y = 8.2 m, σ_z = 4.9 m
@ 700 m: σ_y = 53.0 m, σ_z = 25.0 m

$$\chi = \text{Downwind centerline concentration} = \frac{Q'}{\pi\, \sigma_y\, \sigma_z\, \mu}$$

where

Q′	=	Release rate (mg/sec)
σ_y, σ_z	=	Lateral and vertical diffusion coefficients (m)
μ	=	Wind speed (m/sec)

Downwind concentration from vapor release

$$\chi \text{ @ } 100 \text{ m } (mg/m^3) = \frac{5219 \text{ mg/sec}}{\pi \times 8.2 \text{ m} \times 4.9 \text{ m} \times 4.5 \text{ m/sec}} = 9.19 \text{ mg/m}^3 = 11.1 \text{ ppm}$$

$$\chi \text{ @ } 700 \text{ m } (mg/m^3) = \frac{5219 \text{ mg/sec}}{\pi \times 53 \text{ m} \times 25 \text{ m} \times 4.5 \text{ m/sec}} = 0.28 \text{ mg/m}^3 = 0.34 \text{ ppm}$$

Summary of Accident Analysis

Downwind Centerline Ground Level HF Concentrations

Downwind distance (m)	Case 1 - HF pump/pipe flange failure	Case 2 - HF tank car failure	Case 3 - Out of sequence addition of lime to HF in tank
100	0.70 ppm	3.36 ppm	11.1 ppm
700	0.02 ppm	0.28 ppm	0.34 ppm

Case 3 is the feasible accident with the bounding magnitude that may occur with HF processing assuming no controls and mitigators.

Appendix D - Design Criteria

The *Installation Specifications and Requirements*[8] and Section 4.0, System Design, of the *Conceptual System Implementation Plan*[9] provide all design criteria for the neutralization process facility. The Safety Analysis Department has reviewed these two documents and recommended revisions to them which have been satisfactorily dispositioned. The HAZOP Team provided several recommendations which have been implemented in the design criteria. These include:

1. Verify the proper destination of the discharge piping from Catch Basins (CB) in and near the Tank Farm. If they drain to the stormsewer system, then place dams of soil around the drains to prevent an HF spill from getting into the stormsewer.

2. Place signs and barriers around the process area to prevent non-HF remedial personnel from entering the area.

3. Clearly label all valves and equipment consistent with procedures, plans and drawings.

4. Place containment material on the east side of the Tank Farm adjacent to the neutralization tank's incoming piping to keep a potential HF liquid release from the piping inside the secondary containment and off the gravel area.

5. Add an audible alarm to warn of high temperature, high level or low pH in the neutralization tank to alert the operator of these abnormal conditions.

6. Place acid-indicator jackets around all HF pipe, valves, pump and flange connections to help in identifying leaks.

8. Provide periodic vertical support (every 10 ft ±) for the new HF piping suspended between the HF tank car and the tie-in with the existing piping to limit the potential effect of vibration on the piping from the pump.

9. Add a 3-way valve or connection to allow water purging of all components containing HF.

Secondary containment design is in accordance with 40 CFR Part 265 of RCRA.

The existing 1" and 2" PTFE-lined piping being used for the system will meet ASTM A587. These flanges, fittings and reducers will meet ASTM A395.

New 1" and 2" Schedule 80 kynar piping will meet ASTM D3222 and D1785. New fittings will meet ASTM D2467. Fabrication and installation will meet ASME B31.3, Code for Chemical Plant and Petroleum Refinery Piping, Category D fluid service.

The neutralization tank is built per American Petroleum Institute API-650 Appendix J. The top, bottom and shell is 1/4" nominal A-36 steel, flanges are A-105 steel. The tank is rated for atmospheric design pressure, and is lined with 3/16" thick chlorobutyl rubber.

Appendix E

HF Tank Car Closure Neutralization Process

Fault Tree Analysis

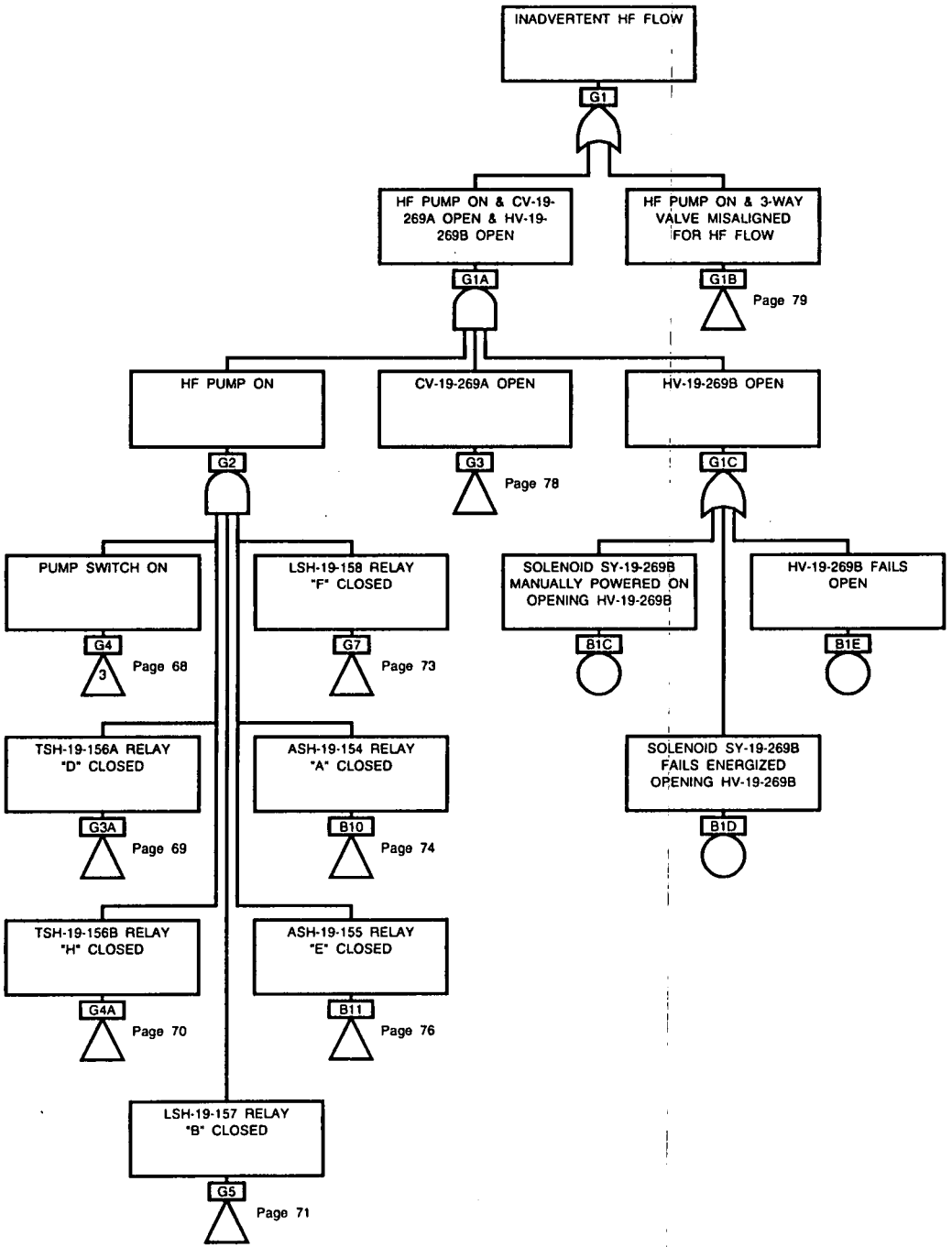

INADVERTENT HF FLOW	HF.CAF	10-18-94	Page 67

000075

2018

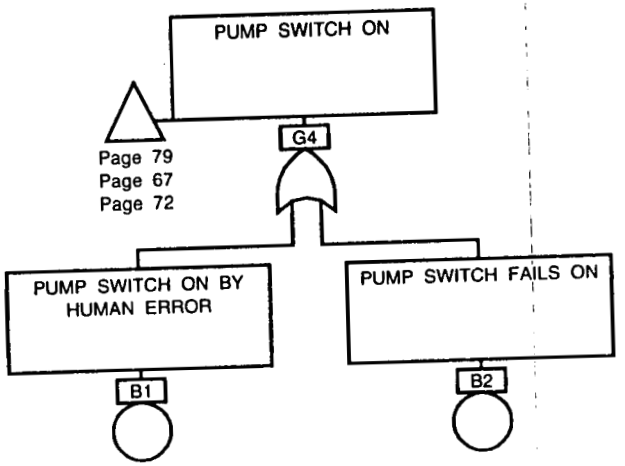

INADVERTENT HF FLOW | HF.CAF | 10-18-94 | Page 68

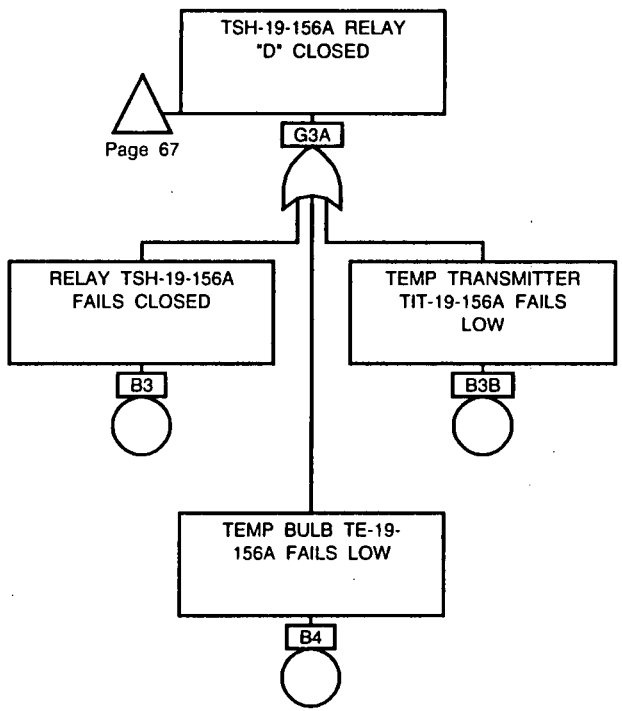

INADVERTENT HF FLOW	HF.CAF	10-18-94	Page 69

000077

7018

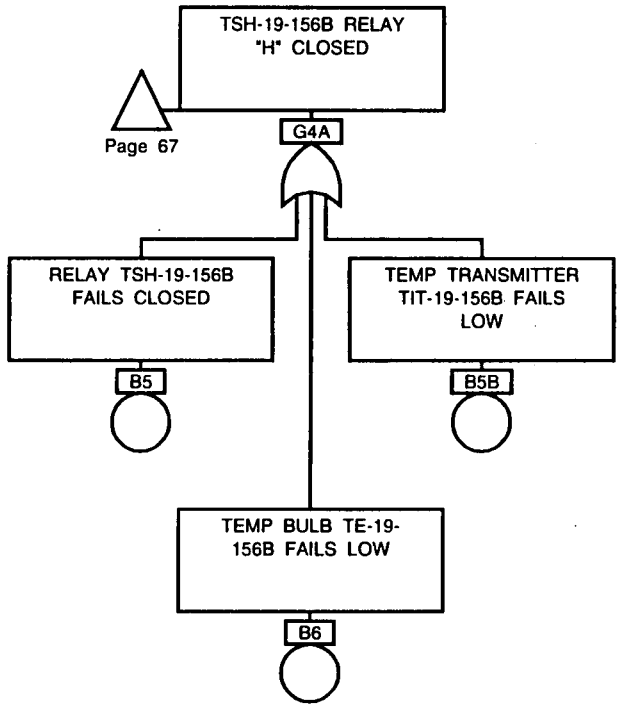

INADVERTENT HF FLOW	HF.CAF	10-18-94	Page 70

000028

7018

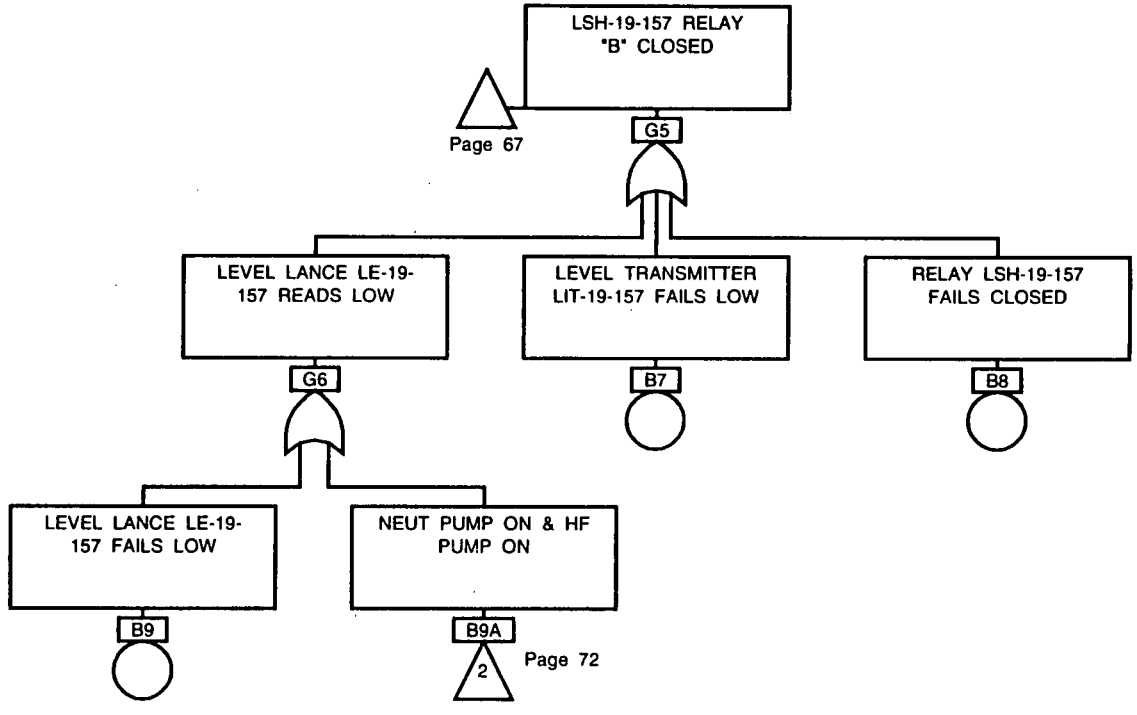
LSH-19-157 RELAY "B" CLOSED
Page 67
G5
LEVEL LANCE LE-19-157 READS LOW
LEVEL TRANSMITTER LIT-19-157 FAILS LOW
RELAY LSH-19-157 FAILS CLOSED
G6
B7
B8
LEVEL LANCE LE-19-157 FAILS LOW
NEUT PUMP ON & HF PUMP ON
B9
B9A
2
Page 72

620000
7018

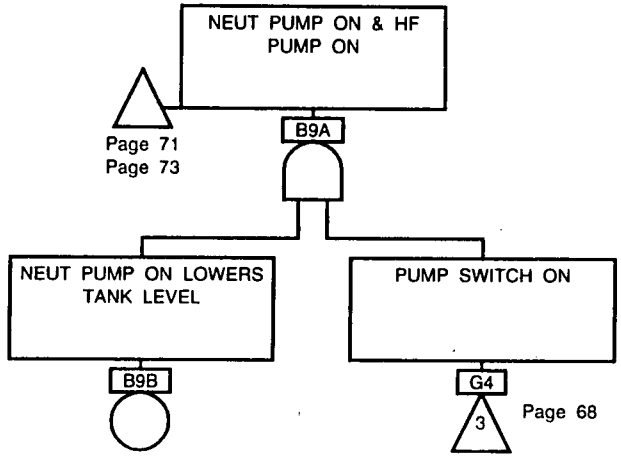

INADVERTENT HF FLOW	HF.CAF	10-18-94	Page 72

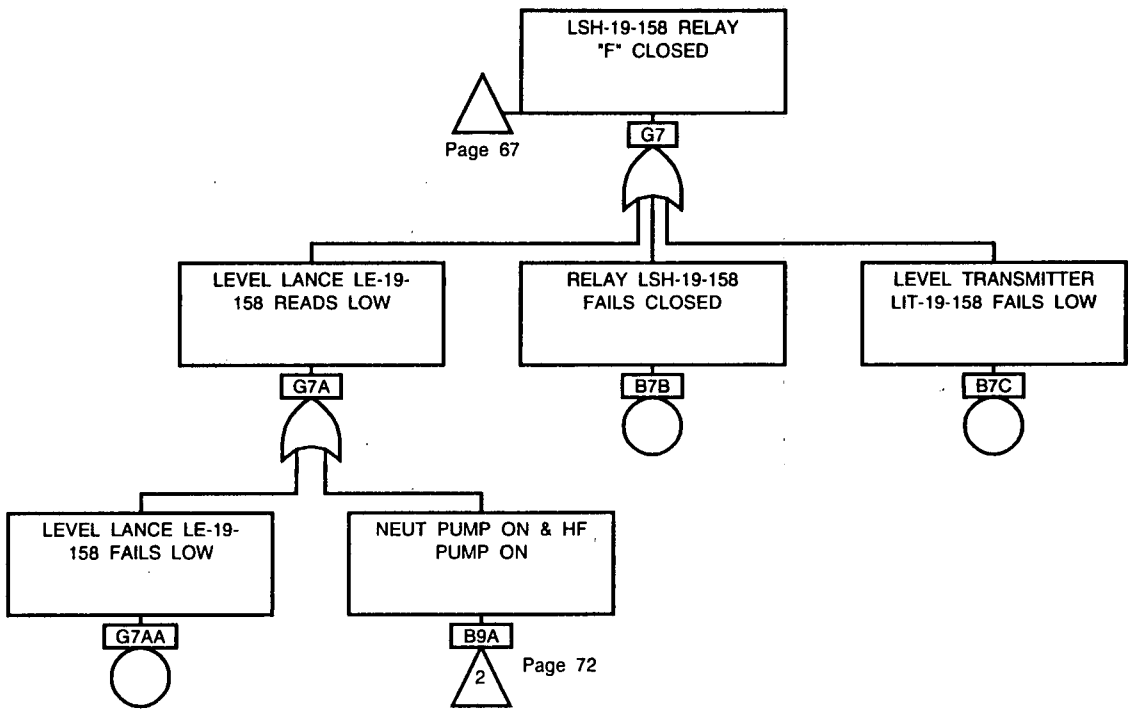

INADVERTENT HF FLOW	HF.CAF	10-18-94	Page 73

000081

7018

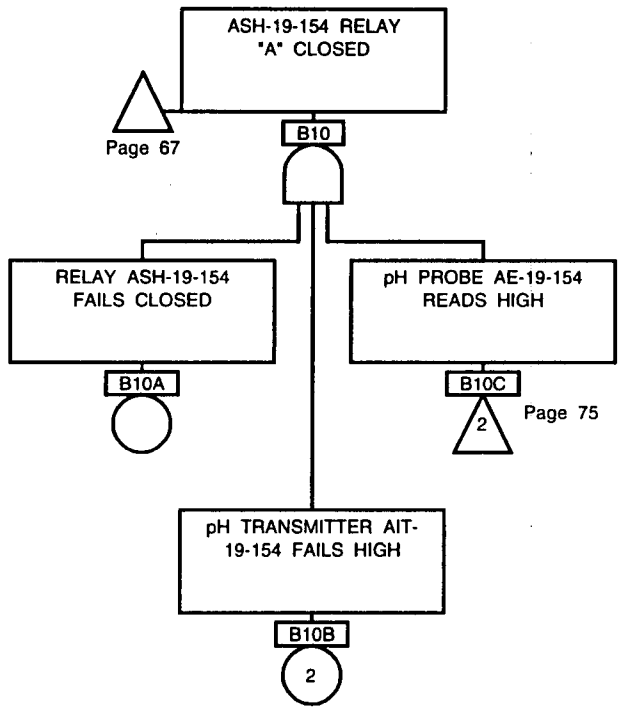

INADVERTENT HF FLOW	HF.CAF	10-18-94	Page 74

280000

7018

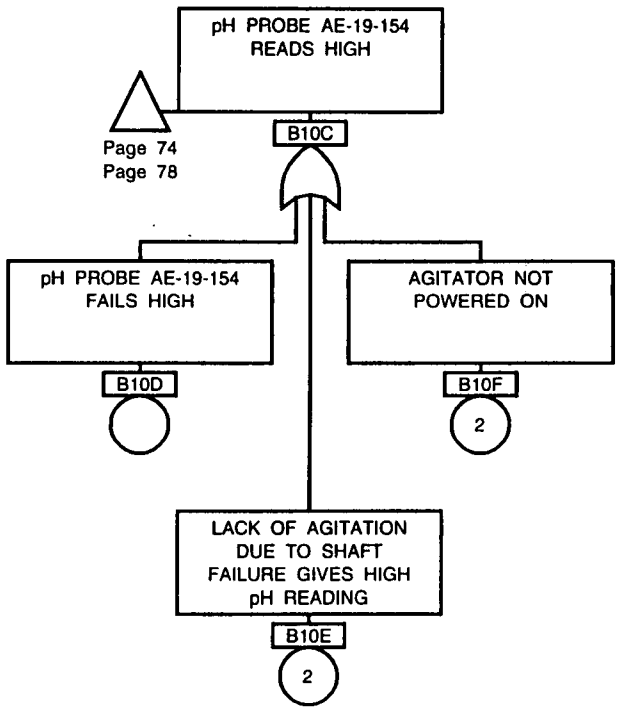

INADVERTENT HF FLOW	HF.CAF	10-18-94	Page 75

000083

7018

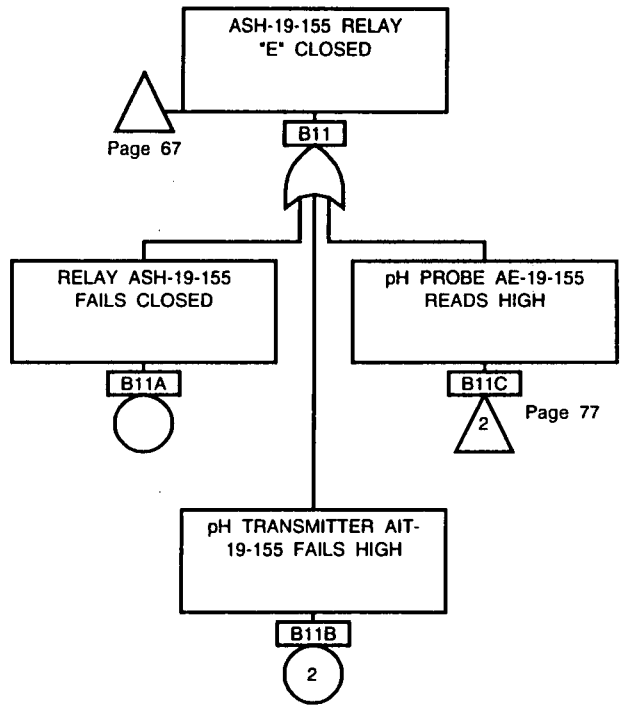

INADVERTENT HF FLOW	HF.CAF	10-18-94	Page 76

000084

7018

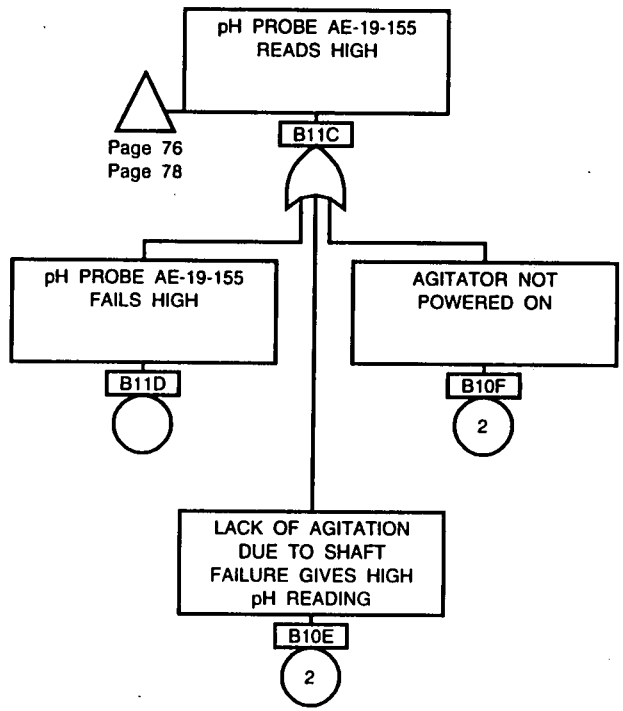

INADVERTENT HF FLOW	HF.CAF	10-18-94	Page 77

000085

7018

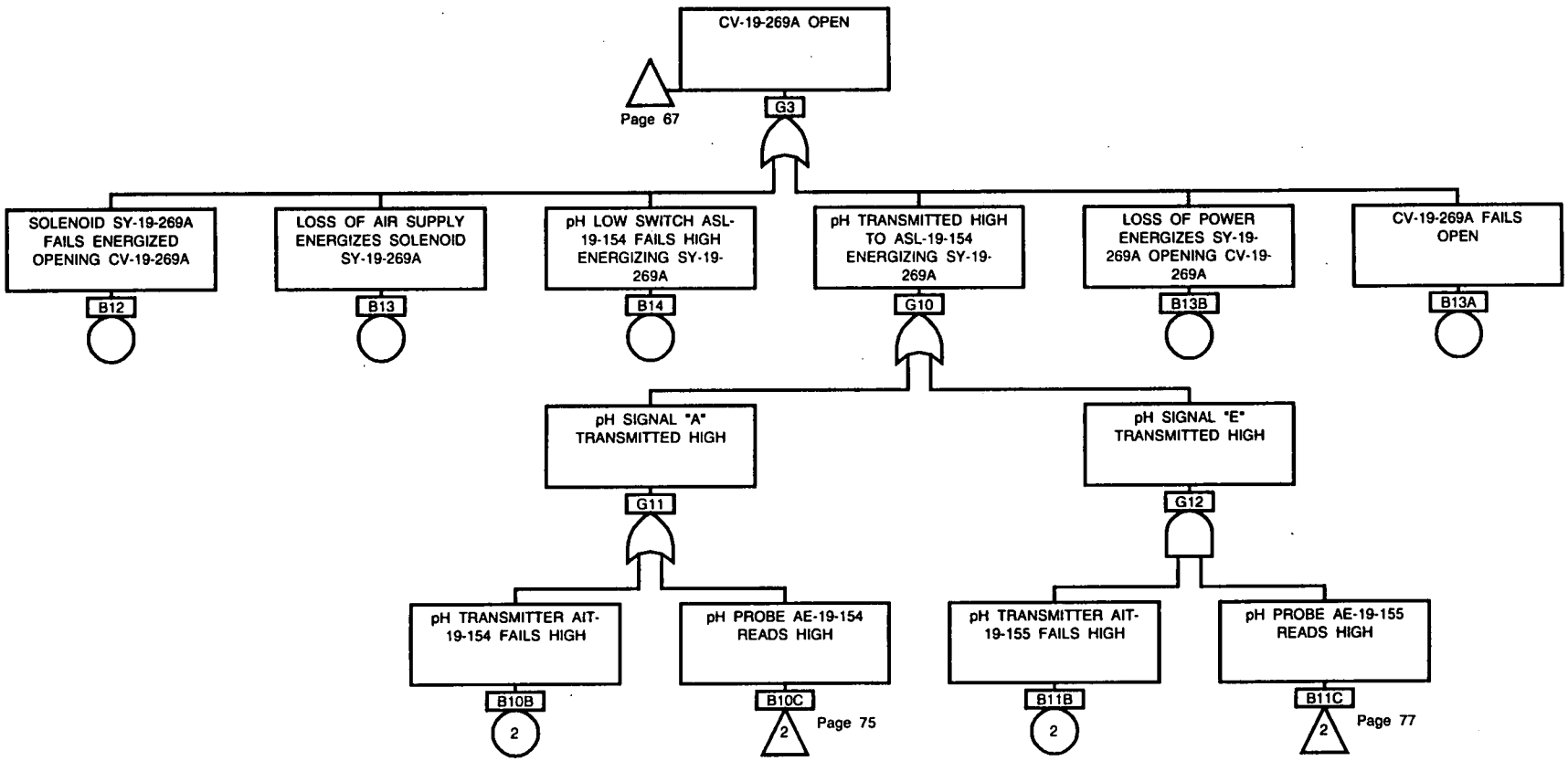

INADVERTENT HF FLOW	HF.CAF	10-18-94	Page 78

000086

7018

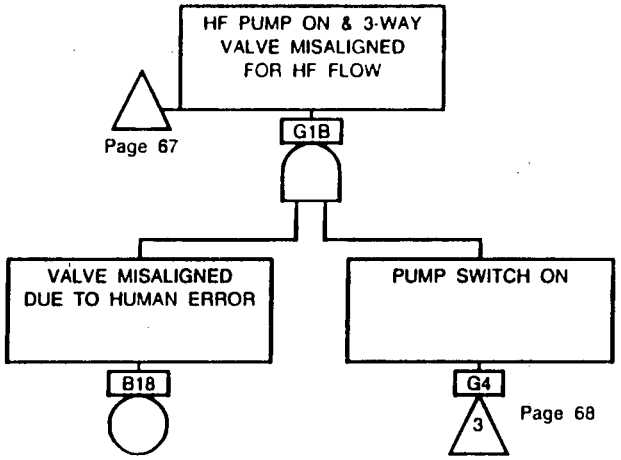
HF PUMP ON & 3-WAY VALVE MISALIGNED FOR HF FLOW
Page 67
G1B
VALVE MISALIGNED DUE TO HUMAN ERROR
PUMP SWITCH ON
B18
G4
3
Page 68

000087
7018