7201 G-000-104.189

RENEWAL OF PERMITS TO OPERATE AT THE FERNALD ENVIRONMENTAL MANAGEMENT PROJECT OEPA ID. NOS 1431110128 P239, P240, P248, P276, T045 AND T046

09/29/95

C:EC:95-0134
FERMCO HAMILTON COUNTY
60
PERMITS

7201

Fernald Environmental

FERMCO

Restoration Management Corporation P.O. Box 398704 Cincinnati, Ohio 45239-8704 (513) 738-6200

September 29, 1995

Fernald Environmental Management Project
Letter No. C:EC:95-0134

Mr. Peter Sturdevant, Compliance Specialist
Air Quality Management Division
Hamilton County Department
of Environmental Services
1632 Central Parkway
Cincinnati, Ohio 45210

Dear Mr. Sturdevant:

RENEWAL OF PERMITS TO OPERATE AT THE FERNALD ENVIRONMENTAL MANAGEMENT PROJECT OEPA ID. NOs. 1431110128 P239, P240, P248, P276, T045 AND T046

Enclosed are six FEMP Permit to Operate renewal applications for those permits which are scheduled to expire in December 1995.

Please contact Kip Klee of my staff at 648-5289 if you have any questions about these applications.

Sincerely,

Terence D. Hagen
Director
Environmental Compliance

TDH:KOK:mhv
Enclosures

c: S. M. Beckman, FERMCO/MS65-2 - w/o enclosures
K. O. Klee, FERMCO/MS65-2 - w/o enclosures
C. Glassmeyer, FERMCO/MS75 - w/o enclosures
P. B. Spotts, FERMCO/MS65-2 - w/o enclosures
W. J. Quaider, DOE-FN/MS45
AR Coordinator
File Record Storage Copy 108.6
RTS Files (PTOs P239, P240, P248, P276, T045, T046)

E 7201

OHIO ENVIRONMENTAL PROTECTION AGENCY
APPLICATION FOR A PERMIT TO OPERATE AN AIR CONTAMINANT SOURCE

D.O.E.-Fernald Environmental Management Project
Facility Name

Mr. Stephen M. Beckman
Person to Contact

7400 Willey Road
Facility Address

Post Office Box 538704
Mailing Address

Fernald — Hamilton — 45030
City — County — Zip

Cincinnati — OH — 45253-8704
City — State — Zip

513/ 648-3000
Telephone — Area — Number

513/ 648-5264
Telephone

#1431110128- P239
(Application no., if this is a renewal application)

4953
Std. Ind. Class. Code

1. Complete and attach any of the following appendices most appropriate to the air contaminant source. In addition, a compliance time schedule form is to be attached when applicable. Check as appropriate the following:

- X Appendix A, Process
- ___ Appendix B, Fuel-Burning Equipment
- ___ Appendix C, Incinerator
- ___ Appendix D, Surface Coating or Printing Operation
- ___ Appendix E, Storage Tank
- ___ Appendix H, Gasoline Dispensing Facility
- ___ Appendix J, Loading Rack at Bulk Gasoline Plant or Terminal
- ___ Appendix K, Surface Coating Line or Printing Line
- ___ Appendix L, Solvent Metal Cleaning
- ___ Appendix M, Fugitive Dust Emission Sources
- ___ Specify Appendix No.
- ___ Appendix N, Rubber Tire Manufacturing
- ___ Appendix O, Dry Cleaning Facility
- ___ Appendix P, Landfills
- ___ Other Appendix ___
- ___ Compliance Time Schedule

2. Description of Source (same as used on appendix): Plant 8 - East Oliver Filter

3. Your identification for Source (same as used on appendix): 8-009

I, being the individual specified in Rule 3745-35-02(B) of the Ohio Administrative Code, hereby apply for a Permit to Operate the air contaminant source(s) described herein. As required, the following additional documents are submitted as part of this application (describe all attachments):

Attachments:
- Appendix A
- Process Flow Diagram
- Emission Calculations
- NESHAP Subpart H Calculations

Authorized Signature*
Terence D. Hagen
Director Environmental Compliance
Title
9/29/95
Date

000002

*Pursuant to OAC Rule 3745-35-02(B) (Permit to Operate).
Operation of an air contaminant source without an effective permit to operate is prohibited to 3704.05 Ohio Revised Code.

For Official Use Only

Premise No. / / /
Source No. /
Application No. /

OEPA NO. 1431110128 P239
A-1
FEMP ID NO. 8-009

APPENDIX A, PROCESS

PROCESS DATA

1. Name of process Plant 8 - East Oliver Filter

2. End product of this process Slag Leach Filter Cake, Neutralized Sump Cake and Filtrate

3. Primary process equipment East Oliver Vacuum Filter

Your identification 8-009 Year Installed 1955

4. Manufacturer Oliver (Used Eimco parts to repair Oliver Filter) Make or Model Unknown

5. Capacity of equipment (lbs./hr): Rated 16,660 Max. 24,990

6. Method of exhaust ventilation: [X] Stack [ ] Window fan [ ] Roof vent
[ ] Other, describe
Are there multiple exhausts? [ ] Yes [X] No

OPERATING DATA

7. Normal operating schedule: 24 hrs./day, 5 days/wk., 50 wks./year.

8. Percent annual production (finished units) by season:
Winter 25 Spring 25 Summer 25 Fall 25

9. Hourly production rates (lbs.): Average 16,660 Maximum 24,990

10. Annual production (indicate units) 12,375,000 gallons
projected percent annual increase in production -0-

11. Type of operation: [X] Continuous [ ] Batch

12. If batch, indicate Minutes per cycle _____ Minutes between cycles _____

13. Materials used in process:

List of Raw Materials	Principal Use	Amount (lbs./hr.)
Slag Leach Slurry and	To be filtered	16,660
Neutralized Sump Liquor		
Dicalite & water slurry	Filter precoat	1500 gal/day (as needed)

14. A PROCESS FLOW DIAGRAM MUST BE INCLUDED WITH THIS APPENDIX. Show entry and exit points of all raw materials, intermediate products, by products and finished products. Label all materials including airborne contaminants and other waste materials. Label the process equipment.

See attached Process Flow Diagram

OEPA NO. 1431110128 P239
FEMP ID NO. 8-009

CONTROL EQUIPMENT

Control Equipment Code:

(A) Settling Chamber
(B) Cyclone
(C) Multiple Cyclone
(D) Electrostatic Precipitator
(E) Fabric Filter
(F) Spray Chamber
(G) Cyclonic Scrubber
(H) Impingement Scrubber
(I) Orifice Scrubber
(J) Venturi Scrubber
(K) Plate or Tray Tower
(L) Packing Tower
(M) Adsorber
(N) Condenser
(O) Afterburner - Catalytic
(P) Afterburner - Thermal
(Q) Other, Describe_____

15. Control Equipment Data: N/A

Item	Primary Collector	Secondary Collector
(a) Type (See above Code)		
(b) Manufacturer		
(c) Model No.		
(d) Year Installed		
(e) Your Identification		
(f) Pollutant Controlled		
(g) Controlled pollutant emission rate (if known)		
(h) Pressure Drop		
(i) Design efficiency		
(j) Operating efficiency		

STACK DATA

16. Your Stack Identification East Oliver Vacuum Pump Exhaust (EP8-013)

17. Are other sources vented to this stack? [ ] Yes [X] No
If yes, identify sources_____

18. Type: [X] Round, top inside diameter dimension 10 inches
[ ] Rectangular, top inside dimensions (L)_____ X (W)_____

19. Height: Above roof 2 ft., above ground 45 ft.

20. Exit gas: Temp. Amb. °F, Volume 1200 ACFM, Velocity 2200 ft./min.

21. Continuous monitoring equipment: [ ] Yes [X] No
If yes, indicate : Type _____, Manufacturer _____

Make or Model _____, Pollutant(s) monitored _____

22. Emission data: Emissions from this source have been determined and such data is included with this appendix: [X] Yes [ ] No
If yes, check method: [X] Stack Test [X] Emission Factor [ ] Material Balance

Completed by Kip Klee, Date 08/17/95

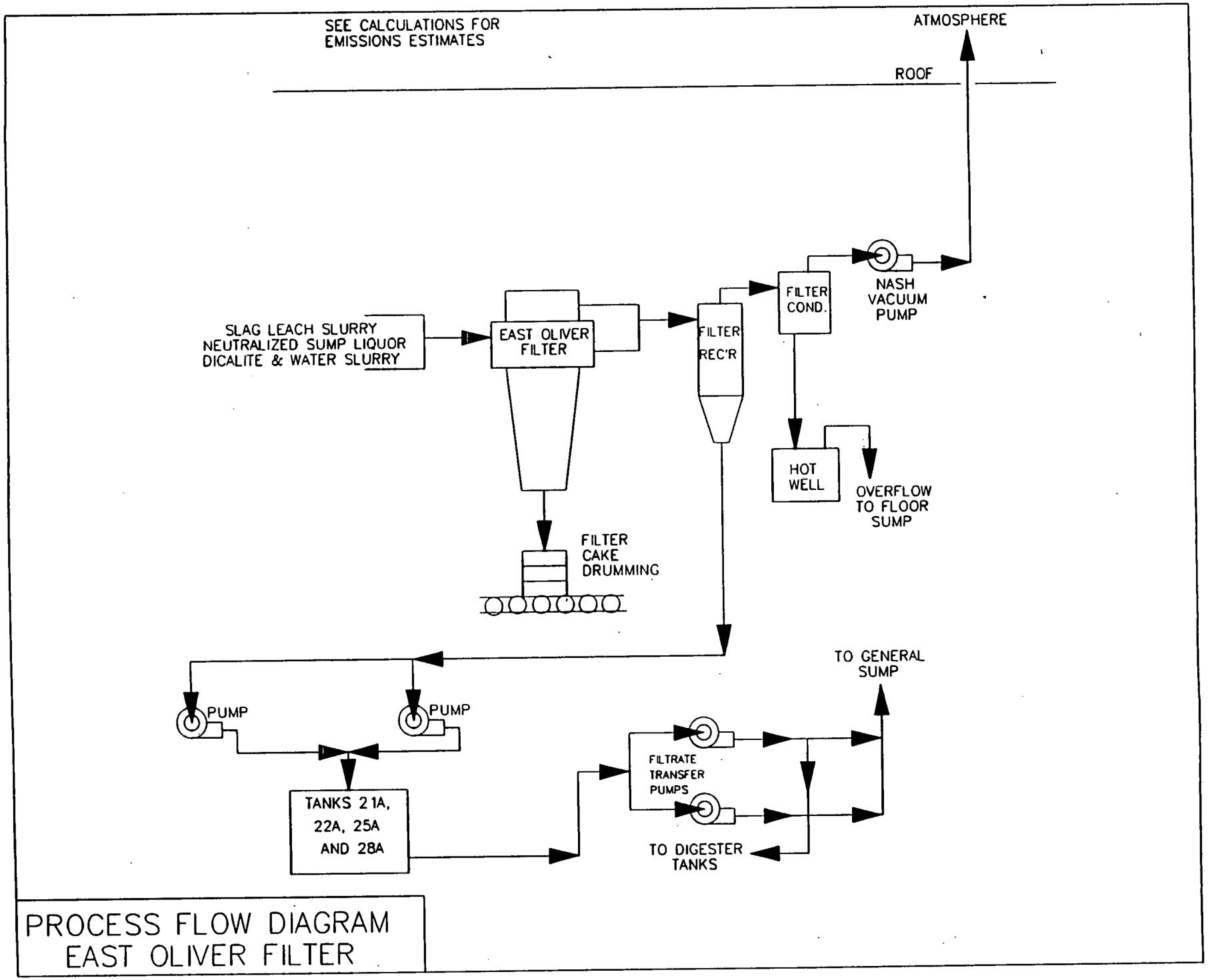
SEE CALCULATIONS FOR
EMISSIONS ESTIMATES
ATMOSPHERE
ROOF
SLAG LEACH SLURRY
NEUTRALIZED SUMP LIQUOR
DICALITE & WATER SLURRY
EAST OLIVER
FILTER
FILTER
REC'R
FILTER
COND.
NASH
VACUUM
PUMP
HOT
WELL
OVERFLOW
TO FLOOR
SUMP
FILTER
CAKE
DRUMMING
TO GENERAL
SUMP
PUMP
PUMP
FILTRATE
TRANSFER
PUMPS
TANKS 21A,
22A, 25A
AND 28A
TO DIGESTER
TANKS
PROCESS FLOW DIAGRAM
EAST OLIVER FILTER

000065

URANIUM AND PARTICULATE EMISSIONS FROM THE
PLANT 8 EAST OLIVER VACUUM FILTER VACUUM PUMP

1. EMISSION SUMMARY

EMISSIONS	PARTICULATE		URANIUM	
	Lbs/hr	Tons/yr	Lbs/hr	Tons/yr
ACTUAL	5.00E-03	1.50E-02	4.48E-04	1.34E-03
POTENTIAL	7.50E-03	3.29E-02	6.72E-04	2.94E-03
UNCONTROLLED POTENTIAL	7.50E-03	3.29E-02	6.72E-04	2.94E-03
ALLOWABLE	22.3	97.5	6.72E-04	2.94E-03

2. ASSUMPTIONS and TEST DATA

A. Estimated emissions are based on the results of the stack test performed on May 10, 1995 by the Hayden Environmental Group, Inc. Flow through the system during the stack test was approximately 2000 gallons/hour. Results of the stack test indicate uranium emissions of 4.48E-04 lb/hr and a total particulate release rate of 5.00E-03 lb/hr.

B. Normal operating hours are 6000 hours per year; Potential operating hours are 8760 hours per year.

C. The vacuum filter normally processes 2000 gallons/hour of material and has a maximum of 3000 gallons/hour.

D. Potential emissions are assumed to be proportional the flow rates through the system and are estimated to be 1.5 times normal emissions.

3. URANIUM EMISSIONS

A. Actual uranium emissions:

U = 4.48E-04 lb/hr (from stack test)

$$\frac{4.48E\text{-}04\ \text{lb U}}{\text{hour}} \left| \frac{6000\ \text{hrs}}{\text{year}} \right| \frac{1\ \text{ton}}{2000\ \text{lbs}} = 1.34E\text{-}04\ \frac{\text{tons U}}{\text{year}}$$

B. Potential uranium emissions:

$$\frac{4.48E\text{-}04\ \text{lb U}}{\text{hr}} \left| 1.5 \right| = 6.72E\text{-}04\ \frac{\text{lb U}}{\text{hr}}$$

$$\frac{6.72E\text{-}04\ \text{lb U}}{\text{hour}} \left| \frac{8760\ \text{hrs}}{\text{year}} \right| \frac{1\ \text{ton}}{2000\ \text{lbs}} = 2.94E\text{-}03\ \frac{\text{tons U}}{\text{year}}$$

C. Uncontrolled potential uranium emissions:

Since there is no control equipment on this stack, the uncontrolled potential emissions will equal the potential emissions.

D. Allowable uranium emissions:

The allowable uranium emissions are equal to the potential uranium emissions.

---

4. PARTICULATE (PM) EMISSIONS

A. Actual particulate (PM) emissions:

PM = 5.00E-03 lb/hr (from stack test)

$$\frac{5.00E\text{-}03\ \text{lb PM}}{\text{hr}} \left| \frac{6000\ \text{hrs}}{\text{year}} \right| \frac{1\ \text{ton}}{2000\ \text{lbs}} = 1.50E\text{-}02\ \frac{\text{tons PM}}{\text{year}}$$

B. Potential particulate emissions:

$$\frac{5.00\text{-}03\ \text{lb U}}{\text{hour}} \left| \frac{1.5}{} \right| = 7.50E\text{-}03\ \frac{\text{lb PM}}{\text{hr}}$$

$$\frac{7.50E\text{-}03\ \text{lb PM}}{\text{hour}} \left| \frac{8760\ \text{hrs}}{\text{year}} \right| \frac{1\ \text{ton}}{2000\ \text{lbs}} = 3.29E\text{-}02\ \frac{\text{tons PM}}{\text{year}}$$

C. Uncontrolled potential particulate emissions:

Since there is no control equipment on this stack, the uncontrolled potential emissions will equal the potential emissions.

D. Allowable particulate emissions:

Process weight rate (P) in tons/hr:

$$\frac{3000\ \text{gal}}{\text{hour}} \left| \frac{8.33\ \text{lb}}{\text{gal}} \right| \frac{1\ \text{ton}}{2000\ \text{lbs}} = 12.5\ \frac{\text{tons}}{\text{hour}}$$

From Table I of the Ohio Administrative Code 3745-17-11:

Allowable emissions (E) in lbs/hr:

$$E = 4.10(P)^{0.67} = 4.10(12.5)^{0.67} = 22.3\ \text{lbs PM/hour}$$

$$\frac{22.3\ \text{lb}}{\text{hour}} \left| \frac{8760\ \text{hrs}}{\text{year}} \right| \frac{1\ \text{ton}}{2000\ \text{lbs}} = 97.5\ \frac{\text{tons PM}}{\text{year}}$$

CAP88-PC

Version 1.00

Clean Air Act Assessment Package - 1988

SYNOPSIS REPORT

Non-Radon Individual Assessment
Aug 22, 1995 8:26 am

Facility: FERNALD ENVIRONMENTAL MANAGEMENT PROJECT
Address: P.O. BOX 538704
7400 WILLEY ROAD
City: CINCINNATI
State: OH Zip: 45253-8704

Effective Dose Equivalent
(mrem/year)

1.83E-02

At This Location: 969 Meters North Northeast

Source Category: REMEDIATION SITE
Source Type: Stack
Emission Year: 1994

Comments: Plant 8 East Oliver Vacuum pump exhaust
Monitor assessment

Dataset Name: P239-G1
Dataset Date: Aug 22, 1995 8:20 am
Wind File: WNDFILES\FEMPSTD.WND

MAXIMALLY EXPOSED INDIVIDUAL

Location Of The Individual: 969 Meters North Northeast
Lifetime Fatal Cancer Risk: 2.38E-07

ORGAN DOSE EQUIVALENT SUMMARY

Organ	Dose Equivalent (mrem/y)
GONADS	5.93E-05
BREAST	6.77E-05
R MAR	1.45E-03
LUNGS	1.42E-01
THYROID	5.78E-05
ENDOST	2.02E-02
RMNDR	1.59E-03
EFFEC	1.83E-02

RADIONUCLIDE EMISSIONS DURING THE YEAR 1994

Nuclide	Class	Size	Source #1 Ci/y	TOTAL Ci/y
RA-226	W	1.00	2.6E-07	2.6E-07
RA-228	W	1.00	1.0E-06	1.0E-06
TH-228	Y	1.00	1.1E-05	1.1E-05
TH-230	Y	1.00	7.7E-07	7.7E-07
TH-232	Y	1.00	1.7E-06	1.7E-06
U-234	Y	1.00	2.9E-04	2.9E-04
U-235	Y	1.00	1.5E-05	1.5E-05
U-236	Y	1.00	1.5E-05	1.5E-05
U-238	Y	1.00	3.8E-04	3.8E-04
AC-228	Y	1.00	1.0E-06	1.0E-06
RA-224	W	1.00	1.1E-05	1.1E-05
TH-231	Y	1.00	7.3E-08	7.3E-08
TH-234	Y	1.00	3.8E-04	3.8E-04

SITE INFORMATION

Temperature:	12 degrees C
Precipitation:	98 cm/y
Mixing Height:	950 m

SOURCE INFORMATION

Source Number:	1
Stack Height (m):	13.72
Diameter (m):	0.25
Plume Rise Momentum (m/s): (Exit Velocity)	1.12E+01

AGRICULTURAL DATA

	Vegetable	Milk	Meat
Fraction Home Produced:	0.700	0.399	0.442
Fraction From Assessment Area:	0.300	0.601	0.558
Fraction Imported:	0.000	0.000	0.000

Food Arrays were not generated for this run.
Default Values used.

DISTANCES USED FOR MAXIMUM INDIVIDUAL ASSESSMENT

1252	1207	1926	1561	1265	969	1070	1137	1171	1312
1308	1318	1238	1236	1850	1382	1190	1186	1731	1695

C A P 8 8 - P C

Version 1.00

Clean Air Act Assessment Package - 1988

D O S E A N D R I S K E Q U I V A L E N T S U M M A R I E S

Non-Radon Individual Assessment
Aug 22, 1995 8:26 am

Facility: FERNALD ENVIRONMENTAL MANAGEMENT PROJECT
Address: P.O. BOX 538704
7400 WILLEY ROAD
City: CINCINNATI
State: OH Zip: 45253-8704

Source Category: REMEDIATION SITE
Source Type: Stack
Emission Year: 1994

Comments: Plant 8 East Oliver Vacuum pump exhaust

Dataset Name: P239-G1
Dataset Date: Aug 22, 1995 8:20 am
Wind File: WNDFILES\FEMPSTD.WND

ORGAN DOSE EQUIVALENT SUMMARY

Organ	Selected Individual (mrem/y)
GONADS	5.93E-05
BREAST	6.77E-05
R MAR	1.45E-03
LUNGS	1.42E-01
THYROID	5.78E-05
ENDOST	2.02E-02
RMNDR	1.59E-03
EFFEC	1.83E-02

PATHWAY EFFECTIVE DOSE EQUIVALENT SUMMARY

Pathway	Selected Individual (mrem/y)
INGESTION	1.15E-03
INHALATION	1.71E-02
AIR IMMERSION	7.51E-10
GROUND SURFACE	1.16E-05
INTERNAL	1.83E-02
EXTERNAL	1.16E-05
TOTAL	1.83E-02

NUCLIDE EFFECTIVE DOSE EQUIVALENT SUMMARY

Nuclide	Selected Individual (mrem/y)
RA-226	9.76E-07
RA-228	1.59E-06
TH-228	5.30E-04
TH-230	3.72E-05
TH-232	1.19E-04
U-234	7.72E-03
U-235	3.93E-04
U-236	3.81E-04
U-238	9.08E-03
AC-228	1.72E-08
RA-224	7.46E-06
TH-231	1.42E-11
TH-234	6.26E-06
TOTAL	1.83E-02

CANCER RISK SUMMARY

Cancer	Selected Individual Total Lifetime Fatal Cancer Risk
LEUKEMIA	1.63E-09
BONE	1.07E-09
THYROID	1.33E-11
BREAST	1.51E-10
LUNG	2.31E-07
STOMACH	9.22E-11
BOWEL	1.66E-10
LIVER	9.48E-11
PANCREAS	5.86E-11
URINARY	3.41E-09
OTHER	7.17E-11
TOTAL	2.38E-07

PATHWAY RISK SUMMARY

Pathway	Selected Individual Total Lifetime Fatal Cancer Risk
INGESTION	6.12E-09
INHALATION	2.32E-07
AIR IMMERSION	1.71E-14
GROUND SURFACE	2.65E-10
INTERNAL	2.38E-07
EXTERNAL	2.65E-10
TOTAL	2.38E-07

NUCLIDE RISK SUMMARY

Nuclide	Selected Individual Total Lifetime Fatal Cancer Risk
RA-226	1.26E-11
RA-228	1.59E-11
TH-228	1.06E-08
TH-230	3.04E-10
TH-232	6.71E-10
U-234	9.88E-08
U-235	5.15E-09
U-236	4.88E-09
U-238	1.17E-07
AC-228	3.46E-13
RA-224	1.67E-10
TH-231	4.13E-16
TH-234	1.92E-10
TOTAL	2.38E-07

INDIVIDUAL EFFECTIVE DOSE EQUIVALENT RATE (mrem/y)
(All Radionuclides and Pathways)

Direction	Distance (m) 1252	1207	1926	1561	1265	969	1070
N	6.9E-03	7.3E-03	3.6E-03	4.9E-03	6.8E-03	1.0E-02	8.7E-03
NNW	3.0E-03	3.1E-03	1.6E-03	2.2E-03	2.9E-03	4.2E-03	3.7E-03
NW	2.4E-03	2.5E-03	1.3E-03	1.7E-03	2.3E-03	3.4E-03	2.9E-03
WNW	2.1E-03	2.2E-03	1.2E-03	1.5E-03	2.1E-03	3.0E-03	2.6E-03
W	2.7E-03	2.9E-03	1.5E-03	2.0E-03	2.7E-03	3.9E-03	3.4E-03
WSW	8.4E-03	8.8E-03	4.4E-03	6.0E-03	8.2E-03	1.2E-02	1.1E-02
SW	5.2E-03	5.4E-03	2.8E-03	3.7E-03	5.1E-03	7.5E-03	6.5E-03
SSW	7.7E-03	8.2E-03	4.0E-03	5.5E-03	7.6E-03	1.1E-02	9.8E-03
S	6.8E-03	7.2E-03	3.6E-03	4.9E-03	6.7E-03	1.0E-02	8.6E-03
SSE	6.8E-03	7.2E-03	3.5E-03	4.8E-03	6.7E-03	1.0E-02	8.6E-03
SE	5.1E-03	5.3E-03	2.8E-03	3.7E-03	5.0E-03	7.3E-03	6.3E-03
ESE	8.3E-03	8.7E-03	4.3E-03	5.9E-03	8.1E-03	1.2E-02	1.0E-02
E	5.7E-03	6.0E-03	3.0E-03	4.1E-03	5.6E-03	8.5E-03	7.3E-03
ENE	6.6E-03	7.0E-03	3.5E-03	4.8E-03	6.5E-03	9.7E-03	8.4E-03
NE	7.3E-03	7.8E-03	3.8E-03	5.3E-03	7.2E-03	1.1E-02	9.3E-03
NNE	1.3E-02	1.3E-02	6.7E-03	9.1E-03	1.2E-02	1.8E-02	1.6E-02

Direction	Distance (m) 1137	1171	1312	1308	1318	1238	1236
N	8.0E-03	7.6E-03	6.4E-03	6.5E-03	6.4E-03	7.0E-03	7.0E-03
NNW	3.4E-03	3.2E-03	2.8E-03	2.8E-03	2.8E-03	3.0E-03	3.0E-03
NW	2.7E-03	2.6E-03	2.2E-03	2.2E-03	2.2E-03	2.4E-03	2.4E-03
WNW	2.4E-03	2.3E-03	2.0E-03	2.0E-03	1.9E-03	2.1E-03	2.1E-03
W	3.1E-03	3.0E-03	2.6E-03	2.6E-03	2.6E-03	2.8E-03	2.8E-03
WSW	9.6E-03	9.2E-03	7.8E-03	7.8E-03	7.7E-03	8.5E-03	8.5E-03
SW	5.9E-03	5.7E-03	4.8E-03	4.8E-03	4.8E-03	5.3E-03	5.3E-03
SSW	9.0E-03	8.6E-03	7.2E-03	7.2E-03	7.2E-03	7.9E-03	7.9E-03
S	7.9E-03	7.5E-03	6.4E-03	6.4E-03	6.3E-03	6.9E-03	7.0E-03
SSE	7.9E-03	7.5E-03	6.3E-03	6.3E-03	6.3E-03	6.9E-03	6.9E-03
SE	5.8E-03	5.6E-03	4.7E-03	4.8E-03	4.7E-03	5.1E-03	5.2E-03
ESE	9.6E-03	9.1E-03	7.7E-03	7.7E-03	7.6E-03	8.4E-03	8.4E-03
E	6.6E-03	6.3E-03	5.3E-03	5.3E-03	5.3E-03	5.8E-03	5.8E-03
ENE	7.7E-03	7.3E-03	6.2E-03	6.2E-03	6.1E-03	6.7E-03	6.8E-03
NE	8.5E-03	8.1E-03	6.8E-03	6.9E-03	6.8E-03	7.5E-03	7.5E-03
NNE	1.4E-02	1.4E-02	1.2E-02	1.2E-02	1.2E-02	1.3E-02	1.3E-02

INDIVIDUAL EFFECTIVE DOSE EQUIVALENT RATE (mrem/y)
(All Radionuclides and Pathways)

	Distance (m)					
Direction	1850	1382	1190	1186	1731	1695
N	3.8E-03	5.9E-03	7.4E-03	7.5E-03	4.2E-03	4.4E-03
NNW	1.7E-03	2.6E-03	3.2E-03	3.2E-03	1.9E-03	1.9E-03
NW	1.4E-03	2.1E-03	2.5E-03	2.5E-03	1.5E-03	1.6E-03
WNW	1.2E-03	1.8E-03	2.2E-03	2.2E-03	1.3E-03	1.4E-03
W	1.6E-03	2.4E-03	2.9E-03	3.0E-03	1.8E-03	1.8E-03
WSW	4.7E-03	7.2E-03	9.0E-03	9.1E-03	5.2E-03	5.3E-03
SW	2.9E-03	4.5E-03	5.6E-03	5.6E-03	3.2E-03	3.3E-03
SSW	4.3E-03	6.7E-03	8.4E-03	8.4E-03	4.7E-03	4.9E-03
S	3.8E-03	5.9E-03	7.4E-03	7.4E-03	4.2E-03	4.3E-03
SSE	3.7E-03	5.8E-03	7.3E-03	7.4E-03	4.1E-03	4.2E-03
SE	3.0E-03	4.4E-03	5.4E-03	5.5E-03	3.2E-03	3.3E-03
ESE	4.6E-03	7.1E-03	8.9E-03	9.0E-03	5.1E-03	5.2E-03
E	3.2E-03	4.9E-03	6.2E-03	6.2E-03	3.5E-03	3.6E-03
ENE	3.7E-03	5.7E-03	7.1E-03	7.2E-03	4.1E-03	4.2E-03
NE	4.1E-03	6.3E-03	7.9E-03	8.0E-03	4.5E-03	4.6E-03
NNE	7.1E-03	1.1E-02	1.4E-02	1.4E-02	7.8E-03	8.0E-03

INDIVIDUAL LIFETIME RISK (deaths)
(All Radionuclides and Pathways)

Direction	Distance (m) 1252	1207	1926	1561	1265	969	1070
N	8.9E-08	9.4E-08	4.6E-08	6.3E-08	8.8E-08	1.3E-07	1.1E-07
NNW	3.7E-08	4.0E-08	2.0E-08	2.7E-08	3.7E-08	5.4E-08	4.7E-08
NW	3.0E-08	3.1E-08	1.6E-08	2.2E-08	2.9E-08	4.3E-08	3.7E-08
WNW	2.6E-08	2.7E-08	1.4E-08	1.9E-08	2.6E-08	3.8E-08	3.3E-08
W	3.5E-08	3.6E-08	1.9E-08	2.5E-08	3.4E-08	5.0E-08	4.3E-08
WSW	1.1E-07	1.1E-07	5.6E-08	7.7E-08	1.1E-07	1.6E-07	1.4E-07
SW	6.6E-08	7.0E-08	3.5E-08	4.8E-08	6.5E-08	9.7E-08	8.4E-08
SSW	1.0E-07	1.1E-07	5.1E-08	7.1E-08	9.8E-08	1.5E-07	1.3E-07
S	8.8E-08	9.3E-08	4.5E-08	6.3E-08	8.6E-08	1.3E-07	1.1E-07
SSE	8.7E-08	9.2E-08	4.4E-08	6.1E-08	8.6E-08	1.3E-07	1.1E-07
SE	6.5E-08	6.8E-08	3.5E-08	4.7E-08	6.4E-08	9.4E-08	8.1E-08
ESE	1.1E-07	1.1E-07	5.5E-08	7.6E-08	1.0E-07	1.6E-07	1.4E-07
E	7.3E-08	7.8E-08	3.8E-08	5.2E-08	7.2E-08	1.1E-07	9.4E-08
ENE	8.5E-08	9.0E-08	4.4E-08	6.1E-08	8.4E-08	1.3E-07	1.1E-07
NE	9.5E-08	1.0E-07	4.9E-08	6.7E-08	9.3E-08	1.4E-07	1.2E-07
NNE	1.6E-07	1.7E-07	8.6E-08	1.2E-07	1.6E-07	2.4E-07	2.1E-07

Direction	Distance (m) 1137	1171	1312	1308	1318	1238	1236
N	1.0E-07	9.9E-08	8.3E-08	8.3E-08	8.2E-08	9.0E-08	9.1E-08
NNW	4.3E-08	4.1E-08	3.5E-08	3.5E-08	3.5E-08	3.8E-08	3.8E-08
NW	3.4E-08	3.3E-08	2.8E-08	2.8E-08	2.8E-08	3.0E-08	3.0E-08
WNW	3.0E-08	2.9E-08	2.4E-08	2.5E-08	2.4E-08	2.7E-08	2.7E-08
W	4.0E-08	3.8E-08	3.2E-08	3.2E-08	3.2E-08	3.5E-08	3.5E-08
WSW	1.3E-07	1.2E-07	1.0E-07	1.0E-07	1.0E-07	1.1E-07	1.1E-07
SW	7.7E-08	7.3E-08	6.2E-08	6.2E-08	6.1E-08	6.7E-08	6.8E-08
SSW	1.2E-07	1.1E-07	9.3E-08	9.3E-08	9.2E-08	1.0E-07	1.0E-07
S	1.0E-07	9.7E-08	8.2E-08	8.2E-08	8.1E-08	8.9E-08	9.0E-08
SSE	1.0E-07	9.7E-08	8.1E-08	8.1E-08	8.0E-08	8.9E-08	8.9E-08
SE	7.5E-08	7.2E-08	6.1E-08	6.1E-08	6.0E-08	6.6E-08	6.6E-08
ESE	1.2E-07	1.2E-07	9.9E-08	1.0E-07	9.8E-08	1.1E-07	1.1E-07
E	8.5E-08	8.1E-08	6.8E-08	6.9E-08	6.8E-08	7.5E-08	7.5E-08
ENE	9.9E-08	9.4E-08	7.9E-08	8.0E-08	7.9E-08	8.7E-08	8.7E-08
NE	1.1E-07	1.0E-07	8.8E-08	8.8E-08	8.7E-08	9.6E-08	9.6E-08
NNE	1.9E-07	1.8E-07	1.5E-07	1.5E-07	1.5E-07	1.7E-07	1.7E-07

INDIVIDUAL LIFETIME RISK (deaths)
(All Radionuclides and Pathways)

	Distance (m)					
Direction	1850	1382	1190	1186	1731	1695
N	4.9E-08	7.6E-08	9.6E-08	9.7E-08	5.4E-08	5.6E-08
NNW	2.1E-08	3.2E-08	4.0E-08	4.1E-08	2.3E-08	2.4E-08
NW	1.7E-08	2.6E-08	3.2E-08	3.2E-08	1.9E-08	1.9E-08
WNW	1.5E-08	2.3E-08	2.8E-08	2.8E-08	1.6E-08	1.7E-08
W	2.0E-08	3.0E-08	3.7E-08	3.7E-08	2.2E-08	2.2E-08
WSW	6.0E-08	9.3E-08	1.2E-07	1.2E-07	6.6E-08	6.8E-08
SW	3.7E-08	5.7E-08	7.1E-08	7.2E-08	4.1E-08	4.2E-08
SSW	5.4E-08	8.6E-08	1.1E-07	1.1E-07	6.0E-08	6.2E-08
S	4.8E-08	7.6E-08	9.5E-08	9.5E-08	5.3E-08	5.5E-08
SSE	4.7E-08	7.5E-08	9.4E-08	9.5E-08	5.2E-08	5.4E-08
SE	3.7E-08	5.6E-08	7.0E-08	7.0E-08	4.1E-08	4.2E-08
ESE	5.8E-08	9.2E-08	1.2E-07	1.2E-07	6.5E-08	6.7E-08
E	4.0E-08	6.3E-08	7.9E-08	8.0E-08	4.5E-08	4.6E-08
ENE	4.7E-08	7.3E-08	9.2E-08	9.3E-08	5.2E-08	5.4E-08
NE	5.2E-08	8.1E-08	1.0E-07	1.0E-07	5.7E-08	5.9E-08
NNE	9.1E-08	1.4E-07	1.8E-07	1.8E-07	1.0E-07	1.0E-07

C A P 8 8 - P C

Version 1.00

Clean Air Act Assessment Package - 1988

S Y N O P S I S R E P O R T

Non-Radon Individual Assessment
Aug 22, 1995 8:26 am

Facility: FERNALD ENVIRONMENTAL MANAGEMENT PROJECT
Address: P.O. BOX 538704
7400 WILLEY ROAD
City: CINCINNATI
State: OH Zip: 45253-8704

Effective Dose Equivalent
(mrem/year)

1.23E-02

At This Location: 1265 Meters North Northeast

Source Category: REMEDIATION SITE
Source Type: Stack
Emission Year: 1994

Comments: Plant 8 East Oliver Vacuum pump exhaust
Monitor assessment

Dataset Name: P239-G2
Dataset Date: Aug 22, 1995 8:23 am
Wind File: WNDFILES\FEMPSTD.WND

MAXIMALLY EXPOSED INDIVIDUAL

Location Of The Individual: 1265 Meters North Northeast
Lifetime Fatal Cancer Risk: 1.60E-07

ORGAN DOSE EQUIVALENT SUMMARY

Organ	Dose Equivalent (mrem/y)
GONADS	4.06E-05
BREAST	4.64E-05
R MAR	9.89E-04
LUNGS	9.52E-02
THYROID	3.95E-05
ENDOST	1.37E-02
RMNDR	1.09E-03
EFFEC	1.23E-02

RADIONUCLIDE EMISSIONS DURING THE YEAR 1994

Nuclide	Class	Size	Source #1 Ci/y	TOTAL Ci/y
RA-226	W	1.00	2.6E-07	2.6E-07
RA-228	W	1.00	1.0E-06	1.0E-06
TH-228	Y	1.00	1.1E-05	1.1E-05
TH-230	Y	1.00	7.7E-07	7.7E-07
TH-232	Y	1.00	1.7E-06	1.7E-06
U-234	Y	1.00	2.9E-04	2.9E-04
U-235	Y	1.00	1.5E-05	1.5E-05
U-236	Y	1.00	1.5E-05	1.5E-05
U-238	Y	1.00	3.8E-04	3.8E-04
AC-228	Y	1.00	1.0E-06	1.0E-06
RA-224	W	1.00	1.1E-05	1.1E-05
TH-231	Y	1.00	7.3E-08	7.3E-08
TH-234	Y	1.00	3.8E-04	3.8E-04

SITE INFORMATION

Temperature:	12 degrees C
Precipitation:	98 cm/y
Mixing Height:	950 m

SOURCE INFORMATION

Source Number:	1
Stack Height (m):	13.72
Diameter (m):	0.25
Plume Rise Momentum (m/s): (Exit Velocity)	1.12E+01

AGRICULTURAL DATA

	Vegetable	Milk	Meat
Fraction Home Produced:	0.700	0.399	0.442
Fraction From Assessment Area:	0.300	0.601	0.558
Fraction Imported:	0.000	0.000	0.000

Food Arrays were not generated for this run.
Default Values used.

DISTANCES USED FOR MAXIMUM INDIVIDUAL ASSESSMENT

1265	1537	2001	1897	2573	2273	2298	1631	1468	2305
2372	1699	2333	1596	1913	2005	1958	1839	1870	1809

C A P 8 8 - P C

Version 1.00

Clean Air Act Assessment Package - 1988

D O S E A N D R I S K E Q U I V A L E N T S U M M A R I E S

Non-Radon Individual Assessment
Aug 22, 1995 8:26 am

Facility: FERNALD ENVIRONMENTAL MANAGEMENT PROJECT
Address: P.O. BOX 538704
7400 WILLEY ROAD
City: CINCINNATI
State: OH Zip: 45253-8704

Source Category: REMEDIATION SITE
Source Type: Stack
Emission Year: 1994

Comments: Plant 8 East Oliver Vacuum pump exhaust

Dataset Name: P239-G2
Dataset Date: Aug 22, 1995 8:23 am
Wind File: WNDFILES\FEMPSTD.WND

ORGAN DOSE EQUIVALENT SUMMARY

Organ	Selected Individual (mrem/y)
GONADS	4.06E-05
BREAST	4.64E-05
R MAR	9.89E-04
LUNGS	9.52E-02
THYROID	3.95E-05
ENDOST	1.37E-02
RMNDR	1.09E-03
EFFEC	1.23E-02

PATHWAY EFFECTIVE DOSE EQUIVALENT SUMMARY

Pathway	Selected Individual (mrem/y)
INGESTION	7.86E-04
INHALATION	1.15E-02
AIR IMMERSION	5.05E-10
GROUND SURFACE	8.01E-06
INTERNAL	1.23E-02
EXTERNAL	8.01E-06
TOTAL	1.23E-02

NUCLIDE EFFECTIVE DOSE EQUIVALENT SUMMARY

Nuclide	Selected Individual (mrem/y)
RA-226	6.62E-07
RA-228	1.08E-06
TH-228	3.57E-04
TH-230	2.50E-05
TH-232	8.02E-05
U-234	5.19E-03
U-235	2.65E-04
U-236	2.57E-04
U-238	6.11E-03
AC-228	1.15E-08
RA-224	5.02E-06
TH-231	9.55E-12
TH-234	4.25E-06
TOTAL	1.23E-02

CANCER RISK SUMMARY

Cancer	Selected Individual Total Lifetime Fatal Cancer Risk
LEUKEMIA	1.11E-09
BONE	7.30E-10
THYROID	9.11E-12
BREAST	1.04E-10
LUNG	1.55E-07
STOMACH	6.31E-11
BOWEL	1.13E-10
LIVER	6.48E-11
PANCREAS	4.01E-11
URINARY	2.33E-09
OTHER	4.91E-11
TOTAL	1.60E-07

PATHWAY RISK SUMMARY

Pathway	Selected Individual Total Lifetime Fatal Cancer Risk
INGESTION	4.17E-09
INHALATION	1.56E-07
AIR IMMERSION	1.15E-14
GROUND SURFACE	1.84E-10
INTERNAL	1.60E-07
EXTERNAL	1.84E-10
TOTAL	1.60E-07

NUCLIDE RISK SUMMARY

Nuclide	Selected Individual Total Lifetime Fatal Cancer Risk
RA-226	8.48E-12
RA-228	1.08E-11
TH-228	7.14E-09
TH-230	2.05E-10
TH-232	4.51E-10
U-234	6.64E-08
U-235	3.47E-09
U-236	3.28E-09
U-238	7.89E-08
AC-228	2.33E-13
RA-224	1.12E-10
TH-231	2.78E-16
TH-234	1.30E-10
TOTAL	1.60E-07

INDIVIDUAL EFFECTIVE DOSE EQUIVALENT RATE (mrem/y)
(All Radionuclides and Pathways)

Direction	Distance (m) 1265	1537	2001	1897	2573	2273	2298
N	6.7E-03	5.0E-03	3.3E-03	3.6E-03	2.3E-03	2.7E-03	2.7E-03
NNW	2.9E-03	2.2E-03	1.5E-03	1.6E-03	1.0E-03	1.2E-03	1.2E-03
NW	2.3E-03	1.7E-03	1.2E-03	1.3E-03	8.4E-04	9.9E-04	9.8E-04
WNW	2.0E-03	1.5E-03	1.1E-03	1.1E-03	7.5E-04	8.8E-04	8.7E-04
W	2.6E-03	2.0E-03	1.4E-03	1.5E-03	1.0E-03	1.2E-03	1.2E-03
WSW	8.2E-03	6.1E-03	4.1E-03	4.4E-03	2.8E-03	3.4E-03	3.3E-03
SW	5.0E-03	3.8E-03	2.6E-03	2.8E-03	1.8E-03	2.1E-03	2.1E-03
SSW	7.6E-03	5.6E-03	3.7E-03	4.0E-03	2.5E-03	3.0E-03	3.0E-03
S	6.7E-03	5.0E-03	3.3E-03	3.6E-03	2.3E-03	2.7E-03	2.7E-03
SSE	6.6E-03	4.9E-03	3.2E-03	3.5E-03	2.2E-03	2.6E-03	2.6E-03
SE	4.9E-03	3.7E-03	2.6E-03	2.8E-03	1.8E-03	2.2E-03	2.1E-03
ESE	8.1E-03	6.0E-03	4.0E-03	4.4E-03	2.8E-03	3.3E-03	3.3E-03
E	5.6E-03	4.1E-03	2.8E-03	3.0E-03	1.9E-03	2.3E-03	2.3E-03
ENE	6.5E-03	4.8E-03	3.2E-03	3.5E-03	2.2E-03	2.7E-03	2.6E-03
NE	7.2E-03	5.3E-03	3.6E-03	3.9E-03	2.4E-03	2.9E-03	2.9E-03
NNE	1.2E-02	9.2E-03	6.3E-03	6.8E-03	4.3E-03	5.2E-03	5.1E-03

Direction	Distance (m) 1631	1468	2305	2372	1699	2333	1596
N	4.6E-03	5.4E-03	2.7E-03	2.6E-03	4.3E-03	2.6E-03	4.7E-03
NNW	2.0E-03	2.3E-03	1.2E-03	1.2E-03	1.9E-03	1.2E-03	2.0E-03
NW	1.6E-03	1.8E-03	9.8E-04	9.4E-04	1.5E-03	9.6E-04	1.6E-03
WNW	1.4E-03	1.6E-03	8.7E-04	8.3E-04	1.3E-03	8.5E-04	1.4E-03
W	1.9E-03	2.1E-03	1.2E-03	1.1E-03	1.7E-03	1.1E-03	1.9E-03
WSW	5.6E-03	6.5E-03	3.3E-03	3.2E-03	5.2E-03	3.2E-03	5.8E-03
SW	3.5E-03	4.0E-03	2.1E-03	2.0E-03	3.3E-03	2.0E-03	3.6E-03
SSW	5.1E-03	6.0E-03	3.0E-03	2.8E-03	4.8E-03	2.9E-03	5.3E-03
S	4.5E-03	5.3E-03	2.7E-03	2.6E-03	4.3E-03	2.6E-03	4.7E-03
SSE	4.4E-03	5.2E-03	2.6E-03	2.5E-03	4.2E-03	2.5E-03	4.6E-03
SE	3.4E-03	4.0E-03	2.1E-03	2.1E-03	3.3E-03	2.1E-03	3.6E-03
ESE	5.5E-03	6.4E-03	3.2E-03	3.1E-03	5.1E-03	3.2E-03	5.7E-03
E	3.8E-03	4.4E-03	2.3E-03	2.2E-03	3.5E-03	2.2E-03	3.9E-03
ENE	4.4E-03	5.2E-03	2.6E-03	2.5E-03	4.1E-03	2.6E-03	4.5E-03
NE	4.9E-03	5.7E-03	2.9E-03	2.7E-03	4.6E-03	2.8E-03	5.0E-03
NNE	8.5E-03	9.9E-03	5.1E-03	4.9E-03	8.0E-03	5.0E-03	8.7E-03

INDIVIDUAL EFFECTIVE DOSE EQUIVALENT RATE (mrem/y)
(All Radionuclides and Pathways)

	Distance (m)					
Direction	1913	2005	1958	1839	1870	1809
N	3.6E-03	3.3E-03	3.4E-03	3.8E-03	3.7E-03	3.9E-03
NNW	1.6E-03	1.5E-03	1.5E-03	1.7E-03	1.6E-03	1.7E-03
NW	1.3E-03	1.2E-03	1.2E-03	1.3E-03	1.3E-03	1.4E-03
WNW	1.1E-03	1.0E-03	1.1E-03	1.2E-03	1.2E-03	1.2E-03
W	1.5E-03	1.4E-03	1.4E-03	1.6E-03	1.5E-03	1.6E-03
WSW	4.4E-03	4.1E-03	4.2E-03	4.6E-03	4.5E-03	4.8E-03
SW	2.7E-03	2.6E-03	2.6E-03	2.9E-03	2.8E-03	3.0E-03
SSW	4.0E-03	3.7E-03	3.8E-03	4.2E-03	4.1E-03	4.3E-03
S	3.6E-03	3.3E-03	3.4E-03	3.8E-03	3.7E-03	3.9E-03
SSE	3.4E-03	3.2E-03	3.3E-03	3.7E-03	3.6E-03	3.8E-03
SE	2.8E-03	2.6E-03	2.7E-03	2.9E-03	2.9E-03	3.0E-03
ESE	4.3E-03	4.0E-03	4.1E-03	4.6E-03	4.4E-03	4.7E-03
E	3.0E-03	2.8E-03	2.9E-03	3.2E-03	3.1E-03	3.2E-03
ENE	3.4E-03	3.2E-03	3.3E-03	3.7E-03	3.6E-03	3.8E-03
NE	3.8E-03	3.5E-03	3.7E-03	4.0E-03	3.9E-03	4.1E-03
NNE	6.7E-03	6.2E-03	6.5E-03	7.1E-03	6.9E-03	7.3E-03

INDIVIDUAL LIFETIME RISK (deaths)
(All Radionuclides and Pathways)

Direction	Distance (m) 1265	1537	2001	1897	2573	2273	2298
N	8.7E-08	6.4E-08	4.3E-08	4.6E-08	2.9E-08	3.5E-08	3.4E-08
NNW	3.7E-08	2.7E-08	1.8E-08	2.0E-08	1.3E-08	1.5E-08	1.5E-08
NW	2.9E-08	2.2E-08	1.5E-08	1.6E-08	1.0E-08	1.2E-08	1.2E-08
WNW	2.5E-08	1.9E-08	1.3E-08	1.4E-08	9.0E-09	1.1E-08	1.1E-08
W	3.4E-08	2.5E-08	1.7E-08	1.9E-08	1.2E-08	1.5E-08	1.4E-08
WSW	1.1E-07	7.9E-08	5.3E-08	5.7E-08	3.6E-08	4.3E-08	4.2E-08
SW	6.5E-08	4.8E-08	3.3E-08	3.5E-08	2.2E-08	2.7E-08	2.7E-08
SSW	9.8E-08	7.2E-08	4.8E-08	5.2E-08	3.2E-08	3.9E-08	3.8E-08
S	8.6E-08	6.4E-08	4.2E-08	4.6E-08	2.9E-08	3.5E-08	3.4E-08
SSE	8.5E-08	6.3E-08	4.1E-08	4.5E-08	2.7E-08	3.4E-08	3.3E-08
SE	6.4E-08	4.8E-08	3.3E-08	3.6E-08	2.3E-08	2.8E-08	2.7E-08
ESE	1.0E-07	7.7E-08	5.2E-08	5.6E-08	3.5E-08	4.2E-08	4.2E-08
E	7.2E-08	5.3E-08	3.5E-08	3.8E-08	2.4E-08	2.9E-08	2.9E-08
ENE	8.4E-08	6.2E-08	4.1E-08	4.5E-08	2.8E-08	3.4E-08	3.3E-08
NE	9.3E-08	6.9E-08	4.5E-08	4.9E-08	3.1E-08	3.7E-08	3.7E-08
NNE	1.6E-07	1.2E-07	8.1E-08	8.8E-08	5.6E-08	6.7E-08	6.6E-08

Direction	Distance (m) 1631	1468	2305	2372	1699	2333	1596
N	5.9E-08	6.9E-08	3.4E-08	3.3E-08	5.5E-08	3.4E-08	6.1E-08
NNW	2.5E-08	2.9E-08	1.5E-08	1.4E-08	2.4E-08	1.5E-08	2.6E-08
NW	2.0E-08	2.3E-08	1.2E-08	1.2E-08	1.9E-08	1.2E-08	2.1E-08
WNW	1.8E-08	2.0E-08	1.1E-08	1.0E-08	1.7E-08	1.0E-08	1.8E-08
W	2.3E-08	2.7E-08	1.4E-08	1.4E-08	2.2E-08	1.4E-08	2.4E-08
WSW	7.2E-08	8.5E-08	4.2E-08	4.0E-08	6.8E-08	4.2E-08	7.5E-08
SW	4.4E-08	5.2E-08	2.6E-08	2.5E-08	4.2E-08	2.6E-08	4.6E-08
SSW	6.6E-08	7.8E-08	3.8E-08	3.6E-08	6.2E-08	3.7E-08	6.8E-08
S	5.8E-08	6.9E-08	3.4E-08	3.3E-08	5.5E-08	3.4E-08	6.0E-08
SSE	5.7E-08	6.7E-08	3.3E-08	3.1E-08	5.3E-08	3.2E-08	5.9E-08
SE	4.4E-08	5.1E-08	2.7E-08	2.6E-08	4.2E-08	2.7E-08	4.6E-08
ESE	7.1E-08	8.3E-08	4.1E-08	4.0E-08	6.6E-08	4.1E-08	7.3E-08
E	4.8E-08	5.7E-08	2.9E-08	2.7E-08	4.5E-08	2.8E-08	5.0E-08
ENE	5.7E-08	6.7E-08	3.3E-08	3.2E-08	5.3E-08	3.2E-08	5.8E-08
NE	6.3E-08	7.4E-08	3.6E-08	3.5E-08	5.9E-08	3.6E-08	6.5E-08
NNE	1.1E-07	1.3E-07	6.5E-08	6.3E-08	1.0E-07	6.4E-08	1.1E-07

INDIVIDUAL LIFETIME RISK (deaths)
(All Radionuclides and Pathways)

	Distance (m)					
Direction	1913	2005	1958	1839	1870	1809
N	4.6E-08	4.3E-08	4.4E-08	4.9E-08	4.8E-08	5.0E-08
NNW	2.0E-08	1.8E-08	1.9E-08	2.1E-08	2.0E-08	2.2E-08
NW	1.6E-08	1.5E-08	1.5E-08	1.7E-08	1.6E-08	1.7E-08
WNW	1.4E-08	1.3E-08	1.3E-08	1.5E-08	1.4E-08	1.5E-08
W	1.9E-08	1.7E-08	1.8E-08	2.0E-08	1.9E-08	2.0E-08
WSW	5.6E-08	5.2E-08	5.4E-08	6.0E-08	5.8E-08	6.1E-08
SW	3.5E-08	3.3E-08	3.4E-08	3.7E-08	3.6E-08	3.8E-08
SSW	5.1E-08	4.8E-08	4.9E-08	5.4E-08	5.3E-08	5.6E-08
S	4.6E-08	4.2E-08	4.4E-08	4.8E-08	4.7E-08	5.0E-08
SSE	4.4E-08	4.1E-08	4.3E-08	4.7E-08	4.6E-08	4.8E-08
SE	3.5E-08	3.3E-08	3.4E-08	3.7E-08	3.6E-08	3.8E-08
ESE	5.5E-08	5.1E-08	5.3E-08	5.9E-08	5.7E-08	6.0E-08
E	3.8E-08	3.5E-08	3.7E-08	4.0E-08	3.9E-08	4.1E-08
ENE	4.4E-08	4.1E-08	4.3E-08	4.7E-08	4.6E-08	4.8E-08
NE	4.9E-08	4.5E-08	4.7E-08	5.2E-08	5.1E-08	5.3E-08
NNE	8.6E-08	8.1E-08	8.4E-08	9.2E-08	8.9E-08	9.4E-08

7201

OHIO ENVIRONMENTAL PROTECTION AGENCY
APPLICATION FOR A PERMIT TO OPERATE AN AIR CONTAMINANT SOURCE

D.O.E.-Fernald Environmental Management Project
Facility Name

Mr. Stephen M. Beckman
Person to Contact

7400 Willey Road
Facility Address

Post Office Box 538704
Mailing Address

Fernald | Hamilton | 45030
City | County | Zip

Cincinnati | OH | 45253-8704
City | State | Zip

513/ 648-3000
Telephone Area Number

513/ 648-5264
Telephone

#1431110128- P240
(Application no., if this is a renewal application)

4953
Std. Ind. Class. Code

1. Complete and attach any of the following appendices most appropriate to the air contaminant source. In addition, a compliance time schedule form is to be attached when applicable. Check as appropriate the following:

- X Appendix A, Process
- ___ Appendix B, Fuel-Burning Equipment
- ___ Appendix C, Incinerator
- ___ Appendix D, Surface Coating or Printing Operation
- ___ Appendix E, Storage Tank
- ___ Appendix H, Gasoline Dispensing Facility
- ___ Appendix J, Loading Rack at Bulk Gasoline Plant or Terminal
- ___ Appendix K, Surface Coating Line or Printing Line
- ___ Appendix L, Solvent Metal Cleaning
- ___ Appendix M, Fugitive Dust Emission Sources
- ___ Specify Appendix No.
- ___ Appendix N, Rubber Tire Manufacturing
- ___ Appendix O, Dry Cleaning Facility
- ___ Appendix P, Landfills
- ___ Other Appendix ___
- ___ Compliance Time Schedule

2. Description of Source (same as used on appendix): Plant 8 - West Eimco Filter

3. Your identification for Source (same as used on appendix): 8-010

I, being the individual specified in Rule 3745-35-02(B) of the Ohio Administrative Code, hereby apply for a Permit to Operate the air contaminant source(s) described herein. As required, the following additional documents are submitted as part of this application (describe all attachments):

Attachments:
- Appendix A
- Process Flow Diagram
- Emission Calculations
- NESHAP Subpart H Calculations

Authorized Signature*
Terence D. Hagen
Director Environmental Compliance
Title
9/29/95
Date

000034

*Pursuant to OAC Rule 3745-35-02(B) (Permit to Operate).
Operation of an air contaminant source without an effective permit to operate is prohibited to 3704.05 Ohio Revised Code.

For Official Use Only

Premise No. / / /
Source No. /
Application No. /

OEPA NO. 1431110128 P240
A-1
FEMP ID NO. 8-010

APPENDIX A, PROCESS

PROCESS DATA

1. Name of process Plant 8 - West Eimco Filter and
2. End product of this process Slag Leach Filter Cake, Neutralized Sump Cake and Filtrate
3. Primary process equipment West Eimco Vacuum Filter

   Your identification 8-010 Year Installed 1955

4. Manufacturer Eimco Make or Model Unknown
5. Capacity of equipment (lbs./hr): Rated 9174 lb/hr Max. 10829 lb/hr
6. Method of exhaust ventilation: [X] Stack [ ] Window fan [ ] Roof vent
   [X] Other, describe Quickdraft fan

   Are there multiple exhausts? [X] Yes [X] No

OPERATING DATA

7. Normal operating schedule: 24 hrs./day, 5 days/wk., 50 wks./year.
8. Percent annual production (finished units) by season:
   Winter 25 Spring 25 Summer 25 Fall 25
9. Hourly production rates (lbs.): Average 9174 lb/hr Maximum 10829 lb/hr
10. Annual production (indicate units) 6,600,000 gallons (filtered)
    projected percent annual increase in production -0-
11. Type of operation: [X] Continuous [ ] Batch
12. If batch, indicate Minutes per cycle _____ Minutes between cycles _____
13. Materials used in process:

List of Raw Materials	Principal Use	Amount (lbs./hr.)
Slag Leach Slurry and	To be filtered	9174 lb/hr
Neutralized Sump Liquor		
Dicalite & Water slurry	Filter Precoat	1200 gal/day

14. A PROCESS FLOW DIAGRAM MUST BE INCLUDED WITH THIS APPENDIX. Show entry and exit points of all raw materials, intermediate products, by products and finished products. Label all materials including airborne contaminants and other waste materials. Label the process equipment.

000035

See attached Process Flow Diagram

OEPA NO. 1431110128 P240
FEMP ID NO. 8-010

CONTROL EQUIPMENT

Control Equipment Code:

(A) Settling Chamber
(B) Cyclone
(C) Multiple Cyclone
(D) Electrostatic Precipitator
(E) Fabric Filter
(F) Spray Chamber
(G) Cyclonic Scrubber
(H) Impingement Scrubber
(I) Orifice Scrubber
(J) Venturi Scrubber
(K) Plate or Tray Tower
(L) Packing Tower
(M) Adsorber
(N) Condenser
(O) Afterburner - Catalytic
(P) Afterburner - Thermal
(Q) Other, Describe_____

15. Control Equipment Data: N/A

Item	Primary Collector	Secondary Collector
(a) Type (See above Code)		
(b) Manufacturer		
(c) Model No.		
(d) Year Installed		
(e) Your Identification		
(f) Pollutant Controlled		
(g) Controlled pollutant emission rate (if known)		
(h) Pressure Drop		
(i) Design efficiency		
(j) Operating efficiency		

STACK DATA

16. Your Stack Identification West Eimco Nash Vacuum Pump Exhaust (EP8-015)

17. Are other sources vented to this stack? [X] Yes [ ] No
If yes, identify sources East Eimco Nash Vacuum Pump (8-011)

18. Type: [X] Round, top inside diameter dimension 8 inches
[ ] Rectangular, top inside dimensions (L)_____ X (W)_____

19. Height: Above roof 3 ft., above ground 45 ft.

20. Exit gas: Temp. Amb. °F, Volume 900 ACFM, Velocity 2600 ft./min.

21. Continuous monitoring equipment: [ ] Yes [X] No
If yes, indicate : Type _____, Manufacturer _____

Make or Model _____, Pollutant(s) monitored _____

22. Emission data: Emissions from this source have been determined and such data is included with this appendix: [X] Yes [ ] No
If yes, check method: [ ] Stack Test [X] Emission Factor [ ] Material Balance

Completed by Kip Klee, Date 08/17/95

OEPA NO. 1431110128 P240
FEMP ID NO. 8-010

CONTROL EQUIPMENT

Control Equipment Code:

(A) Settling Chamber
(B) Cyclone
(C) Multiple Cyclone
(D) Electrostatic Precipitator
(E) Fabric Filter
(F) Spray Chamber
(G) Cyclonic Scrubber
(H) Impingement Scrubber
(I) Orifice Scrubber
(J) Venturi Scrubber
(K) Plate or Tray Tower
(L) Packing Tower
(M) Adsorber
(N) Condenser
(O) Afterburner - Catalytic
(P) Afterburner - Thermal
(Q) Other, Describe_____

15. Control Equipment Data: N/A

Item	Primary Collector	Secondary Collector
(a) Type (See above Code)		
(b) Manufacturer		
(c) Model No.		
(d) Year Installed		
(e) Your Identification		
(f) Pollutant Controlled		
(g) Controlled pollutant emission rate (if known)		
(h) Pressure Drop		
(i) Design efficiency		
(j) Operating efficiency		

STACK DATA

16. Your Stack Identification West Eimco Hood Exhaust (EP8-014A)

17. Are other sources vented to this stack? [ ] Yes [X] No
If yes, identify sources_____

18. Type: [X] Round, top inside diameter dimension 16 inches
[ ] Rectangular, top inside dimensions (L)_____ X (W)_____

19. Height: Above roof 3 ft., above ground 45 ft.

20. Exit gas: Temp. Amb. °F, Volume 1500 ACFM, Velocity 1074 ft./min.

21. Continuous monitoring equipment: [ ] Yes [X] No
If yes, indicate : Type _____, Manufacturer _____

Make or Model _____, Pollutant(s) monitored _____

22. Emission data: Emissions from this source have been determined and such data is included with this appendix: [X] Yes [ ] No
If yes, check method: [ ] Stack Test [X] Emission Factor [ ] Material Balance

Completed by Kip Klee, Date 08/17/95

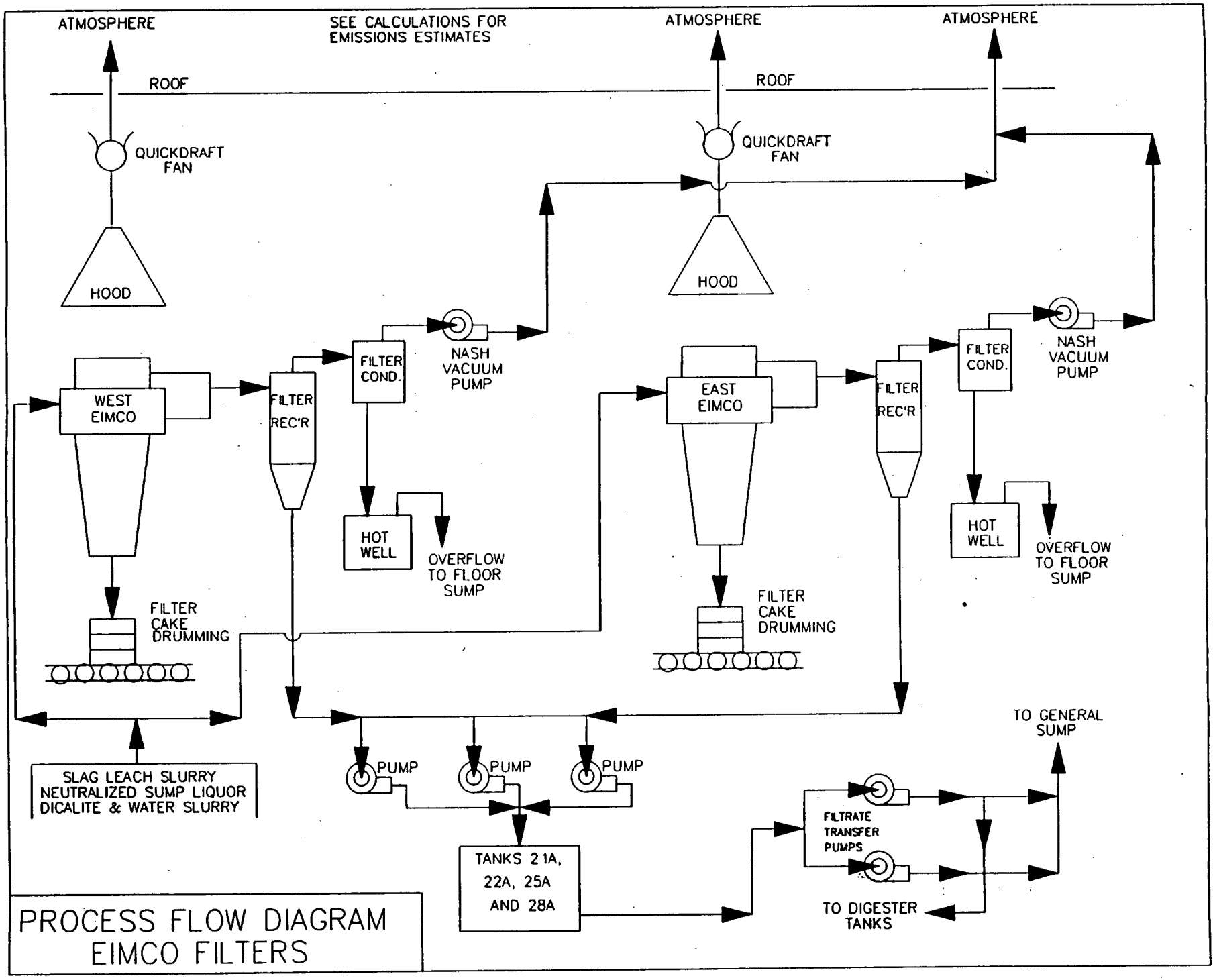

PROCESS FLOW DIAGRAM
EIMCO FILTERS

000038

7201

URANIUM AND PARTICULATE EMISSIONS FROM THE
PLANT 8 WEST EIMCO VACUUM FILTER VACUUM PUMP

1. VACUUM PUMP EMISSION SUMMARY

EMISSIONS	PARTICULATE		URANIUM	
	Lbs/hr	Tons/yr	Lbs/hr	Tons/yr
ACTUAL	5.00E-03	1.50E-02	4.48E-04	1.34E-03
POTENTIAL	7.50E-03	3.29E-02	6.72E-04	2.94E-03
UNCONTROLLED POTENTIAL	7.50E-03	3.29E-02	6.72E-04	2.94E-03
ALLOWABLE	12.7	55.6	6.72E-04	2.94E-03

2. ASSUMPTIONS and TEST DATA

A. Assume vacuum pump emissions are similar to those of the East Oliver filter and that emissions from the vacuum pump may be based on the results of the stack test performed on May 10, 1995 by the Hayden Environmental Group, Inc. on the East Oliver filter. Results of the stack test indicate uranium emissions of 4.48E-04 lb/hr and a total particulate release rate of 5.00E-03 lb/hr.

B. Normal operating hours are 6000 hours per year; Potential operating hours are 8760 hours per year.

C. Potential emissions are assumed to be 1.5 times normal emissions.

3. URANIUM EMISSIONS

A. Actual uranium emissions:

U = 4.48E-04 lb/hr (from stack test)

$$\frac{4.48E\text{-}04\ \text{lb U}}{\text{hour}} \left| \frac{6000\ \text{hrs}}{\text{year}} \right| \frac{1\ \text{ton}}{2000\ \text{lbs}} = 1.34E\text{-}04\ \frac{\text{tons U}}{\text{year}}$$

B. Potential uranium emissions:

$$\frac{4.48E\text{-}04\ \text{lb U}}{\text{hr}} \left| 1.5 \right| = 6.72E\text{-}04\ \frac{\text{lb U}}{\text{hr}}$$

$$\frac{6.72E\text{-}04\ \text{lb U}}{\text{hour}} \left| \frac{8760\ \text{hrs}}{\text{year}} \right| \frac{1\ \text{ton}}{2000\ \text{lbs}} = 2.94E\text{-}03\ \frac{\text{tons U}}{\text{year}}$$

C. Uncontrolled potential uranium emissions:

Since there is no control equipment on this stack, the uncontrolled potential emissions will equal the potential emissions.

D. Allowable uranium emissions:

The allowable uranium emissions are equal to the potential uranium emissions.

---

4. PARTICULATE (PM) EMISSIONS

A. Actual particulate (PM) emissions:

PM = 5.00E-03 lb/hr (from stack test)

$$\frac{5.00E\text{-}03 \text{ lb PM}}{\text{hr}} \left| \frac{6000 \text{ hrs}}{\text{year}} \right| \frac{1 \text{ ton}}{2000 \text{ lbs}} = 1.50E\text{-}02 \ \frac{\text{tons PM}}{\text{year}}$$

B. Potential particulate emissions:

$$\frac{5.00\text{-}03 \text{ lb U}}{\text{hour}} \left| \frac{1.5}{} \right| = 7.50E\text{-}03 \ \frac{\text{lb PM}}{\text{hr}}$$

$$\frac{7.50E\text{-}03 \text{ lb PM}}{\text{hour}} \left| \frac{8760 \text{ hrs}}{\text{year}} \right| \frac{1 \text{ ton}}{2000 \text{ lbs}} = 3.29E\text{-}02 \ \frac{\text{tons PM}}{\text{year}}$$

C. Uncontrolled potential particulate emissions:

Since there is no control equipment on this stack, the uncontrolled potential emissions will equal the potential emissions.

D. Allowable particulate emissions:

Process weight rate (P) in tons/hr:

$$\frac{10829 \text{ lb}}{\text{hour}} \left| \frac{1 \text{ ton}}{2000 \text{ lbs}} \right| = 5.4145 \ \frac{\text{tons}}{\text{hour}}$$

From Table I of the Ohio Administrative Code 3745-17-11:

Allowable emissions (E) in lbs/hr:

$$E = 4.10(P)^{0.67}$$
$$E = 4.10(5.4145)^{0.67}$$

$$E = 12.7 \text{ lbs PM/hour}$$

$$\frac{12.7 \text{ lb}}{\text{hour}} \left| \frac{8760 \text{ hrs}}{\text{year}} \right| \frac{1 \text{ ton}}{2000 \text{ lbs}} = 55.6 \ \frac{\text{tons PM}}{\text{year}}$$

URANIUM AND PARTICULATE EMISSIONS FROM THE
PLANT 8 WEST EIMCO FILTER HOOD EXHAUST

---

1. FILTER HOOD EMISSION SUMMARY

EMISSIONS	PARTICULATE		URANIUM	
	Lbs/hr	Tons/yr	Lbs/hr	Tons/yr
ACTUAL	4.16E-03	1.25E-03	8.32E-05	2.49E-04
POTENTIAL	4.16E-05	1.82E-02	8.32E-05	3.64E-04
UNCONTROLLED POTENTIAL	4.16E-05	1.82E-02	8.32E-05	3.64E-04
ALLOWABLE	12.7	55.6	8.32E-05	3.64E-04

2. ASSUMPTIONS and TEST DATA

A. The air in the vicinity of the filters is assumed to have a maximum alpha activity of $1.0E^{-11}$ microcuries/cm^3 and is indicative of the air being exhausted through the filter hood. This activity is based on air sample results obtained in the area of vacuum filter operations of a similar nature. This activity is considered to be representative of the emissions that would occur at both average and maximum process feed rates.

B. All of the alpha activity is attributed to natural uranium with a specific activity coefficient of 0.676 microcuries/gram.

C. Particulate emissions (resulting from entrainment in water droplets) are back-calculated from uranium emissions data assuming the percentage of uranium in a particulate form is 2%. This assumption is based on upon Plant 8 Rotary Kiln and Primary Calciner observations and the uranium content of the feed material.

D. Flow through the hood is 1500 ACFM; Diameter is 16 inches.

3. URANIUM CONCENTRATION IN VENT EXHAUST:

$$\frac{1.0E\text{-}11 \text{ microcuries}}{cm^3} \left| \frac{\text{gram}}{0.676 \text{ microcuries}} \right| = 1.48E\text{-}11 \frac{\text{grams}}{cm^3}$$

$$\frac{1.48E\text{-}11 \text{ g}}{cm^3} \left| \frac{10^6 \ cm^3}{m^3} \right| \frac{m^3}{35.314 \ ft^3} \left| \frac{Kg}{1000 \text{ g}} \right| \frac{2.205 \text{ lb}}{Kg} \Big| = 9.24E\text{-}10 \frac{\text{lbs U}}{ft^3}$$

4. URANIUM EMISSIONS

A. Actual uranium emissions:

$$\frac{1500 \ ft^3}{min} \left| \frac{60 \text{ min}}{\text{hour}} \right| \frac{9.24E\text{-}10 \text{ lbs U}}{ft^3} \Big| = 8.32E\text{-}05 \frac{\text{lbs U}}{\text{hour}}$$

$$\frac{8.32E\text{-}05 \text{ lbs U}}{\text{hour}} \left| \frac{6000 \text{ hours}}{\text{year}} \right| \frac{\text{ton}}{2000 \text{ lb}} \Big| = 2.49E\text{-}04 \frac{\text{tons U}}{\text{year}}$$

B. Potential uranium emissions:

$$\frac{8.32E\text{-}05 \text{ lbs U}}{\text{hour}} \left| \frac{8760 \text{ hours}}{\text{year}} \right| \frac{\text{ton}}{2000 \text{ lb}} \Bigg| = 3.64E\text{-}04 \frac{\text{tons U}}{\text{year}}$$

C. Uncontrolled potential emissions:

Since no control equipment is used on the the vacuum pumps or filter hood exhausts, the uncontrolled potential emissions will equal the potential emissions.

D. Allowable emissions:

The allowable uranium emissions are equal to the potential uranium emissions.

5. PARTICULATE (PM) EMISSIONS

A. Actual particulate emissions:

$$\frac{8.32E\text{-}05 \text{ lbs U}}{\text{hour}} \left| \frac{100}{2} \right| = 4.16E\text{-}03 \frac{\text{lbs PM}}{\text{hour}}$$

$$\frac{4.16E\text{-}03 \text{ lbs PM}}{\text{hour}} \left| \frac{6000 \text{ hours}}{\text{year}} \right| \frac{\text{ton}}{2000 \text{ lb}} \Bigg| = 1.25E\text{-}03 \frac{\text{tons PM}}{\text{year}}$$

B. Potential particulate emissions:

$$\frac{4.16E\text{-}05 \text{ lbs PM}}{\text{hour}} \left| \frac{8760 \text{ hrs}}{\text{year}} \right| \frac{\text{ton}}{2000 \text{ lb}} \Bigg| = 1.82E\text{-}02 \frac{\text{tons PM}}{\text{year}}$$

C. Uncontrolled potential emissions:

Since no control equipment is used on the the vacuum pumps or filter hood exhausts, the uncontrolled potential emissions will equal the potential emissions.

D. Allowable emissions:

Process weight rate (P) in tons/hr:

$$\frac{10829 \text{ lbs}}{\text{hour}} \left| \frac{\text{ton}}{2000 \text{ lbs}} \right| = 5.4145 \frac{\text{tons}}{\text{hour}}$$

From Table I of the Ohio Administrative Code 3745-17-11:

Allowable emissions (E) in lbs/hr:

$$E = 4.10(P)^{0.67}$$
$$E = 4.10(5.4145)^{0.67}$$

$$E = 12.7 \text{ lbs/hour}$$

$$\frac{12.7 \text{ lb}}{\text{Hr}} \left| \frac{8760 \text{ hr}}{\text{yr}} \right| \frac{\text{tons}}{2000 \text{ lb}} \Bigg| = 55.6 \frac{\text{tons PM}}{\text{year}}$$

C A P 8 8 - P C

Version 1.00

Clean Air Act Assessment Package - 1988

S Y N O P S I S R E P O R T

Non-Radon Individual Assessment
Aug 23, 1995 8:10 am

Facility: FERNALD ENVIRONMENTAL MANAGEMENT PROJECT
Address: P.O. BOX 538704
7400 WILLEY ROAD
City: CINCINNATI
State: OH Zip: 45253-8704

Effective Dose Equivalent
(mrem/year)

2.17E-02

At This Location: 969 Meters North Northeast

Source Category: REMEDIATION SITE
Source Type: Stack
Emission Year: 1994

Comments: Plant 8 West Eimco Hood & vacuum pump exhaust
1 = Vacuum Pump vent, 2 = Hood exhaust
Monitor assessment

Dataset Name: P240-G1
Dataset Date: Aug 23, 1995 8:09 am
Wind File: WNDFILES\FEMPSTD.WND

MAXIMALLY EXPOSED INDIVIDUAL

Location Of The Individual: 969 Meters North Northeast
Lifetime Fatal Cancer Risk: 2.82E-07

ORGAN DOSE EQUIVALENT SUMMARY

Organ	Dose Equivalent (mrem/y)
GONADS	7.04E-05
BREAST	8.03E-05
R MAR	1.72E-03
LUNGS	1.68E-01
THYROID	6.86E-05
ENDOST	2.39E-02
RMNDR	1.89E-03
EFFEC	2.17E-02

RADIONUCLIDE EMISSIONS DURING THE YEAR 1994

Nuclide	Class	Size	Source #1 Ci/y	Source #2 Ci/y	TOTAL Ci/y
RA-226	W	1.00	2.6E-07	4.8E-08	3.1E-07
RA-228	W	1.00	1.0E-06	1.9E-07	1.2E-06
TH-228	Y	1.00	1.1E-05	2.0E-06	1.3E-05
TH-230	Y	1.00	7.7E-07	1.4E-07	9.1E-07
TH-232	Y	1.00	1.7E-06	3.2E-07	2.0E-06
U-234	Y	1.00	2.9E-04	5.4E-05	3.4E-04
U-235	Y	1.00	1.5E-05	2.9E-06	1.8E-05
U-236	Y	1.00	1.5E-05	2.0E-06	1.7E-05
U-238	Y	1.00	3.8E-04	7.1E-05	4.5E-04
AC-228	Y	1.00	1.0E-06	1.9E-07	1.2E-06
RA-224	W	1.00	1.1E-05	2.0E-06	1.3E-05
TH-231	Y	1.00	7.3E-08	1.4E-08	8.7E-08
TH-234	Y	1.00	3.8E-04	7.1E-05	4.5E-04

SITE INFORMATION

Temperature:	12 degrees C
Precipitation:	98 cm/y
Mixing Height:	950 m

SOURCE INFORMATION

Source Number:	1	2
Stack Height (m):	13.72	13.72
Diameter (m):	0.20	0.41
Plume Rise Momentum (m/s): (Exit Velocity)	1.31E+01	5.46E+00

AGRICULTURAL DATA

	Vegetable	Milk	Meat
Fraction Home Produced:	0.700	0.399	0.442
Fraction From Assessment Area:	0.300	0.601	0.558
Fraction Imported:	0.000	0.000	0.000

Food Arrays were not generated for this run.
Default Values used.

DISTANCES USED FOR MAXIMUM INDIVIDUAL ASSESSMENT

1252	1207	1926	1561	1265	969	1070	1137	1171	1312
1308	1318	1238	1236	1850	1382	1190	1186	1731	1695

C A P 8 8 - P C

Version 1.00

Clean Air Act Assessment Package - 1988

D O S E A N D R I S K E Q U I V A L E N T S U M M A R I E S

Non-Radon Individual Assessment
Aug 23, 1995 8:10 am

Facility: FERNALD ENVIRONMENTAL MANAGEMENT PROJECT
Address: P.O. BOX 538704
7400 WILLEY ROAD
City: CINCINNATI
State: OH Zip: 45253-8704

Source Category: REMEDIATION SITE
Source Type: Stack
Emission Year: 1994

Comments: Plant 8 West Eimco Hood & vacuum pump exhaust
1 = Vacuum Pump vent, 2 = Hood exhaust

Dataset Name: P240-G1
Dataset Date: Aug 23, 1995 8:09 am
Wind File: WNDFILES\FEMPSTD.WND

ORGAN DOSE EQUIVALENT SUMMARY

Organ	Selected Individual (mrem/y)
GONADS	7.04E-05
BREAST	8.03E-05
R MAR	1.72E-03
LUNGS	1.68E-01
THYROID	6.86E-05
ENDOST	2.39E-02
RMNDR	1.89E-03
EFFEC	2.17E-02

PATHWAY EFFECTIVE DOSE EQUIVALENT SUMMARY

Pathway	Selected Individual (mrem/y)
INGESTION	1.37E-03
INHALATION	2.03E-02
AIR IMMERSION	8.91E-10
GROUND SURFACE	1.37E-05
INTERNAL	2.17E-02
EXTERNAL	1.37E-05
TOTAL	2.17E-02

NUCLIDE EFFECTIVE DOSE EQUIVALENT SUMMARY

Nuclide	Selected Individual (mrem/y)
RA-226	1.16E-06
RA-228	1.88E-06
TH-228	6.30E-04
TH-230	4.41E-05
TH-232	1.42E-04
U-234	9.16E-03
U-235	4.67E-04
U-236	4.31E-04
U-238	1.08E-02
AC-228	2.04E-08
RA-224	8.86E-06
TH-231	1.68E-11
TH-234	7.43E-06
TOTAL	2.17E-02

CANCER RISK SUMMARY

Cancer	Selected Individual Total Lifetime Fatal Cancer Risk
LEUKEMIA	1.93E-09
BONE	1.27E-09
THYROID	1.58E-11
BREAST	1.79E-10
LUNG	2.74E-07
STOMACH	1.09E-10
BOWEL	1.97E-10
LIVER	1.12E-10
PANCREAS	6.95E-11
URINARY	4.05E-09
OTHER	8.50E-11
TOTAL	2.82E-07

PATHWAY RISK SUMMARY

Pathway	Selected Individual Total Lifetime Fatal Cancer Risk
INGESTION	7.26E-09
INHALATION	2.75E-07
AIR IMMERSION	2.04E-14
GROUND SURFACE	3.15E-10
INTERNAL	2.82E-07
EXTERNAL	3.15E-10
TOTAL	2.82E-07

NUCLIDE RISK SUMMARY

Nuclide	Selected Individual Total Lifetime Fatal Cancer Risk
RA-226	1.49E-11
RA-228	1.89E-11
TH-228	1.26E-08
TH-230	3.61E-10
TH-232	7.97E-10
U-234	1.17E-07
U-235	6.11E-09
U-236	5.52E-09
U-238	1.39E-07
AC-228	4.11E-13
RA-224	1.99E-10
TH-231	4.91E-16
TH-234	2.28E-10
TOTAL	2.82E-07

INDIVIDUAL EFFECTIVE DOSE EQUIVALENT RATE (mrem/y)
(All Radionuclides and Pathways)

	Distance (m)						
Direction	1252	1207	1926	1561	1265	969	1070
N	8.2E-03	8.6E-03	4.3E-03	5.9E-03	8.0E-03	1.2E-02	1.0E-02
NNW	3.5E-03	3.7E-03	1.9E-03	2.6E-03	3.5E-03	5.0E-03	4.4E-03
NW	2.8E-03	2.9E-03	1.6E-03	2.1E-03	2.8E-03	4.0E-03	3.5E-03
WNW	2.5E-03	2.6E-03	1.4E-03	1.8E-03	2.4E-03	3.5E-03	3.1E-03
W	3.3E-03	3.4E-03	1.8E-03	2.4E-03	3.2E-03	4.6E-03	4.0E-03
WSW	9.9E-03	1.0E-02	5.2E-03	7.1E-03	9.8E-03	1.4E-02	1.3E-02
SW	6.1E-03	6.5E-03	3.3E-03	4.4E-03	6.0E-03	8.9E-03	7.7E-03
SSW	9.2E-03	9.7E-03	4.7E-03	6.5E-03	9.0E-03	1.4E-02	1.2E-02
S	8.1E-03	8.5E-03	4.2E-03	5.8E-03	8.0E-03	1.2E-02	1.0E-02
SSE	8.0E-03	8.5E-03	4.1E-03	5.7E-03	7.9E-03	1.2E-02	1.0E-02
SE	6.0E-03	6.3E-03	3.3E-03	4.4E-03	5.9E-03	8.6E-03	7.5E-03
ESE	9.8E-03	1.0E-02	5.1E-03	7.0E-03	9.6E-03	1.4E-02	1.2E-02
E	6.8E-03	7.2E-03	3.6E-03	4.9E-03	6.7E-03	1.0E-02	8.6E-03
ENE	7.9E-03	8.3E-03	4.1E-03	5.6E-03	7.7E-03	1.2E-02	9.9E-03
NE	8.7E-03	9.2E-03	4.5E-03	6.2E-03	8.6E-03	1.3E-02	1.1E-02
NNE	1.5E-02	1.6E-02	7.9E-03	1.1E-02	1.5E-02	2.2E-02	1.9E-02

	Distance (m)						
Direction	1137	1171	1312	1308	1318	1238	1236
N	9.5E-03	9.0E-03	7.6E-03	7.6E-03	7.6E-03	8.3E-03	8.3E-03
NNW	4.0E-03	3.9E-03	3.3E-03	3.3E-03	3.3E-03	3.6E-03	3.6E-03
NW	3.2E-03	3.1E-03	2.6E-03	2.6E-03	2.6E-03	2.8E-03	2.9E-03
WNW	2.8E-03	2.7E-03	2.3E-03	2.3E-03	2.3E-03	2.5E-03	2.5E-03
W	3.7E-03	3.6E-03	3.0E-03	3.1E-03	3.0E-03	3.3E-03	3.3E-03
WSW	1.1E-02	1.1E-02	9.3E-03	9.3E-03	9.2E-03	1.0E-02	1.0E-02
SW	7.1E-03	6.8E-03	5.7E-03	5.7E-03	5.7E-03	6.2E-03	6.2E-03
SSW	1.1E-02	1.0E-02	8.5E-03	8.6E-03	8.5E-03	9.3E-03	9.4E-03
S	9.3E-03	8.9E-03	7.5E-03	7.6E-03	7.5E-03	8.2E-03	8.2E-03
SSE	9.3E-03	8.9E-03	7.5E-03	7.5E-03	7.4E-03	8.2E-03	8.2E-03
SE	6.9E-03	6.6E-03	5.6E-03	5.7E-03	5.6E-03	6.1E-03	6.1E-03
ESE	1.1E-02	1.1E-02	9.1E-03	9.2E-03	9.1E-03	1.0E-02	1.0E-02
E	7.8E-03	7.5E-03	6.3E-03	6.3E-03	6.3E-03	6.9E-03	6.9E-03
ENE	9.1E-03	8.7E-03	7.3E-03	7.4E-03	7.3E-03	8.0E-03	8.0E-03
NE	1.0E-02	9.6E-03	8.1E-03	8.1E-03	8.0E-03	8.8E-03	8.9E-03
NNE	1.7E-02	1.6E-02	1.4E-02	1.4E-02	1.4E-02	1.5E-02	1.5E-02

INDIVIDUAL EFFECTIVE DOSE EQUIVALENT RATE (mrem/y)
(All Radionuclides and Pathways)

	Distance (m)					
Direction	1850	1382	1190	1186	1731	1695
N	4.5E-03	7.0E-03	8.8E-03	8.9E-03	5.0E-03	5.2E-03
NNW	2.0E-03	3.1E-03	3.8E-03	3.8E-03	2.2E-03	2.3E-03
NW	1.6E-03	2.4E-03	3.0E-03	3.0E-03	1.8E-03	1.8E-03
WNW	1.5E-03	2.2E-03	2.7E-03	2.7E-03	1.6E-03	1.6E-03
W	1.9E-03	2.8E-03	3.5E-03	3.5E-03	2.1E-03	2.2E-03
WSW	5.5E-03	8.6E-03	1.1E-02	1.1E-02	6.1E-03	6.3E-03
SW	3.5E-03	5.3E-03	6.6E-03	6.6E-03	3.8E-03	3.9E-03
SSW	5.0E-03	7.9E-03	9.9E-03	1.0E-02	5.6E-03	5.8E-03
S	4.5E-03	7.0E-03	8.7E-03	8.8E-03	5.0E-03	5.1E-03
SSE	4.4E-03	6.9E-03	8.7E-03	8.7E-03	4.9E-03	5.0E-03
SE	3.5E-03	5.2E-03	6.5E-03	6.5E-03	3.8E-03	3.9E-03
ESE	5.4E-03	8.4E-03	1.1E-02	1.1E-02	6.0E-03	6.2E-03
E	3.8E-03	5.8E-03	7.3E-03	7.4E-03	4.2E-03	4.3E-03
ENE	4.4E-03	6.8E-03	8.5E-03	8.5E-03	4.8E-03	5.0E-03
NE	4.8E-03	7.5E-03	9.4E-03	9.4E-03	5.3E-03	5.5E-03
NNE	8.4E-03	1.3E-02	1.6E-02	1.6E-02	9.3E-03	9.5E-03

INDIVIDUAL LIFETIME RISK (deaths)
(All Radionuclides and Pathways)

Direction	Distance (m) 1252	1207	1926	1561	1265	969	1070
N	1.1E-07	1.1E-07	5.4E-08	7.5E-08	1.0E-07	1.6E-07	1.3E-07
NNW	4.4E-08	4.7E-08	2.4E-08	3.2E-08	4.4E-08	6.4E-08	5.6E-08
NW	3.5E-08	3.7E-08	1.9E-08	2.6E-08	3.5E-08	5.1E-08	4.4E-08
WNW	3.1E-08	3.3E-08	1.7E-08	2.3E-08	3.1E-08	4.5E-08	3.9E-08
W	4.1E-08	4.3E-08	2.2E-08	3.0E-08	4.0E-08	5.9E-08	5.1E-08
WSW	1.3E-07	1.4E-07	6.7E-08	9.2E-08	1.3E-07	1.9E-07	1.6E-07
SW	7.9E-08	8.3E-08	4.1E-08	5.7E-08	7.7E-08	1.2E-07	9.9E-08
SSW	1.2E-07	1.3E-07	6.0E-08	8.4E-08	1.2E-07	1.8E-07	1.5E-07
S	1.0E-07	1.1E-07	5.4E-08	7.4E-08	1.0E-07	1.5E-07	1.3E-07
SSE	1.0E-07	1.1E-07	5.2E-08	7.3E-08	1.0E-07	1.5E-07	1.3E-07
SE	7.7E-08	8.1E-08	4.2E-08	5.6E-08	7.6E-08	1.1E-07	9.7E-08
ESE	1.3E-07	1.3E-07	6.5E-08	9.0E-08	1.2E-07	1.9E-07	1.6E-07
E	8.7E-08	9.2E-08	4.5E-08	6.2E-08	8.6E-08	1.3E-07	1.1E-07
ENE	1.0E-07	1.1E-07	5.2E-08	7.2E-08	1.0E-07	1.5E-07	1.3E-07
NE	1.1E-07	1.2E-07	5.8E-08	8.0E-08	1.1E-07	1.7E-07	1.4E-07
NNE	1.9E-07	2.0E-07	1.0E-07	1.4E-07	1.9E-07	2.8E-07	2.4E-07

Direction	Distance (m) 1137	1171	1312	1308	1318	1238	1236
N	1.2E-07	1.2E-07	9.8E-08	9.9E-08	9.7E-08	1.1E-07	1.1E-07
NNW	5.1E-08	4.9E-08	4.2E-08	4.2E-08	4.1E-08	4.5E-08	4.5E-08
NW	4.1E-08	3.9E-08	3.3E-08	3.3E-08	3.3E-08	3.6E-08	3.6E-08
WNW	3.6E-08	3.4E-08	2.9E-08	2.9E-08	2.9E-08	3.1E-08	3.2E-08
W	4.7E-08	4.5E-08	3.8E-08	3.9E-08	3.8E-08	4.2E-08	4.2E-08
WSW	1.5E-07	1.4E-07	1.2E-07	1.2E-07	1.2E-07	1.3E-07	1.3E-07
SW	9.1E-08	8.7E-08	7.3E-08	7.4E-08	7.3E-08	8.0E-08	8.0E-08
SSW	1.4E-07	1.3E-07	1.1E-07	1.1E-07	1.1E-07	1.2E-07	1.2E-07
S	1.2E-07	1.2E-07	9.7E-08	9.7E-08	9.6E-08	1.1E-07	1.1E-07
SSE	1.2E-07	1.1E-07	9.6E-08	9.6E-08	9.5E-08	1.1E-07	1.1E-07
SE	8.9E-08	8.5E-08	7.2E-08	7.2E-08	7.2E-08	7.8E-08	7.9E-08
ESE	1.5E-07	1.4E-07	1.2E-07	1.2E-07	1.2E-07	1.3E-07	1.3E-07
E	1.0E-07	9.6E-08	8.1E-08	8.1E-08	8.0E-08	8.8E-08	8.9E-08
ENE	1.2E-07	1.1E-07	9.4E-08	9.5E-08	9.3E-08	1.0E-07	1.0E-07
NE	1.3E-07	1.2E-07	1.0E-07	1.0E-07	1.0E-07	1.1E-07	1.1E-07
NNE	2.2E-07	2.1E-07	1.8E-07	1.8E-07	1.8E-07	2.0E-07	2.0E-07

INDIVIDUAL LIFETIME RISK (deaths)
(All Radionuclides and Pathways)

	Distance (m)					
Direction	1850	1382	1190	1186	1731	1695
N	5.8E-08	9.1E-08	1.1E-07	1.1E-07	6.4E-08	6.6E-08
NNW	2.5E-08	3.9E-08	4.8E-08	4.8E-08	2.8E-08	2.9E-08
NW	2.0E-08	3.0E-08	3.8E-08	3.8E-08	2.2E-08	2.3E-08
WNW	1.8E-08	2.7E-08	3.3E-08	3.3E-08	1.9E-08	2.0E-08
W	2.4E-08	3.6E-08	4.4E-08	4.4E-08	2.6E-08	2.7E-08
WSW	7.1E-08	1.1E-07	1.4E-07	1.4E-07	7.8E-08	8.1E-08
SW	4.4E-08	6.8E-08	8.5E-08	8.5E-08	4.8E-08	5.0E-08
SSW	6.4E-08	1.0E-07	1.3E-07	1.3E-07	7.1E-08	7.4E-08
S	5.7E-08	9.0E-08	1.1E-07	1.1E-07	6.3E-08	6.6E-08
SSE	5.6E-08	8.8E-08	1.1E-07	1.1E-07	6.2E-08	6.4E-08
SE	4.4E-08	6.7E-08	8.3E-08	8.3E-08	4.9E-08	5.0E-08
ESE	6.9E-08	1.1E-07	1.4E-07	1.4E-07	7.7E-08	7.9E-08
E	4.8E-08	7.5E-08	9.4E-08	9.5E-08	5.3E-08	5.5E-08
ENE	5.6E-08	8.7E-08	1.1E-07	1.1E-07	6.2E-08	6.4E-08
NE	6.1E-08	9.6E-08	1.2E-07	1.2E-07	6.8E-08	7.0E-08
NNE	1.1E-07	1.7E-07	2.1E-07	2.1E-07	1.2E-07	1.2E-07

C A P 8 8 - P C

Version 1.00

Clean Air Act Assessment Package - 1988

S Y N O P S I S R E P O R T

Non-Radon Individual Assessment
Aug 23, 1995 8:10 am

Facility: FERNALD ENVIRONMENTAL MANAGEMENT PROJECT
Address: P.O. BOX 538704
7400 WILLEY ROAD
City: CINCINNATI
State: OH Zip: 45253-8704

Effective Dose Equivalent
(mrem/year)

1.46E-02

At This Location: 1265 Meters North Northeast

Source Category: REMEDIATION SITE
Source Type: Stack
Emission Year: 1994

Comments: Plant 8 West Eimco Hood & vacuum pump exhaust
1 = Vacuum Pump vent, 2 = Hood exhaust
Monitor assessment

Dataset Name: P240-G2
Dataset Date: Aug 23, 1995 8:09 am
Wind File: WNDFILES\FEMPSTD.WND

MAXIMALLY EXPOSED INDIVIDUAL

Location Of The Individual: 1265 Meters North Northeast
Lifetime Fatal Cancer Risk: 1.90E-07

ORGAN DOSE EQUIVALENT SUMMARY

Organ	Dose Equivalent (mrem/y)
GONADS	4.81E-05
BREAST	5.50E-05
R MAR	1.17E-03
LUNGS	1.13E-01
THYROID	4.69E-05
ENDOST	1.63E-02
RMNDR	1.29E-03
EFFEC	1.46E-02

RADIONUCLIDE EMISSIONS DURING THE YEAR 1994

Nuclide	Class	Size	Source #1 Ci/y	Source #2 Ci/y	TOTAL Ci/y
RA-226	W	1.00	2.6E-07	4.8E-08	3.1E-07
RA-228	W	1.00	1.0E-06	1.9E-07	1.2E-06
TH-228	Y	1.00	1.1E-05	2.0E-06	1.3E-05
TH-230	Y	1.00	7.7E-07	1.4E-07	9.1E-07
TH-232	Y	1.00	1.7E-06	3.2E-07	2.0E-06
U-234	Y	1.00	2.9E-04	5.4E-05	3.4E-04
U-235	Y	1.00	1.5E-05	2.9E-06	1.8E-05
U-236	Y	1.00	1.5E-05	2.0E-06	1.7E-05
U-238	Y	1.00	3.8E-04	7.1E-05	4.5E-04
AC-228	Y	1.00	1.0E-06	1.9E-07	1.2E-06
RA-224	W	1.00	1.1E-05	2.0E-06	1.3E-05
TH-231	Y	1.00	7.3E-08	1.4E-08	8.7E-08
TH-234	Y	1.00	3.8E-04	7.1E-05	4.5E-04

SITE INFORMATION

Temperature:	12 degrees C
Precipitation:	98 cm/y
Mixing Height:	950 m

SOURCE INFORMATION

Source Number:	1	2
Stack Height (m):	13.72	13.72
Diameter (m):	0.20	0.41
Plume Rise Momentum (m/s): (Exit Velocity)	1.31E+01	5.46E+00

AGRICULTURAL DATA

	Vegetable	Milk	Meat
Fraction Home Produced:	0.700	0.399	0.442
Fraction From Assessment Area:	0.300	0.601	0.558
Fraction Imported:	0.000	0.000	0.000

Food Arrays were not generated for this run.
Default Values used.

DISTANCES USED FOR MAXIMUM INDIVIDUAL ASSESSMENT

1265	1537	2001	1897	2573	2273	2298	1631	1468	2305
2372	1699	2333	1596	1913	2005	1958	1839	1870	1809

C A P 8 8 - P C

Version 1.00

Clean Air Act Assessment Package - 1988

D O S E A N D R I S K E Q U I V A L E N T S U M M A R I E S

Non-Radon Individual Assessment
Aug 23, 1995 8:10 am

Facility: FERNALD ENVIRONMENTAL MANAGEMENT PROJECT
Address: P.O. BOX 538704
7400 WILLEY ROAD
City: CINCINNATI
State: OH Zip: 45253-8704

Source Category: REMEDIATION SITE
Source Type: Stack
Emission Year: 1994

Comments: Plant 8 West Eimco Hood & vacuum pump exhaust
1 = Vacuum Pump vent, 2 = Hood exhaust

Dataset Name: P240-G2
Dataset Date: Aug 23, 1995 8:09 am
Wind File: WNDFILES\FEMPSTD.WND

ORGAN DOSE EQUIVALENT SUMMARY

Organ	Selected Individual (mrem/y)
GONADS	4.81E-05
BREAST	5.50E-05
R MAR	1.17E-03
LUNGS	1.13E-01
THYROID	4.69E-05
ENDOST	1.63E-02
RMNDR	1.29E-03
EFFEC	1.46E-02

PATHWAY EFFECTIVE DOSE EQUIVALENT SUMMARY

Pathway	Selected Individual (mrem/y)
INGESTION	9.32E-04
INHALATION	1.36E-02
AIR IMMERSION	5.99E-10
GROUND SURFACE	9.50E-06
INTERNAL	1.46E-02
EXTERNAL	9.50E-06
TOTAL	1.46E-02

NUCLIDE EFFECTIVE DOSE EQUIVALENT SUMMARY

Nuclide	Selected Individual (mrem/y)
RA-226	7.85E-07
RA-228	1.28E-06
TH-228	4.23E-04
TH-230	2.97E-05
TH-232	9.51E-05
U-234	6.16E-03
U-235	3.14E-04
U-236	2.90E-04
U-238	7.25E-03
AC-228	1.37E-08
RA-224	5.95E-06
TH-231	1.13E-11
TH-234	5.04E-06
TOTAL	1.46E-02

CANCER RISK SUMMARY

Cancer	Selected Individual Total Lifetime Fatal Cancer Risk
LEUKEMIA	1.32E-09
BONE	8.65E-10
THYROID	1.08E-11
BREAST	1.23E-10
LUNG	1.84E-07
STOMACH	7.48E-11
BOWEL	1.34E-10
LIVER	7.68E-11
PANCREAS	4.76E-11
URINARY	2.76E-09
OTHER	5.82E-11
TOTAL	1.90E-07

PATHWAY RISK SUMMARY

Pathway	Selected Individual Total Lifetime Fatal Cancer Risk
INGESTION	4.95E-09
INHALATION	1.85E-07
AIR IMMERSION	1.37E-14
GROUND SURFACE	2.18E-10
INTERNAL	1.90E-07
EXTERNAL	2.18E-10
TOTAL	1.90E-07

NUCLIDE RISK SUMMARY

Nuclide	Selected Individual Total Lifetime Fatal Cancer Risk
RA-226	1.01E-11
RA-228	1.28E-11
TH-228	8.48E-09
TH-230	2.43E-10
TH-232	5.36E-10
U-234	7.88E-08
U-235	4.12E-09
U-236	3.71E-09
U-238	9.36E-08
AC-228	2.76E-13
RA-224	1.33E-10
TH-231	3.30E-16
TH-234	1.54E-10
TOTAL	1.90E-07

INDIVIDUAL EFFECTIVE DOSE EQUIVALENT RATE (mrem/y)
(All Radionuclides and Pathways)

Direction	Distance (m) 1265	1537	2001	1897	2573	2273	2298
N	8.0E-03	5.9E-03	4.0E-03	4.3E-03	2.7E-03	3.3E-03	3.2E-03
NNW	3.4E-03	2.6E-03	1.7E-03	1.9E-03	1.2E-03	1.5E-03	1.4E-03
NW	2.7E-03	2.0E-03	1.4E-03	1.5E-03	1.0E-03	1.2E-03	1.2E-03
WNW	2.4E-03	1.8E-03	1.2E-03	1.3E-03	8.9E-04	1.0E-03	1.0E-03
W	3.1E-03	2.4E-03	1.7E-03	1.8E-03	1.2E-03	1.4E-03	1.4E-03
WSW	9.7E-03	7.2E-03	4.8E-03	5.3E-03	3.3E-03	4.0E-03	3.9E-03
SW	6.0E-03	4.5E-03	3.0E-03	3.3E-03	2.1E-03	2.5E-03	2.5E-03
SSW	9.0E-03	6.6E-03	4.4E-03	4.8E-03	3.0E-03	3.6E-03	3.5E-03
S	7.9E-03	5.9E-03	3.9E-03	4.3E-03	2.7E-03	3.2E-03	3.2E-03
SSE	7.8E-03	5.8E-03	3.8E-03	4.1E-03	2.6E-03	3.1E-03	3.1E-03
SE	5.9E-03	4.4E-03	3.1E-03	3.3E-03	2.2E-03	2.6E-03	2.6E-03
ESE	9.6E-03	7.1E-03	4.8E-03	5.2E-03	3.3E-03	3.9E-03	3.9E-03
E	6.6E-03	4.9E-03	3.3E-03	3.6E-03	2.3E-03	2.7E-03	2.7E-03
ENE	7.7E-03	5.7E-03	3.8E-03	4.1E-03	2.6E-03	3.1E-03	3.1E-03
NE	8.5E-03	6.3E-03	4.2E-03	4.6E-03	2.9E-03	3.5E-03	3.4E-03
NNE	1.5E-02	1.1E-02	7.4E-03	8.0E-03	5.1E-03	6.1E-03	6.0E-03

Direction	Distance (m) 1631	1468	2305	2372	1699	2333	1596
N	5.4E-03	6.3E-03	3.2E-03	3.1E-03	5.1E-03	3.1E-03	5.6E-03
NNW	2.3E-03	2.7E-03	1.4E-03	1.4E-03	2.2E-03	1.4E-03	2.4E-03
NW	1.9E-03	2.2E-03	1.2E-03	1.1E-03	1.8E-03	1.1E-03	1.9E-03
WNW	1.7E-03	1.9E-03	1.0E-03	9.9E-04	1.6E-03	1.0E-03	1.7E-03
W	2.2E-03	2.5E-03	1.4E-03	1.3E-03	2.1E-03	1.4E-03	2.3E-03
WSW	6.6E-03	7.8E-03	3.9E-03	3.7E-03	6.2E-03	3.8E-03	6.8E-03
SW	4.1E-03	4.8E-03	2.5E-03	2.4E-03	3.9E-03	2.4E-03	4.2E-03
SSW	6.1E-03	7.1E-03	3.5E-03	3.4E-03	5.7E-03	3.5E-03	6.3E-03
S	5.4E-03	6.3E-03	3.2E-03	3.0E-03	5.0E-03	3.1E-03	5.5E-03
SSE	5.3E-03	6.2E-03	3.1E-03	2.9E-03	4.9E-03	3.0E-03	5.4E-03
SE	4.1E-03	4.7E-03	2.5E-03	2.4E-03	3.9E-03	2.5E-03	4.2E-03
ESE	6.5E-03	7.6E-03	3.9E-03	3.7E-03	6.1E-03	3.8E-03	6.7E-03
E	4.5E-03	5.3E-03	2.7E-03	2.6E-03	4.2E-03	2.6E-03	4.6E-03
ENE	5.2E-03	6.1E-03	3.1E-03	2.9E-03	4.9E-03	3.0E-03	5.4E-03
NE	5.8E-03	6.8E-03	3.4E-03	3.2E-03	5.4E-03	3.3E-03	6.0E-03
NNE	1.0E-02	1.2E-02	6.0E-03	5.8E-03	9.4E-03	5.9E-03	1.0E-02

INDIVIDUAL EFFECTIVE DOSE EQUIVALENT RATE (mrem/y)
(All Radionuclides and Pathways)

	Distance (m)					
Direction	1913	2005	1958	1839	1870	1809
N	4.2E-03	3.9E-03	4.1E-03	4.5E-03	4.4E-03	4.6E-03
NNW	1.9E-03	1.7E-03	1.8E-03	2.0E-03	1.9E-03	2.0E-03
NW	1.5E-03	1.4E-03	1.4E-03	1.6E-03	1.5E-03	1.6E-03
WNW	1.3E-03	1.2E-03	1.3E-03	1.4E-03	1.4E-03	1.4E-03
W	1.8E-03	1.7E-03	1.7E-03	1.9E-03	1.8E-03	1.9E-03
WSW	5.2E-03	4.8E-03	5.0E-03	5.5E-03	5.4E-03	5.7E-03
SW	3.2E-03	3.0E-03	3.1E-03	3.4E-03	3.4E-03	3.5E-03
SSW	4.7E-03	4.4E-03	4.6E-03	5.0E-03	4.9E-03	5.2E-03
S	4.2E-03	3.9E-03	4.1E-03	4.5E-03	4.4E-03	4.6E-03
SSE	4.1E-03	3.8E-03	3.9E-03	4.3E-03	4.2E-03	4.5E-03
SE	3.3E-03	3.1E-03	3.2E-03	3.5E-03	3.4E-03	3.5E-03
ESE	5.1E-03	4.7E-03	4.9E-03	5.4E-03	5.3E-03	5.5E-03
E	3.5E-03	3.3E-03	3.4E-03	3.7E-03	3.6E-03	3.8E-03
ENE	4.1E-03	3.8E-03	3.9E-03	4.3E-03	4.2E-03	4.4E-03
NE	4.5E-03	4.2E-03	4.4E-03	4.8E-03	4.7E-03	4.9E-03
NNE	7.9E-03	7.4E-03	7.7E-03	8.4E-03	8.2E-03	8.6E-03

INDIVIDUAL LIFETIME RISK (deaths)
(All Radionuclides and Pathways)

	Distance (m)						
Direction	1265	1537	2001	1897	2573	2273	2298
N	1.0E-07	7.6E-08	5.1E-08	5.5E-08	3.4E-08	4.2E-08	4.1E-08
NNW	4.3E-08	3.3E-08	2.2E-08	2.4E-08	1.5E-08	1.8E-08	1.8E-08
NW	3.4E-08	2.6E-08	1.7E-08	1.9E-08	1.2E-08	1.5E-08	1.4E-08
WNW	3.0E-08	2.3E-08	1.5E-08	1.7E-08	1.1E-08	1.3E-08	1.3E-08
W	4.0E-08	3.0E-08	2.1E-08	2.2E-08	1.5E-08	1.7E-08	1.7E-08
WSW	1.3E-07	9.4E-08	6.2E-08	6.8E-08	4.2E-08	5.1E-08	5.0E-08
SW	7.7E-08	5.7E-08	3.9E-08	4.2E-08	2.7E-08	3.2E-08	3.1E-08
SSW	1.2E-07	8.6E-08	5.6E-08	6.1E-08	3.8E-08	4.6E-08	4.5E-08
S	1.0E-07	7.6E-08	5.0E-08	5.5E-08	3.4E-08	4.1E-08	4.1E-08
SSE	1.0E-07	7.4E-08	4.9E-08	5.3E-08	3.3E-08	4.0E-08	3.9E-08
SE	7.6E-08	5.7E-08	3.9E-08	4.2E-08	2.8E-08	3.3E-08	3.2E-08
ESE	1.2E-07	9.2E-08	6.1E-08	6.6E-08	4.2E-08	5.0E-08	4.9E-08
E	8.5E-08	6.3E-08	4.2E-08	4.6E-08	2.9E-08	3.5E-08	3.4E-08
ENE	9.9E-08	7.3E-08	4.9E-08	5.3E-08	3.3E-08	4.0E-08	3.9E-08
NE	1.1E-07	8.1E-08	5.4E-08	5.9E-08	3.6E-08	4.4E-08	4.3E-08
NNE	1.9E-07	1.4E-07	9.6E-08	1.0E-07	6.6E-08	7.9E-08	7.8E-08

	Distance (m)						
Direction	1631	1468	2305	2372	1699	2333	1596
N	7.0E-08	8.2E-08	4.1E-08	3.9E-08	6.5E-08	4.0E-08	7.2E-08
NNW	3.0E-08	3.5E-08	1.8E-08	1.7E-08	2.8E-08	1.7E-08	3.1E-08
NW	2.4E-08	2.8E-08	1.4E-08	1.4E-08	2.2E-08	1.4E-08	2.4E-08
WNW	2.1E-08	2.4E-08	1.3E-08	1.2E-08	2.0E-08	1.2E-08	2.1E-08
W	2.8E-08	3.2E-08	1.7E-08	1.6E-08	2.6E-08	1.7E-08	2.9E-08
WSW	8.5E-08	1.0E-07	5.0E-08	4.8E-08	8.0E-08	4.9E-08	8.8E-08
SW	5.3E-08	6.2E-08	3.1E-08	3.0E-08	4.9E-08	3.1E-08	5.4E-08
SSW	7.8E-08	9.2E-08	4.5E-08	4.3E-08	7.3E-08	4.4E-08	8.1E-08
S	6.9E-08	8.1E-08	4.0E-08	3.9E-08	6.5E-08	4.0E-08	7.1E-08
SSE	6.8E-08	8.0E-08	3.9E-08	3.7E-08	6.3E-08	3.8E-08	7.0E-08
SE	5.2E-08	6.1E-08	3.2E-08	3.1E-08	5.0E-08	3.2E-08	5.4E-08
ESE	8.4E-08	9.8E-08	4.9E-08	4.7E-08	7.9E-08	4.8E-08	8.7E-08
E	5.7E-08	6.8E-08	3.4E-08	3.2E-08	5.4E-08	3.3E-08	5.9E-08
ENE	6.7E-08	7.9E-08	3.9E-08	3.7E-08	6.3E-08	3.8E-08	6.9E-08
NE	7.4E-08	8.7E-08	4.3E-08	4.1E-08	7.0E-08	4.2E-08	7.7E-08
NNE	1.3E-07	1.5E-07	7.8E-08	7.4E-08	1.2E-07	7.6E-08	1.3E-07

INDIVIDUAL LIFETIME RISK (deaths)
(All Radionuclides and Pathways)

	Distance (m)					
Direction	1913	2005	1958	1839	1870	1809
N	5.4E-08	5.1E-08	5.2E-08	5.8E-08	5.6E-08	5.9E-08
NNW	2.3E-08	2.2E-08	2.3E-08	2.5E-08	2.4E-08	2.6E-08
NW	1.9E-08	1.7E-08	1.8E-08	2.0E-08	1.9E-08	2.0E-08
WNW	1.6E-08	1.5E-08	1.6E-08	1.7E-08	1.7E-08	1.8E-08
W	2.2E-08	2.1E-08	2.1E-08	2.3E-08	2.3E-08	2.4E-08
WSW	6.7E-08	6.2E-08	6.5E-08	7.1E-08	6.9E-08	7.3E-08
SW	4.1E-08	3.9E-08	4.0E-08	4.4E-08	4.3E-08	4.5E-08
SSW	6.1E-08	5.6E-08	5.8E-08	6.5E-08	6.3E-08	6.6E-08
S	5.4E-08	5.0E-08	5.2E-08	5.7E-08	5.6E-08	5.9E-08
SSE	5.2E-08	4.9E-08	5.0E-08	5.6E-08	5.4E-08	5.7E-08
SE	4.2E-08	3.9E-08	4.1E-08	4.4E-08	4.3E-08	4.5E-08
ESE	6.5E-08	6.1E-08	6.3E-08	7.0E-08	6.8E-08	7.1E-08
E	4.5E-08	4.2E-08	4.3E-08	4.8E-08	4.7E-08	4.9E-08
ENE	5.2E-08	4.9E-08	5.0E-08	5.6E-08	5.4E-08	5.7E-08
NE	5.8E-08	5.4E-08	5.6E-08	6.2E-08	6.0E-08	6.3E-08
NNE	1.0E-07	9.6E-08	9.9E-08	1.1E-07	1.1E-07	1.1E-07

OHIO ENVIRONMENTAL PROTECTION AGENCY
APPLICATION FOR A PERMIT TO OPERATE
AN AIR CONTAMINANT SOURCE

7201

D.O.E.-Fernald Environmental Management Project
Facility Name

Mr. Stephen M. Beckman
Person to Contact

7400 Willey Road
Facility Address

Post Office Box 538704
Mailing Address

Fernald Hamilton 45030
City County Zip

Cincinnati OH 45253-8704
City State Zip

513/ 648-3000
Telephone Area Number

513/ 648-5264
Telephone

#1431110128- P248
(Application no., if this is a renewal application)

4953
Std. Ind. Class. Code

1. Complete and attach any of the following appendices most appropriate to the air contaminant source. In addition, a compliance time schedule form is to be attached when applicable. Check as appropriate the following:

X Appendix A, Process
___Appendix B, Fuel-Burning Equipment
___Appendix C, Incinerator
___Appendix D, Surface Coating or Printing Operation
___Appendix E, Storage Tank
___Appendix H, Gasoline Dispensing Facility
___Appendix J, Loading Rack at Bulk Gasoline Plant or Terminal
___Appendix K, Surface Coating Line or Printing Line
___Appendix L, Solvent Metal Cleaning
___Appendix M, Fugitive Dust Emission Sources
___Specify Appendix No.
___Appendix N, Rubber Tire Manufacturing
___Appendix O, Dry Cleaning Facility
___Appendix P, Landfills
___Other Appendix ___
___Compliance Time Schedule

2. Description of Source (same as used on appendix): Plant 8 - East Eimco Filter

3. Your identification for Source (same as used on appendix): 8-011

I, being the individual specified in Rule 3745-35-02(B) of the Ohio Administrative Code, hereby apply for a Permit to Operate the air contaminant source(s) described herein. As required, the following additional documents are submitted as part of this application (describe all attachments):

Attachments:
Appendix A
Process Flow Diagram
Emission Calculations
NESHAP Subpart H Calculations

Authorized Signature
Terence D. Hagen
Director Environmental Compliance
Title
9/29/95
Date

000063

*Pursuant to OAC Rule 3745-35-02(B) (Permit to Operate).
Operation of an air contaminant source without an effective permit to operate is prohibited to 3704.05 Ohio Revised Code.

For Official Use Only

Premise No. / / /
Source No. /
Application No. /

OEPA NO. 1431110128 P248
A-1
FEMP ID NO. 8-011

APPENDIX A, PROCESS

PROCESS DATA

1. Name of process Plant 8 - East Eimco Filter

2. End product of this process Slag Leach Filter Cake, Neutralized Sump Cake and Filtrate

3. Primary process equipment East Eimco Vacuum Filter

Your identification 8-011 Year Installed 1955

4. Manufacturer Eimco Make or Model Unknown

5. Capacity of equipment (lbs./hr): Rated 9174 lb/hr Max. 10829 lb/hr

6. Method of exhaust ventilation: [X] Stack [ ] Window fan [ ] Roof vent
[X] Other, describe Quickdraft fan
Are there multiple exhausts? [X] Yes [X] No

OPERATING DATA

7. Normal operating schedule: 24 hrs./day, 5 days/wk., 50 wks./year.

8. Percent annual production (finished units) by season:
Winter 25 Spring 25 Summer 25 Fall 25

9. Hourly production rates (lbs.): Average 9174 Maximum 10829

10. Annual production (indicate units) 6,600,000 gallons (filtered)
projected percent annual increase in production -0-

11. Type of operation: [X] Continuous [ ] Batch

12. If batch, indicate Minutes per cycle _____ Minutes between cycles ____

13. Materials used in process:

List of Raw Materials	Principal Use	Amount (lbs./hr.)
Slag Leach Slurry and	To be filtered	9174 lb/hr
Neutralized Sump Liquor		
Dicalite & Water slurry	Filter Precoat	1200 gal/day

14. A PROCESS FLOW DIAGRAM MUST BE INCLUDED WITH THIS APPENDIX. Show entry and exi points of all raw materials, intermediate products, by products and finishe products. Label all materials including airborne contaminants and other wast materials. Label the process equipment.

See attached Process Flow Diagram

OEPA NO. 1431110128 P248
FEMP ID NO. 8-011

CONTROL EQUIPMENT

Control Equipment Code:

(A) Settling Chamber
(B) Cyclone
(C) Multiple Cyclone
(D) Electrostatic Precipitator
(E) Fabric Filter
(F) Spray Chamber
(G) Cyclonic Scrubber
(H) Impingement Scrubber
(I) Orifice Scrubber
(J) Venturi Scrubber
(K) Plate or Tray Tower
(L) Packing Tower
(M) Adsorber
(N) Condenser
(O) Afterburner - Catalytic
(P) Afterburner - Thermal
(Q) Other, Describe_____

15. Control Equipment Data: N/A

Item	Primary Collector	Secondary Collector
(a) Type (See above Code)		
(b) Manufacturer		
(c) Model No.		
(d) Year Installed		
(e) Your Identification		
(f) Pollutant Controlled		
(g) Controlled pollutant emission rate (if known)		
(h) Pressure Drop		
(i) Design efficiency		
(j) Operating efficiency		

STACK DATA

16. Your Stack Identification East Eimco Nash Vacuum Pump Exhaust (EP8-015)

17. Are other sources vented to this stack? [X] Yes [ ] No
If yes, identify sources West Eimco Nash Vacuum Pump (8-010)

18. Type: [X] Round, top inside diameter dimension 8 inches
[ ] Rectangular, top inside dimensions (L)_____ X (W)_____

19. Height: Above roof 3 ft., above ground 45 ft.

20. Exit gas: Temp. Amb. °F, Volume 900 ACFM, Velocity 2600 ft./min.

21. Continuous monitoring equipment: [ ] Yes [X] No
If yes, indicate : Type _____, Manufacturer _____

Make or Model _____, Pollutant(s) monitored _____

22. Emission data: Emissions from this source have been determined and such data is included with this appendix: [X] Yes [ ] No
If yes, check method: [ ] Stack Test [X] Emission Factor [ ] Material Balance

Completed by Kip Klee, Date 08/17/95

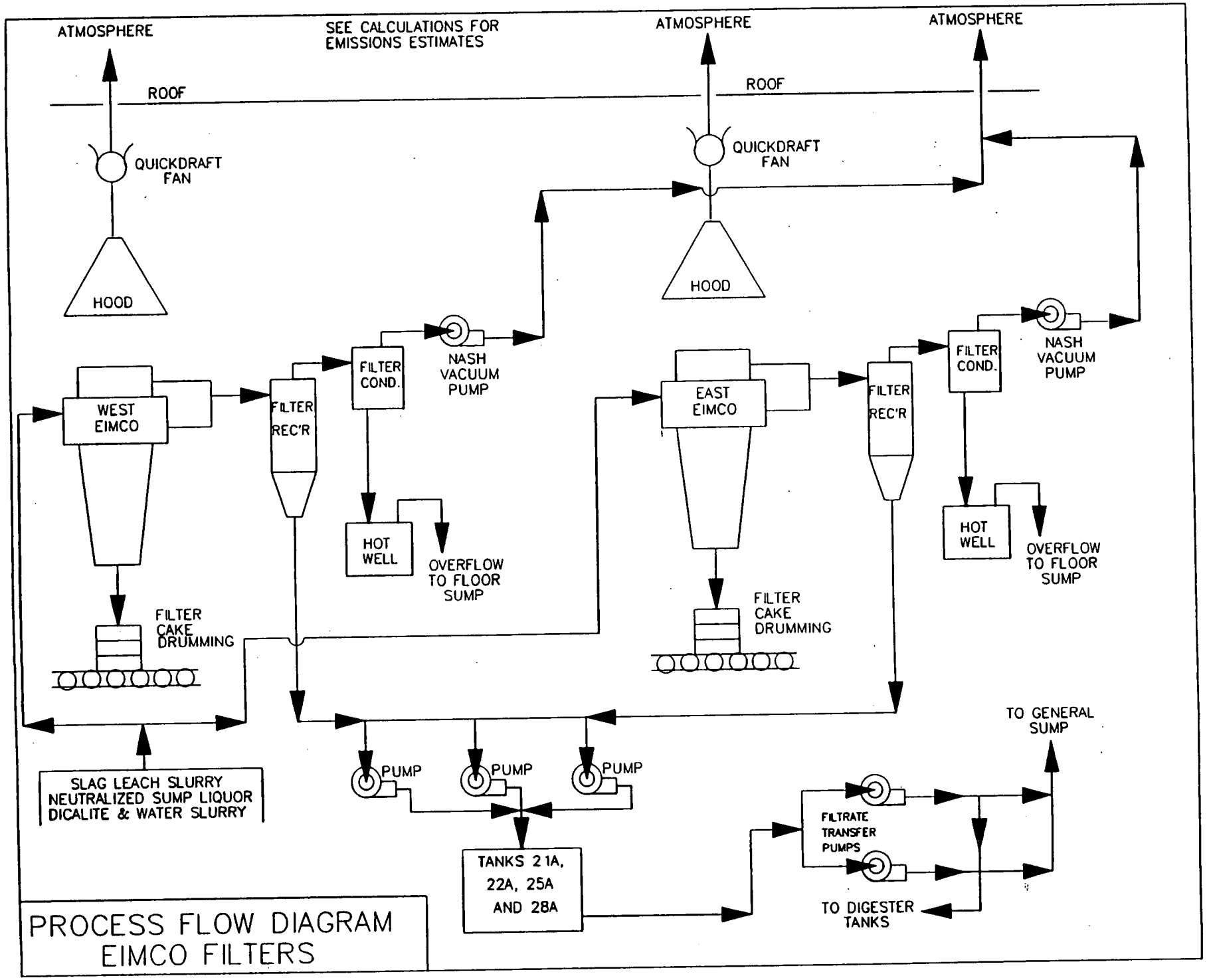
ATMOSPHERE
SEE CALCULATIONS FOR EMISSIONS ESTIMATES
ATMOSPHERE
ATMOSPHERE
ROOF
ROOF
QUICKDRAFT FAN
QUICKDRAFT FAN
HOOD
HOOD
NASH VACUUM PUMP
FILTER COND.
WEST EIMCO
FILTER REC'R
HOT WELL
OVERFLOW TO FLOOR SUMP
FILTER CAKE DRUMMING
EAST EIMCO
FILTER REC'R
FILTER COND.
NASH VACUUM PUMP
HOT WELL
OVERFLOW TO FLOOR SUMP
FILTER CAKE DRUMMING
TO GENERAL SUMP
SLAG LEACH SLURRY
NEUTRALIZED SUMP LIQUOR
DICALITE & WATER SLURRY
PUMP
PUMP
PUMP
TANKS 21A, 22A, 25A AND 28A
FILTRATE TRANSFER PUMPS
TO DIGESTER TANKS
PROCESS FLOW DIAGRAM
EIMCO FILTERS

000072

OEPA NO. 1431110128 P248
FEMP ID NO. 8-011

CONTROL EQUIPMENT

Control Equipment Code:

(A) Settling Chamber
(B) Cyclone
(C) Multiple Cyclone
(D) Electrostatic Precipitator
(E) Fabric Filter
(F) Spray Chamber
(G) Cyclonic Scrubber
(H) Impingement Scrubber
(I) Orifice Scrubber
(J) Venturi Scrubber
(K) Plate or Tray Tower
(L) Packing Tower
(M) Adsorber
(N) Condenser
(O) Afterburner - Catalytic
(P) Afterburner - Thermal
(Q) Other, Describe_____

15. Control Equipment Data: N/A

Item	Primary Collector	Secondary Collector
(a) Type (See above Code)		
(b) Manufacturer		
(c) Model No.		
(d) Year Installed		
(e) Your Identification		
(f) Pollutant Controlled		
(g) Controlled pollutant emission rate (if known)		
(h) Pressure Drop		
(i) Design efficiency		
(j) Operating efficiency		

STACK DATA

16. Your Stack Identification East Eimco Hood Exhaust (EP8-015A)

17. Are other sources vented to this stack? [ ] Yes [X] No
If yes, identify sources_____

18. Type: [X] Round, top inside diameter dimension 16 inches
[ ] Rectangular, top inside dimensions (L)_____ X (W)_____

19. Height: Above roof 3 ft., above ground 45 ft.

20. Exit gas: Temp. Amb. °F, Volume 1500 ACFM, Velocity 1079 ft./min.

21. Continuous monitoring equipment: [ ] Yes [X] No
If yes, indicate : Type _____, Manufacturer _____

Make or Model _____, Pollutant(s) monitored _____

22. Emission data: Emissions from this source have been determined and such data is included with this appendix: [X] Yes [ ] No
If yes, check method: [ ] Stack Test [X] Emission Factor [ ] Material Balance

Completed by Kip Klee, Date 08/17/95

URANIUM AND PARTICULATE EMISSIONS FROM THE PLANT 8 EAST EIMCO VACUUM FILTER VACUUM PUMP

1. VACUUM PUMP EMISSION SUMMARY

EMISSIONS	PARTICULATE		URANIUM	
	Lbs/hr	Tons/yr	Lbs/hr	Tons/yr
ACTUAL	5.00E-03	1.50E-02	4.48E-04	1.34E-03
POTENTIAL	7.50E-03	3.29E-02	6.72E-04	2.94E-03
UNCONTROLLED POTENTIAL	7.50E-03	3.29E-02	6.72E-04	2.94E-03
ALLOWABLE	12.7	55.6	6.72E-04	2.94E-03

2. ASSUMPTIONS and TEST DATA

A. Assume vacuum pump emissions are similar to those of the East Oliver filter and that emissions from the vacuum pump may be based on the results of the stack test performed on May 10, 1995 by the Hayden Environmental Group, Inc. On the East Oliver filter. Results of the stack test indicate uranium emissions of 4.48E-04 lb/hr and a total particulate release rate of 5.00E-03 lb/hr.

B. Normal operating hours are 6000 hours per year; Potential operating hours are 8760 hours per year.

C. Potential emissions are assumed to be 1.5 times normal emissions.

3. URANIUM EMISSIONS

A. Actual uranium emissions:

U = 4.48E-04 lb/hr (from stack test)

$$\frac{4.48E\text{-}04\ \text{lb U}}{\text{hour}} \left| \frac{6000\ \text{hrs}}{\text{year}} \right| \frac{1\ \text{ton}}{2000\ \text{lbs}} = 1.34E\text{-}04\ \frac{\text{tons U}}{\text{year}}$$

B. Potential uranium emissions:

$$\frac{4.48E\text{-}04\ \text{lb U}}{\text{hr}} \left| \frac{1.5}{} \right| = 6.72E\text{-}04\ \frac{\text{lb U}}{\text{hr}}$$

$$\frac{6.72E\text{-}04\ \text{lb U}}{\text{hour}} \left| \frac{8760\ \text{hrs}}{\text{year}} \right| \frac{1\ \text{ton}}{2000\ \text{lbs}} = 2.94E\text{-}03\ \frac{\text{tons U}}{\text{year}}$$

C. Uncontrolled potential uranium emissions:

Since there is no control equipment on this stack, the uncontrolled potential emissions will equal the potential emissions.

D. Allowable uranium emissions:

The allowable uranium emissions are equal to the potential uranium emissions.

---

4. PARTICULATE (PM) EMISSIONS

A. Actual particulate (PM) emissions:

PM = 5.00E-03 lb/hr (from stack test)

$$\frac{5.00\text{E-03 lb PM}}{\text{hr}} \left| \frac{6000 \text{ hrs}}{\text{year}} \right| \frac{1 \text{ ton}}{2000 \text{ lbs}} = 1.50\text{E-02} \frac{\text{tons PM}}{\text{year}}$$

B. Potential particulate emissions:

$$\frac{5.00\text{-03 lb U}}{\text{hour}} \left| \frac{1.5}{} \right| = 7.50\text{E-03} \frac{\text{lb PM}}{\text{hr}}$$

$$\frac{7.50\text{E-03 lb PM}}{\text{hour}} \left| \frac{8760 \text{ hrs}}{\text{year}} \right| \frac{1 \text{ ton}}{2000 \text{ lbs}} = 3.29\text{E-02} \frac{\text{tons PM}}{\text{year}}$$

C. Uncontrolled potential particulate emissions:

Since there is no control equipment on this stack, the uncontrolled potential emissions will equal the potential emissions.

D. Allowable particulate emissions:

Process weight rate (P) in tons/hr:

$$\frac{10829 \text{ lb}}{\text{hour}} \left| \frac{1 \text{ ton}}{2000 \text{ lbs}} \right| = 5.4145 \frac{\text{tons}}{\text{hour}}$$

From Table I of the Ohio Administrative Code 3745-17-11:

Allowable emissions (E) in lbs/hr:

$$E = 4.10(P)^{0.67} = 4.10(5.4145)^{0.67} = 12.7 \text{ lbs PM/hour}$$

$$\frac{12.7 \text{ lb}}{\text{hour}} \left| \frac{8760 \text{ hrs}}{\text{year}} \right| \frac{1 \text{ ton}}{2000 \text{ lbs}} = 55.6 \frac{\text{tons PM}}{\text{year}}$$

URANIUM AND PARTICULATE EMISSIONS FROM THE
PLANT 8 EAST EIMCO FILTER HOOD EXHAUST

---

1. FILTER HOOD EMISSION SUMMARY

EMISSIONS	PARTICULATE		URANIUM	
	Lbs/hr	Tons/yr	Lbs/hr	Tons/yr
ACTUAL	4.16E-03	1.25E-03	8.32E-05	2.49E-04
POTENTIAL	4.16E-05	1.82E-02	8.32E-05	3.64E-04
UNCONTROLLED POTENTIAL	4.16E-05	1.82E-02	8.32E-05	3.64E-04
ALLOWABLE	12.7	55.6	8.32E-05	3.64E-04

2. ASSUMPTIONS and TEST DATA

A. The air in the vicinity of the filters is assumed to have a maximum alpha activity of $1.0E^{-11}$ microcuries/cm^3 and is indicative of the air being exhausted through the filter hood. This activity is based on air sample results obtained in the area of vacuum filter operations of a similar nature. This activity is considered to be representative of the emissions that would occur at both average and maximum process feed rates.

B. All of the alpha activity is attributed to natural uranium with a specific activity coefficient of 0.676 microcuries/gram.

C. Particulate emissions (resulting from entrainment in water droplets) are back-calculated from uranium emissions data assuming the percentage of uranium in a particulate form is 2%. This assumption is based on upon Plant 8 Rotary Kiln and Primary Calciner observations and the uranium content of the feed material.

D. Flow through the hood is 1500 ACFM; Diameter is 16 inches.

3. URANIUM CONCENTRATION IN VENT EXHAUST:

$$\frac{1.0E\text{-}11 \text{ microcuries}}{cm^3} \left| \frac{\text{gram}}{0.676 \text{ microcuries}} \right| = 1.48E\text{-}11 \frac{\text{grams}}{cm^3}$$

$$\frac{1.48E\text{-}11 \text{ g}}{cm^3} \left| \frac{10^6 \ cm^3}{m^3} \right| \frac{m^3}{35.314 \ ft^3} \left| \frac{\text{Kg}}{1000 \text{ g}} \right| \frac{2.205 \text{ lb}}{\text{Kg}} \right| = 9.24E\text{-}10 \frac{\text{lbs U}}{ft^3}$$

4. URANIUM EMISSIONS

A. Actual uranium emissions:

$$\frac{1500 \ ft^3}{\text{min}} \left| \frac{60 \text{ min}}{\text{hour}} \right| \frac{9.24E\text{-}10 \text{ lbs U}}{ft^3} \right| = 8.32E\text{-}05 \frac{\text{lbs U}}{\text{hour}}$$

$$\frac{8.32E\text{-}05 \text{ lbs U}}{\text{hour}} \left| \frac{6000 \text{ hours}}{\text{year}} \right| \frac{\text{ton}}{2000 \text{ lb}} \right| = 2.49E\text{-}04 \frac{\text{tons U}}{\text{year}}$$

B. Potential uranium emissions:

$$\frac{8.32E\text{-}05 \text{ lbs U}}{\text{hour}} \left| \frac{8760 \text{ hours}}{\text{year}} \right| \frac{\text{ton}}{2000 \text{ lb}} \Bigg| = 3.64E\text{-}04 \frac{\text{tons U}}{\text{year}}$$

C. Uncontrolled potential emissions:

Since no control equipment is used on the the vacuum pumps or filter hood exhausts, the uncontrolled potential emissions will equal the potential emissions.

D. Allowable emissions:

The allowable uranium emissions are equal to the potential uranium emissions.

5. PARTICULATE (PM) EMISSIONS

A. Actual particulate emissions:

$$\frac{8.32E\text{-}05 \text{ lbs U}}{\text{hour}} \left| \frac{100}{2} \right| = 4.16E\text{-}03 \frac{\text{lbs PM}}{\text{hour}}$$

$$\frac{4.16E\text{-}03 \text{ lbs PM}}{\text{hour}} \left| \frac{6000 \text{ hours}}{\text{year}} \right| \frac{\text{ton}}{2000 \text{ lb}} \Bigg| = 1.25E\text{-}03 \frac{\text{tons PM}}{\text{year}}$$

B. Potential particulate emissions:

$$\frac{4.16E\text{-}05 \text{ lbs PM}}{\text{hour}} \left| \frac{8760 \text{ hrs}}{\text{year}} \right| \frac{\text{ton}}{2000 \text{ lb}} \Bigg| = 1.82E\text{-}02 \frac{\text{tons PM}}{\text{year}}$$

C. Uncontrolled potential emissions:

Since no control equipment is used on the the vacuum pumps or filter hood exhausts, the uncontrolled potential emissions will equal the potential emissions.

D. Allowable emissions:

Process weight rate (P) in tons/hr:

$$\frac{10829 \text{ lbs}}{\text{hour}} \left| \frac{\text{ton}}{2000 \text{ lbs}} \right| = 5.4145 \frac{\text{tons}}{\text{hour}}$$

From Table I of the Ohio Administrative Code 3745-17-11:

Allowable emissions (E) in lbs/hr:

$$E = 4.10(P)^{0.67}$$
$$E = 4.10(5.4145)^{0.67}$$

$$E = 12.7 \text{ lbs/hour}$$

$$\frac{12.7 \text{ lb}}{\text{Hr}} \left| \frac{8760 \text{ hr}}{\text{yr}} \right| \frac{\text{tons}}{2000 \text{ lb}} \Bigg| = 55.6 \frac{\text{tons PM}}{\text{year}}$$

C A P 8 8 - P C

Version 1.00

Clean Air Act Assessment Package - 1988

S Y N O P S I S R E P O R T

Non-Radon Individual Assessment
Aug 17, 1995 2:09 pm

Facility: FERNALD ENVIRONMENTAL MANAGEMENT PROJECT
Address: P.O. BOX 538704
7400 WILLEY ROAD
City: CINCINNATI
State: OH Zip: 45253-8704

Effective Dose Equivalent (mrem/year)
2.17E-02

At This Location: 969 Meters North Northeast

Source Category: REMEDIATION SITE
Source Type: Stack
Emission Year: 1994

Comments: Plant 8 East Eimco Hood & vacuum pump exhaust
1 = Vacuum Pump vent, 2 = Hood exhaust

Dataset Name: PLANT8-PTO
Dataset Date: Aug 17, 1995 2:08 pm
Wind File: WNDFILES\FEMPSTD.WND

MAXIMALLY EXPOSED INDIVIDUAL

Location Of The Individual: 969 Meters North Northeast
Lifetime Fatal Cancer Risk: 2.82E-07

ORGAN DOSE EQUIVALENT SUMMARY

Organ	Dose Equivalent (mrem/y)
GONADS	7.04E-05
BREAST	8.03E-05
R MAR	1.72E-03
LUNGS	1.68E-01
THYROID	6.86E-05
ENDOST	2.39E-02
RMNDR	1.89E-03
EFFEC	2.17E-02

RADIONUCLIDE EMISSIONS DURING THE YEAR 1994

Nuclide	Class	Size	Source #1 Ci/y	Source #2 Ci/y	TOTAL Ci/y
RA-226	W	1.00	2.6E-07	4.8E-08	3.1E-07
RA-228	W	1.00	1.0E-06	1.9E-07	1.2E-06
TH-228	Y	1.00	1.1E-05	2.0E-06	1.3E-05
TH-230	Y	1.00	7.7E-07	1.4E-07	9.1E-07
TH-232	Y	1.00	1.7E-06	3.2E-07	2.0E-06
U-234	Y	1.00	2.9E-04	5.4E-05	3.4E-04
U-235	Y	1.00	1.5E-05	2.9E-06	1.8E-05
U-236	Y	1.00	1.5E-05	2.0E-06	1.7E-05
U-238	Y	1.00	3.8E-04	7.1E-05	4.5E-04
AC-228	Y	1.00	1.0E-06	1.9E-07	1.2E-06
RA-224	W	1.00	1.1E-05	2.0E-06	1.3E-05
TH-231	Y	1.00	7.3E-08	1.4E-08	8.7E-08
TH-234	Y	1.00	3.8E-04	7.1E-05	4.5E-04

SITE INFORMATION

Temperature:	12 degrees C
Precipitation:	98 cm/y
Mixing Height:	950 m

SOURCE INFORMATION

Source Number:	1	2
Stack Height (m):	13.72	13.72
Diameter (m):	0.20	0.41
Plume Rise Momentum (m/s): (Exit Velocity)	1.31E+01	5.46E+00

AGRICULTURAL DATA

	Vegetable	Milk	Meat
Fraction Home Produced:	0.700	0.399	0.442
Fraction From Assessment Area:	0.300	0.601	0.558
Fraction Imported:	0.000	0.000	0.000

Food Arrays were not generated for this run.
Default Values used.

DISTANCES USED FOR MAXIMUM INDIVIDUAL ASSESSMENT

1252	1207	1926	1561	1265	969	1070	1137	1171	1312
1308	1318	1238	1236	1850	1382	1190	1186	1731	1695

C A P 8 8 - P C

Version 1.00

Clean Air Act Assessment Package - 1988

D O S E A N D R I S K E Q U I V A L E N T S U M M A R I E S

Non-Radon Individual Assessment
Aug 17, 1995 2:09 pm

Facility: FERNALD ENVIRONMENTAL MANAGEMENT PROJECT
Address: P.O. BOX 538704
7400 WILLEY ROAD
City: CINCINNATI
State: OH Zip: 45253-8704

Source Category: REMEDIATION SITE
Source Type: Stack
Emission Year: 1994

Comments: Plant 8 East Eimco Hood & vacuum pump exhaust
1 = Vacuum Pump vent, 2 = Hood exhaust

Dataset Name: PLANT8-PTO
Dataset Date: Aug 17, 1995 2:08 pm
Wind File: WNDFILES\FEMPSTD.WND

ORGAN DOSE EQUIVALENT SUMMARY

Organ	Selected Individual (mrem/y)
GONADS	7.04E-05
BREAST	8.03E-05
R MAR	1.72E-03
LUNGS	1.68E-01
THYROID	6.86E-05
ENDOST	2.39E-02
RMNDR	1.89E-03
EFFEC	2.17E-02

PATHWAY EFFECTIVE DOSE EQUIVALENT SUMMARY

Pathway	Selected Individual (mrem/y)
INGESTION	1.37E-03
INHALATION	2.03E-02
AIR IMMERSION	8.91E-10
GROUND SURFACE	1.37E-05
INTERNAL	2.17E-02
EXTERNAL	1.37E-05
TOTAL	2.17E-02

NUCLIDE EFFECTIVE DOSE EQUIVALENT SUMMARY

Nuclide	Selected Individual (mrem/y)
RA-226	1.16E-06
RA-228	1.88E-06
TH-228	6.30E-04
TH-230	4.41E-05
TH-232	1.42E-04
U-234	9.16E-03
U-235	4.67E-04
U-236	4.31E-04
U-238	1.08E-02
AC-228	2.04E-08
RA-224	8.86E-06
TH-231	1.68E-11
TH-234	7.43E-06
TOTAL	2.17E-02

CANCER RISK SUMMARY

Cancer	Selected Individual Total Lifetime Fatal Cancer Risk
LEUKEMIA	1.93E-09
BONE	1.27E-09
THYROID	1.58E-11
BREAST	1.79E-10
LUNG	2.74E-07
STOMACH	1.09E-10
BOWEL	1.97E-10
LIVER	1.12E-10
PANCREAS	6.95E-11
URINARY	4.05E-09
OTHER	8.50E-11
TOTAL	2.82E-07

PATHWAY RISK SUMMARY

Pathway	Selected Individual Total Lifetime Fatal Cancer Risk
INGESTION	7.26E-09
INHALATION	2.75E-07
AIR IMMERSION	2.04E-14
GROUND SURFACE	3.15E-10
INTERNAL	2.82E-07
EXTERNAL	3.15E-10
TOTAL	2.82E-07

NUCLIDE RISK SUMMARY

Nuclide	Selected Individual Total Lifetime Fatal Cancer Risk
RA-226	1.49E-11
RA-228	1.89E-11
TH-228	1.26E-08
TH-230	3.61E-10
TH-232	7.97E-10
U-234	1.17E-07
U-235	6.11E-09
U-236	5.52E-09
U-238	1.39E-07
AC-228	4.11E-13
RA-224	1.99E-10
TH-231	4.91E-16
TH-234	2.28E-10
TOTAL	2.82E-07

INDIVIDUAL EFFECTIVE DOSE EQUIVALENT RATE (mrem/y)
(All Radionuclides and Pathways)

Direction	Distance (m) 1252	1207	1926	1561	1265	969	1070
N	8.2E-03	8.6E-03	4.3E-03	5.9E-03	8.0E-03	1.2E-02	1.0E-02
NNW	3.5E-03	3.7E-03	1.9E-03	2.6E-03	3.5E-03	5.0E-03	4.4E-03
NW	2.8E-03	2.9E-03	1.6E-03	2.1E-03	2.8E-03	4.0E-03	3.5E-03
WNW	2.5E-03	2.6E-03	1.4E-03	1.8E-03	2.4E-03	3.5E-03	3.1E-03
W	3.3E-03	3.4E-03	1.8E-03	2.4E-03	3.2E-03	4.6E-03	4.0E-03
WSW	9.9E-03	1.0E-02	5.2E-03	7.1E-03	9.8E-03	1.4E-02	1.3E-02
SW	6.1E-03	6.5E-03	3.3E-03	4.4E-03	6.0E-03	8.9E-03	7.7E-03
SSW	9.2E-03	9.7E-03	4.7E-03	6.5E-03	9.0E-03	1.4E-02	1.2E-02
S	8.1E-03	8.5E-03	4.2E-03	5.8E-03	8.0E-03	1.2E-02	1.0E-02
SSE	8.0E-03	8.5E-03	4.1E-03	5.7E-03	7.9E-03	1.2E-02	1.0E-02
SE	6.0E-03	6.3E-03	3.3E-03	4.4E-03	5.9E-03	8.6E-03	7.5E-03
ESE	9.8E-03	1.0E-02	5.1E-03	7.0E-03	9.6E-03	1.4E-02	1.2E-02
E	6.8E-03	7.2E-03	3.6E-03	4.9E-03	6.7E-03	1.0E-02	8.6E-03
ENE	7.9E-03	8.3E-03	4.1E-03	5.6E-03	7.7E-03	1.2E-02	9.9E-03
NE	8.7E-03	9.2E-03	4.5E-03	6.2E-03	8.6E-03	1.3E-02	1.1E-02
NNE	1.5E-02	1.6E-02	7.9E-03	1.1E-02	1.5E-02	2.2E-02	1.9E-02

Direction	Distance (m) 1137	1171	1312	1308	1318	1238	1236
N	9.5E-03	9.0E-03	7.6E-03	7.6E-03	7.6E-03	8.3E-03	8.3E-03
NNW	4.0E-03	3.9E-03	3.3E-03	3.3E-03	3.3E-03	3.6E-03	3.6E-03
NW	3.2E-03	3.1E-03	2.6E-03	2.6E-03	2.6E-03	2.8E-03	2.9E-03
WNW	2.8E-03	2.7E-03	2.3E-03	2.3E-03	2.3E-03	2.5E-03	2.5E-03
W	3.7E-03	3.6E-03	3.0E-03	3.1E-03	3.0E-03	3.3E-03	3.3E-03
WSW	1.1E-02	1.1E-02	9.3E-03	9.3E-03	9.2E-03	1.0E-02	1.0E-02
SW	7.1E-03	6.8E-03	5.7E-03	5.7E-03	5.7E-03	6.2E-03	6.2E-03
SSW	1.1E-02	1.0E-02	8.5E-03	8.6E-03	8.5E-03	9.3E-03	9.4E-03
S	9.3E-03	8.9E-03	7.5E-03	7.6E-03	7.5E-03	8.2E-03	8.2E-03
SSE	9.3E-03	8.9E-03	7.5E-03	7.5E-03	7.4E-03	8.2E-03	8.2E-03
SE	6.9E-03	6.6E-03	5.6E-03	5.7E-03	5.6E-03	6.1E-03	6.1E-03
ESE	1.1E-02	1.1E-02	9.1E-03	9.2E-03	9.1E-03	1.0E-02	1.0E-02
E	7.8E-03	7.5E-03	6.3E-03	6.3E-03	6.3E-03	6.9E-03	6.9E-03
ENE	9.1E-03	8.7E-03	7.3E-03	7.4E-03	7.3E-03	8.0E-03	8.0E-03
NE	1.0E-02	9.6E-03	8.1E-03	8.1E-03	8.0E-03	8.8E-03	8.9E-03
NNE	1.7E-02	1.6E-02	1.4E-02	1.4E-02	1.4E-02	1.5E-02	1.5E-02

INDIVIDUAL EFFECTIVE DOSE EQUIVALENT RATE (mrem/y)
(All Radionuclides and Pathways)

	Distance (m)					
Direction	1850	1382	1190	1186	1731	1695
N	4.5E-03	7.0E-03	8.8E-03	8.9E-03	5.0E-03	5.2E-03
NNW	2.0E-03	3.1E-03	3.8E-03	3.8E-03	2.2E-03	2.3E-03
NW	1.6E-03	2.4E-03	3.0E-03	3.0E-03	1.8E-03	1.8E-03
WNW	1.5E-03	2.2E-03	2.7E-03	2.7E-03	1.6E-03	1.6E-03
W	1.9E-03	2.8E-03	3.5E-03	3.5E-03	2.1E-03	2.2E-03
WSW	5.5E-03	8.6E-03	1.1E-02	1.1E-02	6.1E-03	6.3E-03
SW	3.5E-03	5.3E-03	6.6E-03	6.6E-03	3.8E-03	3.9E-03
SSW	5.0E-03	7.9E-03	9.9E-03	1.0E-02	5.6E-03	5.8E-03
S	4.5E-03	7.0E-03	8.7E-03	8.8E-03	5.0E-03	5.1E-03
SSE	4.4E-03	6.9E-03	8.7E-03	8.7E-03	4.9E-03	5.0E-03
SE	3.5E-03	5.2E-03	6.5E-03	6.5E-03	3.8E-03	3.9E-03
ESE	5.4E-03	8.4E-03	1.1E-02	1.1E-02	6.0E-03	6.2E-03
E	3.8E-03	5.8E-03	7.3E-03	7.4E-03	4.2E-03	4.3E-03
ENE	4.4E-03	6.8E-03	8.5E-03	8.5E-03	4.8E-03	5.0E-03
NE	4.8E-03	7.5E-03	9.4E-03	9.4E-03	5.3E-03	5.5E-03
NNE	8.4E-03	1.3E-02	1.6E-02	1.6E-02	9.3E-03	9.5E-03

INDIVIDUAL LIFETIME RISK (deaths)
(All Radionuclides and Pathways)

Direction	Distance (m) 1252	1207	1926	1561	1265	969	1070
N	1.1E-07	1.1E-07	5.4E-08	7.5E-08	1.0E-07	1.6E-07	1.3E-07
NNW	4.4E-08	4.7E-08	2.4E-08	3.2E-08	4.4E-08	6.4E-08	5.6E-08
NW	3.5E-08	3.7E-08	1.9E-08	2.6E-08	3.5E-08	5.1E-08	4.4E-08
WNW	3.1E-08	3.3E-08	1.7E-08	2.3E-08	3.1E-08	4.5E-08	3.9E-08
W	4.1E-08	4.3E-08	2.2E-08	3.0E-08	4.0E-08	5.9E-08	5.1E-08
WSW	1.3E-07	1.4E-07	6.7E-08	9.2E-08	1.3E-07	1.9E-07	1.6E-07
SW	7.9E-08	8.3E-08	4.1E-08	5.7E-08	7.7E-08	1.2E-07	9.9E-08
SSW	1.2E-07	1.3E-07	6.0E-08	8.4E-08	1.2E-07	1.8E-07	1.5E-07
S	1.0E-07	1.1E-07	5.4E-08	7.4E-08	1.0E-07	1.5E-07	1.3E-07
SSE	1.0E-07	1.1E-07	5.2E-08	7.3E-08	1.0E-07	1.5E-07	1.3E-07
SE	7.7E-08	8.1E-08	4.2E-08	5.6E-08	7.6E-08	1.1E-07	9.7E-08
ESE	1.3E-07	1.3E-07	6.5E-08	9.0E-08	1.2E-07	1.9E-07	1.6E-07
E	8.7E-08	9.2E-08	4.5E-08	6.2E-08	8.6E-08	1.3E-07	1.1E-07
ENE	1.0E-07	1.1E-07	5.2E-08	7.2E-08	1.0E-07	1.5E-07	1.3E-07
NE	1.1E-07	1.2E-07	5.8E-08	8.0E-08	1.1E-07	1.7E-07	1.4E-07
NNE	1.9E-07	2.0E-07	1.0E-07	1.4E-07	1.9E-07	2.8E-07	2.4E-07

Direction	Distance (m) 1137	1171	1312	1308	1318	1238	1236
N	1.2E-07	1.2E-07	9.8E-08	9.9E-08	9.7E-08	1.1E-07	1.1E-07
NNW	5.1E-08	4.9E-08	4.2E-08	4.2E-08	4.1E-08	4.5E-08	4.5E-08
NW	4.1E-08	3.9E-08	3.3E-08	3.3E-08	3.3E-08	3.6E-08	3.6E-08
WNW	3.6E-08	3.4E-08	2.9E-08	2.9E-08	2.9E-08	3.1E-08	3.2E-08
W	4.7E-08	4.5E-08	3.8E-08	3.9E-08	3.8E-08	4.2E-08	4.2E-08
WSW	1.5E-07	1.4E-07	1.2E-07	1.2E-07	1.2E-07	1.3E-07	1.3E-07
SW	9.1E-08	8.7E-08	7.3E-08	7.4E-08	7.3E-08	8.0E-08	8.0E-08
SSW	1.4E-07	1.3E-07	1.1E-07	1.1E-07	1.1E-07	1.2E-07	1.2E-07
S	1.2E-07	1.2E-07	9.7E-08	9.7E-08	9.6E-08	1.1E-07	1.1E-07
SSE	1.2E-07	1.1E-07	9.6E-08	9.6E-08	9.5E-08	1.1E-07	1.1E-07
SE	8.9E-08	8.5E-08	7.2E-08	7.2E-08	7.2E-08	7.8E-08	7.9E-08
ESE	1.5E-07	1.4E-07	1.2E-07	1.2E-07	1.2E-07	1.3E-07	1.3E-07
E	1.0E-07	9.6E-08	8.1E-08	8.1E-08	8.0E-08	8.8E-08	8.9E-08
ENE	1.2E-07	1.1E-07	9.4E-08	9.5E-08	9.3E-08	1.0E-07	1.0E-07
NE	1.3E-07	1.2E-07	1.0E-07	1.0E-07	1.0E-07	1.1E-07	1.1E-07
NNE	2.2E-07	2.1E-07	1.8E-07	1.8E-07	1.8E-07	2.0E-07	2.0E-07

INDIVIDUAL LIFETIME RISK (deaths)
(All Radionuclides and Pathways)

	Distance (m)					
Direction	1850	1382	1190	1186	1731	1695
N	5.8E-08	9.1E-08	1.1E-07	1.1E-07	6.4E-08	6.6E-08
NNW	2.5E-08	3.9E-08	4.8E-08	4.8E-08	2.8E-08	2.9E-08
NW	2.0E-08	3.0E-08	3.8E-08	3.8E-08	2.2E-08	2.3E-08
WNW	1.8E-08	2.7E-08	3.3E-08	3.3E-08	1.9E-08	2.0E-08
W	2.4E-08	3.6E-08	4.4E-08	4.4E-08	2.6E-08	2.7E-08
WSW	7.1E-08	1.1E-07	1.4E-07	1.4E-07	7.8E-08	8.1E-08
SW	4.4E-08	6.8E-08	8.5E-08	8.5E-08	4.8E-08	5.0E-08
SSW	6.4E-08	1.0E-07	1.3E-07	1.3E-07	7.1E-08	7.4E-08
S	5.7E-08	9.0E-08	1.1E-07	1.1E-07	6.3E-08	6.6E-08
SSE	5.6E-08	8.8E-08	1.1E-07	1.1E-07	6.2E-08	6.4E-08
SE	4.4E-08	6.7E-08	8.3E-08	8.3E-08	4.9E-08	5.0E-08
ESE	6.9E-08	1.1E-07	1.4E-07	1.4E-07	7.7E-08	7.9E-08
E	4.8E-08	7.5E-08	9.4E-08	9.5E-08	5.3E-08	5.5E-08
ENE	5.6E-08	8.7E-08	1.1E-07	1.1E-07	6.2E-08	6.4E-08
NE	6.1E-08	9.6E-08	1.2E-07	1.2E-07	6.8E-08	7.0E-08
NNE	1.1E-07	1.7E-07	2.1E-07	2.1E-07	1.2E-07	1.2E-07

C A P 8 8 - P C

Version 1.00

Clean Air Act Assessment Package - 1988

S Y N O P S I S R E P O R T

Non-Radon Individual Assessment
Aug 17, 1995 2:10 pm

Facility: FERNALD ENVIRONMENTAL MANAGEMENT PROJECT
Address: P.O. BOX 538704
7400 WILLEY ROAD
City: CINCINNATI
State: OH Zip: 45253-8704

Effective Dose Equivalent (mrem/year)
1.46E-02

At This Location: 1265 Meters North Northeast

Source Category: REMEDIATION SITE
Source Type: Stack
Emission Year: 1994

Comments: Plant 8 East Eimco Hood & vacuum pump exhaust
1 = Vacuum Pump vent, 2 = Hood exhaust

Dataset Name: PLANT8-PTO-2
Dataset Date: Aug 17, 1995 2:08 pm
Wind File: WNDFILES\FEMPSTD.WND

MAXIMALLY EXPOSED INDIVIDUAL

Location Of The Individual: 1265 Meters North Northeast
Lifetime Fatal Cancer Risk: 1.90E-07

ORGAN DOSE EQUIVALENT SUMMARY

Organ	Dose Equivalent (mrem/y)
GONADS	4.81E-05
BREAST	5.50E-05
R MAR	1.17E-03
LUNGS	1.13E-01
THYROID	4.69E-05
ENDOST	1.63E-02
RMNDR	1.29E-03
EFFEC	1.46E-02

RADIONUCLIDE EMISSIONS DURING THE YEAR 1994

Nuclide	Class	Size	Source #1 Ci/y	Source #2 Ci/y	TOTAL Ci/y
RA-226	W	1.00	2.6E-07	4.8E-08	3.1E-07
RA-228	W	1.00	1.0E-06	1.9E-07	1.2E-06
TH-228	Y	1.00	1.1E-05	2.0E-06	1.3E-05
TH-230	Y	1.00	7.7E-07	1.4E-07	9.1E-07
TH-232	Y	1.00	1.7E-06	3.2E-07	2.0E-06
U-234	Y	1.00	2.9E-04	5.4E-05	3.4E-04
U-235	Y	1.00	1.5E-05	2.9E-06	1.8E-05
U-236	Y	1.00	1.5E-05	2.0E-06	1.7E-05
U-238	Y	1.00	3.8E-04	7.1E-05	4.5E-04
AC-228	Y	1.00	1.0E-06	1.9E-07	1.2E-06
RA-224	W	1.00	1.1E-05	2.0E-06	1.3E-05
TH-231	Y	1.00	7.3E-08	1.4E-08	8.7E-08
TH-234	Y	1.00	3.8E-04	7.1E-05	4.5E-04

SITE INFORMATION

Temperature:	12 degrees C
Precipitation:	98 cm/y
Mixing Height:	950 m

SOURCE INFORMATION

Source Number:	1	2
Stack Height (m):	13.72	13.72
Diameter (m):	0.20	0.41
Plume Rise Momentum (m/s): (Exit Velocity)	1.31E+01	5.46E+00

AGRICULTURAL DATA

	Vegetable	Milk	Meat
Fraction Home Produced:	0.700	0.399	0.442
Fraction From Assessment Area:	0.300	0.601	0.558
Fraction Imported:	0.000	0.000	0.000

Food Arrays were not generated for this run.
Default Values used.

DISTANCES USED FOR MAXIMUM INDIVIDUAL ASSESSMENT

1265	1537	2001	1897	2573	2273	2298	1631	1468	2305
2372	1699	2333	1596	1913	2005	1958	1839	1870	1809

CAP88-PC

Version 1.00

Clean Air Act Assessment Package - 1988

DOSE AND RISK EQUIVALENT SUMMARIES

Non-Radon Individual Assessment
Aug 17, 1995 2:10 pm

Facility: FERNALD ENVIRONMENTAL MANAGEMENT PROJECT
Address: P.O. BOX 538704
7400 WILLEY ROAD
City: CINCINNATI
State: OH Zip: 45253-8704

Source Category: REMEDIATION SITE
Source Type: Stack
Emission Year: 1994

Comments: Plant 8 East Eimco Hood & vacuum pump exhaust
1 = Vacuum Pump vent, 2 = Hood exhaust

Dataset Name: PLANT8-PTO-2
Dataset Date: Aug 17, 1995 2:08 pm
Wind File: WNDFILES\FEMPSTD.WND

ORGAN DOSE EQUIVALENT SUMMARY

Organ	Selected Individual (mrem/y)
GONADS	4.81E-05
BREAST	5.50E-05
R MAR	1.17E-03
LUNGS	1.13E-01
THYROID	4.69E-05
ENDOST	1.63E-02
RMNDR	1.29E-03
EFFEC	1.46E-02

PATHWAY EFFECTIVE DOSE EQUIVALENT SUMMARY

Pathway	Selected Individual (mrem/y)
INGESTION	9.32E-04
INHALATION	1.36E-02
AIR IMMERSION	5.99E-10
GROUND SURFACE	9.50E-06
INTERNAL	1.46E-02
EXTERNAL	9.50E-06
TOTAL	1.46E-02

NUCLIDE EFFECTIVE DOSE EQUIVALENT SUMMARY

Nuclide	Selected Individual (mrem/y)
RA-226	7.85E-07
RA-228	1.28E-06
TH-228	4.23E-04
TH-230	2.97E-05
TH-232	9.51E-05
U-234	6.16E-03
U-235	3.14E-04
U-236	2.90E-04
U-238	7.25E-03
AC-228	1.37E-08
RA-224	5.95E-06
TH-231	1.13E-11
TH-234	5.04E-06
TOTAL	1.46E-02

CANCER RISK SUMMARY

Cancer	Selected Individual Total Lifetime Fatal Cancer Risk
LEUKEMIA	1.32E-09
BONE	8.65E-10
THYROID	1.08E-11
BREAST	1.23E-10
LUNG	1.84E-07
STOMACH	7.48E-11
BOWEL	1.34E-10
LIVER	7.68E-11
PANCREAS	4.76E-11
URINARY	2.76E-09
OTHER	5.82E-11
TOTAL	1.90E-07

PATHWAY RISK SUMMARY

Pathway	Selected Individual Total Lifetime Fatal Cancer Risk
INGESTION	4.95E-09
INHALATION	1.85E-07
AIR IMMERSION	1.37E-14
GROUND SURFACE	2.18E-10
INTERNAL	1.90E-07
EXTERNAL	2.18E-10
TOTAL	1.90E-07

NUCLIDE RISK SUMMARY

Nuclide	Selected Individual Total Lifetime Fatal Cancer Risk
RA-226	1.01E-11
RA-228	1.28E-11
TH-228	8.48E-09
TH-230	2.43E-10
TH-232	5.36E-10
U-234	7.88E-08
U-235	4.12E-09
U-236	3.71E-09
U-238	9.36E-08
AC-228	2.76E-13
RA-224	1.33E-10
TH-231	3.30E-16
TH-234	1.54E-10
TOTAL	1.90E-07

INDIVIDUAL EFFECTIVE DOSE EQUIVALENT RATE (mrem/y)
(All Radionuclides and Pathways)

	Distance (m)						
Direction	1265	1537	2001	1897	2573	2273	2298
N	8.0E-03	5.9E-03	4.0E-03	4.3E-03	2.7E-03	3.3E-03	3.2E-03
NNW	3.4E-03	2.6E-03	1.7E-03	1.9E-03	1.2E-03	1.5E-03	1.4E-03
NW	2.7E-03	2.0E-03	1.4E-03	1.5E-03	1.0E-03	1.2E-03	1.2E-03
WNW	2.4E-03	1.8E-03	1.2E-03	1.3E-03	8.9E-04	1.0E-03	1.0E-03
W	3.1E-03	2.4E-03	1.7E-03	1.8E-03	1.2E-03	1.4E-03	1.4E-03
WSW	9.7E-03	7.2E-03	4.8E-03	5.3E-03	3.3E-03	4.0E-03	3.9E-03
SW	6.0E-03	4.5E-03	3.0E-03	3.3E-03	2.1E-03	2.5E-03	2.5E-03
SSW	9.0E-03	6.6E-03	4.4E-03	4.8E-03	3.0E-03	3.6E-03	3.5E-03
S	7.9E-03	5.9E-03	3.9E-03	4.3E-03	2.7E-03	3.2E-03	3.2E-03
SSE	7.8E-03	5.8E-03	3.8E-03	4.1E-03	2.6E-03	3.1E-03	3.1E-03
SE	5.9E-03	4.4E-03	3.1E-03	3.3E-03	2.2E-03	2.6E-03	2.6E-03
ESE	9.6E-03	7.1E-03	4.8E-03	5.2E-03	3.3E-03	3.9E-03	3.9E-03
E	6.6E-03	4.9E-03	3.3E-03	3.6E-03	2.3E-03	2.7E-03	2.7E-03
ENE	7.7E-03	5.7E-03	3.8E-03	4.1E-03	2.6E-03	3.1E-03	3.1E-03
NE	8.5E-03	6.3E-03	4.2E-03	4.6E-03	2.9E-03	3.5E-03	3.4E-03
NNE	1.5E-02	1.1E-02	7.4E-03	8.0E-03	5.1E-03	6.1E-03	6.0E-03

	Distance (m)						
Direction	1631	1468	2305	2372	1699	2333	1596
N	5.4E-03	6.3E-03	3.2E-03	3.1E-03	5.1E-03	3.1E-03	5.6E-03
NNW	2.3E-03	2.7E-03	1.4E-03	1.4E-03	2.2E-03	1.4E-03	2.4E-03
NW	1.9E-03	2.2E-03	1.2E-03	1.1E-03	1.8E-03	1.1E-03	1.9E-03
WNW	1.7E-03	1.9E-03	1.0E-03	9.9E-04	1.6E-03	1.0E-03	1.7E-03
W	2.2E-03	2.5E-03	1.4E-03	1.3E-03	2.1E-03	1.4E-03	2.3E-03
WSW	6.6E-03	7.8E-03	3.9E-03	3.7E-03	6.2E-03	3.8E-03	6.8E-03
SW	4.1E-03	4.8E-03	2.5E-03	2.4E-03	3.9E-03	2.4E-03	4.2E-03
SSW	6.1E-03	7.1E-03	3.5E-03	3.4E-03	5.7E-03	3.5E-03	6.3E-03
S	5.4E-03	6.3E-03	3.2E-03	3.0E-03	5.0E-03	3.1E-03	5.5E-03
SSE	5.3E-03	6.2E-03	3.1E-03	2.9E-03	4.9E-03	3.0E-03	5.4E-03
SE	4.1E-03	4.7E-03	2.5E-03	2.4E-03	3.9E-03	2.5E-03	4.2E-03
ESE	6.5E-03	7.6E-03	3.9E-03	3.7E-03	6.1E-03	3.8E-03	6.7E-03
E	4.5E-03	5.3E-03	2.7E-03	2.6E-03	4.2E-03	2.6E-03	4.6E-03
ENE	5.2E-03	6.1E-03	3.1E-03	2.9E-03	4.9E-03	3.0E-03	5.4E-03
NE	5.8E-03	6.8E-03	3.4E-03	3.2E-03	5.4E-03	3.3E-03	6.0E-03
NNE	1.0E-02	1.2E-02	6.0E-03	5.8E-03	9.4E-03	5.9E-03	1.0E-02

INDIVIDUAL EFFECTIVE DOSE EQUIVALENT RATE (mrem/y)
(All Radionuclides and Pathways)

	Distance (m)					
Direction	1913	2005	1958	1839	1870	1809
N	4.2E-03	3.9E-03	4.1E-03	4.5E-03	4.4E-03	4.6E-03
NNW	1.9E-03	1.7E-03	1.8E-03	2.0E-03	1.9E-03	2.0E-03
NW	1.5E-03	1.4E-03	1.4E-03	1.6E-03	1.5E-03	1.6E-03
WNW	1.3E-03	1.2E-03	1.3E-03	1.4E-03	1.4E-03	1.4E-03
W	1.8E-03	1.7E-03	1.7E-03	1.9E-03	1.8E-03	1.9E-03
WSW	5.2E-03	4.8E-03	5.0E-03	5.5E-03	5.4E-03	5.7E-03
SW	3.2E-03	3.0E-03	3.1E-03	3.4E-03	3.4E-03	3.5E-03
SSW	4.7E-03	4.4E-03	4.6E-03	5.0E-03	4.9E-03	5.2E-03
S	4.2E-03	3.9E-03	4.1E-03	4.5E-03	4.4E-03	4.6E-03
SSE	4.1E-03	3.8E-03	3.9E-03	4.3E-03	4.2E-03	4.5E-03
SE	3.3E-03	3.1E-03	3.2E-03	3.5E-03	3.4E-03	3.5E-03
ESE	5.1E-03	4.7E-03	4.9E-03	5.4E-03	5.3E-03	5.5E-03
E	3.5E-03	3.3E-03	3.4E-03	3.7E-03	3.6E-03	3.8E-03
ENE	4.1E-03	3.8E-03	3.9E-03	4.3E-03	4.2E-03	4.4E-03
NE	4.5E-03	4.2E-03	4.4E-03	4.8E-03	4.7E-03	4.9E-03
NNE	7.9E-03	7.4E-03	7.7E-03	8.4E-03	8.2E-03	8.6E-03

INDIVIDUAL LIFETIME RISK (deaths)
(All Radionuclides and Pathways)

	Distance (m)						
Direction	1265	1537	2001	1897	2573	2273	2298
N	1.0E-07	7.6E-08	5.1E-08	5.5E-08	3.4E-08	4.2E-08	4.1E-08
NNW	4.3E-08	3.3E-08	2.2E-08	2.4E-08	1.5E-08	1.8E-08	1.8E-08
NW	3.4E-08	2.6E-08	1.7E-08	1.9E-08	1.2E-08	1.5E-08	1.4E-08
WNW	3.0E-08	2.3E-08	1.5E-08	1.7E-08	1.1E-08	1.3E-08	1.3E-08
W	4.0E-08	3.0E-08	2.1E-08	2.2E-08	1.5E-08	1.7E-08	1.7E-08
WSW	1.3E-07	9.4E-08	6.2E-08	6.8E-08	4.2E-08	5.1E-08	5.0E-08
SW	7.7E-08	5.7E-08	3.9E-08	4.2E-08	2.7E-08	3.2E-08	3.1E-08
SSW	1.2E-07	8.6E-08	5.6E-08	6.1E-08	3.8E-08	4.6E-08	4.5E-08
S	1.0E-07	7.6E-08	5.0E-08	5.5E-08	3.4E-08	4.1E-08	4.1E-08
SSE	1.0E-07	7.4E-08	4.9E-08	5.3E-08	3.3E-08	4.0E-08	3.9E-08
SE	7.6E-08	5.7E-08	3.9E-08	4.2E-08	2.8E-08	3.3E-08	3.2E-08
ESE	1.2E-07	9.2E-08	6.1E-08	6.6E-08	4.2E-08	5.0E-08	4.9E-08
E	8.5E-08	6.3E-08	4.2E-08	4.6E-08	2.9E-08	3.5E-08	3.4E-08
ENE	9.9E-08	7.3E-08	4.9E-08	5.3E-08	3.3E-08	4.0E-08	3.9E-08
NE	1.1E-07	8.1E-08	5.4E-08	5.9E-08	3.6E-08	4.4E-08	4.3E-08
NNE	1.9E-07	1.4E-07	9.6E-08	1.0E-07	6.6E-08	7.9E-08	7.8E-08

	Distance (m)						
Direction	1631	1468	2305	2372	1699	2333	1596
N	7.0E-08	8.2E-08	4.1E-08	3.9E-08	6.5E-08	4.0E-08	7.2E-08
NNW	3.0E-08	3.5E-08	1.8E-08	1.7E-08	2.8E-08	1.7E-08	3.1E-08
NW	2.4E-08	2.8E-08	1.4E-08	1.4E-08	2.2E-08	1.4E-08	2.4E-08
WNW	2.1E-08	2.4E-08	1.3E-08	1.2E-08	2.0E-08	1.2E-08	2.1E-08
W	2.8E-08	3.2E-08	1.7E-08	1.6E-08	2.6E-08	1.7E-08	2.9E-08
WSW	8.5E-08	1.0E-07	5.0E-08	4.8E-08	8.0E-08	4.9E-08	8.8E-08
SW	5.3E-08	6.2E-08	3.1E-08	3.0E-08	4.9E-08	3.1E-08	5.4E-08
SSW	7.8E-08	9.2E-08	4.5E-08	4.3E-08	7.3E-08	4.4E-08	8.1E-08
S	6.9E-08	8.1E-08	4.0E-08	3.9E-08	6.5E-08	4.0E-08	7.1E-08
SSE	6.8E-08	8.0E-08	3.9E-08	3.7E-08	6.3E-08	3.8E-08	7.0E-08
SE	5.2E-08	6.1E-08	3.2E-08	3.1E-08	5.0E-08	3.2E-08	5.4E-08
ESE	8.4E-08	9.8E-08	4.9E-08	4.7E-08	7.9E-08	4.8E-08	8.7E-08
E	5.7E-08	6.8E-08	3.4E-08	3.2E-08	5.4E-08	3.3E-08	5.9E-08
ENE	6.7E-08	7.9E-08	3.9E-08	3.7E-08	6.3E-08	3.8E-08	6.9E-08
NE	7.4E-08	8.7E-08	4.3E-08	4.1E-08	7.0E-08	4.2E-08	7.7E-08
NNE	1.3E-07	1.5E-07	7.8E-08	7.4E-08	1.2E-07	7.6E-08	1.3E-07

INDIVIDUAL LIFETIME RISK (deaths)
(All Radionuclides and Pathways)

	Distance (m)					
Direction	1913	2005	1958	1839	1870	1809
N	5.4E-08	5.1E-08	5.2E-08	5.8E-08	5.6E-08	5.9E-08
NNW	2.3E-08	2.2E-08	2.3E-08	2.5E-08	2.4E-08	2.6E-08
NW	1.9E-08	1.7E-08	1.8E-08	2.0E-08	1.9E-08	2.0E-08
WNW	1.6E-08	1.5E-08	1.6E-08	1.7E-08	1.7E-08	1.8E-08
W	2.2E-08	2.1E-08	2.1E-08	2.3E-08	2.3E-08	2.4E-08
WSW	6.7E-08	6.2E-08	6.5E-08	7.1E-08	6.9E-08	7.3E-08
SW	4.1E-08	3.9E-08	4.0E-08	4.4E-08	4.3E-08	4.5E-08
SSW	6.1E-08	5.6E-08	5.8E-08	6.5E-08	6.3E-08	6.6E-08
S	5.4E-08	5.0E-08	5.2E-08	5.7E-08	5.6E-08	5.9E-08
SSE	5.2E-08	4.9E-08	5.0E-08	5.6E-08	5.4E-08	5.7E-08
SE	4.2E-08	3.9E-08	4.1E-08	4.4E-08	4.3E-08	4.5E-08
ESE	6.5E-08	6.1E-08	6.3E-08	7.0E-08	6.8E-08	7.1E-08
E	4.5E-08	4.2E-08	4.3E-08	4.8E-08	4.7E-08	4.9E-08
ENE	5.2E-08	4.9E-08	5.0E-08	5.6E-08	5.4E-08	5.7E-08
NE	5.8E-08	5.4E-08	5.6E-08	6.2E-08	6.0E-08	6.3E-08
NNE	1.0E-07	9.6E-08	9.9E-08	1.1E-07	1.1E-07	1.1E-07

OHIO ENVIRONMENTAL PROTECTION AGENCY
APPLICATION FOR A PERMIT TO OPERATE
AN AIR CONTAMINANT SOURCE

7201

D.O.E.-Fernald Environmental Management Project
Facility Name

Mr. Stephen M. Beckman
Person to Contact

7400 Willey Road
Facility Address

Post Office Box 538704
Mailing Address

Fernald Hamilton 45030
City County Zip

Cincinnati OH 45253-8704
City State Zip

513/ 648-3000
Telephone Area Number

513/ 648-5264
Telephone

#1431110128- P276
(Application no., if this is a renewal application)

4953
Std. Ind. Class. Code

1. Complete and attach any of the following appendices most appropriate to the air contaminant source. In addition, a compliance time schedule form is to be attached when applicable. Check as appropriate the following:

X Appendix A, Process
___Appendix B, Fuel-Burning Equipment
___Appendix C, Incinerator
___Appendix D, Surface Coating or Printing Operation
___Appendix E, Storage Tank
___Appendix H, Gasoline Dispensing Facility
___Appendix J, Loading Rack at Bulk Gasoline Plant or Terminal
___Appendix K, Surface Coating Line or Printing Line
___Appendix L, Solvent Metal Cleaning
___Appendix M, Fugitive Dust Emission Sources
___Specify Appendix No.
___Appendix N, Rubber Tire Manufacturing
___Appendix O, Dry Cleaning Facility
___Appendix P, Landfills
___Other Appendix ___
___Compliance Time Schedule

2. Description of Source (same as used on appendix): Plant 8 - Neutralization of Sump Liquor - D-101

3. Your identification for Source (same as used on appendix): D-101 (8-016)

I, being the individual specified in Rule 3745-35-02(B) of the Ohio Administrative Code, hereby apply for a Permit to Operate the air contaminant source(s) described herein. As required, the following additional documents are submitted as part of this application (describe all attachments):

Attachments:
Appendix A
Process Flow Diagram
Emission Calculations

Authorized Signature
Terence D. Hagen
Director Environmental Compliance
Title
9/29/95
Date

*Pursuant to OAC Rule 3745-35-02(B) (Permit to Operate). Operation of an air contaminant source without an effective permit to operate is prohibited to 3704.05 Ohio Revised Code.

000104

EPA-3161

For Official Use Only

Premise No. / / /
Source No. /
Application No. /

OEPA NO. 1431110128 P
A
FEMP ID NO. 8-

APPENDIX A, PROCESS

PROCESS DATA

1. Name of process Plant 8 Neutralization of Sump Liquor D-101

2. End product of this process Neutralized Sump Liquor

3. Primary process equipment Lime dumping station; sump tank

Your identification D-101 (8-016) Year Installed 195

4. Manufacturer Custom Make or Model N/A (custom

5. Capacity of equipment (lbs./hr): Rated 300 gal/hr Max. 350 gal/hr

6. Method of exhaust ventilation: [X] Stack [ ] Window fan [ ] Roof vent
[ ] Other, describe
Are there multiple exnausts? [ ] Yes [X] No

OPERATING DATA

7. Normal operating schedule: 24 hrs./day, 5 days/wk., 52 wks./year.

8. Percent annual production (finished units) by season:
Winter 25 Spring 25 Summer 25 Fall 25

9. Hourly production rates (lbs.): Average 300 gal (2400 lbs) Maximum 350 gal (2900 lbs

10. Annual production (indicate units) 1,800,000 gal
Projected percent annual increase in production 0

11. Type of operation: [ ] Continuous [X] Batch

12. If batch, indicate Minutes per cycle 1440 Minutes between cycles var

13. Materials used in process:

List of Raw Materials	Principal Use	Amount (lbs./hr.)
Lime	pH stabilizing agent	varies with pH
		of sump water
Sump Liquor	To be processed	6900 gallons/batch

14. A PROCESS FLOW DIAGRAM MUST BE INCLUDED WITH THIS APPENDIX. Show entry and exi points of all raw materials, intermediate products, by products and finishe products. Label all materials including airborne contaminants and other wast materials. Label the process equipment.

See the attached Process Flow Diagram

OEPA NO. 1431110128 P276
FEMP ID NO. 8-016

CONTROL EQUIPMENT

Control Equipment Code:

(A) Settling Chamber
(B) Cyclone
(C) Multiple Cyclone
(D) Electrostatic Precipitator
(E) Fabric Filter
(F) Spray Chamber
(G) Cyclonic Scrubber
(H) Impingement Scrubber
(I) Orifice Scrubber
(J) Venturi Scrubber
(K) Plate or Tray Tower
(L) Packing Tower
(M) Adsorber
(N) Condenser
(O) Afterburner - Catalytic
(P) Afterburner - Thermal
(Q) Other, Describe_____

15. Control Equipment Data: N/A

Item	Primary Collector	Secondary Collector
(a) Type (See above Code)		
(b) Manufacturer		
(c) Model No.		
(d) Year Installed		
(e) Your Identification		
(f) Pollutant Controlled		
(g) Controlled pollutant emission rate (if known)		
(h) Pressure Drop		
(i) Design efficiency		
(j) Operating efficiency		

STACK DATA

16. Your Stack Identification Open top tank

17. Are other sources vented to this stack? [ ] Yes [X] No
If yes, identify sources_____

18. Type: [X] Round, top inside diameter dimension 24 inches (manway)
[ ] Rectangular, top inside dimensions (L)_____ X (W)_____

19. Height: Above roof N/A ft., above ground N/A ft.

20. Exit gas: Temp. Amb. °F, Volume N/A ACFM, Velocity N/A ft./min.

21. Continuous monitoring equipment: [ ] Yes [X] No
If yes, indicate : Type _____, Manufacturer _____

Make or Model _____, Pollutant(s) monitored _____

22. Emission data: Emissions from this source have been determined and such data is included with this appendix: [X] Yes [ ] No
If yes, check method: [X] Stack Test [X] Emission Factor [ ] Material Balance

Completed by Kip Klee, Date 08/29/95

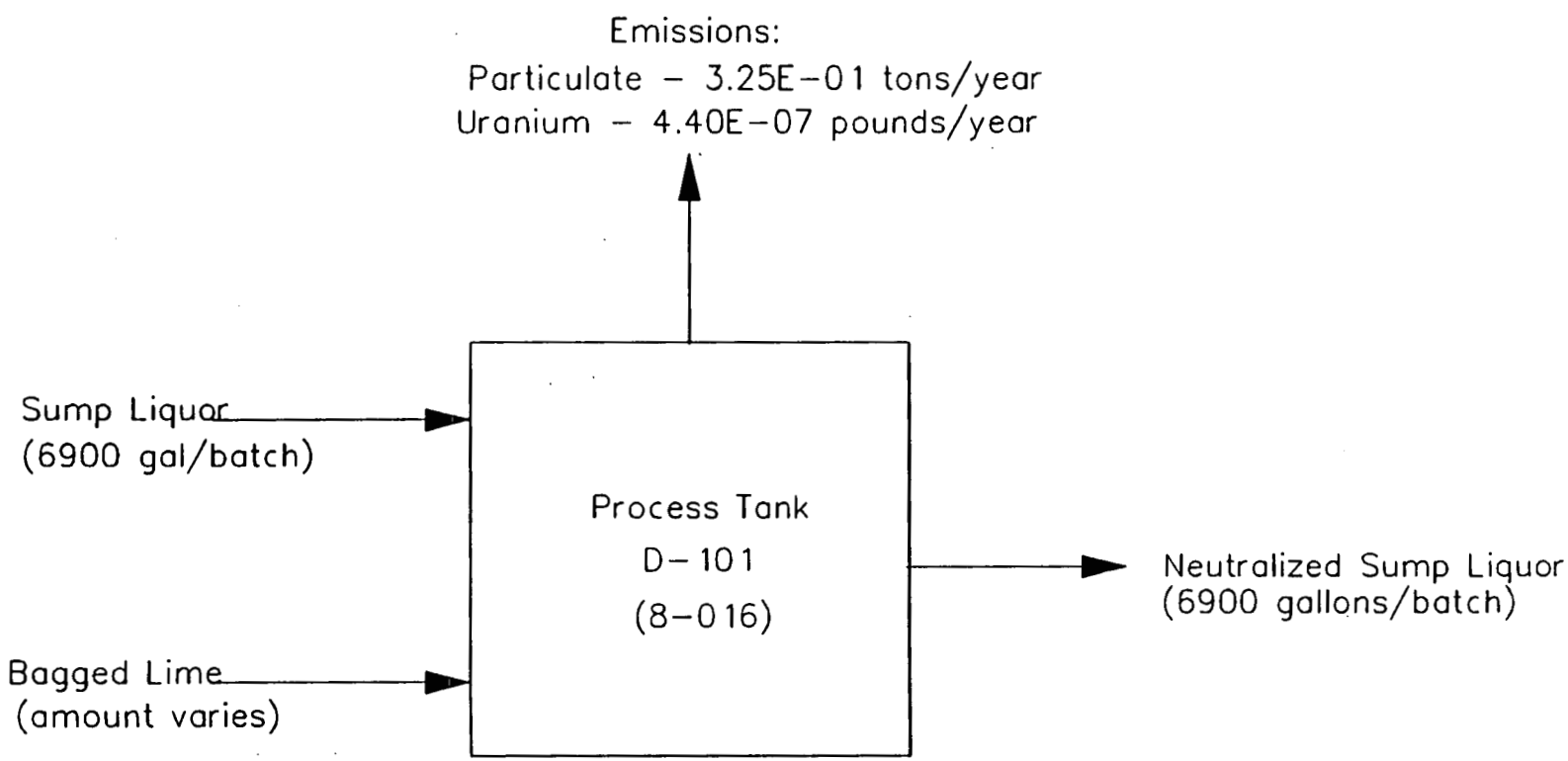

PROCESS FLOW DIAGRAM
PLANT 8 - NEUTRALIZATION OF SUMP LIQUOR

STORAGE TANK EMISSION REPORT

URANIUM EMISSIONS

e calculations for uranium emissions are based on known data where possible and where data for rameters is unknown or incomplete, conservative values producing a "worst case" condition for issions are used.

e conditions used to determine uranium emissions from the tank are as follows:

) Since uranium does not vaporize at storage conditions the only mechanism for uranium loss from the tank is by entrainment in the aerosol or mist generated during liquid storage and transfer.

) Uranium emissions are determined by multiplying the amount of water lost from the tank by entrainment in the aerosol or mist generated during liquid storage and transfer by an emission factor determined from laboratory tests conducted on Lab sample D-37, Lab #2-9846.

.) The emission factor has been determined to be 6 x 10^{-06} gU/l of solution; the maximum concentration of uranium entrained in the vapor from a boiling solution of 9% uranyl nitrate as determined by the laboratory tests.

.) Vapor losses from the tank are calculated using the TANKS software program, version 2.0.

;) Maximum emissions are five times the calculated annual emissions.

NKS PROGRAM 2.0 — 09/12/95
ISSIONS REPORT - DETAIL FORMAT — PAGE 1
NK IDENTIFICATION AND PHYSICAL CHARACTERISTICS

entification

Identification No.:	P276-95
City:	Cincinnati
State:	OH
Company:	FERMCO
Type of Tank:	Vertical Fixed Roof

nk Dimensions

Shell Height (ft):	10
Diameter (ft):	12
Liquid Height (ft):	9
Avg. Liquid Height (ft):	8
Volume (gallons):	6900
Turnovers:	260
Net Throughput (gal/yr):	1800000

Paint Characteristics

Shell Color/Shade:	Gray/Medium
Shell Condition:	Good
Roof Color/Shade:	Gray/Medium
Roof Condition:	Good

Roof Characteristics

Type:	Dome
Height (ft):	1.00
Radius (ft) (Dome Roof):	6.00
Slope (ft/ft) (Cone Roof):	0.0000

Breather Vent Settings

Vacuum Setting (psig):	0.00
Pressure Setting (psig):	0.00

Meteorological Data Used in Emission Calculations: Dayton Ohio

---

ANKS PROGRAM 2.0 — 09/12/9
IISSIONS REPORT - DETAIL FORMAT — PAGE
QUID CONTENTS OF STORAGE TANK

ture/Component	Month	Daily Liquid Surf Temperatures (deg F) Avg.	Min	Max.	Liquid Bulk Temp (deg F)	Vapor Pressures (psia) Avg.	Min.	Max.	Vapor Mol Weight	Liquid Mass Fract.	Vapor Mass Fract.	Mol. Weight	Basis for Vapor Pressure Calculations
ter-borne uranium solution	All	59.86	50.88	68.84	54.98	0.2560	0.1851	0.3507	18.000			18.00	Option 1

Annual Emission Calculations

Standing Losses (lb):	15.2559
Vapor Space Volume (cu ft):	678.58
Vapor Density (lb/cu ft):	0.0008
Vapor Space Expansion Factor:	0.080590
Vented Vapor Saturation Factor:	0.924722
Tank Vapor Space Volume	
Vapor Space Volume (cu ft):	678.58
Tank Diameter (ft):	12
Vapor Space Outage (ft):	6.00
Tank Shell Height (ft):	10
Average Liquid Height (ft):	8
Roof Outage (ft):	4.00
Roof Outage (Dome Roof)	
Roof Outage (ft):	4.00
Dome Radius (ft):	6
Shell Radius (ft):	6
Vapor Density	
Vapor Density (lb/cu ft):	0.0008
Vapor Molecular Weight (lb/lb-mole):	18.000000
Vapor Pressure at Daily Average Liquid Surface Temperature (psia):	0.255994
Daily Avg. Liquid Surface Temp.(deg. R):	519.53
Daily Average Ambient Temp. (deg. R):	511.57
Ideal Gas Constant R (psia cuft /(lb-mole-deg R)):	10.731
Liquid Bulk Temperature (deg. R):	514.65
Tank Paint Solar Absorptance (Shell):	0.68
Tank Paint Solar Absorptance (Roof):	0.68
Daily Total Solar Insolation Factor (Btu/sqft•day):	1160.00
Vapor Space Expansion Factor	
Vapor Space Expansion Factor:	0.080590
Daily Vapor Temperature Range (deg.R):	35.91
Daily Vapor Pressure Range (psia):	0.165664
Breather Vent Press. Setting Range(psia):	0.00
Vapor Pressure at Daily Average Liquid Surface Temperature (psia):	0.255994
Vapor Pressure at Daily Minimum Liquid Surface Temperature (psia):	0.185052
Vapor Pressure at Daily Maximum Liquid Surface Temperature (psia):	0.350716
Daily Avg. Liquid Surface Temp. (deg R):	519.53
Daily Min. Liquid Surface Temp. (deg R):	510.55
Daily Max. Liquid Surface Temp. (deg R):	528.51
Daily Ambient Temp. Range (deg.R):	19.20

Annual Emission Calculations

Vented Vapor Saturation Factor	
Vented Vapor Saturation Factor:	0.924722
Vapor Pressure at Daily Average Liquid Surface Temperature (psia):	0.255994
Vapor Space Outage (ft):	6.00
Withdrawal Losses (lb):	57.9773
Vapor Molecular Weight (lb/lb-mole):	18.000000
Vapor Pressure at Daily Average Liquid Surface Temperature (psia):	0.255994
Annual Net Throughput (gal/yr):	1800000
Turnover Factor:	0.2936
Maximum Liquid Volume (cuft):	1018
Maximum Liquid Height (ft):	9
Tank Diameter (ft):	12
Working Loss Product Factor:	1.00
Total Losses (lb):	73.23

Annual Emissions Report

Liquid Contents	Losses (lbs.): Standing	Withdrawal	T
Water-borne Uranium solution	15.26	57.98	7
Total:	15.26	57.98	7

URANIUM EMISSIONS

These calculations are based on conservative estimates, the actual emissions are expected t less than those indicated.

Annual Emissions: $\frac{73.23 \text{ lb water}}{\text{year}} \left| \frac{6 \times 10^{-06} \text{ lb U}}{1000 \text{ lb water}} \right| = 4.40 \text{ E-07 lb U/year}$

Maximum Emissions: 4.40 E-07 lb U/year x 5 = 2.20 E-06 lb U/year

STORAGE TANK EMISSION REPORT

PARTICULATE EMISSIONS

SUMPTIONS:

(1) Average number of batches/year = 260

(2) Potential number of batches/year = 365

(3) Five 50-lb bags of lime charged per batch

(4) 1-hour charging time

(5) Particulate (PM) loss = 1%

ERAGE EMISSIONS:

$$\frac{5 \text{ bags}}{\text{hour}} \cdot \frac{50 \text{ lb}}{\text{bag}} \cdot 0.01 = 2.5 \text{ lb PM/hr}$$

$$\frac{260 \text{ batches}}{\text{Year}} \cdot \frac{250 \text{ lb}}{\text{Batch}} \cdot 0.01 = 650 \text{ lb PM/year} = 0.325 \text{ tons PM/year}$$

TENTIAL EMISSIONS:

$$\frac{5 \text{ bags}}{\text{hour}} \cdot \frac{50 \text{ lb}}{\text{bag}} \cdot 0.01 = 2.5 \text{ lb PM/hr}$$

$$\frac{365 \text{ batches}}{\text{Year}} \cdot \frac{250 \text{ lb}}{\text{Batch}} \cdot 0.01 = 913 \text{ lb PM/year} = 0.456 \text{ tons PM/year}$$

LOWABLE EMISSIONS:

From the previous permit, the allowable PM emissions shall not exceed 5.27 lb PM/hour.

ISSION SUMMARY:

EMISSIONS	PARTICULATE		URANIUM
	Lbs/hr	Tons/yr	Lbs/year
ACTUAL	2.50E-00	3.25E-01	4.40E-07
POTENTIAL	2.50E-00	4.56E-01	2.20E-06
UNCONTROLLED POTENTIAL	2.50E-00	4.56E-01	2.20E-06
ALLOWABLE	5.27	----	2.20E-06

7201

OHIO ENVIRONMENTAL PROTECTION AGENCY
APPLICATION FOR A PERMIT TO OPERATE AN AIR CONTAMINANT SOURCE

D.O.E.-Fernald Environmental Management Project
Facility Name

Mr. Stephen M. Beckman
Person to Contact

7400 Willey Road
Facility Address

Post Office Box 538704
Mailing Address

Fernald — Hamilton — 45030
City — County — Zip

Cincinnati — OH — 45253-8704
City — State — Zip

513/ 648-3000
Telephone — Area — Number

513/ 648-5264
Telephone

#1431110128- T045
(Application no., if this is a renewal application)

4953
Std. Ind. Class. Code

1. Complete and attach any of the following appendices most appropriate to the air contaminant source. In addition, a compliance time schedule form is to be attached when applicable. Check as appropriate the following:

___Appendix A, Process
___Appendix B, Fuel-Burning Equipment
___Appendix C, Incinerator
___Appendix D, Surface Coating or Printing Operation
_X_Appendix E, Storage Tank
___Appendix H, Gasoline Dispensing Facility
___Appendix J, Loading Rack at Bulk Gasoline Plant or Terminal
___Appendix K, Surface Coating Line or Printing Line
___Appendix L, Solvent Metal Cleaning
___Appendix M, Fugitive Dust Emission Sources
___Specify Appendix No.
___Appendix N, Rubber Tire Manufacturing
___Appendix O, Dry Cleaning Facility
___Appendix P, Landfills
___Other Appendix ___
___Compliance Time Schedule

2. Description of Source (same as used on appendix): Plant 2/3 - Slop Water Storage Tank

3. Your identification for Source (same as used on appendix): 2-160 (F1-608)

I, being the individual specified in Rule 3745-35-02(B) of the Ohio Administrative Code, hereby apply for a Permit to Operate the air contaminant source(s) described herein. As required, the following additional documents are submitted as part of this application (describe all attachments):

Attachments:
Appendix E-2
Emission Calculations

Authorized Signature*
Terence D. Hagen
Director Environmental Compliance
Title
9/29/95
Date

000111

*Pursuant to OAC Rule 3745-35-02(B) (Permit to Operate).
Operation of an air contaminant source without an effective permit to operate is prohibited to 3704.05 Ohio Revised Code.

FOR OFFICIAL USE ONLY

Premise No.___/___/___/____
Source No.___/____
Application No._____/_____

DOE - FEMP
(Facility Name)
2-160 (F1-608)
(tank identificatio

APPENDIX E-2

INORGANIC MATERIAL STORAGE TANK OR
STORAGE TANK WITH CAPACITY LESS THAN 40,000 GALLONS

1. Tank identification: Name or number 2-160 (F1-608) Date Installed 1952 (month/ye

2. Tank capacity: 25,600 gallons

3. Tank shape: [X] Cylindrical [ ] Rectangular
[ ] Spherical [ ] Other, specify _____

4. Tank dimensions: Diameter 15' 6" Height 18' Length --- Width --

5. Tank shell material: [ ] Steel [ ] Aluminum [X] Other, specify Stainless Stee

6. Type of tank:
[ ] External floating roof tank
[ ] Internal floating roof tank
[X] Fixed roof tank
[ ] Vertical cylindrical tank
[ ] Horizontal cylindrical tank
[ ] Pressure tank
[ ] Other, specify _____

7. Location of tank: [X] Outdoors [ ] Indoors [ ] Underground

8. Type of filling: [X] Splash [ ] Submerged [ ] Other, specify _____

9. If this tank is located outdoors and above ground, provide the paint color of the tank

[ ] Aluminum (specular) [ ] Light gray [ ] White
[ ] Aluminum (diffuse) [ ] Medium gray [X] Other, specify Stainless

Condition of paint: [ ] Good [ ] Poor
N/A

10. If this tank is equipped with or vented to a vapor control system, complete (a) through of this item. None

a) Type of vapor control system _____
Manufacturer _____ Make or model _____
Date installed (month and year) _____

b) Date tank was equipped with or vented to vapor control system (month & year) _____

c) Specify the rate of emission or percent control (by weight) for any pollutants b controlled: _____
(Attach calculations and test data to support response, unless previously submitted)

000112

DOE - FEMP
(Facility Name)
2-160 (F1-608)
(tank identification)

Complete the table below for any pressure or vacuum relief vent valve.

Type of Vent Valve	Pressure Setting	Vacuum Setting	If pressure relief is discharged to a vapor control, identify the vapor control.
None			

Operational Data (complete (a) through (g) of this item for all materials stored or to be stored. Attach additional sheets if necessary.)

a) Material Uranium contaminated wastewaters Trade Name None
Density: 8.34 lbs/gal or -- ° API Producer FERMCO

b) Temperature of stored material: Average AMB °F and Maximum AMB ° F
(If temperature is approximately outdoor ambient temperature, write "AMB".)

c) Vapor pressure of stored material (Complete i, ii, iii of this item. If vapor pressure is not known, write "unknown"):

i.) Actual vapor pressure: 0.2480 psia at average storage temperature
0.3331 psia at maximum storage temperature

ii.) Reid vapor pressure: Average unkn psi and minimum-maximum unkn - unkn psi

iii.) If material stored is a gas or liquified gas, provide the pressure at which it is stored: N/A psi gage at N/A °F

d) Type of liquid organic material (If the material is an organic liquid other than a gasoline, fuel oil, kerosene, crude oil, lubricant or other petroleum liquid, answer the question below.) N/A

Is it a photochemically reactive material? [ ] Yes [ ] No

e) Type of waste material (If the material is a waste, answer the question below.)
N/A
Is it a hazardous waste? [ ] yes [ ] No
If yes, identify type (EPA hazardous waste number) _____

f) Indicate the year (or 12-month period) for item (g): 1995

g) Annual throughput of material: 4,800,000. gallons.

ompleted by Kip Klee Date 8/28/95

STORAGE TANK EMISSION REPORT

The calculations for uranium emissions are based on known data where possible and where data parameters is unknown or incomplete, conservative values producing a "worst case" condition emissions are used.

The conditions used to determine uranium emissions from the tank are as follows:

(1) Since uranium does not vaporize at storage conditions the only mechanism for uranium l from the tank is by entrainment in the aerosol or mist generated during liquid storage transfer.

(2) Uranium emissions are determined by multiplying the amount of water lost from the tank entrainment in the aerosol or mist generated during liquid storage and transfer by emission factor determined from laboratory tests conducted on Lab sample D-37, Lab #2-98

(3) The emission factor has been determined to be 6 x 10^{-06} gU/l of solution; the maxi concentration of uranium entrained in the vapor from a boiling solution of 9% uranyl nitr as determined by the laboratory tests.

(4) Vapor losses from the tank are calculated using the TANKS software program, version 2.(

(5) Maximum emissions are five times the calculated annual emissions.

TANKS PROGRAM 2.0 09/
EMISSIONS REPORT - DETAIL FORMAT P
TANK IDENTIFICATION AND PHYSICAL CHARACTERISTICS

Identification

Identification No.:	T045-95
City:	Cincinnati
State:	OH
Company:	FERMCO
Type of Tank:	Vertical Fixed Roof

Tank Dimensions

Shell Height (ft):	18
Diameter (ft):	15
Liquid Height (ft):	18
Avg. Liquid Height (ft):	9
Volume (gallons):	23797
Turnovers:	200
Net Throughput (gal/yr):	4759400

Paint Characteristics

Shell Color/Shade:	Aluminum/Diffuse
Shell Condition:	Good
Roof Color/Shade:	Aluminum/Diffuse
Roof Condition:	Good

Roof Characteristics

Type:	Dome
Height (ft):	1.50
Radius (ft) (Dome Roof):	8.00
Slope (ft/ft) (Cone Roof):	0.0000

Breather Vent Settings

Vacuum Setting (psig):	0.00
Pressure Setting (psig):	0.00

Meteorological Data Used in Emission Calculations: Da
Ohio

TANKS PROGRAM 2.0 09
EMISSIONS REPORT - DETAIL FORMAT
LIQUID CONTENTS OF STORAGE TANK

Mixture/Component	Month	Daily Liquid Surf. Temperatures (deg F) Avg.	Min.	Max.	Liquid Bulk Temp. (deg F)	Vapor Pressures (psia) Avg.	Min.	Max.	Vapor Mol. Weight	Liquid Mass Fract.	Vapor Mass Fract.	Mol. Weight	Basis for Vapor Pressure Calculations
Water-borne Uranium solution	All	58.85	50.52	67.18	54.50	0.2480	0.1822	0.3331	18.000			18.00	Option 1

000114

nual Emission Calculations

anding Losses (lb):	40.1421
Vapor Space Volume (cu ft):	2125.62
Vapor Density (lb/cu ft):	0.0008
Vapor Space Expansion Factor:	0.074684
Vented Vapor Saturation Factor:	0.863474

ınk Vapor Space Volume

Vapor Space Volume (cu ft):	2125.62
Tank Diameter (ft):	15
Vapor Space Outage (ft):	12.03
Tank Shell Height (ft):	18
Average Liquid Height (ft):	9
Roof Outage (ft):	3.03

ɔof Outage (Dome Roof)

Roof Outage (ft):	3.03
Dome Radius (ft):	8
Shell Radius (ft):	8

ıpor Density

Vapor Density (lb/cu ft):	0.0008
Vapor Molecular Weight (lb/lb-mole):	18.000000
Vapor Pressure at Daily Average Liquid Surface Temperature (psia):	0.248015
Daily Avg. Liquid Surface Temp.(deg. R):	518.52
Daily Average Ambient Temp. (deg. R):	511.57
Ideal Gas Constant R (psia cuft /(lb-mole-deg R)):	10.731
Liquid Bulk Temperature (deg. R):	514.17
Tank Paint Solar Absorptance (Shell):	0.60
Tank Paint Solar Absorptance (Roof):	0.60
Daily Total Solar Insolation Factor (Btu/sqft•day):	1160.00

apor Space Expansion Factor

Vapor Space Expansion Factor:	0.074684
Daily Vapor Temperature Range (deg.R):	33.31
Daily Vapor Pressure Range (psia):	0.150928
Breather Vent Press. Setting Range(psia):	0.00
Vapor Pressure at Daily Average Liquid Surface Temperature (psia):	0.248015
Vapor Pressure at Daily Minimum Liquid Surface Temperature (psia):	0.182208
Vapor Pressure at Daily Maximum Liquid Surface Temperature (psia):	0.333136
Daily Avg. Liquid Surface Temp. (deg R):	518.52
Daily Min. Liquid Surface Temp. (deg R):	510.19
Daily Max. Liquid Surface Temp. (deg R):	526.85
Daily Ambient Temp. Range (deg.R):	19.20

Annual Emission Calculations

Vented Vapor Saturation Factor

Vented Vapor Saturation Factor:	0.863474
Vapor Pressure at Daily Average Liquid Surface Temperature (psia):	0.248015
Vapor Space Outage (ft):	12.03

Withdrawal Losses (lb):	160.1974
Vapor Molecular Weight (lb/lb-mole):	18.000000
Vapor Pressure at Daily Average Liquid Surface Temperature (psia):	0.248015
Annual Net Througnput (gal/yr):	4759400
Turnover Factor:	0.3167
Maximum Liquid Volume (cuft):	3181
Maximum Liquid Height (ft):	18
Tank Diameter (ft):	15
Working Loss Product Factor:	1.00
Total Losses (lb):	200.34

Annual Emissions Report

Liquid Contents	Losses (lbs.): Standing	Withdrawal	Total
Water-borne Uranium solution	40.14	160.20	200.34
Total:	40.14	160.20	200.34

IRANIUM EMISSIONS

'hese calculations are based on conservative estimates, the actual emissions are expected to b ess than those indicated.

Annual Emissions: $\frac{200.34 \text{ lb water}}{\text{year}} \left| \frac{6 \times 10^{-06} \text{ lb U}}{1000 \text{ lb water}} \right| = 1.20 \text{ E-06 lb U/year}$

Maximum Emissions: 1.20 E-06 lb U/year x 5 = 6.01 E-06 lb U/year

OHIO ENVIRONMENTAL PROTECTION AGENCY
APPLICATION FOR A PERMIT TO OPERATE
AN AIR CONTAMINANT SOURCE

P: 7201

D.O.E.-Fernald Environmental Management Project
Facility Name

Mr. Stephen M. Beckman
Person to Contact

7400 Willey Road
Facility Address

Post Office Box 538704
Mailing Address

Fernald Hamilton 45030
City County Zip

Cincinnati OH 45253-8704
City State Zip

513/ 648-3000
Telephone Area Number

513/ 648-5264
Telephone

#1431110128- 7046
(Application no., if this is a renewal application)

4953
Std. Ind. Class. Code

1. Complete and attach any of the following appendices most appropriate to the air contaminant source. In addition, a compliance time schedule form is to be attached when applicable. Check as appropriate the following:

___Appendix A, Process
___Appendix B, Fuel-Burning Equipment
___Appendix C, Incinerator
___Appendix D, Surface Coating or Printing Operation
_X_Appendix E, Storage Tank
___Appendix H, Gasoline Dispensing Facility
___Appendix J, Loading Rack at Bulk Gasoline Plant or Terminal.
___Appendix K, Surface Coating Line or Printing Line
___Appendix L, Solvent Metal Cleaning
___Appendix M, Fugitive Dust Emission Sources
_____ Specify Appendix No.
___Appendix N, Rubber Tire Manufacturing
___Appendix O, Dry Cleaning Facility
___Appendix P, Landfills
___Other Appendix _____
___Compliance Time Schedule

2. Description of Source (same as used on appendix): Plant 2/3 - Slop Water Storage Tank

3. Your identification for Source (same as used on appendix): 2-158 (F2E-601)

I, being the individual specified in Rule 3745-35-02(B) of the Ohio Administrative Code, hereby apply for a Permit to Operate the air contaminant source(s) described herein. As required, the following additional documents are submitted as part of this application (describe all attachments):

Attachments:
Appendix E-2
Emission Calculations

Authorized Signature
Terence D. Hagen
Director Environmental Compliance
Title
9/29/95
Date

000116

*Pursuant to OAC Rule 3745-35-02(B) (Permit to Operate).
Operation of an air contaminant source without an effective permit to operate is prohibited to 3704.05 Ohio Revised Code.

FOR OFFICIAL USE ONLY

Premise No.___/___/___/____
Source No.___/____
Application No._____/_____

DOE - FEMP
(Facility Name)
2-158 (F2E-601
(tank identificatio

APPENDIX E-2

INORGANIC MATERIAL STORAGE TANK OR
STORAGE TANK WITH CAPACITY LESS THAN 40,000 GALLONS

1. Tank identification: Name or number 2-158 (F2E-601) Date Installed 195
(month/ye

2. Tank capacity: 25,600 gallons

3. Tank shape: [X] Cylindrical [ ] Rectangular
[ ] Spherical [ ] Other, specify _____

4. Tank dimensions: Diameter 15' 6" Height 18' Length --- Width --

5. Tank shell material: [ ] Steel [ ] Aluminum [X] Other, specify Stainless Stee

6. Type of tank:
[ ] External floating roof tank
[ ] Internal floating roof tank
[X] Fixed roof tank
[ ] Vertical cylindrical tank
[ ] Horizontal cylindrical tank
[ ] Pressure tank
[ ] Other, specify _____

7. Location of tank: [X] Outdoors [ ] Indoors [ ] Underground

8. Type of filling: [X] Splash [ ] Submerged [ ] Other, specify _____

9. If this tank is located outdoors and above ground, provide the paint color of the tank

[ ] Aluminum (specular) [ ] Light gray [ ] White
[ ] Aluminum (diffuse) [ ] Medium gray [X] Other, specify Stainless

Condition of paint: [ ] Good [ ] Poor
N/A

10. If this tank is equipped with or vented to a vapor control system, complete (a) through
of this item. None

a) Type of vapor control system _____
Manufacturer _____ Make or model _____
Date installed (month and year) _____

b) Date tank was equipped with or vented to vapor control system (month & year) _____

c) Specify the rate of emission or percent control (by weight) for any pollutants b
controlled: _____
(Attach calculations and test data to support response, unless previously submitted)

000117

DOE - FEMP
(Facility Name)
2-158 (F2E-601)
(tank identification)

Complete the table below for any pressure or vacuum relief vent valve.

Type of Vent Valve	Pressure Setting	Vacuum Setting	If pressure relief is discharged to a vapor control, identify the vapor control.
None			

Operational Data (complete (a) through (g) of this item for all materials stored or to be stored. Attach additional sheets if necessary.)

a) Material Uranium Contaminated Wastewaters Trade Name None
Density: 8.34 lbs/gal or -- ° API Producer FERMCO

b) Temperature of stored material: Average AMB °F and Maximum AMB ° F
(If temperature is approximately outdoor ambient temperature, write "AMB".)

c) Vapor pressure of stored material (Complete i, ii, iii of this item. If vapor pressure is not known, write "unknown"):

i.) Actual vapor pressure: 0.2480 psia at average storage temperature
0.3331 psia at maximum storage temperature

ii.) Reid vapor pressure: Average unkn psi and minimum-maximum unkn - unkn psi

iii.) If material stored is a gas or liquified gas, provide the pressure at which it is stored: N/A psi gage at N/A °F

d) Type of liquid organic material (If the material is an organic liquid other than a gasoline, fuel oil, kerosene, crude oil, lubricant or other petroleum liquid, answer the question below.) N/A

Is it a photochemically reactive material? [ ] Yes [ ] No

e) Type of waste material (If the material is a waste, answer the question below.)
N/A
Is it a hazardous waste? [ ] yes [ ] No
If yes, identify type (EPA hazardous waste number) _____

f) Indicate the year (or 12-month period) for item (g): 1995

g) Annual throughput of material: 4,800,000. gallons.

mpleted by Kip Klee Date 8/28/95

STORAGE TANK EMISSION REPORT

The calculations for uranium emissions are based on known data where possible and where data parameters is unknown or incomplete, conservative values producing a "worst case" condition emissions are used.

The conditions used to determine uranium emissions from the tank are as follows:

(1) Since uranium does not vaporize at storage conditions the only mechanism for uranium from the tank is by entrainment in the aerosol or mist generated during liquid storage transfer.

(2) Uranium emissions are determined by multiplying the amount of water lost from the tan entrainment in the aerosol or mist generated during liquid storage and transfer b emission factor determined from laboratory tests conducted on Lab sample D-37, Lab #2-9

(3) The emission factor has been determined to be 6 x 10^{-06} gU/l of solution; the max concentration of uranium entrained in the vapor from a boiling solution of 9% uranyl nit as determined by the laboratory tests.

(4) Vapor losses from the tank are calculated using the TANKS software program, version 2.

(5) Maximum emissions are five times the calculated annual emissions.

TANKS PROGRAM 2.0 09
EMISSIONS REPORT - DETAIL FORMAT P
TANK IDENTIFICATION AND PHYSICAL CHARACTERISTICS

Identification

Identification No.:	T046-95
City:	Cincinnati
State:	OH
Company:	FERMCO
Type of Tank:	Vertical Fixed Roof

Tank Dimensions

Shell Height (ft):	18
Diameter (ft):	15
Liquid Height (ft):	18
Avg. Liquid Height (ft):	9
Volume (gallons):	23797
Turnovers:	200
Net Throughput (gal/yr):	4759400

Paint Characteristics

Shell Color/Shade:	Aluminum/Diffuse
Shell Condition:	Good
Roof Color/Shade:	Aluminum/Diffuse
Roof Condition:	Good

Roof Characteristics

Type:	Dome
Height (ft):	1.50
Radius (ft) (Dome Roof):	8.00
Slope (ft/ft) (Cone Roof):	0.0000

Breather Vent Settings

Vacuum Setting (psig):	0.00
Pressure Setting (psig):	0.00

Meteorological Data Used in Emission Calculations: D
Ohio

TANKS PROGRAM 2.0 09
EMISSIONS REPORT - DETAIL FORMAT
LIQUID CONTENTS OF STORAGE TANK

Mixture/Component	Month	Daily Liquid Surf. Temperatures (deg F) Avg.	Min.	Max.	Liquid Bulk Temp. (deg F)	Vapor Pressures (psia) Avg.	Min.	Max.	Vapor Mol. Weight	Liquid Mass Fract.	Vapor Mass Fract.	Mol. Weight	Basis for Vapor Pressure Calculations
Water-borne Uranium solution	All	55.85	50.52	67.18	54.50	0.2480	0.1822	0.3331	18.000			18.00	Option 1

TANKS PROGRAM 2.0 09/05/95
EMISSIONS REPORT - DETAIL FORMAT PAGE 3
DETAIL CALCULATIONS (AP-42)

Annual Emission Calculations

Standing Losses (lb):	40.1421
Vapor Space Volume (cu ft):	2125.62
Vapor Density (lb/cu ft):	0.0008
Vapor Space Expansion Factor:	0.074684
Vented Vapor Saturation Factor:	0.863474
Tank Vapor Space Volume	
Vapor Space Volume (cu ft):	2125.62
Tank Diameter (ft):	15
Vapor Space Outage (ft):	12.03
Tank Shell Height (ft):	18
Average Liquid Height (ft):	9
Roof Outage (ft):	3.03
Roof Outage (Dome Roof)	
Roof Outage (ft):	3.03
Dome Radius (ft):	8
Shell Radius (ft):	8
Vapor Density	
Vapor Density (lb/cu ft):	0.0008
Vapor Molecular Weight (lb/lb-mole):	18.000000
Vapor Pressure at Daily Average Liquid Surface Temperature (psia):	0.248015
Daily Avg. Liquid Surface Temp.(deg. R):	518.52
Daily Average Ambient Temp. (deg. R):	511.57
Ideal Gas Constant R (psia cuft /(lb-mole-deg R)):	10.731
Liquid Bulk Temperature (deg. R):	514.17
Tank Paint Solar Absorptance (Shell):	0.60
Tank Paint Solar Absorptance (Roof):	0.60
Daily Total Solar Insolation Factor (Btu/sqft•day):	1160.00
Vapor Space Expansion Factor	
Vapor Space Expansion Factor:	0.074684
Daily Vapor Temperature Range (deg.R):	33.31
Daily Vapor Pressure Range (psia):	0.150928
Breather Vent Press. Setting Range(psia):	0.00
Vapor Pressure at Daily Average Liquid Surface Temperature (psia):	0.248015
Vapor Pressure at Daily Minimum Liquid Surface Temperature (psia):	0.182208
Vapor Pressure at Daily Maximum Liquid Surface Temperature (psia):	0.333136
Daily Avg. Liquid Surface Temp. (deg R):	518.52
Daily Min. Liquid Surface Temp. (deg R):	510.19
Daily Max. Liquid Surface Temp. (deg R):	526.85
Daily Ambient Temp. Range (deg.R):	19.20

TANKS PROGRAM 2.0 09/05/9
EMISSIONS REPORT - DETAIL FORMAT PAGE
DETAIL CALCULATIONS (AP-42)

Annual Emission Calculations

Vented Vapor Saturation Factor	
Vented Vapor Saturation Factor:	0.863474
Vapor Pressure at Daily Average Liquid Surface Temperature (psia):	0.248015
Vapor Space Outage (ft):	12.03
Withdrawal Losses (lb):	160.1974
Vapor Molecular Weight (lb/lb-mole):	18.000000
Vapor Pressure at Daily Average Liquid Surface Temperature (psia):	0.248015
Annual Net Throughput (gal/yr):	4759400
Turnover Factor:	0.3167
Maximum Liquid Volume (cuft):	3181
Maximum Liquid Height (ft):	18
Tank Diameter (ft):	15
Working Loss Product Factor:	1.00
Total Losses (lb):	200.34

TANKS PROGRAM 2.0 09/05/9
EMISSIONS REPORT - DETAIL FORMAT PAGE
INDIVIDUAL TANK EMISSION TOTALS

Annual Emissions Report

Liquid Contents	Losses (lbs.): Standing	Withdrawal	Total
Water-borne Uranium solution	40.14	160.20	200.3
Total:	40.14	160.20	200.3

URANIUM EMISSIONS

These calculations are based on conservative estimates, the actual emissions are expected to b less than those indicated.

Annual Emissions: $\frac{200.34 \text{ lb water}}{\text{year}} \left| \frac{6 \times 10^{-06} \text{ lb U}}{1000 \text{ lb water}} \right| = 1.20 \text{ E-06 lb U/year}$

Maximum Emissions: 1.20 E-06 lb U/year x 5 = 6.01 E-06 lb U/year