7418 U-007-409.9

U. S. DOE, UMTRA PROJECT, REMEDIAL ACTION PLANNING AND DISPOSAL CELL DESIGN, TO COMPLY WITH THE PROPOSED WPA STANDARDS (40 CFR, PART 192), SECTION 3.2, PAGE 8, DOE/AL-400503 - (USED AS A REFERENCE IN OU5 FS, APPENDIX F)

01/00/89

DOE/UMTRA-400503
DOE PUBLIC
110
REPORT

FEMP LIBRARY
JUN 27 1994

DOE/UMTRA-400503
CY (1)
7418

DOE/UMTRA--400503

DE91 005805

UMTRA PROJECT REMEDIAL ACTION PLANNING AND DISPOSAL CELL DESIGN TO COMPLY WITH THE PROPOSED EPA STANDARDS (40 CFR PART 192)

JANUARY 1989

MASTER

DISTRIBUTION OF THIS DOCUMENT IS UNLIMITED

000001

EXECUTIVE SUMMARY

In September 1987, the U.S. Environmental Protection Agency (EPA) proposed standards for remedial actions that address groundwater protection requirements (52 FR36000-36008) applicable to the Uranium Mill Tailings Radiation Control Act Title I sites. (See Appendix C). Subpart A of the proposed groundwater protection standards consists of requirements for the control of potential contaminant releases to groundwater at disposal sites. Subpart B addresses the standards applicable to remediating pre-existing groundwater contamination. Subpart C discusses the implementation of the standards and the criteria for substituting supplemental standards for those in Subparts A and B.

The U.S. Department of Energy (DOE) supports the intent of the standards to protect human health and the environment. The final groundwater standards are not likely to be published until the spring of 1989. The DOE, in order to proceed with the Uranium Mill Tailings Remedial Action (UMTRA) Project, adopted and is working in accordance with the following interim policy statement:

> During the period prior to promulgation of the final standards, the DOE intends to comply with Subparts A and C of the proposed standards as they apply to disposal sites and the design and construction of disposal cells. The provisions of Subparts B and C, as they apply to groundwater remediation will be complied with following promulgation of the final standards.

The DOE has provided comments on the proposed standards and has undertaken numerous special studies and design reviews directed toward compliance with the standards and implementation of the DOE interim policy. This report describes the results of the special studies and the way in which remedial action plans, disposal cell designs, and groundwater compliance strategies have been, are, and will be implemented by the DOE in light of the requirements of the proposed and anticipated final EPA groundwater protection standards. The following are brief descriptions of the results of the special studies and the design and policy implications to the UMTRA Project:

- Geomembranes cannot be used to limit infiltration because they cannot be shown to last for the design life of the disposal cell.

- Of the many alternative materials evaluated to limit infiltration, only bentonite (alone or as a soil amendment) has a sufficiently low permeability and the longevity required to reduce infiltration below that attainable with compacted soils. Bentonite will accordingly be used as needed to enhance infiltration barriers.

- An effective way to reduce infiltration is to shed precipitation from the pile as rapidly as possible through high permeability drains in the cover. Accordingly, UMTRA Project pile covers will incorporate drains and filters with the highest practical permeability.

- Freezing and thawing may affect the permeability of infiltration barriers; therefore, covers will be designed to protect the infiltration barrier.

- Vegetation establishes naturally on covers, even those incorporating rock riprap. Moreover, vegetation promotes evapotranspiration, which is effective in limiting infiltration to the disposal cell. Accordingly, where appropriate and possible, the topslopes of piles will incorporate provision for vegetation growth and control.

- The infiltration barriers of covers at disposal cells in arid climates will remain partially saturated for the design life of the facility. Accordingly, at appropriate sites the partially saturated hydraulic conductivity of the infiltration barrier soil will be the operative design infiltration parameter.

- Hydrogeochemical modification of tailings is judged to be possible with extensive mixing of the tailings with geochemical modifiers. This is a very expensive procedure which may not be required for compliance with the standards.

- Source term modification (i.e., reducing the quantity of contaminants in the tailings) by flushing the tailings before placement is probably not practical due to the time constraints imposed by law on the UMTRA Project and the difficulty of disposing of the resulting wastes and sludges.

- The use of liners beneath disposal cells is neither feasible nor practical, and is probably counterproductive to the long-term attainment of the EPA groundwater standards.

The DOE has reformulated its technical approach to the compilation of disposal cell designs in the light of the proposed standards and the results of the special studies. The DOE has defined a series of possible disposal cell layouts, perimeter dike details, and disposal cell covers which lead to compliance with the proposed standards and which achieve the following design objectives or criteria:

- A design life of 1,000 years to the extent achievable, and at any rate for 200 years.

- Control of the dispersion of tailings and contaminated materials and prevention of their use by humans and animals.

- Minimum reliance on active human maintenance.

- Control of seepage of contaminants from the disposal facility to the extent required to achieve compliance with the groundwater standards.

The disposal cell layouts, perimeter dike details, and cover components identified and incorporated into UMTRA Project remedial action plans by the DOE limit infiltration through the cover. to the extent practical and achievable, to a water flux rate of approximately $1x10^{-7}$ to $1x10^{-9}$ centimeters per second or less. Due to this limited seepage it is possible to achieve the proposed EPA groundwater standards maximum concentration limits at the point of compliance at most UMTRA Project disposal sites. At a limited number of sites the DOE has or intends to apply alternate concentration limits or supplemental standards. The special studies and disposal cell design approaches formulated by the DOE establish the basis for demonstrating that a specific cell design limits seepage, hence groundwater contamination, to limits that are as low as reasonably achievable, a fact that must be established if alternate concentration limits or supplemental standards are applied.

The disposal sites on the UMTRA Project cover a wide range of environmental regions of the United States, including considerable variation in precipitation, elevation, temperature, and demographic considerations. For these reasons, the DOE has always approached each site on a site-specific basis and formulated a remedial action plan appropriate to the particular needs and constraints of the site. The DOE intends to continue this practice, and is continuing to formulate and adopt site-specific remedial action plans, disposal cell designs, and groundwater compliance strategies that meet applicable standards and that are resource-conserving and cost-effective.

In accordance with the stated DOE policy regarding compliance with the proposed EPA groundwater standards and in further pursuit of the objectives stated above, the DOE is revising the following UMTRA Project standard operating procedure documents to incorporate the procedures, approaches, and requirements applicable to the EPA groundwater standards: the Technical Approach Document; the Generic Surveillance and Maintenance Guidance Document; and the UMTRA Project Site Management Manual.

The DOE estimates that the additional cost of Subpart A compliance could be as much as $60 million and Subpart B compliance could cost between $300 million and one billion dollars. Accordingly, while always providing for protection of human health and the environment, the DOE will continue to seek new and cost-effective ways to design and construct disposal facilities that comply with applicable standards and criteria. When the final standards are promulgated, the DOE will seek the most cost-effective ways to comply with the standards as they apply to groundwater remediation.

TABLE OF CONTENTS

Section		Page
1.0	INTRODUCTION	1
1.1	General	1
1.2	Proposed EPA groundwater protection standards	1
1.3	Purpose of this report	2
1.4	DOE policy on compliance with proposed EPA groundwater protection standards	2
1.5	Layout of the report	3
2.0	TYPICAL DISPOSAL CELL DESIGNS BEFORE THE STANDARDS	6
3.0	SPECIAL STUDIES	8
3.1	General	8
3.2	Geomembranes	8
3.3	Alternate cover materials	8
3.4	Alternate cover designs	10
3.5	Freeze/thaw	18
3.6	Vegetated covers	18
3.7	Radon/infiltration barrier moisture content	19
3.8	Hydrogeochemistry	22
3.9	Source modification	23
3.10	Aquifer restoration/characterization	23
3.11	Sodium-amended radon barriers	24
3.12	ACLs and supplemental standards	25
3.13	Future studies	25
3.14	Conclusions	25
4.0	REMEDIAL ACTION PLAN CRITERIA AND APPROACHES	27
4.1	Disposal cell design criteria	27
4.2	Groundwater compliance strategies	28
4.2.1	General	28
4.2.2	Maximum Concentration Limits	28
4.2.3	Supplemental Standards	29
4.2.4	Alternate Concentration Limits	29
4.3	Performance assessments	30
5.0	THE CHECKLIST DESIGN APPROACH	31
6.0	CHECKLIST CELL DESIGNS	33
7.0	CHECKLIST APPROACH TO PERIMETER DIKE DESIGN	39
7.1	General	39
7.2	Pile stabilization in place	39
7.3	Pile relocation	41
8.0	THE CHECKLIST COVER	43
8.1	Checklist cover objectives	43
8.2	Application of the checklist cover approach	43
8.3	Specific covers	44

TABLE OF CONTENTS (Continued)

Section		Page
9.0	TECHNICAL APPROACH TO THE USE OF BENTONITE FOR INFILTRATION BARRIERS	46
	9.1 General	46
	9.2 Claymax	46
	9.3 Bentonite only	50
	9.4 Bentonite-ammended soil	50
10.0	TECHNICAL APPROACH TO THE DESIGN OF SOIL COVERS	52
	10.1 Observations at Shiprock	52
	10.2 Reasons for using vegetation	53
	10.3 Engineering design of soil covers	53
	10.4 Biointrusion	57
11.0	OTHER DESIGN APPROACHES	61
	11.1 Low-level radioactive facility covers	61
	11.2 The Spanish cover	61
	11.3 The Los Alamos cover	61
	11.4 Cover design for transuranic waste at the Hanford Reservation	61
12.0	COVER PERFORMANCE EVALUATIONS	67
	12.1 General	67
	12.2 The Standard Cover	67
	12.3 The Double Drain Cover	70
	12.4 The Full Component Cover	71
13.0	TRANSIENT DRAINAGE	72
	13.1 General	72
	13.2 Reasons for initial excess moisture in piles	72
	13.3 A detailed explanation of transient drainage	73
	13.4 Analysis of transient drainage	74
	13.4.1 Stabilization in place	74
	13.4.2 Relocated tailings	76
	13.5 Technical and compliance approaches for piles stabilized in place	78
	13.6 Construction water for relocated tailings	78
	13.7 Liners	80
14.0	IMPACT OF STANDARDS ON ALL SITES	82
	14.1 Special study implications to cell design	82
	14.2 Site-specific analysis	82
	14.3 Cost implication	89
15.0	CASE HISTORIES	91
	15.1 Grand Junction	91
	15.2 Green River	91
	15.3 Gunnison	94
	15.4 Durango	94

TABLE OF CONTENTS (Concluded)

Section	Page
16.0 THE FUTURE	98
16.1 The final EPA groundwater standards	98
16.2 Continuing special studies	98
16.3 The concurrence of reviewers	99
16.4 The revised UMTRA Project documents	99
17.0 SUBPART B COMPLIANCE	100
REFERENCES	101
Appendix A, Regulatory Background and Details of EPA Standards	
Appendix B, Component Elimination Criteria	
Appendix C, Proposed EPA Groundwater Protection Standards	

LIST OF FIGURES

Figure		Page
2.1	Typical UMTRA Project pile layout	7
3.1	The corrugated cover	11
3.2	Capillary break with corrugated cover	13
3.3	Capillary break over narrow disposal trench	14
3.4	Drain permeability vs. runoff time	16
3.5	Infiltration vs. runoff time	17
3.6	Instrumentation at Station 1 on the Shiprock disposal facility	21
6.1	The constrained cell	34
6.2	The buttressed cell	35
6.3	Perimeter dike removal disposal cell layout	37
6.4	Perimeter dike erosion assessment	38
7.1	"Checklist" perimeter dike alternatives	40
8.1	"Checklist" top cover	45
9.1	Position of bentonite mat infiltration barrier in UMTRA covers	47
9.2	Bentonite mat infiltration barrier on cell sideslopes	48
10.1	Cover design concepts for prevention of gullies	55
10.2	Cover with inclined drainage layers and flat top	56
10.3	Factors in the evaluation of cover components for biointrusion hazard	58
11.1	Cover for low-level radioactive and hazardous waste facility, Richland, Washington	62
11.2	Remedial works for inactive uranium mill tailings pile in Spain	63
11.3	Proposed cover for low-level radioactive waste trenches, Los Alamos, New Mexico	64
11.4	Cover proposed for protection of buried transuranic waste	66
13.1	Transient and steady state seepage through cell cover and tailings	75
15.1	Grand Junction proposed cover design	92
15.2	Green River disposal cell: alternate perimeter designs	93
15.3	Disposal cell details, Landfill, Gunnison, Colorado	95
15.4	Final cover design, Durango, Colorado	97

LIST OF TABLES

Table		Page
3.1	Alternate cover materials	9
10.1	Characteristics related to the likelihood of biointrusion in a stabilized pile with a vegetative cover	59
12.1	Cover design objectives	68
14.1	Application of special study findings at specific sites: impact on cell design	83
14.2	Application of groundwater special studies at specific sites	84
14.3	Site Remedial Action Plans	85
14.4	Site cover checklist components	86
14.5	Site climatological characterization data	87

1.0 INTRODUCTION

1.1 GENERAL

The Uranium Mill Tailings Remedial Action (UMTRA) Project involves stabilizing 24 inactive uranium mill tailings piles in 10 states. Remedial work must meet standards established by the U.S. Environmental Protection Agency (EPA). The EPA standards, as initially published in 1983, required, among other things, that the remedial action be effective for at least 1,000 years, to the extent practical, and in any case for at least 200 years. Remedial action must be designed and constructed to prevent dispersion of the tailings and other contaminated materials, and must prevent the inadvertent use of the tailings by man. Remedial actions should not rely on maintenance, although custodial surveillance and maintenance programs are planned.

1.2 PROPOSED EPA GROUNDWATER PROTECTION STANDARDS

The groundwater protection standards for the UMTRA Project, as originally promulgated in 1983 by the EPA, provided for a site-by-site approach to developing appropriate measures to control seepage releases from the disposal cells and for determining the extent to which groundwater quality was affected by the remedial works. In response to a remand of the original groundwater protection standards by the U.S. Tenth Circuit Court of Appeals in 1985, the EPA published proposed groundwater protection standards on September 24, 1987, that set general standards applicable to all UMTRA Project sites. Appendix A is a detailed description of the legislative history and requirements of the EPA standards relevant to this report. The U.S. Department of Energy (DOE) adopted a policy that, pending publication of the final groundwater protection standards, the DOE would comply with the standards as they pertain to disposal cell designs, and would accordingly proceed to prepare and implement appropriate remedial action plans. This report is written to document work done by the DOE in response to the proposed EPA groundwater protection standards, to describe changes in the design of disposal cells, and to discuss the groundwater compliance strategies adopted for the various UMTRA Project sites.

The proposed EPA groundwater protection standards require protection of human health, safety, and the environment; consideration of radiological and non-radiological hazards; and consistency with the requirements of the Resource Conservation and Recovery Act (RCRA), as amended. In particular, the proposed EPA groundwater protection standards require that the disposal cell be designed to limit seepage to ensure that the RCRA maximum concentration limits (MCLs), background limits, or alternate concentration limits (ACLs) are achieved in the groundwater at a point of compliance (generally at the downgradient toe of the facility).

The proposed EPA groundwater protection standards also provide for the application of supplemental standards. For example, if the groundwater at a site is Class III (essentially not a viable source of drinking water), supplemental standards also are applicable.

000010

The final EPA groundwater protection standards are likely to be promulgated early in 1989. It is not known if they will be the same or different from the proposed standards. The DOE, in accordance with its stated policy, is proceeding on the basis of the proposed standards, and will make any adjustments necessary to changes in the final standards.

1.3 PURPOSE OF THIS REPORT

This report is prepared primarily for distribution to parties involved in the UMTRA Project, including the U.S. Nuclear Regulatory Commission (NRC), and states and tribes. The report is intended to describe to them how the DOE has managed and advanced the UMTRA Project in response to the proposed EPA groundwater protection standards. It is intended to record the work done by the DOE since publication of the proposed EPA groundwater protection standards, and to show how the DOE has attempted to respond and react in a positive way to the new requirements that result from the proposed standards.

The states and tribes concur in the site remedial action plans, and the states pay a percentage of the cost of final design, site acquisition, and construction. Accordingly, they are concerned about the site-specific remedial action plans, disposal cell designs, and groundwater compliance strategies adopted by the DOE to meet the proposed EPA groundwater protection standards. This report discusses the groundwater compliance strategies now being defined and implemented by the DOE, and details the changes in disposal cell designs that result from studies to evaluate ways to facilitate compliance with the proposed EPA groundwater protection standards.

While this report is intended primarily as a means of communicating progress to the involved agencies, it also serves to record the technical advances, planning, and progress made on the UMTRA Project since the appearance of the proposed EPA groundwater protection standards. The report details the many ideas and design possibilities that have been explored in depth by the technical staff involved in the UMTRA Project. In this regard, the report serves to establish, document, and disseminate technical approaches and engineering and groundwater information to people who may be interested or involved in similar or related projects.

1.4 DOE POLICY ON COMPLIANCE WITH PROPOSED EPA GROUNDWATER PROTECTION STANDARDS

Upon publication of the proposed EPA groundwater protection standards, the DOE adopted a policy of complying with the standards as they affect disposal cell design and the construction of remedial works. Compliance with those parts of the standards leading to possible groundwater restoration is postponed until promulgation of the final standards. The specific text of the DOE policy statements is provided as the Executive Summary of this report. The following is the heart of the policy statement:

The DOE supports the intent of the standards to protect human health and the environment. Because the final groundwater protection standards are not likely to be published until spring 1989, the DOE, in order to proceed with the UMTRA Project, adopted and is working in accordance with the following interim policy statement:

During the period prior to promulgation of the final standards, the DOE intends to comply with Subparts A and C of the proposed groundwater protection standards as they apply to disposal sites. The provisions of Subparts B and C as they apply to groundwater remediation will be complied with following promulgation of the final standards.

Publication of the proposed EPA groundwater protection standards in 1987 created a need to reevaluate both the performance of previous UMTRA Project disposal cell designs and the extent to which these designs facilitated or led to compliance with the proposed standards.

In this report, the term "groundwater compliance strategy" refers to whether MCLs, background levels, ACLs, or supplemental standards are the approach that forms the basis of the site disposal cell design and remedial action plan. (In that background concentration levels are a part of the MCL approach, in the remainder of this report a reference to the term MCL is taken to include reference to the possibility of applying background levels if they exceed the regulated MCLs.) We emphasize that it is the intent of the DOE in complying with the proposed standards to achieve MCLs as the first, preferred, and design strategy for groundwater compliance for disposal cells and remedial action plans. This is to be done, as described in detail in this report, by designing and constructing covers that limit or control the water flux from stabilized piles to very low amounts. Accordingly, while not a standard or design criterion in terms of the EPA standards a very low permeability cover is a prime design objective of the DOE approach to UMTRA Project disposal cell design.

At several sites, the groundwater may be of such low quality, or so difficult to extract in usable amounts, that supplemental standards are applicable and therefore become the appropriate compliance strategy. Alternate concentration limits are to be used only if MCLs, background levels, or supplemental standards are neither achievable nor appropriate.

This report concentrates on Subpart A compliance. The emphasis reflects the DOE concentration of effort on disposal cell design and construction. The DOE has done limited investigation and planning for Subpart B compliance, and this work is briefly referred to in the body of the report and discussed specifically in Section 17.0.

1.5 LAYOUT OF THE REPORT

This report first (in Section 2.0) describes the design of UMTRA Project disposal cells and the approach to groundwater compliance adopted on the project before publication of the proposed EPA

000012

groundwater protection standards. With publication of the proposed standards, the DOE undertook a series of special studies to evaluate technologies that would enhance and facilitate compliance with the proposed standards. Accordingly, this report proceeds (in Section 3.0) to describe the special studies that were completed to identify alternative designs and materials, and to establish remedial action plans and groundwater compliance strategies that will enable the DOE to comply with the proposed EPA groundwater protection standards.

Concurrent with the completion of the studies, the DOE reevaluated approaches to identifying appropriate remedial action plans (e.g., stabilization of tailings on the site or relocation to a new site), disposal cell design criteria, and the strategies to be adopted to comply with the proposed standards (e.g., whether MCLs or supplemental standards are applicable). Section 4.0 describes the remedial action plan approaches and disposal cell design criteria identified and adopted by the DOE. In order to design and justify the design of disposal cells, the DOE formulated the checklist design approach. The checklist cell and cover design approach provides the designer and reviewer with guidance on the range of possible details that could be implemented at specific sites to construct facilities that lead to compliance with the proposed standards. Section 5.0 describes the checklist design approach, Section 6.0 describes checklist cell designs, Section 7.0 describes checklist perimeter dike details, and Section 8.0 describes checklist covers.

In order to construct covers that limit infiltration to the extent required to reduce downgradient groundwater contaminant concentrations to the proposed EPA standards, it is necessary, at certain sites, to incorporate very low permeability infiltration barriers and vegetated soil topslopes. Section 9.0 describes the design and use of very low permeability infiltration barriers, of which bentonite is the primary low hydraulic conductivity element. Section 10.0 describes technical approaches to the design of soil covers.

Section 11.0 describes covers being designed or used in other programs involving the control of wastes; examples are given of covers for low-level radioactive waste cells and of covers formulated in other countries. This section shows that the approach being adopted by the DOE is as conservative and technologically advanced as covers designed and used by others striving to remediate waste disposal facilities.

Section 12.0 discusses technical approaches to the evaluation of the performance of the covers and cells described in this report and as adopted for UMTRA Project sites by the DOE. Section 13.0 discusses the performance of cells just after construction and before steady state conditions are achieved.

Sections 14.0 and 15.0 discuss the impact of the proposed EPA groundwater protection standards, the results of the special studies, and the reformulation of design approaches on the specific UMTRA Project sites. Section 14.0 deals in a summary way with all sites; Section 15.0 discusses a number of selected sites in detail.

Section 16.0 summarizes the future plans for the UMTRA Project as it moves towards scheduled completion of disposal cell remediation in 1994; Section 17.0 describes the investigation and planning for Subpart B compliance undertaken to date by the DOE.

000014

2.0 TYPICAL DISPOSAL CELL DESIGNS BEFORE THE STANDARDS

Figure 2.1 shows a typical UMTRA Project disposal cell design formulated prior to publication of the proposed EPA groundwater protection standards. The cover consists of a radon barrier of compacted clay and silt, a bedding layer of sand, and an erosion barrier of durable rock. Infiltration control is achieved by the radon barrier, made of low permeability materials that inhibit significant infiltration. The cover design is similar to that constructed at Shiprock, New Mexico; Clive, Utah; and Cannonsburg, Pennsylvania (where soil and vegetation were established for aesthetic reasons on the pile). It is also similar to that planned for Ambrosia Lake, New Mexico.

At the time of publication of the EPA groundwater protection standards, similar covers and disposal cell layouts to that shown on Figure 2.1 were being considered for most of the remaining UMTRA Project sites. Construction had begun at Lakeview, Oregon, and Durango, Colorado. Designs were complete and construction about to begin at Tuba City, Arizona, and Mexican Hat, Utah. Design was significantly advanced at Grand Junction, Colorado; Belfield and Bowman, North Dakota; Falls City, Texas; Green River, Utah; and Rifle and Slick Rock, Colorado.

Accordingly, the first and most immediate effect of the proposed EPA groundwater protection standards was to raise the urgent question: Are the current designs for the disposal cell, and in particular the cover, adequate for compliance with the new standards? A second question also arose: What is the site groundwater compliance strategy (i.e., can we achieve MCLs), is it necessary to apply for ACLs, or are supplemental standards applicable? To answer these questions, new, but limited, groundwater impact analyses were performed, alternative covers considered, and other cell designs evaluated. A series of special studies were undertaken to assess technologies and design approaches that could facilitate compliance with the standards.

One of the first major consequences of the proposed EPA groundwater protection standards on a previously selected remedial action plan was the decision to relocate the tailings from the Monument Valley, Arizona, site for codisposal with the tailings at the Mexican Hat, Utah, site. Detailed analyses showed that required cell and cover design modifications could increase remedial action costs at Monument Valley to the extent that it is more economical to relocate the tailings than to stabilize them on the site. At Gunnison, Colorado, the proposed standards have also had a significant impact on the decision to relocate the tailings to a new site.

The impact of the proposed standards at other sites has been less dramatic than a revision of the selected disposal site location, but at most sites some (and often major) design modifications and changes in the groundwater compliance approach have resulted. These changes and the reasons for them are discussed in subsequent sections of this report. In addition, the report describes the currently proposed remedial action approach and the groundwater compliance strategy applicable to meeting the EPA groundwater protection standards for each site.

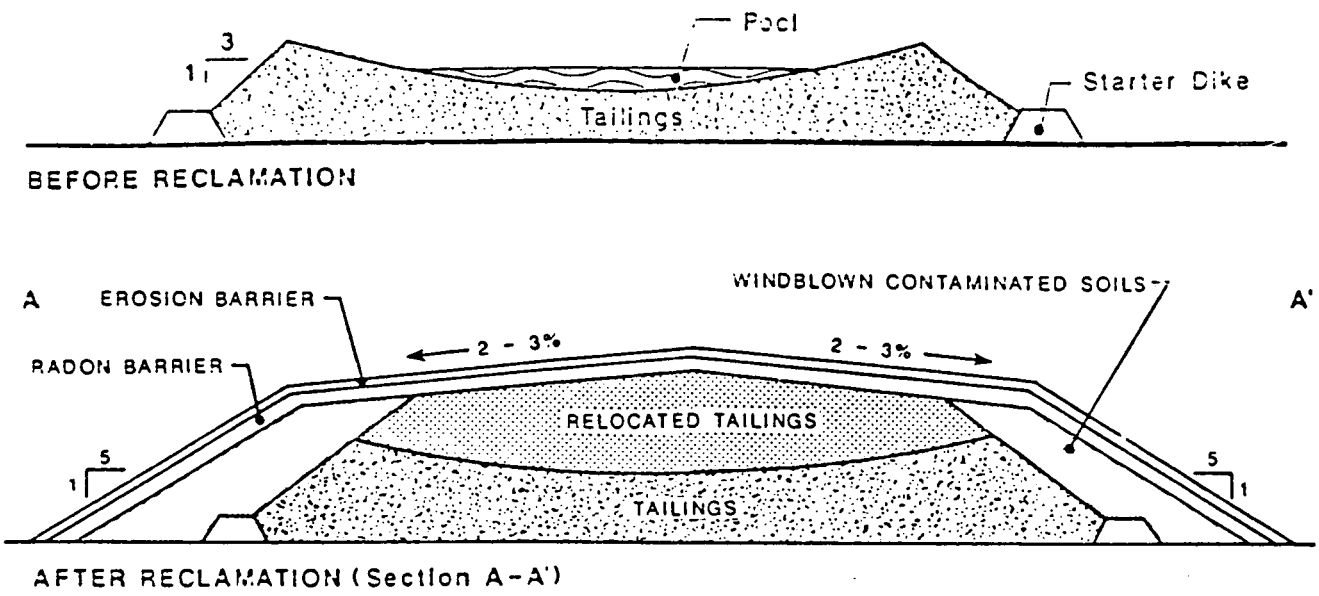

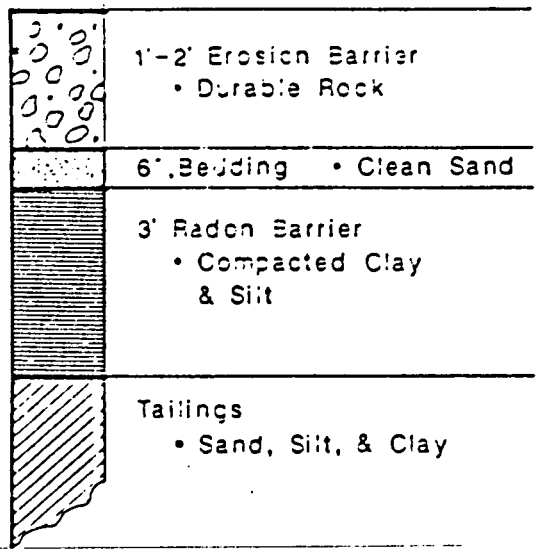

COVER DETAIL

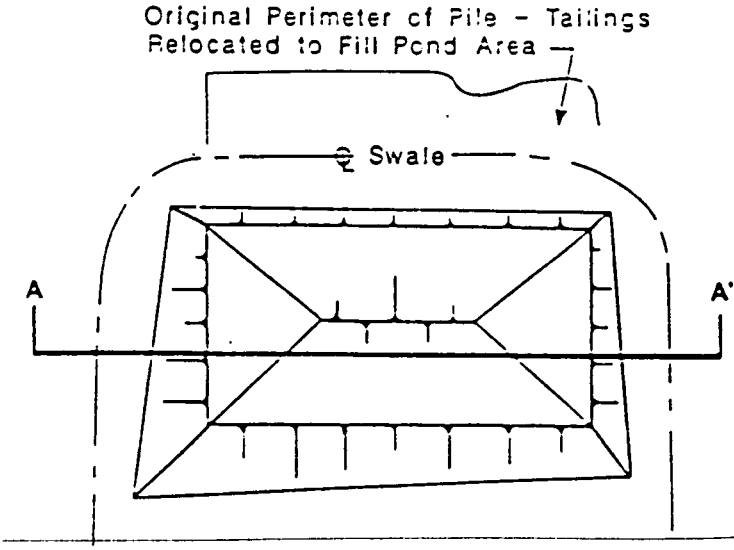

PLAN LAYOUT

FIGURE 2.1
TYPICAL UMTRA PROJECT PILE LAYOUT

000016

3.0 SPECIAL STUDIES

3.1 GENERAL

When the UMTRA Project was first undertaken, a technology development program was organized. The results of the first technology development program were incorporated as standard practice on the UMTRA Project; see the Technical Approach Document (DOE, 1988a). In order to approach compliance with the proposed EPA groundwater protection standards as they affect disposal cell design in an orderly manner, a new technology development program was initiated. This program involved a number of special studies. The following is a discussion of the result of those studies that are relevant to and have impacted revised disposal cell designs. The following discussions are brief summaries of the studies. Complete reports have been prepared on each study, and the interested reader is referred to the individual reports for greater detail (DOE, 1988 c through k).

3.2 GEOMEMBRANES

The special study on geomembranes evaluated the potential use of geomembranes as infiltration barriers in the covers of UMTRA Project disposal cells. The very low hydraulic conductivity (permeability) of geomembranes is well known, and if used, geomembranes could significantly limit infiltration to the tailings, hence limiting the seepage from the cell and the impact of contaminant leachate on the groundwater beneath and downgradient of the disposal facility.

There is evidence, based on observed performance, that geomembranes will last for 20 to 50 years. It is possible to argue rationally on the basis of the observed behavior of installed geomembranes and extrapolation of test data that geomembranes will function satisfactorily for up to 100 years and possibly longer. It is even reasonable to consider that geomembranes may continue to impede infiltration for periods up to and exceeding 200 years. There is, however, no objective data or evidence that geomembranes will perform according to initial design standards and requirements for the 200 to 1,000 year design life of an UMTRA Project pile. Therefore, it was concluded that geomembranes cannot be incorporated into disposal cell covers as permanent infiltration barriers.

3.3 ALTERNATE COVER MATERIALS

The materials listed in Table 3.1 were considered and evaluated as alternate materials for use as infiltration barriers in UMTRA Project disposal cells. The materials were evaluated on the basis of longevity, performance, constructibility, and cost. As shown in the table, only catalytic airblown asphalt and CLAYMAX^{R}, a bentonite layer between two geotextiles, have hydraulic conductivities lower than low permeability compacted soils (possibly amended with bentonite).

Table 3.1 Alternate cover materials[a]

Material	Performance	Longevity	Constructibility	Installed cost ($)
Catalytic airblown asphalt	$K = 10^{-9}$ cm/s	Withstood aging test equivalent to seven years	Applied with a spray bar system	2.60/m^2 [b]
Asphalt-rubber admixture	$K = 10^{-7}$ to 10^{-10} cm/s	Used past 18 years on highways and leaching pads	Applied with a spray bar system	3.35/m^2 [c]
Hydraulic asphalt concrete	Erosion control $K = 10^{-8}$ cm/s	Used on highways since the early 1950's	Hot mix paver	9.20/m^2 [d]
Asphalt emulsion admixture	$K = 10^{-5}$ cm/s	Ongoing field test at Grand Junction, CO, since 1980	Cold mix paver	23.20/m^2 [e]
Fabriform Rayvetmat[R]	Low permeability erosion control	Used past 20 years on reservoirs. Susceptible to cracking due to settlement and freeze/thaw cycling	Grout injected into pre-fab panels	13.50/m^2 [f]
Fiber reinforced gunite	Low permeability erosion control	Used past 20 years on canal linings and embankments. Susceptible to cracking due to freeze/thaw cycles and settlements	Applied with a spray	13.50/m^2 [g]
Latex modified concrete	Low permeability erosion control	Used past 30 years on bridges and parking decks	Applied like ordinary portland cement	30.00/m^2 [h]
Claymax[R]	$K = 10^{-9}$ cm/s	Used on landfill covers since March 1986	Rolled out into place, no fasteners required	6.20/m^2

[a] cm/s = centimeters per second; m^2 = square meters; K = hydraulic conductivity.
[b] Cost assumes field thickness of 0.9 cm (1983 cost).
[c] Cost assumes field thickness of 0.6 cm and includes MC250 primer coat (1988 cost).
[d] Cost assumes field thickness of 10 cm (1983 cost).
[e] Cost assumes field thickness of 6 cm (1981 cost).
[f] Cost assumes field thickness of 10 cm (1988 cost).
[g] Cost assumes field thickness of 8 cm and includes 10" x 10" wire mesh reinforcement (1988 cost).

None of the materials evaluated has proven longevity. The operative element of CLAYMAX is, however, bentonite, which is a natural clay that is unlikely to change in the environments encountered in the covers of UMTRA Project piles. Thus, attention was concentrated on CLAYMAX. It is easy to install and relatively inexpensive, as shown on Table 3.1. For these reasons the material was recommended as a potential infiltration barrier on disposal cell covers.

It is important to note that the bentonite in the CLAYMAX is the infiltration barrier element. The geotextiles are there to facilitate transport and installation. They will deteriorate with time, and cannot be relied on as a permanent design element of a cover.

In theory, although it might be somewhat difficult to construct, a layer of bentonite could be incorporated into the cover by (a) placing a geotextile on the radon barrier, (b) spreading a layer of bentonite about two to six inches thick on the geotextile, (c) placing a second geotextile on the bentonite, and (d) covering the second geotextile carefully with the drain layer. Such an approach could become necessary either because CLAYMAX may be too expensive, or because a greater thickness of bentonite may be required to control the increased saturated flux that might result due to the buildup of water above the infiltration barrier, which is necessary to sustain lateral flow in the drain. Another, as yet untested, way to provide a low permeability layer of bentonite is to amend silts or clays with large percentages (more than twenty percent) of bentonite. See Section 9.0 for a more detailed discussion of low permeability infiltration barriers.

3.4 ALTERNATE COVER DESIGNS

In the study of alternate cover designs, the following alternate cover designs or cover component design enhancements were evaluated, and accepted or rejected for the reasons noted:

- Rock/soil matrix: The top cover component would be a mixture of soil and rock; the rock to control erosion, and the soil to support vegetation, which increases evapotranspiration and thus reduces infiltration. In order to function adequately as an erosion barrier, the rock particles should be in particle-to-particle contact. Therefore, at least 70 percent of the layer would have to be rock. Conversely, to support an adequate vegetation community, about 70 percent of the layer would have to be soil. Because of this grading incompatibility, the proposal for a rock/soil matrix was rejected as an effective way to reduce infiltration. At the Lakeview, Oregon, site, rock/soil is used to improve the aesthetics of the pile.

- Corrugated cover: Figure 3.1 shows the details of a corrugated cover. It incorporates a series of troughs and ridges parallel to the slope of the cover. The aim is to shed water off the steep slopes of the ridges as rapidly as possible, thereby reducing infiltration. By directing the runoff into the troughs and

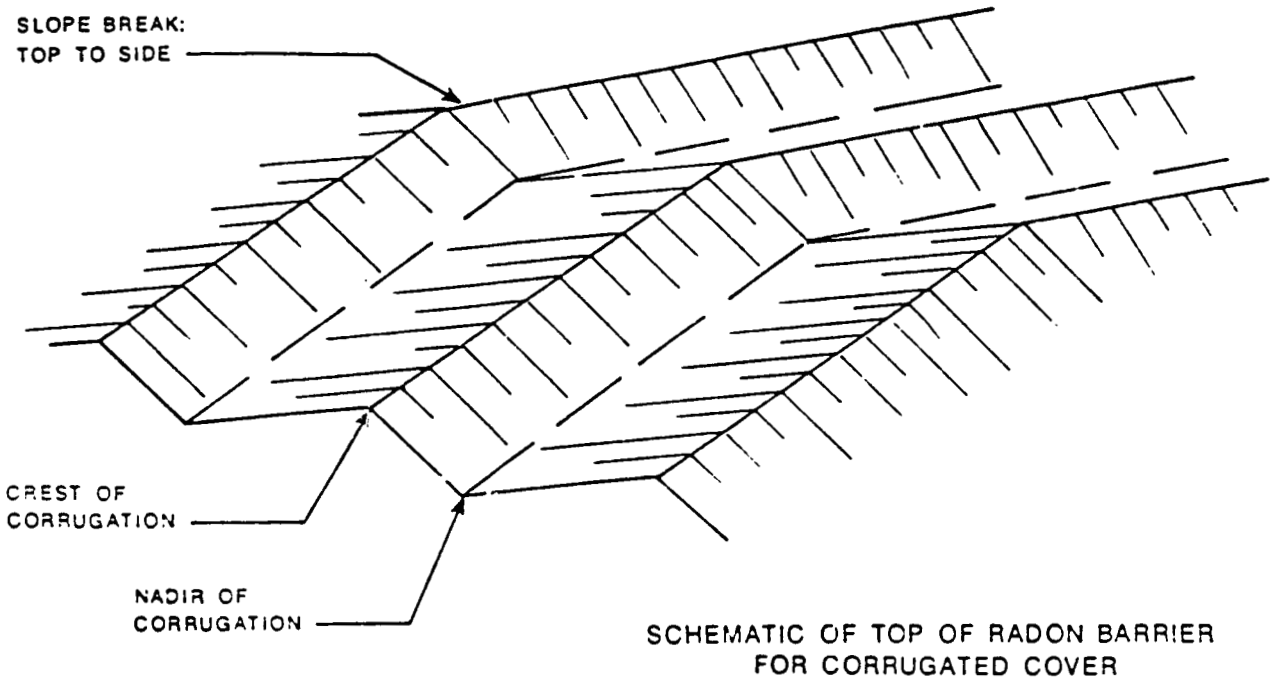

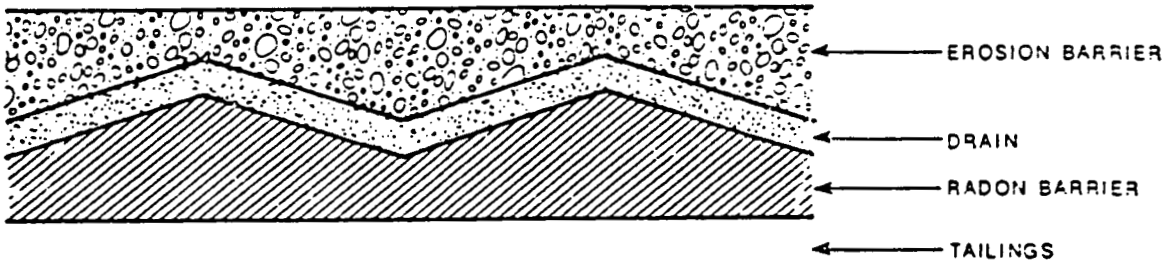

FIGURE 3.1
THE CORRUGATED COVER

000020

concentrating flow off the pile in rock drains at the nadir of the trough, the potential for infiltration is further reduced. The performance of such a cover was evaluated with the computer code which analyzes flow off and through covers such as that shown in Figure 2.1. The model predicted that the travel time down the ridges would be fast enough to result in partially saturated flow through the infiltration barrier; about sixty percent of the total pile top surface was thus subject to the reduced infiltration associated with partially saturated flow. By contrast, the trough lengths and geometry in a typical pile are likely to be such that travel time and water residence time are on the order of several days, so saturated flow conditions are predicted. Because the infiltration would not be significantly reduced over that of the standard cover and the estimated cost of construction was high, corrugated covers have not been further analyzed.

- Capillary break: Figures 3.2 and 3.3 show two configurations in which a capillary break may be used in the cover of a disposal cell to limit infiltration. A capillary break operates in the following way: water will not seep downward from fine to coarser-grained material if the relative gradation of the two materials, and in particular the fine gradation of the overlying material, is sufficient to sustain negative water pressures. The system fails when the overlying material becomes saturated and the water pressure becomes positive. Field tests show that lateral flow can occur for about 25 feet at a slope of about ten percent before the overlying soil saturates and breakthrough occurs. Because of the limited length of efficacy of a capillary break, the configuration shown in Figure 3.3 is not feasible for UMTRA Project piles. Use of a capillary break with a corrugated cover was accordingly considered. This system, however, is characterized by the same disadvantages as a conventional corrugated cover, and is therefore unlikely to find use on the UMTRA Project.

- High permeability drain: In order to reduce the infiltration to the piles, it is necessary to reduce the time the water flows on the pile by increasing the surface runoff rate. Increasing the runoff rate can be accomplished by one of the following ways: increase the hydraulic conductivity of the drain above the infiltration barrier; increase the slope or inclination of the top of the pile; or decrease the slope length. For a practical pile geometry, the topslope and the slope length cannot be varied by more than a factor of two to three. By comparison, the hydraulic conductivity of a drain material can readily be increased one or more orders of magnitude simply by selecting the right sand--a clean sand to fine gravel. For this reason, the special study on using a high permeability drain was performed to evaluate the relationship between increased hydraulic conductivity and infiltration.

The effect of various pile design details on the infiltration into the Durango and Green River cells was examined. The parameters that varied for each site in this evaluation were:

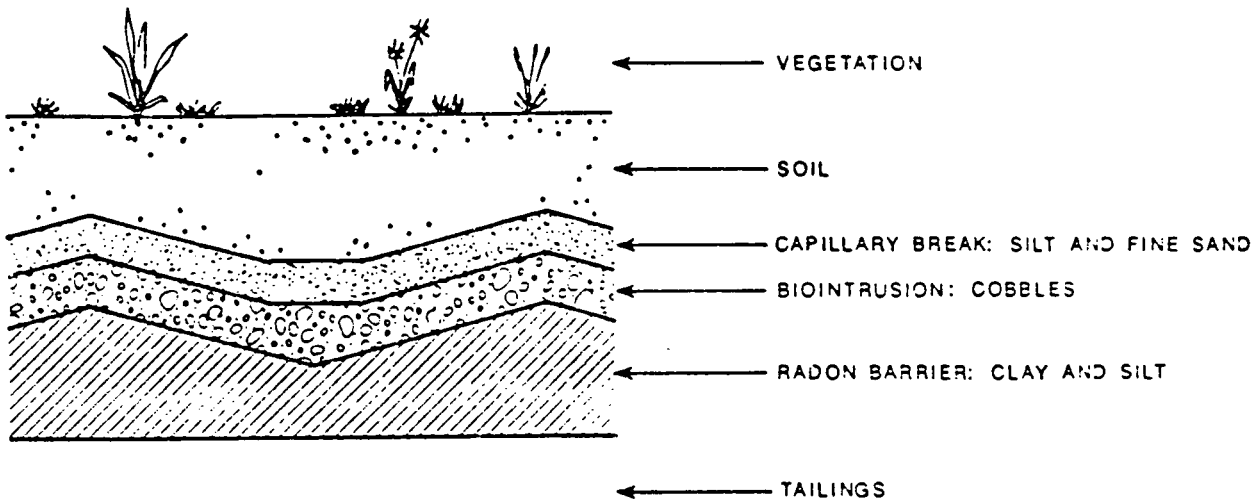

FIGURE 3.2
CAPILLARY BREAK WITH CORRUGATED COVER

000022

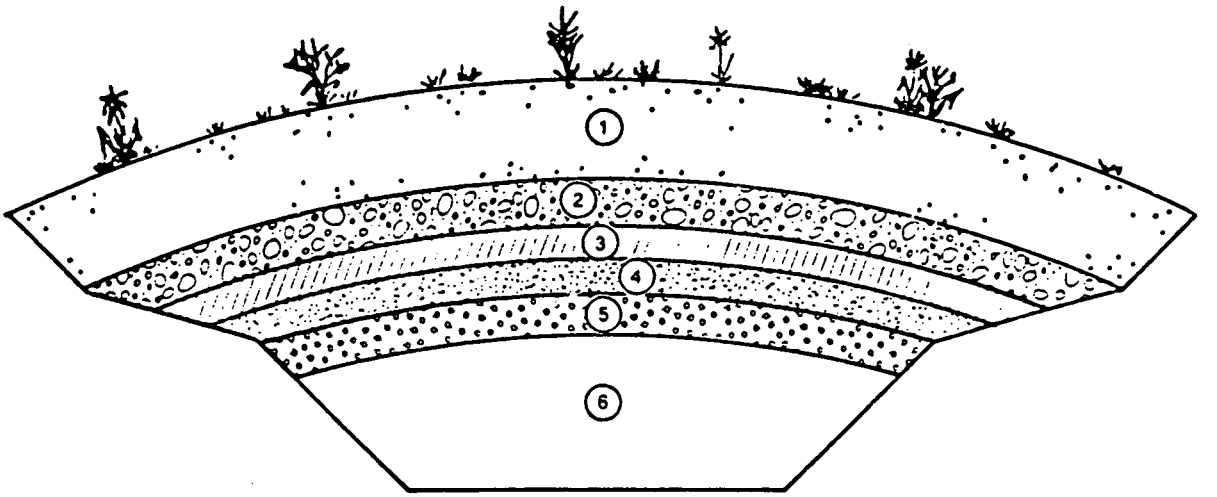

1. SOIL AND VEGETATION
2. DRAIN: COBBLES
3. INFILTRATION BARRIER: CLAY
4. CAPILLARY BREAK: SILT & FINE SAND
5. CAPILLARY BREAK: GRAVEL
6. ENCAPSULATED MATERIALS

FIGURE 3.3
CAPILLARY BREAK OVER NARROW DISPOSAL TRENCH

slope length, slope inclination, and hydraulic conductivity of the bedding layer. Because two different sites were evaluated, it was possible to assess the influence of different climates on the infiltration.

The infiltration for a range of slope lengths, slope angles, and bedding permeabilities at each site was calculated. For a given infiltration barrier's hydraulic conductivity, predicted infiltration into the cell depends primarily on the number of days that water is available on the top of the infiltration barrier. A day in which water is available is termed a ponding day; the number of ponding days is a function of the slope geometry, bedding permeability, and site climate.

In order to present the results of the numerous model runs, the effect of various slope geometries and bedding permeability were combined into a single parameter--runoff time. Runoff time is independent of the site climate; it represents the length of time for water from a single precipitation event to flow off the pile. Figure 3.4 shows the runoff time as a function of drain permeability and slope inclination. Figure 3.5 shows net infiltration per year as a function of runoff time. In order to obtain a specific value for runoff time, a set of basic parameters (slope length and inclination) and a bedding hydraulic conductivity were chosen. For the specified set of parameters, a computer code was used to calculate the runoff time and the net annual infiltration.

As shown in Figure 3.5, the annual infiltration is significantly affected by the runoff time. For both sites, the infiltration barrier hydraulic conductivity was 1×10^{-7} centimeters per second (cm/s). If saturated flow conditions prevail the entire year and the seepage gradient is unity, the infiltration is 3.15 cm. For long runoff periods (such as greater than 200 hours for Durango) water is predicted to build up in the bedding layer over the infiltration barrier, hence increasing the gradient and the annual infiltration above 3.15 centimeters per year (cm/yr).

In order to ensure that the bedding layer is freely draining and the runoff time is as short as possible, the bedding layer materials should be as permeable as possible, preferably no less than 0.1 cm/s. Ideally, the drain material grain size distribution should have no more than 15 percent (D_{15}) of the materials smaller than 2.0 millimeters (mm). A D_{15} of 2.0 mm results in a hydraulic conductivity of approximately 1.5 cm/s. The drain material gradation should also meet the filter criteria for the underlying radon barrier. This recommendation may add to the cost of the bedding layer because of the need to eliminate the finer grain sizes of the borrow materials, which previously could have been left in. In most cases these cost increases should not be significant.

000024

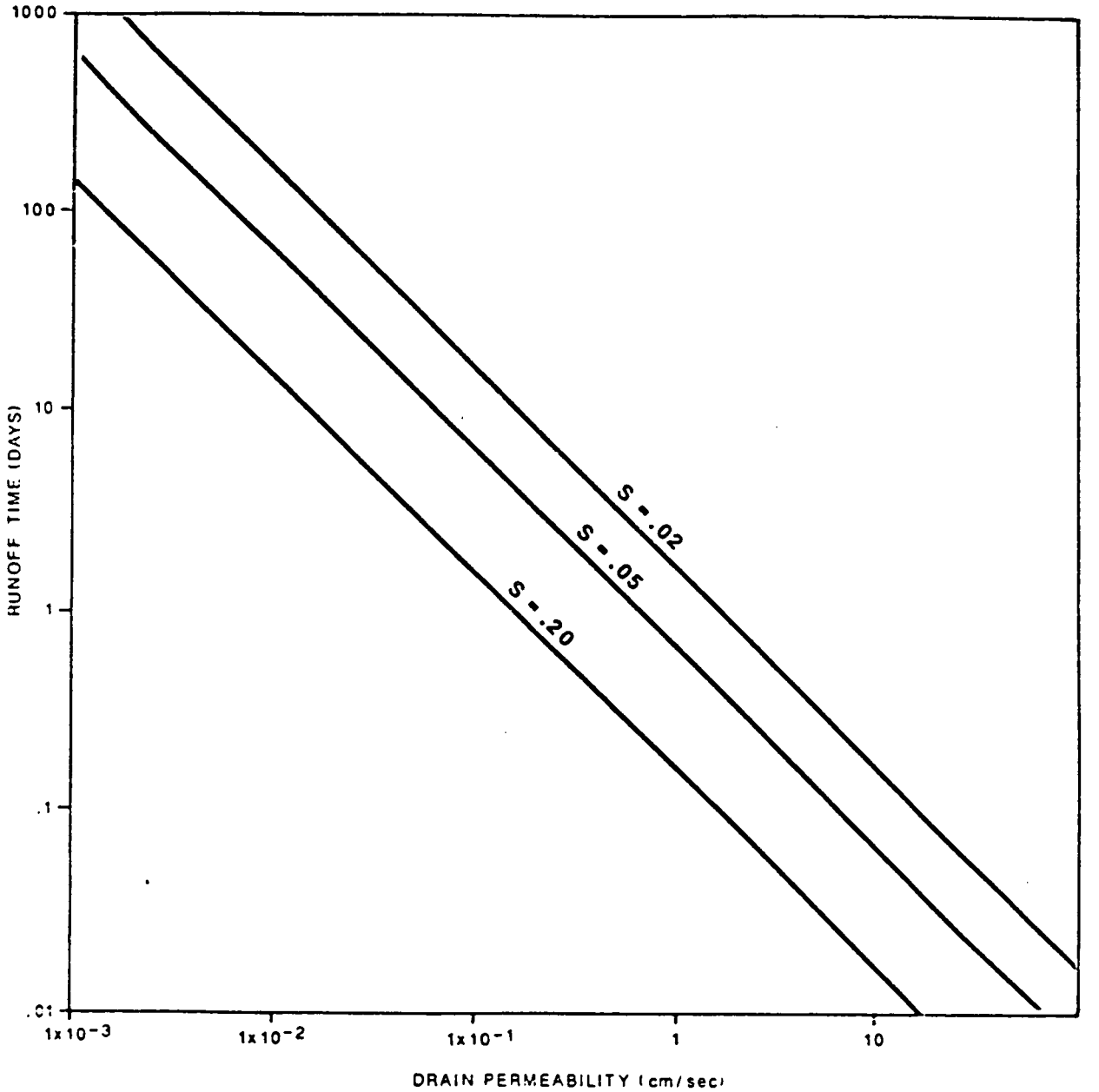

S = SLOPE INCLINATION IN FT./FT.

SLOPE DISTANCE = 300 FT.

POROSITY (n) = 0.3

FIGURE 3.4
DRAIN PERMEABILITY versus RUNOFF TIME

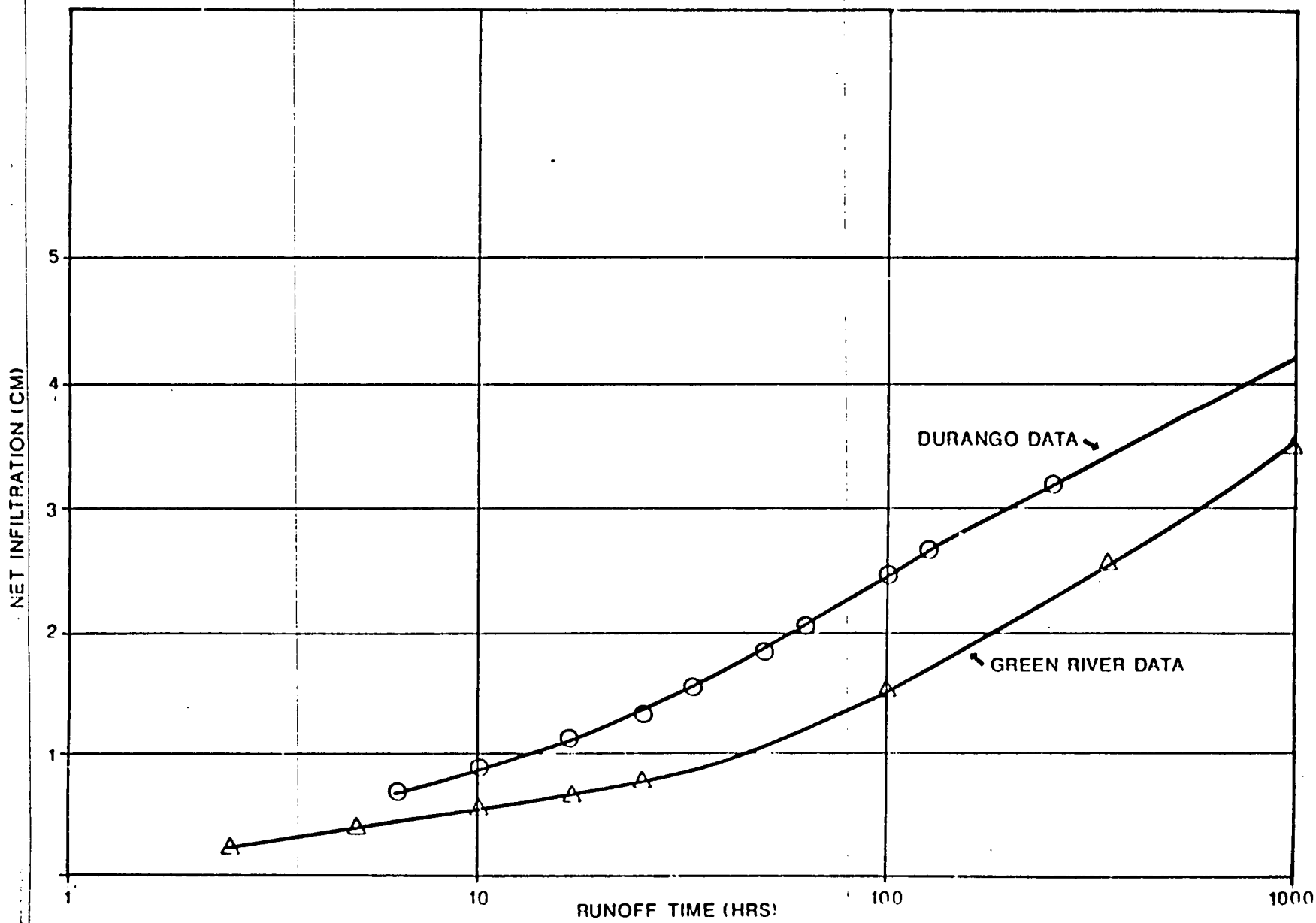

FIGURE 3.5
INFILTRATION versus RUNOFF TIME

3.5 FREEZE/THAW

The effect of repeated freezing and thawing on the hydraulic conductivity of the soil of a saturated infiltration barrier was measured in another special study. Generally, two to four cycles of freezing and thawing will increase the hydraulic conductivity of a saturated clay soil by one to two orders of magnitude. As this increase in hydraulic conductivity will be unacceptable at most UMTRA Project piles, the decision has been made to place all potentially saturated infiltration barriers beneath the depth of predicted frost penetration. A computer code to calculate site-specific frost penetration depths has been created.

No tests to quantify the effect, if any, of freezing and thawing on partially saturated soils have been done. It is believed that the effect will be small, but the cumulative effect over 1,000 years of repeated freezing and thawing of a partially saturated soil could affect the partially saturated hydraulic conductivity of an infiltration barrier. The magnitude of the effect will depend on the number of cycles of freezing and thawing, the moisture content at freezing, the availability of free water, and the soil gradation. In particular, if (a) the infiltration barrier soil is predicted to be unsaturated, (b) the unsaturated hydraulic conductivity is the design infiltration parameter, and (c) the degree of saturation of the infiltration barrier is high, perhaps about eighty percent, then care should be taken to protect the partially saturated infiltration barrier against the effects of freezing and thawing. There are no data on the relationship between the degree of saturation of a soil, the number of cycles of freezing and thawing, or the consequential change in hydraulic conductivity; therefore, conservatism is warranted. Accordingly, at least one layer of appropriately compacted infiltration barrier should be beneath the predicted depth of frost penetration, both for saturated and unsaturated covers.

3.6 VEGETATED COVERS

Vegetation has established naturally on the Shiprock, New Mexico, pile, even though vegetation was not a planned part of the remedial action. It may be concluded that vegetation will establish naturally on most UMTRA Project piles in moderate climates, even through thick rock erosion barriers (up to 18 inches). It is well known that vegetation enhances evapotranspiration; therefore, it is reasonable to utilize this beneficial aspect of vegetation to reduce potential infiltration to a pile. A layer of random material may be required to protect the infiltration barrier against the effects of freezing and thawing; this layer can double as a soil to support vegetation. The special study on vegetation considered the appropriate design procedures for the use of soil and vegetation; as the decision is to use vegetation at a number of UMTRA Project piles to limit infiltration, the design of covers incorporating vegetation is discussed in greater detail in a later section.

The study evaluated the results of research on vegetated covers at DOE facilities such as Los Alamos National Laboratory, Idaho National Engineering Laboratory, and the Hanford Reservation for application to UMTRA Project piles. Design concepts were identified that enhance the covers' ability to store and transpire moisture rather than allowing drainage and contaminant transport. Approaches were also identified for resisting biointrusion. An appropriate approach is the use of a buried layer of loose cobbles to impede roots and burrowing animals and thereby protect the radon barrier.

The special study evaluated the pattern of volunteer plant growth on the Shiprock pile. Shallow-rooting herbaceous plants are growing at the periphery of the topslope and on the sideslope; this indicates that moisture is available in the filter layer and surficial portions of the radon barrier. Germination of the plants was probably enhanced by fines in the erosion riprap and filter at certain parts of the pile. Plants are absent near the crest, where evaporation apparently results in episodic desiccation of the filter layer and surficial radon barrier. The most significant concern at the Shiprock site is the 12 saltcedars on the north-facing sideslope. Roots of these perennial phreatophytes extend more than a foot into the radon barrier. The moisture in the radon barrier will probably favor rapid growth and propagation of this species across the surface of the pile. The radon barrier may be damaged by roots unless the plants are routinely removed.

The special study used hydrologic models such as HELP and CREAMS to quantify the long-term water balance maintained by a vegetated cover.

3.7 RADON/INFILTRATION BARRIER MOISTURE CONTENT

The covers of the disposal cells at Burrell (Pennsylvania), Shiprock (New Mexico), and Clive (Utah) consist of a radon barrier of compacted soil, a six inch thick filter layer, and a one foot thick erosion protection layer of riprap. The design saturated hydraulic conductivity of the radon barriers at these sites is about 1×10^{-7} cm/s. The annual precipitation at Shiprock is approximately six inches, at Clive it is five inches, and at Burrell it is 44 inches. The Shiprock facility was completed more than two years ago; Clive is now being completed, although portions of the cover have been in place for about a year; and the Burrell facility has been completed for about a year.

Samples of the radon barrier at these three sites were collected to measure the percent saturation, the relation of the percent saturation to soil tension, and to predict the hydraulic conductivity as a function of the percent saturation in the radon barriers.

A weather station was installed at the Shiprock disposal facility to measure climatic parameters, and unsaturated-zone monitoring equipment was installed to measure moisture contents, soil

000028

tension, temperature, and heat flux in the different components of the cover. Monitoring equipment installed at the Shiprock disposal facility included tensiometers and gypsum blocks, installed at two stations; four neutron-probe access tubes, installed through the cover; and an evaporation pan placed beneath the riprap for several days to measure evaporation through the riprap. Microlysimetry was done in the filter layer to measure evaporation from the filter layer. Figure 3.6 illustrates the instrumentation used at station 1 on the Shiprock facility.

Results of the field studies suggest that the moisture content in the radon barrier ranges from 82 to 86 percent of saturation, which is slightly less than the placement moisture content during construction. Soil tension in the filter layer is relatively high except after saturation related to precipitation. The filter drains or evaporates within a few days of the precipitation and soil tension increases until the next precipitation. At a depth of three inches in the radon barrier, soil tensions respond to the wetting of the filter layer. Generally, there is no response to precipitation in tensiometers deeper than six inches in the radon barrier; this suggests that evaporation is an effective mechanism for removing water from the radon barrier.

Soil tension and moisture content fluctuate near the surface of the radon barrier in response to environmental stresses. The rate and depth of drying following precipitation indicate that evaporation losses may be significant, in spite of the tendency of gravel or cobble surface cover to suppress evaporation by acting as a mulch. To estimate potential evaporation of perched water within the filter, a screened evaporation pan was installed below the cobble layer at the same depth as the filter. During two days of observation, a cumulative loss of four millimeters of water occurred. The measured cumulative evaporation rate is an order of magnitude larger than that attributable to molecular diffusion of water vapor. The experiment illustrates that other factors such as wind speed, riprap thickness and size, and air temperature significantly affect evaporation.

The relationship of hydraulic conductivity to percent saturation is based on an approach that calculates relative hydraulic conductivity from laboratory-measured relationships of percent saturation to soil tension. This approach indicates that the average unsaturated hydraulic conductivities are of the order of 1×10^{-9} cm/s for Shiprock and 1×10^{-13} cm/s for Clive.

The conclusions that may be drawn from the study are:

- The percent saturation in the upper part of the radon barrier responds to meteorological conditions.
- Moisture content profiles are relatively constant with time and depth below the upper portion of the radon barrier.
- The radon barrier at Shiprock will probably not reach saturation in the future.

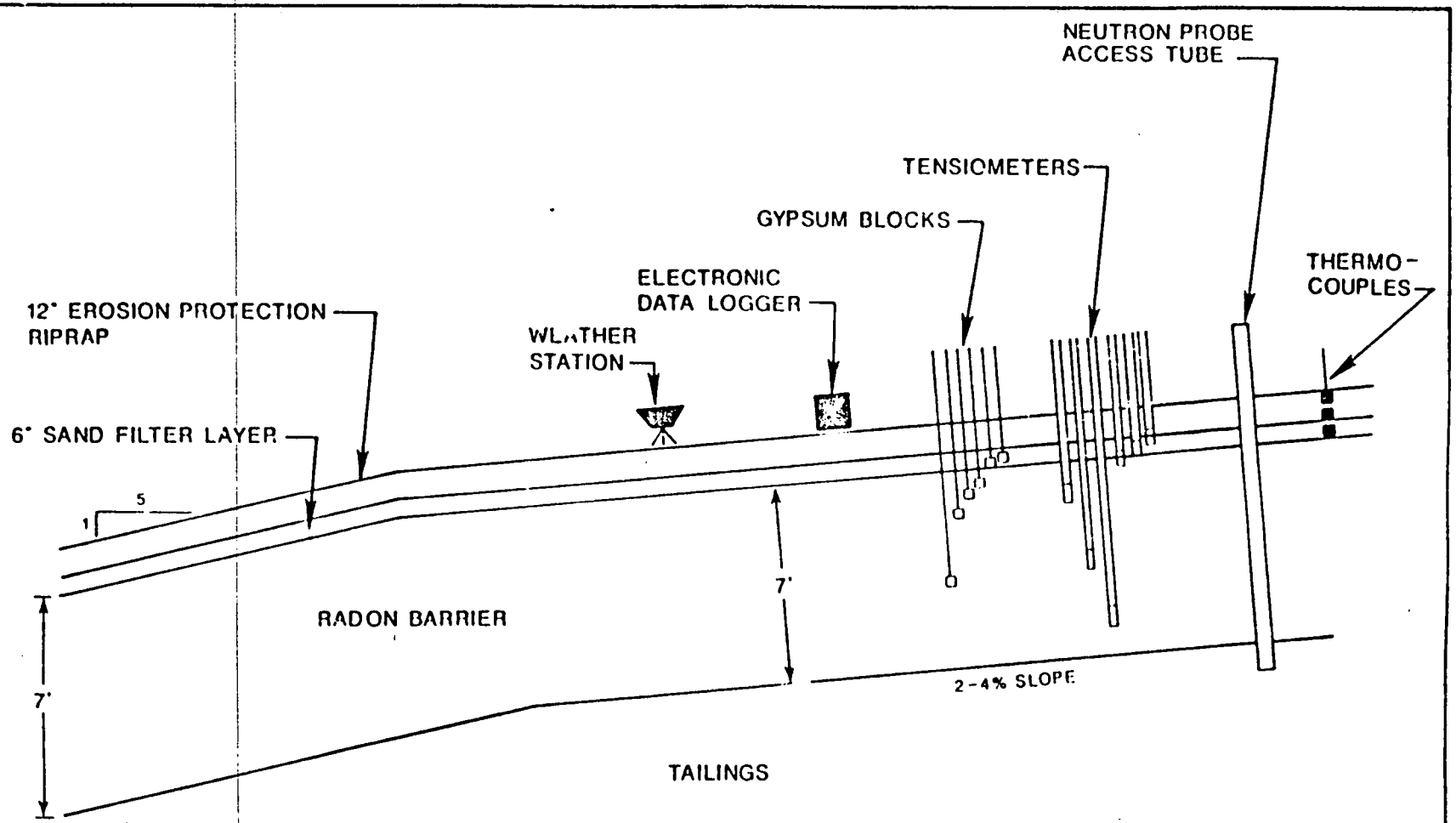

FIGURE 3.6
INSTRUMENTATION AT STATION 1 ON THE SHIPROCK DISPOSAL FACILITY

- The relatively uniform percent saturation throughout the lower part of the radon barrier permits calculation of the water flux through the barrier on the basis that the gradient is unity. This approach yields an unsaturated flux at Shiprock and Clive of approximately $1x10^{-9}$ cm/s or less.

- Field data collected at Shiprock are qualitatively applicable to other UMTRA Project covers at arid sites. An approximation of long-term seepage rates through similar covers in similar climates could be performed using the boundary conditions at Shiprock. This should be verified by post-construction monitoring and modelling.

Measurement of the instruments already installed will continue in order to obtain further data about the long-term behavior of infiltration barriers on piles in arid climates.

3.8 HYDROGEOCHEMISTRY

A special study on hydrogeochemistry investigated the use of geochemical modifiers including calcium carbonate ($CaCO_3$) and calcium hydroxide ($Ca(OH)_2$), and a chemical reducing agent, peat, for treatment of acid-leached tailings. The test data show that neutralizing agents raise the pH of the Gunnison tailings solution from 2.2 to near neutral in batch tests at modifier concentrations from one to five percent. This neutralization results in the precipitation and adsorption of most contaminants identified in the proposed EPA groundwater protection standards. Concentrations of arsenic, cadmium, chromium, lead, selenium, and uranium are reduced by over 98 percent. Molybdenum is removed by $CaCO_3$ and $Ca(OH)_2$ below a pH of 7.0. Concentrations of molybdenum increase at a pH greater than 7.0. Molybdenum forms soluble complexes which are not significantly adsorbed under alkaline pH conditions. These test data indicate that it is most efficient to intimately mix the tailings and the hydrogeochemical modifier during placement of the tailings or place the modifiers at the base of the tailings pile. It is also possible that by placing the geochemical modifiers on the top of the pile, the infiltrating liquids will alter the chemical environment within the pile and cause the retention of contaminants. A geochemical cell placed near the downgradient toe of the stabilized embankment may also remove contaminants from tailings leachate.

Short-term column test results suggest limited kinetic or mass transfer hydrogeochemical modification occurs when tailings seepage water moves through the hydrogeochemical modifier. Decreases in contaminant concentrations are not as great as those observed in the batch experiments. Long-term column tests are perhaps more representative of the conditions that will prevail in a disposal cell. These short-term test results suggest that hydrogeochemical modification of seepage from tailings by a distinct hydrogeochemical layer will require a relatively slow transit time for the seepage as it moves through the hydrogeochemical layer.

The strength of the Gunnison tailings in the presence and absence of geochemical modifiers was measured. Consolidated, undrained triaxial tests were run. At low concentrations of geochemical modifiers (less than ten percent by weight) the calcium carbonate additive slightly increased the shear strength of the tailings. Tailings modified with approximately 10 percent modifiers decreased in shear strength.

3.9 SOURCE MODIFICATION

The source modification study is exploring the change in source term concentrations of seepage from the tailings as a function of the volume of flushing liquid and lixiviant passed through the tailings. Column leach tests have been conducted and the resulting liquids are currently being analyzed. Although complete results are not yet available, preliminary data indicate this approach is not practical, it is expensive, and it creates additional wastes such as sludges and liquids that will be difficult if not impossible to dispose of safely.

3.10 AQUIFER RESTORATION/CHARACTERIZATION

The purpose of the study on aquifer restoration and decoupling was to determine if compliance with Subpart A of the proposed EPA groundwater protection standards, completion of disposal cell remedial action works, would preclude or preempt future Subpart B compliance, i.e., aquifer restoration. A second objective was to determine if the construction of disposal cells offered an opportunity to cost-effectively remediate contaminated groundwater at a site at which construction was in progress or planned. The general conclusions of the study were:

- Aquifer restoration is not precluded or preempted by construction activities at UMTRA Project sites. (This is sometimes called the "decoupling issue.")

- While some construction activities (e.g., dewatering during excavation) offer the potential for assisting in groundwater cleanup, this potential is difficult to realize at most sites because of significant geochemical and hydraulic uncertainties. Accordingly, there are no sites at which the DOE plans to begin implementation of Subpart B compliance by attempting aquifer restoration in conjunction with construction of the disposal cell required for Subpart A compliance.

The study did note a potential problem that may be termed the "compliance monitoring issue." The problem is this: How does the DOE instrument a remedial action disposal cell so that it is possible to confirm that the cell is performing as designed, if beneath the pile there is currently groundwater contamination resulting from past waste disposal activities? For example, if the current groundwater contaminant plume is upgradient and at the remediated cell's point of compliance, groundwater quality data from wells at the point of compliance cannot be used to show proper operation of the disposal cell.

000032

The recommended solution is to install water quality and flow quantity monitoring instruments in the cover of the disposal cell and immediately beneath the disposal cell, and not in the zone of existing contamination or at the point of compliance. By measuring the water flux through the cover, and by monitoring water fluxes and quality immediately beneath the cell, the DOE may be able to demonstrate cell behavior and compliance with standards.

3.11 SODIUM-AMENDED RADON BARRIERS

The study on sodium-amended radon barriers evaluated the extent to which the application of sodium to a clay-rich infiltration barrier soil reduces the permeability of the barrier to the level required for groundwater compliance. A high percentage of absorbed sodium on clay particles deflocculates and disperses those particles so that soil pores become too small for ready transmission of water. This is especially true for smectite clays.

The study concluded that amending radon barriers with sodium would reduce the soil hydraulic conductivity to 1×10^{-9} cm/s or less. To achieve the desired permeability, the soil must be high in smectite clays, must have at least 25 percent of the cation exchange sites occupied by sodium ions, and must be low in soluble salts. The resultant dispersion reduces the aggregate stability of the soil, hence loss of porosity, that would remain intact unless new pores were established by the action of roots, burrowing animals, desiccation, or temperature changes. The dispersion would cause clay particles to swell and pore diameters to shrink. This behavior is reversible, and would result in increased permeabilities of the radon barrier if large amounts of soluble salts were introduced, for instance, by seepage of calcic water through an overlying cover of limestone riprap.

Salt water could be used to condition the smectite-rich soils during placement, and to introduce absorbed sodium and soluble salts. After completion of the cover, the permeability of the radon barrier to fresh water (precipitation) would be initially high because of the soluble salts in the clay particles. It would be necessary to flush fresh water through the cover. The fresh water would leach the salts from the radon barrier, greatly reducing its permeability. Saline leachate would be collected by an underlying geomembrane and drains installed beneath the infiltration barrier, and the seepage water would be diverted to a sump. Soluble salts would be removed and the hydraulic conductivity of the radon barrier would be very low by the time the geomembrane failed, leaving behind a stabilized pile with the desired long-term hydraulic conductivity.

The feasibility of a sodium amendment depends in large part on the availability of materials such as smectite clay and salt water. Claymax currently serves the same purpose with fewer potential impediments to feasibility. The use of a sodium amendment remains a reliable method for reducing radon barrier permeability should other methods be unavailable.

3.12 ACLs AND SUPPLEMENTAL STANDARDS

A special study on ACLs and supplemental standards is in progress. This study is intended to address a variety of issues pertaining to ACLs and supplemental standards and their effect on the UMTRA Project. The study seeks to integrate the NRC guidance on ACLs and supplemental standards. The report, which is not yet complete, will discuss and identify information and data needs for such things as hydrogeology, risk assessments, land and water use, and engineering design features. In addition, manpower, planning needs, and costs of obtaining ACLs and supplemental standards will be discussed in the document. Sample ACL and supplemental standard applications will be included in the report.

3.13 FUTURE STUDIES

Work is continuing or planned to continue on the following special studies:

- Flume testing of radon/infiltration barrier erosion: The purpose of this study is to evaluate the potential for erosion of the radon/infiltration barrier when the overlying filter or drain is very coarse. As previously noted, the more permeable the drain material, the faster water is shed from the pile. If the filter or bedding layer could be eliminated, leaving only the erosion protection riprap (which is very permeable) the flow of precipitation off the pile would be very rapid. There is, however, a concern that the rapid flow of water off the pile could erode the soil of the radon/infiltration barrier. This study is undertaken in order to quantify acceptable, non-erosion flow rates of water through riprap off the covers of UMTRA Project proposed standards.

- Additional monitoring of the moisture content distribution in constructed covers: Instruments already installed at sites will continue to be monitored.

- The source term modification study will continue until the complete suite of results is available.

3.14 CONCLUSIONS

The special studies described in this section have had a significant impact on remedial action planning and disposal cell design. Section 14.0 details the impact of the studies at specific sites. A major result of the special studies is the establishment of technical approaches that do and that do not constitute the approach termed "as low as reasonably achievable" (ALARA). If ACLs are applied, the DOE must demonstrate, among other things, that the disposal cell design reduces seepage from the cell and hence contaminant loading to the groundwater to ALARA levels.

000034

The DOE considers that the results of the studies described in this section and the design approaches described in subsequent sections of this report establish a sound basis for identifying technical approaches that do and do not contribute to the attainment of ALARA levels. For example, if a disposal cell is required to limit seepage to ALARA levels, it is not necessary to include geomembranes in the cover. Also, for the reasons discussed in this section, the ALARA concept does not mandate the use of hydrogeochemical barriers or amending infiltration barriers with sodium.

Conversely, achieving ALARA levels does include providing cover drains with as high a permeability as is compatible with radon barrier erosion control. Achieving ALARA levels at certain sites may require the use of CLAYMAX or bentonite amendment of the infiltration barrier.

The philosophy and legal requirement of the ALARA concept demand an integrated assessment of disposal cell site selections, disposal cell layouts, and cover and perimeter dike details, including in particular an evaluation of suitable cover components. This report establishes the necessary basis for the integrated design assessment. This section has established the cover and perimeter dike components that do and do not contribute to ALARA levels, and has documented why certain materials and design details do or do not reduce, control, or alter seepage from the cell.

4.0 REMEDIAL ACTION PLAN CRITERIA AND APPROACHES

4.1 DISPOSAL CELL DESIGN CRITERIA

The EPA standards applicable to the design of UMTRA Project disposal cells and remedial action works establish, in brief, the following design criteria:

- o A design life of 1,000 years to the extent achievable, and at any rate of 200 years.
- o Control of the dispersion of the tailings and contaminated materials and prevention of their use by humans and animals.
- o Minimum reliance on active human maintenance.
- o Control or modification of seepage of contaminants from the disposal facility to the extent required to achieve compliance with the groundwater protection standards.

All design work on the UMTRA Project is done in terms of the UMTRA Project Technical Approach Document (TAD) (DOE, 1988a). This document details the design criteria and approaches to the formulation of disposal facility design. (The current version of the TAD does not incorporate the technical approaches described in this report. The TAD is being updated to describe new technical approaches that the DOE will implement in order to comply with the proposed (and final) EPA groundwater protection standards. Pending publication of the revised TAD, probably after promulgation of the final groundwater protection standards, this report describes the DOE's technical approaches to the proposed groundwater protection standards.)

The criterion that seepage from the cell be controlled is not stated explicitly in the promulgated EPA standards or in the proposed EPA groundwater protection standards. The criterion for control of seepage is derived from the proposed standard that the contaminant concentrations at the point of compliance (a line or plane just downgradient of the disposal cell) not exceed the MCLs specified in the proposed standards. Controlling or limiting seepage from the cell, hence reducing the volume of contaminants reaching the point of compliance, is a practical way to reduce contaminant concentrations to the specified MCLs.

An alternative method to achieve the MCLs is modification of the quality of the seepage water, either by hydrogeochemical additives in the tailings or disposal cell, or by altering the source term by washing or otherwise treating the tailings prior to the placement in the disposal cell. As noted above in the description of the special studies, intimate mixing of geochemical modifiers will be very expensive. The economics of adding geochemical modifiers must be compared to those of placing an enhanced infiltration barrier. Tailings washing would be expensive and would generate sludges with high contaminant concentrations. Institutionally mandated time constraints preclude using natural flushing as a mechanism for

000036

source modification. At this time, control of seepage is the approach adopted for practical implementation in the design of disposal cells, the formulation of groundwater compliance strategies, and the completion of remedial plans to achieve the proposed EPA groundwater protection standards.

Control of seepage is achieved by the cover, which, as described in greater detail in later sections of this report, is designed and constructed to impede and limit infiltration to very low water fluxes--between $1x10^{-7}$ and 1×10^{-9} cm/s. To place these water flux rates in perspective, note that a flux of $1x10^{-7}$ cm/s is equivalent to a depth of water of 3.1 cm (1.2 inches) per year percolating through the cover and tailings. A flux of $1x10^{-9}$ cm/s is equivalent to 0.3 mm (0.01 inches) per year percolating through the cover and from the base of the disposal cell. Such low fluxes can in reality be regarded as essentially zero. Accordingly, while it is not a standard imposed or implied by the proposed EPA groundwater protection standards, the DOE has adopted as an objective, or design criterion, the provision of covers on disposal cells that limit the water flux to approximately $1x10^{-7}$ to $1x10^{-9}$ cm/s or less.

As described in a later section, the DOE does not consider the use of liners to be a practical seepage control approach. If the permeability of the liner must be lower than the permeability of the cover, bentonite will probably have to be incorporated into the liner. A layer of bentonite would seriously compromise the stability of a cell; seepage intercepted by the liner would exit the cell, and this seepage would either have to be treated or discharged to surface waters. Neither of these approaches is considered either technically or legally possible in the context of the EPA standard for longevity and minimum maintenance on the UMTRA Project.

4.2 GROUNDWATER COMPLIANCE STRATEGIES

4.2.1 General

In order to design a disposal cell and its cover for compliance with the groundwater protection standards, the groundwater compliance strategy must be defined. The proposed EPA groundwater protection standards identify three groundwater protection compliance strategies: MCLs, supplemental standards, and ACLS.

4.2.2 Maximum Concentration Limits

Compliance with MCLs is the design objective strategy; i.e., it is preferred to the other two strategies and the DOE intends to strive to achieve MCLs wherever possible. Accordingly, for this compliance strategy, the design criterion for the disposal cell is to limit contaminant releases so that the EPA MCLs, or background levels if background exceeds a particular MCL, are achieved at the point of compliance. As noted previously, this is best achieved by constructing covers that limit seepage to levels as low as reasonably achievable; i.e., about $1x10^{-7}$ to $1x10^{-9}$ cm/s.

Also, as previously noted, MCLs could possibly be achieved by hydrogeochemical modification of the tailings or by installing a liner. For the reasons discussed elsewhere in this report, these alternatives may not be cost-effective or technically or legally feasible.

4.2.3 Supplemental standards

Supplemental standards are an acceptable compliance mechanism when, among other things, the disposal site is located over an aquifer bearing Class III groundwater. Supplemental standards may, as noted in Appendix A, also be applicable because of excessive environmental harm or technical impracticability, and the like. Class III groundwater exists when one or more of the following conditions applies:

- The background total dissolved solids content is greater than 10,000 milligrams per liter (mg/l), or

- There exists widespread ambient contamination that limits the usefulness of the aquifer and this contamination is not a result of milling activities for which the DOE is responsible under the Uranium Mill Tailings Radiation Control Act (PL94-604). Furthermore, this contamination cannot be cleaned up using treatment methods reasonably employed in public water supply systems, or

- The maximum sustained yield from the aquifer is not sufficient to meet the domestic needs of a family of four, i.e., 150 gallons per day.

The disposal cell design need not be ALARA at a disposal site where supplemental standards are allowed. The design should limit seepage from the pile to a degree that is "as close as reasonable under the circumstances" (ACARUC) to applicable groundwater protection standards. The ACARUC concept involves such things as a suitable location, appropriate pile geometry, and a low permeability cover, but not necessarily incorporation of very low permeability elements such as bentonite. In addition to making a reasonable attempt to meet groundwater protection standards, the proposed action should be protective of human health and the environment.

4.2.4 Alternate Concentration Limits

The third groundwater compliance strategy in the proposed EPA groundwater protection standards is ACLs. An ACL may be appropriate if the DOE can demonstrate that the alternate (higher) groundwater contaminant concentrations are protective of human health and the environment and that the limits are ALARA. Further information is provided by Bierley (1988).

000038

4.3 PERFORMANCE ASSESSMENTS

Once the disposal cell design has been formulated and a compliance strategy formulated, a performance evaluation is undertaken and documented for presentation to the NRC. The essential part of the performance evaluation is a written explanation and substantiation of why the disposal cell will perform as designed and, in particular, how it will comply with the EPA standards for longevity, stability, groundwater impact, and minimal maintenance. Technical approaches for performance assessments are discussed in detail in Section 12.0 of this report.

5.0 THE CHECKLIST DESIGN APPROACH

At the same time as the studies described above were in progress, alternate cell and cover designs were being formulated and evaluated. Cell and cover design were reevaluated in response to both the findings of the studies and the pressures and demands associated with site-specific planning and input from reviewers and concurring agencies. The following section describes the general cell and cover designs and design selection approaches formulated; subsequent sections describe the practical implementation of these ideas and approaches.

The cell and cover designs described below are called Checklist Cells, Checklist Perimeter Dikes, and Checklist Covers. These titles are specifically chosen to indicate the true intent and purpose of the design details. They are not the "best." They are not "generic." It has been suggested that they be called ALARA cells and covers. This is valid in the sense that if it is necessary to support ACLs and hence prove that the design complies with ALARA requirements, it would be necessary to examine the checklist details and substantiate why a particular component or detail is not adopted. However, calling them ALARA cells and covers does not imply that they are the designs required for successfully invoking ALARA concepts. They are simply those details that have emerged from the studies and site-specific discussions as being potentially suitable for use and incorporation in disposal cell designs that will lead to compliance with the proposed EPA groundwater protection standards. They are intended to constitute a list of possible cell and perimeter dike details and cover components that should be examined and considered when compiling, for each site, a disposal cell design. In preparing designs, site-specific factors must be taken into account. The checklist details are comprehensive enough to cover all situations likely to be encountered at UMTRA Project sites, but if site-specific factors dictate different details, other appropriate details should be adopted even though they are not to be found in the checklists.

Associated with the checklist cover design is a list of elimination criteria. Examples of cover component elimination criteria are provided in this paper. Thus, the designer may, for each component in the checklist cover, examine the elimination criteria list. If one or more of the elimination criteria is applicable or appropriate to a site, then that particular cover component need not be used.

In practice, selection of the appropriate design should include those details that lead to the lowest achievable seepage, not necessarily to achieve MCLs, or because of the requirement inherent in the ACL approach to reach ALARA levels, but simply because this is an approach consistent with sound and prudent engineering practice.

As noted in an earlier section of this report, the disposal cells at a number of sites had already been constructed or construction was in progress when the proposed EPA groundwater protection standards were issued. For those sites, the checklist design approach is not absolutely applicable.

000030

The designer is constrained by the reality of the current state of design or construction. It may, for example, be impossible to implement any of the perimeter dike details as a result of site size or cell layout constraints. The cover may have already been constructed or the materials produced. In such cases, the checklist details serve only to confirm that the actual design as being constructed is reasonable. In certain cases, as described in the case histories, design details have been altered for sites at which construction is in progress. This was done on the basis of the ideas incorporated into the checklist approach.

An additional use of the checklist approach is for a site at which the DOE may apply for ACLs. Such an application involves providing to the NRC documentation and rationale that the design does achieve the desired end of ALARA concentration limits. By discussing potential applicable checklist details in the ACL application, and by showing that they are not appropriate or implementable, it will be possible to demonstrate to reviewers in a sound and convincing manner that design decisions are correct and in compliance with the proposed standards, regardless of whether the compliance strategy is to use MCLs or ACLs. (See also the discussion in Section 3.14 for a detailed exposition of this philosophy and technical approach.)

6.0 CHECKLIST CELL DESIGNS

Three basic cell designs should be considered for an UMTRA Project disposal cell. These are:

- The typical cell: Figure 2.1 shows the layout and details of the typical cell. It involves placing an appropriate cover over the top and sides of the stabilized embankment, which have been reconfigured to form a suitable shape--usually a pyramid top and relatively flat (five to one) sides and a topslope of two to three percent.

- The constrained cell: As shown in Figure 6.1, the essential feature of such a cell is surrounding dikes of clean, compacted material. This cell design is likely to be appropriate primarily for sites to which the tailings and contaminated materials are relocated. The advantage of this design is that there is no potential for seepage through contaminated material underlying the sideslopes. This may facilitate compliance with the EPA groundwater protection standards at sites where it is necessary to significantly or severely limit the quantity of contaminated seepage from the cell. The disadvantage is that this cell is likely to be the most expensive to construct; the clean material to build the perimeter dikes may be costly to obtain and place. Material for constructing the perimeter dikes may be obtained from an excavation formed before placement of the tailings. Determination of the optimum depth of excavation is based on the nature of the foundation materials and the impact of decreasing the distance between the tailings and the groundwater table. In order to preclude the possibility of backflow of water flowing off the cover over and through the perimeter dikes and hence into the tailings, it will be necessary to provide either an in-cell slope to the dike or to build anistropy into the dike such that flow, is out and away from the tailings and other contaminated materials. The top cover slope and details will be selected by considering the checklist cover described later.

- The buttressed cell: As shown in Figure 6.2, this cell involves buttressing the sideslopes of the in situ tailings pile with clean, compacted material to provide stability. This cell design is likely to be appropriate where tailings are stabilized in place. If the tailings are to be relocated, the design may be used to maximize the cell volume for tailings and contaminated materials. The major constraint on the use of this cell is the need to position the bentonite layer relative to the clean material buttress to provide slope stability. Hydrological calculations should be performed to confirm that infiltration through the low-permeability sideslope layer can be limited to acceptable amounts by placing a drain over the low-permeability element or by the impedance to flow resulting from the presence of the bentonite layer. The topslope cover is selected by considering the Checklist Cover.

Many Title II uranium mill tailings piles are surrounded by earthen dikes or embankments. As noted by Shepherd and Abt (1987), this is the most significant difference between Title I and Title II piles. As described by Miller and Davis (1987), the NRC has accepted a soil cover for the disposal cell at the Ray Point, Texas, Title II site. Soil has been used in the

000012

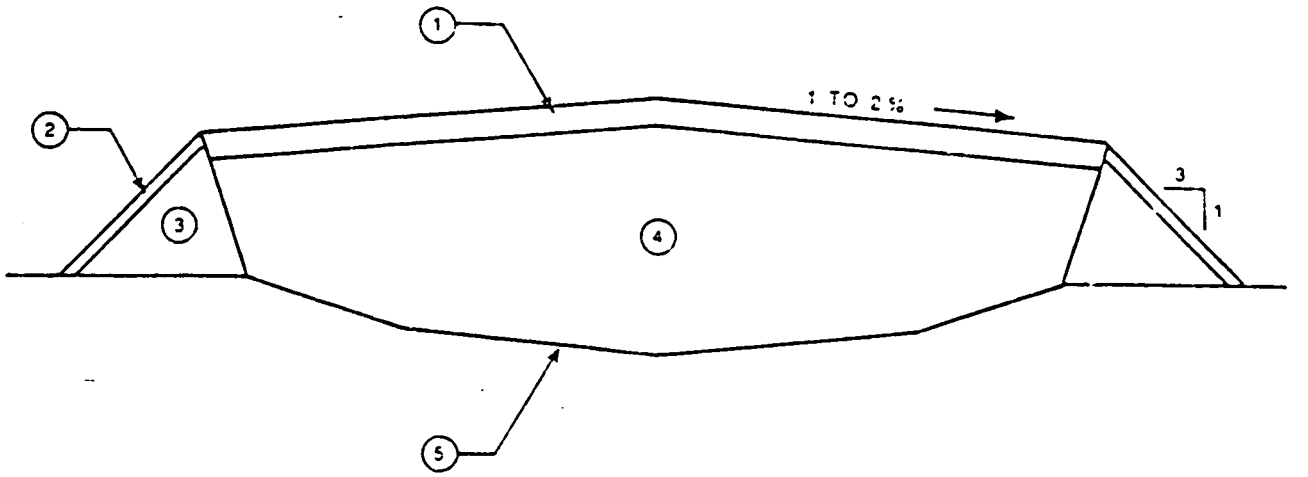

1. TOP COVER: SEE FIGURE 8.1
2. SIDE COVER: EROSION RESISTANT ROCK
3. PERIMETER DIKE: COMPACTED SOIL & ROCK
4. DISPOSAL CELL: TAILINGS & CONTAMINATED MATERIAL
5. BASE: EXCAVATED SOIL

FIGURE 6.1
THE CONSTRAINED CELL

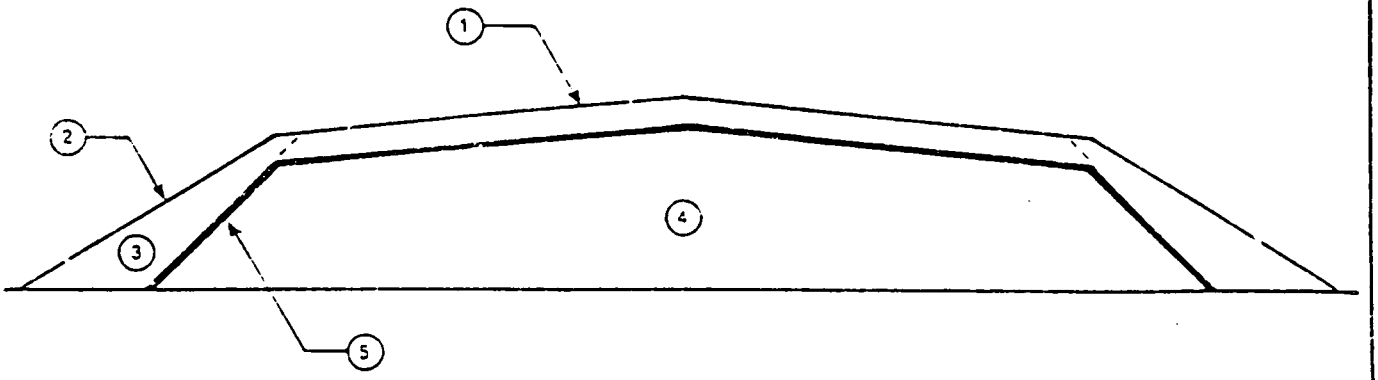

1. TOP COVER: SEE FIGURE 8.1
2. SIDE COVER: EROSION RESISTANT ROCK
3. PERIMETER BERM OR DIKE: CLEAN FILL
4. DISPOSAL CELL: TAILINGS & CONTAMINATED MATERIAL
5. SIDE AND TOP INFILTRATION BARRIER: COMPACTED CLAY, CLAYMAX, GEOMEMBRANE, DRAIN, OR OTHER

FIGURE 6.2

THE BUTTRESSED CELL

000014

remedial action works on both the top and sideslopes. The two most significant design features of the Ray Point pile are shown schematically in Figure 6.3. The top surface is contoured so that all flow is directed away from the steeper sideslopes (not towards and over them as is current UMTRA Project practice). Flow is directed to a broad, shallow swale or topographic low, and the slope from the top of the pile to the surrounding area is gentle. If required, erosion control rock may be placed or base-level features may be constructed in the drainage swale. The NRC has compiled a description of acceptable analytical techniques to assess the performance and substantiate the acceptability of pile layouts such as shown in Figure 6.3. In brief, the designer must show that the precipitation that will fall on the perimeter dike will not cause a gully so deep that it will erode towards the tailings (see Figure 6.4). Also, the designer must show that flow on the topslopes and in the ultimate swale will not cause gully erosion that will impinge into the tailings.

Two other disposal cell "layouts" or remedial action approaches have been identified, and are discussed here for the sake of completeness. The first of these is that adopted for the Monument Valley tailings: i.e., relocate them and place them on top of another pile. A similar approach is being used at the Riverton, Wyoming, site, although there the reason was not the proposed EPA groundwater protection standards. The obvious advantage of colocation is the presence of one rather than two piles, particularly if groundwater conditions at the colocation site are conducive to compliance with the standards. Although there are two UMTRA Project sites at which colocation could be used (Falls City and Ambrosia Lake), this option is unlikely to be used again on the UMTRA Project primarily because of the significant institutional constraints involved in colocating Title I and Title II tailings.

Another possible disposal cell layout listed for completeness is termed the "cigar pile." The tailings and other contaminated materials would be placed into a long, narrow pile oriented perpendicular to the prevailing groundwater flow gradient. In theory, the potential for meeting MCLs is enhanced because the impact of contaminant seepage from the pile is spread over a greater distance and diluted by a greater volume of groundwater seeping beneath the pile. Another advantage of this cell is the relatively short sideslopes, which can be kept steep to increase the rate at which the pile sheds precipitation and thus minimize infiltration. Difficulties in implementing this type of pile include nonuniformity of the groundwater flow gradient over the length of the pile; the increased volume of cover relative to the encapsulated volume; and the absence of topslope where very low permeability elements may be used.

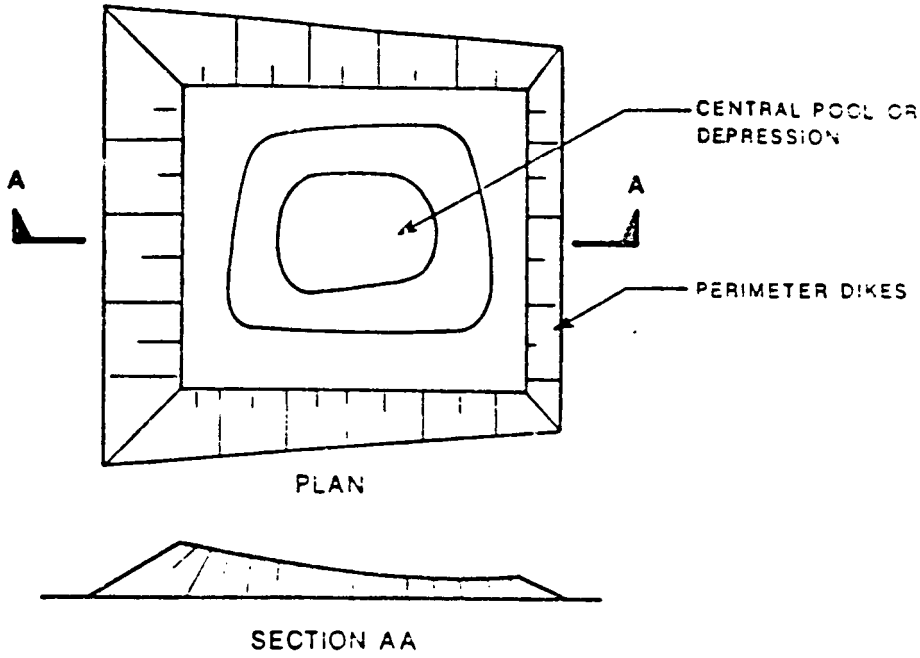

LAYOUT BEFORE REMEDIATION

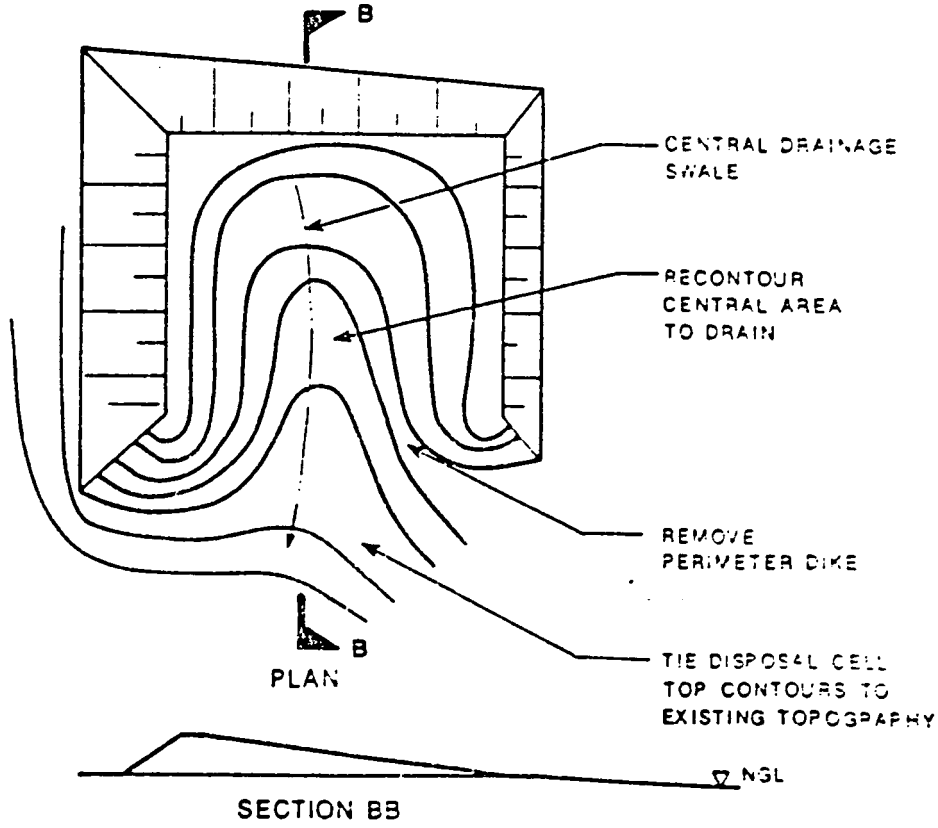

LAYOUT AFTER REMEDIATION

FIGURE 6.3
PERIMETER DIKE REMOVAL DISPOSAL CELL LAYOUT

000016

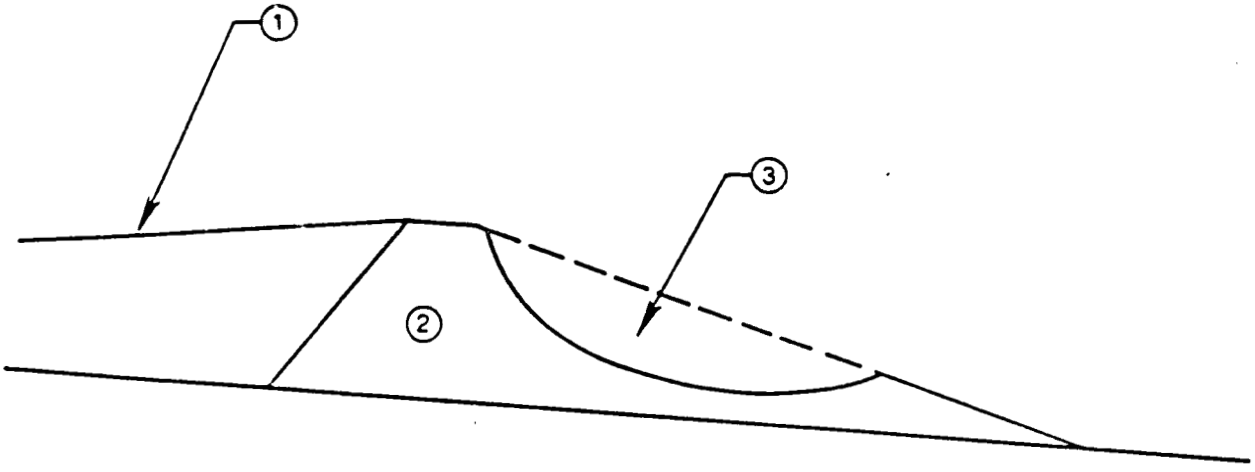

1. TOPSLOPE - GRADE TO DRAIN AWAY FROM PERIMETER DIKE
2. PERIMETER DIKE OF UNCONTAMINATED MATERIAL
3. MAXIMUM CALCULATED GULLY DEVELOPMENT

FIGURE 6.4
PERIMETER DIKE EROSION ASSESSMENT

7.0 CHECKLIST APPROACH TO PERIMETER DIKE DESIGN

7.1 GENERAL

Figure 7.1 shows a number of possible designs for the perimeter dikes of an UMTRA Project disposal cell. To determine the appropriate detail, proceed as follows:

- o Examine possible perimeter dike layouts as shown on Figure 7.1.
- o Evaluate the advantages and disadvantages of alternative perimeter dike details for the specific site.
- o Adopt the appropriate perimeter dike detail, suitably adjusted for site-specific conditions.

7.2 PILE STABILIZATION IN PLACE

The perimeter dike design alternatives shown on Figure 7.1 are categorized on the basis of whether or not the tailings are relocated. For tailings stabilized in place there are three basic design options. The first option, and that currently planned for all UMTRA Project piles that will be stabilized in place, is simply to flatten existing slopes and cover them with an appropriate cover. In theory, any of the cover options derivable from the Checklist Cover (see Section 8.0) could be used. In practice, the best cover on the sideslope is the standard cover, which includes a radon/infiltration barrier, bedding, and riprap for erosion control. The design of the riprap is discussed in detail in the TAD (DOE, 1988), is not affected by the proposed EPA groundwater protection standards, and is not discussed further here. The design of the infiltration barrier to control and limit infiltration is the critical aspect of the sideslope cover performance affected by the proposed groundwater protection standards. Cover performance evaluations are discussed in detail in Section 12.0.

In arid and semiarid climates, with up to nine inches of precipitation per year, the data from the radon barrier moisture content study (see Section 3.7) support the theory that the infiltration barrier on a standard cover sideslope will be partially saturated. In wet climates, such as those with more than fifteen inches of precipitation per year, the sideslope infiltration barrier will probably be saturated. At sites where the annual precipitation is between nine and fifteen inches, the degree of saturation of the sideslope infiltration barrier will probably depend on the details of the topslope cover, as discussed below.

If the topslope cover at a site in an intermediate climate zone incorporates vegetation that sufficiently limits the volume of water entering the cover drain and hence flowing to and over the sideslope infiltration barrier, the infiltration barrier will remain partially

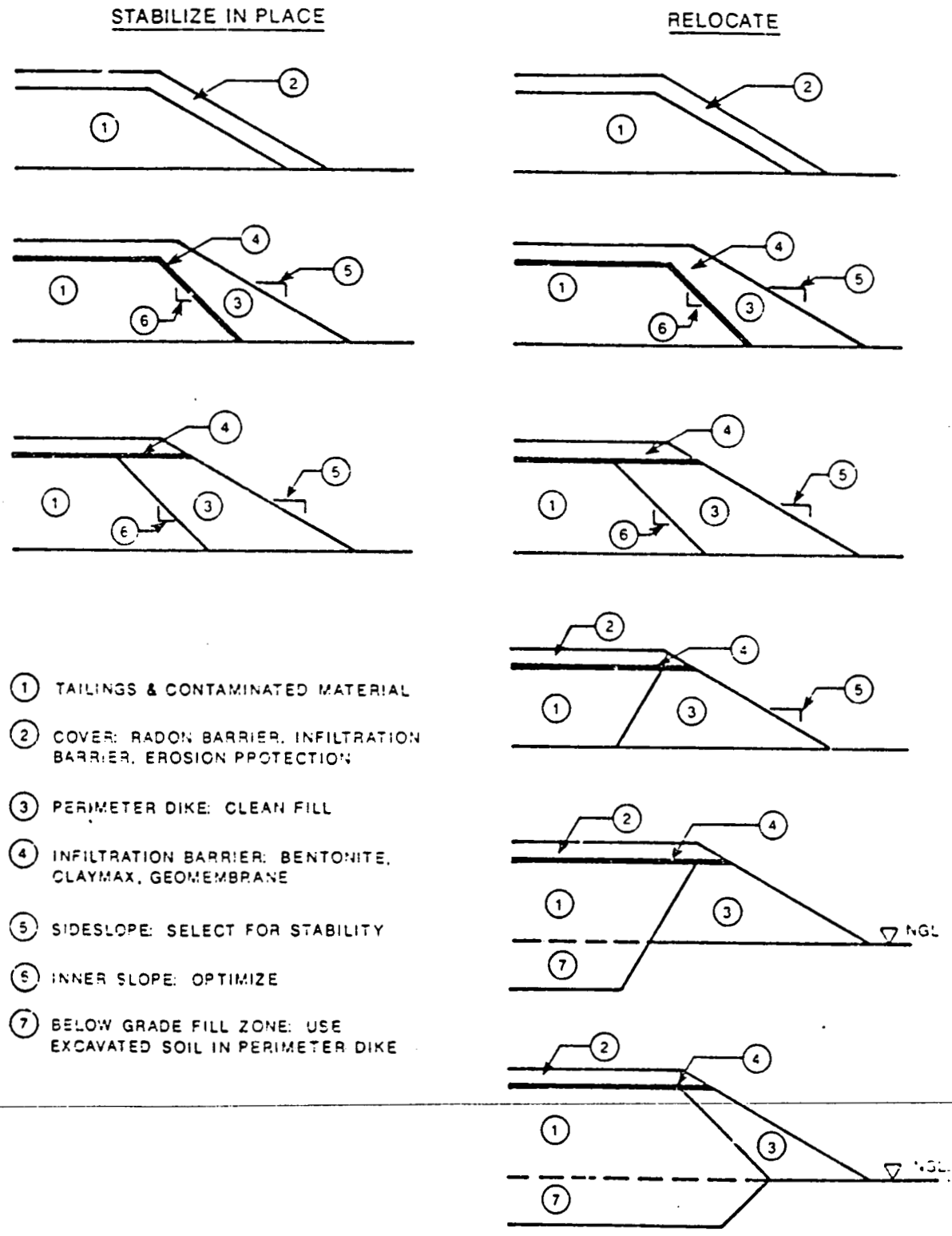

FIGURE 7.1
"CHECKLIST"
PERIMETER DIKE ALTERNATIVES

000019

saturated. Conversely, if the topslope cover at a site in an intermediate climate zone incorporates only a drain and riprap, significant precipitation runoff from the topslope will flow towards and over the sideslope infiltration barrier. The potential for saturation of the sideslope infiltration barrier is considerably greater for piles without topslope vegetation.

If the degree of saturation of the sideslope infiltration barrier is too great and the resulting water flux through the sideslope cover derogates from achieving MCLs at a disposal cell's point of compliance, the designer should consider alternative perimeter dike details. A buttressed cell approach could be used; i.e., Claymax or a soil amended with a high percentage of bentonite may be placed over the existing sideslopes of the pile, a drain constructed over these, and finally the slopes buttressed by clean fill. The suitability of such an arrangement will have to be confirmed by stability analyses which include consideration of failure along the potential slip surface formed by the low-strength bentonite or bentonite-ammended soil. Preliminary analyses by the DOE confirm that for slope heights less than about 20 feet, if the inner, or low strength, slope or plane is about three horizontal to one vertical and the outer slope about five horizontal to one vertical, adequate factors of safety may be achieved.

An alternative to placing the very low permeability layer down the sideslope is to continue the layer out from the topslope at the same inclination as used on the topslope, and extend it sufficiently far over clean fill to preclude infiltration coming through the perimeter dike from contacting the tailings. This arrangement is shown on Figure 7.1. The arrangement is likely to be relatively expensive if the perimeter dike height is great, but it does facilitate construction in that it avoids the need to place Claymax or other low permeability layers on inclined slopes. There is concern that back-flow or seepage through the clean fill may occur. Such seepage could contact the tailings and become contaminated. To prevent this, it may be necessary to construct a capillary break or drain between the tailings and the clean fill, which would increase the cost of this particular perimeter dike design.

7.3 PILE RELOCATION

All three of the perimeter dike details described above could be used if the tailings are relocated. In addition, the three additional perimeter dike details shown on Figure 7.1 are feasible. For example, a complete dike of clean fill taken from the cell excavation is to be used for the Gunnison tailings disposal cell; the cost of this refinement is about one million dollars more than a conventional sideslope cover. A complete dike of clean fill could in theory be used to stabilize tailings in place. The cost of building the dike and filling in behind with tailings is not likely, however, to be economical. This option is not envisaged for any UMTRA Project pile that will be stabilized in place.

000050

The outer slope of a clean fill dike could be placed as flat as five horizontal to one vertical, and it could be covered with erosion-resistant rock riprap. If this is done, the outer slope will differ little from a conventional sideslope. However, because the dike is of clean fill, it may be possible to increase the outer slope to three to one and establish vegetation directly on the outer slope. Erosion control will be verified according to the procedures discussed in Section 10.0 (see also Figure 6.4).

In order to prevent possible contact of the tailings with water seeping by backflow through the dike, it may be necessary to install a capillary break or drain between the tailings and the dike. Alternatively, anisotropy may be built into the dike by layered fill placement and compaction. The degree and inclination of the anisotropy would have to be arranged to direct water from the top cover away from the inner part of the dike and away from the tailings. It is also feasible that the outer part of the dike could be constructed of material more permeable than the inner part; this would tend to direct flow from the topslope away from the tailings.

The material for the dike can be economically excavated from the base of the disposal cell. Such an excavation would increase the capacity of the disposal cell, thereby reducing the area and cost of the facility. The depth of the excavation would be limited by the nature of the soils at the site and the depth to the groundwater table beneath the disposal cell. Site-specific investigations are required to optimize the alternative design for each facility.

Perimeter dikes of clean fill are a valuable design option in achieving MCLs. There is no need to decide if flow thorugh the perimeter dike will be saturated or partially saturated as there are no tailings beneath the dikes and no possibility for contamination of water seeping through the dikes. There is no need to be concerned about freeze and thaw effects on the soil. Vegetation may establish and the roots may grow deep, without concern for biointrusion to the tailings. Limited erosion of the dike could occur, and the tailings would remain safely encapsulated in the disposal cell.

8.0 THE CHECKLIST COVER

8.1 CHECKLIST COVER OBJECTIVES

The Checklist Cover as shown on Figure 8.1 incorporates all reasonable components possibly required at a site to:

- o Control erosion.
- o Limit infiltration.
- o Provide freeze/thaw protection.
- o Inhibit radon emanation.
- o Drain or shed precipitation.
- o Control biointrusion.
- o Be self renewing and adaptable to climatic change if vegetation is used.

8.2 APPLICATION OF THE CHECKLIST COVER APPROACH

In order to determine the appropriate components to be incorporated into the cover at a particular site, proceed as follows:

- o Obtain site-specific data.
- o Examine relevant characteristics of the natural landscape (gullies, vegetation, and the like.)
- o Examine the Checklist Cover and eliminate components on the basis of criteria in the Component Elimination Criteria List in Appendix B.
- o Compile the final cover as a composite of the remaining, non-eliminated components.

The checklist approach to the design of a cover is simplistic in that each component tends to be viewed in and of itself. In reality, there is considerable interaction of the various components. It has been said that the various components, properly selected, form a functional synergistic entity. For example, in theory the use of CLAYMAX as the only operational infiltration barrier is reasonable. However, demands such as stability constraints dictate relatively flat slopes for the bentonite layer. Thus, there may be little gravity-induced runoff or shedding of precipitation through the drain above the bentonite layer. An hydraulic head could build up above the thin bentonite layer; the result would be an increased gradient and hence increased infiltration through the infiltration barrier. To reduce the potential for buildup of water in the drain, it is prudent to place a soil layer (probably required at any rate for frost

000052

protection) above the infiltration barrier, and to establish vegetation in the soil. The evapotranspiration of the vegetation will reduce the frequency and the amount of percolation reaching the drain, hence, the need to rely on lateral shedding to remove water from the pile. The designer should always be on the lookout for possible opportunities to enhance the interactive or synergistic effect of the various components in a cover.

It is important to note that the Checklist Cover is only a part of the design process. The checklist approach is intended only to assist the designer; it is not a substitute for professional judgement and the compilation of an appropriate site-specific design justification. Data, design evaluations, and calculations are required to validate the suitability of the chosen design for the specific site. The checklist cover approved also facilitates identification of cover design details required to achieve ALARA levels when appropriate.

8.3 SPECIFIC COVERS

In theory, the use of the Checklist Cover approach could lead to a very large number of different covers. In practice, a limited number of cover types or combinations of Checklist Cover components has been identified. These are:

- The Standard Cover: An example is the Ambrosia Lake cover as shown in Figure 2.1. The three components are: the radon/infiltration barrier of compacted soil; the bedding or filter sand; and the erosion protection rock.

- The Double Drain Cover: An example is the cover for the sideslopes of the Durango, Colorado, disposal cell (see Section 15.4). The components are: a radon/infiltration barrier of compacted soil; a drain: a zone of random soil, the purpose of which is to increase the depth of the cover to protect the infiltration barrier against freezing and thawing; a bedding layer; and the erosion-resistant rock.

- The Full Component Cover: This cover incorporates all the elements or components of the Checklist Cover. Examples are the Gunnison and Grand Junction topslope covers (see Sections 15.1 and 15.3)

The performance of these covers is discussed in detail in Section 12.0. Before undertaking that discussion, however, we discuss the performance of two of the individual components of the Checklist Cover: the bentonite infiltration barrier and the vegetated soil layer.

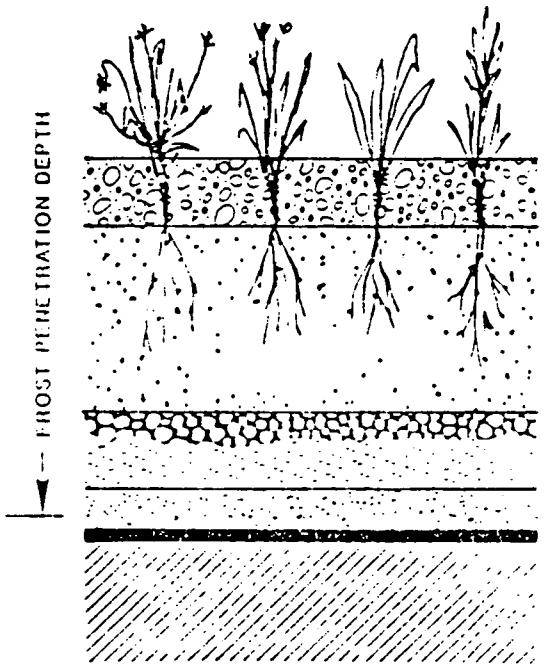

	VEGETATION
0 – 1.0'	ROCK MULCH
3.0'	GROWTH MEDIUM & FROST PROTECTION
1.0'	BIOBARRIER: COBBLES (TOP CHOKED OR FILTERED)
0.5'	DRAIN: CLEAN SAND INFILTRATION BARRIER: CLAYMAX
1.5' (MIN.)	RADON BARRIER: CLAY/SILT

FIGURE 8.1
"CHECKLIST"
TOP COVER

000054

9.0 TECHNICAL APPROACH TO THE USE OF BENTONITE FOR INFILTRATION BARRIERS

9.1 GENERAL

The infiltration barrier can be one or more of the following:

- o A low permeability soil that also functions as the radon barrier.
- o A soil amended with bentonite that also functions as the radon barrier.
- o A layer of bentonite two to six inches thick.
- o A CLAYMAX mat (or geosynthetic), which is a commercial product that consists of a thin layer of bentonite between two geotextiles. The bentonite is 0.25 inch dry, 1.0 inch hydrated with free swelling, and 0.33 inch when hydrated and subject to overburden stresses similar to those experienced in a typical cover.
- o The soil and vegetation placed as the top components of a cover

9.2 CLAYMAX

Some technical details about CLAYMAX are:

- o The saturated hydraulic conductivity is about $1x10^{-9}$ cm/s. The manufacturers of CLAYMAX claim an hydraulic conductivity of less than $1x10^{-9}$ cm/s. Mitchell (1976) gives the hydraulic conductivity of bentonite as ranging from $1x10^{-8}$ to $1x10^{-9}$ cm/s. Tests done by the Technical Assistance Contractor (TAC) on the UMTRA Project confirm the low hydraulic conductivity of bentonite.
- o The effective angle of friction varies from four to 10 degrees. This strength range is taken from data in Mitchell (1976) for bentonite. Tests by the TAC confirm this strength range. The manufacturers of CLAYMAX quote an hydrated strength of eight degrees.
- o Bentonite is a natural material; it is not expected to alter during the disposal cell design life.
- o Installation is easy. Joining is achieved by overlapping adjacent panels by about six inches.
- o The geotextiles are not long-term elements of the mat; they will deteriorate and should not be relied on as a functional part of the cover. Their purpose is to facilitate transport and placement of the mat.

The following are some design details for the use and construction of covers that include CLAYMAX as the operative infiltration barrier (see also Figures 9.1 and 9.2).

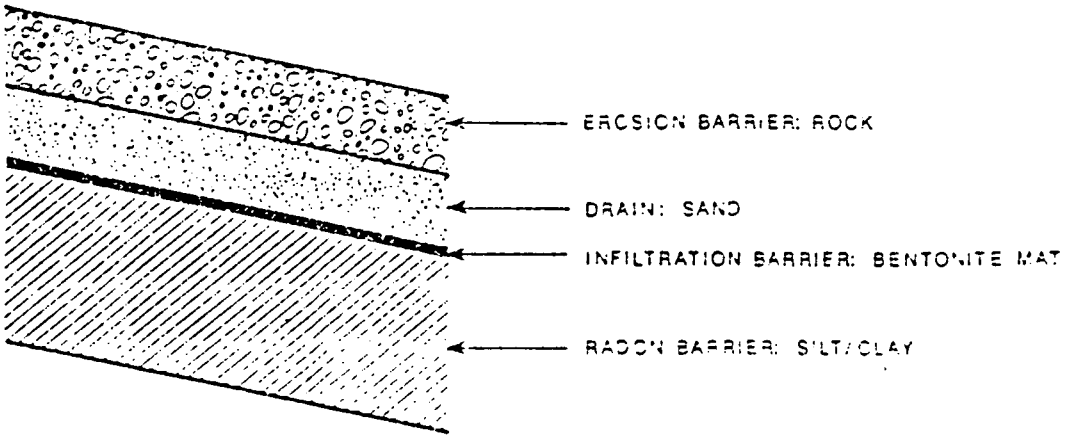

EXAMPLE I

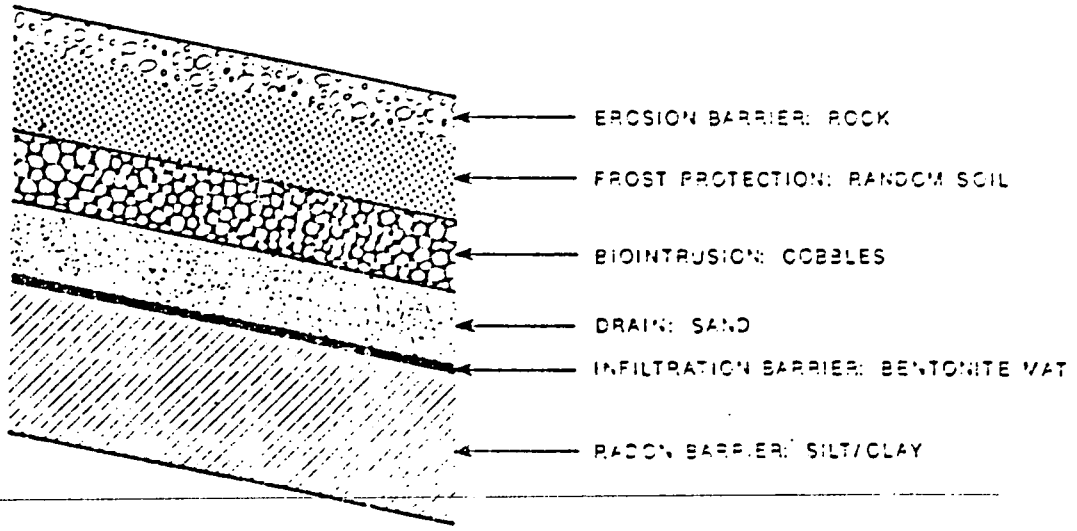

EXAMPLE II

FIGURE 9.1
POSITION OF BENTONITE MAT INFILTRATION BARRIER IN UMTRA COVERS

000056

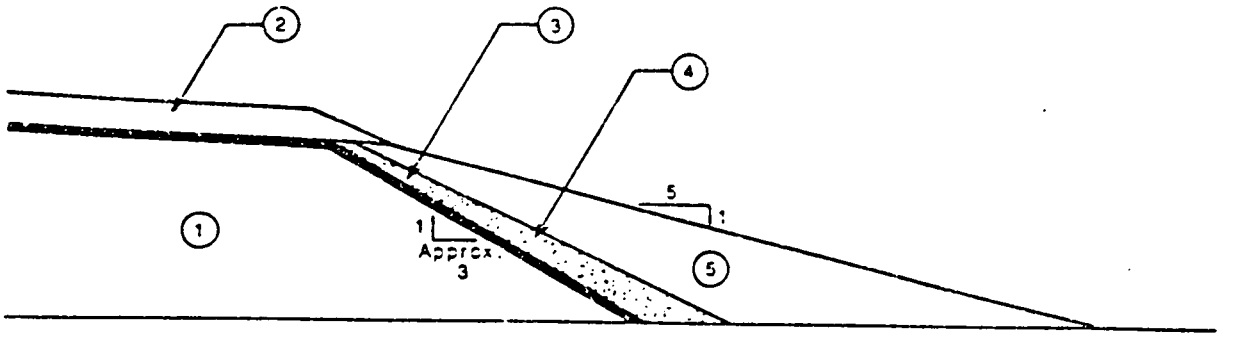

1. ENCAPSULATED MATERIALS: TAILINGS
2. CELL COVER
3. SIDESLOPE INFILTRATION BARRIER: BENTONITE MAT
4. SIDESLOPE DRAIN: SAND
5. SIDESLOPE DIKE OR BERM: CLEAN FILL

FIGURE 9.2
BENTONITE MAT INFILTRATION BARRIER
ON CELL SIDESLOPES

- Place above the radon barrier and below a sand drain. The mat is placed above the radon barrier because the fine-grained soils of the barrier make an ideal bedding layer. The mat should not be placed within the radon barrier because the permeability of the soils of the radon barrier are such that drainage is not facilitated and hence an hydraulic head could build up above the mat and increase the water flux through the mat. The radon barrier should be sloped at least two percent so that precipitation entering the drain above the mat can flow off the pile.

- Cover with a filter (or drain). The particle gradation should be primarily a clean sand. The hydraulic conductivity should preferably be no less than 0.1 cm/s. The drain thickness should be about six inches. The purpose of the drain is to preclude the buildup of an hydraulic head on the bentonite; water will flow downslope through the drain and off the pile, and will not accumulate above the mat and increase the hydraulic gradient through the bentonite.

- Place beneath depth of freeze/thaw. Data to prove conclusively that the bentonite is not affected by freezing and thawing are not currently available; tests are in progress and they indicate that freezing and thawing will not decrease the bentonite's permeability. Until data to prove no reduction in hydraulic conductivity with repeated freezing and thawing become available, the conservative approach of placing material beneath the predicted depth of frost penetration should be adopted.

- Do not use on unbuttressed sideslopes. Bentonite has a very low strength and should be used with extreme caution on sideslopes. The buttress detail shown on Figure 9.2 may be adopted if slope stability analyses confirm adequate factors of safety against sliding, deformation, or other instability.

- Construct a topslope of 4.5 percent or less. The factor of safety of an infinite slope of 4.5 percent that incorporates a material with an angle of friction of four degrees is 1.5. To maintain static stability, 4.5 percent is therefore the maximum topslope inclination that should be used unless more detailed analyses are completed to demonstrate stability. For dynamic, or earthquake, loading conditions, a pseudostatic analysis using the site design acceleration should be completed to confirm that the topslope will remain stable.

The DOE proposes to incorporate CLAYMAX in selected UMTRA Project disposal cell covers because of the potential benefit of CLAYMAX in reducing or controlling infiltration. The DOE believes that a cover is less permeable with CLAYMAX than without it. The DOE is not concerned about the thickness of CLAYMAX, and does not believe a thicker layer of bentonite is required. The DOE considers that downrating of the hydraulic conductivity of CLAYMAX on an arbitrary basis is unwarranted. As described in the section of this report on performance assessments of covers, the CLAYMAX will not be the only impediment to

000058

infiltration through the cover. The vegetation and associated evapotranspiration will be the first component to limit infiltration. The drain, which will shed water laterally off the infiltration barrier, will be the second component limiting infiltration. The CLAYMAX will be but the third component installed to control and limit infiltration. Because of the operation of the two upper components, the CLAYMAX will not be called on at all times to impede infiltration; only on those rare occasions when precipitation exceeds the holding and evapotranspiration capacity of the soil and plants, and when the seepage from the soil precludes complete shedding of seepage water, will the bentonite be called on to intercept infiltration. Accordingly, even if some parts of the bentonite layer are not operating at their full design hydraulic conductivity, the resultant average flux through the cover will nevertheless be considerably less than the saturated hydraulic conductivity of the bentonite layer.

Finally, arbitrary downrating of the hydraulic conductivity of CLAYMAX logically leads to its elimination: Why place CLAYMAX, with an arbitrarily assigned hydraulic conductivity greater than 1×10^{-8} cm/s, when compacted soil will have at least the same hydraulic conductivity?

9.3 BENTONITE ONLY

A second method of providing a layer of bentonite as an infiltration control component in a cover is to spread the bentonite above the radon barrier to the required thickness. The minimum practical thickness of bentonite that could be spread is about three inches. In practice, it would probably be better to place a four to six inch layer of bentonite. Depending on the material, and hence the surface roughness of the radon barrier, it may be advisable to place a geotextile over the radon barrier before placing the bentonite. It will probably be necessary and prudent to cover the bentonite layer with a geotextile before placing subsequent cover components. This upper geotextile will protect and maintain the in-place thickness and position of the bentonite layer during placement of subsequent layers. The geotextile will deteriorate with time so it cannot be relied on, nor is it needed, for the long-term performance of the bentonite layer. A bentonite layer, as described here, will be both difficult and expensive to construct. Moreover, for the reasons discussed in the previous section, the DOE does not consider that so thick a layer is required unless site conditions are such that it is not possible to rely on the operation of the soil and plants to evaporate water, or the drain to adequately shed water. For those reasons, CLAYMAX is preferable to a layer of pure bentonite.

9.4 BENTONITE-AMMENDED SOIL

In most cases, the void space of a sand or silt is about thirty percent of the total volume. Filling this void space with bentonite should produce a very low permeability material. Very limited testing on the UMTRA Project indicates that the addition of up to thirty percent bentonite to a suitable soil can reduce the hydraulic

conductivity of the mix to about 5×10^{-9} cm/s. Intimate mixing of the two materials is necessary in order to achieve the minimum practical permeability. Field compaction of a material with such a high bentonite content is very difficult--if bentonite gets too moist it sticks to compaction equipment. For these reasons the DOE has elected not to use this approach.

No data are available about the strength of high-percent bentonite mixes. In theory, the strength should be higher than pure bentonite. It is possible that in a situation where the low strength of pure bentonite is an impediment to its use, a bentonite/soil mix could be used. For example, a bentonite/soil mix may be viable on the sideslopes of a cell. The sideslopes may have to be buttressed to attain the desired factor of safety, but the extent of buttressing may be considerably less than if pure bentonite were used.

000060

10.0 TECHNICAL APPROACH TO THE DESIGN OF SOIL COVERS

10.1 OBSERVATIONS AT SHIPROCK

Some vegetation has established naturally on the Shiprock, New Mexico, pile. The cover design at that site is a seven foot radon barrier of compacted soil, six inches of relatively low permeability bedding sand, and one foot of rock that constitutes the erosion barrier. Vegetation is not a planned part of the remedial action. More vegetation occurs on the sideslopes than the topslopes.

The sideslope vegetation includes 12 saltcedars, deep-rooting phreatophytes that are using moisture in the bedding layer and radon barrier. Vegetation on the topslopes is currently limited to russian thistle and summercypress, which are annual tumbleweeds that break off from their tap root every fall and disperse downwind.

The relative paucity of vegetation on the topslopes by comparison with sideslopes may be due to the periodic desiccation of the filter layer and upper portions of the radon barrier due to evaporation. This hot, dry condition would kill plants that fail to extend their roots into the moist portion of the moisture barrier prior to surficial desiccation. On the other hand, the larger rocks of the sideslope may provide greater insulation, hence protection against heating and drying of the filter layer. This would result in a more favorable environment for germination and growth of plants. The phenomenon is pronounced on north facing slopes where reduced exposure to the sun's rays results in reduced evaporative moisture loss.

In the previously described study on the moisture content of the radon barrier, it is stated that at the points at which observations were made, drainage or evaporation occurred from surficial layers within a few days of precipitation. Shallow-rooting herbaceous vegetation at the periphery of the topslope and on the sideslope suggests sustained availability of surficial moisture. The observations at the crests cannot not necessarily be extrapolated for the entire surface of the pile. Thus, some parts of the radon/infiltration barrier where little vegetation is present may indeed function partially saturated, but where there is significant vegetation, the infiltration barrier may be saturated because of the longer residence of moisture in the filter layer.

The appearance of vegetation on the Shiprock pile, which is in an arid region, leads to the conclusion that there is a significant likelihood that vegetation will establish naturally on piles even through thick rock erosion protection rock layers. (No significant vegetation has appeared on the Clive, Utah, pile. This may be due to the use of high-salinity water in placement of the radon barrier.)

10.2 REASONS FOR USING VEGETATION

At many UMTRA Project piles, relatively thick layers of random soil are required to protect the infiltration barrier against frost. This layer is an ideal growth medium for vegetation. Because the piles provide a place for the vegetation to grow in a controlled manner, and because vegetation may grow on these piles, the utility of vegetation as part of the stabilization approach has been evaluated.

Another reason for using vegetation on the topslopes of piles is its effect in reducing infiltration. Evapotranspiration will significantly reduce the amount of water that percolates through the soil layer to the underlying drains above the infiltration barrier. Hence, there is a considerably reduced need to rely on the capacity of the drain to carry percolating water off the pile; there is a considerably reduced potential for the buildup of an hydraulic head in the drain above a thin bentonite layer, and therefore a reduced potential for infiltration.

For the above reasons, there has been a strong movement towards using vegetation on selected pile topslopes. The remainder of this section accordingly discusses the technical approaches to the engineering design of soil and vegetated covers. Considerable additional detail on the use of vegetation on UMTRA Project covers is contained in the report on the vegetative covers special study (DOE, 1983f).

10.3 ENGINEERING DESIGN OF SOIL COVERS

The NRC has established the following methods as technical approaches for justifying or designing soil covers and slopes:

- Compile a detailed geomorphological study of the site vicinity to establish the relationship between watershed area, runoff rates, vegetation, slopes, and gully development.
- Demonstrate by a mathematical analysis that a gully on a given slope will not, as a result of the average annual precipitation, intrude into the tailings.
- Determine, using a mathematical calculation, the slope length required to develop a gully for a given slope inclination.
- Calculate the potential soil loss due to sheet flow erosion.
- Compile an empirical evaluation of the potential for the formation of deep gullies on soil sideslopes and soil dikes, with the objective of precluding deepening of the gully through the soil into the tailings.
- Undertake a rigorous cost/benefit comparison between the use of rock and soil covers in enhancing pile erosion protection.

Not all of the above approaches need be used at each site. It is left to the discretion of the designer to decide which one or combination of the approaches is required for a site to provide to the NRC the required level of proof or certainty that the soil cover will remain stable.

The DOE recommends for consideration the following additional methods for justifying or designing soil covers:

- o Incorporate features into the design that establish erosion base levels or that preclude gully development or propagation of gullies (see Figures 10.1 and 10.2).

- o Use an acceptable method (such as a water balance model like HELP (DOE, 1984) or CREAMS (DOA, 1980)) to calculate the required depth of soil to enhance moisture retention and minimize seepage to the filter above the bentonite infiltration barrier.

The technical approach of incorporating erosion control features into the topslope cover should be used only when it is not possible to show by site and regional geomorphic studies and the other mathematical analyses discussed above that gullies will not develop, or that if they do develop, they will not lead to unacceptable consequences. The reason for avoiding such erosion base level features, if possible, is that they will inevitably involve additional cost, and certainly a cost in excess of the cost of detailed geomorphological and engineering studies. For one UMTRA Project site for which such features have been considered, the potential additional cost is $150,000.

There are a number of variations or details in erosion control features. The most critical design detail is the perimeter crest arrangement. This is the final erosion base level control feature for the pile topslope. In general, it may be argued that no gully will develop or extend below the horizontal line established by the crest elevation of the perimeter dike rock. If the horizontal line intersects the radon/infiltration barrier within a distance from the cell crest that provides sufficient runoff for gully formation, then the designer should consider the likely affect of flow from such a gully. Water from the gully may be anticipated to spread out from the gully and flow as "concentrated" sheet flow over the crest and hence the pile sideslopes. The size of the erosion control rock on the sideslope should be adequate to prevent erosion by the concentrated sheet flow. If rocks of adequate size are not reasonably available, the designer should consider either raising the elevation of the crest dike in order to create a greater spreading distance, or including intermediate erosion base level dikes in the topslope details. The spacing of intermediate dikes may be conservatively estimated by assuming that the toe of successive upgradient dikes should be at the same elevation as the crest of the preceeding downgradient dike. The spacing may be increased if the approach recommended by Heede (1976) is used. Heede's approach incorporates the field observation that the

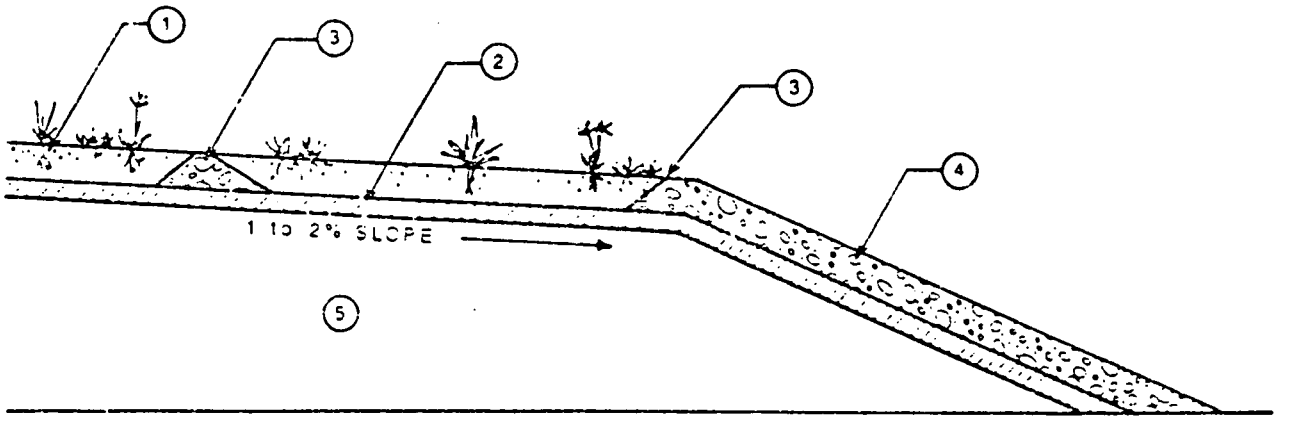

1. UPPER TOP LAYERS: FILTER, BIOINTRUSION BARRIER, SOIL, & VEGETATION
2. LOWER TOP LAYERS: RADON & INFILTRATION BARRIER
3. GULLY EROSION INHIBITORS: ROCK BERMS OR DIKES
4. SIDESLOPE EROSION BARRIER: ROCK
5. TAILINGS & CONTAMINATED MATERIAL

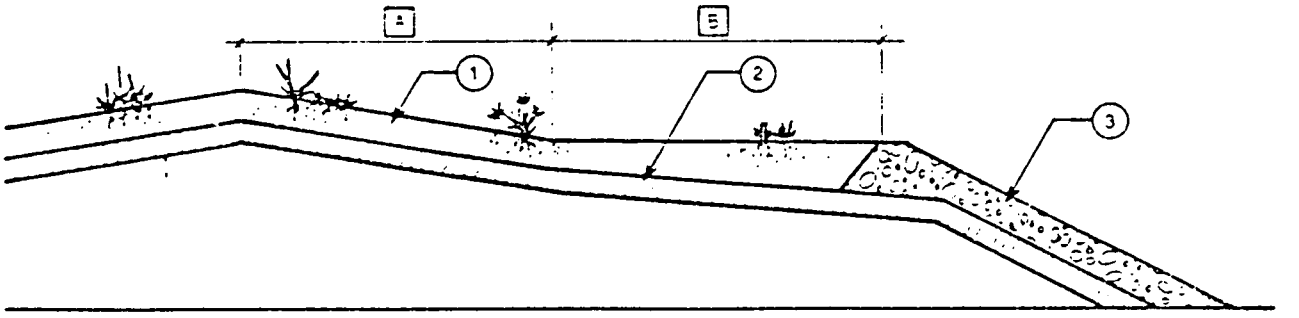

A. INCLINED SLOPE: LENGTH LESS THAN CRITICAL TO INITIATE GULLY

B. FLAT SLOPE: NO GULLY DEVELOPMENT POSSIBLE

FIGURE 10.1
COVER DESIGN CONCEPTS FOR PREVENTION OF GULLIES

000094

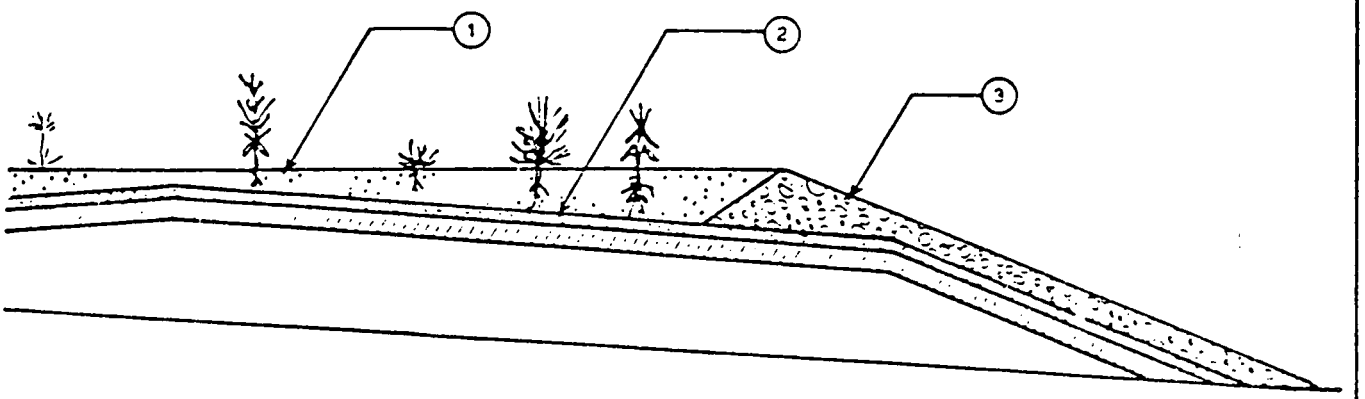

1 FLAT TOPSLOPE

2 INCLINED DRAIN & INFILTRATION BARRIER

3 SIDESLOPE WITH EROSION CONTROL ROCK

FIGURE 10.2
COVER WITH INCLINED DRAINAGE LAYERS AND FLAT TOP

slope of the gully infilling behind a gully-control dike is not horizontal but inclined. The inclination is a function of site-specific factors, but on average appears to be about fifty percent of the pre-gully slope surface.

10.4 BIOINTRUSION

In designing a soil cover, the potential for biointrusion must be considered (see Figure 10.3). Table 10.1 tabulates the factors involved in the evaluation of cover components for biointrusion control.

A buried layer of dry cobbles (one or more inches in diameter) has been shown to reduce root penetration and other forms of biointrusion into interred waste (Hakonson, 1986; Cline et al., 1980). The principal factors that impede root penetration are the lack of capillary pores and the presence of interstitial air spaces. The cobbles may be considered a capillary break. Downward extension of roots occurs only where soil fines have filtered into interstices. It is important to keep soil out of the biobarrier to ensure its long-term resistance to root penetration. It is also important to keep the voids free of water. Therefore, biobarrier designs for the UMTRA Project should have choked rock along the top surface to resist soil infiltration, and should have a high-permeability drain along the bottom to assure rapid movement of water out of the barrier. A drain layer may not be necessary if the biobarrier is on a slope steep enough that water will quickly move off the surface of the underlying radon barrier.

Preliminary cover designs for proposed waste-isolation cells at Los Alamos National Laboratory and the Hanford Reservation (see Section 11.0) incorporate cobble biobarriers of a meter or more in thickness. This thickness is greater than should be necessary for the UMTRA Project because uranium mill tailings are less hazardous than the wastes at these facilities and, relative to the Hanford program (with a 10,000 year performance requirement), the UMTRA Project's design life is less. The DOE's position on biointrusion is that a biobarrier thickness of greater than one foot is unnecessary and impractical over the large surface areas of stabilized UMTRA Project piles. Instead of producing a thick biobarrier, the UMTRA Project's approach will be to construct an efficient layer in which interstices remain free of soil and water, and any given root will be obstructed by at least two voids between the overlying soil and underlying waste. Rocks in the barrier will have a minimum diameter of one inch and a maximum diameter of less than one-half the total layer thickness.

000036

- ROCK -

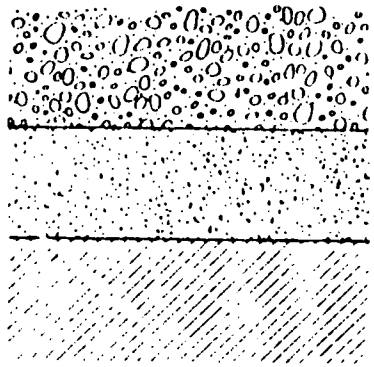

ROCK LAYER: the thicker the better (for resisting biointrusion)
ROCK SIZE: the smaller the better

FILTER LAYER: thickness does not matter
FILTER PERMEABILITY: the more permeable the better

RADON BARRIER: the thicker the better
BARRIER TEXTURE: the more clayey the better

- VEGETATION -

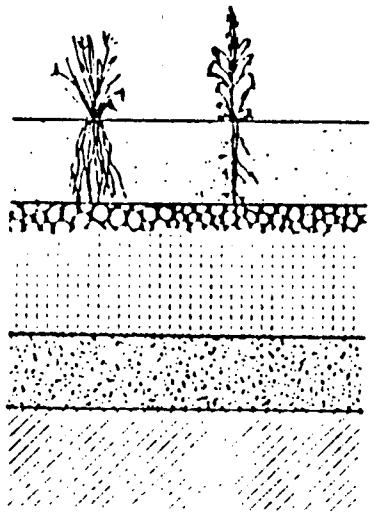

VEGETATION: the grassier the better

ROOTING MEDIUM: the thicker the better
ROOTING MEDIUM: the more capillary pores the better

BIOBARRIER: the fewer capillary pores the better

FILTER LAYER: the more permeable the better

RADON BARRIER: the thicker the better
BARRIER TEXTURE: the more clayey the better

FIGURE 10.3
FACTORS IN THE EVALUATION OF COVER COMPONENTS FOR BIOINTRUSION HAZARD

00000

74 18

Table 10.1 Characteristics related to the likelihood of biointrusion in a stabilized pile with a vegetative cover

Element	Higher risk conditions	Lower risk conditions
Biota	o Large trees with deep roots (e.g., phreatophytes)	o Predominantly grassy vegetation in vicinity
	o Long growing season	o Little or no topsoil in region
	o Humid to subhumid climate	o Short growing season
	o Colonies of burrowing animals (prairie dogs, gophers)	o Arid or semiarid climate
Cover Design		
. Topsoil	o Not underlain by a biointrusion barrier[a]	o Underlain by biointrusion barrier[a]
	o Less than optimal thickness as predicted by water balance models	o Optimal thickness for moisture retention
	o Poor moisture and nutrient relations (too much sand or clay)	o Favorable moisture and nutrient relations (loamy soil)
. Biointrusion barrier (choked rock cap and poorly graded cobbles)[a]	o Absent	
	o Not properly drained by conductive and restrictive layers	o Well drained with adequate choked rock design
	o Poor choked rock design	
	o Rock size (and pore size) too small to allow adequate void air space	o Rock size of two inches or larger
	o Layer too thin (fewer than two interstitial voids along the path of a given root)	o High quality rock with low percentage of absorbers

000068

Table 10.1 Characteristics related to the likelihood of biointrusion in a stabilized pile with a vegetative cover (Concluded)

Element	Higher risk conditions	Lower risk conditions
3. Conductive (drain) layer (also called filter bedding)	o Low permeability	o High permeability
4. Restrictive layer (e.g., Claymax and/or radon barrier)	o High permeability o Susceptible to freeze thaw action or cracking	o Low permeability o Insulated from or resistant to freeze thaw action or other weathering

[a]Biointrusion barrier material should have minimum grain size of less than 15 percent passing #10 sieve, to result in capillary rise of less than 1 inch.

11.0 OTHER DESIGN APPROACHES

11.1 LOW-LEVEL RADIOACTIVE FACILITY COVERS

Figure 11.1 shows the cover proposed for a commercial low-level radioactive waste disposal facility in Washington. The similarities between this cover and the full component Checklist Cover are immediately apparent. The cover will be placed over a series of trenches to form what is in essence a corrugated cover. It has been said that the similarity between the ideas proposed for the low-level facility and the full component UMTRA Project cover represents an interesting example of parallel evolution of designs to meet similar objectives.

11.2 THE SPANISH COVER

Figure 11 2 shows the cover being considered for remediation of an inactive uranium mill tailings pile in Spain. The climate of the area is arid; about 11 inches of precipitation fall per year during the three winter months, and for the remainder of the year it is dry. Computer modeling of a cover, consisting only of a radon/infiltration barrier, filter, and rock, indicates significant drying of the infiltration barrier. Because of the known conservatism of the computer code in predicting evaporation, the designers are concerned about desiccation of the infiltration barrier and possible drying and cracking of the soil. In order to preclude such drying and cracking they are considering placing an upper layer of random soil to locate the infiltration barrier below the depth of significant drying. Hence, the layer of soil over the radon/infiltration barrier, which on the UMTRA Project is placed to protect the infiltration barrier from freezing and thawing, would be used to protect the infiltration barrier from desiccation cracking.

11.3 THE LOS ALAMOS COVER

Figure 11.3 shows the cover recently proposed by Los Alamos National Laboratory to cover trenches containing low-level nuclear and hazardous wastes. A typical trench is 50 feet wide and hundreds of feet long. Erosion control on the top is achieved by using a gravel mulch--a single layer of stones to absorb the impact of raindrops, encourage the germination of preferred grasses and plant species, and discourage weed growth. Infiltration control is achieved by evapotranspiration and the capillary break effect: the designers estimate that 90 percent of all precipitation is eliminated by evapotranspiration. The capillary barrier effect occurs because the sloping interface between soil and gravel tends to drain the water down the slope and off the sides of the trench.

11.4 COVER DESIGN FOR TRANSURANIC WASTE AT THE HANFORD RESERVATION

The "Barriers Program" (Adams and Wing, 1987) is underway on the Hanford Reservation to develop covers for radioactive waste that is to be stabilized in situ. Included in this waste are transuranic

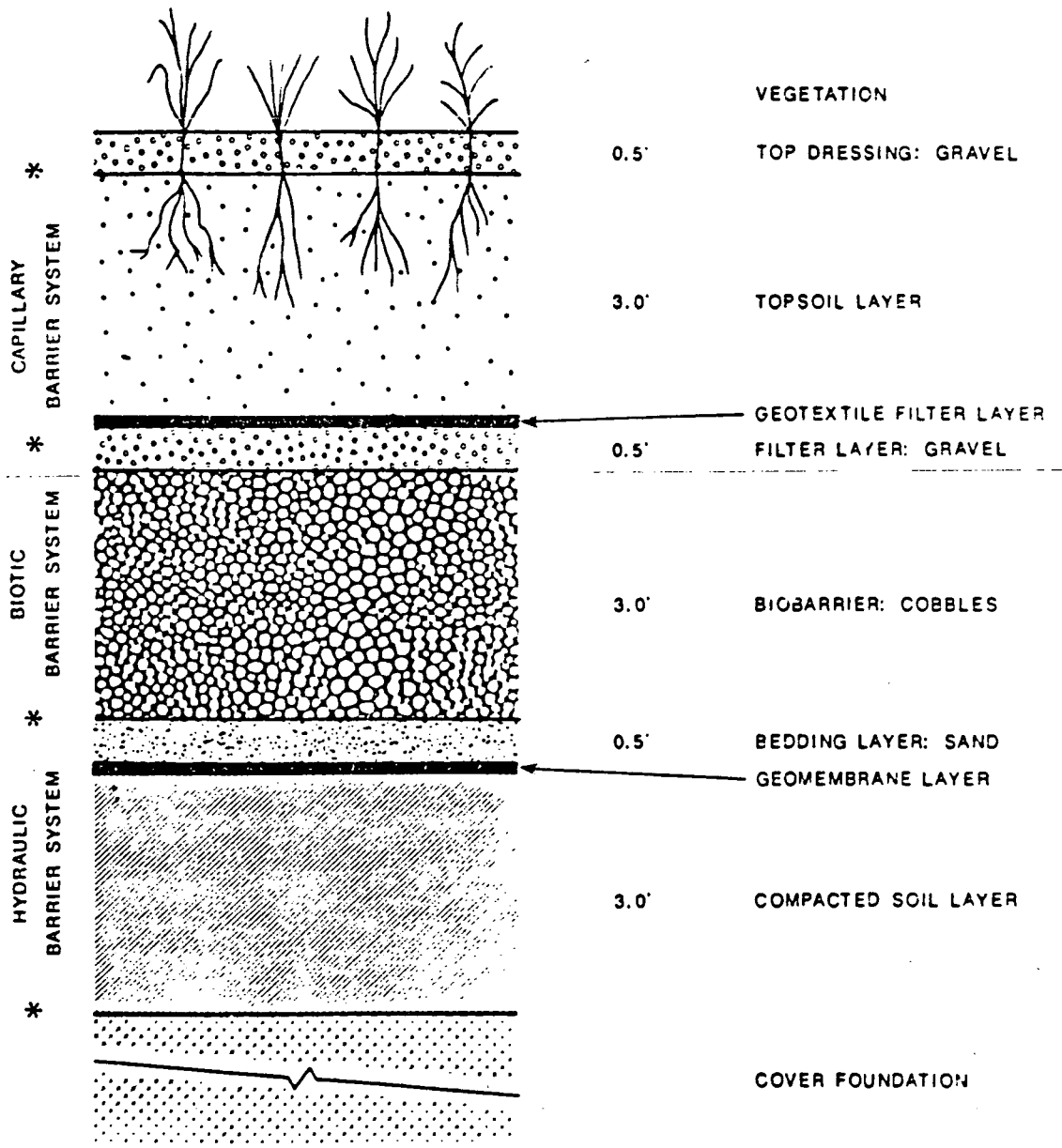

000071

FIGURE 11.1
COVER FOR LOW-LEVEL RADIOACTIVE AND HAZARDOUS WASTE FACILITY
RICHLAND, WASHINGTON

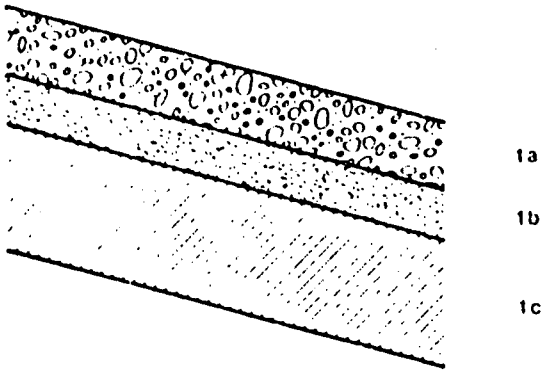

PROPOSED COVER (TOP & SIDES)

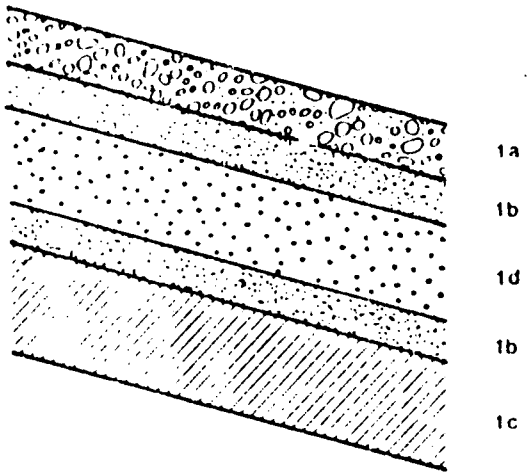

COVER UNDER CONSIDERATION FOR DESSICATION PROTECTION (TOP & SIDES)

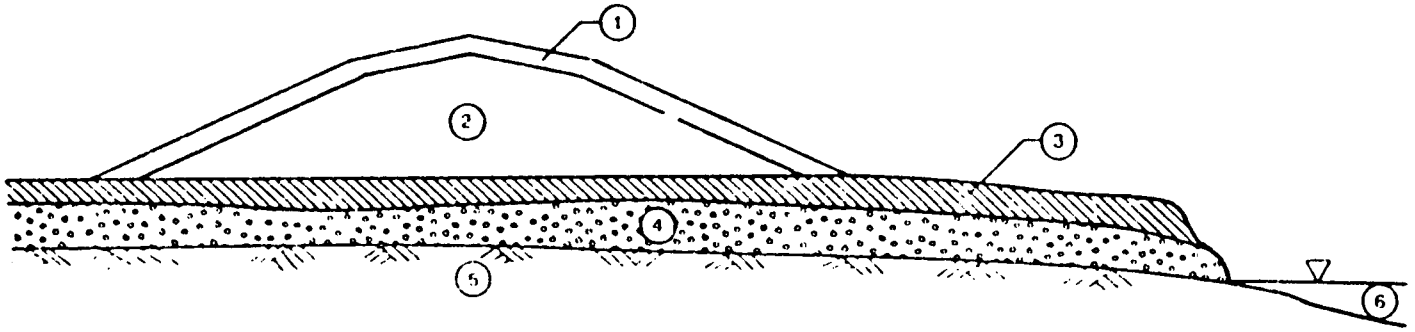

CROSS SECTION THROUGH PILE AND SUBSURFACE PROFILE

(1) COVER
- a) EROSION RIPRAP
- b) DRAIN
- c) RADON/INFILTRATION BARRIER
- d) RANDOM SOIL

(2) TAILINGS

(3) CLAY

(4) GRAVEL

(5) MARL

(6) RIVER

FIGURE 11.2

REMEDIAL WORKS FOR INACTIVE URANIUM MILL TAILINGS PILE IN SPAIN

00 0072

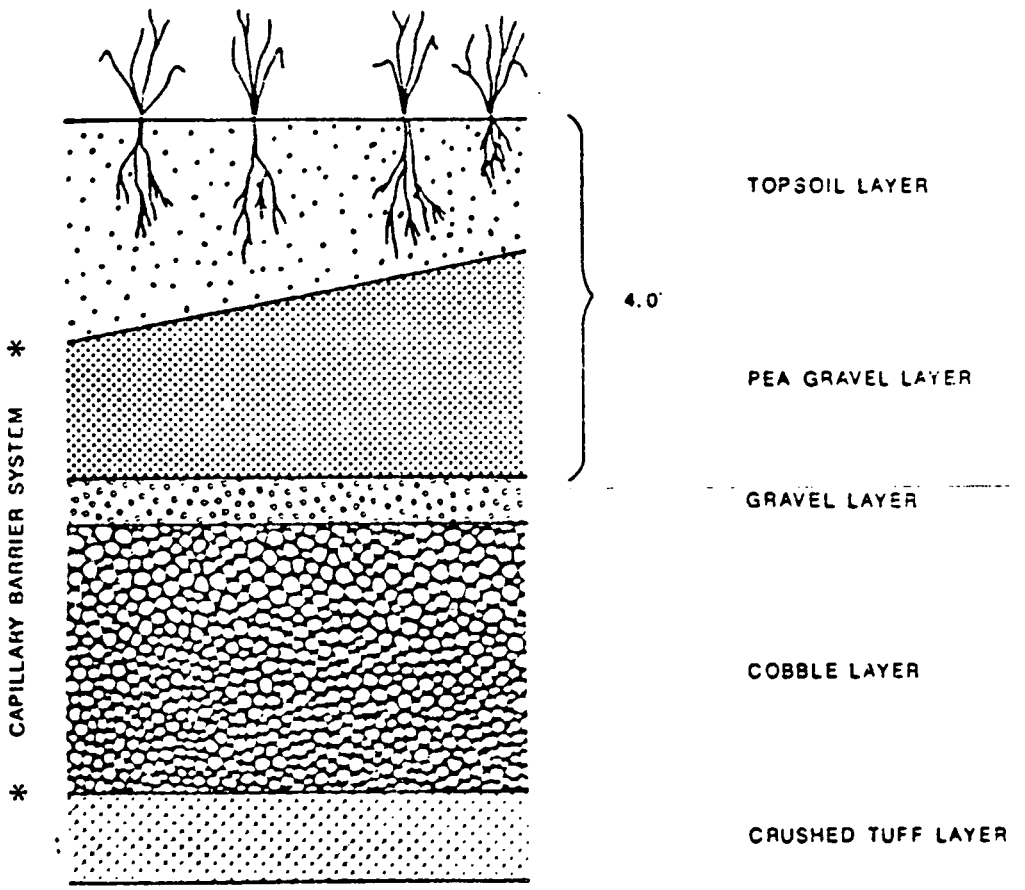

FIGURE 11.3
PROPOSED COVER FOR LOW-LEVEL RADIOACTIVE WASTE TRENCHES
LOS ALAMOS, NEW MEXICO

radionuclides with long half-lives; thus the design for the cover system is considered to be 10,000 years. The cover is therefore intended to respond to climatic change, including doubling of the average annual precipitation, without any decrease in performance. Figure 11.4 illustrates the currently proposed cover system for the Hanford Barriers Program, which is similar in sequence, though not in proportion, to the Checklist Cover proposed for many UMTRA Project piles.

000074

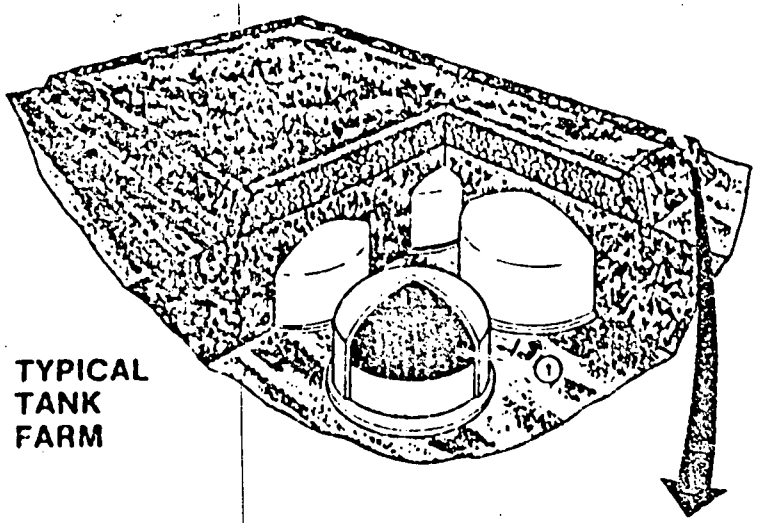

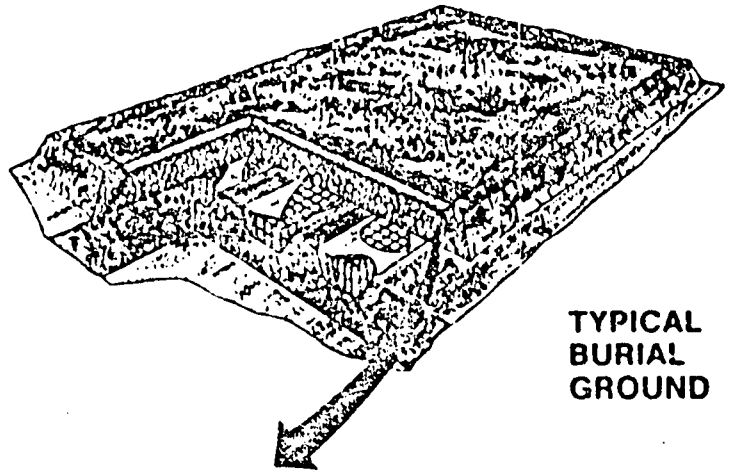

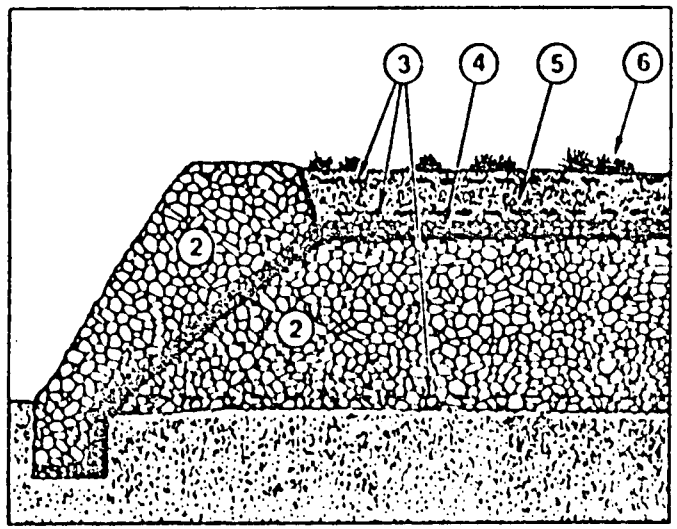

(1) SUBSIDENCE CONTROL

The tanks are only partially filled with waste. Liquids have been removed by pumping, leaving a residual sludge or cake which occupies less than the full tank volume. The space remaining will be filled with basalt gravel so that ultimate subsidence will be minimized.

Voids within burial grounds will be treated also, by filling or by compaction, in preparation for barrier placement.

PROTECTIVE BARRIERS

Man-made barriers of natural materials will be constructed over these sites. The barrier components and function are described as follows:

(2) BASALT RIPRAP

Larger boulders provide erosion protection at the barrier perimeter and prevent animal burrowing and plant root penetration below the soil and gravel filter layers within the barrier.

(3) SUBSURFACE MARKERS

Porcelain or stoneware discs 5" in diameter, 1/2" thick with a pictogram on one side and message on the other. I be placed within the barrier to further warn humans who might dig into the barrier

(4) ROCK/GRAVEL FILTER WITH GEOTEXTILE

A filter layer of gravel will prevent soil from falling through with time. This feature has been observed in geologic formations which are being replicated in the barrier design. Examples of these "natural analogs" of the barriers which have been in existence for over 10,000 years are being studied.

(5) FINE-TEXTURED SOIL

An amended soil will be used to maximize water retention capacity. The design is for retention of not only the low average annual rainfall (6") typical of Hanford, but upwards of two times this amount of precipitation (referred to as the "100 Year Rainfall"). The moisture will be held up in the soil layer and will evaporate. It will not saturate the soil layer nor penetrate below it

(6) REVEGETATED SURFACE ROCK MULCH

Rock armoring placed at the surface of the soil layer acts to diminish soil removal by wind scouring and also collects windblown soils. A vegetation cover on the soil layer also contributes to moisture removal by plant transpiration.

REF: ADAMS AND WING, 1987.

FIGURE 11.4
COVER PROPOSED FOR PROTECTION OF BURIED TRANSURANIC WASTE

12.0 COVER PERFORMANCE EVALUATIONS

12.1 GENERAL

As is noted in Section 4.1, the cover of a cell must protect the cell contents from erosion and misuse, must require minimum maintenance, must last for a very long time, and, most importantly from the perspective of the EPA groundwater protection standards, must limit or control infiltration to and seepage from the pile. Table 12.1 shows how each of these and other design objectives are achieved by the various components of the three specific cover types; i.e., the Standard Cover, the Double Drain Cover, and the Full Component Cover. Because the proposed EPA groundwater protection standards have had little, if any, affect on the cover's role in reducing radon flux, this performance aspect of the cover is not discussed further here. The performance of rock in controlling erosion also has not been affected by the proposed standards and the role of vegetation in controlling erosion is considered in an earlier section; the ideas are not repeated here. Accordingly, this section concentrates on assessment of the infiltration performance of covers and perimeter dikes. In this section, only the general aspects of infiltration performance assessment are discussed. In practice, the DOE does or will compile a performance assessment for each site to quantify the likely infiltration through the proposed cover, and this assessment will be documented in the site remedial action plans.

12.2 THE STANDARD COVER

As described in detail in the discussion of the special study on the monitoring of actual radon barrier moisture contents in the pile at Shiprock, the field and laboratory data indicate that the operative unsaturated hydraulic conductivity of the radon/infiltration barrier is 1×10^{-9} cm/s or less. Accordingly, it was concluded in the special study that it is reasonable to expect qualitatively that typical UMTRA covers should function similarly in similar climatic environments. By this argument radon barriers in typical covers at sites having climates similar to Shiprock and Clive should operate in an unsaturated state. It is feasible to use recorded moisture contents at Shiprock for modeling long-term moisture contents in radon barriers at other UMTRA sites.

The technical approach to the design of a standard cover includes an evaluation of its erosion stability, radon flux reduction, and water flux control. The first two are standard, and are not discussed further here. The technical approach to the evaluation of water flux is as follows.

First, the designer must obtain information about the soil to be used to construct the infiltration barrier. This includes data about soil gradation, index properties, compaction characteristics, and the hydraulic conductivity. The saturated and unsaturated hydraulic conductivity of the soil must be characterized. The relationship between the soil moisture content (degree of saturation) and partially

000076

Table 12.1 Cover design objectives

Cover type	Design objectives			
	Erosion[a] control	Frost protection	Radon control	Limit infiltration
Standard Cover	Rock layer resists PMP flow	At least one foot of radon barrier placed below frost depth	Radon barrier layer	Clay layer serves as infiltration barrier Lateral shedding through the permeable drain
Double Drain Cover	Rock layer layer resists PMP flow	Random soil layer	Radon barrier layer	Clay layer serves as infiltration barrier Lateral shedding through the permeable drain
Full Component Cover	Flat topslopes Soil/vegetation Perimeter dike	Infiltration barrier placed below frost depth	Radon barrier layer	Evapotranspiration by plants Capillary barrier effect of the filtered rock Lateral shedding through the permeable drain Low permeability infiltration barrier

[a]PMP = Probable Maximum Precipitation

saturated hydraulic conductivity should be obtained, preferably by direct measurement; curve fitting techniques based on the relationship between the soil suction and degree of saturation may be used if direct measurement of the partially saturated hydraulic conductivity cannot feasibly be undertaken. All testing of the hydraulic conductivity of the infiltration barrier soil must be done on samples compacted to densities representative of those that will be achieved during field construction.

The second major step in the design and performance assessment of an infiltration barrier is the determination of the range and average moisture content of the infiltration barrier soil. Currently, the only data about the in situ moisture content of the infiltration barrier is the information from the Shiprock tests. These data indicate that the infiltration barrier moisture content is at or close to its placement moisture content at those parts of the pile where direct measurements have been taken.

If the climate of a site is similar to that at Shiprock, it is possible to extrapolate directly from the data for the Shiprock pile to the pile for which it is necessary to establish the moisture content of the infiltration barrier. As an average, if the annual average precipitation is within about three inches of that at Shiprock and the pattern of precipitation is similar, then direct extrapolation is reasonable.

Calculation of the water flux through an unsaturated cover is, in theory, very simple. The flux through the cover is the product of the unsaturated hydraulic conductivity at the ambient moisture content and, where applicable, a unit gradient. To evaluate the impact of such factors on the varying availability of water (due to the nonuniformity of precipitation, runoff times, the effect of evaporation, and pile geometry), the designer may use computer codes such as SPLSHWTR2 or UNSATV (Gee, 1987). The boundary conditions required to use these computer codes may be obtained from data measured at Shiprock or other applicable site test covers.

Partial saturation reduces (or possibly eliminates) the susceptibility of a soil to damage by freezing and thawing. For conservatism, at least one compacted layer and preferably one foot of the infiltration barrier should be beneath the predicted 200-year recurrence interval of frost penetration depth. Because the radon/infiltration barrier above the lower foot could be effected by freezing and thawing, the design performance assessment should evaluate the potential impact of frost-damaged soil on infiltration and radon emanation. Tests of the soil's response to freezing and thawing and its subsequent hydraulic conductivity and radon attenuation will be required in critical cases to obtain data to support sensitivity analyses.

000078

Observations of vegetation at the periphery of the topslope and on the sideslopes suggest that the radon barrier moisture content is highly variable at the creast of the pile and that severe or prolonged moisture depletion is not occurring in the surficial layers. Accordingly, in assessing the performance of a proposed standard cover the designer should take into account the need to provide conditions that minimize the potential for the presence of water retention in the filter drain layer, hence seed germination, and potentially development of saturated conditions in the infiltration barrier. A high permeability drain is probably the most effective way to shed precipitation rapidly from the pile, and prevent a buildup of water that will support plants and result in saturation of the infiltration barrier.

12.3 THE DOUBLE DRAIN COVER

The essential feature of the Double Drain Cover, and the extent to which it differs from the Standard Cover, is that it incorporates a layer of random soil and an associated underlying drain. The drain is placed beneath the layer of random soil in order to shed water and to prevent the buildup of an hydraulic head over the infiltration barrier. The random soil is made thick enough to place the radon/infiltration barrier beneath the predicted depth of frost penetration. In the context of the UMTRA Project, protection of the infiltration barrier from damage by frost is the prime function of the layer of random soil.

As discussed previously, a layer of random soil is under consideration for the pile in Spain, but there the purpose would be to protect the infiltration barrier from the effects of excessive drying. As is true for the Standard Cover, the Double Drain Cover is susceptible to plant growth, and the performance assessments recommended for the Standard Cover should be undertaken for this cover. The zone of random soil will serve as a growth medium for deep-rooting plants. Damage to the radon barrier will occur only if the roots extend beneath the random soil into the moist, clay-rich soil of the radon barrier. A loose cobble biointrusion layer placed between the random fill and the radon barrier is one way to protect the radon barrier from root damage.

It is unlikely that the infiltration barrier of this cover will be unsaturated because the random soil will act as a sponge continually dripping water into the underlying drain; therefore, in calculating the water flux through the cover, it will be necessary to assume saturated conditions in the infiltration barrier. The saturated hydraulic conductivity of the soil of the infiltration barrier governs infiltration.

12.4 THE FULL COMPONENT COVER

Infiltration through the Full Component Cover is controlled by four mechanisms:

- o Evapotranspiration of precipitation by the plants and the soil.
- o The capillary barrier effect of the filtered or choked rock beneath the soil, which impedes drainage from the soil and holds the water until it is evapotranspired.
- o Lateral shedding of any seepage that percolates through the soil layer through the permeable drain and down the inclined slopes of the cell.
- o Impeded flow through the low permeability infiltration barrier and the radon barrier.

The extent to which each of these mechanisms operates at a given site depends on the site precipitation and evaporation patterns; the soils and vegetation on the cover; the relative gradations of the soil and underlying layers; the inclination of the cover; the hydraulic conductivity of the drain; and the hydraulic conductivity of the infiltration barrier.

Numerical or computer codes and models that may be used to analyze and quantify the performance of this type of cover include HELP and CREAMS. In general, we may conclude on the basis of logic alone that if the hydraulic conductivity of the infiltration barrier is about 1×10^{-9} cm/s (i.e., it incorporates a CLAYMAX layer), then the effective net infiltration or water flux through the cover is likely to be no greater than 1×10^{-9} cm/s. This is because the soil and vegetation will, under normal climatic conditions, evaporate and transpire the precipitation, and only at irregular intervals will water break through the soil to flow through the drain and potentially seep through the infiltration barrier. A well-designed soil cover will limit the frequency of water breakthrough to about once in five years. In addition, the drain of a well-designed cover will be sufficiently permeable to shed any water that does break through off the pile in a few days. Accordingly, the potential for saturated flow through the low permeability infiltration barrier is low, and certainly saturated flow conditions will occur for less than 365 days each year. Thus, the net infiltration is likely to be considerably less than the saturated hydraulic conductivity of the lowest permeability component of the infiltration barrier.

000030

13.0 TRANSIENT DRAINAGE

13.1 GENERAL

Immediately after construction of the disposal cell, the tailings and other contaminated materials may be wetter than they will be in the future. With time, the excess moisture initially in the tailings and contaminated materials will drain and the long-term or equilibrium moisture conditions will be established. The equilibrium moisture content may be less than the initial moisture content. The period between the completion of construction and the establishment of equilibrium moisture content and seepage conditions is considered to be the period of transient drainage.

If the disposal cell is remediated in such a way that the tailings are at their long-term moisture content at the end of construction, then there will be effectively no period of transient drainage at the site. If the tailings are wetter immediately after construction than they will be in the future, the length of the period of transient drainage will depend on the seepage rate from the disposal cell. In high-permeability, sandy tailings, the period of transient drainage may be short because the seepage rate is high. In very low permeability tailings, the period of transient drainage may continue for many years.

The seepage rate from the disposal cell during the period of transient drainage may exceed that which will occur under steady state conditions. If the transient seepage rate does not cause an exceedance of MCLs, or the applicable site groundwater protection standards at the point of compliance of the facility, the steady state or equilibrium conditions govern the choice of the disposal cell groundwater compliance strategy. If the transient seepage rate could cause an exceedance of MCLs, or applicable standards, appropriate technical approaches or groundwater compliance strategies must be adopted; for example, it may be necessary to dry the tailings before completion of the disposal cell, or a case for ACLs for transient drainage may have to be established. This section describes these and other possible technical approaches and groundwater compliance strategies to address transient seepage that could potentially cause an exceedance of MCLs or the applicable site groundwater protection standards.

13.2 REASONS FOR INITIAL EXCESS MOISTURE IN PILES

The initial moisture content of the tailings in an unremediated pile or a constructed disposal cell may be greater than their long-term moisture content for any of these reasons:

- Unrelocated tailings generally have a higher moisture content now than they will have in the future after pile remediation. The current high moisture content of unrelocated tailings is usually a result of hydraulic placement and subsequent uncontrolled

infiltration. The long-term moisture content will be less than it is currently because gravity-induced drainage will occur, and the limited infiltration resulting from the low permeability cover will keep the tailings dryer than they would be in the absence of a cover.

- When tailings are relocated, water is sprayed on them in order to control dust. Dust must be controlled to comply with state air quality standards and to protect the health of workers. The water sprayed on the tailings either evaporates or seeps into and through the tailings. In dry environments, the evaporation may be high enough to remove all sprayed water. In cooler climates, or if too much water is sprayed on the tailings, seepage to the groundwater could occur.

- Relocated tailings must be compacted. Uncompacted or insufficiently compacted tailings may eventually settle and cause the disposal cell cover to crack. To achieve specified densities, the moisture content of the tailings has to be within a few percent of the optimum moisture content. If the tailings are too wet before relocation, they must be dried prior to placement. If they are too dry before relocation, water must be added to achieve proper compaction. The moisture contents at which acceptable compacted densities are achieved may be greater than the long-term equilibrium moisture content, and the excess moisture will seep from the disposal cell until equilibrium is established.

13.3 A DETAILED EXPLANATION OF TRANSIENT DRAINAGE

Once the cover is placed on the disposal cell (containing either or both in-place or relocated tailings and contaminated material) the cover and materials in the cell will act as a system. Infiltration through the cover, flow through the tailings, and seepage from the base of the disposal cell will occur as shown in Figure 13.1.

Gravity-induced drainage will cause water to drain from the tailings. If the infiltration through the cover were zero, the tailings would equilibrate at a moisture content at which no more gravity-induced drainage could occur. In the proposed EPA groundwater protection standards, the term used for the long-term moisture content is "specific retention." The specific retention of the tailings is a measure of the water-retaining capacity of the tailings, or the water that will be retained in the voids of the tailings against the force of gravity. The specific retention may be defined quantitatively as the equilibrium gravimetric water content; i.e., the mass of water as a percentage of the mass of solids of the tailings after gravity-induced drainage. (Theoretically, gravity-induced drainage will continue asymtotically to a zero moisture content. For practical purposes, an approach similar to that adopted for settlement in geotechnical engineering, i.e., the 90 percent consolidation point, may be used.) In practice, it is not possible to place a cover that results in zero infiltration. There is inevitably a water flux through the cover.

000032

Seepage through the cover will continue on through the tailings. In order to maintain continuity, for steady state conditions the rate of seepage through the cover will equal the rate of infiltration through the cover. For the purposes of discussion, the equilibrium moisture content of the tailings is defined as the moisture content at which unsaturated hydraulic conductivity is equivalent to the water flux through the cover. If the specific retention moisture content is less than the equilibrium moisture content, the tailings will drain to the higher moisture content, i.e., the equilibrium moisture content. In such a case, the tailings will probably not drain to the specific retention. Conversely, if the specific retention is higher than the equilibrium moisture content, the tailings will probably drain to the specific retention. At that state, the hydraulic conductivity of the tailings will be greater than the water flux through the cover. The cover is the limiting factor. The tailings will act as a higher permeability drain beneath the lower permeability infiltration barrier. In very fine grained materials, such as slimes, it is possible the specific retention will be higher than the optimum placement moisture content. In such cases water will not drain from the tailings.

Hence, for the period less than the equilibrium time, i.e. during the period of transient drainage, water may drain from the tailings at a rate greater than the flux through the cover (as shown in Figure 13.1). At the equilibrium time or greater, the flux through the cover and the flux from the tailings are equal.

The water seeping from unrelocated or relocated tailings during the period of transient drainage and prior to the establishment of equilibrium or steady state conditions could result in an exceedance of the proposed EPA groundwater protection standards. The remainder of this section describes the technical approaches and groundwater compliance strategies that the DOE applies in order to balance the demands of safe construction and groundwater protection.

13.4 ANALYSIS OF TRANSIENT DRAINAGE

13.4.1 Stabilization in place

If the tailings will be stabilized in place, the analysis of transient drainage starts with a determination of the current in situ moisture content of the tailings. Next, it is necessary to establish by laboratory testing the relationship between the moisture content of the tailings and the partially saturated hydraulic conductivity. The long-term moisture content or specific retention must be determined. Conventional analyses of the steady state seepage through the disposal cell will be completed in order to establish the equilibrium or long-term moisture content of the materials in the disposal cell (including the cover, the tailings, contaminated materials, and possibly liners or their equivalents).

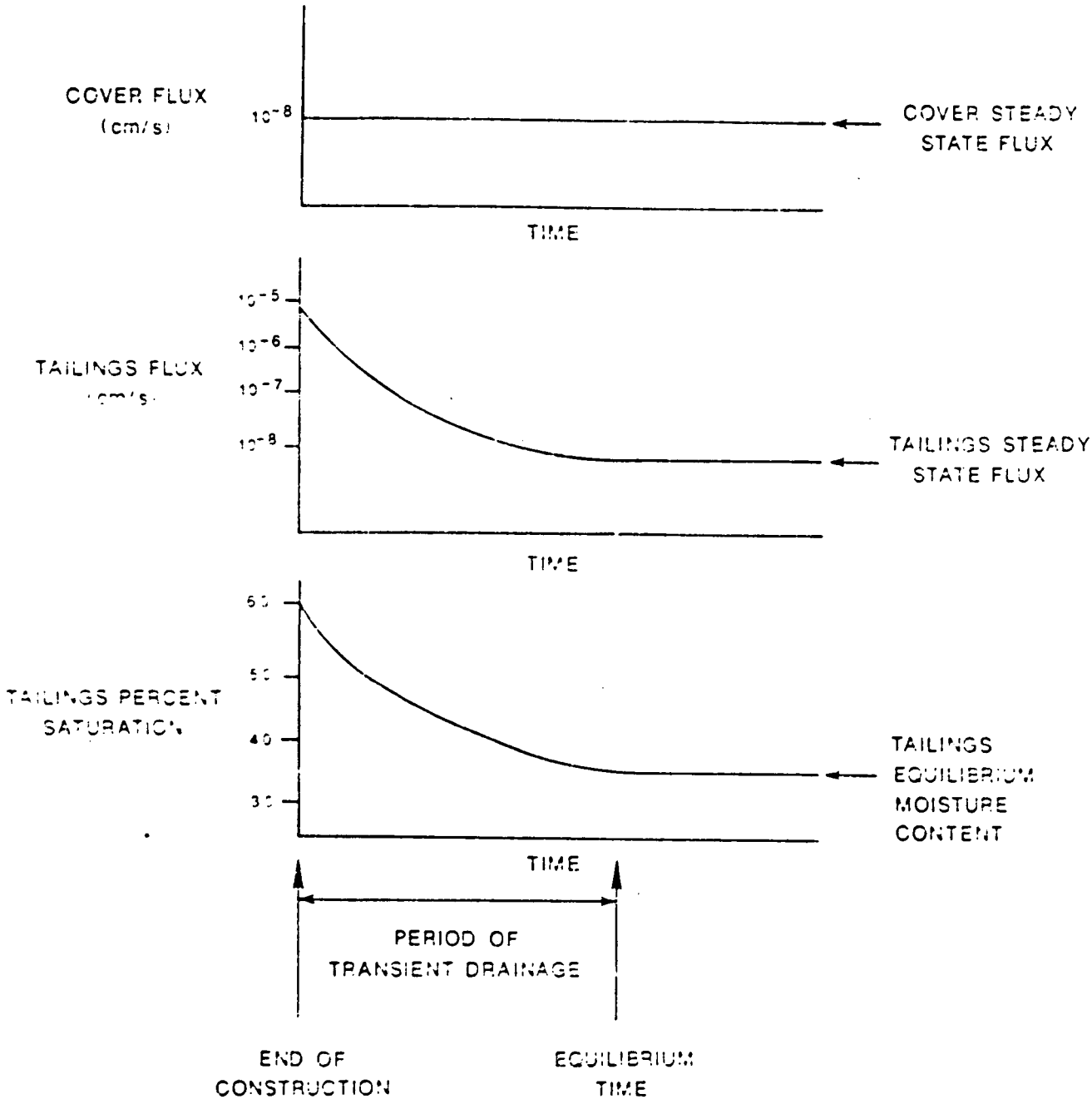

FIGURE 13.1
TRANSIENT AND STEADY STATE SEEPAGE THROUGH CELL COVER AND TAILINGS

With the above parameters and others that may be needed for a particular computer code, the rate and the period of steady state drainage may be calculated. Conventional computer codes such as UNSAT2, SUTRA, or SPLASHWT2 may be used. By evaluating the impact of the transient seepage from the base of the disposal cell on the groundwater beneath the site, the potential for exceeding the MCLs may be established. If the transient seepage rate is likely to cause an exceedance of the MCLs or the applicable site groundwater protection standards at the point of compliance, it will be necessary to adopt one or more of the technical or compliance strategy approaches discussed in Section 13.5.

3.4.2 Relocated tailings

If the tailings are relocated (both for pile stabilization in place and on site), water may be added to control dust and to achieve desired in-place densities. Precipitation on the uncovered tailings before placement of the cover may increase the placement moisture content of the tailings.

Tailings must be compacted to increase their density when placed in the disposal cell. If the tailings are too loose, i.e., their density is too low, they could undergo excessive settlement as a result of the stress resulting from placement of subsequent tailings and the disposal cell cover. Alternatively, loose tailings may undergo "hydrodynamic consolidation" or collapse settlement if they are wet after placement. Finally, loose tailings may liquefy in the event of a severe earthquake. Excess settlement or liquefaction could result in cover cracking, or other unacceptable disposal cell distress, deterioration, or failure.

In order to achieve proper compaction of tailings, the moisture content of the tailings must be at or close to the optimum moisture content. The optimum moisture content of a material is that moisture content at which, for a given compactive effort, the maximum density is achieved. Tailings such as slimes may be wetter in situ than their optimum moisture content and therefore will have to be dried prior to placement. Sandy tailings may be drier than their optimum placement moisture content, and it may be necessary to add water to them before compaction.

Tailings may be compacted into place dry or wet of the optimum moisture content. Practical construction moisture contents may be higher than the long-term equilibrium moisture content of the tailings.

In order to reduce the quantity of construction water seeping from the tailings, the tailings, when relocated, are placed at as dry a moisture content as is technically consistent with attaining densities that ensure the integrity of the disposal facility. The following test data should be obtained to calculate possible transient seepage from the tailings:

- o Compaction moisture density relationships.
- o The relationship between the moisture content and the partially saturated hydraulic conductivity.
- o The long-term equilibrium or gravity-induced drainage moisture content of the tailings.
- o The collapse potential of tailings as a function of placement density.

At some sites it may be possible to limit the placement percent saturation of the tailings so that the unsaturated hydraulic conductivity is similar to that of the cover; see Section 13.6 for a description of possible technical and compliance approaches. If this is not possible, transient tailings drainage will be modeled to determine what percent saturation will allow compliance with MCLs or applicable groundwater protection standards.

To assure that the required moisture content in the contaminated material is achieved during construction, the placed tailings must be monitored. Instruments are available which can be inexpensively installed and which provide instantaneous determination of soil moisture. By monitoring instruments installed in the tailings pile as construction proceeds, the contractor can control moisture added to specified tolerances. Direct measurement of water used for construction is not appropriate because it is not possible to determine how much infiltrates and how much is lost to evaporation.

It is possible that during construction of a disposal cell which incorporates relocated tailings the moisture content at the end of construction may, in spite of the best efforts of all concerned, exceed the moisture content at which transient drainage will not cause an exceedance of MCLs or background. In such a case it may be necessary to reevaluate the technical solution and the groundwater compliance strategy for the facility. In practice, there is no difference between such a situation and the situation of a pile stabilized in place that has an unacceptably high initial moisture content. Accordingly, such situations may be evaluated and dealt with according to the procedures described in this section for piles stabilized in place.

000036

13.5 TECHNICAL AND COMPLIANCE APPROACHES FOR PILES STABILIZED IN PLACE

At sites where the tailings are to be stabilized in place (and possibly also where excess water has been added during relocation), part or all of the tailings may be at moisture contents higher than the long-term equilibrium moisture content. The excess moisture will drain from the pile at a rate that may exceed the equilibrium seepage rate. If the transient seepage could lead to an exceedance of the groundwater protection standards at the point of compliance of the facility, one or more of the following technical approaches may be adopted to reduce the moisture content of the pile and hence to achieve MCLs or the appropriate site standards during the period of transient drainage:

- o Change the pile remedial action plan, and relocate the tailings to another site.
- o Alter the in situ moisture content of the tailings by artificially induced drainage (using well points, horizontal drains, or electro-osmosis, for example).
- o Pick up and dry the tailings to a moisture content consistent with their long-term equilibrium condition.

As an alternative to or in addition to implementing one or more of the above technical approaches, the DOE may elect to adopt one of the following groundwater compliance strategies for the disposal cell and the site:

- o Treat as a surveillance and maintenance issue; i.e., monitor transient water quality to confirm the dissipation of excess constituents and the development and persistence of steady state or equilibrium conditions.
- o Apply supplemental standards, where appropriate; i.e., groundwater is Class III.
- o Apply for ACLs for the period of transient drainage of construction water and water already in the pile.
- o Remediate contaminants, which seep in the transient phase from the disposal cell, as part of aquifer restoration.
- o Defer compliance with the groundwater standards until all transient conditions have ended.

13.6 CONSTRUCTION WATER FOR RELOCATED TAILINGS

Control of dust while relocating tailings is essential. Dust must be controlled to comply with air quality regulations and to protect worker health. Dust control is best achieved by spraying water onto working surfaces. The DOE intends to minimize the spraying water to the extent achievable consistent with dust control.

If possible, non-aqueous dust suppressants will be used. Investigations of the potential applicability of commercial products will be undertaken. In general, such products are expensive, of limited effectiveness, and may in themselves lead to additional contamination.

Design and construction methods and specifications that discourage the use of excess construction water for dust control, and which are adopted as appropriate by the DOE, include:

- o Stop construction when the weather is dry, evaporation high, or conditions are otherwise likely to lead to a situation where excessive water is required to control the dust.

- o Limit the working area open at any one time; hence limit the area that is a source of dust or that requires watering to control dust. Cover other areas with non-aqueous dust suppressants or geomembranes.

- o Moisture condition the tailings at the source so that they are in the moisture range where compaction can be achieved. This will serve to limit the amount of water available in the pile for deep percolation and aid in dust control during transport and spreading.

- o Measure the in situ moisture content of a layer after placement of subsequent layers in order to confirm that dust control spraying has not increased the moisture content of the previously placed, drier layer.

- o Limit spraying to control dust, and require workers to wear respirators to protect them from the potential deleterious effects of dust.

- o Apply for a relaxation of applicable air quality standards. If this approach is appropriate and feasible, the DOE will work with the state and local authorities to obtain air quality permits that incorporate an appropriate level of suspended solids and which take into account site constraints and regulatory requirements.

One or more of the above approaches may be implemented as required at particular UMTRA Project sites. Site-specific remedies will be adopted to meet site-specific conditions.

In order to limit the amount of water that will be applied to achieve compaction during relocation of the tailings, the DOE will either:

- o Specify compaction according to a methods procedure. This will involve specifying only the lift thickness, the type of compaction equipment, and the number of passes. In that the end density is not specified, the contractor has no incentive to add water to reduce the amount of compaction to achieve a specified density. Trial placement sections will be monitored at the start of

000038

construction to confirm or provide data to make a change in the method specification. This approach is likely to be applicable where the tailings are sandy.

- Specify a placement density and acceptable moisture content range that will result in acceptable densities and at-completion moisture contents that will not cause transient seepage likely to exceed appropriate acceptable groundwater contaminant loadings. This solution is more likely to be applicable where the tailings contain large percentages of slimes.

In order to minimize the potential for precipitation on the uncovered tailings increasing the as-placed moisture content, the following technical approaches may be adopted by the DOE:

- Place construction surfaces at as steep an inclination as practical.
- Make all practical provisions to direct water off the tailings as rapidly as possible.
- If tailings placement is below grade, have pumps available to remove precipitation runoff during and after the storm or snowmelt.
- Provide a geomembrane of sufficient size to cover the exposed placement area in the event of impending precipitation.

13.7 LINERS

The proposed EPA groundwater protection standards require that relocated tailings placed wet of their specific retention be underlain by a liner or equivalent. The understanding of the DOE is that the liner requirement is intended to deal specifically with the situation that would arise if the tailings were to be slurried for transport and then deposited at the new site by hydraulic fill techniques. The DOE does not plan to do this at any sites; therefore, the liner requirement does not apply.

In addition, the DOE does not consider that it is technically effective, prudent, or legally possible to place a liner beneath relocated tailings to control seepage of construction water. Reasons for this opinion are:

- The use of geomembrane liners is not possible because they cannot be demonstrated to last for the facility design life.
- The use of natural materials, such as bentonite or bentonite-ammended soils, will not improve the long-term performance of the disposal facility: the operative flux through the liner will equal or exceed the flux through the cover, as the low permeability

element in both is the unsaturated hydraulic conductivity of partially saturated soil, bentonite, or bentonite-ammended soil, and both elements will have essentiallv the same hydraulic conductivity.

- Use of bentonite in a liner could, unless appropriate design details are adopted, induce slope instability in the cell. Bentonite is a low-strength material, and the layer incorporating it could constitute a potential slip or failure plane. The design details required to prevent slope in stability include stabilizing dikes and berms. Such features could significantly increase the cost of remedial action.

- Theoretically, moisture impounded by the liner would be slowed in seeping from the disposal cell; the increased residence time in the cell could increase the concentration of ultimate releases from the cell.

- Failure of the liner could concentrate moisture releases from a part of the disposal cell; this could contribute to unpredictable releases and migration paths.

- A successful liner in a cell designed for slope stability that does not incorporate drains will inevitably fail because of the "bathtub" effect.

- If a successful liner is installed and water is collected at drains leading from the cell, it will be necessary to perpetually treat the drainage water, for if that is not done, the drainage water will inevitably flow to surface or groundwaters or evaporate, leaving behind unacceptable salts.

The DOE may construct a liner equivalent at a site. Such liner equivalents have been called buffer zones, foundation preparation layers, or clean fill initial placement layers. The DOE considers that the natural soil and rock beneath the disposal cell and above the site groundwater table may be considered a liner equivalent if it is possible to show that these intervening natural materials will act to control seepage from the disposal facility, and will aid in achieving the specified groundwater protection standards at the point of compliance of the disposal cell.

000000

14.0 IMPACT OF STANDARDS ON ALL SITES

14.1 SPECIAL STUDY IMPLICATIONS TO CELL DESIGN

Table 14.1 summarizes the impact that the engineering special studies have had on the UMTRA Project disposal cell design. Shown on the table for each study is whether or not the positive findings from the study have been incorporated into the design of the site cell and cover. In general, it is believed that the data indicate the significant impact of the studies on cell and cover designs. Table 14.2 shows the impact of the special studies specifically related to groundwater hydrology on the formulation of remedial action plans and groundwater compliance strategies at each UMTRA Project site. The impact of the findings of the special studies has been significant, and the resultant improvements or changes in disposal cell design have been positive in all respects. Site-by-site descriptions are provided in the next section.

14.2 SITE-SPECIFIC ANALYSIS

Table 14.3 lists the site remedial action plan and the type of cover for each site. Table 14.4 shows for each site which of the Checklist Cover components are incorporated in the cover at each site. Table 14.5 lists for each site some pertinent site facts, such as elevation and climate. The following is a summary of the impact of the proposed EPA groundwater protection standards on all UMTRA Project sites. Technical details of the cell and cover designs for selected sites are discussed in the next section.

- Ambrosia Lake (NM): The hydraulic conductivity of the filter has been increased. This does not result in a significant cost increase. Increasing the filter permeability and controlling the hydraulic conductivity reduces seepage from the cell to the extent that, for steady state conditions, MCLs result at the point of compliance.

- Belfield/Bowman (ND): The cover thickness has been increased to provide frost protection at a cost of about $400,000.

- Cannonsburg (PA): No impact, as the disposal cell was complete before the standards were proposed.

- Durango (CO): The cover has been significantly altered--see next section for a detailed discussion of the changes.

- Falls City (TX): Detailed evaluations have not been completed, but it is anticipated that significant cell and cover design changes will have to be made to achieve compliance with the proposed EPA groundwater protection standards.

- Grand Junction (CO): A new cover design was formulated--see next section for details.

Table 14.1 Application of special study findings at specific sites: impact on cell design

Site	Geomembrane	Alternate cover materials	Alternate cover design	Freeze/ thaw	Vegetation
Ambrosia Lake	N	Y	N	N	
Belfield/Bowman	N	N	Y	Y	Y
Canonsburg		NA			
Durango	N	Y	Y	Y	Y
Falls City	N	N	Y	N	Y
Grand Junction	Y	Y	Y	Y	Y
Gunnison	N	Y	Y	Y	Y
Green River	N	N	Y	Y	N
Mexican Hat	N	N	N	N	N
Lakeview	N	N	Y	N	N
Lowman	N	N	N	N	N
Maybell		TBD			
Monument Valley		NA			
Naturita	N	Y	Y	Y	Y
Rifle	N	N	Y	Y	N
Shiprock		NA			
Slickrock	N	N	Y	Y	N
Spook	N	N	N	N	N
Salt Lake City		NA			
Tuba City	N	N	Y	N	N
Riverton		NA			

GEOMEMBRANE
N - A geomembrane not considered or proposed at the site.
Y - A geomembrane considered for the site.

ALTERNATE COVER MATERIALS
N - CLAYMAX not likely to be incorporated into cover.
Y - CLAYMAX likely to be incorporated into cover.

ALTERNATE COVER DESIGN
N - Increased permeability drain not required.
Y - Permeability of the drain to be increased.

FREEZE/THAW
N - Additional material for freeze/thaw protection not required.
Y - Additional material for freeze/thaw protection required.

VEGETATION
N - Vegetation not likely to be used at the site.
Y - Vegetation likely to be used at the site.

GENERAL TERMS
TBD - To be determined
NA - Not applicable

CAVEAT: The design details shown in this table may change in response to the EPA groundwater protection standards and/or compilation of final design.

000092

Table 14.2 Application of groundwater special studies at specific sites

Site	Radon barrier moisture content	Geochemical modification	Source modification	Aquifer restoration
Ambrosia Lake	Y	N	N	NA
Belfield/Bowman	N	N		NA
Canonsburg	NA			
Durango	N	N	N	C
Falls City	N	P	N	NA
Gunnison	N	N	N	C
Grand Junction	Y	N	N	CD
Green River	Y	P	N	NP
Mexican Hat	Y	N	N	N
Lakeview	N	N	N	NA
Lowman	N	N	N	NA
Maybell	TBD			
Monument Valley	NA			
Naturita	Y	TBD	TBD	C
Rifle	N	N	N	C
Riverton	NA			
Shiprock	NA			
Slickrock	Y	TBD	N	C
Spook	N	N	N	NA
Salt Lake City	NA			
Tuba City	Y	N	N	NA

RADON BARRIER MOISTURE CONTENT
N - Partially saturated argument not used at this site.
Y - Results of study used to support partially saturated argument at specific site.

GEOCHEMICAL MODIFICATION
N - Not used because not possible or not needed to achieve standards.
P - Possible or feasible but too expensive for implementation. Also not required for standard compliance.

SOURCE MODIFICATION
N - Not used because not required or not technically practical.

AQUIFER RESTORATION
NA- Not applicable because of construction constraints.
C - Considered, refer to Section 3.10 where we conclude that there are no sites at which it is possible to begin aquifer restoration (i.e., Subpart B compliance) concurrently with or as part of Subpart A remedial action construction.

GENERAL TERMS:
TBD - To be determined, final decision yet to be made. Analysis in progress.
NA - Not applicable.

CAVEAT: The design details shown in this table may change in response to the EPA groundwater protection standards and/or compilation

000003

Table 14.3 Site Remedial Action Plans

Site	Remedial action	Disposal cell cover type: top cover	Disposal cell cover type: sideslope
Ambrosia Lake	SIP	STA	STA
Belfield/Bowman	SIP and relocate	DD	DD
Burrell	SIP	STA	STA
Canonsburg	SIP	STA/V	STA/V
Durango	Relocate	FC	DD
Falls City	SOS	TBD	TBD
Grand Junction	Relocate	FC	STA
Green River	SOS	STA	STA
Gunnison	Relocate	FC	CD
Lakeview	Relocate	STA	STA
Lowman	SOS	STA	STA
Maybell	SIP	TBD	TBD
Mexican Hat/ Monument Valley	SIP and relocate	STA	STA
Naturita	Relocate	FC	TBD
Rifle	Relocate	DD	DD
Riverton	Relocate Title II	N/A	N/A
Salt Lake City	Relocate	STA	STA
Shiprock	SIP	STA	STA
Slick Rock	SOS	STA	STA
Spook	SIP		PIT FILL
Tuba City	SIP	STA	STA

SIP - Stabilize in place.
SOS - Stabilize on site.
Relocate - Stabilize at a location removed from the processing site.
STA - Standard.
FC - Full component.
DD - Double drain.
CD - Clean dike.
/V - With vegetation.
TBD - To be determined.
N/A - Not applicable.

CAVEAT: The design details shown in this table may change in response to the EPA groundwater protection standards and/or compilation of final design.

000034

Table 14.4 Site cover checklist components

Site	Checklist cover components							
	Vegetation	Rock erosion	Rooting medium	Frost protection	Biointrusion barrier w/choked rock	Drain	Infiltration barrier-Claymax	Radon barrier
Ambrosia Lake	N	Y	N	I	EB	Y	N	Y
Belfield/Bowman	N	Y	N	Y	EB	Y	N	Y
Burrell	N	Y	N	I	EB	Y	N	Y
Canonsburg	Y	N	N	I	EB	Y	Y	Y, WB
Durango	Y/N	N/Y	Y/N	Y	Y/EB	Y	Y/N	Y, S-WB
Falls City	Y/N	N/Y	Y/N	N	N/EB	Y	Y/N	Y
Grand Junction	Y/N	N/Y	Y/N	Y	Y/EB	Y	Y/N	Y
Green River	N	Y	N	I	EB	Y	N	Y, WB
Gunnison	Y/N	N/Y	Y/N	Y	Y/EB	Y	Y/N	Y
Lakeview	Y	Y	Y	N	EB	N	N	Y
Lowman	N	Y	N	N	EB	Y	N	Y
Maybell	TBD	TBD	TBD	TBD	TBD	TBD	TBD	TBD
Mexican Hat/ Monument Valley	N	Y	N	I	EB	Y	N	Y, WB
Naturita	TBD	TBD	TBD	TBD	TBD	TBD	TBD	TBD
Rifle	N	Y	N	Y	EB	Y	N	Y
Riverton	NA	NA	NA	NA	NA	NA	NA	NA
Salt Lake City	N	Y	N	I	EB	Y	N	Y
Shiprock	N	Y	N	I	EB	Y	N	Y
Slick Rock	N	Y	N	I	EB	Y	N	Y
Spook	N	N	N	I	N	Y	N	Y
Tuba City	N	Y	N	I	EB	Y	N	Y

Y - Yes, used.
N - No, not used.
Y/N - Where only one symbol is given, it refers to both topslope and sideslope details, which are essentially the same. Where top and sideslope details are different, the topslope detail is noted first, and following the /, the sideslope detail is given.
I - No specific frost protection layer; thickness of existing cover affords required frost protection
TBD - To be determined.
WB - Radon barrier will be amended with bentonite.
S-WB - Sideslope radon barrier will be amended with bentonite.
NA - Not applicable (site has been relocated to a Title II site).
EB - Biointrusion protection provided by erosion barrier rock.

CAVEAT: The design details shown in this table may change in response to the EPA groundwater protection standards and/or compilation of final design.

000035

F2418

Table 14.5 Site climatological characterization data

Site	Elevation (feet) disposal site	Elevation (feet) weather station	Average annual precipitation (inches/year)	Average annual pan evaporation (inches/year)[a]	Average annual temperature (°F)	Average snowfall (inches/year)
Ambrosia Lake	6980	7750	9	85	53	24[a]
Belfield/Bowman	2565	2980	16	53	43	34
Burrell	980	1407	44	39	50	45
Canonsburg	960	1407	37	39	50	45
Durango (Bodo Canyon)	7100	6600	19	55	47	60[a]
Falls City	450	300	29	80	70	<1
Grand Junction (Cheney Reservoir)	5260	4849	12	52	53	27
Green River	4070	4070	6	60	52	10
Gunnison (Landfill)	8040	7664	11	45	39	58
Lakeview (Collins Ranch)	4950	4764	16	60	46	61
Lowman	3950	3920	24	45	44	93
Maybell	6220	5908	13	47	42	81
Mexican Hat/ Monument Valley	4300	4120	6	70	55	3
Naturita (Dry Flats)	5930	5785	11	55	50	31
Rifle (Estes Gulch)	6150	5320	11	50	47	41
Riverton	4950	4950	9	60	44	36
Salt Lake City (Clive)	4280	4237	5	60	52	36[a]
Shiprock	4960	4870	6	68	52	4
Slick Rock	5510	5785	7	55	50	31
Spook	5100	5338	11	60	40	74
Tuba City	5070	4980	6	80	55	4

[a] NOAA, 1979.

Note: All other data were obtained from site-specific NEPA documents.

- Green River (UT): The cover design has been altered by providing frost protection and a high permeability filter, and adding sodium bentonite to the radon/infiltration barrier to reduce its permeability. The estimated additional cost of these measures is about $100,000. Because of these changes, MCLs are achieved at the point of compliance of the pile.

- Gunnison (CO): The tailings are to be relocated to a new site where the constrained cell cover will be constructed with a very low permeability--see next section for details.

- Mexican Hat (UT): No significant changes, except that the pile will now incorporate material from Monument Valley.

- Lakeview (OR): No significant changes.

- Maybell (CO): No evaluation of the design changes required to comply with the EPA groundwater protection standards has yet been made. The DOE currently anticipates ACLs may be required at this site to achieve compliance with the proposed standards. Detailed alternative design evaluations to assess the possibility or cost of achieving MCLs have not yet been undertaken.

- Monument Valley (UT): Tailings will be relocated to and codisposed with the Mexican Hat tailings.

- Naturita (CO): The constrained cell design will probably be adopted although comparative design evaluations are in progress.

- Rifle (CO): A frost protection layer costing about $2.0 million will be added to the cover.

- Shiprock (NM): No change, as remedial work was complete before the standards were proposed.

- Slick Rock (CO): Detailed design reevaluations have not been undertaken, although it appears likely a frost protection layer will have to be added at a cost of about $125,000. The need for cover design changes to achieve MCLs has yet to be determined.

- Spook (WY): The remedial action consists of placing the tailings in the adjacent open pit, which will be filled with overburden. Because of the existing quality of the groundwater at the site, the compliance strategy is the application of supplemental standards.

- Salt Lake City (UT): No change, as construction was almost complete at the time the standards were proposed.

- Tuba City (AZ): The infiltration barrier will be placed at an hydraulic conductivity of 1×10^{-8} cm/s. To confirm the feasibility of this, a test pad was constructed.
- Riverton (WY): No effect, as the tailings are being relocated to a Title II facility.

- Lowman (ID): A frost protection layer may be added at a cost of $100,000.

14.3 COST IMPLICATION

The most significant impact on disposal cell designs at individual UMTRA Project sites has been on the cover. The single most significant impact on cover design has been the realization that it is imperative to protect the infiltration barrier from freezing, and hence to maintain its low permeability and its ability to comply with the proposed EPA groundwater protection standards in the future. The estimated total cost increase to the UMTRA Project as a result of providing frost protection is about $10 million.

Relocation of the Monument Valley tailings will cost about $10 million more than stabilization on the site in accordance with the design formulated before the appearance of the proposed EPA groundwater protection standards.

Precise comparative figures for the increased cost of more complex covers at sites like Durango and Grand Junction are not available. It is, however, not unreasonable to put the increased cost at about $1.0 million per site. The likely increased cost of new cover designs at Gunnison, Falls City, Naturita, and Maybell has not been evaluated, but again a rough estimate of $1.0 million per site is not unreasonable. The cost impact of the proposed EPA groundwater protection standards is a direct construction cost of between $20 and $30 million. In practice, overhead and other design, management, and administrative costs will result in an ultimate cost about double the direct construction cost. Hence the total cost increase for Subpart A compliance (disposal cell design and construction) to comply with the EPA groundwater protection standards could be as much as $60 million.

The cost of Subpart A compliance may increase because one or more of the following design or construction changes are required to obtain NRC concurrence:

- Stringent tailings placement to reduce post-construction moisture contents.
- Construction of buffer zones to meet the requirement for a liner or equivalent.
- Reworking of tailings to reduce their moisture content prior to stabilization in place.
- Additional bentonite (or CLAYMAX) for infiltration control if partial saturation of the radon barrier is not acceptable as a way to reduce its permeability.

000098

- Rock mulches or extensive soil modification to provide extreme conservatism against erosion of vegetated soil surfaces.
- Hydrogeochemical modification to enhance MCL achievement.
- Partially saturated flow monitoring to demonstrate disposal cell performance.

15.0 CASE HISTORIES

15.1 GRAND JUNCTION

Figure 15.1 shows the design of the proposed cover for the disposal cell at Cheney Reservoir, the site to which the tailings and contaminated materials from Grand Junction will be relocated. This design has been proposed to the NRC, and discussions with them about its acceptability continue.

The topslope cover incorporates most of the elements of the Checklist Cover. Soil and vegetation are the primary infiltration barriers, augmented by a CLAYMAX mat placed above the radon barrier. Beneath the soil is a filtered biointrusion barrier and beneath that is a drain of clean sand. The radon barrier consists of compacted silts and clays. The slope of the top surface is two percent, which is considered just sufficient to promote shedding of water that may enter the drain above the CLAYMAX in the rare event of seepage from the soil. A significant factor affecting the choice of the relatively flat topslope is the need to minimize the potential for erosion of the soil. Geomorphological evidence indicates that slopes of that inclination are unlikely to experience gully development during the design life of the pile. Site data to substantiate this have been submitted to the NRC. An erosion base level consisting of a perimeter crest dike of erosion resistant rock is also proposed. The only potential additional feature to control erosion would be erosion control dikes as shown in Figure 10.1. These would be easy to build; however, because of the need for extraordinary quality and control on the UMTRA Project they will be expensive to build.

Rock, not soil, is the uppermost component of the sideslope. Because of the very small amount of water that will flow off the topslope, the sideslope radon barrier will probably be partially saturated. Hence, its operative hydraulic conductivity will be very low (less than the saturated hydraulic conductivity of about $1x10^{-7}$ or $1x10^{-8}$ cm/s at which it would be placed.) Because of the anticipated low permeability of the radon barrier, it will double as the sideslope infiltration barrier, and CLAYMAX will not be used there. Frost protection is provided on the sides by ensuring that at least one foot of the radon barrier is below the calculated depth of frost penetration.

15.2 GREEN RIVER

At Green River the tailings are to be stabilized on the site and placed partially in an excavation and partially above-grade. The upper section of Figure 15.2 shows a typical cross section along the perimeter of the cell.

000100

APPENDIX A

REGULATORY BACKGROUND AND DETAILS OF EPA STANDARDS

DOE (U.S. Department of Energy), 1988i. "Aquifer Restoration and Decoupling Special Study," UMTRA-DOE/AL-400650.000, DOE UMTRA Project Office, Albuquerque Operations Office, Albuquerque, New Mexico.

DOE (U.S. Department of Energy), 1988j. "Sodium-Amended Radon Barriers Special Study," UMTRA-DOE/AL-400651.000, DOE UMTRA Project Office, Albuquerque Operations Office, Albuquerque, New Mexico.

DOE (U.S. Department of Energy), 1988k. "ACLs and Supplemental Standards Special Study," UMTRA-DOE/AL-400652.000, DOE UMTRA Project Office, Albuquerque Operations Office, Albuquerque, New Mexico.

Gee, G.W., 1987. "Recharge at the Hanford Site: Status Report," PNL-6403/UC-70, Pacific Northwest Laboratories, Richland, Washington.

Hakonson, T. H., 1986. "Evaluation of Geologic Materials to Limit Biological Intrusion into Low-Level Radioactive Waste Disposal Sites," LA-10286-MS/UC-70B, Los Alamos National Laboratories, Los Alamos, NM.

Heede, B.H., 1976. "Gully Development and Control," USDA Forest Service Research Paper RM-169, U.S. Department of Agriculture, Fort Collins, Colorado.

Miller, L.L. and Davis, L.A., 1987. "Hydrogeology Aspect of Reclamation of the Ray Point Tailings Facility," in Geotechnical and Geohydrologic Aspects of Waste Management, Lewis Publishers, Inc., Chelsa, Michigan.

Mitchell, J.K., 1976. Fundamentals of Soil Behavior, John Wiley & Sons, Inc, New York.

NOAA (National Oceanic and Atmospheric Administration), 1979. "Climatic Atlas of the United States," U.S. Department of Commerce.

NRC (U.S. Nuclear Regulatory Commission), 1986. "Standard Review Plan."

Shepherd, T.A. and Abt, S.R., 1987. "A Comparison of Reclamation Plans at Title I and Title II Uranium Mill Tailings Sites," presented orally at an ASCE Conference, written copies available from Water, Waste & Land, Inc., 2629 Redwing Road, Suite 200, Fort Collins, Colorado, 80526.

066402

1.0 LEGISLATIVE BACKGROUND

In response to public concern over uranium mill tailings and the associated contaminated material left abandoned or otherwise uncontrolled at inactive processing sites throughout the United States, Congress passed the Uranium Mill Tailings Radiation Control Act of 1978 (UMTRCA), Public Law 95-604, which was enacted into law on November 8, 1978. Congress directed the Secretary of Energy to designate and remediate designated sites. Twenty-two sites were designated and included in the resultant Uranium Mill Tailings Remedial Action (UMTRA) Project controlled by the U.S. Department of Energy (DOE).

Pursuant to the requirements of the UMTRCA, the U.S. Environmental Protection Agency (EPA) on January 5, 1983, promulgated health and environmental standards to govern cleanup, stabilization, and control of residual radiological and non-radioactive materials at inactive uranium mill tailings sites (40 CFR Part 192). The promulgated standards establish requirements for long-term stability, radiation protection, and provide procedures for ensuring the protection of groundwater quality.

In developing the standards, the EPA, following the lead given by Congress, determined "that the primary objective for control of tailings should be isolation and stabilization to prevent their misuse by man and dispersal by natural forces such as wind, rain, and flood waters" and that a secondary objective should be "to reduce radon emissions from tailings piles." A third objective should be "the elimination of significant exposure to gamma radiation from tailings piles" (Ref. 48FR590, January 5, 1983). These conclusions were based on a determination that the most significant public health risks associated with inactive tailings were posed by exposure to people living and working in structures contaminated by tailings. The EPA further concluded that the potential for contamination of groundwater and surface water should be evaluated on a site-specific basis. The EPA standards are discussed in the following paragraphs and are summarized in Table A.1.1

TABLE OF CONTENTS

Section	Page
1.0 Legislative Background	A-1
2.0 Long-Term Stability	A-3
2.1 Radon emissions control	A-3
2.2 Water quality protection	A-4

LIST OF TABLES

Table	Page
A.1.1 EPA Standards	A-2

2.0 LONG-TERM STABILITY

Congress specifically stated they wanted a long-term, permanent control of the tailings and contaminated materials. Accordingly, isolation and stabilization of tailings in order to prevent misuse by man and dispersal by natural forces are the primary objectives of the EPA standards. Accordingly, long-term stability was emphasized in the development and promulgation of the standards. This is consistent with the guidance provided by the legislative history of the UMTRCA, which stresses the importance of avoiding remedial actions which would be effective only for a short period of time and which would require future Congressional consideration.

Also because Congress wanted a long-term solution, the EPA standard-setting process distinguished "passive controls" such as thick earthen covers, below-ground disposal, rock covers, and massive earth and rock dikes, from "active controls" such as semi-permanent covers, warning signs, and restrictions on land use. Active controls could be expected to need frequent replacement or other major repairs requiring the appropriation and expenditure of public funds. In setting the standards, the EPA called for designs which rely primarily on passive controls.

The first objective of the standards is a longevity requirement, which recognizes the difficulty of predicting long-term performance with a high degree of confidence. In establishing the longevity requirement, the EPA concluded that existing knowledge permits the design of control systems that have a good expectation of lasting at least 1000 years. Therefore, a design objective of 1000 years was established to be satisfied whenever reasonably achievable, but in any case, a minimum performance period of 200 years must be achieved.

The standards recognize the need for institutional controls such as custodial maintenance, monitoring, and contingency response measures. In its preamble to the standards, the EPA calls for such controls to be provided as an essential backup to the primary, passive controls.

2.1 RADON EMISSIONS CONTROL

The EPA identified a reduction of radon emission from tailings piles as the second objective in its standards for the control of tailings.

In establishing the radon standard, the EPA determined that the emission limitation could be achieved by well-designed earthen covers and that such control techniques would be compatible with the requirements of the EPA longevity requirement.

PART 192 - HEALTH AND ENVIRONMENTAL PROTECTION STANDARDS FOR URANIUM MILL TAILINGS

SUBPART A - Standards for the Control of Residual Radioactive Materials from Inactive Processing Sites

192.02 Standards

Control shall be designed to:

(a) Be effective for up to one thousand years, to the extent reasonably achievable, and, in any case, for at least 200 years, and,

(b) Provide reasonable assurance that releases of radon-222 from residual radioactive material to the atmosphere will not:

(1) Exceed an average release rate of 20 picocuries per square meter per second, or
(2) Increase the annual average concentration of radon-222 in air at or above any location outside the disposal site by more than one-half picocurie per liter.

SUBPART B - Standards for Cleanup of Land and Buildings Contaminated with Residual Radioactive Materials from Inactive Uranium Processing Sites

192.12 Standards

Remedial actions shall be conducted so as to provide reasonable assurance that, as a result of residual radioactive material from any designated processing site:

(a) The concentration of radium-226 in land averaged over any area of 100 square meters shall not exceed the background level by more than -

(1) 5 pCi/g, averaged over the first 15 cm of soil below the surface, and
(2) 15 pCi/g, averaged over 15 cm thick layers of soil more than 15 cm below the surface.

(b) In any occupied or habitable building -

(1) The objective of remedial action shall be, and reasonable effort shall be made to achieve, an annual average (or equivalent) radon decay product concentration (including background) not to exceed 0.02 WL. In any case, the radon decay product concentration (including background) shall not exceed 0.03 WL, and
(2) The level of gamma radiation shall not exceed the background level by more than 10 microroentgens per hour.

SUBPART C - Implementation (condensed)

192.20 Guidance for Implementation

Remedial action will be performed with the concurrence of the Nuclear Regulatory Commission and the full participation of any state that pays part of the cost and in consultation as appropriate with other government agencies.

192.21 Criteria for Applying Supplemental Standards

The implementing agencies may apply standards in lieu of the standards of Subparts A or B if certain circumstances exist, as defined in 192.22.

192.22 Supplemental Standards

"Federal agencies implementing Subparts A and B may in lieu thereof proceed pursuant to this section with respect to generic or individual situations meeting the eligibility requirements of 192.21."

(a) ". . .the implementing agencies shall select and perform remedial actions that come as close to meeting the otherwise applicable standards as is reasonable under the circumstances."

(b) ". . .remedial actions shall, in addition to satisfying the standards of Subparts A and B, reduce other residual radioactivity to levels that are as low as is reasonably achievable."

(c) "The implementing agencies may make general determinations concerning remedial actions under this Section that will apply to all locations with specified characteristics, or ~~they may make a determination for a specific location when remedial actions are~~ proposed under this Section for a specific location, the Department of Energy shall inform any private owners and occupants of the affected location and solicit their comments. The Department of Energy shall provide any such comments to the other implementing agencies [and] shall also periodically inform the Environmental Protection Agency of both general and individual determinations under the provisions of this section."

Ref: Federal Register, Volume 48, No. 3, January 5, 1983, 40 CFR Part 192.

TABLE A.1.1
EPA STANDARDS

000106

These items are discussed below.

Subpart A (40 CFR Part 192.01-192.02) consists of the requirements for control of potential contaminant releases to the groundwater at disposal sites. It incorporates the following:

- The RCRA list of hazardous constituents (40 CFR Part 264.93).
- Concentration limits, including Maximum Concentration Limits (MCLs) (40 CFR Part 264.94), background limits, or Alternate Concentration Limits (ACLs). The establishment of ACLs must be concurred in by the U.S. Nuclear Regulatory Commission (NRC), be as low as reasonably achievable (ALARA), and satisfy the water-quality protection consideration stipulated in 40 CFR 264.94(b).
- Point of compliance (40 CFR Part 264.95).
- Four hazardous constituents and associated MCLs (molybdenum, radium, uranium, and nitrate) are added to those taken from the EPA Primary Drinking Water Standards. (Note: an MCL for an additional constituent, gross alpha activity, is included separately and without discussion in Subpart A, Table A.)
- A liner or equivalent beneath the disposal site if tailings contain water in excess of their specific retention (40 CFR Part 192.20).
- Monitoring during a post-remedial action period to verify design performance.
- Corrective action to be initiated within 18 months after monitoring indicates or projects an exceedance of the applicable concentration limits.

Subpart B (40 CFR Part 192.11-192.12) lists the standards applicable for remediating contaminated groundwater. It incorporates:

- Cleanup of the listed groundwater constituents to specified levels.
- Extension of the remedial period to allow for natural flushing if:
  - The groundwater is not, and is not projected to be, a public drinking water source, and
  - Institutional controls will effectively protect health and satisfy other beneficial uses, and
  - Concentration limits (40 CFR Part 264.94) will be met in less than 100 years.

2.2 WATER QUALITY PROTECTION

The EPA reviewed available water quality data at inactive tailings sites and determined that there was little evidence of recent movement of contaminants into groundwater. They also determined that any degradation of groundwater quality should be evaluated in the context of potential beneficial uses of the groundwater as determined by background water quality and the available quantity of groundwater.

Rather than establish specific numerical limitations for contaminant discharges or groundwater quality, the EPA established in the 1983 standards that the most appropriate course of action would be to require site-specific analyses of potential future contaminant discharge and a case-by-case evaluation of the significance of such a discharge. The implementation guidelines for the EPA standards called for adequate hydrological and geochemical surveys at each site as a basis for determining whether specific water protection measures should be applied.

The site assessments further called for judgements of the need for restoration or prevention, or both, to be guided by the EPA's hazardous waste management system and relevant state and Federal water-quality criteria. Decisions on specific actions to protect or restore water quality were to be guided by such factors as the technical feasibility of improving the aquifer, the cost of applicable restorative or protective programs, the present and future value of the aquifer as a water source, the availability of alternate water supplies, and the degree to which human exposure is likely to occur.

On September 3, 1985, the U.S. Tenth Circuit Court of Appeals remanded the groundwater standards, 40 CFR 192.2(a)(2)-(3). The Court remanded the EPA groundwater standards primarily because, contrary to the direction of Congress, they were site-specific and not general. Moreover, the EPA groundwater standards were not consistent with other environmental regulations. The EPA accordingly revised and rewrote the groundwater standards applicable to the UMTRA Project (52 FR36000-36008), and on September 24, 1987, the EPA issued the so called "Proposed EPA Groundwater Protection Standards."

The proposed standards provide for:

- Protection of human health, safety, and the environment.
- Consideration of radiological and nonradiological hazards.
- Consistency with the requirements of the Resource Conservation and Recovery Act (RCRA), as amended. The EPA followed congressional desires for standards to be as close to the RCRA as possible.
- General standards applicable to all UMTRA Project sites (i.e., not site-specific as was the case for remanded standards).

APPENDIX B

COMPONENT ELIMINATION CRITERIA

Subpart C (40 CFR Part 192.20-192.22) addressed supplemental standards applicable to Subparts A and B. The supplemental standards provide for alternative actions which come as close to the standards "as reasonable under the circumstances." The NRC must concur in the application of supplemental standards. Supplemental standards may be applied if protection of human health and the environment is assured (40 CFR Part 192.22(d)) and:

- The proposed action would cause more environmental harm than it would prevent (40 CFR Part 192.21(b)), or
- Restoration is technically impracticable from an engineering perspective (40 CFR Part 192.21(f)), or
- The groundwater is Class III (40 CFR Part 192.21(g)).

All remedial actions performed under the UMTRCA must be performed in accordance with the EPA standards and with the concurrence of the NRC and the states and tribes. The NRC has not and does not intend to issue regulations applicable to the remedial actions at the inactive uranium processing sites, but will issue a general license for all sites and will concur in site-specific surveillance and maintenance plans for the disposal sites. The NRC concurrence in the site-specific surveillance and maintenance plan will render a site licensed.

000210

Component Elimination Criteria for
"Checklist" Cover (Continued)

Cover Component	Purpose & Function	Rationale for Elimination (based on site-specific conditions)
3. Rooting medium (2-3 feet of soil) (topsoils only)	o Provide rooting medium for vegetation. o Store water for plant growth. o Protect the underlying biointrusion layer from surface exposure.	o Vegetation would not be used for any of the reasons stated in No. 1 above.
4. Frost protection (random fill) (top & sideslopes)	o Protect the underlying layers from the effects of frost heave and frost penetration o Preserve the physical properties of the underlying layers.	o Regional frost penetration depth is insignificant: protection, if required, can be afforded by the erosion barrier or rooting medium (if included). o Piles at which construction is complete. o Piles for which the design is too far advanced to change.
5. Choked rock filter (layer of pea gravel overlying layer of coarse aggregate) (top & sideslopes)	o Prevent piping of soil into erosion/biointrusion barrier. o Drain infiltration as rapidly as possible to retard root growth.	o If biointrusion layer were not to be used for any of the reasons stated in No. 6 below. o Potential for slope instability, particularly on sideslopes.

Component Elimination Criteria for
Checklist Cover

Cover Component	Purpose & Function	Rationale for Elimination (based on site-specific conditions)
1. Erosion-barrier vegetation (topslopes only)	o Transpire moisture that enters soil. o Reduce infiltration. o Stabilize soil and reduce erosion. o Minimize impact of rainsplash.	o Unavailability[a] of suitable topsoil to support vegetation; topsoil is highly erodible because of physical structure or properties. o Short growing season (BEL/BOW). o Arid environment (MON/HAT). o If large rock would be required to control gullies, and such rock is not available. o Unavailability of "high" quality rock for the biointrusion layer. o Rock quality would have to meet the same requirements as that for frequently saturated conditions--scoring 65% or better. o Piles at which it is possible to show that a significantly thick rock layer can be placed to inhibit the establishment vegetation. o Piles at which construction is complete. o Piles for which design is too far advanced to change.
2. Erosion-barrier-small diameter rock layer above topsoil on pea gravel/soil mulch (topslopes only)	o Provide additional protection against soil erosion used in conjunction with vegetation. o Reduce evaporation rates within the underlying soil layer in drier environments--preclude drying of the radon barrier.	o Vegetation would not be used for any of the reasons reasons stated in No. 1 above. o Wet, humid environment (semitropical). o Unavailability of rock. o Inhibits vegetal growth.

000212

APPENDIX C

PROPOSED EPA GROUNDWATER PROTECTION STANDARDS

Component Elimination Criteria for
Checklist Cover (Concluded)

Cover Component	Purpose & Function	Rationale for Elimination (based on site-specific conditions)
6. Erosion/biointrusion 2-3 feet of cobbles with a low coefficient of uniformity to prevent biointrusion (top and sideslopes)	o Drain infiltration as rapidly as possible to retard root growth. Impede burrowing animals. o Act as a capillary break at the bottom of the layer to prevent upward movement of water. o Control topslope erosion if vegetation and topsoil eroded away.	o Biointrusion layer will not be protected from surface exposure by an overlying layer (i.e. topsoil, random fill rock). o Unavailability of "high" quality rock (frequently saturated conditions). o Piles for which the design is too far advanced to change.
7. High permeability drain (6"-12" layer of pea gravel overlying clean sand)	o Drain water laterally off the pile to limit infiltration. o Protect the underlying Claymax® liner system from displacement and rock penetration.	o Do not have underlying Claymax® liner system for any of the reasons stated in No. 8 below. o Potential for slope instability, particularly on sideslopes.
8. Infiltration barrier-Claymax® liner system (topslopes only)	o Intercept moisture. o Control infiltration. o Inhibit infiltration while mature vegetation community is establishing.	o Saturated hydraulic conductivity of radon barrier, amended or not, is low enough to lead to groundwater compliance. o Potential for slope instability. o Piles at which construction is complete. o Piles for which the design is too far advanced to change.
9. Radon barrier (clay/silt) (top & sideslopes)	o Inhibit radon emanation. o Limit infiltration.	o Rationale for reducing thickness--Claymax® liner system aids in radon gas diffusion.

[a]Availability encompasses volume, quality and size (for rock only).

000414

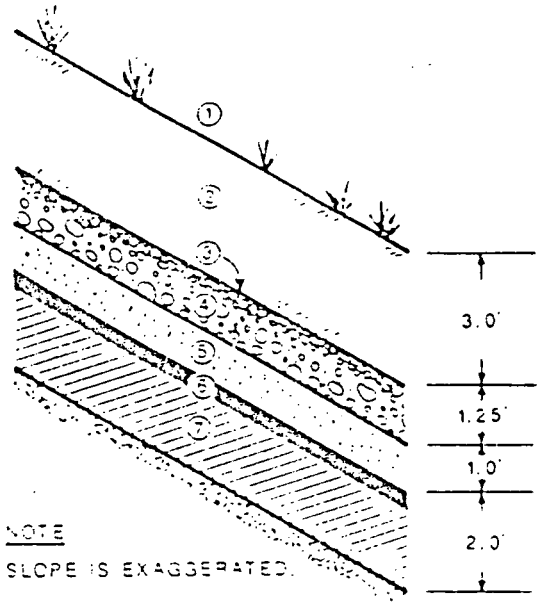

1. VEGETATION: SELF-SUSTAINING COMMUNITY
2. SOIL: NATURAL & AMENDED GROWTH MEDIUM
3. FILTER
4. BIOINTRUSION
5. DRAIN: CLEAN SAND
6. INFILTRATION BARRIER: CLAYMAX
7. RADON BARRIER: LOW-PERMEABILITY CLAY

TOP COVER

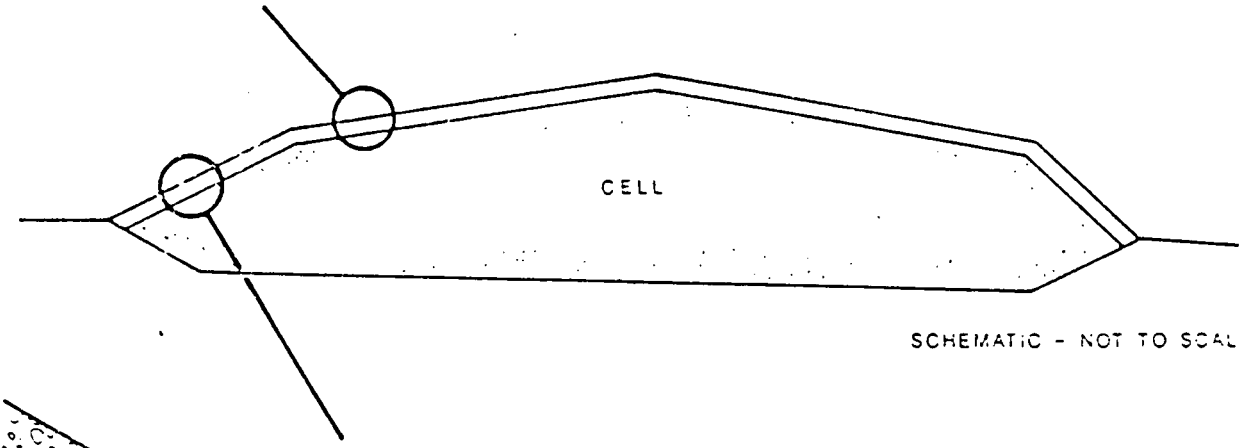

SCHEMATIC - NOT TO SCALE

SIDE SLOPES COVER

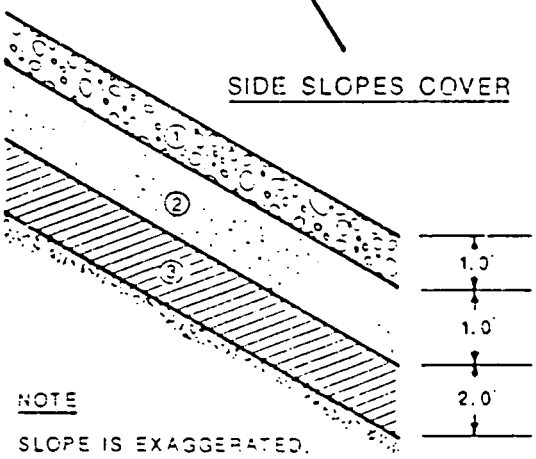

1. EROSION BARRIER: DURABLE ROCK
2. DRAIN: CLEAN SAND
3. INFILTRATION BARRIER & RADON BARRIER LOW-PERMEABILITY CLAY

FIGURE 15.1
GRAND JUNCTION PROPOSED COVER DESIGN

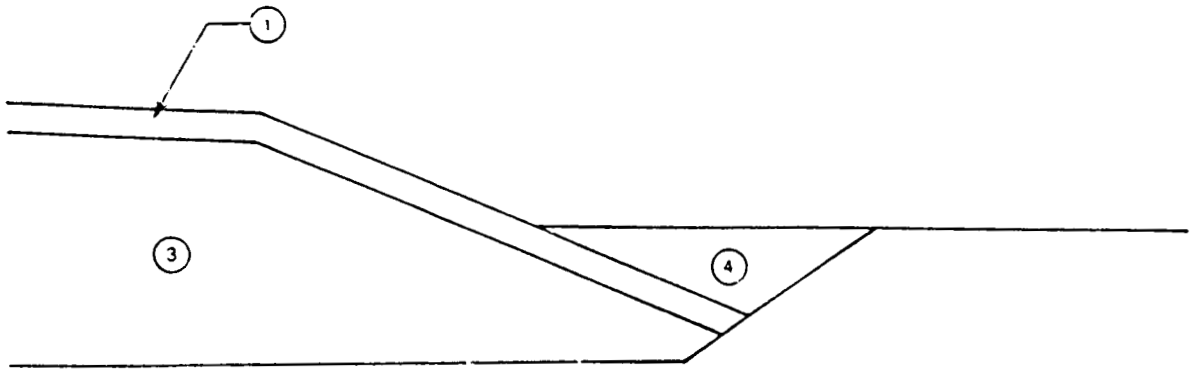

PROPOSED PERIMETER DETAIL

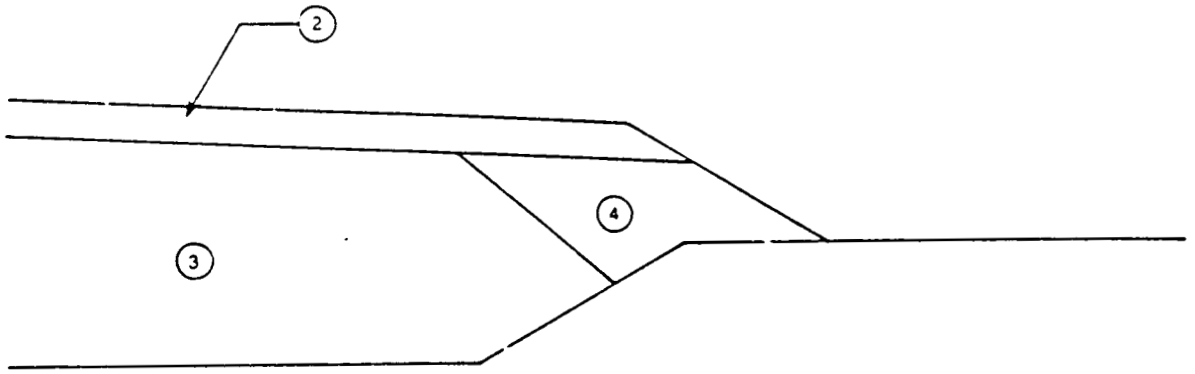

ALTERNATE PERIMETER DETAIL

1. COVER: RADON BARRIER, DRAIN, FROST PROTECTION, EROSION BARRIER
2. COVER: INCORPORATING CLAYMAX® AS INFILTRATION BARRIER
3. TAILINGS & CONTAMINATED MATERIAL
4. CLEAN FILL

FIGURE 15.2
GREEN RIVER DISPOSAL CELL: ALTERNATE PERIMETER DESIGNS

The proposed cover incorporates a radon/infiltration barrier ammended with bentonite to produce a low hydraulic conductivity (the bentonite was added as a direct result of the need to comply with the proposed EPA groundwater standards). Over the radon/infiltration barrier is a permeable drain and an erosion barrier of durable rock. The most significant feature of the cell is the five feet of select fill at the base to retard contaminant movement.

15.3 GUNNISON

The proposed remedial action for the tailings from the Gunnison pile is to relocate them to the Landfill site. The proposed cell and cover details are shown on Figure 15.3; the cell consists of the "constrained cell" approach. In addition, the cover incorporates most of the elements of the Checklist Cover, including CLAYMAX and vegetation as the interactive infiltration control mechanism. This conservative approach is adopted in order to achieve MCLs at the new disposal site.

The perimeter detail includes dikes of clean, compacted soil. The inner slopes of these dikes will be arranged to preclude backseepage of water, coming off the topslope, into the tailings. This will be achieved either by a pronounced slope, as much as two to one, by introducing anisotropy into the dike by selective construction practices (inclined layer placement with smooth rolling of successive lifts), or by planning a fine-grained capillary break between the tailings and dike materials. The side dikes of clean material are selected primarily to reduce contaminant seepage from the cell. Because of the wet, cold climate at the site, partially saturated flow conditions are unlikely to prevail in a radon barrier of a sideslope with conventional details (as shown in Figure 15.1). As the saturated flow through a conventional sideslope is likely to result in too great a contaminant flow rate, it is necessary to place clean material and eliminate contaminated seepage from beneath the sideslopes.

The topslope design is essentially the same as that discussed previously for the Grand Junction pile, except that the soil layer thickness is increased to provide the required site-specific frost protection depth.

15.4 DURANGO

At the time of the first appearance of the EPA groundwater protection standards, the relocation of tailings from the processing site to the new disposal site at Bodo Canyon was well advanced. The only reasonable design modification possible to enhance compliance with the groundwater protection standards was to change the cover details. Alteration of the sideslope inclination was considered, but the cost and construction implications did not yield a commensurate increased potential for compliance with the standards.

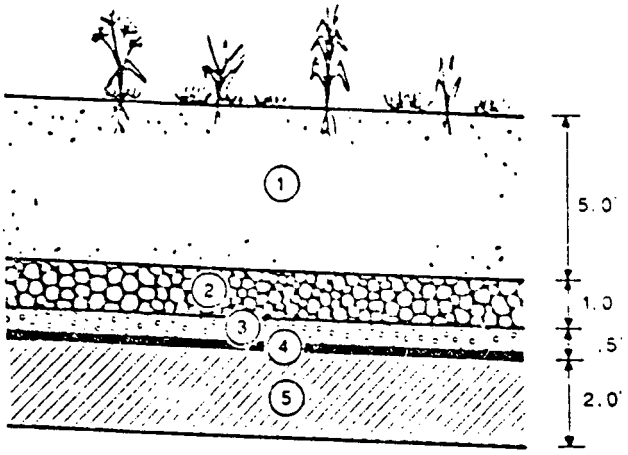

VEGETATION

1. FROST PROTECTION & GROWTH LAYER: RANDOM SOIL
2. BIOINTRUSION: COBBLES
3. DRAIN: SAND & GRAVEL
4. INFILTRATION BARRIER: CLAYWAY
5. RADON BARRIER: CLAY & SILT

TOP COVER DETAIL

6. PERIMETER DIKE: RANDOM FILL FROM EXCAVATION
7. DISPOSAL CELL: TAILINGS & CONTAMINATED MATERIAL
8. EXCAVATION
9. EROSION APRON

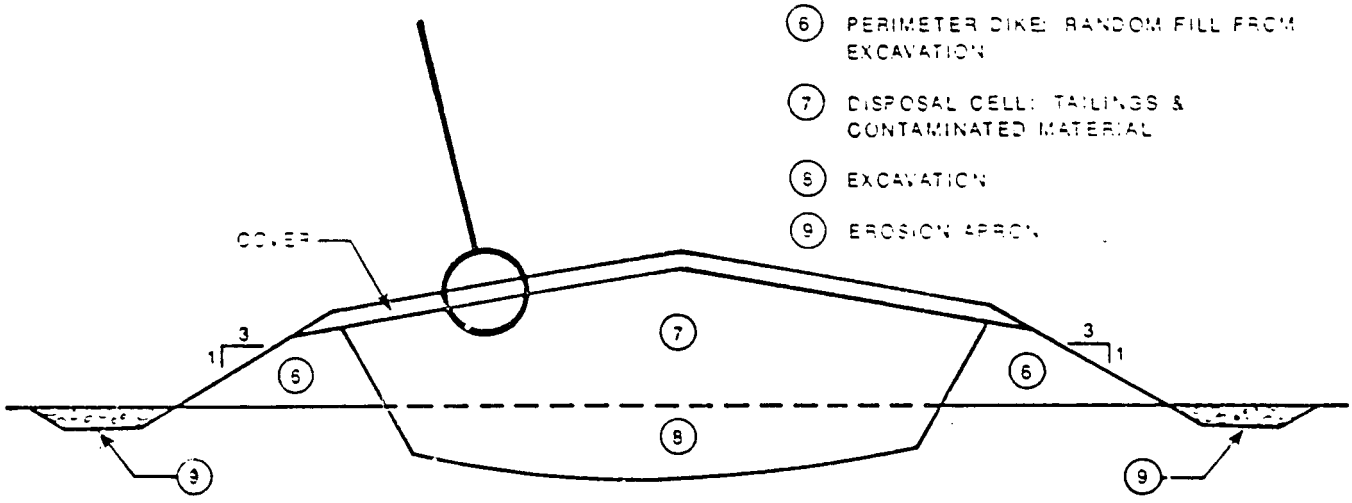

CROSS SECTION THROUGH DISPOSAL CELL

FIGURE 15.3
DISPOSAL CELL DETAILS
LANDFILL
GUNNISON, COLORADO

000118

After considerable evaluation, the details for the cover as shown on Figure 15.4, were recommended. As at Grand Junction and Gunnison, the topslope incorporates vegetation and CLAYMAX as the operative infiltration barriers. The radon barrier also acts as an infiltration barrier. (See Section 12.4 where the synergistic interaction of the various cover components and the concept of multiple infiltration barriers is explained). In order to protect the radon/infiltration barrier from the deleterious effects of freezing, a frost protection layer is placed above the radon/infiltration barrier. A drain is placed between the frost protection layer and the radon/infiltration barrier to prevent build up of an hydraulic head on the infiltration barrier that would then increase seepage through the infiltration barrier.

The interface between the topslope and the sideslope cover is shown in the Figure 15.4. The detail adopted creates a coarse rock "ledge" around the perimeter of the topslope. This ledge functions as an erosion control base level.

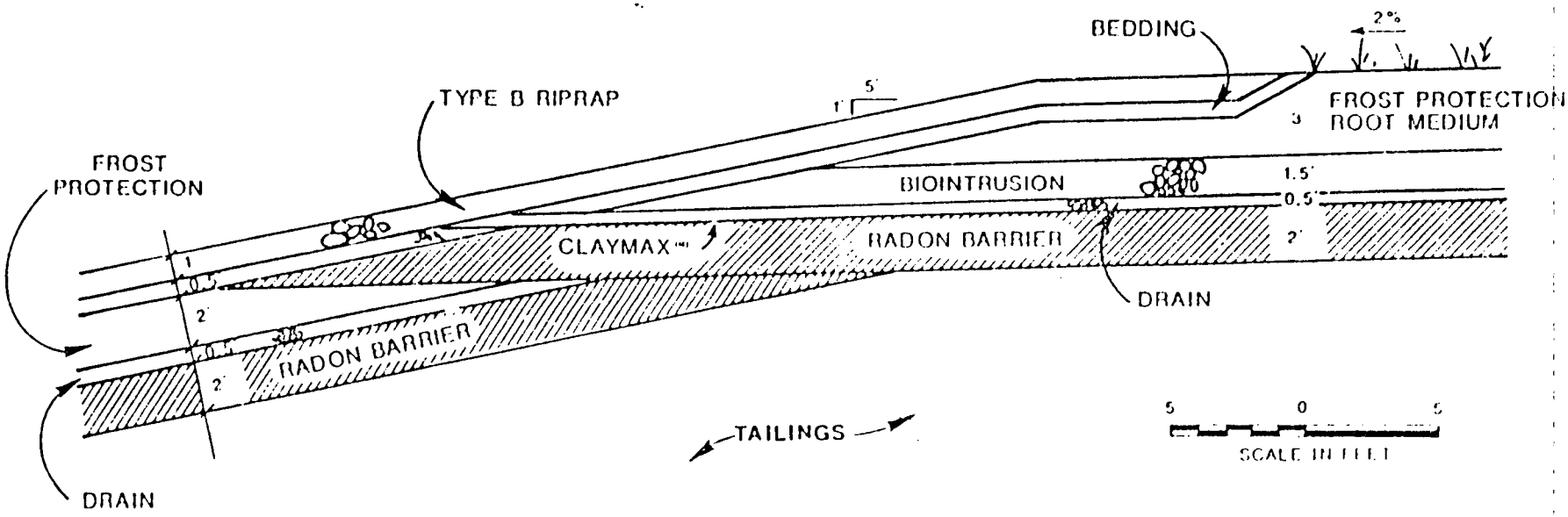

FIGURE 15.4
FINAL COVER DESIGN
DURANGO, COLORADO

16.0 THE FUTURE

16.1 THE FINAL EPA GROUNDWATER PROTECTION STANDARDS

The DOE anticipates that the EPA will publish the final version of the groundwater protection standards as applicable to Title I sites (the UMTRA Project) in the spring of 1989. The DOE has commented extensively on the proposed standards as they impact both Subpart A (disposal cell design) and Subpart B (aquifer restoration) compliance. As described in this report, the DOE considers that it is feasible, although considerably more costly than hitherto estimated, to achieve compliance with the Subpart A requirements of the proposed standards.

In order to anticipate the final standards, the DOE is adopting as the first compliance strategy MCLs, and supplemental standards or ACLs only where unavoidable.

To preclude the need for liners, the DOE is undertaking placement of the tailings at moisture contents as low as is consistent with the need to compact tailings to a state which assures disposal facility stability.

The DOE plans or is constructing covers for which the operative water flux is approximately $1x10^{-7}$ to $1x10^{-9}$ cm/s or less. The DOE believes that the cover and cell designs it proposes will reduce the infiltration to the lowest limits practically attainable for the 1,000 year project design life.

For the reasons given here, the DOE believes that it has moved rapidly and consistently to comply not only with the strict requirements but also with the spirit of the proposed and any possible final EPA groundwater protection standards.

16.2 CONTINUING SPECIAL STUDIES

The DOE believes that it is prudent and practical to use only proven technology in implementing remedial action schemes on UMTRA Project sites. The UMTRA Project is not a research undertaking: it was not undertaken to develop new technologies. Nevertheless, in order to comply with new and changing EPA standards, the demands of concurring parties, and the questions of reviewers, the DOE has expended considerable sums on technology development and will continue to do so in the future. This report describes the current and planned studies undertaken to advance knowledge, seek more efficient technological approaches, reduce costs, and meet the stringent requirements of the EPA standards.

The DOE anticipates definite benefits from these studies, and intends to implement positive results as they are accepted by reviewers and in particular as they lead to more cost-effective compliance with the final EPA groundwater protection standards.

000121

16.3 THE CONCURRENCE OF REVIEWERS

This report has described numerous new technical approaches, design philosophies, and remedial action proposals. Before construction work begins at a site, the NRC must concur in the DOE's proposed remedial action plan. Few of the ideas and approaches described in this report have been formally presented to the NRC in the context of a specific site remedial action plan--the only way in which the NRC can or will formally consider a technical plan or design. Thus, there is a distinct possibility that the NRC will not accept a particular DOE proposal as described in this report. The DOE has attempted to avoid such an event by continuing technological discussions with the NRC, aimed at defining and identifying general technical approaches, such as those contained in the TAD and the NRC Standard Review Plan (NRC, 1986).

16.4 THE REVISED UMTRA PROJECT DOCUMENTS

Remedial action planning and implementation on the UMTRA Project is done in terms of a number of project documents that describe technical approaches, procedures, and methods. The following project documents will soon be updated in order to bring them into line with the new demands of the EPA groundwater protection standards. In that the intention is to reflect the final version of the standards into these documents, it is likely that most will be published only after the promulgation of the final standards.

- The Technical Approach Document. This document describes the technical approaches agreed to by all UMTRA Project participants (DOE, NRC, and states and tribes).

- The UMTRA Project Site Management Manual. This document describes the procedures and processes followed to take a site remedial action plan from inception through NRC concurrence and construction.

- The UMTRA Project Surveillance and Maintenance Plan. This document describes the general approaches adopted to monitor a site after construction of the remedial works, and to implement any necessary maintenance activities.

000122

17.0 SUBPART B COMPLIANCE

President Reagan signed the UMTRA Amendments Act of 1988 into law on November 5, 1988. The law extends the Congressional deadline for cleanup of sites from 1990 to 1994. In addition, the Act authorizes the Secretary of the DOE to perform groundwater restoration activities in terms of the UMTRA Project "without limitation."

In pursuit of Subpart B compliance, the DOE has defined possible groundwater compliance strategies at each UMTRA Project site and estimated the cost of the likely remedial work. Technologies being considered by the DOE include:

- o Extraction of contaminated groundwater with wells or trenches.
- o Treatment of contaminated groundwater prior to discharge or reinjection into an aquifer by various methods including chemical treatment, biological treatment and physical separation using evaporation ponds.
- o In situ treatment of contaminated groundwater using lixiviant injection or permeable treatment beds or wells.
- o Discharge of the contaminated groundwater following extraction, or extraction and treatment, by one of the following methods: discharge to surface water; infiltration; injection in shallow wells; injection in deep wells.
- o Employment of natural flushing as a passive restoration method.

Additional technical evaluations, discussion, and planning are required before site-specific remedial plans can or will be finalized.

The DOE has compiled preliminary cost estimates of Subpart B compliance. Depending on the details of the final EPA groundwater protection standards, as promulgated, the estimated cost could range from $300 million to one billion dollars, or about as much as the current UMTRA Project budget.

In accordance with its stated policy, the DOE will begin planning and implementing Subpart B compliance (groundwater restoration activities) once the final groundwater protection standards are promulgated by the EPA.

REFERENCES

Adams, M.R., and N.R. Wing, 1987. "Protective Barrier and Warning Marker System Development Plan," RMO-RE-PL-35P, Rockwell Hanford Operation, Richland, Washington.

Bierley D.A., 1988. "Alternate Concentration Limits for the UMTRA Project," presentation to the DOE Model Conference, Oakridge, Tennessee.

Cline, et al. (J. F. Cline, K. A. Gano, and L.E. Rogers), 1980. "Loose Rock as Biobarriers in Shallow-Land Burial," in Health Physics, 39:497-504.

DOA (U.S. Department of Agriculture), 1980. CREAMS - A Field Scale Model for Chemicals, Runoff, and Erosion From Agricultural Management Systems, Conservation Research Report Number 26.

DOC (U.S. Department of Commerce), 1984. Hydrologic Evaluation of Landfill Performance (HELP) Model, Volume 2 Documentation for Version 1.

DOE (U.S. Department of Energy), 1988a. Technical Approach Document, UMTRA-DOE/AL-050425.0001, DOE UMTRA Project Office, Albuquerque Operations Office, Albuquerque, New Mexico.

DOE (U.S. Department of Energy), 1988b. "Geomembrane Special Study," UMTRA-DOE/AL-400644.000, DOE UMTRA Project Office, Albuquerque Operations Office, Albuquerque, New Mexico.

DOE (U.S. Department of Energy), 1988c. "Alternate Cover Materials Special Study," UMTRA-DOE/AL-400646.000, DOE UMTRA Project Office, Albuquerque Operations Office, Albuquerque, New Mexico.

DOE (U.S. Department of Energy), 1988d. "Alternate Cover Designs Special Study," UMTRA-DOE/AL-400647.000, DOE UMTRA Project Office, Albuquerque Operations Office, Albuquerque, New Mexico.

DOE (U.S. Department of Energy), 1988e. "Freeze/Thaw Special Study," UMTRA-DOE/AL-400648.000, DOE UMTRA Project Office, Albuquerque Operations Office, Albuquerque, New Mexico.

DOE (U.S. Department of Energy), 1988f. "Vegetative Cover Special Study," UMTRA-DOE/AL-400642.000, DOE UMTRA Project Office, Albuquerque Operations Office, Albuquerque, New Mexico.

DOE (U.S. Department of Energy), 1988g. "Radon/Infiltration Barrier Moisture Content Special Study," UMTRA-DOE/AL-400649.000, DOE UMTRA Project Office, Albuquerque Operations Office, Albuquerque, New Mexico.

DOE (U.S. Department of Energy), 1988h. "Hydrogeochemistry Special Study," UMTRA-DOE/AL-400643.000, DOE UMTRA Project Office, Albuquerque Operations Office, Albuquerque, New Mexico.

Federal Register

Thursday
September 24, 1987

Part III

Environmental Protection Agency

40 CFR Part 192

Standards for Remedial Actions at Inactive Uranium Processing Sites; Proposed Rule

ENVIRONMENTAL PROTECTION AGENCY

40 CFR Part 192

[FR 3227-5]

Standards for Remedial Actions at Inactive Uranium Processing Sites

AGENCY: U.S. Environmental Protection Agency.

ACTION: Proposed rule.

SUMMARY: The Environmental Protection Agency is proposing health and environmental regulations to correct and prevent contamination of ground water beneath and in the vicinity of inactive uranium processing sites by uranium tailings. EPA issued regulations (40 CFR Part 192 Subparts A, B, and C) for cleanup and disposal of tailings from these sites on January 5, 1983. These new regulations would replace existing provisions at 40 CFR 192.20(a) (2) and (3) that were remanded by the Tenth Circuit Court of Appeals on September 3, 1985. They are proposed pursuant to section 275 of the Atomic Energy Act (42 U.S.C. 2022), as amended by Section 206 of the Uranium Mill Tailings Radiation Control Act of 1978 (Pub. L. 95-604) (UMTRCA).

The regulations would apply to tailings at the 24 locations that qualify for remedial action under Title I of Pub. L. 95-604. They provide that tailings must be stabilized and controlled in a manner that permanently eliminates or minimizes contamination of ground water beneath stabilized tailings, so as to protect human health and the environment. They also provide for cleanup of contamination that existed before the tailings are stabilized.

DATES: *Comments.* Comments on this Notice of Proposed Rulemaking will be accepted until October 26, 1987.

Hearing. A Public Hearing will be held on October 29, 1987 at 9:00 a.m. (see below).

ADDRESSES: *Comments.* Comments should be submitted (in duplicate if possible) to: Central Docket Section (LE-130), U.S. Environmental Protection Agency, Attention: Docket Number R-87-01, Washington, DC 20460. The Docket is available for public inspection between 8:00 a.m. and 3:00 p.m., Monday through Friday, at EPA's Central Docket Section (LE-130), West Tower Lobby, 401 M Street SW., Washington, DC. A reasonable fee may be charged for copying.

Hearing. A Public Hearing will be held at the Strater Hotel, 699 Main Ave., Durango, Colorado 81301. Requests to participate should be made in writing to Floyd L. Galpin, Acting Director, Criteria and Standards Division (ANR-460), U.S. Environmental Protection Agency, Washington, DC 20460. All requests should include an outline of the topics to be addressed and names of the participants. Oral presentations should be limited to a maximum of 30 minutes. Presentations may also be made without prior notice, but may be subjected to time contraints at the discretion of the hearing officer. Written comments made during or in conjunction with the oral presentations will be accepted after the hearing for a period of time to be announced at the hearing.

FOR FURTHER INFORMATION CONTACT: Kurt L. Feldmann, Guides and Criteria Branch (ANR-460), Office of Radiation Programs, U.S. Environmental Protection Agency, Washington, DC 20460; telephone number (202) 475-9620.

SUPPLEMENTARY INFORMATION:

I. Supporting Document

A report ("Draft Background Information Document—Proposed Standard for the Control of Contamination in Ground Water in the Vicinity of Inactive Uranium Mill Sites," EPA 520/1-87-014) has been prepared to support these proposed regulations. Single copies may be obtained from the Program Management Office (ANR-458), Office of Radiation Programs, Environmental Protection Agency, Washington, DC 20460; (202) 475-8386.

The report contains a brief history of the Title I sites, a summary of the types and quantities of ground-water contamination present at sites for which such data are available, where and over what period of time the contamination is projected to disperse in the absence of control, and a description of alternate ground-water contamination control and cleanup technologies and their associated costs. An analysis of information supporting the decisions reflected in this proposed standard completes the report.

II. Scope of this Proposed Rulemaking

On November 8, 1978, Congress enacted the Uranium Mill Tailings Radiation Control Act of 1978, Pub. L. 95-604 (henceforth called "UMTRCA"). In UMTRCA, Congress enunciated its finding that uranium mill tailings ". . . may pose a potential and significant radiation health hazard to the public, and . . . that every reasonable effort should be made to provide for stabilization, disposal, and control in a safe and environmentally sound manner of such tailings in order to prevent minimize radon diffusion into the environment and to prevent or minimize other environmental hazards from such tailings." The Act directs the Administrator of the Environmental Protection Agency (EPA) to set ". . . standards of general application for the protection of the public health, safety, and the environment . . ." to govern this process of stabilization, disposal, and control.

UMTRCA directs the Department of Energy (DOE) to conduct such remedial actions at the inactive uranium processing sites as will insure compliance with the standards established by EPA. This remedial action is to be selected and performed with the concurrence of the Nuclear Regulatory Commission (NRC).

Standards are required for two types of remedial action: disposal and cleanup. Here disposal is used to mean the operation which places tailings in a permanent condition that will minimize risk to people and harm to the environment. Cleanup is the operation which eliminates or reduces to acceptable levels the potential health and environmental consequences of tailings or their constituents that have been dispersed from tailings piles by natural forces or people prior to disposal.

On January 5, 1983, EPA promulgated final standards for the disposal and cleanup of the inactive mill tailings sites under UMTRCA (48 FR 590). These standards were challenged in the Tenth Circuit Court of Appeals by several parties (Case Nos. 83-1014, 83-1041, 83-1206, and 83-1300). On September 3, 1985, the court dismissed all challenges except one: it set aside the ground-water provisions of the regulations at 40 CFR 192.20(a)(2)-(3) and remanded them to EPA ". . . to treat these toxic chemicals that pose a ground-water risk as it did in the active mill site regulations." With this notice, EPA is proposing new regulations to replace those set aside.

III. Summary of Background Information

Beginning in the 1940's, the U.S. Government purchased large quantities of uranium for defense purposes. As a result, large piles of tailings were created by the uranium milling industry. Tailings piles pose a hazard to public health and the environment because they contain radioactive and toxic constituents which emanate radon to the atmosphere and may leach into ground water. Tailings are a sand-like material, and have also been removed from tailings piles in the past for use in construction and for soil conditioning. These uses are inappropriate, because the radioactive and toxic constituents of tailings may elevate indoor radon levels

expose people to gamma radiation, and leach into ground and surface waters.

Most of these mills are now inactive and many are abandoned. Congress designated 22 specific inactive sites in Title I of UMTRCA, and the DOE subsequently added 2 more. Most other uranium tailings sites are regulated by the NRC or States under Title II of UMTRCA (DOE owns one inactive site at Monticello, Utah, that is not included under UMTRCA). The Title I sites are all located in the West, predominantly in arid areas, except for a single site at Canonsburg, Pennsylvania. Tailings piles at the inactive sites range in area from 5 to 150 acres and in height from only a few feet to as much as 230 feet. The amount at each site ranges from residual contamination to 2.7 million tons of tailings. The 24 designated Title I sites combined contain about 25 million tons of tailings covering a total of about 1000 acres.

The disposal of tailings at these sites is currently being carried out by DOE under the provisions of Title I of UMTRCA. In addition, tailings that were dispersed from the piles by natural forces, or that have been removed for use in or around buildings, or on land, are being retrieved and replaced on the tailings piles prior to their disposal.

UMTRCA requires that DOE complete all these remedial actions within 7 years of the effective date of EPA's standards, that is by March 5, 1990. Remedial actions have been completed at the Canonsburg, Pennsylvania, pile, the only site in an area of high precipitation, and at Shiprock, New Mexico. Remedial actions are currently well advanced at two other sites: Salt Lake City, Utah and Lakeview, Oregon. Work is expected to begin at approximately six others during 1987–1988. In view of the rate of progress with remedial work, the DOE is requesting a legislative extension of the completion date until September 1993.

The most important hazardous constituent of uranium mill tailings is radium, which is radioactive. Other potentially hazardous substances in tailings piles include arsenic, molybdenum, selenium, uranium, and usually in lesser amounts, a variety of other toxic substances. The concentrations of these materials vary from pile to pile, ranging from 2 to more than 100 times applicable standards. Although a variety of organics are known to have been used at these sites, none has thus far been detected in tailings.

Exposure to radioactive and toxic substances may cause cancer and other diseases, as well as genetic damage and teratogenic effects. Tailings pose a risk to health because: (1) Radium in tailings decays into radon, a gaseous radioactive element which is easily transported in air, and whose radioactive decay products may lodge in the lungs; (2) individuals may be directly exposed to gamma radiation from the radioactivity in tailings, and (3) radioactive and toxic substances from tailings may leach into water and then be ingested with food or water. It is the last of these hazards that is primarily addressed here. (Although radon from radium in ground water is unlikely to pose a hazard in these locations, these proposed standards would also address that potential hazard.) The other hazards are covered by existing provisions of 40 CFR Part 192.

We have based our analysis on detailed reports for 12 of the 24 inactive uranium mill tailings sites that have been developed to date for the Department of Energy by its contractors. Preliminary data for the balance of the sites have also been examined. These data show that the volumes of contaminated water in the existing aquifers at the 24 sites range from 23 million gallons to 4 billion gallons. In a few instances, mill effluent was apparently the sole source of this ground water. Each of the 12 sites examined in detail have ground-water contamination beneath and/or beyond the site. In some cases, the ground water upgradient of the pile already exceeded EPA drinking water standards for one or more contaminants, thus making it unsuitable for use as drinking water and, in some extreme cases, for any other purpose before it was contaminated by effluent from the mill. Some contaminants from the tailings piles are moving offsite quickly and others are moving slowly. The time for natural flushing of the contaminated portions of these aquifers is estimated to vary from several years to many hundreds of years.

Contaminants that have been identified in the ground water downgradient from a majority of the sites include uranium, sulfate, iron, manganese, nitrate, chloride, molybdenum, selenium, and total dissolved solids. Radium, cobalt, arsenic, fluoride, chromium, cadmium, ammonium, boron, vanadium, lead, thorium, zinc, silver, copper, and magnesium have also been found in the ground water at one or more sites.

UMTRCA requires that the standards established under Title I provide protection that is consistent, to the maximum extent practicable, with the requirements of the Resource Conservation and Recovery Act (RCRA). In this regard, regulations established by EPA for hazardous waste disposal sites under RCRA provide for the specification of ground-water protection limits for the specific hazardous constituents relevant to each regulated unit in permits. These regulations contain general numerical limits for some constituents in ground water; limits for other constituents are set at their background level in ground water at the regulated unit. Together with a provision for the point of compliance, these limits become the facility's ground-water protection standard, unless alternate concentration limits (ACLs) are approved. ACLs may be requested based upon data which would support a determination that, if the ACL is satisfied, the constituent would not present a current or potential threat to human health or the environment.

IV. The Proposed Standards

The proposed standards consist of two parts, a first part governing the control of any future ground-water contamination that may occur from tailings piles after disposal, and a second part that applies to the cleanup of contamination that occurred before disposal of the tailings piles.

A. The Ground-Water Standard for Disposal

The proposed standard (Subpart A) for control of potential contaminant releases to ground water after disposal is divided into two parts that separately address actions to be carried out during period of time designated as the remedial and post-disposal periods. The remedial and post-disposal periods are defined in a manner analogous to the closure and post-closure periods, respectively, in RCRA regulations. However, there are some differences regarding their duration and the timing of any corrective actions that may become necessary due to failure of disposal to perform as designed. (Because there are no mineral processing activities currently at these inactive sites, standards are not needed for an operational period.) The remedial period, for the purpose of this regulation, is defined as that period of time beginning on the effective date of the original Part 192 (Title I) standard (March 7, 1983) and ending with completion of remedial actions by DOE. The post-disposal period begins with completion of remedial actions and ends after an appropriate period for the monitoring of ground water to confirm the adequacy of the disposal, as determined by NRC for each site. The proposed ground-water standard for the disposal to be carried out during the remedial period adopts relevant

paragraphs from Subpart F of Part 264 of this Chapter (§§ 264.92–264.95). The proposed standard for the post-disposal period adopts § 264.111 (a) and (b) of this Chapter, and also incorporates provisions for monitoring and a corrective action program. These provisions are essentially the same as those governing the licensed (Title II) uranium mill tailings sites (40 CFR 192, Subparts D and E; see also the Federal Register notices for these standards published on April 29, 1983 and on October 7, 1983). However, additional constituents are here proposed to be regulated (in addition to the general RCRA list of hazardous constituents and table of applicable limits) that are applicable to these sites only.

These proposed regulations would require installation of monitoring systems upgradient of the point of compliance (i.e., in the uppermost aquifer upgradient of the edge of the tailings disposal site) to determine background levels of any listed constituents that occur naturally at the site. The disposal would then be designed to control, to the extent reasonably achievable for 1000 years and, in any case, for at least 200 years, all listed constituents identified in the tailings at the site to levels for each constituent derived in accordance with § 264.94. Accordingly, the elements of the ground-water protection standard to be specified for each disposal site would include a list of relevant constituents, the concentration limits for each such constituent, and the compliance point.

To obtain an ACL for any constituent, the DOE would have to provide data to support a finding that the presence of the constituent at the proposed ACL in ground water at the site would not pose a substantial present or potential hazard to human health or the environment. ACLs could be granted provided that, after considering practicable corrective actions, a determination can be made that it satisfies the lower of the values given by the standard for setting ACLs in § 264.94(b), and the corrective action that is as low as reasonably achievable (ALARA).

The standards of Title II sites require use of a liner under new tailings piles or lateral extensions of existing piles. These standards for remedial action at the inactive Title I sites do not contain a similar provision. We assume that the inactive piles will not need to be enlarged. Several, however, will be relocated. However, unlike tailings at the Title II sites, which generally may contain large amounts of process water, the inactive tailings contain little or no free water. Such tailings, if properly located and stablized with an adequate cover, are not likely to require a liner in order to protect ground water.

However, a liner may be required to satisfy the proposed ground-water standards in situations where tailings now, or may in the future, contain water above the level of specific retention. For example, tailings to which water is added to facilitate their removal to a new site (i.e., through slurrying) or piles in areas of high precipitation or within the zone of water table fluctuation could discharge contaminants to ground water. Under § 192.20(a)(2) of these proposed standards, it would be necessary for the DOE, with the concurrence of the NRC, to propose and carry out a disposal design in such circumstances which uses a liner or equivalent to assure that ground water would not be contaminated and, at the same time, satisfy the existing requirements of these standards for control of radon emissions. In such circumstances, this may be accomplished by installing a liner beneath the tailings whose permeability is greater than that of the cover material. If the tailings form an acid solution when mixed with water, a neutalizing material mixed with the tailings or added to the liner are additional methods that may need to be considered to fix listed constituents in the immediate vicinity of a pile. In addition, a capillary break may be necessary to prevent migration of water into a pile from below. Currently, however, DOE plans do not include slurrying any tailings to move them to new locations. Further, for all but one site that has already been closed (Canonsburg), the tailings are located in and areas where annual precipitation is low.

Disposal designs which prevent migration of listed constituents in the ground water for a short period of time would not provide appropriate protection. Such approaches simply defer adverse ground-water effects. Therefore, measures which only modify the gradient in an aquifer or create barriers (e.g., slurry walls) would not of themselves provide an adequate disposal. Where feasible, it may be appropriate to protect ground water by preventing generation of leachate containing listed constituents. A method that appears promising is fixing the constituents *in situ* (in place) so they cannot be leached out. *In situ* treatment of constituents may be considered analogous to removal when it provides long-term protection of human health or the environment. While the Agency recognizes that *in situ* treatment is an emerging technology, applied in only limited circumstances to date, it should be considered where it can provide an effective ground-water protection strategy.

At the end of the remedial period (i.e. when disposal and any cleanup required under Subpart B has been completed) ground waters would be required to be in compliance with the standards established pursuant to these regulations. During the post-disposal period, the regulations would further require that methods used for disposal provide a reasonable expectation that the provisions of § 264.111 (a) and (b) will be met. Paragraph 264.111(a) requires that a site be closed in a manner that minimizes further maintenance. Paragraph 264.111(b) requires control, minimization, or elimination of post-disposal escape of listed constituents to ground or surface water to the extent necessary to prevent threats to human health and the environment. In the context of these regulations, this would mean control pursuant to the standards established under §§ 264.92–264.95. Depending on the properties of the sites, candidate disposal systems, and the effects of natural processes over time, measures required to satisfy the proposed standards would vary from site to site. Actual site data, computational models and prevalent expert judgment would be used in deciding that proposed measures will satisfy the standards. Under the provisions of section 108(a) of UMTRCA, the adequacy of these judgments would be determined by the NRC.

During the post-disposal period, monitoring of the disposal would be required for a period sufficient to verify the adequacy of the disposal to achieve its design objectives for containment of listed constituents. This period is intended to be comparable to the time period required under § 264.117 for waste sites regulated under RCRA (i.e. a few decades). It is not intended that monitoring be carried out for the 200- to 1000-year period over which the disposal is designed to be effective.

If listed constituents from a disposal site appeared during the post-disposal period in excess of the ground-water standards for disposal, the proposed regulations would require a corrective action program designed to bring the disposal and the ground water back into compliance. Such a corrective action would have to last as long as is necessary to achieve conformance with the ground-water protection standard and include a modification of the monitoring program sufficient to

demonstrate that the corrective measures will be permanently successful.

Additional Regulated Constituents

For the purpose of this regulation only, the Agency proposes to regulate, in addition to the hazardous constituents referenced by § 264.93, molybdenum, nitrate, combined radium-226 and radium-228, and combined uranium-234 and uranium-238. Molybdenum, radium, and uranium were addressed by the Title II standards because these radioactive and/or toxic constituents are found in high concentrations at many mill tailings sites. Nitrate is proposed for addition because it has been identified in concentrations far in excess of drinking water standards in ground water at a number of the inactive sites.

The proposed concentration limit for molybdenum in ground water from uranium tailings is 0.10 milligram per liter. This is the value of the provisional adjusted acceptable daily intake (AADI) for drinking water developed by EPA under the Safe Drinking Water Act (50 FR 46958). The Agency has proposed neither a maximum concentration limit goal (MCLG) nor a maximum concentration limit (MCL) for molybdenum because it occurs only infrequently in water. According to the most recent report of the National Academy of Sciences (*Drinking Water and Health*, 1980, Vol. III), molybdenum from drinking water, except for highly contaminated sources (e.g., molybdenum mining wastewater) is not likely to constitute a significant portion of the total human intake of this element. However, since uranium tailings can be a highly concentrated source of molybdenum, it is appropriate to include a standard for molybdenum in this proposed rule. In addition to the hazard to humans, our analysis of toxic substances in tailings in the Final Environmental Impact Statement for Remedial Action Standards for Inactive Uranium Processing Sites (EPA 520/4-82-013-1) found that, for ruminants, molybdenum in concentrations greater than 0.5 ppm in drinking water would lead to chronic toxicity.

The proposed limit for combined uranium-234 and uranium-238 due to contamination from uranium tailings is 30 pCi per liter. At this concentration, the estimated lifetime radiation risk of fatal cancer would be the same as that for the existing ground water standard for combined radium-226 and radium-228 (5 pCi per liter) (51 FR 34836), based on dose assessments for ingestion as determined by the International Commission on Radiological Protection. This proposed limit would apply to remedial actions for uranium tailings under these regulations only; the Agency has not made a proposal for a general standard for isotopes of uranium in water. However, this limit is within the range of values currently under consideration for drinking water.

The proposed concentration limit for nitrate (as nitrogen) is 10 mg per liter. This is the value of the interim drinking water standard for nitrate.

B. The Cleanup Standard

With the exception of the point of compliance provision, the proposed standard (Subpart B) for cleanup of contaminated ground water contains identical basic provisions (§§ 264.92-.94) as the standard for disposal in Subpart A. In addition, it provides for the establishment of supplemental standards under certain conditions and for use of institutional control to permit passive restoration through natural flushing when no community drinking water source is involved.

The standards do not specify a single point of compliance for the cleanup of ground water that has been contaminated by residual radioactive materials from uranium milling before final disposal. Instead, the "point of compliance" is any point where contamination is found in the ground water. The standard requires DOE to establish a monitoring program to determine the extent of contamination (§ 192.12(c)(1)) in ground water around a processing site (§ 192.11(b)). The possible presence of any of the inorganic or organic hazardous constituents identified in tailings or used in the processing operation should be assessed. The remedial action plan referenced under § 192.20(b)(4) would document the extent of contamination, the rate and direction of movement of contaminants, and consider future movement of the plume.

The proposed cleanup standards would normally require restoration of all contaminated ground water to the levels provided for under § 264.94. These levels are either background concentrations, the levels specified in Tables 1 and A, or ACLs. In cases where the ground water is not classified as Class III, any ACL should be determined under the assumption that the ground water may be used for drinking purposes.

In certain circumstances, however, supplemental standards set at levels that assure, at a minimum, protection of human health and the environment, and come as close to meeting the otherwise applicable standards as is reasonably achievable by remedial actions could be granted if:

- The ground water at the site is Class III (See definitions § 192.11(e)) in the absence of contamination from tailings, or
- Complete restoration would cause more environmental harm than it would prevent; or
- Complete restoration is technically impracticable from an engineering perspective.

The use of supplemental standards for Class III ground water would apply the ground water classification system established in EPA's 1984 Ground Water Protection Strategy. Procedures for classifying ground water are presented in "Guidelines for Ground-Water Classification under the EPA Ground-Water Protection Strategy" released in final draft in December 1986 and due to be finalized during late 1987. Under these draft guidelines, Class I ground waters encompass highly vulnerable resources of particularly high value, e.g., an irreplaceable source of drinking water or ecologically vital ground water. Class II ground water include all non-Class I ground water that is currently used or is potentially adequate for drinking water. Class III encompasses ground waters that are not a current or potential source of drinking water due to widespread, ambient contamination caused by natural or human-induced conditions, or cannot provide enough water to meet the needs of an average household. Human-induced conditions would not include the contribution from the uranium mill tailings. At sites with Class III ground water, the proposed supplemental standards would require only such management of contamination due to tailings as would be required to prevent additional adverse impacts on human health and the environment from that contamination. For example, if the additional contamination from the tailings would cause an adverse effect on Class II ground water that has a significant interconnection with the Class III ground water over which the tailings reside, then the additional contamination from the tailings would have to be abated.

Supplemental standards may also be appropriate in certain other cases similar to those addressed in section 121(d)(4) of the Superfund Amendments and Reauthorization Act of 1986 (SARA). SARA recognizes that cleanup of contamination could sometimes cause environmental harm disproportionate to the health effects it would alleviate. For example, if fragile ecosystems would be impaired by any reasonable restoration process (or by carrying a restoration process to extreme lengths to remove small amounts of residual

contamination), then it might be prudent to protect them in lieu of completely restoring ground-water quality. Decisions regarding tradeoffs of environmental damage can only be based on characteristics peculiar to the location. We do not know whether there are such situations in the UMTRCA program, but we believe that DOE should be permitted to propose supplemental standards in such situations, after thorough investigation and consideration of all reasonable restoration alternatives, for concurrence by the NRC.

Based on currently available information, we are not aware that at least substantial restoration of ground-water quality is technically impracticable from an engineering perspective at any of the designated sites. However, our information may be incomplete. We believe DOE should not be required to institute active measures that would completely restore ground water at these sites if such restoration is technically impracticable from an engineering perspective, and if, at a minimum, protection of human health and the environment is assured. Consistent with the provisions of SARA for remediation of waste sites generally, the proposed standards would therefore permit DOE to propose supplemental standards in such situations at levels achievable by site-specific alternate remedial actions that are technically practicable. The concurrence role of the NRC would also apply to such proposals. A finding of technical impracticability from an engineering perspective would require careful and extensive documentation, including an analysis of the degree to which remediation is practicable. It should be noted that the word "practicable" is not identical in meaning to the word "practical." As used here, the former means "able to be put into practice" and the latter means "cost-effective." In addition to documentation of technical matters related to cleanup technology, DOE would also have to include a detailed assessment of such site-specific matters as transmissivity of the geologic formation, contaminant properties (e.g., withdrawal and treatability potential), and the exent of contamination.

Finally, for aquifers where passive restoration can be projected to occur naturally within a period less than 100 years, and where the ground water is not now and is not now projected to be used for a community water supply within this period, we propose to allow extension of the remedial period to that time, provided satisfactory institutional control of public use of ground water and an adequate monitoring program is established and maintained throughout this extended remedial period.

The proposal to allow extension of the remedial period to permit reliance on passive restoration through natural flushing is based on the judgment that no active cleanup is warranted to restore ground-water quality where ground-water concentration limits will be met within a period no greater than 100 years through natural processes and no substantial use of the water exists or is projected, if institutional control is established that will effectively protect public health in the interim. This mechanism may also be a useful supplement for situations where active cleansing to completely achieve the standards is impracticable, environmentally damaging, or excessively costly, if the partially cleansed ground water can achieve the levels required by the standards through natural flushing within an acceptable extended remedial period. Alternate standards would not be required where final cleanup is to be accomplished through natural flushing, since those established under § 264.94 would be met at the end of the remedial period.

The proposed regulations would establish a time limit on such extension of the remedial period to limit reliance on extended use of institutional controls to control public access to contaminated ground water. Following the precedent established by our final rule for high-level radioactive wastes (40 CFR 191.14(a)), it is proposed that use of institutional controls be permitted for this purpose only when they will be needed for periods of less than 100 years. Otherwise, active restoration rather than passive restoration through reliance on natural flushing would be required.

Institutional controls must be effective over the entire period of time that they would be in use. Examples of acceptable measures include legal use restrictions enforceable by permanent government entities, or measures with a high degree of permanence, such as Federal or State ownership of the land containing the contaminated water. In some instances, a combination of institutional controls may have to be used at the same time to provide adequate protection, such as providing an alternate source of drinking water and placing a deed restriction on the property to prevent use of contaminated ground water. Institutional controls that would not be adequate are measures such as health advisories, signs, posts, admonitions, or any other measure that requires the voluntary cooperation of private parties. In all cases in which DOE proposes to use institutional controls the measures must have a high probability of protecting the human health and the environment and must receive the concurrence of the NRC.

Restoration methods for ground water include removal methods, wherein the contaminated water is removed from the aquifer, treated, and either disposed of, used, or reinjected into the aquifer, and *in situ* methods, such as the addition of chemical or biological agents to fix the contamination in place. Appropriate restoration methods will depend on characteristics of specific sites and may involve use of a combination of methods. Water can be removed from an aquifer by pumping it out through wells or by collecting the water from intercept trenches. Slurry walls can sometimes be put in place to contain contamination and prevent further migration of contaminants, so that the volume of contaminated water that must be treated is reduced. The background information document contains a more extensive discussion of candidate restoration methods.

We have reviewed preliminary information on all 24 sites and detailed information on 12 of the 24 to make a preliminary assessment of the extent of potential applicability of the proposed supplemental standards and use of passive remediation under institutional control. Based on these analyses, none of the pre-existing ground water beneath uranium mill tailings piles falls into Class I. Approximately two-thirds of the sites appear to be over Class II and the balance over Class III ground waters. The rate at which natural flushing is occurring at three or four of the 24 sites would permit consideration of passive remediation under institutional control as the sole remedial method. We are not able to predict the applicability of provisions regarding technical impracticability or excess environmental harm, since this requires detailed analysis of specific sites, but we anticipate that wide application would be unlikely. It is emphasized that the above assessments are not based on final results for the vast majority of these sites, and is, therefore, subject to change.

RCRA regulations provide that, for disposal units regulated by EPA under RCRA, the constituents to be included in the ground water protection standard (§ 264.93) and acceptable concentrations of each (§ 264.94) are decided by the Regional Administrator of EPA. The regulations also provide for ACLs to be issued by the Regional Administrator. The criteria to be considered when

issuing ACLs are listed in § 264.94(b). EPA's regulations under Title II of UMTRCA provide that the NRC, which regulates active sites, replace the EPA Regional Administrator for the above functions when any contamination permitted by an ACL will remain on the licensed site. Because section 108(a) of UMTRCA requires the Commission's concurrence with DOE's selection and performance of remedial actions to conform to EPA's standards, we propose that the Nuclear Regulatory Commission administer all such functions for Title I, including concurrence on supplemental standards.

C. Request for Comments

The Agency solicits comment on this entire proposed rule. In addition, we are particularly interested in receiving comments and recommendations on the following issues:

1. Should a liner requirement always be imposed on tailings piles that are moved to a new location? Should a liner be required only if the DOE or the NRC conclude that it is needed to satisfy the ground-water standards for disposal?

2. For designated processing sites from which tailings have been removed, is a specific requirement that DOE clean up the ground water before releasing the land to State or private owners needed to assure that such cleanup will occur?

3. Should institutional controls be relied upon, for a limited time, to prevent access of the public to ground water in order to permit use of natural flushing of contaminants, as proposed? If so, what types of institutional controls should be allowed? Should these be specified in the rule? Is the proposed time period appropriate?

4. Should the option to make use of natural flushing for cleansing of contaminants be limited to cases where some restoration of the ground water has already been carried out? Should the use of an alternate concentration limit (ACL) be permitted, as proposed, in the case of clean up to be achieved (in whole or part) by natural flushing?

5. Are the proposed bases for supplemental standards for cleanup reasonable and adequate for the protection of public health? Should other bases be provided and, if so, what are they? Should the provisions for natural flushing and supplemental standards for cleanup apply only to existing contamination or should they also apply, as is proposed, to "new" contamination due to failure of the disposal design to perform as intended?

6. Under these proposed standards, alternate concentration limits would be concurred in by the NRC. Should EPA establish generic criteria and/or guidance governing the application of the provisions of § 264.94(b) of this Part to these judgments for these standards?

7. Should EPA publish, as part of this standard, a restricted list of just those radioactive and toxic constituents that are present at these sites, or continue to rely on the entire list (supplemented as proposed) of constituents encompassed by RCRA regulations? Should the proposed list of additional listed constituents be changed?

8. EPA could consider publishing a restricted list of just those radioactive and toxic constituents that are principal contaminants at these sites and specifying a limit for each of these, under the assumption that any minor contaminants would be taken care of in the cleanup of these principal contaminants. With such a restricted set of constituents and corresponding complete set of limits, EPA could then consider dropping the provisions for ACLs and relying solely on the remaining provisions for exceptional cases. Should EPA adopt this approach?

9. Should EPA specify a minimum or the entire period for post-disposal ground-water monitoring in Subpart A, or leave it to the DOE and NRC to determine this period on a site-specific basis, as proposed? If EPA should specify a period, what length would be appropriate to demonstrate conformance to the disposal design standard, and on what basis should this value be chosen?

10. For tailings regulated by NRC under Title II of the Act, section 84(a)(3) requires the NRC to develop regulations to conform to general requirements applicable to the possession, transfer, and disposal of hazardous materials regulated by the Administrator. Should the standards proposed here incorporate such requirements for tailings regulated under Title I?

11. Is it appropriate to base the uranium contaminant limit on radioactivity alone or should the chemical toxicity of uranium result in a more restrictive value?

12. Should the Agency consider revising the Title II regulations to incorporate those portions of the Title I regulations that are different from the Title II regulations, e.g., the additional contaminant limits in Table A?

13. Are the estimated costs of implementing these proposed standards accurate and based on reasonable assumptions?

14. What criteria should be used to judge "technically impracticable from an engineering perspective?" Can and should these criteria be specified in the rule or should they be left to the judgment of the Department of Energy and the Nuclear Regulatory Commission?

15. The criteria proposed here to specify ground water as Class III and therefore qualified for supplemental standards, are based on draft proposals still under consideration by the Agency. Are these criteria appropriate for this application, or would others be more appropriate for use at these sites?

V. Implementation

UMTRCA requires the Secretary of Energy to select and perform the remedial actions needed to implement these standards, with the full participation of any State that shares the cost. The NRC must concur with these actions and, when appropriate, the Secretary of Energy must also consult with affected Indian tribes and the Secretary of the Interior.

The cost of remedial actions will be borne by the Federal Government and the States as prescribed by UMTRCA. The clean-up of ground water is a large-scale undertaking for which there is relatively little experience. Ground-water conditions at the inactive processing sites vary greatly, and, as noted above, engineering experience with some of the required remedial actions is limited. Although preliminary engineering assessments have been performed, specific engineering requirements and costs to meet the ground-water standards at each site have yet to be determined. We believe that costs averaging about 12 million (1986) dollars for each tailings site at which extensive cleanup is required are most likely.

The benefits from the cleanup of this ground water are difficult to quantify. We expect that, in a few instances, ground water that was unusable due to contamination from tailings piles and needed for use will be restored. In the areas where the tailings were processed, ground water is relatively scarce due to the arid condition of the land. However, most of the contamination at these sites occurs in shallow alluvial aquifers, which have limited current use in these locations because of their generally poor quality and the availability of better water from deeper aquifers.

Implementation of the disposal standard for protection of ground water will require a judgment that the method chosen provides a reasonable expectation that the provisions of the standard will be met, to the extent reasonably achievable, for up to 10^4 years and, in any case, for at least 200 years. This judgment will necessarily be based on site-specific analyses of the properties of the sites, candidate

disposal systems and the potential effects of natural processes over time. Therefore, the measures required to satisfy the standard will vary from site to site. We expect that actual site data, computational models, and expert judgment will be the major tools in deciding that a proposed disposal system will satisfy the standard.

The purpose of the proposed ground-water cleanup standard is to provide the maximum reasonable protection of public health and the environment. Costs incurred by remedial actions should be directed toward this purpose. We intend the standards to be implemented using verification procedures whose cost and technical requirements are reasonable. Procedures that provide a reasonable assurance of compliance with the standards will be adequate. Measurements to assess existing contamination and to determine compliance with the cleanup standards should be performed with reasonable survey and sampling procedures designed to minimize the cost of verification.

The explanatory discussions regarding implementation of these regulations in § 192.20 (a)(2) and (a)(3) are revised to remove those provisions that the Court remanded and to reflect these new proposals.

These standards are not expected to affect the disposal work DOE has already performed on tailings. We expect, in general, that a pile that has been properly designed to comply with the disposal standards now in effect for long-term stabilization and control of radon emanation from a pile will also comply with these disposal standards for the control of ground-water contamination. DOE will have to determine, with the concurrence of the NRC, if any additional work may be needed to comply with the ground-water cleanup requirements. However, any such cleanup work should not adversely affect the control systems for tailings piles that have already been or are currently being installed.

VI. Regulatory Impact Analysis/Regulatory Flexibility

Under Executive Order 12291, EPA must judge whether a regulation is "Major" and therefore subject to the requirement of a Regulatory Impact Analysis. That order requires such an analysis if the regulations would result in (1) an annual effect on the economy of $100 million or more; (2) a major increase in costs or prices for consumers, individual industries, Federal, State, or local government agencies or geographic regions; or (3) significant adverse effects on competition, employment, investment, productivity, innovation, or on the ability of United States-based enterprises to compete with foreign-based enterprises in domestic or export markets.

This proposed regulation is not Major, because we expect the costs of the remedial action program for ground water in any calendar year to be less than $100 million. States bear only 10% of these costs and there are no anticipated major effects on costs or prices for others, and we anticipate no significant adverse effects on domestic or foreign competition, employment, investment, productivity, or innovation. Estimated costs under these proposed regulations are discussed in the Background Information Document.

This proposed regulation was submitted to the Office of Management and Budget (OMB) for review as required by Executive Order 12291.

This rule does not contain any information collection requirements subject to OMB review under the Paperwork Reduction Act of 1980 U.S.C. 3501, et seq.

This proposed regulation will not have a significant effect on a substantial number of small entities as specified under section 605 of the Regulatory Flexibility Act, because there are no small entities subject to this regulation.

Dated: September 10, 1987.

Lee M. Thomas,

Administrator.

List of Subjects in 40 CFR Part 192

Environmental protection, Radiation protection, Uranium.

For reasons set forth in the preamble, 40 CFR Chapter I, Part 192, Subparts A, B and C are proposed to be amended as follows:

PART 192—HEALTH AND ENVIRONMENTAL PROTECTION STANDARDS FOR URANIUM MILL TAILINGS

1. The authority citation for Part 192 continues to read as follows:

Authority: Section 275 of the Atomic Energy Act of 1954, 42 U.S.C. 2022, as added by the Uranium Mill Tailings Radiation Control Act of 1978 as amended, Pub. L. 95-604.

Subpart A—Standards for the Control of Residual Radioactive Materials From Inactive Uranium Processing Sites

* * * * *

2. Section 192.01 is amended by revising paragraph (a) and adding paragraphs (g), (h), (i), and (j) to read as follows:

§ 192.01 Definitions.

(a) Unless otherwise indicated in this subpart, all terms have the same meaning as in Title I of the Act. Reference to Part 264 of the Code of Federal Regulations is to that Part as codified on January 1, 1983. (These references will be replaced by the complete text in the final rule.)

* * * * *

(g) *Remedial period* means the period of time beginning March 7, 1983 and ending with the completion of requirements specified under a remedial action plan.

(h) *Remedial Action Plan* means a written plan for a specific site that incorporates the results of site characterization studies, environmental assessments or impact statements, and engineering assessments into a plan for disposal and cleanup which satisfies the requirements of Subparts A and B.

(i) *Post-disposal period* means the period of time beginning immediately after the completion of the requirements of Subpart A and ending at completion of the monitoring requirements established under § 192.02(c).

(j) *Ground water* is subsurface water within a zone in which substantially all the voids are filled with water under pressure equal to or greater than that of the atmosphere.

3. Section 192.02 is amended by redesignating and revising the introductory text as paragraph (a), paragraph (a) is redesignated as paragraph (a)(1), paragraph (b) introductory text is redesignated as paragraph (a)(2), paragraph (b)(1) is redesignated as paragraph (a)(2)(i), paragraph (b)(2) is redesignated as paragraph (a)(2)(ii), and paragraphs (a)(3), (a)(4), (b) and (c) are added to read as follows:

§ 192.02 Standards.

(a) Control of residual radioactive materials and their listed constituents shall be designed [1] to:

* * * * *

(3) Conform to the ground-water protection provisions of §§ 264.92-264.95 of Part 264 of this chapter, except that, for the purposes of this subpart:

(i) To the list of constituents referenced in § 264.93 of this chapter are added molybdenum, radium, uranium and nitrate.

[1] Because the standard applies to design, monitoring after closure is not intended to demonstrate compliance. This footnote applies only to § 192.02 (a)(1) and (2).

(ii) To the concentration limits provided in Table 1 of § 264.94 of this chapter are added the constituent limits in Table A of this subpart.

TABLE A.

Constituent	Limit
Combined radium-226 and radium-228	5 pCi/liter
Combined uranium-234 and uranium-238	30 pCi/liter
Gross alpha-particle activity (excluding radon and uranium)	15 pCi/liter.
Nitrate (as N)	10 mg/liter
Molybdenum	0.1 mg/liter

(iii) The Secretary shall determine what listed constituents are present in the tailings at a disposal site.

(iv) A monitoring program shall be established upgradient of the disposal site adequate to determine background levels of listed constituents.

(v) The Secretary may propose and, with the Commission's concurrence, apply alternate concentration limits, provided that, after considering practicable corrective actions, the Commission determines that these are as low as reasonably achievable, and that, in any case, § 264.94(b) is satisfied, and

(vi) The functions and responsibilities designated in referenced paragraphs of Part 264 of this chapter as those of the "Regional Administrator" with respect to "facility permits" shall be carried out by the Commission.

(4) Comply with the performance standard in § 264.111 (a) and (b) of this chapter.

(b) The Secretary shall propose and, following concurrence by the Commission, implement a monitoring plan, to be carried out over a period of time which shall constitute the post-disposal period, which is adequate to demonstrate that initial performance of the disposal is in accordance with the design requirements of § 192.02(a).

(c) If the ground-water standards established under provisions of § 192.02(a) are found or projected to be exceeded, as a result of the monitoring program established for the post-disposal period under § 192.02(b), a corrective action program to restore the disposal to the design requirements of § 192.02(a) and, as necessary, to clean up ground water in conformance with Subpart B shall be put into operation as soon as is practicable, and in no event later than eighteen (18) months after a finding of exceedance.

Subpart B—Standards for Cleanup of Land and Buildings Contaminated With Residual Radioactive Materials From Inactive Uranium Processing Sites

* * * * *

4. Section 192.11 is amended by revising paragraph (b) and adding paragraph (e) to read as follows:

§ 192.11 Definitions.

* * * * *

(b) *Land* means (1) any surface or subsurface land that is not part of a disposal site and is not covered by an occupiable building, and (2) subsurface land that contains ground water contaminated by listed constituents from residual radioactive material from the processing site.

* * * * *

(e) *Class III ground water* [3] means ground water that is not a current or potential source of drinking water because (1) the concentration of total dissolved solids is in excess of 10,000 mg/l, (2) widespread, ambient contamination not due to activities involving residual radioactive materials from a designated processing site exists that cannot be cleaned up using treatment methods reasonably employed in public water-supply systems, or (3) the quantity of water available is less than 150 gallons per day.

5. In § 192.12, the introductory text is republished and paragraph (c) is added to read as follows:

§ 192.12 Standards.

Remedial actions shall be conducted so as to provide reasonable assurance that, *as a result of residual radioactive materials from any designated processing site:*

* * * * *

(c) The concentration of any listed constituent in ground water as a result of releases from residual radioactive material at any designated processing site shall not exceed the provisions of §§ 264.92–264.94 of this chapter as modified by § 192.02(a)(3) (i) and (ii), except that for the purposes of this subpart:

(1) The Secretary shall carry out a monitoring program adequate to define the extent of ground-water contamination by listed constituents from residual radioactive materials and to monitor compliance with this Subpart.

(2) The Secretary may propose and, with the Commission's concurrence, apply alternate concentration limits, provided that, after considering practicable corrective actions, the Commission determines that these are as low as reasonably achievable, and § 264.94(b) is satisfied.

(3) The functions and responsibilities designated in referenced paragraphs of Part 264 of this chapter as those of the "Regional Administrator" with respect to "facility permits" shall be carried out by the Commission.

(4) The remedial period established under Subpart A may be extended by an amount not to exceed 100 years if

(i) The concentration limits established under this Subpart are not projected to be exceeded at the end of this extended remedial period.

(ii) Institutional control, which will effectively protect public health and satisfy beneficial uses of ground water during the extended remedial period, is instituted, as part of the remedial action, at the processing site and wherever contamination by listed constituents from residual radioactive materials is found in ground water, or is projected to be found.

(iii) The ground water is not currently and is not now projected to become a source of supply for public drinking water subject to provisions of the Safe Drinking Water Act during the extended remedial period, and

(iv) The requirements of Subpart A are satisfied within the time frame established under section 112(a) of the Act, or as extended by Act of Congress.

Subpart C—Implementation

6. In § 192.20, paragraphs (a)(2) and (a)(3) and (b)(1) are revised and paragraph (b)(4) is added to read as follows:

§ 192.20 Guidance for implementation.

* * * * *

(a) * * *

(2) Protection of water should be considered on a case-specific basis, drawing on hydrological and geochemical surveys and all other relevant data. The hydrologic and geologic assessment to be conducted at each site shall include a monitoring program sufficient to establish background ground water quality through one or more upgradient wells. New disposal sites for tailings that still contain water at greater than the level of "specific retention" or tailings that are slurried to the new location shall use

[3] Class III ground waters are further defined in *Ground-Water Protection Strategy*, Office of Ground-Water Protection, USEPA, Washington, DC 20460, August 1984, and the Final Draft of *Guidelines for Ground Water Classification under the EPA Ground Water Protection Strategy*, Office of Ground Water Protection, USEPA, Washington, DC 20460, December 1986.

a liner or equivalent to prevent contamination of ground water.

(3) The remedial action plan, following approval by the Commission, will specify how applicable requirements of Subpart A are to be satisfied. The plan shall include the schedule and steps necessary to complete disposal operations at the site. It shall include an estimate of the inventory of wastes to be disposed of in the pile and their listed constituents and address (i) any need to eliminate free liquids, (ii) stabilization of the wastes to a bearing capacity sufficient to support the final cover, and (iii) the design and construction of a cover to manage the migration of liquids through the stabilized pile, function with minimum maintenance, promote drainage and minimize erosion or abrasion of the cover, and accommodate settling and subsidence so that the cover's integrity is maintained.

(b)(1) Compliance with § 192.12 (a) and (b) of Subpart B, to the extent practical, should be demonstrated through radiation surveys. Such surveys may, if appropriate, be restricted to locations likely to contain residual radioactive materials. These surveys should be designed to provide for compliance averaged over limited areas rather than point-by-point compliance with the standards. In most cases, measurement of gamma radiation exposure rates above and below the land surface can be used to show compliance with § 192.12(a). Protocols for making such measurements should be based on assuming realistic radium distributions near the surface rather than extremes rarely encountered.

* * * *

(4) The remedial action plan, following approval by the Commission, will specify how applicable requirements of Subpart B would be satisfied. The plan should include the schedule and steps necessary to complete the cleanup of ground water at the site. It should document the extent of contamination due to releases prior to final disposal, including the identification and location of listed constituents and the rate and direction of movement of contaminated ground water. In addition, the assessment should consider future plume movement, including an evaluation of such processes as attenuation and dilution. In cases where § 192.12(c)(4) is invoked, the plan should include a monitoring program to verify projections of plume movement and attenuation throughout the remedial period. Finally, the plan should specify details of the method to be used for cleanup of ground water.

7. In § 192.21, the introductory text and paragraph (b) are revised, paragraph (f) is redesignated as paragraph (h), and new paragraphs (f) and (g) are added to read as follows:

§ 192.21 Criteria for applying supplemental standards.

Unless otherwise indicated in this subpart, all terms shall have the same meaning as defined in Title I of the Act or in Subparts A and B. The implementing agencies may (and in the case of subsection (h) shall) apply standards under § 192.22 in lieu of the standards of Subparts A or B if they determine that any of the following circumstances exists:

* * * * *

(b) Remedial actions to satisfy the cleanup standards for land (§ 192.12 (a) and (c)), or the acquisition of minimum materials required for control to satisfy § 192.02 (a) (2) and (3), would notwithstanding reasonable measures to limit damage, directly produce environmental harm that is clearly excessive compared to the health benefits to persons living on or near the site, now or in the future. A clear excess of environmental harm is harm that is long-term, manifest, and grossly disproportionate to health benefits that may reasonably be anticipated.

* * * * *

(f) The restoration of ground water quality at any designated processing site under § 192.12(c) is technically impracticable from an engineering perspective.

(g) The ground water is Class III.

* * * * *

8. In § 192.22, paragraphs (a) and (b) are revised and paragraph (d) is added to read as follows:

§ 192.22 Supplemental standards.

* * * * *

(a) When one or more of the criteria of § 192.21 (a) through (g) applies, the implementing agencies shall select and perform remedial actions that come as close to meeting the otherwise applicable standard as is reasonable under the circumstances.

(b) When § 192.21(h) applies, remedial actions shall, in addition to satisfying the standards of Subparts A and B, reduce other residual radioactivity to levels that are as low as is reasonably achievable.

* * * * *

(d) When § 192.21 (f) or (g) applies, implementing agencies must apply any remedial actions for the restoration of contaminated ground water that is required to assure, at a minimum, protection of human health and the environment.

[FR Doc. 87-21723 Filed 9-23-87; 8:45 am]

BILLING CODE 6560-50-M

F-7418

NTIS does not permit return of items for credit or refund. A replacement will be provided if an error is made in filling your order, if the item was received in damaged condition, or if the item is defective.

Reproduced by NTIS
National Technical Information Service
U.S. Department of Commerce
Springfield, VA 22161

This report was printed specifically for your order from our collection of more than 2 million technical reports.

For economy and efficiency, NTIS does not maintain stock of its vast collection of technical reports. Rather, most documents are printed for each order. Your copy is the best possible reproduction available from our master archive. If you have any questions concerning this document or any order you placed with NTIS, please call our Customer Services Department at (703)487-4660.

Always think of NTIS when you want:
- Access to the technical, scientific, and engineering results generated by the ongoing multibillion dollar R&D program of the U.S. Government.
- R&D results from Japan, West Germany, Great Britain, and some 20 other countries, most of it reported in English.

NTIS also operates two centers that can provide you with valuable information:
- The Federal Computer Products Center - offers software and datafiles produced by Federal agencies.
- The Center for the Utilization of Federal Technology - gives you access to the best of Federal technologies and laboratory resources.

For more information about NTIS, send for our FREE *NTIS Products and Services Catalog* which describes how you can access this U.S. and foreign Government technology. Call (703)487-4650 or send this sheet to NTIS, U.S. Department of Commerce, Springfield, VA 22161. Ask for catalog, PR-827.

Name _____
Address _____
_____
_____
Telephone _____

- Your Source to U.S. and Foreign Government Research and Technology.

000135