7633 U-005-307.13

RISK ASSESSMENT METHODOLOGY ENVIRONMENTAL IMPACT STATMENT, NESHAPS FOR RADIONUCLIDES - (USED AS A REFERENCE IN OU3 RI/FS/PP APPENDIX H)

09/00/89

EPA/520/1-89-005
USEPA PUBLIC
150
REPORT

United States
Environmental Protection
Agency

Office of Radiation Programs
(ANR-459)

7633

EPA/520/1-89-005
September 1989

ERA PROJECT LIBRARY

EPA

Risk Assessments Methodology

PB90-195744

Environmental Impact Statement

NESHAPS for Radionuclides

Background Information Document — Volume 1

000001

ERA PROJECT
IRC
514.8 v.1

Printed on Recycled Paper

763 3

40 CFR Part 61
National Emission Standards
for Hazardous Air Pollutants

EPA 520/1-89-005

Risk Assessment Methodology

Environmental Impact Statement for NESHAPS Radionuclides

VOLUME I

BACKGROUND INFORMATION DOCUMENT

September 1989
U.S. Environmental Protection Agency
Office of Radiation Programs
Washington, D.C. 20460

000002

Preface

The Environmental Protection Agency is promulgating National Emission Standards for Hazardous Air Pollutants (NESHAPs) for Radionuclides. An Environmental Impact Statement (EIS) has been prepared in support of the rulemaking. The EIS consists of the following three volumes:

VOLUME I - Risk Assessment Methodology

This document contains chapters on hazard identification, movement of radionuclides through environmental pathways, radiation dosimetry, estimating the risk of health effects resulting from expose to low levels of ionizing radiation, and a summary of the uncertainties in calculations of dose and risks.

VOLUME II - Risk Assessments

This document contains a chapter on each radionuclide source category studied. The chapters include an introduction, category description, process description, control technology, health impact assessment, supplemental control technology, and cost. It has an appendix which contains the inputs to all the computer runs used to generate the risk assessment.

VOLUME III - Economic Assessment

This document has chapters on each radionuclide source category studied. Each chapter includes an introduction, industry profile, summary of emissions, risk levels, the benefits and costs of emission controls, and economic impact evaluations.

Copies of the EIS in whole or in part are available to all interested persons; an announcement of the availability appears in the Federal Register. For additional information, contact James Hardin at (202) 475-9610 or write to:

Director, Criteria and Standards Division
Office of Radiation Programs (ANR-460)
Environmental Protection Agency
401 M Street, SW
Washington, DC 20460

LIST OF PREPARERS

Various staff members from EPA's Office of Radiation Programs contributed in the development and preparation of the EIS.

Terrence McLaughlin	Chief, Environmental Standards Branch	
James Hardin	Health Physicist	Project Officer
Byron Bunger	Economist	Author/Reviewer
Fran Cohen	Attorney Advisor	Reviewer
Albert Colli	Environmental Scientist	Author/Reviewer
Larry Gray	Environmental Scientist	Author/Reviewer
W. Daniel Hendricks	Environmental Scientist	Reviewer
Paul Magno	Environmental Scientist	Author/Reviewer
Christopher B. Nelson	Environmental Scientist	Author
Dr. Neal S. Nelson	Radiobiologist	Author
Barry Parks	Health Physicist	Reviewer
Dr. Jerome Pushkin	Chief Bioeffects Analysis Branch	Author/Reviewer
Jack L. Russell	Engineer	Author/Reviewer
Dr. James T. Walker	Radiation Biophysicist	Author
Larry Weinstock	Attorney Advisor	Reviewer

An EPA contractor, S. Cohen and Associates, Inc., McLean, VA, provided significant technical support in the preparation of the EIS.

TABLE OF CONTENTS

VOLUME I: RISK ASSESSMENT METHODOLOGY

LIST OF TABLES vii

LIST OF FIGURES x

1. INTRODUCTION 1-1
   1.1 HISTORY OF STANDARDS DEVELOPMENT 1-1
   1.2 PURPOSE OF THE FINAL BACKGROUND INFORMATION DOCUMENT 1-3
   1.3 UPDATE METHODOLOGY 1-4

2. CURRENT PROGRAMS AND STRATEGIES 2-1
   2.1 INTRODUCTION 2-1
   2.2 THE INTERNATIONAL COMMISSION ON RADIOLOGICAL PROTECTION AND THE NATIONAL COUNCIL ON RADIATION PROTECTION AND MEASUREMENTS 2-2
   2.3 FEDERAL GUIDANCE 2-8
   2.4 THE ENVIRONMENTAL PROTECTION AGENCY 2-10
   2.5 NUCLEAR REGULATORY COMMISSION 2-12
   2.6 DEPARTMENT OF ENERGY 2-14
   2.7 OTHER FEDERAL AGENCIES 2-15
   2.8 STATE AGENCIES 2-16
   2.9 REFERENCES 2-17

3. HAZARD IDENTIFICATION 3-1
   3.1 EVIDENCE THAT RADIATION IS CARCINOGENIC 3-1
   3.2 EVIDENCE THAT RADIATION IS MUTAGENIC 3-6
   3.3 EVIDENCE THAT RADIATION IS TERATOGENIC 3-8
   3.4 UNCERTAINTIES 3-8
   3.5 SUMMARY OF EVIDENCE THAT RADIATION IS A CARCINOGEN, MUTAGEN, AND TERATOGEN 3-9
   3.6 REFERENCES 3-11

4. MOVEMENT OF RADIONUCLIDES THROUGH ENVIRONMENTAL PATHWAYS 4-1
   4.1 INTRODUCTION 4-1
   4.2 DISPERSION OF RADIONUCLIDES THROUGH THE AIR 4-1
   4.3 DEPOSITION OF ATMOSPHERIC RADIONUCLIDES 4-8
   4.4 TRANSPORT THROUGH THE FOOD CHAIN 4-11
   4.5 CALCULATING THE ENVIRONMENTAL CONCENTRATION OF RADIONUCLIDES: THE AIRDOS-EPA CODE 4-14
   4.6 REFERENCES 4-21

5. RADIATION DOSIMETRY
   5.1 INTRODUCTION 5-1
   5.2 BASIC CONCEPTS 5-1
   5.3 EPA DOSIMETRIC MODELS 5-8
   5.4 REFERENCES 5-36

6. ESTIMATING THE RISK OF HEALTH EFFECTS RESULTING FROM EXPOSURE TO LOW LEVELS OF IONIZING RADIATION 6-1
6.1 INTRODUCTION 6-1
6.2 CANCER RISK ESTIMATES FOR LOW-LET RADIATION 6-3
6.3 FATAL CANCER RISK RESULTING FROM HIGH-LET RADIATION 6-33
6.4 ESTIMATING THE RISK FROM LIFETIME POPULATION EXPOSURES FROM RADON-22 PROGENY 6-37
6.5 OTHER RADIATION-INDUCED HEALTH EFFECTS 6-54
6.6 SUMMARY OF EPA's RADIATION RISK FACTORS - A PERSPECTIVE 6-77
6.7 REFERENCES 6-81

7. AN ANALYSIS OF UNCERTAINTIES IN RISKS FOR SOME SELECTED SITES 7-1
7.1 INTRODUCTION 7-1
7.2 GENERAL APPROACH 7-2
7.3 UNCERTAINTY IN PARAMETERS 7-9
7.4 RESULTS 7-21
7.5 REFRENCES 7-30

APPENDIX A ASSESSMENT METHODOLOGY A-1
A.1 INTRODUCTION A-1
A.2 ENVIRONMENTAL PATHWAY MODELING A-1
A.3 REFERENCES A-14

APPENDIX B MECHANICS OF LIFE TABLE IMPLEMENTATION OF THE RISK ESTIMATES B-1
B.1 INTRODUCTION B-1
B.2 LIFE TABLE ANALYSIS TO ESTIMATE THE RISK OF EXCESS CANCER B-1
B.3 REFERENCES B-5

APPENDIX C OVERVIEW OF TECHNIQUES USED TO QUANTIFY UNCERTAINTY IN ENVIRONMENTAL RISK C-1
C.1 INTRODUCTION C-1
C.2 ASSESSMENTS C-2
C.3 LEVELS OF ANALYSIS C-4
C.4 UNCERTAINTY ANALYSIS DUE TO PARAMETER UNCERTAINTY C-5
C.5 TECHNIQUES FOR PROPAGATING UNCERTAINTIES . . C-7
C.6 PARAMETER DISTRIBUTIONS C-8
C.7 REFERENCES C-10

000006

LIST OF TABLES

Table 5-1 Quality factor for various types of radiation 5-5

Table 5-2. Weighting factors recommended by the ICRP for stochastic risks 5-6

Table 5-3. Comparison of customary and SI special units for radiation quantities 5-8

Table 5-4. Target organs and tissues used for calculating the ICRP effective dose equivalent and the EPA cancer risk 5-10

Table 6-1. Site specific incidence risk coefficients (10^6 per rad rad-y) 6-15

Table 6-2. Site-specific mortality to incidence risk ratios 6-16

Table 6-3. BEIR III $\overline{L-L}$ model for excess fatal cancers other than leukemia and bone cancer 6-17

Table 6-4. Mortality risk coefficients (10^{-3} per rad) for the constrained relative risk model 6-18

Table 6-5. BEIR III $\overline{L-L}$ model for excess incidence of (and mortality from) leukemia and bone cancer (absolute risk model) 6-19

Table 6-6. Site-specific mortality risk per unit dose (1.0E-6 per rad) for combined leukemia-bone and constrained relative risk model 6-21

Table 6-7. Site-specific incidence risk per unit dose (10E-6 per rad) for combined leukemia-bone and constrained relative risk model 6-22

Table 6-8. Comparison of general population risk estimates for fatal cancer due to low level, whole-body low-LET radiation 6-26

Table 6-9. Site-specific mortality risk per million person-rad from low level, low-LET radiation exposure of the general population 6-27

Table 6-10. Risk estimate for exposure to radon progeny 6-41

Table 6-11. BEIR IV committee estimate of lung cancer risk coefficient for age-constant, relative-risk model 6-43

Table 6-12. BEIR IV risk model - lifetime exposure and lifetime risk 6-45

Table 6-13. Estimated lung cancer risk coefficients from radon progeny exposure for three miner cohorts 6-45

Table 6-14. Lifetime risk from radon daughter exposure of lung cancer death (per 10^6 WLM) 6-49

Table 6-15. Lifetime risk from excess radon daughter exposure (adjusted for a background exposure of 0.25 WLM/yr) . . . 6-51

Table 6-16. Lifetime risk for varying age at first exposure and duration of exposure (Background = 0.25 WLM/yr) 6-52

Table 6-17. Lifetime risk for varying age at first exposure and duration of exposure (Background = 0.25 WLM/yr) 6-53

Table 6-18. UNSCEAR 1988 risks of genetic disease per 1 million live-births in a population exposed to a genetically significant dose of 1 rad per generation of low-dose rate, low-dose, low-LET irradiation 6-57

Table 6-19. BEIR III estimates of genetic effects of an average population exposure of 1 rem per 30-yr generation (chronic x-ray or gamma radiation exposure) 6-59

Table 6-20. Summary of genetic risk estimates per 10^6 liveborn of low-dose rate, low-LET radiation in a 30-yr generation 6-60

Table 6-21. Genetic risk estimates per 10^6 live-born for an average population exposure of 1 rad of high-LET radiation in a 30 year generation 6-61

Table 6-22. Radiation-induced reciprocal translocation in several species 6-62

Table 6-23. Estimated frequency of genetic disorders in a birth cohort due to exposure of the parents to 1 rad per generation 6-65

Table 6-24. Increase in background or level of genetic effects after 30 generations or more 6-67

Table 6-25. Causes of uncertainty in the genetic risk estimatel 6-68

Table 6-26. Possible effects of in utero radiation exposure 6-76

Table 6-27. Summary of EPA's radiation risk factors . . 6-78

Table 7-1. Environmental transport factors 7-14

Table 7-2. Distribution of ingestion pathway parameters 7-15

Table 7-3. Distribution of miscellaneous pathway factors 7-18

Table 7-4. Probability distributions for risk factors . 7-22

Table 7-5. Comparison of Monte-Carlo individual risk estimates to those in Volume II 7-26

Table 7-6. Contributions of various pathways to risk . 7-28

Table A-1. Presumed sources of food for urban and rural sites A-1

Table A-2. AIRDOS-EPA parameters used for generic site assessments A-5

Table A-3. Default values used for element dependent factors A-7

Table A-4. Cattle densities and vegetable crop distribution for use with AIRDOS-EPA A-9

Table A-5. Risk factors for selected radionuclides (see Table A-3 for default inhalation class and ingestion f_1 values) A-11

LIST OF FIGURES

Figure 4-1. Pathways of airborne radionuclides into the environment 4-2

Figure 4-2. Vertical concentration profiles for plume vs downwind distance from release 4-6

Figure 4-3. Circular grid system used by AIRDOS-EPA . . 4-16

Figure 5-1. A schematic representation of radioactivity movement among respiratory tract, gastrointestinal tract, and blood 5-11

Figure 5-2. The ICRP Task Group lung model for particulates 5-16

Figure 7-1. Example of the output of a risk assessment using quantitative uncertainty analysis . . . 7-3

Figure 7-2. Cumulative probability distributions for risk 7-24

Figure C-1 Example of the output of a risk assessment using quantitative uncertainty analysis . . . C-3

000010

1. INTRODUCTION

1.1 HISTORY OF STANDARDS DEVELOPMENT

In 1977, Congress amended the Clean Air Act (the Act) to address emissions of radioactive materials. Before 1977, these emissions were either regulated under the Atomic Energy Act or unregulated. Section 122 of the Act required the Administrator of the U.S. Environmental Protection Agency (EPA), after providing public notice and opportunity for public hearings (44 FR 21704, April 11, 1979), to determine whether emissions of radioactive pollutants cause or contribute to air pollution that may reasonably be expected to endanger public health. On December 27, 1979, EPA published a notice in the Federal Register listing radionuclides as hazardous air pollutants under Section 112 of the Act (44 FR 76738, December 27, 1979). To support this determination, EPA published a report entitled "Radiological Impact Caused by Emissions of Radionuclides into Air in the United States, Preliminary Report" (EPA 520/7-79-006, Office of Radiation Programs, U.S. EPA, Washington, D.C., August 1979).

On June 16, 1981, the Sierra Club filed suit in the U.S. District Court for the Northern District of California pursuant to the citizens' suit provision of the Act (Sierra Club v Gorsuch, No. 81-2436 WTS). The suit alleged that EPA had a nondiscretionary duty to propose standards for radionuclides under Section 112 of the Act within 180 days after listing them. On September 30, 1982, the Court ordered EPA to publish proposed regulations establishing emissions standards for radionuclides, with a notice of hearing within 180 days of the date of that order.

On April 6, 1983, EPA published a notice in the Federal Register proposing standards for radionuclide emission sources in four categories: (1) DOE facilities, (2) Nuclear Regulatory Commission facilities, (3) underground uranium mines, and (4) elemental phosphorus plants. Several additional categories of sources that emit radionuclides were identified, but it was determined that there were good reasons for not proposing standards for them. These source categories were (1) coal-fired boilers; (2) the phosphate industry; (3) other mineral extraction industries; (4) uranium fuel cycle facilities, uranium tailings, and high-level waste management; and (5) low energy accelerators (48 FR 15077, April 6, 1983). To EPA's knowledge, these comprise the source categories that release potentially regulative amounts of radionuclides to the air.

To support these proposed standards and determinations, EPA published a draft report entitled "Background Information Document, Proposed Standards for Radionuclides" (EPA 520/1-83-001, Office of Radiation Programs, U.S. EPA, Washington, D.C., March 1983).

EPA PROJECT LIBRARY

000011

Following publication of the proposed standards, EPA held an informal public hearing in Washington, D.C., on April 28 and 29, 1983. The comment period was held open an additional 30 days to receive written comments. Subsequently, EPA received a number of requests to extend the time for submission of public comments and to accommodate persons who were unable to attend the first public hearing. In response to these requests, EPA published a notice in the Federal Register that extended the comment period by an additional 45 days and held an additional informal public hearing in Denver, Colorado, on June 14, 1983 (48 FR 23655, May 26, 1983).

On February 17, 1984, the Sierra Club again filed suit in the U.S. District Court for the Northern District of California pursuant to the citizens' suit provision of the Act (Sierra Club v Ruckelshaus, No. 84-0656 WHO). The suit alleged that EPA had a nondiscretionary duty to issue final emissions standards for radionuclides or to find that they do not constitute a hazardous air pollutant (i.e., "de-list" the pollutant). In August 1984, the Court granted the Sierra Club motion and ordered EPA to take final actions on radionuclides by October 23, 1984.

On October 22, 1984, the Agency issued its Background Information Document in support of the Agency's final action on radionuclides. The report contains an integrated risk assessment that provides the scientific basis for these actions (EPA 520/1-84-022-1).

On February 6, 1985, National Emission Standards for Hazardous Air Pollutants (NESHAPS) were promulgated for radionuclide emissions from DOE facilities, NRC-licensed and non-DOE Federal facilities, and elemental phosphorus plants (50 FR 5190). Two additional radionuclide NESHAPS, covering radon-222 emissions from underground uranium mines and licensed uranium mill tailings, were promulgated on April 17, 1985 (50 FR 15386) and September 24, 1986 (51 FR 34056), respectively.

The EPA's basis for the radionuclide NESHAPS was challenged in lawsuits filed by the Sierra Club and the National Resources Defense Council (NRDC). While these suits were under adjudication, the U.S. Court of Appeals for the District of Columbia issued a decision finding that the EPA's NESHAP for vinyl chloride was defective in that costs had been improperly considered in setting the standard. Following the Court's order to review the potential effects of the vinyl chloride decision on other standards, the EPA determined that costs had been considered in many rulemakings on radionuclide emissions. On December 9, 1987, the Court accepted the EPA's proposal to leave the existing radionuclide NESHAPS in place while the Agency reconsidered the standards. In the interim, the suits filed by the Sierra Club and the NRDC have been placed in abeyance.

1.2 PURPOSE OF THE FINAL BACKGROUND INFORMATION DOCUMENT

Volume I contains background information on radiation protection programs and a detailed description of the Agency's procedures and methods for estimating radiation dose and risk due to radionuclide emissions to the air. This material is arranged as shown in the following descriptions of the chapters:

- Chapter 2 - A summary of regulatory programs for radiation protection and the current positions of the various national and international advisory bodies and state and Federal agencies in regard to radiation.

- Chapter 3 - A description of what makes radiation hazardous, the evidence that proves the hazard, and the evidence that relates the amount of radiation exposure to the amount of risk.

- Chapter 4 - An explanation of how radionuclides, once released into the air, move through the environment and eventually cause radiation exposure of people. This chapter also contains a description of how EPA estimates the amounts of radionuclides in the environment, i.e., in the air, on surfaces, in the food chain, and in exposed humans.

- Chapter 5 - A description of how radionuclides, once inhaled and ingested, move through the body to organs and expose these organs. This chapter also contains a description of how EPA estimates the amounts of radiation dose due to this radiation exposure of organs. It also describes how the amount of radiation dose is estimated when the source of radiation is gamma rays from a source outside of the body.

- Chapter 6 - A description of how the risk of fatal cancers and genetic effects is estimated once the amount of radiation dose is known.

- Chapter 7 - A summary of the uncertainties in the dose and risk estimates of source categories emitting significant amounts of radionuclides, which were made by using the procedures and information in the previous chapters. Associated uncertainties are discussed in the appropriate chapter, but overall uncertainties are discussed in this chapter.

Volume I also contains three appendices. Appendix A describes the environmental transfer factors used in the dose assessment models. Appendix B describes the mechanics of the life table analysis used to estimate risk. Appendix C presents an overview of the quantitative uncertainty analysis techniques currently under review for use as a method for expanding the semiquantitative uncertainty analysis provided in Volume I.

Volume II contains detailed risk estimates for each source of emissions, which were performed according to the procedures given in Volume I. Each chapter in Volume II addresses four topics: (1) the source category, the processes that result in releases of radionuclides to the environment, and existing controls, (2) the bases for the risk assessment, including reported emissions, source terms used, and other site parameters relevant to the dose assessment, (3) the results of the dose and risk calculation, along with an extrapolation to the entire category, and (4) a description of supplementary emissions controls and their cost and effectiveness in reducing dose and risk.

Two appendices are also provided in Volume II. Appendix A presents the detailed AIRDOS input sheets used to calculate individual and population doses and risks associated with each category. Appendix B presents the methodology used to evaluate the costs and effectiveness of earthen covers to control radon emissions from area sources of radon.

1.3 UPDATE METHODOLOGY

The categories of emissions addressed in this document are similar to those addressed in the 1984 Background Information Document. DOE and NRC-licensed facilities, elemental phosphorus plants, underground uranium mines, and licensed uranium mills are addressed because they are covered by NESHAPS. Uranium fuel cycle facilities, high-level waste disposal facilities, coal-fired boilers, and inactive uranium mill tailings sites are addressed because of challenges to previous determinations that they were adequately covered by other laws. Surface uranium mines, DOE radon, and phosphogypsum stacks are addressed because of challenges to the EPA's lack of risk assessment for these facilities. In sum, this Background Information Document addresses the following categories of radiological emissions to air:

- DOE Facilities
- NRC-Licensed and Non-DOE Federal Facilities
- Uranium Fuel Cycle Facilities
- High-Level Waste
- Elemental Phosphorus Plants
- Coal-fired Boilers
- Inactive Uranium Mill Tailings
- Licensed Uranium Mill Tailings
- DOE Radon
- Underground Uranium Mines
- Surface Uranium Mines
- Phosphogypsum Stacks

For each category, Volume II presents updated information on the number of facilities, radionuclide emissions to air, and control technologies. Depending on the number of facilities in a category, risks are provided for individual facilities, or a set

of reference facilities is defined that conservatively represents the category. Risks to the critical population group and the population within 80 km are presented for each category.

EPA recognizes that when it performed a risk assessment to determine the need for regulation of uranium mill tailings under the Uranium Mill Tailings Radiation Control Act (UMTRCA), the Agency considered the national health impact from the radon released from the tailings. In this assessment, EPA is considering only the health effects within 80 km of the source. EPA is using 80 km as the limit in order to be consistent with the other NESHAP rulemakings. This risk assessment in no way disputes the validity of the approach or the results used in the UMTRCA rulemaking.

2. CURRENT PROGRAMS AND STRATEGIES

2.1 INTRODUCTION

Awareness of radiation and radioactivity dates back only to the end of the last century--to the discovery of x-rays in 1895 and the discovery of radioactivity in 1896. These discoveries mark the beginning of radiation science and the deliberate use of radiation and radionuclides in science, medicine, and industry.

The findings of radiation science rapidly led to the development of medical and industrial radiology, nuclear physics, and nuclear medicine. By the 1920's, the use of x-rays in diagnostic medicine and industrial applications was widespread, and radium was being used by industry for luminescent dials and by doctors in therapeutic procedures. By the 1930's, biomedical and genetic researchers were studying the effects of radiation on living organisms, and physicists were beginning to understand the mechanisms of spontaneous fission and radioactive decay. By the 1940's, a self-sustaining fission reaction was demonstrated, which led directly to the construction of the first nuclear reactors and atomic weapons.

Developments since the end of World War II have been rapid. Today the use of x-rays and radioactive materials is widespread and includes:

- Nuclear reactors (and their supporting fuel-cycle facilities) generate electricity, power ships and submarines, produce radioisotopes for research, space, defense, and medical applications. They are also used as research tools for nuclear engineers and physicists.

- Particle accelerators produce radioisotopes and are used as research tools for studying the structure of materials and atoms.

- The radiopharmaceutical industry provides the radioisotopes needed for biomedical research and nuclear medicine.

- Nuclear medicine has developed as a recognized medical specialty in which radioisotopes are used in the diagnosis and treatment of numerous diseases.

- X-rays are widely used as a diagnostic tool in medicine and in such diverse industrial fields as oil exploration and nondestructive testing.

- Radionuclides are used in such common consumer products as luminous-dial wristwatches and smoke detectors.

The following sections of this chapter provide a brief history of the evolution of radiation protection philosophy and

an outline of the current regulatory programs and strategies of the government agencies responsible for ensuring that radiation and radionuclides are used safely.

2.2 THE INTERNATIONAL COMMISSION ON RADIOLOGICAL PROTECTION AND THE NATIONAL COUNCIL ON RADIATION PROTECTION AND MEASUREMENTS

Initially, the dangers and risks posed by x-rays and radioactivity were little understood. By 1896, however, "x-ray burns" were being reported in the medical literature, and by 1910, it was understood that such "burns" could also be caused by radioactive materials. By the 1920's, sufficient direct evidence (from experiences of radium dial painters, medical radiologists, and miners) and indirect evidence (from biomedical and genetic experiments with animals) had been accumulated to persuade the scientific community that an official body should be established to make recommendations concerning human protection against exposure to x-rays and radium.

At the Second International Congress of Radiology meeting in Stockholm, Sweden, in 1928, the first radiation protection commission was created. Reflecting the use of radiation and radioactive materials at the time, the body was named the International X-ray and Radium Protection Commission and was charged with developing recommendations concerning protection from radiation. In 1950, to reflect better its role in a changing world, the Commission was reconstituted and renamed the International Commission on Radiological Protection (ICRP).

During the Second International Congress of Radiology, the newly created Commission suggested to the nations represented at the Congress that they appoint national advisory committees to represent their viewpoints before the ICRP, and to act in concert with the Commission in developing and disseminating recommendations on radiation protection. This suggestion led to the formation, in 1929, of the Advisory Group. After a series of reorganizations and name changes, this committee emerged in 1964 in its present form as the congressionally chartered National Council on Radiation Protection and Measurements (NCRP). The congressional charter provides for the NCRP to:

- Collect, analyze, develop, and disseminate in the public interest information and recommendations about radiation protection and radiation quantities, units, and measurements.

- Develop basic concepts about radiation protection and radiation quantities, units, and measurements, and the application of these concepts.

- Provide a means by which organizations concerned with radiation protection and radiation quantities, units, and measurements may cooperate to use their combined

resources effectively and to stimulate the work of such organizations.

- Cooperate with the ICRP and other national and international organizations concerned with radiation protection and radiation quantities, units, and measurements.

Throughout their existence, the ICRP and the NCRP have worked together closely to develop radiation protection recommendations that reflect the current understanding of the dangers associated with exposure to ionizing radiation. The ICRP and the NCRP function as non-government advisory bodies. Their recommendations are not binding on any government or user of radiation or radioactive materials.

The first exposure limits adopted by the ICRP and the NCRP (ICRP34, ICRP38, and NCRP36) established 0.2 roentgen/day[1] as the "tolerance dose" for occupational exposure to x-rays and gamma radiation from radium. This limit, equivalent to an absorbed dose of approximately 25 rads/y as measured in air, was established to guard against the known effects of ionizing radiation on superficial tissue, changes in the blood, and "derangement" of internal organs, especially the reproductive organs. At the time the recommendations were made, high doses of radiation were known to cause observable effects, but the epidemiological evidence at the time was inadequate even to imply the carcinogenic induction effects of moderate or low doses. Therefore, the aim of radiation protection was to guard against known effects, and the "tolerance dose" limits that were adopted were believed to represent the level of radiation that a person in normal health could tolerate without suffering observable effects. The concept of a tolerance dose and the recommended occupational exposure limit of 0.2 R/day for x and gamma radiation remained in effect until the end of the 1940's. The recommendations of the ICRP and the NCRP made no mention of exposure of the general populace.

By the end of World War II, the widespread use of radioactive materials and scientific evidence of genetic and somatic effects at lower doses and dose rates suggested that the radiation protection recommendations of the NCRP and the ICRP would have to be revised downward.

By 1948, the NCRP had formulated its position on appropriate new limits. These limits were largely accepted by the ICRP in its recommendations of 1950 and formally issued by the NCRP in 1954 (ICRP51, NCRP54). Whereas the immediate effect was to lower

---

[1] The NCRP's recommendation was 0.1 roentgen/day measured in air. This limit is roughly equivalent to the ICRP limit, which was conventionally measured at the point of exposure and included backscatter.

the basic whole body occupational dose limit to the equivalent of 0.3 rad/week (approximately 15 rads/y), the revised recommendations also embodied several new and important concepts in the formulation of radiation protection criteria.

First, the recommendations recognized the difference in the effects of various types and energies of radiation; both ICRP and NCRP recommendations include discussions of the weighting factors that should be applied to radiations of differing types and energies. The NCRP advocated the use of the "rem" to express the equivalence in biological effect between radiations of differing types and energy.[2] Although the ICRP noted the shift toward the acceptance of the rem, it continued to express its recommendations in terms of the rad, with the caveat that the limit for the absorbed dose due to neutron radiation should be one-tenth the limit for x, gamma, or beta radiation.

Second, the recommendations of both organizations introduced the concept of critical organs and tissues. This concept was intended to ensure that no tissue or organ, with the exception of the skin, would receive a dose in excess of that allowed for the whole body. At the time, scientific evidence was lacking on tissues and organs. Thus, all blood-forming organs were considered critical and were limited to the same exposure as the whole body.

Third, the NCRP recommendations included the suggestion that individuals under the age of 18 receive no more than one-tenth the exposure allowed for adults. The reasoning behind this particular recommendation is interesting, as it reflects clearly the limited knowledge of the times. The scientific evidence indicated a clear relationship between accumulated dose and genetic effect. However, this evidence was obtained exclusively from animal studies that had been conducted with doses ranging

---

[2] Defining the exact relationship between exposure, absorbed dose, and dose equivalent is beyond the scope of this document. In simple terms, the exposure is a measure of the charge induced by x and gamma radiation in air. Absorbed dose is a measure of the energy per unit mass imparted to matter by radiation. Dose equivalent is an indicator of the effect on an organ or tissue by weighting the absorbed dose with a quality factor, Q, dependent on the radiation type and energy. The customary units for exposure, absorbed dose, and dose equivalent are the roentgen, rad and rem, respectively. Over the range of energies typically encountered, the exposure, dose and dose equivalent from x and gamma radiation have essentially the same values in these units. For beta radiation, the absorbed dose and dose equivalent are generally equal also. At the time of these recommendations, a quality factor of 10 was recommended for alpha radiation. Since 1977, a quality factor of 20 has primarily been used, i.e., for alpha radiation, the dose equivalent is 20 times the absorbed dose.

from 25 to thousands of rads. There was no evidence from exposure less than 25 rads accumulated dose, and the interpretation of the animal data and the implications for humans were unclear and did not support a specific permissible dose. The data did suggest that genetic damage was more dependent on accumulated dose than previously believed, but experience showed that exposure for prolonged periods to the permissible exposure limit (1.0 R/week) did not result in any observable genetic effects. The NCRP decided that it was not necessary to change the occupational limit to provide additional protection beyond that provided by the reduction in the permissible exposure limit of 0.3 R/week. At the same time, it recommended limiting the exposure of individuals under the age of 18 to assure that they did not accumulate a genetic dose that would later preclude their employment as radiation workers. The factor of ten was rather arbitrary but was believed to be sufficient to protect the future employability of all individuals (NCRP54).

Fourth, the concept of a tolerance dose was replaced by the concept of a maximum permissible dose. The change in terminology reflected the increasing awareness that any radiation exposure might involve some risk and that repair mechanisms might be less effective than previously believed. Therefore, the concept of a maximum permissible dose (expressed as dose per unit of time) was adopted because it better reflected the uncertainty in our knowledge than did the concept of tolerance dose. The maximum permissible dose was defined as the level of exposure that entailed a small risk compared with those posed by other hazards in life (ICRP51).

Finally, in explicit recognition of the inadequacy of our knowledge regarding the effects of radiation and of the possibility that any exposure might have some potential for harm, the recommendations included an admonition that every effort should be made to reduce exposure to all kinds of ionizing radiation to the lowest possible level. This concept, known originally as ALAP (as low as practicable) and later as ALARA (as low as reasonably achievable), would become a cornerstone of radiation protection philosophy.

During the 1950's, a great deal of scientific evidence on the effects of radiation became available from studies of radium dial painters, radiologists, and survivors of the atomic bombs dropped on Japan. This evidence suggested that genetic effects and long-term somatic effects were more important at low doses than previously considered. Thus, by the late 1950's, the ICRP and NCRP recommendations were again revised (ICRP59, NCRP59). These revisions include the following major changes: the maximum permissible occupational dose for whole body exposure and the most critical organs (blood forming organs, gonads, and the larger lens of the eye) was lowered to 5 rems/y, with a quarterly limit of 3 rems; the limit for exposure of other organs was set at 30 rems/y; internal exposures were controlled by a comprehensive set of maximum permissible concentrations of

radionuclides in air and water based on the most restrictive case of a young worker; and recommendations were included for some nonoccupational groups and for the general population (for the first time).

The lowering of the maximum permissible whole-body dose from 0.3 rad/week to 5 rems/y, with a quarterly limit of 3 rems, reflects both the new evidence and the uncertainties of the time. Although no adverse effects had been observed among workers who had received the maximum permissible dose of 0.3 rad/week, there was concern that the lifetime accumulation of as much as 750 rads (15 rads/y times 50 years) was too much. Lowering the maximum permissible dose by a factor of three was believed to provide a greater margin of safety. At the same time, operational experience showed that a limit of 5 rems/y could be met in most instances, particularly with the additional operational flexibility provided by expressing the limit on an annual and quarterly basis.

The recommendations given for nonoccupational exposures were based on concerns about genetic effects. The evidence available suggested that genetic effects were primarily dependent on the total accumulated dose. Thus, having sought the opinions of respected geneticists, the ICRP and the NCRP adopted the recommendation that accumulated gonadal dose to age 30 be limited to 5 rems from sources other than natural background and medical exposure. As an operational guide, the NCRP recommended that the maximum dose to any individual be limited to 0.5 rem/y, with maximum permissible body burdens of radionuclides (to control internal exposures) set at one-tenth that allowed for radiation workers. These values were derived from consideration of the genetically significant dose to the population and were established "primarily for the purpose of keeping the average dose to the whole population as low as reasonably possible, and not because of the likelihood of specific injury to the individual" (NCRP59).

In the late 1950's and early 1960's, the ICRP and NCRP again lowered the maximum permissible dose limits (ICRP65, NCRP71). The considerable scientific data on the effects of exposure to ionizing radiation were still inconclusive with respect to the dose response relationship at low exposure levels; thus, both organizations continued to stress the need to keep all exposures to the lowest possible level.

The NCRP and the ICRP made the following similar recommendations:

- Limit the dose to the whole-body, red bone marrow, and gonads to 5 rems in any year, with a retrospective limit of 10 to 15 rems in any given year as long as total accumulated dose did not exceed 5X(N-18), where N is the age in years.

- Limit the dose to the skin, hands, and forearms to 15, 75, and 30 rems per year, respectively.
- Limit the dose to any other organ or tissue to 15 rems per year.
- Limit the average dose to the population to 0.17 rem per year.

The scientific evidence and the protection philosophy on which the above recommendations were based were set forth in detail in NCRP71. In the case of occupational exposure limits, the goal of protection was to ensure that the risks of genetic and somatic effects were small enough to be comparable to the risks experienced by workers in other safe industries. The numerical limits recommended were based on the linear, no-threshold, dose-response model and were believed to represent a level of risk that was readily acceptable to an average individual. For nonoccupational exposures, the goal of protection was to ensure that the risks of genetic or somatic effects were small compared with other risks encountered in everyday life. The derivation of specific limits was complicated by the unknown dose-response relationship at low exposure levels and the fact that the risks of radiation exposure did not necessarily accrue to the same individuals who benefited from the activity responsible for the exposure. Therefore, it was necessary to derive limits that adequately protected each member of the public and to the gene pool of the population as a whole, while still allowing the development of beneficial uses of radiation and radionuclides.

In 1977, the ICRP made a fundamental change in its recommendations when it abandoned the critical organ concept in favor of the weighted whole-body effective dose equivalent concept for limiting occupational exposure (ICRP77). The change, made to reflect an increased understanding of the differing radiosensitivity of the various organs and tissues, did not affect the overall limit of 5 rems per year for workers, but included a recommendation that chronic exposures of the general public from all controllable sources be limited to no more than 0.5 rem/y to critical groups, which should result in average exposures to the public of less than 0.1 rem/y.

Also significant, ICRP's 1977 recommendations represent the first explicit attempt to relate and justify permissible radiation exposures with quantitative levels of acceptable risk. Thus, average occupational exposures (approximately 0.5 rem/y) are equated with risks in safe industries, given as 1.0 E-4 annually. At the maximum limit of 5 rems/y, the risk is equated with that experienced by some workers in recognized hazardous occupations. Similarly, the risks implied by the nonoccupational limit of 0.5 rem/y are equated to levels of risk of less than 1.0 E-2 in a lifetime; the general populace's average exposure is equivalent to a lifetime risk on the order of 1.0 E-4 to 1.0 E-3.

The ICRP believed these levels of risk were in the range that most individuals find acceptable.

In June 1987, the NCRP revised its recommendations to be comparable with those of the ICRP (NCRP87). The NCRP adopted the effective dose equivalent concept and its related recommendations regarding occupational and nonoccupational exposures to acceptable levels of risk. However, the NCRP did not adopt a fully risk-based system because of the uncertainty in the risk estimates and because the details of such a system have yet to be elaborated.

The NCRP recommendations in (NCRP87) for occupational exposures correspond to the ICRP recommendations. In addition, the relevant nonoccupational exposure guidelines, which the NCRP first recommended in 1984 (NCRP84a), are:

- 0.5 rem/y effective whole-body dose equivalent, not including background or medical radiation, for individuals in the population when the exposure is not continuous.

- 0.1 rem/y effective whole-body dose equivalent, not including background or medical radiation, for individuals in the population when the exposure is continuous.

- Continuous use of a total dose limitation system based on justification of every exposure and application of the "as low as reasonably achievable" philosophy.

The NCRP equates continuous exposure at a level of 0.1 rem/y to a lifetime risk of developing cancer of about one in a thousand. The NCRP has not formulated exposure limits for specific organs, but it notes that the permissible limits will necessarily be higher than the whole-body limit in inverse ratio for a particular organ to the total risk for whole-body exposure.

In response to EPA's proposed national emission standards for radionuclides, the NCRP suggested that since the 0.1 rem/y limit is the limit for all exposures from all sources (excluding natural background and medical radiation), the operator of any site responsible for more than 25 percent of the annual limit be required to assure that the exposure of the maximally exposed individual is less than 0.1 rem/y from all sources (NCRP84b, NCRP87).

2.3 FEDERAL GUIDANCE

The wealth of new scientific information on the effects of radiation that became available in the 1950's prompted the President to establish an official government entity with responsibility for formulating radiation protection criteria and coordinating radiation protection activities. Executive Order

10831 established the Federal Radiation Council (FRC) in 1959. The Council included representatives from all of the Federal agencies concerned with radiation protection and acted as a coordinating body for all of the radiation activities conducted by the Federal government. In addition to its coordinating function, the Council's major responsibility was to "...advise the President with respect to radiation matters, directly or indirectly affecting health, including guidance for all Federal Agencies in the formulation of radiation standards and in the establishment and execution of programs of cooperation with States..." (FRC60).

The Council's first recommendations concerning radiation protection standards for Federal agencies were approved by the President in 1960. Based largely on the work and recommendations of the ICRP and the NCRP, the guidance established the following limits for occupational exposures:

- Whole-body head and trunk, active blood-forming organs, gonads, or lens of eye--not to exceed 3 rems in 13 weeks and total accumulated dose limited to 5 times the number of years beyond age 18.
- Skin of whole body and thyroid--not to exceed 10 rems in 13 weeks or 30 rems per year.
- Hands, forearms, feet, and ankles--not to exceed 25 rems in 13 weeks or 75 rems per year.
- Bone--not to exceed 0.1 microgram of Ra-226 or its biological equivalent.
- Any other organ--not to exceed 5 rems per 13 weeks or 15 rems per year.

Although these levels differ slightly from those recommended by NCRP and ICRP at the time, the differences did not represent any greater or lesser protection. In fact, the FRC not only accepted the levels recommended by the NCRP for occupational exposure, it adopted the NCRP's philosophy of acceptable risk for determining occupational exposure limits. Although quantitative measures of risk were not given in the guidance, the prescribed levels were not expected to cause appreciable bodily injury to an individual during his or her lifetime. Thus, while the possibility of some injury was not zero, it was expected to be so low as to be acceptable if there was any significant benefit derived from the exposure.

The guidance also established dose equivalent limits for members of the public. These were set at 0.5 rem per year (whole body) for an individual and an average of 5 rems in 30 years (gonadal) per capita. The guidance also provided for developing a suitable sample of the population as a basis for determining compliance with the limit when doses to all individuals are

unknown. Exposure of this population sample was not to exceed 0.17 rem per capita per year. The population limit of 0.5 rem to any individual per year was derived from consideration of natural background exposure. Natural background radiation varies by a factor of two to four from location to location.

In addition to the formal exposure limits, the guidance also established as Federal policy that there should be no radiation exposure without an expectation of benefit and that "every effort should be made to encourage the maintenance of radiation doses as far below this guide as practicable." The requirements to consider benefits and keep all exposure to a minimum were based on the possibility that there is no threshold dose for radiation. The linear non-threshold dose response was assumed to place an upper limit on the estimate of radiation risk. However, the FRC explicitly recognized that it might also represent the true level of risk. If so, then any radiation exposure carried some risk, and it was necessary to avoid all unproductive exposures and to keep all productive exposures as "far below this guide as practicable."

In 1967, the Federal Radiation Council issued guidance for the control of radiation hazards in uranium mining (FRC67). The need for such guidance was clearly indicated by the epidemiological evidence that showed a higher incidence of lung cancer in adult males who worked in uranium mines compared with the incidence in adult males from the same locations who had not worked in the mines. The guidance established specific exposure limits and recommended that all exposures be kept as far below the guide limits as possible. The limits chosen represented a tradeoff between the risks incurred at various exposure levels, the technical feasibility of reducing the exposure, and the benefits of the activity responsible for the exposure.

2.4 THE ENVIRONMENTAL PROTECTION AGENCY

In 1970, the functions of the Federal Radiation Council were transferred to the Administrator of the U.S. Environmental Protection Agency. In 1971, the EPA revised the Federal guidance for the control of radiation hazards in uranium mining (EPA71). Based on the risk levels associated with the exposure limits established in 1967, the upper limit of exposure was reduced by a factor of three. The EPA also provided guidance to Federal agencies in the diagnostic use of x-rays (EPA78). This guidance establishes maximum skin entrance doses for various types of routine x-ray examinations. It also establishes the requirement that all x-ray exposures be based on clinical indication and diagnostic need, and that all exposure of patients should be kept as low as reasonably achievable consistent with the diagnostic need.

In 1981, the EPA proposed new Federal guidance for occupational exposures to supersede the 1960 guidance (EPA81).

The 1981 recommended guidance follows, and expands upon, the principles set forth by the ICRP in 1977. This guidance was adopted as Federal policy in 1987 (EPA87).

The Environmental Protection Agency has various statutory authorities and responsibilities regarding regulation of exposure to radiation in addition to the statutory responsibility to provide Federal guidance on radiation protection. EPA's standards and regulations for controlling radiation exposures are summarized here.

Reorganization Plan No. 3 transferred to the EPA the authority under the U.S. Atomic Energy Act of 1954, as amended, to establish generally applicable environmental standards for exposure to radionuclides. Pursuant to this authority, in 1977 the EPA issued standards limiting exposure from operations of the light-water reactor nuclear fuel cycle (EPA77). These standards cover normal operations of the uranium fuel cycle, excluding mining and spent fuel disposal. The standards limit the annual dose equivalent to any member of the public from all phases of the uranium fuel cycle (excluding radon and its daughters) to 25 mrems to the whole body, 75 mrems to the thyroid, and 25 mrems to any other organ. To protect against the buildup of long-lived radionuclides in the environment, the standard also sets normalized emission limits for Kr-85, I-129, and Pu-239 combined with other transuranics with a half-life exceeding one year. The dose limits imposed by the standard cover all exposures resulting from releases to air and water from operations of fuel cycle facilities. The development of this standard took into account both the maximum risk to an individual and the overall effect of releases from fuel cycle operations on the population and balanced these risks against the costs of effluent control.

Under the authority of the Uranium Mill Tailings Radiation Control Act, the EPA has promulgated standards limiting public exposure to radiation from uranium tailings piles (EPA83a, (EPA83b). Whereas the standards for inactive and active tailings piles differ, a consistent basis is used for these standards. Again, the Agency sought to balance the radiation risks imposed on individuals and the population in the vicinity of the pile against the feasibility and costs of control.

Under the authority of the U.S. Atomic Energy Act of 1954, as amended, the EPA has promulgated 40 CFR 191, which establishes standards for disposal of spent fuel, high-level wastes, and transuranic elements (EPA82). The standard establishes two different limits: (1) during the active waste disposal phase, operations must be conducted so that no member of the public receives a dose greater than that allowed for other phases of the uranium fuel cycle; and (2) once the repository is closed, exposure is to be controlled by limiting releases. The release limits were derived by summing, over long time periods, the estimated risks to all persons exposed to radioactive materials released into the environment. The uncertainties involved in

estimating the performance of a theoretical repository led to this unusual approach, and the proposed standard admonishes the agencies responsible for constructing and operating such repositories to take steps to reduce releases below the upper bounds given in the standard to the extent reasonably achievable.

Under the authority of the Atomic Energy Act of 1954, as amended, and the Toxic Substance Control Act, the EPA is developing proposed environmental standards for the land disposal of low-level radioactive wastes and certain naturally occurring and accelerator-produced radioactive wastes. The proposed standards will establish (1) exposure limits for pre-disposal management and storage options, (2) criteria for other agencies to follow in specifying wastes that are Below Regulatory Concern (BRC), (3) post-disposal exposure limits, and (4) groundwater protection requirements. The proposed regulations are scheduled to be published in the Federal Register in late 1988 (Gr88).

Under the authority of the Safe Drinking Water Act, the EPA has issued interim regulations covering the permissible levels of radium, gross alpha and man-made beta, and photon-emitting contaminants in community water systems (EPA76). The limits are expressed in picocuries/liter. The limits chosen for man-made beta and photon emitters equate to approximately 4 mrems/y whole-body or organ dose to the most exposed individual.

Section 122 of the Clean Air Act amendments of 1977 (Public Law 95-95) directed the Administrator of the EPA to review all relevant information and determine if emissions of hazardous pollutants into air will cause or contribute to air pollution that may reasonably be expected to endanger public health. In December 1979, EPA designated radionuclides as hazardous air pollutants under Section 112 of the Act. On April 6, 1983, EPA published proposed National Emission Standards for radionuclides for selected sources in the Federal Register (48 CFR 15076). Three National Emission Standards for Hazardous Air Pollutants (NESHAPS), promulgated on February 6, 1985, regulated emissions from Department of Energy (DOE) and non-DOE Federal facilities, Nuclear Regulatory Commission (NRC) licensed facilities, and elemental phosphorus plants (FR85a). Two additional NESHAPS, covering radon emission from underground uranium mines and licensed uranium mill tailings, were promulgated on April 17, 1985 and September 24, 1986, respectively (FR85b, FR86).

2.5 NUCLEAR REGULATORY COMMISSION

Under the authority of the Atomic Energy Act of 1954, as amended, the NRC is responsible for licensing and regulating the use of byproduct, source, and special nuclear material, and for ensuring that all licensed activities are conducted in a manner that protects public health and safety. The Federal guidance on radiation protection applies to the NRC; therefore, the NRC must assure that none of the operations of its licensees exposes a member of the public to more than 0.5 rem/y. The dose limits

imposed by the EPA's standard for uranium fuel cycle facilities also apply to the fuel cycle facilities licensed by the NRC. These facilities are prohibited from releasing radioactive effluents in amounts that would result in doses greater than the 25 mrems/y limit imposed by that standard.

The NRC exercises its statutory authority by imposing a combination of design criteria, operating parameters, and license conditions at the time of construction and licensing. It assures that the license conditions are fulfilled through inspection and enforcement. The NRC licenses more than 7,000 users of radioactivity. The regulation of fuel cycle licensees is discussed separately from the regulation of byproduct material licensees.

2.5.1 Fuel Cycle Licenses

The NRC does not use the term "fuel cycle facilities" to define its classes of licensees. The term is used here to coincide with EPA's use of the term in its standard for uranium fuel cycle facilities. As a practical matter, this term includes the NRC's large source and special nuclear material and production and utilization facilities. The NRC's regulations require an analysis of probable radioactive effluents and their effects on the population near fuel cycle facilities. The NRC also ensures that all exposures are as low as reasonably achievable by imposing design criteria and specific equipment requirements on the licensees. After a license has been issued, fuel cycle licensees must monitor their emissions and take environmental measurements to ensure that they meet the design criteria and license conditions. For practical purposes, the NRC adopted the maximum permissible concentrations developed by the NCRP to relate effluent concentrations to exposure.

In the 1970's, the NRC formalized the implementation of as low as reasonably achievable exposure levels by issuing a regulatory guide for as low as reasonably achievable design criteria. This coincided with a decision to adopt, as a design criterion, a maximum permissible dose of 5-mrems/y from a single nuclear electric generating station. The 5 mrem limit applies to the most exposed individual actually living in the vicinity of the reactor and refers to whole-body doses from external radiation by air pathway (NRC77).

2.5.2 Byproduct Material Licenses

The NRC's licensing and inspection procedure for byproduct material users is less uniform than that imposed on major fuel cycle licensees for two reasons: (1) the much larger number of byproduct material licensees, and (2) their much smaller potential for releasing significant quantities of radioactive materials into the environment. The prelicensing assurance procedures of imposing design reviews, operating practices, and license conditions prior to construction and operation are similar.

The protection afforded the public from releases of radioactive materials from these facilities can vary considerably because of three factors. First, the requirements that the NRC imposes for monitoring effluents and environmental radioactivity are much less stringent for these licensees. If the quantity of materials handled is small enough, the NRC might not impose any monitoring requirements. Second, and more important, the level of protection can vary considerably because the exact point where the licensee must meet the effluent concentrations for an area of unrestricted access is not consistently defined. Depending on the particular licensee, this area has been defined as the nearest inhabited structure, as the boundary of the user's property line, as the roof of the building where the effluents are vented, or as the mouth of the stack of vent. Finally, not all users are allowed to reach 100 percent of the maximum permissible concentration in their effluents. In fact, the NRC has placed as low as reasonably achievable requirements on many of their licensees by limiting them to 10 percent of the maximum permissible concentration in their effluents.

2.6 DEPARTMENT OF ENERGY

The DOE operates a complex of national laboratories and weapons facilities. These facilities are not licensed by the NRC. The DOE is responsible, under the U.S. Atomic Energy Act of 1954, as amended, for ensuring that these facilities are operated in a manner that does not jeopardize public health and safety.

The DOE is subject to the Federal guidance on radiation protection issued by EPA and its predecessor, the FRC. For practical purposes, the DOE has adopted the NCRP's maximum permissible concentrations in air and water as a workable way to ensure that the dose limits of 0.5 rem/y whole-body and 1.5 rems/y to any organ are being observed. The DOE also has a requirement that all doses be kept as low as is reasonably achievable, but the contractors who operate the various DOE sites have a great deal of latitude in implementing policies and procedures to ensure that all doses are kept to the lowest possible level.

The DOE ensures that its operations are within its operating guidelines by requiring its contractors to maintain radiation monitoring systems around each of its sites and to report the results in an annual summary report. New facilities and modifications to existing facilities are subject to extensive design criteria reviews (similar to those used by the NRC). During the mid-1970's, the DOE initiated a systematic effluent reduction program that resulted in the upgrading of many facilities and effected a corresponding reduction in the effluents (including airborne and liquid radioactive materials) released to the environment.

As a continuation of this program, DOE has issued proposed Order 5400.3 "Draft Radiation Protection of the Public and the

Environment" and has issued several internal guidance documents including procedures for the calculation of internal and external doses to the public and guidance on environmental surveillance.

2.7 OTHER FEDERAL AGENCIES

2.7.1 Department Of Defense

The Department of Defense operates several nuclear installations, including a fleet of nuclear-powered submarines and their shore support facilities. The DOD, like other Federal agencies, must comply with Federal radiation protection guidance. The DOD has not formally adopted any more stringent exposure limits for members of the public than the 0.5 rem/y allowed by the Federal guidance.

2.7.2 Center for Medical Devices and Radiological Health

Under the Radiation Control Act of 1968, the major responsibility of the Center for Medical Devices and Radiological Health in the area of radiation protection is the specification of performance criteria for electronic products, including x-ray equipment and other medical devices. This group also performs environmental sampling in support of other agencies, but no regulatory authority is involved.

2.7.3 Mine Safety and Health Administration

The Mine Safety and Health Administration (MSHA) has the regulatory authority to set standards for exposures of miners to radon and its decay products and other (nonradiological) pollutants in mines. The MSHA has adopted the Federal guidance for exposure of uranium miners (EPA71). It has no authority or responsibility for protecting members of the general public from the hazards associated with radiation.

2.7.4 Occupational Safety and Health Administration

The Occupational Safety and Health Administration (OSHA) is responsible for assuring a safe workplace for all workers. This authority, however, does not apply to radiation workers at government-owned or NRC-licensed facilities. This group does have the authority to set exposure limits for workers at unlicensed facilities, such as particle accelerators, but it does not have any authority to regulate public exposure to radiation. OSHA has adopted the occupational exposure limits of the NRC, except it has not imposed the requirement to keep all doses as low as is reasonably achievable.

2.7.5 Department of Transportation

The Department of Transportation (DOT) has statutory responsibility for regulating the shipment and transportation of

radioactive materials. This authority includes the responsibility to protect the public from exposure to radioactive materials while they are in transit. For practical purposes, the DOT has implemented its authority through the specification of performance standards for shipment containers and by setting maximum exposure rates at the surface of any package containing radioactive materials. These limits were set to assure compliance with the Federal guidance for occupational exposure, and they are believed to be sufficient to protect the public from exposure. The DOT also controls potential public exposure by managing the routing of radioactive shipments to avoid densely populated areas.

2.8 STATE AGENCIES

States have important authority for protecting the public from the hazards associated with ionizing radiation. In 26 states, the states have assumed NRC's inspection, enforcement, and licensing responsibilities for users of source and byproduct materials and users of small quantities of special nuclear material. These "NRC Agreement States," which license and regulate more than 11,500 users of radiation and radioactive materials, are bound by formal agreements to adopt requirements consistent with those imposed by the NRC. The NRC continues to perform this function for all licensable uses of the source, byproduct, and special nuclear material in the 24 states that are not Agreement States.

Nonagreement states, as well as NRC Agreement States, regulate the exposures to workers from electronic sources of radiation. Also, all states retain the authority to regulate the use of naturally occurring (i.e., radium) and accelerator-produced radioactive materials.

2.9 REFERENCES

EPA71 U.S. Environmental Protection Agency, "Radiation Protection Guidance for Federal Agencies: Underground Mining of Uranium Ore," Federal Register 36(132), July 9, 1971.

EPA76 U.S. Environmental Protection Agency, National Interim Primary Drinking Water Regulations, EPA-570/9-76-003, 1976.

EPA77 U.S. Environmental Protection Agency, "Environmental Radiation Protection Standards for Nuclear Power Operations," 40 CFR 190, Federal Register 42(9), January 13, 1977.

EPA78 U.S. Environmental Protection Agency, "Radiation Protection Guidance to Federal Agencies for Diagnostic X-Rays," Federal Register 43(22), February 1, 1978.

EPA81 U.S. Environmental Protection Agency, "Federal Radiation Protection Guidance for Occupational Exposure," Federal Register 46(15), January 23, 1981.

EPA82 U.S. Environmental Protection Agency, "Environmental Standards for the Management and Disposal of Spent Nuclear Fuel, High-Level and Transuranic Radioactive Wastes," 40 CFR 191, Federal Register 47(250), December 29, 1982.

EPA83a U.S. Environmental Protection Agency, "Standards for Remedial Actions at Inactive Uranium Processing Sites," Federal Register 48(590), January 5, 1983.

EPA83b U.S. Environmental Protection Agency, "Environmental Standards for Uranium Mill Tailings at Licensed Commercial Processing Sites; Final Rule," Federal Register 48(196), October 7, 1983.

EPA87 U.S. EPA, "Radiation Protection Guidance to Federal Agencies for Occupational Exposure," Federal Register 52 (2822), January 27, 1987.

FR85a Federal Register 50, 5190-5200, February 6, 1985.

FR85b Federal Register 50, 15386-15394, April 17, 1985.

FR86 Federal Register 51, 34056-34067, September 24, 1986.

FRC60 Federal Radiation Council, "Radiation Protection Guidance for Federal Agencies," Federal Register 44(02), May 18, 1960.

FRC67 Federal Radiation Council, Guidance for the Control of Radiation Hazards in Uranium Mining, Report No. 8, September 1967.

Gr88 Gruhlke, J.M., Galpin, F.L., and Holcomb, W.F., "Overview of EPA's Environmental Standards for the Land Disposal of LLW and NARM Waste-1988," ORP/EPA, for presentation at DOE's 10th Annual LLW Management Conference, Denver, Colorado, August 30 - September 1, 1988.

ICRP34 International X-Ray and Radium Protection Commission, "International Recommendations for X-Ray and Radium Protection," British Journal of Radiology 7, 695-699, 1934.

ICRP38 International X-Ray and Radium Protection Commission, "International Recommendations for X-Ray and Radium Protection," Amer. J. of Roent and Radium 40, 134-138, 1938.

ICRP51 International Commission on Radiological Protection, "International Recommendations on Radiological Protection 1950," British Journal of Radiology 24, 46-53, 1951.

ICRP59 International Commission on Radiological Protection, Recommendations of the ICRP 1958, ICRP Publication 1, Pergamon Press, Oxford, 1958.

ICRP65 International Commission on Radiological Protection, Recommendations of the ICRP 1965, ICRP Publication 9, Pergamon Press, Oxford, 1965.

ICRP77 International Commission on Radiological Protection, Recommendations of the ICRP, ICRP Publication 26, Pergamon Press, Oxford, 1977.

NCRP36 Advisory Committee on X-Ray and Radium Protection, X-Ray Protection, NCRP Report No. 3, 1936.

NCRP54 National Committee on Radiation Protection, Permissible Dose From External Sources of Ionizing Radiation, National Bureau of Standards Handbook 59, 1954.

NCRP59 National Committee on Radiation Protection, Maximum Permissible Body Burdens and Maximum Permissible Concentrations of Radionuclides in Air and in Water for Occupational Exposure, National Bureau of Standards Handbook 69, 1959.

NCRP71 National Council on Radiation Protection and Measurements, Basic Radiation Protection Criteria, NCRP Report No. 39, 1971.

NCRP84a National Council on Radiation Protection and Measurements, Exposures from the Uranium Series with emphasis on Radon and its Daughters, NCRP report 77, March 15, 1984.

NCRP84b National Council on Radiation Protection and Measurements, Control of Air Emissions of Radionuclides, September 18, 1984.

NCRP87 National Council on Radiation Protection and Measurements, Recommendations on Limits for Exposure to Ionizing Radiation, NCRP Report 91, June 1, 1987.

NRC77 U.S. Nuclear Regulatory Commission, 1977, Appendix I: 10 CFR 50, Federal Register 44, September 28, 1979.

3. HAZARD IDENTIFICATION

The adverse biological reactions associated with ionizing radiations, and hence with radioactive materials, are carcinogenicity, mutagenicity, and teratogenicity. Carcinogenicity is the ability to produce cancer. Mutagenicity is the property of being able to induce genetic mutation, which may be in the nucleus of either somatic (body) or germ (reproductive) cells. Teratogenicity refers to the ability of an agent to induce or increase the incidence of congenital malformations as a result of permanent structural or functional deviations produced during the growth and development of an embryo (these are more commonly referred to as birth defects).

Ionizing radiation causes injury by breaking constituent body molecules into electrically charged fragments called "ions" and thereby producing chemical rearrangements that may lead to permanent cellular damage. The degree of biological damage caused by various types of radiation varies according to how close together the ionizations occur. Some ionizing radiations (e.g., alpha particles) produce intense regions of ionization. For this reason, they are called high-LET (linear energy transfer) particles. Other types of radiation (such as high-energy photons [x-rays]) that release electrons that cause ionization and beta particles are called low-LET radiations because of the sparse pattern of ionization they produce. In equal doses, the carcinogenicity and mutagenicity of high-LET radiations are generally an order of magnitude or more greater than those of low-LET radiations.

Radium, radon, radon daughters, and several other naturally occurring radioactive materials emit alpha particles; thus, when these materials are ingested or inhaled, they are a source of high-LET particles within the body. Man-made radionuclides are usually beta and photon emitters of low-LET radiations. Notable exceptions to this generalization are plutonium and other transuranic radionuclides, most of which emit alpha radiation.

3.1 EVIDENCE THAT RADIATION IS CARCINOGENIC

The production and properties of x-rays were demonstrated within one month of the public reporting of Roentgen's discovery of x-rays. The first report of acute skin injury was made in 1896 (Mo67). The first human cancer attributed to this radiation was reported in 1902 (Vo02). By 1911, 94 cases of radiation-related skin cancer and 5 cases of leukemia in man had been reported in the literature (Up75). Efforts to study this phenomenon through the use of experimental animals produced the first reported radiation-related cancers in experimental animals in 1910 and 1912 (Ma10, Ma12). Since that time, an extensive body of literature has evolved on radiation carcinogenesis in man and animals. This literature has been reviewed most recently by the United Nations Scientific Committee on the Effects of Atomic Radiation (UNSCEAR) and by the National Academy of Sciences

Advisory Committee on the Biological Effects of Ionizing Radiations (NAS-BEIR Committee) (UNSCEAR88, NAS80).

Identification of the carcinogenicity of radioactive emissions followed a parallel course. In 1921, Uhlig first associated inhaled radioactive material and carcinogenesis in man in a study of lung cancer in underground miners in the Erz Mountains (Uh21). This association was reaffirmed by Ludewig and Lorenser in 1924 (Lu24). Ingestion of radioactive materials was also demonstrated to be a pathway for carcinogenesis in man. As early as 1925, ingested radium was known to cause bone necrosis (Ho25), and in 1929, the first report was published on the association of radium ingestion and osteogenic sarcoma (Ma29).

The expected levels of exposure to radioactive pollutants in the environment are too low to produce an acute (immediate) response. Their effect is more likely to be a delayed response, in the form of an increased incidence of cancer long after exposure. An increase in cancer incidence or mortality with increasing radiation dose has been demonstrated for many types of cancer in both human populations and laboratory animals (UNSCEAR77, 82). Studies of humans exposed to internal or external sources of ionizing radiation have shown that the incidence of cancer increases with increased radiation exposure. This increased incidence, however, is usually associated with appreciably greater doses and exposure frequencies than those encountered in the environment. Malignant tumors most often appear long after the radiation exposure, usually 10 to 35 years later (NAS80, UNSCEAR82). The tumors appear in various organs. In the case of internal sources of radiation due to radioactive materials, the metabolism of the materials generally leads to their deposition in specific organs, which results in a radiation dose and higher-than-normal risk of cancer in these organs.

Whereas many, if not most, chemical carcinogens appear to be organ- or tissue-specific, ionizing radiation can be considered pancarcinogenic. According to Storer (St75): "Ionizing radiation in sufficiently high dosage acts as a complete carcinogen in that it serves as both initiator and promoter. Further, cancers can be induced in nearly any tissue or organ of man or experimental animals by the proper choice of radiation dose and exposure schedule." Radiation-induced cancers in humans have been reported in the following tissues: thyroid, female breast, lung, bone marrow (leukemia), stomach, liver, large intestine, brain, salivary glands, bone, esophagus, small intestine, urinary bladder, pancreas, rectum, lymphatic tissues, skin, pharynx, uterus, ovary, mucosa of cranial sinuses, and kidney (UNSCEAR77, 82; NAS72, 80; Be77, Ka82, Wa83).

Studies of populations exposed to high levels of radiation have identified the organs at greatest risk following radiation exposure. Brief discussions of these findings follow.

1. Atomic Bomb Survivors - The survivors of the atomic bomb explosions at Hiroshima and Nagasaki, Japan, were exposed to whole-body external radiation doses of 0 to more than 200 rads.[1] An international group has been observing the population since 1950. The most recent reports published by this group (Ka82, Wa83) indicate that an increase in cancer mortality has been shown for many cancers, including leukemia; thyroid, breast, and lung cancer; esophageal and stomach cancer; colon cancer; cancer of urinary organs; and multiple myeloma.

2. Ankylosing Spondylitics - A large group of patients was given x-ray therapy for ankylosing spondylitis of the spine during the years 1934 to 1954. X-ray doses usually exceeded 100 rad. British investigators have been following this group since about 1957. The most recent review of the data shows excess cancers in irradiated organs, including leukemia, lymphoma, lung and bone cancer, and cancer of the pharynx, esophagus, stomach, pancreas, and large intestine (UNSCEAR88, NAS80).

3. Mammary Exposure - Several groups of women who were exposed to x-rays during diagnostic radiation of the thorax or during radio-therapy for conditions involving the breast have been studied. Although most of the groups have been followed only a relatively short time (about 15 years), a significant increase in the incidence of breast cancer has been observed (UNSCEAR88). The dose that produced these effects averaged about 100 rads.

4. Medical Treatment of Benign Conditions - Several groups of persons who were medically treated with x-rays to alleviate some benign conditions have been studied. Excess cancer has developed in many of the organs irradiated (e.g., breast, brain, thyroid, and probably salivary glands, skin, bone, and pelvic organs) following doses ranging from less than 10 to more than 100 rads (UNSCEAR88). Excess leukemia has also occurred in some groups. The followup period for most groups has been short, often less than 20 years.

5. Underground Miners - Studies of excess cancer mortality in U.S. underground miners exposed to elevated levels of radon started in the 1950's and 1960's. Groups that have worked in various types of mines, including uranium and fluorospar, are being studied in the United States, Canada, Great Britain, Sweden, China, and Czechoslovakia. Most of the miners studied have been subjected to high rates of exposure; however, a recent review indicates that increased incidence of lung cancer has been observed in some miners exposed at cumulative levels approximating those that can

---

[1] The rad is the unit of absorbed dose in common use; 1 rad equals 100 ergs of absorbed energy per gram of material.

occur wherever high environmental concentrations of radon are present (NAS88).

6. Ingested or Injected Radium - Workers who ingested Ra-226 while painting watch and clock dials have been studied for 35 to 45 years, and patients who received injections of Ra-226 or Ra-224 for medical purposes have been studied for 20 to 30 years (NAS72, 80). Excess incidence of leukemia and osteosarcoma related to Ra-224 exposure has been observed. Calculated cumulative average doses for these study groups ranged from 200 to 1,700 rads. A study now underway that deals with exposure levels under 90 rads should provide additional data (NAS80).

7. Injected Thorotrast - Medical use of Thorotrast (colloidal thorium dioxide) as an x-ray contrast medium introduced radioactive thorium and its daughters into a number of patients. Research studies have followed patients in Denmark, Portugal, Japan, and Germany for about 40 years and patients in the United States for about 10 years (UNSCEAR88, NAS80). An increased incidence of liver, bone, and lung cancer has been reported in addition to increased anemia, leukemia, and multiple myeloma (In79). Calculated cumulative doses range from tens to hundreds of rads.

8. Diagnostic X-ray Exposure During Pregnancy - Effects of x-ray exposure on the fetus during pregnancy have been studied in Great Britain since 1954, and several retrospective studies have been made in the United States since that time (NAS80, UNSCEAR88). Increased incidence of leukemia and other childhood cancers have been observed in populations exposed to absorbed doses of 0.2 to 20 rads in utero (NAS80, UNSCEAR88).

Not all of the cancers induced by radiation are fatal. The fraction of fatal cancers is different for each type of cancer. The BEIR III committee estimated the fraction of fatal cancers by site and sex (NAS80). Estimates of cancers by site ranged from about 10 percent fatal in the case of thyroid cancer to 100 percent fatal in the case of liver cancer. They concluded that, on the average, females have 2 times as many total cancers as fatal cancers following radiation exposure, and males have 1.5 times as many (NAS80). Although many of the radiation-induced cancers are not fatal, they still are costly and adversely affect the person's lifestyle for the remainder of his or her life. Just how these costs and years of impaired life should be weighed in evaluating the hazards of radiation exposure is not certain. This assessment addresses only the risk of fatal carcinogenesis.

In addition to the evidence that radiation is a pancarcinogen, and as such can induce cancers in nearly any

tissue or organ, it also appears that it can induce cancer by any route of exposure (dermal, inhalation, ingestion, and injection).

Inhalation is likely to be the major route of environmental exposure to airborne radioactive pollutants, and the principal organ at risk is likely to be the lung. Some radiation exposure to airborne pollutants by the ingestion route is possible, however, as these pollutants are deposited on soil, on plants, or in sources of water. Ingestion of inhaled particulates also occurs. Some radionuclides may also cause whole-body gamma radiation exposure while airborne or after their deposition on the ground.

Estimates of cancer risk are based on the absorbed dose of radiation in an organ or tissue. Given the same type of radiation, the risk for a particular dosage would be the same, regardless of the source of the radiation. Numerical estimates of the cancer risk posed by a unit dose of radiation in various organs and tissues are presented in Chapter 6. The models used to calculate radiation doses from a specific source are described in Chapters 4 and 5.

The overwhelming body of human epidemiological data makes it unnecessary to base major conclusions concerning the risk of radiation-induced cancers on evidence provided by animal tests; however, these data are relevant to the interpretation of human data (NAS80) and contribute additional evidence to the epidemiological database for humans. Radiation-induced cancers have been demonstrated in several animal species, including rats, mice, hamsters, guinea pigs, cats, dogs, sheep, cattle, pigs, and monkeys. Induced through multiple routes of administration and at multiple dose levels, these cancers have occurred in several organs or tissues. These animal studies have provided information on the significance of dose rate compared with the age of the animals at exposure, the sex of the animals, and the genetic characteristics of the test strain. They have shown that radiation-induced cancers become detectable after varying latent periods, sometimes several years after exposure. The studies further show that the total number of cancers that eventually develop varies consistently with the dose each animal receives. Experimental studies in animals have also established that the carcinogenic effect of high-LET radiation (alpha radiations or neutrons) is greater than that of low-LET radiation (x-rays or gamma rays).

A number of researchers have induced transformations in mammalian tissue culture, including embryonic cells of mice and hamsters (Bo84, Ke84, Ha84, Gu84). Chromosome aberrations in cultured human peripheral lymphocytes have been demonstrated at Rn-222 alpha doses of about 48 mrads/y with an external gamma dose of about 100 mrads/y (Po77). Another major finding of recent research (Gu84) is that DNA from radiation-induced mouse tumors contains an activated oncogene that can transform specific types of cultured cells when introduced into these cells. The

researchers also found that a difference in only one base in the oncogene was responsible for the transformation. Thus, radiation can induce tumors even when only a small change in the DNA occurs as a result of irradiation.

3.2 EVIDENCE THAT RADIATION IS MUTAGENIC

Radiation can change the structure, number, or genetic content of the chromosomes in a cell nucleus. These genetic radiation effects are classified as either gene mutations or chromosomal aberrations. Gene mutations refer to alterations of the basic units of heredity, the genes. Chromosomal aberrations refer to changes in the normal number or structure of chromosomes. Both gene mutation and chromosomal aberrations are heritable; therefore, they are considered together as genetic effects. Mutations and chromosomal aberrations can occur in somatic (body) or germ (reproductive) cells. In the case of germ cells, the mutagenic effect of radiation is not seen in those persons exposed to the radiation, but in their descendents.

Mutations often result in miscarriages or produce such undesirable changes in a population as congenital malformations that result in mental or physical defects. Mutations occur in many types of cells; no tendency toward any specific locus or chromosome has been identified. For this reason, they can affect any characteristic of a species. A relatively wide array of chromosome aberrations occurs in both humans and animals.

Early experimental studies showed that x-radiation is mutagenic. In 1927, H.J. Muller reported radiation-induced genetic changes in animals, and in 1928, L.J. Stadler reported such changes in plants (Ki62). Although genetic studies were carried out in the 1930's, mostly in plants and fruit flies (Drosophila), the bulk of the studies on mammals started after the use of nuclear weapons in World War II (UNSCEAR58).

Very few quantitative data are available on radiogenic mutations in humans, particularly from low-dose exposures, for the following reasons: these mutations are interspersed over many generations, some are so mild they are not noticeable, and some mutagenic defects that do occur are similar to nonmutagenic effects and are therefore not necessarily recorded as mutations. The bulk of data supporting the mutagenic character of ionizing radiation comes from extensive studies of experimental animals, mostly mice (UNSCEAR77, 82; NAS72, 80). These studies have demonstrated all forms of radiation mutagenesis--lethal mutations, translocations, inversions, nondisjunction, point mutations, etc. Mutation rates calculated from these studies are extrapolated to humans (because the basic mechanisms of mutations are believed to be the same in all cells) and form the basis for estimating the genetic impact of ionizing radiation on humans (NAS80, UNSCEAR82). The vast majority of the demonstrated mutations in human germ cells contribute to both increased mortality and illness (NAS80, UNSCEAR82). Moreover, the

radiation protection community is generally in agreement that the probability of inducing genetic changes increases linearly with dose and that no "threshold" dose is required to initiate heritable damage to germ cells.

Considerable evidence has been documented concerning the production of mutations in cultured cells exposed to radiation. Such mutations have been produced in Chinese hamster ovary cells, mouse lymphoma cells, human diploid fibroblasts, and human blood lymphocytes. Many of the radiation-induced specific types of mutations produced in human and Chinese hamster cultured cells are associated with structural changes in the X chromosome. Evidence suggests that these mutations may be largely due to deletions in the chromosomes.

Mutagenicity in human somatic cells has been demonstrated on the basis of chromosome aberrations detected in cultured lymphocytes. Chromosome aberrations in humans have been demonstrated in lymphocytes cultured from persons exposed to ingested Sr-90 and Ra-226 (Tu63); inhaled/ingested Rn-222, natural uranium, or Pu-239 (Br77); or inhaled Rn-222 (Po78); and in atomic bomb survivors (Aw78). Although no direct evidence of health impact currently exists, these chromosome aberrations demonstrate that mutagenesis is occurring in somatic cells of humans exposed to ionizing radiation.

Evidence of mutagenesis in human germ cells (cells of the ovary or testis) is less conclusive. Studies have been made of several populations exposed to medical radiation, atomic bomb survivors, and a population in an area of high background radiation in India (UNSCEAR77). Although these studies suggest an increased incidence of chromosomal aberrations in germ cells following exposure to ionizing radiation, the data are not convincing (UNSCEAR77). Investigators who analyzed the data on children born to survivors of the atomic bombings of Hiroshima and Nagasaki found no statistically significant genetic effects due to parental exposure (Ne88, Sc81, Sc84). They did find, however, that the observed effects are in the direction of genetic damage from the bomb radiation exposure.

The incidence of serious genetic disease due to mutations and chromosome aberrations induced by radiation is referred to as genetic detriment. Serious genetic disease includes inherited ill health, handicaps, or disabilities. Genetic disease may be manifest at birth or may not become evident until some time in adulthood. Radiation-induced genetic detriment includes impairment of life, shortened life span, and increased hospitalization. Estimates of the frequency of radiation-induced genetic impairment are presented in Chapter 6 of this document. Although the numbers represent rough approximations, they are relatively small in comparison with the magnitude of detriment associated with spontaneously arising genetic diseases (UNSCEAR82).

3.3 EVIDENCE THAT RADIATION IS TERATOGENIC

Teratogenicity is the malformation of tissues or organs of a fetus resulting from physiologic and biochemical changes. Radiation is a well-known teratogenic agent. Case reports of radiation-induced teratology were made as early as 1921 (St21). By 1929, an extensive review of a series of pregnancies yielded data indicating that 18 of the children born to 76 irradiated mothers had abnormally small heads (microcephaly) (Mu30). Although the radiation dose in these cases is not known, it was high.

Early experimental studies (primarily in the 1940's and 1950's) demonstrated the teratogenic properties of x-rays in fish, amphibia, chick, mouse, and rat embryos (Ru53). These experiments showed that the developing fetus is much more sensitive to radiation than the mother and provided data on periods of special sensitivity and dose-response. The malformations produced in the embryo depend on which cells, tissues, or organs in the fetus are most actively differentiating at the time of radiation. Embryos are relatively resistant to radiation-induced teratogenic effects during the earliest stages of their development and are most sensitive during development of the neuroblast (these cells eventually become the nerve cells). These experiments showed that different malformations could be elicited by irradiating the fetus at specific times during its development.

Substantial evidence points to the ability of radiation to induce teratogenic effects in human embryos as well. In a study of mental retardation in children exposed in utero to atomic bomb radiation in Hiroshima and Nagasaki, researchers found that damage to the child appears to be related linearly to the radiation dose that the fetus receives (Ot84, Du88). The greatest risk of damage occurs at 8 to 15 weeks, which is the time the nervous system is undergoing the most rapid differentiation and proliferation of cells. They concluded that the age of the fetus at the time of exposure is the most important factor in deter- mining the extent and type of damage from radiation. A numerical estimate of mental retardation risk due to radiation is given in Chapter 6.

3.4 UNCERTAINTIES

Although much is known about radiation dose-effect relationships at high-level doses, uncertainty exists when dose-effect relationships based on direct observations are extrapolated to lower doses, particularly when the dose rates are low. As described in Chapter 6, the range of extrapolation varies depending on the sensitivity of the organ system. For breast cancer, this may be as small as a factor of four. Uncertainties in the dose-effect relationships are recognized to relate to such factors as differences in quality and type of radiation, total dose, dose distribution, dose rate, and

radiosensitivity (including repair mechanisms, sex, variations in age, organ, and state of health). The range of uncertainty in the estimates of radiation risk is examined in some detail in Chapters 5, 6 and 7.

The uncertainties in the details of the mechanisms of carcinogenesis, mutagenesis, and teratogenesis make it necessary to rely on the considered judgments of experts on the biological effects of ionizing radiation. These findings, which are well documented in publications by the National Academy of Sciences and the United Nations Scientific Committee on the Effects of Atomic Radiation, are used by advisory bodies such as the International Commission on Radiological Protection (ICRP) in developing their recommendations. The EPA has considered all such findings in formulating its estimate of the relationship between radiation dose and response.

Estimates of the risk from ionizing radiation are often limited to fatal cancers and genetic effects. Quantitative data on the incidence of nonfatal radiogenic cancers are sparse, and the current practice is to assume that the total cancer incidence resulting from whole-body exposure is 1.5 to 2.0 times the mortality. In 1980, the NAS-BEIR Committee estimated the effects of ionizing radiation directly from epidemiology studies on the basis of both cancer incidence and the number of fatal cancers induced per unit dose (NAS80). The lifetime risk from chronic exposure can be estimated from these data, either on the basis of (1) relative risk (i.e., the percentage of increase in fatal cancer), or (2) absolute risk (i.e., the number of excess cancers per year at risk following exposure). The latter method results in numerically smaller estimated risks for common cancers, but a larger estimated risk for rare cancers.

3.5 SUMMARY OF EVIDENCE THAT RADIATION IS A CARCINOGEN, MUTAGEN, AND TERATOGEN

Radiation has been shown to be a carcinogen, a mutagen, and a teratogen. At sufficiently high doses, radiation acts as a complete carcinogen, serving as both initiator and promoter. With proper choice of radiation dose and exposure schedule, cancers can be induced in nearly any tissue or organ in both humans and animals. At lower doses, radiation produces a delayed response in the form of increased incidence of cancer long after the exposure period. This has been documented extensively in both humans and animals. Human data are extensive and include atomic bomb survivors, many types of radiation-treated patients, underground miners, and radium dial workers. Animal data include demonstrations in many mammalian species and in mammalian tissue cultures.

Evidence of mutagenic properties of radiation comes mostly from animal data, in which all forms of radiation-induced mutations have been demonstrated, mostly in mice. Tissue cultures of human lymphocytes have also shown radiation-induced

mutations. Limited evidence that humans are not more sensitive comes from studies of the A-bomb survivors in Japan.

Evidence that radiation is a teratogen has been demonstrated in animals and in humans. A fetus is most sensitive to radiation during the early stages of organ development (between 8 and 15 weeks for the human fetus). The radiation-induced malformations produced depend on which cells are most actively differentiating.

In conclusion, evidence of the mutagenic and teratogenic properties of radiation in man is strong, and for carcinogenesis, the evidence is overwhelming and well quantified at moderate doses.

3.6 REFERENCES

Aw78 Awa, A. A., et al., Relationship Between Dose and Chromosome Aberrations in Atomic Bomb Survivors, Hiroshima and Nagasaki, RERF TR 12-77, Radiation Effects Research Foundation, Japan, 1978.

Be77 Beebe, G.W., Kato, H., and Land, C.E., Mortality Experience of Atomic Bomb Survivors, 1950-1974, Life Span Study Report 8, RERF TR 1-77, Radiation Effects Research Foundation, Japan, 1977.

Bo84 Borek, C., et al., "Inhibition of X-ray and Ultraviolet Light-Induced Transformation in Vitro by Modifiers Poly (ADP-ribose) Synthesis," Radiation Research 99:219-227, 1984.

Br77 Brandom, W.F., et al., "Somatic Cell Chromosome Changes in Humans Exposed to 2j9Plutonium and 222Radon," Contract No. E(29-2)-3639, Progress Report, July 1, 1976, through September 30, 1977, Department of Energy, Washington, D.C., 1977.

Ca80 Carter, C.O., "Some Rough Estimates of the Load From Spontaneously Arising Genetic Disorders," paper submitted to the U.N. Scientific Committee on the Effects of Atomic Radiation, September 1980.

Du88 Dunn, K., H. Yoshimaru, M. Otake, J.F. Annegers, and W.J. Schull, Prenatal Exposure to Ionizing Radiation and Subsequent Development of Seizures, Technical Report RERF TR 13-88, Radiation Effects Research Foundation, Hiroshima, 1988.

Gu84 Guerrero, I., Villasante, A., Corces, V., and Pellicer A., "Activation of a c-K-ras Oncogene by Somatic Mutation in Mouse Lymphomas Induced by Gamma Radiation," Science 225, 1159-1162, September 14, 1984.

Ha84 Han, A., Hill, C.K., and Elkind, M.M., "Repair Processes and Radiation Quality in Neoplastic Transformation of Mammalian Cells," Radiation Research 99, 249-261, 1984.

Ho25 Hoffman, F.L., "Radium (Mesothorium) Necrosis," J.A.M.A. 85, 961-965, 1925.

In79 International Meeting on the Toxicity of Thorotrast and Other Alpha-Emitting Heavy Elements, Lisbon, June 1977, Environmental Research 18, 1-255, 1979.

Ka82 Kato, H., and Schull, W.J., "Studies of the Mortality of A-Bomb Survivors," Report 7 Part 1, "Cancer Mortality Among Atomic Bomb Survivors, 1950-78," Radiation Research 90, 395-432, 1982.

Ke84 Kennedy, A.R., and Little, J.B., "Evidence That a Second Event in X-ray Induced Oncogenic Transformation in Vitro Occurs During Cellular Proliferation," Radiation Research 99, 228-248, 1984.

Ki62 King, R.C., Genetics, Oxford University Press, New York, 1962.

Lu24 Ludewig, P., and Lorenser, E., "Untersuchung der Grubenluft in den Schneeberger Gruben auf den Gebalt an Radiumemanation," Zschr. f. Phys. 22, 178-185, 1924.

Ma10 Marie, P., Clunet, J., and Raulot-Lapointe, G., "Contribution a L'etude du Developpement des Tumeurs Malignes sur les Ulceres de Roentgen," Bull. Assoc. Franc. Etude Cancer, 3, 404, 1910, cited in UNSCEAR77.

Ma12 Marie, P., Clunet, J., and Raulot-Lapointe, G., "Nouveau cas de Tumeur Maligne Provoquee par une Radiodermite Experimentale Chez let Rat Blanc," Bull. Assoc. Franc. Etude Cancer 5, 125, 1912, cited in UNSCEAR77.

Ma29 Martland, H.S., and Humphries, E.E., "Osteogenic Sarcoma in Dial Painters Using Luminous Paint," Arch. Pathol. 7, 406-417, 1929.

Mo67 Morgan, K.Z., and Turner, J.E., Principles of Radiation Protection, John Wiley and Sons, Inc., New York, 1967.

Mu30 Murphy, D.P., and DeRenyi, M., "Post-Conception Pelvic Irradiation of the Albino Rat (Mus norvegicus): Its Effect on the Offspring," Surgery, Gynecology and Obstetrics 50, 861-863, 1930.

NAS72 National Academy of Sciences - National Research Council, The Effects on Populations of Exposures to Low Levels of Ionizing Radiation, Report of the Committee on the Biological Effects of Ionizing Radiations (BEIR Report), Washington, D.C., 1972.

NAS80 National Academy of Sciences - National Research Council, The Effects on Populations of Exposures to Low Levels of Ionizing Radiation, Committee on the Biological Effects of Ionizing Radiation, Washington, D.C., 1980.

NAS88 National Academy of Sciences - National Research Council, Health Risks of Radon and Other Internally Deposited Alpha-Emitters, BEIR IV, National Academy Press, Washington, D.C., 1988.

Ne88 Neel, J.V., Schull, W.J., Awa, A.A., Satoh, C., Otake, M., Kato, H., and Yoshimato, Y., Implications of the Hiroshima - Nagasaki Genetic Studies for the Estimation of the Human "Doubling Dose" of Radiation, Presentation at XVI the International Congress of Genetics, Toronto, 1988.

Ot84 Otake, M., and Schull W., Mental Retardation in Children Exposed in Utero to the Atomic Bombs: A Reassessment, Technical Report RERF TR 1-83, Radiation Effects Research Foundation, Japan, April 1984.

Po77 Pohl-Ruling, J., Fischer, P., and Pohl, E., "Einfluss Erhohter Umweltradio-Aktivitat and Beruflicher Strahlen-Belastung auf die Chromosomen-Aberrationen in den Lymphocyten des Peripheren Blutes," Tagungsaber, Osterr.-Ungar, Tagung uber biomedizin, Forschung, Seibersdorf, September 1977.

Po78 Pohl-Ruling, J., Fischer, P., and Pohl, E., "The Low-Level Shape of Dose Response for Chromosome Aberrations," IAEA-SM-224/403, presented at Internatinal Symposium on the Latent Biological Effects of Ionizing Radiation, IAEA, Vienna, 1978.

Ru53 Rugh, R., "Vertebrate Radiobiology: Embryology," Ann. Rev. Nucl. Sci. 3, 271-302, 1953.

Sc81 Schull, W.J., Otake, M., and Neel, J.V., "Genetic Effects of the Atomic Bombs: A Reappraisal," Science 213, 1220-1227, September 1981.

Sc84 Schull, W.J. and J.K. Bailey, "Critical Assessment of Genetic Effects of Ionizing Radiation on Pre- and Postnatal Development," pp. 325-398, in: Issues and Reviews in Teratology, Volume 2, H. Kalter, editor. Plenum Press, New York, 1984.

St21 Stettner, E., "Ein Weiterer Fall einer Schadingung einer Menschichen Frucht durch Roentgen Bestrahlung, Jb. Kinderheitk," Phys. Erzieh. 95, 43-51, 1921.

St75 Storer, J.B., "Radiation Carcinogenesis," Cancer 1, pp. 453-483. F.F. Becker, editor, Plenum Press, New York, 1975.

Tr77 Trimble, B.K., and Smith, M.E., "The Incidence of Genetic Disease and the Impact on Man of an Altered Mutation Rate," Canadian Journal of Genetic Cytology, 19, 375-385, 1977.

Tu63 Tuscany, R., and Klener, V., "Pokles Euploidie v Bunkach Kostni Drene osob s Vnitrni Kontaminaci Nekterymi Radioisotopy," Cisk. Fysiol. 12, 391, 1963.

Uh21 Uhlig, M., "Uber den Schneeberger Lungenkrebs, Virchows," Arch. Pathol. Anat. 230, 76-98, 1921.

UNSCEAR58 United Nations Scientific Committee Report on the Effects of Atomic Radiation, Official Records: Thirteenth Session, Supplement No. 17(A/3838), United Nations, New York, 1958.

UNSCEAR77 United Nations Scientific Committee on the Effects of Atomic Radiation, Sources and Effects of Ionizing Radiation, United Nations, New York, 1977.

UNSCEAR82 United Nations Scientific Committee on the Effects of Atomic Radiation, Ionizing Radiation: Sources and Biological Effects, United Nations, New York, 1982.

UNSCEAR88 United Nations Scientific Committee on the Effects of Atomic Radiation, Sources, Effects and Risks of Ionization Radiation, 1988 Report to the General Assembly, Sales No. #. 88. IX. 7, United National, New York, 1988.

Up75 Upton, A.C., "Physical Carcinogenesis: Radiation--History and Sources," Cancer 1, 387-403, F.F. Becker, editor, Plenum Press, New York, 1975.

Vo02 Von Frieben, A., "Demonstration Linas Cancroids des Rechten Handruckens, das sich nach Langdauernder Einwirkung von Rontgen-strahlen Entwickelt Hatte," Fortschr. Geb. Rontgenstr. 6, 106, 1902, cited in Up75.

Wa83 Wakabayashi, T., et al., "Studies of the Mortality of A-Bomb Survivors, Report 7, Part III, Incidence of Cancer in 1959-1978, based on the Tumor Registry, Nagasaki," Radiat. Res. 93, 112-146, 1983.

000048

4. MOVEMENT OF RADIONUCLIDES THROUGH ENVIRONMENTAL PATHWAYS

4.1 INTRODUCTION

When radionuclides are released to the air, they can enter a number of pathways leading to human exposure. These environmental pathways are shown in Figure 4-1.

Radionuclides, released in the form of particulates or gases, form a plume that disperses down wind (Section 4.2). These radionuclides in the air can directly affect people in two ways: through external dose caused by photon exposure from the plume, or through internal dose resulting from radionuclide inhalation. As the airborne radionuclides move from the point of release, they (especially those in particulate form) deposit on ground surfaces and vegetation as a result of dry deposition and precipitation scavenging (Section 4.3). Photon radiation from the radionuclides deposited on the ground contributes to the external doses. Finally, small fractions of the radionuclides deposited on plant surfaces and agricultural land enter the food chains, concentrating in produce and in animal products such as milk and meat (Section 4.4). Consumption of contaminated foodstuff then contributes to the internal doses of radiation to individuals.

The concentrations of radionuclides in air, on soil surfaces, and in food products are calculated using the computer code AIRDOS-EPA. A description of the code and some examples of its applications, with an overview of the uncertainties, are provided in Section 4.5. (See references Ha82, Ti83, and NCRP84 for a more detailed description of the processes, modeling techniques, and uncertainty estimates.)

4.2 DISPERSION OF RADIONUCLIDES THROUGH THE AIR

4.2.1 Introduction

Radionuclides entering the atmosphere are transported away from their point of release and are diluted by atmospheric processes. To perform a radiological assessment, it is necessary to model the long-term average dispersion resulting from these processes. This is because the sources under consideration release radionuclides at rates that are substantially uniform when considered over long periods of time, and because the somatic and genetic effects on human health are generally treated as being the result of chronic exposure over long periods of time.

As large-scale winds move over the earth's surface, a turbulent boundary layer, or mixed layer, is created that controls the dispersion of the released radionuclides. The depth and dispersion properties of the mixed layer, which are highly variable over short periods of time, are controlled by two

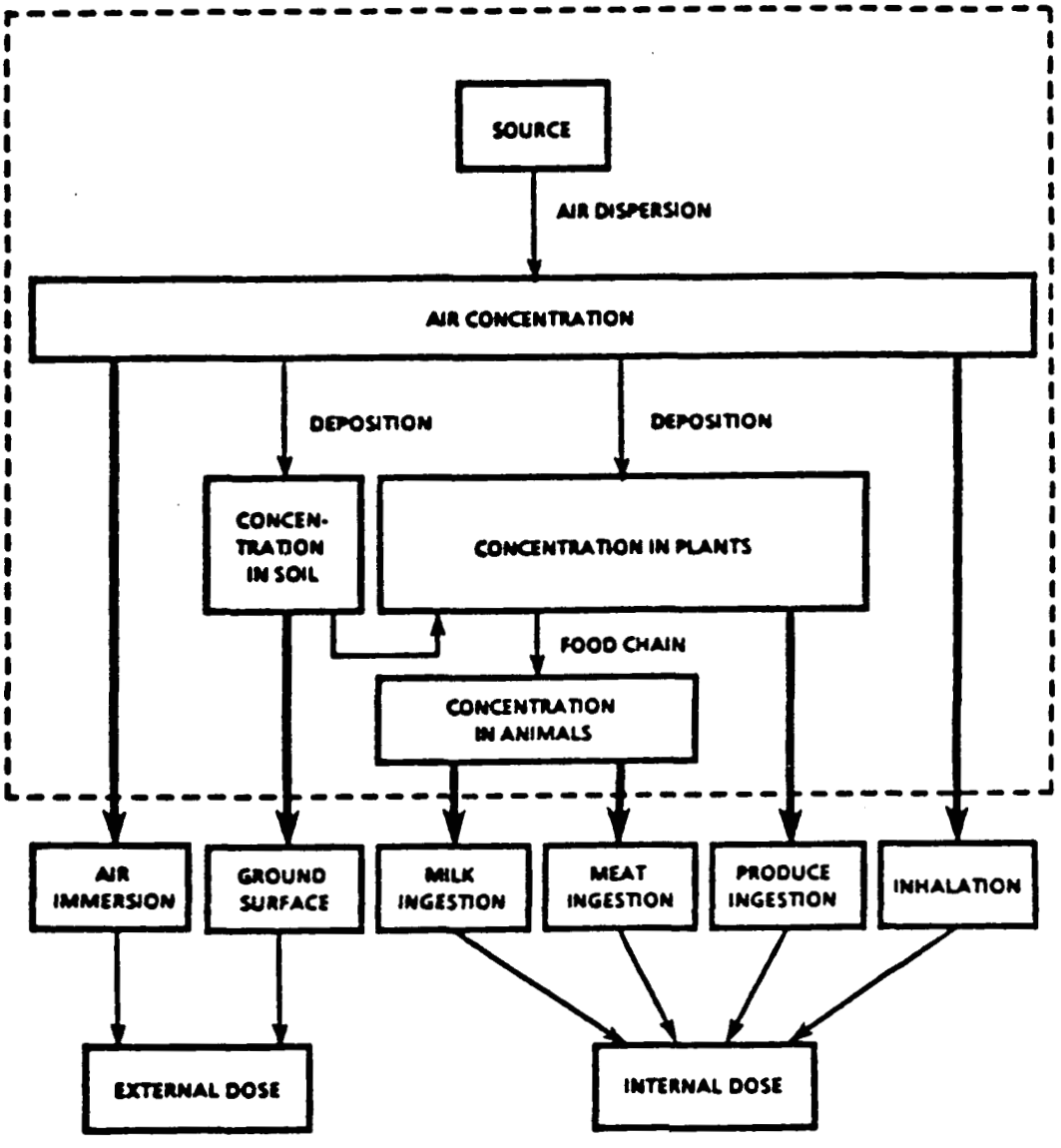

Figure 4-1. Pathways of airborne radionuclides into the environment.

000050

sources of turbulent effects: mechanical drag of the ground surface and heat transfer into or from the boundary layer. The mechanical drag of the ground surface on the atmosphere creates a shear zone that can produce significant mechanical mixing. The mechanical mixing is stronger when the wind is stronger and the roughness elements (water, grains of dirt, grass, crops, shrubs and trees, buildings, etc.) are larger. The vertical scale (dimension or thickness) of the mechanical mixing zone is related to the size of these roughness elements. Heat transfer into or from the boundary layer, the second source of turbulent effects, also strongly affects the mixed layer's turbulent structure and thickness. Solar heating creates huge rising bubbles or thermals near the ground. These large bubbles produce turbulent eddies of a much larger scale than those from the mechanical drag of the ground surface. With strong solar heating on a clear day, the mixing layer may be a few thousand meters deep. On a clear, calm night, the boundary layer virtually disappears, so that radionuclides (and other pollutants) are dispersed with very little turbulent diffusion.

The objective of the atmospheric transport models used by EPA is to incorporate the essential physical data necessary to characterize an extremely complex turbulent flow process into a simplified model that is adequate to predict the long-term dispersion of radionuclide releases. In general, the data necessary to implement a detailed theoretical model of atmospheric dispersion are not available and would be impractical to obtain. Apart from the data problem, the mathematical complexities and difficulties of a direct solution to the turbulent dispersion problem are profound and beyond the practical scope of routine EPA regulatory assessments. The widely accepted alternative has been to incorporate experimental observations into a semi-empirical model, such as outlined below, that is practicable to implement.

Three basic meteorological quantities govern dispersion: wind direction, wind speed, and stability. Wind direction determines which way a plume will be carried by the wind: a wind from the northwest moves the plume toward the southeast. Although wind direction is a continuous variable, wind directions are commonly divided into 16 sectors, each centered on one of the cardinal compass directions (e.g., north, north-northeast, northeast, etc.). Since there are 16 sectors, each one covers a 22-1/2-degree angle. Wind speed directly influences the dilution of radionuclides in the atmosphere. If other properties are equal, concentration is inversely proportional to wind speed. Customary wind speed categories include 0 to 3 knots (lowest speed) to greater than 21 knots (highest speed).

Atmospheric stability, the third meteorological quantity, categorizes the behavior of a parcel of air when it is adiabatically (without heat transfer) displaced in a vertical direction. If the displaced parcel would be expected to return toward its original position, the category is stable; if it would

continue to move away from its original position, the category is unstable. Under conditions of neutral stability, the parcel would be expected to remain at its new elevation without moving toward or away from its old one.

Typically, the unstable classes are associated with conditions of very little cloud cover, low wind speeds, and a sun high in the sky. The atmosphere is neutral on a windy, cloudy day or night and is stable at the surface at night when the sky is clear and wind speeds are low. Dilution due to vertical mixing occurs more rapidly with increasing distance under unstable conditions than under stable ones. Stability categories range from A (very unstable) to D (neutral) to G (very stable).

A table of joint frequencies (fractions of time) for each combination of stability, wind direction, and wind speed is the starting point for any assessment of long-term atmospheric dispersion. These data are usually obtained by the analysis of long-term observations from weather stations or from site-specific meteorological facilities.

4.2.2 Air Dispersion Models

EPA uses an empirical Gaussian model for most radionuclide dispersion calculations. The model also considers such processes as plume rise, depletion due to deposition, and radionuclide ingrowth and decay.

Gaussian Plume Model

The basic workhorse of EPA dispersion calculations is the Gaussian model. Several reasons why the Gaussian model is one of the most commonly used are quoted below (Ha82):

"(1) It produces results that agree with experimental data as well as any model.

(2) It is fairly easy to perform mathematical operations on this equation.

(3) It is appealing conceptually.

(4) It is consistent with the random nature of turbulence.

(5) It is a solution to the Fickian diffusion equation for constants K and u.

(6) Other so-called theoretical formulas contain large amounts of empiricism in their final stages.

(7) As a result of the above, it has found its way into most government guidebooks, thus acquiring a 'blessed' (sic) status."

The long-term Gaussian plume model gets its name from the shape presumed for the vertical concentration distribution. For a ground level source, the concentration is maximum at ground level and decreases with elevation like half of a normal or Gaussian distribution. For an elevated release, the concentration is symmetrically distributed about the effective height of the plume, characteristic of a full Gaussian distribution. Actually, the vertical dispersion is limited by the ground surface below and any inversion lid above the release (see Figure 4-2). An inversion lid is defined by the altitude in the atmosphere where the potential temperature begins to increase with increasing height, thus limiting the volume of air available for diluting releases.

At large distances from the point of the release, the radionuclide concentration becomes uniformly distributed between the ground and the lid. Within each of the 16 direction sectors, the concentration is considered to be uniform at any given distance from the release. For a ground-level release, the ground-level concentration decreases monotonically with distance from the release point. For an elevated release, the ground-level concentration increases, reaches a maximum value, and then decreases with increasing distance from the release point.

Mathematically, the long-term average dispersion calculation used by EPA can be expressed as

$$\chi/Q = \frac{2.03 \exp[-0.5(h_e/\sigma_z)^2]}{\mu \times \sigma_z} \qquad (4\text{-}1)$$

where χ/Q (s/m^3) is the concentration for a unit release rate at a distance x(m) from the release point, h_e(m) is the effective height of the release, σ_z(m) is the vertical dispersion parameter appropriate to the stability category and distance x, and μ(m/s) is the wind speed. At distances where the release is uniformly mixed between the ground and lid, the expression becomes

$$\chi/Q = \frac{2.55}{\mu \times h_\ell} \qquad (4\text{-}2)$$

where h_ℓ(m) is the lid height (meters), and the other quantities are the same as before.

Plume Rise Model

Vertical momentum or buoyancy can cause a plume to rise to an effective height that is several times the physical height of

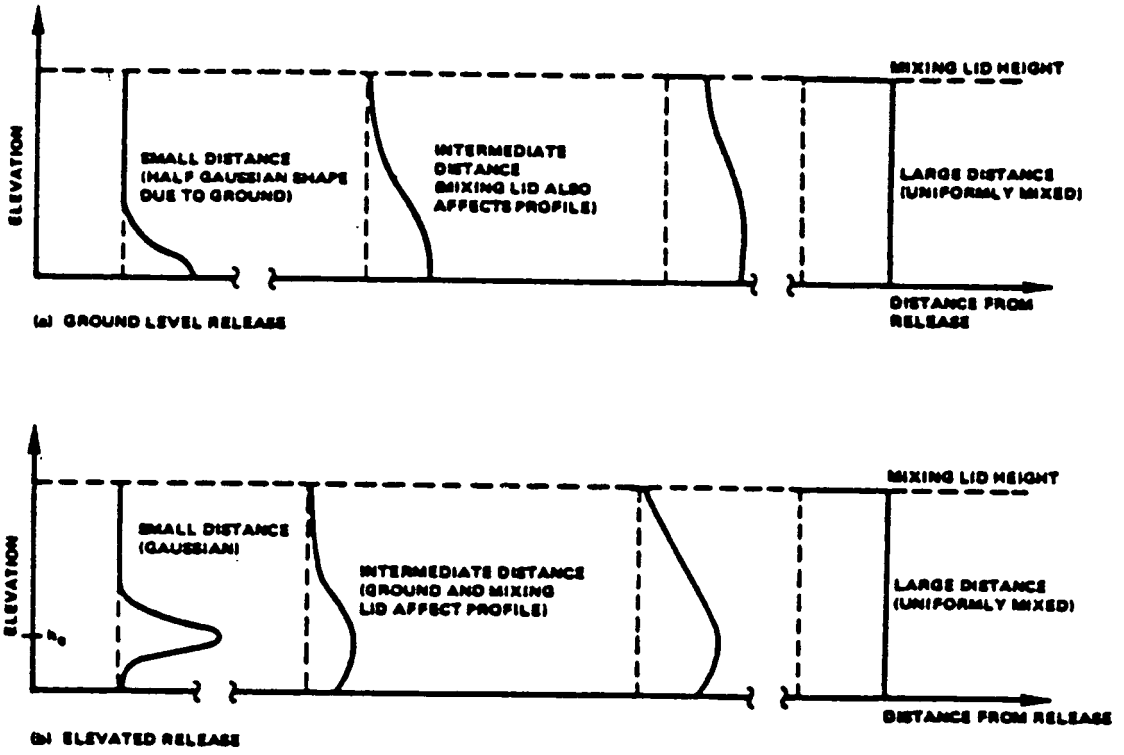

Figure 4-2.- Vertical concentration profiles for plume vs downwind distance from release

the release. The momentum flux of a release is proportional tothe product of the volume flow rate and the vertical exit velocity, while the buoyancy flux is proportional to the product of the volume flow rate and the difference between the temperatures of the release gases and the ambient air. Momentum rise is initially dominant for most plumes, even though buoyant rise may become the more important process at larger distances. In any case, plume rise increases with distance from the release point; the effective height of the plume may not reach a limiting value until the plume is several kilometers from the point of release.

Plume Depletion Model

As radionuclides in the plume are dispersed, their activity is depleted by dry deposition and precipitation scavenging. The rate of plume depletion due to dry deposition and precipitation scavenging is proportional to the deposition rate (see Section 4.3). EPA's Office of Radiation Programs uses a source depletion model which considers the shape of the vertical concentration profile to be unchanged by depletion. Depletion due to deposition generally does not cause more than half of the released activity to be removed at a distance of 80 km. Depletion by precipitation scavenging occurs only during periods of precipitation.

Radiological Decay and Ingrowth

Radiological decay can also reduce the radionuclide concentration in the plume. A typical elapsed time for traverse between the point of release and a receptor located 80 km away is about 5 hours. Thus, only nuclides with short half-lives would be appreciably depleted by radiological decay. For example, argon-41, which has a 1.8 hour half-life, decays to about 15 percent of its original activity in 5 hours. When a released radionuclide is a parent for other radionuclides in a chain, those decay products will become part of the plume's activity even though they were not released by the source. For example, cesium-137 is the parent of barium-137m, which has a half-life of about 2.6 minutes. The barium-137m activity would reach 90 percent of that of the cesium-137 in about 8.5 minutes, the time required at a typical wind speed of 5 m/s for the release to travel about 2.5 km. For many nuclides, the radiological effects associated with exposure to decay products are at least as important as those from exposure to the parent. For example, the external photon dose from a release of cesium-137 is entirely due to photons from its decay product barium-137m.

4.2.3 Uncertainties in Atmospheric Dispersion Modeling

EPA must deal with several uncertainties in its modeling of atmospheric dispersion. Two basic considerations contribute to these uncertainties. The first involves the parameters that enter into the model and how well they are known or can be

determined for a particular situation. The presumption is that the basic assumptions for which the model was developed are satisfied and that the uncertainty of predicted concentrations depends primarily on the uncertainty of the data used in the calculations. The second consideration involves the use of a modeling technique under conditions that do not satisfy the basic assumptions for which the model was developed. Such use may be the only practicable alternative available for assessing atmospheric dispersion, but the principal uncertainties are now related to evaluating the significance of these effects that are not considered in the model. An example of this would be the use of the Gaussian plume model, which was developed for short distances over an open, flat terrain, to assess dispersion over large distances or in a complex terrain dominated by hills and valleys.

In regard to the first consideration, the authors of NCRP84 concluded that the appropriate basic parameters, such as wind speed and direction, can be determined accurately enough so that they are not major contributors to model uncertainty. However, the uncertainties associated with derived parameters (such as stability class) or lumped parameters (such as those used to characterize deposition, resuspension, or building wake effects) can dominate the model uncertainties.

The effect of the uncertainty of an input variable can strongly or weakly influence the model output depending upon circumstances. For example, the effective height of a release, h_e, can be estimated using a plume rise model to within a factor of about 1.4 (NCRP84). From equations 4-1 and 4-2, it is clear that when σ_z is much smaller than h_e the effect of this uncertainty on equation 4-1 is strong; whereas at large distances where equation 4-2 is appropriate, the value of h_e has little effect on the calculated concentration.

Little and Miller (Li79 and Mi82) have surveyed a number of validation studies of atmospheric dispersion models. Although these studies provide limited data, they indicate an uncertainty of approximately a factor of 2 for annual average concentrations for locations within 10 km of the release and approximately a factor of 4 (77 percent of their samples) to 10 (92 percent of their samples) for locations between 30 and 140 km of the release. The validation studies were for fairly complex terrain, i.e., substantial hills and valleys, but not extreme conditions of either terrain or meteorology.

4.3 DEPOSITION OF ATMOSPHERIC RADIONUCLIDES

4.3.1 Introduction

Atmospheric deposition includes a complex set of processes that result in the transfer of radionuclides from the plume to the ground surface and vegetation. Processes are categorized as

000056

"dry" when they result in the direct transfer from the plume to the surfaces in contact with it and "wet" when the transfer is first from the plume to precipitation and then from the precipitation to the ground or vegetation surfaces.

4.3.2 Dry Deposition Model

Dry deposition models generally relate the surface deposition flux to the air concentration at some reference height, typically 1 meter above the ground. The resulting equation is

$$W = v_d \chi_o \tag{4-3}$$

where W is the deposition flux to the surface (Ci/m^2s), χ_o is the reference height air concentration (Ci/m^3), and v_d is the deposition velocity (m/s). Although v_d has the units of a velocity (hence its name), it is a lumped variable relating the deposition flux to the air concentration. The value of the deposition velocity depends on a complex interaction of effects--atmospheric, aerosol, and surface (canopy). Thus, while the deposition velocity is often assigned a simple fixed value, it actually represents the result of a diverse combination of effects.

4.3.3 Wet Deposition Model

Wet deposition models relate the flux due to precipitation scavenging to the concentration in the plume. Since the activity scavenged from the plume by an element of precipitation is presumed to remain with the precipitation element until reaching the ground surface, the deposition flux is proportional to the total wetted activity in a vertical segment of the plume (Ci/m^2). The resulting equation can be expressed as

$$W = \lambda_{sc} \bar{\chi} L \tag{4-4}$$

where W is the surface flux (Ci/m^2s), $\bar{\chi}$ is the average wetted air concentration (Ci/m^3), L is the depth of the wetted layer (m), and λ_{sc} is the scavenging rate (s^{-1}). λ_{sc} is a variable that lumps together the complex interactions between precipitation and the plume. Because the deposition flux is proportional to the vertically integrated concentration (i.e., the total activity in a column of unit ground surface area), it is independent of the effective height of the release. Raising the effective height of a release may lower the dry deposition flux but leaves the flux resulting from precipitation scavenging unchanged.

4.3.4 Soil Concentration Model

The deposited radionuclides accumulate in the surface soil until they are removed either by radiological decay or by processes such as leaching. The areal concentration can be expressed as

$$C_a = \frac{W \; [1-\exp(-\lambda_B \; t_b)]}{\lambda_B} \qquad (4\text{-}5)$$

where C_a is the areal concentration (Ci/m^2), W is the radionuclide flux to the ground surface (Ci/m^2s), t_b (s) is the time for radionuclide buildup in soils, and λ_B is the effective removal rate from soil (s^{-1}). When the deposited radionuclide is the parent of other radionuclides, their soil concentrations at time t_b due to ingrowth from the parent must also be calculated. For calculating root transfer to crops, the radionuclide concentration in the surface soil layer can be expressed as

$$C_s = C_a/P \qquad (4\text{-}6)$$

where C_s is the soil concentration (Ci/kg) and P is the areal density of dry soil (kg/m^2) for the plowed or mixed soil layer.

The value of t_b, the deposition accumulation time, is typically in the range of 20 to 100 years. For nearby individual assessments, t_b is chosen to correspond to the expected operational life of the facility. If EPA considers it likely that the facility would be replaced by another similar one at that time, then t_b is increased accordingly up to a maximum value of 100 years. Of course, only those environmental concentrations that depend on soil deposition are affected by the choice of t_b. For collective (population) assessments, a value of 100 years is used for t_b. This value corresponds to establishing a 100-year cutoff for the time following a release when any significant intake or external exposure associated with deposition on soil might take place. Since radionuclide inhalation is generally the dominant risk pathway, total risk is not sensitive to the choice of t_b.

The value of λ_B is the sum of the radiological decay constant, λ, and an environmental removal rate for deposited radionuclides from soil, λ_s. Hoffman and Baes (Ho79) considered a simplified leaching-loss model appropriate to agricultural soil for calculating λ_s. Their range of values for the parameter K_D (the equilibrium distribution coefficient relating the ratio of the radionuclide concentration in soil water to that on soil particles) for cesium is from 36.5 to 30,000 ml/g. The

corresponding ratio of λ_s is 820:1. The uncertainty in λ_s is also significantly affected by the uncertainty in the other parameters. Although their model is a reasonable one, adequate studies for its validation do not exist. Since the choice of appropriate values for λ_s is so uncertain, EPA has used 0.2 y^{-1} as a general nominal value (the geometric mean of λ_s for Pu^+, I^-, Cs^+, and Sr^{2+} ions is 1.2×10^{-2} y^{-1} using Hoffman and Baes median data values) and a value of 0.1 y^{-1} for urban settings where strong surface runoff would be expected to increase the effective removal rate.

4.3.5 Uncertainties

Uncertainties in v_d and λ_{sc} are substantial; NCRP84 lists measured values of v_d which vary over three orders of magnitude. Hanna et al. note that "The use of scavenging coefficient for wet removal modeling is probably best regarded as an order of magnitude estimation procedure" (Ha82). Actually, much of the wide range of values reflects measurement uncertainties as well as actual variations. Furthermore, most field deposition measurements reflect short-term or episodic studies rather than long-term observations. Miller and Little (Mi82) concluded that the data necessary to quantify the accuracy of calculated ground concentrations are not currently available.

4.4 TRANSPORT THROUGH THE FOOD CHAIN

4.4.1 Introduction

Deposited radionuclides may become associated with vegetation by two principal routes: (1) direct interception of a fraction of the deposited activity by plant surfaces, and (2) transfer of deposited activity from the soil through the plant's root system. Radionuclides in animal feed crops such as pasture grass or stored feeds can be transferred to foods such as milk and meat.

4.4.2 Concentration in Vegetation

The radionuclide concentrations in plants due to interception of the deposition flux can be calculated as (Ba76)

$$C_v^d = \frac{W\,[\,f_r\,T_v\,(1-\exp(-\lambda_E\,t_e)\,]}{Y_v\,\lambda_E} \qquad (4\text{-}7)$$

where C_v^d is the crop concentration (Ci/kg) at harvest, W is the deposition flux (Ci/m^{2}s), f_r is the fraction of the deposition flux which the vegetation intercepts, Y_v is the vegetation yield

(kg/m^2), T_v is a translocation factor, λ_E is the effective removal rate of the intercepted radionuclide from the vegetation (s^{-1}), and t_e is the exposure time of the vegetation to the radionuclide flux (s). Miller (Mi79) has observed that data for f_r and Y_v are well represented by the expression

$$f_r = 1 - \exp(-\gamma Y_v) \tag{4-8}$$

where γ was found to range between 2.3 and 3.3 m^2/kg when Y_v is expressed in kg/m^2, dry. Since the product γY_v is generally less than 1.0, for many practical purposes equation 4-8 can be approximated as

$$f_r = \gamma\ Y_v \tag{4-9}$$

In this case, the quantity f_r/Y_v (4-7) can be replaced by γ which shows much less environmental variation than f_r and Y_v do separately. Note that Y_v is the total vegetative yield which can be several times the edible portion yield for a crop. T_v, the translocation factor, relates the radionuclide concentration in the edible portion to that in the entire plant. Baker et al. (Ba76) suggest a value of 1.0 for leafy vegetables and fresh forage, and 0.1 for all other produce. (A value of 1.0 is used for all crops in AIRDOS-EPA.)

The value for λ_E is the sum of λ , the radionuclide decay constant and λ_w, the weathering rate factor. For a typical weathering half-life of 14 days, λ_w has a value of $5.7 \times 10^{-7}\ s^{-1}$. In general, the product λ_E te >1 and equation 4-9 can be simplified to

$$C_v^d = \frac{W\ (f_r\ T_v)}{Y_v\ \lambda_E} \tag{4-10}$$

Radionuclides also transfer directly from the soil to vegetation through the plant's root system. The plant concentration due to this process can be calculated as

$$C_v^s = C_s\ B_{iv} \tag{4-11}$$

where C_v^s is the plant concentration at harvest (Ci/kg), C_s is the soil concentration (Ci/kg), and B_{iv} is the element-specific soil to plant transfer factor. The total concentration from both processes is

$$C_v = C_v^s + C_v^d \qquad (4\text{-}12)$$

Generally, the contribution of C_v^d to C_v is greater than that of C_v^s for atmospherically dispersed radionuclides.

4.4.3 Concentration in Meat and Milk

For a concentration C_v (Ci/kg) in animal feed, the concentration in meat C_f (Ci/kg) can be calculated as

$$C_f = Q_f \; F_f \; C_v \qquad (4\text{-}13)$$

where Q_f is the animal's feed consumption (kg/d) and F_f is the feed to meat transfer factor (d/kg). F_f is element dependent and represents the average mean concentration at slaughter for a unit ingestion rate over the animal's lifetime. Most systematic studies of F_f have been made for cattle or other ruminants, although a few measurements for other species also exist (NCRP84). In practice, even the F_f values for beef are often based on collateral data (Ba84).

Similarly for milk, the concentration C_m (Ci/L) can be calculated as

$$C_m = Q_f \; F_m \; C_v \qquad (4\text{-}14)$$

where F_m (d/L) is the equilibrium transfer factor to milk and the other parameters are as for equation 4-13. Although more statistical data are available for F_m than for F_f, the estimation of transfer coefficients to animal products is a subject needing both integration and better documentation (NCRP84).

4.4.4 Summary

Radionuclide intake through the food chain depends upon both the concentration in food and human usage. The concentration in food depends upon the food source use of foods grown in proximity to the release location, the fraction of an individual's food that is home produced and other factors that can strongly influence the significance of the food pathway. Unfortunately, generally useful validation studies to quantify the substantial uncertainties in the food chain have not been made. References such as NCRP84, Ti83, Mi82, and Li79 cite ranges for some

parameters and make limited model uncertainty estimates but do not make quantitative evaluations of the uncertainties for the ingestion pathway taken as a whole.

EPA has chosen a factor of 10 as a reasonable upper bound for the uncertainty in both the deposition rate model and the calculated intake from eating food containing deposited radionuclides. Assuming that the two factors are independent, uncorrelated, and correspond to the 2 sigma values for a log normal distribution, the combined uncertainty for the pathway (deposition and intake of radionuclides from food) is a factor of 26.[1] EPA has rounded this value to 30 as an estimate of the overall food pathway uncertainty factor.

4.5 CALCULATING THE ENVIRONMENTAL CONCENTRATION OF RADIONUCLIDES: THE AIRDOS-EPA CODE

4.5.1 Introduction

Environmental concentrations of radionuclides calculated by EPA may be site specific, meaning that available data relevant to the site are incorporated into the assessment. Or an assessment may be generic; that is, an assessment of a hypothetical facility at a location considered an appropriate possibility for such a facility class. Frequently, EPA performs site-specific assessments for existing facilities, e.g., a national laboratory. In addition, EPA often employs generic assessments in evaluating alternative sitings for a proposed facility or assessing a widespread class of facilities, e.g., industrial coal-burning boilers.

In any case, EPA makes both individual and collective (population) assessments. The purpose of the individual assessment is to assess doses and lifetime risk to individuals living near a facility. EPA's assumption is that these individuals reside at the same location much of their lives and that their exposures extend from infancy on through adulthood. The doses and risks calculated are expectation values, i.e., the estimates are intended to be typical for a person living a long period of time under the assessed conditions. EPA's collective (or population) assessments evaluate doses and risks to a population that may be regional (typically up to 80 km distant), long-range (e.g., the coterminous United States), or worldwide as appropriate. The risk is usually expressed as the expected number of premature deaths in the population per year of facility operation.

4.5.2 AIRDOS-EPA

EPA has used the AIRDOS-EPA code (Mo79) to calculate environmental concentrations resulting from radionuclide

---

[1] $\exp[2 \ln^2 (10)]^{1/2} = 26$

emissions into air. The results of this analysis are estimates of air and ground surface radionuclide concentrations; intake rates via inhalation of air; and ingestion of radioactivity via meat, milk, and fresh vegetables. The atmospheric and terrestrial transport models used in the code, their implementation, and the applicability of the code to different types of emissions are described in detail in Mo79. Input to AIRDOS-EPA is extensive, but its preparation can be facilitated by using the preprocessor PREPAR (Sj84). Appendix A of this document summarizes many of the default values and assumptions used in EPA's assessments.

AIRDOS-EPA calculates atmospheric dispersion for radionuclides released from one to six stacks or area sources. Radionuclide concentrations in meat, milk, and fresh produce are estimated by coupling the deposition rate output of the atmospheric dispersion models with the Regulatory Guide 1.109 (NRC77) terrestrial food chain models. Radionuclide concentrations for specified distances and directions are calculated for the following exposure pathways: (1) immersion in air containing radionuclides, (2) exposure to ground surfaces contaminated by deposited radionuclides, (3) inhalation of radionuclides in air, and (4) ingestion of food in the area. The code may be used to calculate either annual individual exposures or annual population exposures at each grid location. For either option, AIRDOS-EPA output tables summarize air concentrations and surface deposition rates as well as the intakes and exposures for each location. In addition, working level exposures are calculated and tabulated for evaluating the inhalation of short-lived progeny of radon-222.

Assessment Grid

AIRDOS-EPA has provision for either a rectangular or a circular calculational grid. The customarily used circular grid (see Figure 4-3) has 16 directions proceeding counterclockwise from north to north-northeast. The user chooses the grid distances. Generally, successive distances are chosen with increasing spacing. It is important to realize that the calculational grid distances and the set of distances associated with population and food production data are one and the same. Hence, the concentration calculated for each grid distance must be the appropriate average value for the corresponding range of distances covered by the population and agricultural data. Choosing a suitable set of grid distances may require different compromises of convenience for different assessments and may be different for individual and collective assessments of the same facility.

Environmental Accumulation Time

An AIRDOS-EPA assessment is based on what can be viewed as a snapshot of environmental concentrations after the assessed facility has been operating for some period of time. The choice

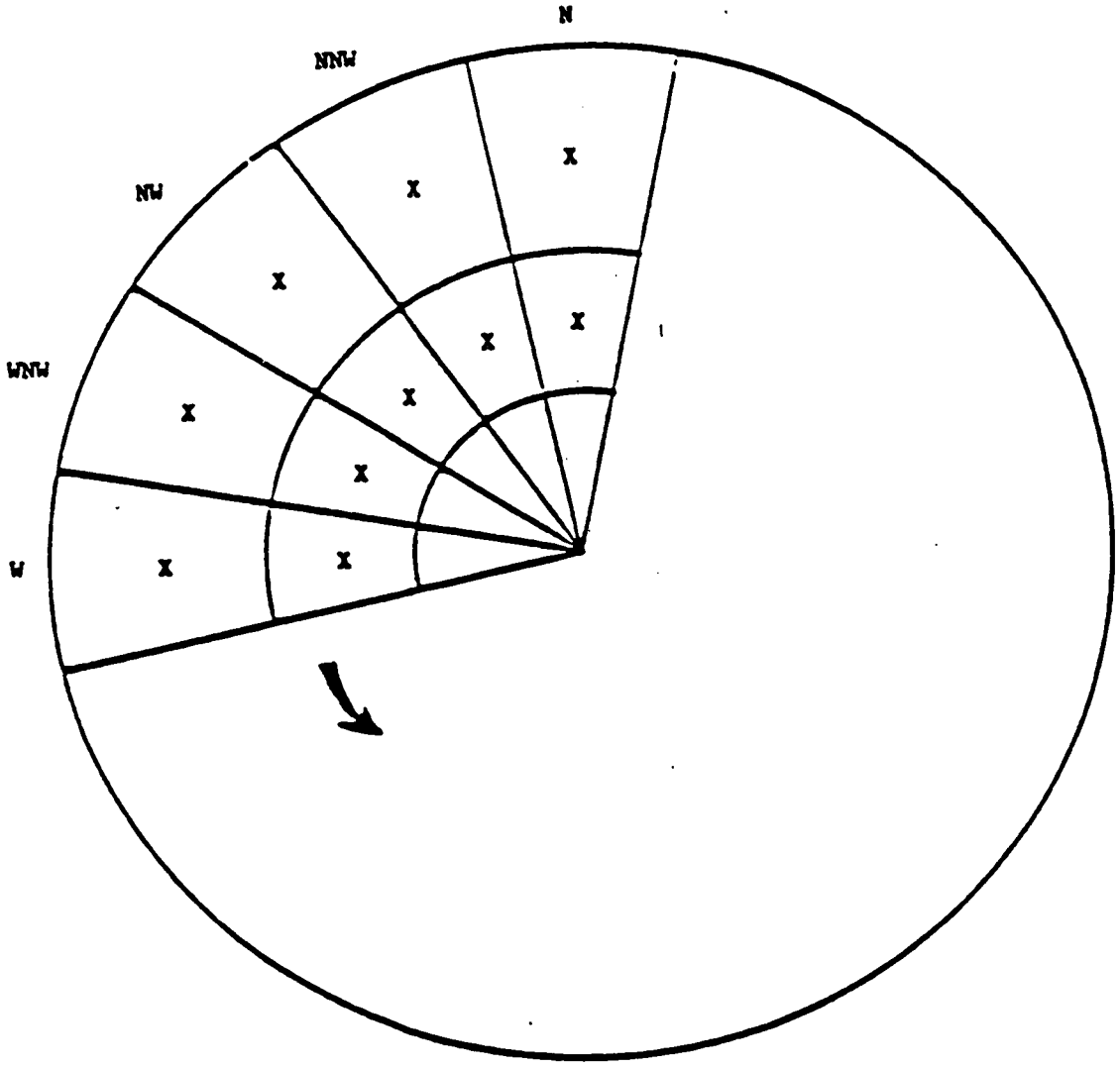

X - Assessment grid locations at up to 20 distances (2 shown) and 16 directions (5 shown)

Figure 4-3. Circular grid system used by AIRDOS-EPA.

of an environmental accumulation time affects only those pathways dependent on terrestrial concentrations, i.e., ground surface exposure and food intakes. Usually, the accumulation time for an individual assessment is chosen to be consistent with the expected life of the facility (or 100 years when a similar facility might be expected to replace the present one at the end of its useful life). For collective assessments, 100 years is customarily used.

Source Considerations

Point sources are characterized by their physical height and, when desired, the parameters to calculate buoyant or momentum plume rise using Brigg's (Br69) or Rupp's (Ru48) formulations respectively. Alternatively, a fixed plume rise may be specified for each Pasquill-Gifford atmospheric stability class A through G.

The area source model is similar to that of Culkowski and Patterson (Cu76) and transforms the original source into an annular segment with the same area. At large distances, the transformed source approaches a point source at the origin, while at distances close to the origin, it approaches a circle with the receptor at its center.

Building wake effects and downwash are not included in the AIRDOS-EPA models. The same type of rise calculation (buoyant, momentum, or fixed) is used for all sources. As many as six sources may be assessed, but for calculational purposes, they are all considered to be co-located at the origin of the assessment grid.

Radionuclide Releases

Releases for up to 36 radionuclides may be specified for AIRDOS-EPA. Each release is characterized by the radionuclide name, effective decay constant during dispersion, precipitation scavenging coefficient, deposition velocity, and settling velocity, as well as the annual activity release for each source. Decay products that are significant for the assessment of a radionuclide must be included in the list of releases. There is no explicit method for calculating radionuclide ingrowth during atmospheric dispersion in AIRDOS-EPA.

Parameters such as particle size, respiratory clearance class, and gastrointestinal absorption factor (f_1) are passed on for use in the DARTAB (Be81) dose and risk assessments as described in Chapters 5 and 6.

The approach ORP has used for calculating a precipitation scavenging coefficient is based on Slinn's (Sl77) equation 32:

$$\lambda_{sc} = \frac{c\ J_o\ E(a,R_m)}{R_m} \tag{4-15}$$

where λ_{sc} is the scavenging coefficient, c is a constant (Slinn uses 0.5), J_o is the rainfall rate, and E is the collection efficiency for a particle of radius a by drops of characteristic radius R_m. Slinn (Sl77, p. 23) considers the effects of dry deposition and interprets Dana and Wolf's (Da68, Wo69, Da70) data as supporting a value for E of 0.2, essentially independent of particle size. Adopting Slinn's typical value of R_m for a frontal rain (0.3 mm) and selecting a long-term average value of 1,000 mm/yr (3.16×10^{-5} mm/s) for J_o, we obtain:

$$\lambda_{sc} = \frac{0.5\ (3.16 \times 10^{-5})\ 0.2}{0.3} \tag{4-16}$$

$$= 1.05 \times 10^{-5}\ s^{-1}$$

This value has been rounded to $10^{-5}\ s^{-1}$ as a working value for the precipitation scavenging coefficient and then scaled according to the annual precipitation at the assessment location for use in AIRDOS-EPA. There is substantial uncertainty in interpreting environmental scavenging data, and this estimate is accurate to within an order of magnitude. The EPA scaling procedure reflects the premise that the variation of rainfall from one location to another depends more on rain frequency than on intensity during rainfall episodes.

Dispersion

Wind and stability class frequencies for each direction are the primary data for calculating atmospheric dispersion. The required data for AIRDOS-EPA are calculated from a joint frequency distribution of wind speed and atmospheric stability class for each direction. Inasmuch as the assessments require long-term average dispersion values, the sector-averaged Gaussian plume option is used. The vertical dispersion parameter (σ_z) is calculated using Brigg's formulas (Gi76). Vertical dispersion is limited to the region between the ground and a mixing depth lid. The harmonic mean of Holzworth's (Ho72) morning and afternoon mixing depths is customarily employed for this value; that is,

$$h_\ell = \frac{2(\ell_a \cdot \ell_p)}{\ell_a + \ell_p} \tag{4-17}$$

000066

where ℓ_a and ℓ_p are respectively the morning and afternoon mixing depths and h_ℓ is their harmonic mean. At large distances, the concentration is uniform between the ground and the lid.

Deposition Rate

AIRDOS-EPA models both dry and wet deposition processes. Resuspension, the reintroduction of deposited material into the atmosphere, is not modeled in AIRDOS-EPA. The dry deposition rate is the product of the deposition velocity and the near ground-level air concentration, while the wet deposition rate is the product of the precipitation scavenging coefficient and the vertically integrated air concentration. Wet deposition decreases monotonically with distance and is independent of the effective release height of the source, while the effect of source height can be significant for dry deposition. For locations close to an elevated source, wet deposition can provide the principal source of radionuclide exposure. Concentrations are adjusted for depletion due to deposition at each downwind distance.

Ground Surface Concentration

AIRDOS-EPA calculates the ground surface concentration from the total (dry plus wet) deposition rate. The soil concentration is calculated by dividing this value by the effective agricultural soil surface density (kg/m^2). Both concentrations are calculated for the end of the environmental accumulation time t_b and can include the ingrowth from deposited parent radionuclides as well as removal due to radiological decay and environmental processes such as leaching.

Ingrowth from a parent radionuclide is calculated using a decay product ingrowth factor. The ingrowth factor is the equivalent deposition rate for a unit deposition rate of the parent radionuclide. For example, the ingrowth factor for lead-210 as a parent of polonium-210 would be calculated by determining the concentration of polonium-210 at time t_b due to a unit deposition rate of lead-210 and dividing it by the corresponding concentration for a unit deposition rate of polonium-210. These ingrowth factors must be calculated in advance of running AIRDOS-EPA and are dependent on both the accumulation time t_b and the soil removal constants for the nuclides in the radionuclide chain (lead-210, bismuth-210, and polonium-210 in this case).

Concentrations in Food

Radionuclide concentrations in food are calculated using essentially the same model as in NRC Regulatory Guide 1.109 (NRC77). Changes from that model include consideration of environmental removal from the root zone, and separate values for food and pasture crops of the interception fraction, areal yield, and soil-to-plant transfer values. Concentration calculations for meat and milk use the same models as the Regulatory Guide model. There are numerous parameters in the terrestrial pathways

model. Appendix A of this volume of the BID contains tables of values used in these assessments.

Population and Agricultural Data

For a collective (population) assessment, population and agricultural data for each grid location must be provided. EPA uses the 1970 census enumeration district data to calculate population distributions. AIRDOS-EPA calculates the collective assessment for agricultural products based on consumption by the assessment area population. The assessment can be based on agricultural production by choosing utilization factors large enough to ensure that all items produced are consumed.

Food Utilization Factors

In addition to the consumption rate for different food categories (leafy vegetables, other produce, meat, and milk), the user may specify the fraction of vegetables, meat, and milk that are (1) home grown, (2) produced in the assessment area, or (3) imported from outside the assessment area. Those in the third category are considered to contain no radionuclides. Those from the second category have the average concentration for that category produced within the assessment area, while concentrations for the first category are those that would occur at each grid location. Appendix A of this volume provides some typical food source fractions for urban and rural assessment areas. Note that if the assessment considers food to be only home grown or imported from outside the assessment area, then the actual quantity of food produced at each location is not relevant to the assessment. Experience has shown that the ingestion doses and risks for the nearby individual are usually dominated by the radionuclide intake from home-grown food, and hence there is generally no significant difference between assuming that food that is not home grown is obtained from the assessment area or is imported from outside the assessment area.

Special Radionuclides

Special consideration is given to the radionuclides tritium, carbon-14, and radon-222. The specific activity of tritium in air (pCi/g of H_2O), is calculated for an absolute humidity of 8 mg/m^3 (NRC77). Etnier (Et80) has calculated average absolute humidities for over 200 U.S. locations. The 8 mg/m^3 value would be within a factor of 2 for most of them. The specific activity of atmospheric carbon-14 (pCi/g of carbon) is calculated for a CO_2 concentration of 330 ppm by volume (Ki78). Concentrations of these nuclides in vegetation are calculated on the assumption that the water and carbon content in vegetation are from the atmosphere and have the same specific activity as in the atmosphere. The radon-222 concentration in air is replaced by its short-lived decay product concentration in working level units using a fixed equilibrium fraction (typically 0.5 for calculating population health risks).

4.6 REFERENCES

Ba76 Baker, D.A., Hoenes, G.R., and Soldat, J.K., "FOOD-An interactive code to calculate internal radiation doses from contaminated food products," in Proceedings of the Conference on Environmental Modeling and Simulation, Ott, W.R., editor, EPA 600/9-76-016, p. 204, Office of Research Development and Office of Planning and Management, U.S. Environmental Protection Agency, Washington, D.C., July 1976.

Ba84 Baes, C.F. III, Sharp, R.D., Sjoreen, A.L., and Shor, R.W., A Review and Analysis of Parameters for Assessing Transport of Environmentally Released Radionuclides through Agriculture, ORNL-5786, Oak Ridge National Laboratory, Oak Ridge, Tenn., September 1984.

Be81 Begovich, C.L., Eckerman, K.F., Schlatter, E.C., Ohr, S.Y., and Chester, R.O., DARTAB: A program to combine airborne radionuclide environmental exposure data with dosimetric and health effects data to generate tabulation of predicted impacts, ORNL/5692, Oak Ridge National Laboratory, Oak Ridge, Tenn., August 1981.

Br69 Briggs, G.A., Plume Rise, TID-25075, U.S. Atomic Energy Commission Critical Review Series, National Technical Information Service, Springfield, Va., November 1969.

Cu76 Culkowski, W.M. and Patterson, M.R., A Comprehensive Atmospheric Transport and Diffusion Model, ORNL/NSF/EATC-17, National Oceanic and Atmospheric Administration, Atmospheric Turbulence and Diffusion Laboratory, Oak Ridge, Tenn., 1976.

Da68 Dana, M.T. and Wolf, M.A., "Experimental Studies in Precipitation Scavenging," in Pacific Northwest Laboratory Annual Report for 1967 to the USAEC Division of Biology and Medicine, Vol. II, Physical Sciences, Part 3, Atmospheric Sciences, Simpson C.L. et al., US.AEC Report BNWL-715-3, pp. 128-140, Battelle Pacific Northwest Laboratories, Richland, Wa., October 1968.

Da70 Dana, M.T., Wolf, M.A., and duPlessis, L.A., "Field Experiments in Precipitation Scavenging," in Pacific Northwest Laboratory Annual Report for 1969 to the USAEC Division of Biology and Medicine, Vol. II, Physical Sciences, Part 1, Atmospheric Sciences, Simpson, C.L. et al., USAEC Report BNWL-1307 (Pt. 1), pp. 77-81, Battelle Pacific Northwest Laboratories, June 1970.

Et80 Etnier, E.L., "Regional and site-specific absolute humidity data for use in tritium dose calculations," Health Phys. 39, 318-320, 1980.

Gi76 Gifford, F.S. Jr., "Turbulent Diffusion-Typing Schemes: A Review," Nucl. Saf. 17(1), 68-86, 1976.

Ha82 Hanna, S.R., Briggs, G.A., and Hosker, R.P. Jr., Handbook on Atmospheric Diffusion, DOE/TIC-11223, Technical Information Center, U.S. Department of Energy, Washington, D.C., January 1982.

Ho72 Holzworth, G.C., Mixing Heights, Wind Speeds an Potential for Urban Air Pollution Throughout the Contiguous United States, Publication No. AP-101, U.S. Environmental Protection Agency, Office of Air Programs, Research Triangle Park, N.C., 1972.

Ho79 Hoffman, F.O. and Baes, C.F. III, A Statistical Analysis of Selected Parameters for Predicting Food Chain Transport and Internal Dose of Radionuclides, NUREG/CR-1004, Oak Ridge National Laboratory, Oak Ridge, Tenn., 1979.

Ki78 Killough, G.C. and Rohwer, P.S., "A new look at the dosimetry of ^{14}C released into the atmosphere as carbon dioxide," Health Phys., 34, 141-159, 1978.

Li79 Little, C.A. and Miller, C.W., The Uncertainty Associated with Selected Environmental Transport Models, ORNL-5528, Oak Ridge National Laboratory, Oak Ridge, Tenn., November 1979.

Mi82 Miller, C.W. and Little, C.A., A Review of Uncertainty Estimates Associated with Models for Assessing the Impact of Breeder Radioactivity Releases, ORNL-5832, Oak Ridge National Laboratory, Oak Ridge, Tenn., August 1982.

Mo79 Moore, R.E., Baes, C.F. III, McDowell-Boyer, L.M., Watson, A.P., Hoffman, F.O., Pleasant, J.C., and Miller, C.W., AIRDOS-EPA: A Computerized Methodology for Estimating Environmental Concentrations and Dose to Man from Airborne Releases of Radionuclides, EPA 520/1-79-009 (reprint of ORNL-5532), U.S. Environmental Protection Agency, Office of Radiation Programs, Washington, D.C., December 1979.

NCRP84 National Council on Radiation Protection and Measurements, Radiological Assessment: Predicting the Transport, Bioaccumulation, and Uptake by Man of Radionuclides Released to the Environment, NCRP Report No. 76, National Council on Radiation Protection and Measurement, Bethesda, Md., March 1984.

NRC77 U.S. Nuclear Regulatory Commission, "Calculation of Annual Doses to Man from Routine Releases of Reactor Effluents for the Purpose of Evaluating Compliance with 10 CFR Part 50 Appendix I (Revision 1)," Regulatory Guide 1.109, Office of Standards Development, Washington, D.C., October 1977.

Ru48 Rupp, A.F., Beall, S.E., Bornwasser, L.P., and Johnson, D.H., Dilution of Stack Gases in Cross Winds, USAEC Report AECD-1811 (CE-1620), Clinton Laboratories, 1948.

Sl77 Slinn, W.G.N., "Precipitation Scavenging: Some Problems, Approximate Solution, and Suggestions for Future Research," in Precipitation Scavenging (1974), CONF-741003, Technical Information Center, Energy Research and Development Administration, Washington, D.C., June 1977.

Sj84 Sjoreen, A.L., and Miller, C.W., PREPAR-A User Friendly Preprocessor to Create AIRDOS-EPA Input Data Sheets, ORNL-5952, August 1984.

Ti83 Till, J.E. and Meyer, H.R., Radiological Assessment, NUREG/CR-3332, ORNL-5968, Division of Systems Integration, Office of Nuclear Reactor Regulation, U.S. Nuclear Regulatory Commission, Washington, D.C., September 1983.

Wo69 Wolf, M.A. and Dana, M.T., "Experimental Studies in Precipitation Scavenging," in Pacific Northwest Laboratory Annual Report for 1968 to the USAEC Division of Biology and Medicine.

5. RADIATION DOSIMETRY

5.1 INTRODUCTION

The setting of standards for radionuclides requires an assessment of the doses received by individuals who are exposed by coming into contact with radiation sources. Two forms of potential radiation exposures can occur from these sources -- internal and external. Internal exposures can result from the inhalation of contaminated air or the ingestion of contaminated food or water. External exposures can occur when individuals are immersed in contaminated air or water or are standing on contaminated ground surfaces. Internal or external doses can result from either direct contact with the radiation from radionuclides at the site area or from radionuclides that have been transported from these sites to other locations in the environment. The quantification of the doses received by individuals from these radiation exposures is called radiation dosimetry. This chapter highlights the internal and external dosimetric models used by EPA to assess the dose to individuals exposed to radionuclides.

The models for internal dosimetry consider the quantity of radionuclides entering the body, the factors affecting their movement or transport through the body, and the energy deposited in organs and tissues from the radiation that is emitted during spontaneous decay processes. The models for external dosimetry consider only the photon doses to organs of individuals who are immersed in air or are exposed to a contaminated ground surface. In addition, the uncertainties associated with each model will be discussed.

5.2 BASIC CONCEPTS

Radioactive materials produce radiation as their constituent radioactive nuclides undergo spontaneous radioactive decay. The forms of emitted energy are characteristic of the decay process and include energetic charged particles (alpha and beta particles) and photons (gamma rays and x-rays). Alpha particles are nuclei of helium atoms and carry a positive charge two times that of an electron. These particles can produce dense ionization tracks in the biological material that they traverse. Beta particles are electrons or positrons emitted in radioactive decay. Their penetration power in material is greater than that of alpha particles. Gamma and x-rays are electromagnetic radiation and are distinguishable from alpha and beta particles by their greater penetrating power in material.

This section introduces some terminology used in Chapters 5 and 6 to describe internal and external dosimetry. For a more detailed explanation, the reader is referred to reports published in this area by the International Commission on Radiation Units and Measurements (ICRU80), International Commission on

Radiological Protection (ICRP84), and National Council on Radiation Protection and Measurements (NCRP71).

5.2.1 Activity

The activity of a sample of any radionuclide of species, i, is the rate at which the unstable nuclei spontaneously decay. If N is the number of unstable nuclei present at a certain time, t, its activity, $A_i(t)$, is given by

$$A_i(t) = -dN/dt = \lambda_i^R N , \qquad (5\text{-}1)$$

where λ_i^R is the radioactive decay constant. The customary unit of activity is the curie (Ci); its submultiples, the millicurie (mCi), the microcurie (μCi), and the picocurie (pCi), are also often used. The curie, which is defined as 3.7×10^{10} disintegrations per second, is the approximate activity of 1 gm of radium-226.

The time variation of the activity can be expressed in the form:

$$A_i(t) = A_{oi} \exp(- \lambda_i^R t). \qquad (5\text{-}2)$$

A_{oi} is the activity of nuclide i at time t=0. For a sample of radioactive material containing more than one radionuclide, the total activity is determined by summing the activities for each radionuclide:

$$A(t) = \Sigma_i A_i(t) \qquad (5\text{-}3)$$

5.2.2 Radioactive Half-Life

From the above equations, it is apparent that the activity exponentially decays with time. The time when the activity of a sample of radioactive material containing species i becomes one-half its original value (i.e., the time t that $A_i(t) = A_{oi}/2$) is called its radioactive half-life, T_i^R, and is defined as:

$$T_i^R = (\ln 2)/ \lambda_i^R \qquad (5\text{-}4)$$

The unit for the radioactive half-life is any suitable unit of time such as seconds, days, or years. The specific activity of a radionuclide (the activity per unit mass) is inversely

proportional to the half-life and can vary over many orders of magnitude.

5.2.3 Radionuclide Chains

Radionuclides decay either to stable atoms or to other radioactive species called daughters. For some species, a decay chain of daughter products may be produced until stable atoms are formed. For example, strontium-90 decays by emitting a beta-particle, producing the daughter yttrium-90, which also decays by beta emission to form the stable atom zirconium-90:

$$^{90}Sr(28.6\ yr) \xrightarrow{\beta} {}^{90}Y(64.0\ h) \xrightarrow{\beta} {}^{90}Zr(stable) \qquad (5\text{-}5)$$

5.2.4 Biological Half-Life

The biological half-life of radionuclides is the time required for biological tissues to eliminate one-half of the activity by elimination processes. This time is the same for both stable and radioactive isotopes of any given element.

5.2.5 Internal and External Exposures to Radionuclides

The term "exposure", in the context of this report, denotes physical interaction of the radiation emitted from the radioactive material with cells and tissues of the human body. An exposure can be "acute" or "chronic" depending on how long an individual or organ is exposed to the radiation. Internal exposures occur when radionuclides, which have entered the body through the inhalation or ingestion pathway, deposit energy to organ tissues from the emitted gamma, beta, and alpha radiation. External exposures occur when radiation enters the body directly from sources located outside the body, such as radiation from material on ground surfaces, dissolved in water, or dispersed in the air.

In general, for sources of concern in this report, external exposures are from material emitting gamma radiation. Gamma rays are the most penetrating of the emitted radiations, and external gamma ray exposure may contribute heavily to radiation doses to the internal organs. Beta and alpha particles are far less penetrating and deposit their energy primarily on the skin's outer layer. Consequently, their contribution to the absorbed dose to the total body, compared to that deposited by gamma rays, is negligible and will not be considered in this report.

5.2.6 Absorbed Dose and Absorbed Dose Rate

The radiological quantity absorbed dose, D, denotes the mean energy imparted $\Delta\bar{\epsilon}$, by ionizing radiation to a small finite mass of organ tissue with a mass, Δm, and is expressed as

$$D = d\bar{\epsilon}/dm = \lim_{\Delta m \to 0} (\Delta\bar{\epsilon}/\Delta m). \qquad \text{(rad)} \quad (5\text{-}6)$$

Internal and external exposures from radiation sources are not usually instantaneous but are distributed over extended periods of time. The resulting time rate of change of the absorbed dose to a small volume of mass is referred to as the absorbed dose rate, D:

$$\dot{D} = dD/dt = \lim_{\Delta t \to 0} (\Delta D/\Delta t). \qquad \text{(mrad/y)} \quad (5\text{-}7)$$

The customary unit of absorbed dose rate is any quotient of the rad (or its multiple or submultiple) and a suitable unit of time. In this report, absorbed dose rates are generally given in mrad/yr.

5.2.7 Linear Energy Transfer (LET)

The linear energy transfer, L_∞, is a quantity that represents the energy lost, by collision, per unit length by charged particles in an absorbing medium. It represents the increment of the mean energy lost, ΔE, to tissue by a charged particle of specified energy in traversing a distance, ΔX:

$$L_\infty = dE/dX = \lim_{\Delta x \to 0} (\Delta E/\Delta X) \qquad (\text{keV } \mu\text{m}^{-1}) \quad (5\text{-}8)$$

For photons, L_∞ represents the energy imparted by the secondary electrons (electrons that are knocked out of their orbitals by primary radiation) resulting from secondary interactions between the photons and tissue material. High-LET radiation (alpha particles) imparts more energy per unit length of organ tissue than does low-LET radiation (x-rays, gamma rays, and beta particles). Consequently, the former are more effective per unit dose in causing biological damage.

5.2.8 Dose Equivalent and Dose Equivalent Rate

Dose equivalent is a special radiation protection quantity that is used to express the absorbed dose in a manner that

considers the difference in biological effectiveness of various kinds of ionizing radiation. The ICRU has defined the dose equivalent, H, as the product of the absorbed dose, D, the quality factor, Q, and all other modifying factors, N, at the point of interest in biological tissue (ICRU80). This relationship can be expressed in the following manner:

$$H = D\ Q\ N. \qquad \text{(rem)} \quad (5\text{-}9)$$

The quality factor is a dimensionless quantity that depends on the collision stopping power for charged particles, and it accounts for the differences in biological effectiveness found among varying types of radiation. By definition, it is independent of tissue and biological endpoint. The generally accepted values for quality factors for high- and low-LET radiation, which are used by EPA, are given in Table 5-1. The product of all other modifying factors, N, such as dose rate, fractionation, etc., is taken as 1.

Table 5-1. Quality factor for various types of radiation (ICRP77).

Radiation Type	Quality Factors (Q)
x-rays, gamma rays, and electrons	1
alpha particles	20

The dose equivalent rate, $\dot{H}$, is the time rate of change of the dose equivalent to organs and tissues and is expressed as:

$$\dot{H} = dH/dt = \lim_{\Delta t \to 0} (\Delta H/\Delta t). \qquad \text{(mrem/yr)} \quad (5\text{-}10)$$

5.2.9 Effective Dose Equivalent and Effective Dose Equivalent Rate

The ICRP has defined the effective dose equivalent, H_E, as:

$$H_E = \Sigma_T\ w_T\ H_T, \qquad \text{(rem)} \quad (5\text{-}11)$$

where H_T is the dose equivalent in tissue and w_T is the weighting factor, which represents the estimated proportion of the stochastic risk resulting from tissue, T, to the stochastic risk

when the whole body is uniformly irradiated (ICRP77). The weighting factors recommended by the ICRP are listed in Table 5-2.

Table 5-2. Weighting factors recommended by the ICRP for stochastic risks (ICRP77).

Organ or Tissue	W_T
Gonads	0.25
Breast	0.15
Red Bone Marrow	0.12
Lung	0.12
Thyroid	0.03
Bone Surfaces	0.03
Remainder	0.30

The effective dose equivalent rate is the time derivative of the dose equivalent and is expressed as H_E, where:

$$\dot{H}_E = \Sigma_T \, w_T \, \dot{H}_T. \qquad \text{(mrem/yr)} \quad (5\text{-}12)$$

5.2.10 Relationship of the Dose Equivalent and the Effective Dose Equivalent to Risk

The dose equivalent was introduced by the ICRP to allow one to combine and compare - on the basis of biological effects - absorbed doses of different types of radiation. Subsequently, the effective dose equivalent was introduced to provide a single-valued indicator of risk for dose equivalents distributed nonuniformly in the body. By convention, these concepts, in combination with the ICRP-recommended quality factors and organ-weighting factors, are widely used in radiation protection. These recommended factors, however, are based on dose response models that differ significantly from those used by EPA to estimate risk (see Chapter 6).

To calculate risk, EPA first calculates age-specific, high- and low-LET absorbed dose rates, by organ, for a uniform

intake or external exposure rate. The risk from each year's dose is then calculated using a life table procedure in conjunction with age- and organ-specific risk models adapted from the BEIR III report (NAS80).

These models (see Chapter 6) assume a linear dose-response relationship and a lifetime relative risk projection for cancers other than bone cancer and leukemia, for which absolute risk projection is employed. Finally, the risks from each year's dose are summed to arrive at the risk from lifetime exposure.

In calculating dose equivalents and effective dose equivalents, the ICRP Publication 30 convention was employed, including the same quality factors and organ-weighting factors. Nevertheless, in calculating the risk from a given absorbed dose of alpha particle irradiation, RBEs of 8 and 2.7 were used for the induction of cancers and genetic effects, respectively (see Chapter 6). Since these RBEs are lower than the assumed alpha quality factor (Q=20), EPA's estimates of the risk per unit dose equivalent (mrem) will be lower for alpha particles than for x-rays or gamma rays. Likewise, the ICRP organ-weighting factors shown in Table 5-2 do not stand in the same proportion as the organ risks calculated using the EPA models for cancer induction or genetic mutations. Furthermore, EPA considers somatic and genetic risks separately. Thus, even if attention was restricted to low-LET radiation, the estimated risk from a given effective dose equivalent will vary, depending on how the absorbed dose is distributed within the body.

To summarize, because EPA risk models differ from those underlying the ICRP recommendations, the risks calculated directly by EPA are not strictly proportional to the effective dose equivalents derived using ICRP quality factors and organ weighting factors.

5.2.11 Working Levels and Working Level Months

The working level is a unit that has been used as a measure the radon decay-product activity in air. It is defined as any combination of short-lived radon daughters (through polonium-214) per liter of air that will result in the ultimate emission of 1.3×10^5 MeV of alpha energy. An activity concentration of 100 pCi/L of radon-222 in equilibrium with its short-lived daughters gives rise to a potential alpha-energy concentration of approximately 1 WL. The WL unit could also be used for thoron daughters. The potential alpha energy exposure is commonly expressed in units of working level months (WLM). One WLM corresponds to an exposure to a concentration of 1 WL for the commonly used reference period of 170 hours.

5.2.12 Customary and SI Units

The relationship between the customary units used in this text and the international system of units (SI) for radiological

quantities is shown in Table 5-3. While the SI radiological units are almost universally used in other countries for radiation protection regulation, the United States has not yet officially adopted their use for such purposes.

Table 5-3. Comparison of customary and SI special units for radiation quantities.

	Customary Unit		Special SI Unit	
Quantity	Name	Definition	SI Unit	Definition
Activity (A)	curie (Ci)	3.7×10^{10} s^{-1}	becquerel (Bq)	1.0 s^{-1}
Absorbed dose (D)	rad	10^{-2} J kg^{-1}	gray (Gy)	1.0 J kg^{-1}
Dose equivalent (H)	rem	10^{-2} J kg^{-1}	sievert (Sv)	1.0 J kg^{-1}
Linear energy transfer (L_∞)	kiloelectron volts per micrometer (keV μm^{-1})	1.602×10^{-10} J m^{-1}		

5.3 EPA DOSIMETRIC MODELS

The EPA dosimetric models, to be discussed in the following sections, have been described in detail in previous publications (Du80, Su81). Information on the elements treated in these sections was taken directly from those documents or reports. In most cases, the EPA models are similar or identical to those recommended by the ICRP (ICRP79, ICRP80, ICRP81). However, differences in model parameters do exist for some radionuclides (Su81). The basic physiological and metabolic data used by EPA in calculating radiation doses are taken from ICRP reports (ICRP75, ICRP79).

5.3.1 Internal Dose Models

EPA implements contemporary models to estimate absorbed dose rates as a function of time to specified organs in the body. Estimates of the doses resulting from the deposition and retention of inhaled particulates in the lung and their subsequent absorption into the blood and clearance into the gastrointestinal (GI) tract are made using the ICRP Task Group Lung Model (ICRP66).

000079

5.3.1.1 Generalized Scheme for Estimating Organ Absorbed Dose Rates

5.3.1.1.1 Distribution of Activity of Radionuclides in the Body

The complex behavior of radionuclides is simplified conceptually by considering the body as a set of compartments. A compartment may be any anatomical, physiological, or physical subdivision of the body throughout which the concentration of a radionuclide is assumed to be uniform at any given time. The terms "compartment" and "organ" are often used interchangeably, although some of the compartments considered in this report may represent only portions of a structure usually considered to be an organ, while some compartments may represent portions of the body usually not associated with organs. Examples of compartments used in this report are the stomach, the pulmonary region of the lung, the blood, or the bone. Within a compartment, there may be more than one "pool" of activity. A pool is defined to be any fraction of the activity within a compartment that has a biological half-life which is distinguishable from the half-time(s) of the remainder of activity within the compartment.

Activity entering the body by ingestion is assumed to originate in the stomach compartment; activity entering through inhalation is assumed to originate in a compartment within the lung (the tracheo-bronchial, pulmonary, or naso-pharyngeal region). From the stomach, the activity is viewed as passing in series through the small intestine, the upper large intestine, and the lower large intestine, from which it may be excreted. Also, activity reaching the small intestine may be absorbed through the wall into the bloodstream, from which it may be taken in parallel into any of several compartments within the skeleton, liver, kidney, thyroid, and other organs and tissues.

The list of organs or regions for which dose rates are calculated is found in Table 5-4. Activity in the lung may reach the bloodstream either directly or indirectly through the stomach or lymphatic system. The respiratory system and gastrointestinal tract models are discussed further in later sections. Figure 5-1 illustrates the EPA model used to represent the movement of radioactivity in the body.

EPA models separately consider the intake and subsequent behavior of each radionuclide in the body. The models also allow for the formation of radioactive decay products within the body, and it is assumed that the movement of internally produced radioactive daughters is governed by their own metabolic properties rather than those of the parent. This is in contrast to the ICRP assumption that daughters behave exactly as the parent.

Table 5-4. Target organs and tissues used for calculating the ICRP effective dose equivalent and the EPA cancer risk.

ICRP effective dose equivalent	EPA cancer risk
Ovaries	
Testes	
Breast[a]	Breast
Red marrow	Red marrow
Lungs[b]	Pulmonary lung[c]
Thyroid	Thyroid
Bone surface	Bone surface (endosteum)
Stomach wall	Stomach wall
Small intestine wall	Intestine[d]
Upper large intestine wall	
Lower large intestine wall	
Kidneys	Kidneys
Liver	Liver
Pancreas	Pancreas[e]
Brain	
Spleen	
Thymus	
Uterus	
Adrenals	
Bladder wall	

a) Dose to breast is assumed to equal dose to muscle.

b) The ICRP considers the lungs to be a composite of the trachiobronchial region, pulmonary region, and the pulmonary lymph nodes with a combined mass of 1,000 g (ICRP79).

c) The EPA calculates lung cancer risk on the basis of the dose to the pulmonary lung. The mass of this region, which does not include venous or arterial blood, is considered to be 570 g.

d) The EPA averages the values for the small, upper large, and lower large intestine using weights of 0.2, 0.4, and 0.4 respectively for calculating the risk of bowel cancer.

e) The pancreas is also used as a surrogate organ for calculating the cancer risk for all other organs and tissues.

000081

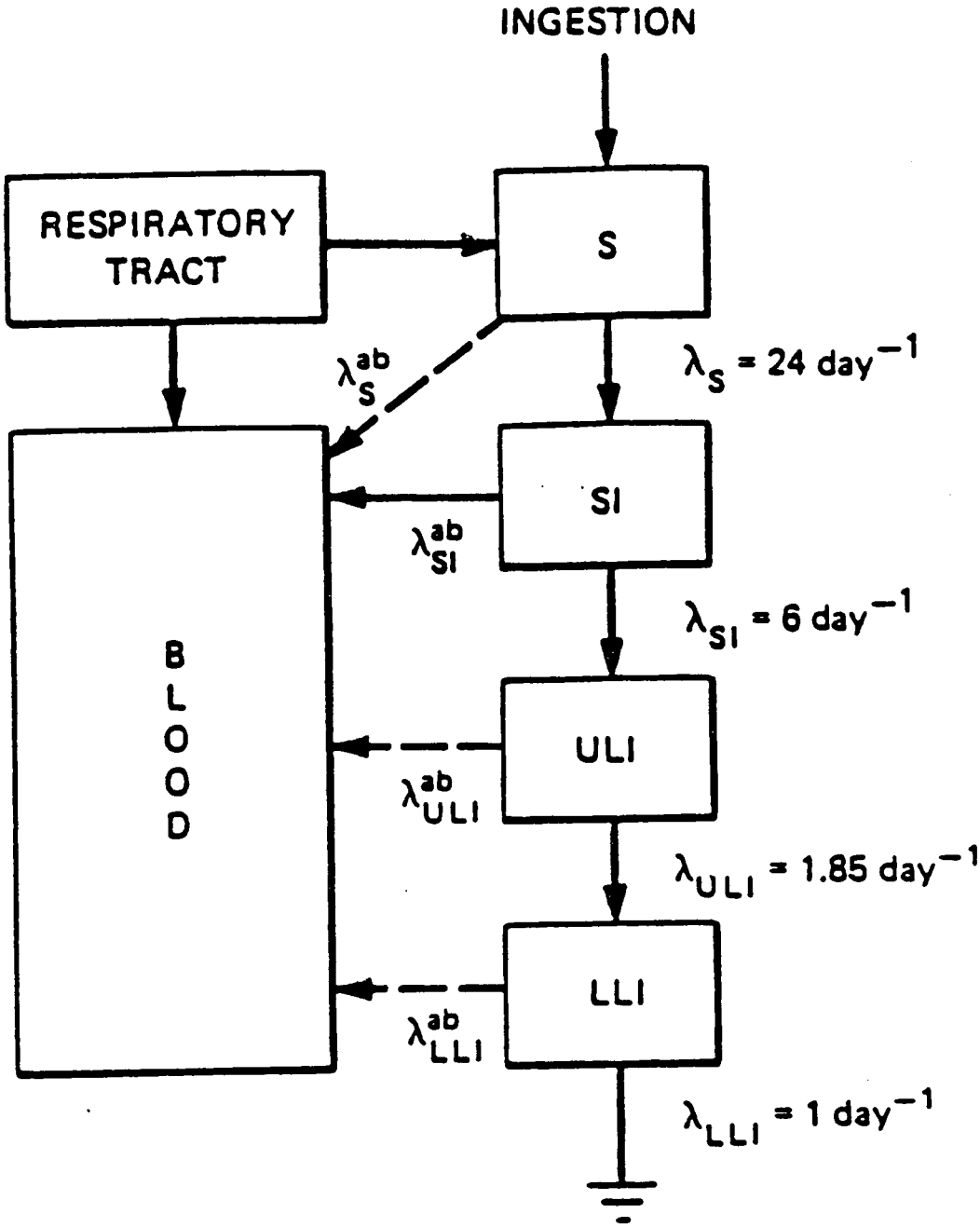

Figure 5-1. A schematic representation of radioactivity movement among respiratory tract, gastrointestinal tract, and blood.

S = stomach
SI = small intestine
ULI = upper large intestine
LLI = lower large intestine
λ = elimination rate constant

If $A_{ik}(t)$ denotes the activity of the ith species of the chain in organ k and if that activity is divided among several "pools" or "compartments" indexed by subscript l, then the time rate of change of activity can be modeled by a system of differential equations of the following form:

$$A_{ilk} = -(\lambda_i^R + \lambda_{ilk}^B)A_{ilk} + C_{ilk}(\lambda_i^R \sum_{j=1}^{i-1} B_{ij} \sum_{r=1}^{L_{jk}} A_{jr} + p_{ik})$$
$$l = 1.....L_{ik} \qquad (5\text{-}14)$$

where compartment l is assumed to have L_{ik} separate pools of activity, and where:

A_{ilk} = the activity of species i in compartment l of organ k;

λ_i^R = (ln 2) / T_i^R, where T_i^R = radioactive half of species i;

λ_{ilk}^B = rate coefficient ($time^{-1}$) for biological removal of species i from compartment l of organ k;

L_{ik} = number of exponential terms in the retention function for species i in organ k;

B_{ij} = branching ratio of nuclide j to species i;

p_{ik} = inflow rate of the ith species onto the organ k; and

c_{ik} = the fractional coefficient for nuclide i in the lth compartment of organ k.

The subsystem described by these L_{ik} equations can be interpreted as a biological compartment in which the fractional retention of radioactive species is governed by exponential decay. Radioactivity that enters an organ may be lost by both radioactive decay and biological removal processes. For each source organ, the fraction of the initial activity remaining at any time after uptake at time t = 0 is described by a retention function consisting of one or more exponentially decaying terms:

$$R_{ik}(t) = \Sigma_{l=1}^{L_{ik}} c_{ilk} \exp[-(\lambda_i^R + \lambda_{ilk}^B)t] \qquad (5\text{-}15)$$

The subscript l in the above equation represents the lth term of the retention function, and the coefficients c_{ilk} can be considered as "pathway fractions."

000083

5.3.1.1.2 Dose Rates to Target Organs

The activity of a radionuclide in a compartment is a measure of the rate of energy being emitted in that compartment, at any time, t, and can be related to the dose rate to a specific organ at that time. This requires estimating the fraction of the energy emitted by the decay of the radionuclide in each compartment that is absorbed by the specific organ.

The absorbed dose rate, $\dot{D}_i(X;t)$ to target organ X at time t due to radionuclide species i in source organs $Y_1, Y_2, \ldots, Y_M$ is estimated by the following equation:

$$\dot{D}_i(X;t) = \sum_{k=1}^{M} D_i(X \leftarrow Y_k;t) \qquad (5\text{-}16)$$

where: $\dot{D}_i(X \leftarrow Y_k;t) = S_i(X \leftarrow Y_k)\ A_{ik}(t)$; and $A_{ik}(t)$ is the activity, at time t of species i in source organ Y_k.

$S_i(X \leftarrow Y_k)$, called the S-factor, represents the average dose rate to target organ X from one unit of activity of the radionuclide uniformly distributed in source organ or compartment Y_k. It is expressed in the following manner:

$$S_i(X \leftarrow Y_k) = c \sum_m f_m\ E_m\ \phi_m(X \leftarrow Y_k) \qquad (5\text{-}17)$$

where:

c = a constant that depends on the units of dose, energy, and time being used;

f_m = intensity of decay event (number per disintegration);

E_m = average energy of decay event (Mev); and

$\phi_m(X \leftarrow Y_k)$ = specific absorbed fraction, i.e., the fraction emitted energy from source organ Y_k absorbed by target organ X per gram of X,

where the summation is taken over all events of type m. The units for S-factors depend on the units used for activity and time; thus, the S-factor units may be rad/Ci-day. The S-factor is similar in concept to the SEE factor (specific effective energy) used by the ICRP Committee 2 in Publication 30. However, the SEE factor includes a quality factor for the type of radiation emitted during the transformation.

The above equations are combined to produce the following expressions for the absorbed dose rates to target organs at any

time due to one unit of activity of radionuclide species, i, uniformly distributed in source organs $Y_1 \ldots Y_k$:

$$\dot{D}(X;t) = \sum_k \sum_m A_{ik}(t)\ S_{im}(X \leftarrow Y_k) \qquad (5\text{-}18)$$

The corresponding dose equivalent rate, $\dot{H}_i(X;t)$, can be estimated by inclusion of the quality factor, Q_m, and the modifying factor, $N_m(Y_k)$:

$$\dot{H}_i(X;t) = \sum_k \sum_m A_{ik}(t)\ Q_m N_m(Y_k)\ S_{im}(X \leftarrow Y_k) \qquad (5\text{-}19)$$

Implicit in the above equations is the assumption that the absorbed dose rate to an organ is determined by averaging absorbed dose distributions over its entire mass.

Alpha and beta particles are usually not sufficiently energetic to contribute a significant cross-irradiation dose to targets separate from the source organ. Thus, the absorbed fraction for these radiations is generally assumed to be just the inverse of the mass of organ X, or if the source and target are separated, then $\phi_m(X \leftarrow Y) = 0$. Exceptions occur when the source and target are in very close proximity, as is the case with various skeletal tissues. Absorbed fractions for cross-irradiations by beta particles among skeletal tissues were taken from ICRP Publication 3 (ICRP80). The energy of alpha particles and their associated recoil nuclei is generally assumed to be absorbed in the source organ. Therefore, $\phi_m(X \leftarrow X)$ is taken to be the inverse of the organ mass, and $\phi_m(X \leftarrow Y) = 0$ if X and Y are separated. Special calculations are performed for active marrow and endosteal cells in bone, based on the method of Thorne (Th77).

5.3.1.1.3 Monte Carlo Methodology to Estimate Photon Doses to Organs

The Monte Carlo method uses a computerized approach to estimate the probability of photons interacting within target organ X after emission from source organ Y. The method is carried out for all combinations of source and target organs and for several photon energies. The body is represented by an idealized phantom in which the internal organs are assigned masses, shapes, positions, and attenuation coefficients based on their chemical composition. A mass attenuation coefficient, μ_o, is chosen, where μ_o is greater than or equal to the mass attenuation coefficients for any region of the body. Photon courses are simulated in randomly chosen directions, and potential sites of interactions are selected by taking distances traversed by them as $-\ln r/\mu_o$, where r is a random number distributed between 0 and 1. The process is terminated when

either the total energy of photons has been deposited or the photon escapes from the body. The energy deposition for an interaction is determined according to standard equations (ORNL74).

5.3.1.1.4 Effects of Decay Products

In calculating doses from internal and external exposures, the in-growth of radioactive decay products (or daughters) must be considered for some radionuclides. When an atom undergoes radioactive decay, the new atom created in the process, which may also be radioactive, can contribute to the radiation dose to organs or tissues in the body. Although these decay products may be treated as independent radionuclides in external exposure, the decay products of each parent must be followed through the body in internal exposure situations. The decay product contributions to the absorbed dose rates, which are included in EPA calculations, are based on the metabolic properties of the individual daughters and the organ in which they occur.

5.3.1.2 Inhalation Dosimetry - ICRP Respiratory Tract Model

As stated earlier, individuals immersed in contaminated air will breathe radioactive aerosols or particulates, which can lead to doses to the lung and other organs in the body. The total internal dose caused by inhalation of these aerosols can depend on a variety of factors, such as breathing rates, particle sizes, and physical activity. Estimating the total dose to individuals over a specific time period requires specifying the distribution of particle depositions in the respiratory tract and the mathematical characteristics of the clearance parameters. The EPA currently uses assumptions established by the ICRP Task Group on Lung Dynamics (TGLM)(ICRP66). This section will summarize the essential features of that model. For a more comprehensive treatment, the reader is referred to the actual report.

The basic features of the ICRP lung compartmental model are shown in Figure 5-2. According to this model, the respiratory tract is divided into four regions: naso-pharyngeal (N-P), tracheo-bronchial (T-B), pulmonary (P), and lymphatic tissues.

In the model, the regions N-P, T-B, and P are assumed to receive fractions D_3, D_4, and D_5 of the inhaled particulates, where the sum of these is less than 1 (some particles are removed by prompt exhalation). The values D_3, D_4, and D_5 depend on the activity median aerodynamic diameter (AMAD) of the inspired particles. For purposes of risk calculations, EPA uses AMADs of 1 micron. The lung model employs three clearance classes, D, W, and Y, corresponding to rapid, intermediate, and low clearance, respectively, of material deposited in the respiratory passages. The clearance class depends on chemical properties of the inhaled particles.

COMPARTMENT		CLASS D T	CLASS D F	CLASS W T	CLASS W F	CLASS Y T	CLASS Y F
N-P	a	0.01	0.5	0.01	0.1	0.01	0.01
(D_3 = 0.30)	b	0.01	0.5	0.4	0.9	0.4	0.99
T-B	c	0.01	0.95	0.01	0.5	0.01	0.01
(D_4 = 0.08)	d	0.2	0.05	0.2	0.5	0.2	0.99
	e	0.5	0.8	50	0.15	500	0.05
P	f	n.a.	n.a.	1.0	0.4	1.0	0.4
(D_5 = 0.25)	g	n.a.	n.a.	50	0.4	500	0.4
	h	0.5	0.2	50	0.05	500	0.15
L	i	0.5	1.0	50	1.0	1000	0.9

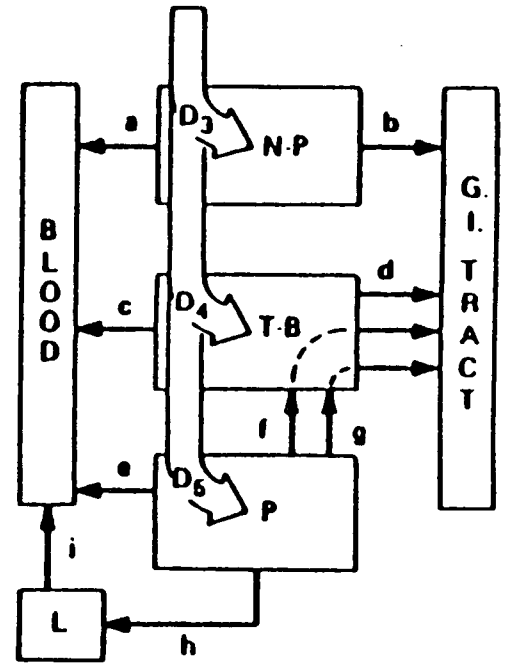

The columns labeled D, W, and Y correspond, respectively, to rapid, intermediate, and slow clearance of the inspired material (in days, weeks, or years). The symbols T and F denote the biological half-time (days) and coefficient, respectively, of a term in the appropriate retension function. The values shown for D_3, D_4, and D_5 correspond to activity median aerodynamic diameter, AMAD = 1 μm, and represent the fraction of the inspired material depositing in the lung regions.

Figure 5-2. The ICRP Task Group lung model for particulates.

000087

Like the ICRP, EPA assumes that the absorbed dose rate to the N-P region can be neglected. Unlike the ICRP, however, EPA averages the dose over the pulmonary region of the lung (compartments e through h), to which is assigned a mass of 570 g, including capillary blood (ICRP75). In addition, it is assumed that the total volume of air breathed in one day by a typical member of the general population is 22,000 liters. This value was determined by averaging the 23 ICRP adult male and female values based on 8 hours of working "light activity," 8 hours of nonoccupational activity, and 8 hours of resting.

5.3.1.3 Ingestion Dosimetry - ICRP GI Tract Model

According to the ICRP 30 GI tract model, the gastrointestinal tract consists of four compartments: the stomach (S), small intestine (SI), upper large intestine (ULI), and lower large intestine (LLI). The fundamental features of the model are shown in Figure 5-1. It is assumed that absorption into the blood occurs only from the small intestine (SI).

This model postulates that radioactive material entering the compartments of the GI tract is exponentially removed by both radioactive decay and biological removal processes, and that there is no feedback. Absorption of a particular nuclide from the GI tract is characterized by f_1, which represents that fraction of the nuclide ingested which is absorbed into body fluids if no radiological decay occurs:

$$f_1 = \lambda_{SI}^{ab} / (\lambda_{SI}^{ab} + \lambda_{SI}) \qquad (5\text{-}20)$$

where

λ_{SI}^{ab} = the absorption coefficient (s^{-1})

λ_{SI} = the transfer coefficient fron the small intestine to the large intestine (s^{-1})

Figure 5-1 graphically presents the role of these coefficients in the gastrointestinal model. The kinetic model, as formulated by the ICRP, does not permit total absorption of a nuclide ($f_1 = 1$).

5.3.1.4 Dose Rate Conversion Factors

EPA uses the computer code RADRISK (Du80) for calculating radiation doses and risks to individuals resulting from a unit intake of a radionuclide, at a constant rate, for a lifetime exposure (50-yr dose commitment). These calculations are done for the inhalation and ingestion pathways to individuals who are exposed by immersion in contaminated air or by contaminated ground surfaces.

RADRISK computes doses for both chronic and acute exposures. Following an acute intake, it is assumed the activity in the body decreases monotonically, particularly for radionuclides with rapid radiological decay rates or rapid biological clearance. In the case of chronic exposure, the activity in each organ of the body increases monotonically until a steady state is achieved, at which time the activity remains constant. The instantaneous dose rates at various times after the start of chronic exposure provide a reasonably accurate (and conservative) estimate of the total annual dose for chronic exposure conditions. However, the instantaneous dose rates may err substantially in the estimation of annual dose from an acute exposure, particularly if the activity levels decrease rapidly.

Since the rate of change in activity levels in various organs is more rapid at early times after exposure, doses are computed annually for the first several years and for progressively longer periods thereafter, dividing by the length of the interval to estimate the average annual dose. This method produces estimates of risk that are similar to those computed by the original RADRISK methodology for chronic exposures and provides a more accurate estimate of the risks from acute intakes.

5.3.1.5 Special Radionuclides

The following paragraphs briefly summarize some of the special considerations for particular elements and radionuclides.

5.3.1.5.1 Tritium and Carbon-14

Most radionuclides are nuclides of elements found only in trace quantities in the body. Others like tritium (hydrogen-3) or carbon-14 must be treated differently since they are long-lived nuclides of elements that are ubiquitous in tissue. An intake of tritium is assumed to be completely absorbed and to be rapidly mixed with the water content of the body (Ki78a).

The estimates for inhalation include consideration of absorption through the skin. Organ dose estimates are based on the steady-state specific-activity model described by Killough et al. (Ki78a).

Carbon-14 is assumed to be inhaled as CO_2 or ingested in a biologically bound form. Inhaled carbon-14 is assumed to be diluted by stable carbon from ingestion (Ki78b). This approach allows separate consideration of the ingestion and inhalation pathways. The specific-activity model used for organ dose estimates is also that of Killough et al. (Ki78a). Short-lived carbon radionuclides (e.g., carbon-11 or carbon-15) are treated as trace elements, and the organ doses are calculated accordingly.

5.3.1.5.2 Noble Gases

Retention of noble gases in the lungs is treated according to the approach described by Dunning et al. (Du79). The inhaled gas is assumed to remain in the lungs until lost by radiological decay or respiratory exchange. Translocation of the noble gas to systemic organs is not considered, but doses due to translocated decay products produced in the lungs are calculated. The inhalation of the short-lived decay products of radon is assessed using a potential alpha energy exposure model (see Chapter 6) rather than by calculating the doses to lung tissues from these radionuclides.

5.3.1.5.3 Uranium and Transuranics

The metabolic models for transuranics elements (polonium, neptunium, plutonium, americium, and curium) are consistent with those used for the EPA transuranic guidance (EPA77). A GI tract to blood absorption factor of 10^{-3} is used for the short-lived nuclides of plutonium (plutonium-239,-240, and -242), while a value of 10^{-4} is used for other transuranics. For soluble forms of uranium, a GI tract to blood absorption factor of 0.2 is used in accordance with the high levels of absorption observed for low-level environmental exposures (Hu73, Sp73).

5.3.1.6 Uncertainties in Internal Dose Estimates

Estimates of radiation dose in risk assessment studies have traditionally been based on dosimetric models derived in the context of radiation protection for adult workers. Despite the obvious differences between risk assessment and radiation protection, the dosimetric formulations of the latter have been generally adopted, often with no modifications, in risk assessment activities. This approach permits use of a substantial body of information assembled by international experts from the occupational setting and provides models that avoid the complex problems encountered in biokinetic modeling of radionuclides for the general public in an age-dependent sense. However, the continued use in risk assessment of dosimetric data derived for workers, which neglects organ-specific biokinetics and age dependence, is becoming increasingly difficult to justify. One major limitation of the current ad hoc dosimetric formulations is the great difficulty in making informed estimates of the uncertainties in the estimated dose.

All dosimetry models are inherently uncertain. At best, these models can only approximate real situations in organs and tissues in humans. Consequently, without extensive human data, the uncertainties associated with their use for risk assessment purposes is extremely difficult, and in some cases impossible, to quantify. However, consideration of their limitations in estimating doses to an average member of the general population is essential.

In applying the dosimetric models in current use, as discussed in the previous sections, the primary sources of uncertainty are attributed to ICRP model formulation and parameter variability produced by measurement error or natural variation. The purpose of this section is to provide a general but limited discussion of these sources and to introduce an uncertainty scheme for classifying radionuclides. The authors gratefully acknowledge Dr. Keith Eckerman of Oak Ridge Laboratory for discussions with respect to implementation of ICRP models and for guidance regarding the magnitude of uncertainties. However, the conclusions presented here are those of the Agency.

5.3.1.6.1 Uncertainties Due to ICRP Model Formulation

Uncertainty in calculations based on ICRP models arises primarily from five sources: (1) the uncertainty in the Reference Man data; (2) the uncertainty in the lung and GI-tract model describing the translocation and absorption of inhaled or ingested activity into the blood; (3) the uncertainty associated with the formulation of the ICRP Publication 30 biokinetic models describing the distribution and retention of the activity among the various organs in the body; (4) the uncertainty in the dose models to calculate the absorbed dose to organs from that activity; and (5) the uncertainty in the model parameters.

5.3.1.6.2 Reference Man Concept

To establish a degree of consistency in occupational dosimetry calculations, the ICRP developed the concept of Reference Man (ICRP75). Reference Man is a conceptual individual who has the anatomical and physiological characteristics of a healthy 20 to 30 year old male with a total body mass of 70-kg. The anatomical and physiological data of Reference Man have been embedded in many computational models for estimating organ doses and applied in radiation protection and in some calculations for medicine.

Although these data have been extensively applied in calculating doses, the approach in which Reference Man data is used to represent average individuals in a specific population introduces bias from the outset. The uncertainties in this approach are primarily due to age- and sex- specific differences in the anatomical and physiologic parameters. Biological and ethnic variability also contribute. In addition, the Reference Man data do not always represent data for a 70-kg man. Many of the data found in ICRP Publication 23 were from adults who had anatomical or physiological characteristics significantly different from those of a 70-kg man.

Due to the many parameters involved and the quality of the data available to define the numerical values, it is very difficult to establish the level of uncertainty in using Reference Man data to estimate doses to the average individual in the U.S. population. Furthermore, the Reference Man concept was

not formulated so as to facilitate a quantitative analysis of the uncertainty in the dose estimates. Finally, Reference Man is not intended to be representative of the U.S. population.

5.3.1.6.3 ICRP Respiratory Tract Model

When individuals inhale radioactive aerosols, the dose to the lungs and other organs in the body depends primarily on how the aerosols are deposited in and cleared from the airways of the respiratory tract. Mechanisms involved in the deposition of inhaled aerosols and gases are affected by physical and chemical properties, including aerosol size distribution, density, shape, surface area, electrostatic charge, chemical composition and gas diffusivity and solubility. Deposition is also affected by respiratory physiology, morphometrics and pathology.

The ICRP modeling system assumes that deposition rates for aerosols in the respiratory tract are controlled primarily by three mechanisms: sedimentation, impaction and Brownian diffusion. The major uncertainties associated with the ICRP deposition models for the lungs are: (1) the uncertainty in the anatomical model of the respiratory tract, (2) the uncertainty in the effective aerodynamic diameter of the inhaled particles, (3) the uncertainty in the breathing patterns and rates, and (4) the questionable validity of the fluid dynamic models used for all exposure situations.

The number of particles deposited in the lung essentially depends on physiologic, morphometric and anatomical properties, such as airway dimensions and numbers, branching and gravitational angles of airways, and distances to the alveolar walls. The ICRP respiratory tract model (ICRP66) uses the anatomical model devised by Findeisen (Fi35) in its dosimetric calculations. This model assumes that lung airways are rigid tubes with symmetric dichotomous branching patterns and that their morphometric properties are those of an adult male. In reality, however, the airways have circular ridges or longitudinal grooves (FRC67), and many airways, like the trachea, are irregular in shape (Br52). In addition, airways change in diameter and length during inspiration and expiration (Ho75, Hu72, Th78), which affects gravitational and branching angles (Ph85). Since many of these properties depend on age and sex, using the anatomic and morphometric lung properties of an adult male for estimating doses to other members of the population is likely to introduce considerable bias.

Clearance of particles from the respiratory tract depends on many factors, such as site of deposition, chemical composition, physical properties of the deposited material, and mucociliary transport rates. The uncertainties associated with using the values provided by the ICRP are due primarily to the sparseness of data on lung clearance mechanisms, in general, and secondarily to age, activity levels and general health status of the individual at the time of exposure. Furthermore, as stated

earlier, most of the lung deposition data and models are derived from studies of healthy adults. Studies have shown, however, that children's lungs differ from adults' with respect to anatomical, physiological, and morphological properties. As a consequence, particle deposition in the respiratory tract is expected to be higher in children than in adults.

5.3.1.6.4 ICRP GI- act Model

The ICRP GI-tract model assumes that ingested material (radionuclides) moves in sequence through the stomach, small intestine, upper large intestine, and lower large intestine. The model depicts an exponential removal from each compartment, characterized by a single removal rate that depends only on the compartment. The model has no provision for addressing endogenous secretion. In addition, it is assumed that radionuclides are absorbed into the blood from the small intestine (SI).

Uncertainties arise when applying these assumptions to the estimation of doses to average individuals. Although radionuclides transported through the GI tract are primarily absorbed into the blood stream from the SI, fractions can be absorbed from the other compartments. Furthermore, the removal rates, which are model parameters, vary among different individuals in the population. Considerable differences can exist depending on the type of radionuclide ingested, its chemical form, the amount and composition of food in the stomach at the time of intake and other factors which vary because of nutritional status, age, and the sex of the individual. The f_1 factor, which represents the fraction of material absorbed from the SI, generally contributes the largest uncertainty in the GI tract model. This parameter will be discussed in a later section.

5.3.1.6.5 ICRP 30 Biokinetic Models

The ICRP biokinetic models were chosen to represent adult male members of the population. Uncertainties are associated with the approach because they do not account for differences in the metabolic behavior of radionuclides, which vary depending on age, sex, and dietary intakes of an individual at the time of exposure. In addition, many of the models chosen for dosimetry calculations are based on very limited observational data that cannot be reliably applied across the population.

Below is a list of additional uncertainties associated with the ICRP biokinetic models:

(a) The models have been constructed largely from animal data in such a way that extrapolation to humans has no strong logical or scientific support.

(b) Doses to heterogeneously distributed radiosensitive tissues of an organ (e.g., skeletal and lung tissues)

cannot be estimated accurately, since the actual movement of radionuclides in the body is not accurately tracked.

(c) Some radionuclides are assigned the model of an apparently related nuclide (e.g., americium, curium, neptunium are assigned the plutonium model) although differences in metabolism are known.

(d) The growth of radioactive daughters is often not handled realistically, and the format of the models makes it difficult to supply alternative assumptions.

(e) The models often yield inaccurate estimates of excretion even for the average adult.

5.3.1.6.6 ICRP Dose Models

ICRP models estimate doses to organs of the body by considering the distribution of the radioactivity and the interaction of radiation with cells and tissues in these organs. Estimates of the absorbed dose in a region (referred to as the target region) depend upon the spatial relationships of that region to the regions containing the radionuclide (referred to as source regions) and how the activity is distributed in the source region. For organs other than bone, it is assumed that the radionuclides are uniformly distributed in the source regions and that the radiosensitive cells of interest are uniformly distributed in the target region. However, this assumption may bias the dose estimates because of the nonuniformity of the activity that is normally found in human organs.

5.3.1.6.7 Uncertainties Due to Parameter Variability

Most discussions concerning the uncertainties in dose estimates focus on the uncertainty associated with model parameters. These discussions assume that the ICRP metabolic and dose models are correct. The most important parameters of concern for dose assessment calculations are: radionuclide intake rates, organ masses, blood transfer factors, organ uptake rates, and biological half-times of radionuclides. Although parameter variability can be attributed to measurement and sampling errors and natural biological variation, in many cases, age is the largest source of variability.

Depending on the type of radionuclide ingested, the age and element dependency in the metabolic and physiological processes determines how the dose to target organs varies with age. For example, strontium tends to follow the calcium pathways in the body and deposits to a large extent in the skeleton. In fact, the fraction of ingested strontium eventually reaching the skeleton at a given age depends largely on the skeletal needs for calcium at that age, even though the body is able to discriminate

somewhat against strontium in favor of calcium after the first few weeks of life.

Given the importance of age as a contributor to parameter variability in dose estimates, the possible age dependence in thyroid dose for chronic ingestion of a fixed iodine-131 concentration in milk is examined in more detail below. Some other examples of parameter variability will also be noted.

A simple model that can be used to relate the absorbed dose rate to a target organ due to radioactivity located in that organ can be expressed as follows :

$$\dot{D}(t) = c\ I\ f_1\ f_2'\ E\ [1-\exp(-\lambda t)]/m\lambda \qquad (5\text{-}21)$$

where:

$\dot{D}(t)$ = absorbed dose rate (rad/day);

I = radionuclide intake rate (Ci/day);

f_1 = fraction of ingested activity transferred to the blood;

f_2' = fraction of blood activity transferred to the organ;

m = target organ mass (g);

λ = elimination constant (day^{-1}) = $0.693/T_{1/2}$, where $T_{1/2}$ is the effective half-time, including the effects of both biological removal and radioactive decay.

E = energy absorbed by the target organ for each radioactive transformation.

c = proportionality constant (51.2×10^6g rad Ci^{-1} $MeV^{-1}d^{-1}$).

For simplicity, we will consider the case where t is very large compared to the biological half-life of the incorporated radionuclide, so that the term in the bracket is approximately 1:

$$\dot{D}(t) = c\ I\ f_1\ f_2'\ E/m\lambda \qquad (5\text{-}22)$$

In addition, it is assumed that the parameters remain constant throughout the period of investigation and are independent of each other.

000095

Equation 5-22 is a simplified form of the model used by EPA to estimate the absorbed dose rates to target organs resulting from the ingestion of radioactive material. It represents the absorbed dose rate to a target organ from particulate radiation due to radioactivity that is uniformly distributed in that organ.

For this illustration, the chronic intake of iodine-131 is considered assuming that it behaves metabolically the same as stable iodine. It is further assumed that iodine is rapidly and almost completely absorbed into the bloodstream following inhalation or ingestion. From the blood, iodine enters the extracellular fluid and quickly becomes concentrated in the salivary, gastric, and thyroid glands. It is rapidly secreted from the salivary and gastric glands but is retained in the thyroid for relatively long periods.

The intake and metabolism of iodine have been reviewed extensively in the literature. Two papers have used published data to model the absorbed dose from radioiodine. In the first (Du81), the authors compiled and evaluated the variability in three of the principal biological parameters contained in Equation 5-22: m, λ, and f_2'. In the second (Br69), the author provided age-specific values for most of the same model parameters. Differences in these data illustrate how parameter variability, when used in the same model, can affect absorbed dose rate estimates for members of the general population.

Intake Rate, I

The amount of radioactive material taken into the body over a specified period of time by ingestion or inhalation is expected to be proportional to the rate of intake of food, water, or air containing such material, which, in turn, would depend on such factors as age, sex, diet, and geographical location. Therefore, understanding the patterns of food intake for individuals in the population is important in assessing the possible range of intake rates for radionuclides.

Recent EPA analyses were done to assess the daily intake rates of food and water for individuals in the general population. These studies showed that age and sex played an important role (Ne84). Age significantly affects food intake rates for all of the major food classes and, with one exception, subclasses. The relationships between food intake and age are, in most cases, similar to growth curves; there is a rapid increase in intake at an early stage of physical development, then a plateau is reached in adulthood, followed by an occasional decrease after age 60.

When sex differences were significant, males, without exception, consumed more than females. The study also showed that relative consumption rates for children and adults depend on the type of food consumed. The amount of radioactivity taken into the body per unit intake of food, air, and water depends on its

relative density (amount of radioactivity contained in the material per unit volume). The most likely pathway to organs in the body for the ingestion of radioactive iodine comes from drinking milk. According to the above analysis, the daily intake rate of milk by children (under 1 yr) was twice that for an adult (25 to 29 yr) male. The intake rates for milk used in the models are 0.7 L/day and 0.5 L/day for the child and adult, respectively.

Transfer Fraction, f_1

While uncertainty in f_1 is not an important consideration for iodine, it can be very significant for other elements. Experimental studies suggest that the f_1 value for some radionuclides may be orders of magnitude higher in newborns than in adult mammals, with the largest relative changes with age occurring for those nuclides with small adult f_1 values (Cr83). For some radionuclides, the f_1 value appears to decrease rapidly in the first year of life. This can be related to the change in diet during this time period, which could affect both the removal rate from the small intestine to the upper large intestine and the absorption rate from the small intestine to the bloodstream. Studies have indicated that the wall of the small intestine is a selective tissue and that absorption of nutrients is to a large extent controlled by the body's needs (Cr83). In particular, the fraction of calcium or iron absorbed depends on the body's needs for these elements, so the f_1 value for these elements and for related elements such as strontium, radium, and barium (in the case of calcium) and plutonium (in the case of iron) may change as the need for calcium or iron changes during various stages of life.

For some essential elements, such as potassium and chemically similar radioelements, such as rubidium and cesium, absorption into the bloodstream is nearly complete at all ages, so that changes with age and possible homeostatic adaptations in absorption are not discernible. The fraction of a radioelement that is transferred to the blood depends on its chemical form, and wide ranges of values are found in the literature for individuals who ingest the material under different conditions. For example, f_1 values for uranium were found to range from 0.005 to 0.05 for industrial workers, but a higher average value of 0.2 (0.12 to 0.31) is indicated by dietary data from persons not occupationally exposed (ICRP79). EPA has used the 0.2 value for uranium ingestion by the general population.

It appears that all iodine entering the small intestine is absorbed into the blood; hence the f_1 value is taken as 1 for all ages, which is the value used in this analysis.

Organ Masses, m

To a large extent, the variability in organ masses among individuals in the general population is related to age. For

most of the target organs listed in Table 5-2, the mass increases during childhood and continues to increase until adulthood, at which time the net growth of the organ ceases; there may be a gradual decrease in mass (for some organs) in later years.

Based on data reviewed by Dunning and Schwarz (Du81), the mass of an adult thyroid ranges from 2 to 62 g. It is expected that this parameter variability would be reflected in large dosimetric variability among adults. Children in the age group from .5 to 2 yr were found to have a mean thyroid mass of 2.1 g, while the adult group had a mean mass of 18.3 g. For this illustration, the same values are used as employed by the ICRP (20 g for the adult thyroid mass and 1.8 g for that of a 6-month-old child), which are also consistent with the recommendation of Bryant (Br69).

Organ Uptake Fraction, f_2'

The fraction of a radionuclide taken up from the blood in an organ is strongly correlated with the size of the organ, its metabolic activity, and the amount of material ingested. Iodine introduced into the bloodstream is rapidly deposited in the thyroid, usually reaching a peak slightly after 24 hours. The uptake of iodine-131 by the thyroid is similar to that of stable iodine in the diet and can be influenced by sex and dietary differences. There can be considerable variation among populations.

Dunning and Schwarz (Du81) found a mean f_2' value of 0.47 for newborns, 0.39 for infants, 0.47 for adolescents, and 0.19 for adults. This analysis uses f_2' values of .35 and .15 for a child and adult, respectively.

Effective Half-Life, $T_{1/2}$

Some data suggest a strong correlation between biological half-lives of radionuclides in organs in the body and the age of the individual. Children are expected to exhibit faster elimination rates and greater uptakes (Ro58). For iodine, a range of biological half-lives of 21 to 200 days for adults has been observed, and a similarly wide range would be expected for other age groups (Du81). Rosenberg (Ro58) found a significant correlation between the biological half-life and the age of the individual and an inverse relationship between uptake and age in subjects from 22 to 50 yr of age. Dunning and Schwarz (Du81) concluded that for adults the observed range was from 21 to 372 days; for children in the age group from .5 to 2 yr, the range was 4 to 39 days.

In light of the possible inverse relation between the biological half-life and the f_2 value, this analysis uses biological half-lives of 24 and 129 days, respectively, for children and adults, based on the paper by Bryant (Br69). Including the effect of radioactive decay, these values imply an effective half-life of 6 days in adults and 8 days in children.

Effective Energy per Disintegration, E

The effective energy per disintegration (MeV/dis) of a radionuclide within an organ depends on the decay energy of the radionuclide and the effective radius of the organ containing the radionuclide (ICRP59). It is expected, therefore, that E is an age-dependent parameter which could vary as the size of the organ changes. While very little work has been done in determining E for most radionuclides, some information has been published for iodine-131 and cesium-137. Considering the differences between the child and the adult thyroid, Bryant (Br69) estimates E to be 0.18 MeV/dis for the child and 0.19 MeV/dis for the adult. The above values correspond to a 6-month-old child with a mass of 1.8 g and an f_2 value of 0.35. The corresponding E value for the adult was calculated for a 20-g thyroid with an f_2 value of 0.3.

Taking into account all the age-dependent factors discussed above, this analysis indicates that, for a given concentration of I-131 in milk, the estimated dose rate to the thyroid of a 6-month-old child would be approximately 13 times that to an adult thyroid. In other words, use of adult parameters would underestimate the thyroid dose to the child by about a factor of 13.

5.3.1.6.8 Significance of Parameter Variabililty to EPA Dose and Risk Assessments

In its radiological risk assessments, EPA is generally interested in estimating the risk to an average individual due to chronic lifetime exposures. Variation in dosimetric parameters between people and between age groups is of reduced importance in this context because such variation gets averaged over a population and/or over a lifetime. Nevertheless, it should be kept in mind that some individuals in a population are going to be at higher risk from a given exposure. Furthermore, despite such averaging, parameter variability can contribute substantially to the uncertainty in the dose and risk estimates.

Parameter variation among individuals contributes uncertainty to the models by causing random errors in any measured human data upon which the dosimetric models are based. To the extent that the subjects from whom such data are collected are atypical of the U.S. population (e.g., with respect to health status), parameter variation may also be a source of bias. In this respect, since the parameters contained in the dosimetric models were estimated for adult males, primarily, they may not provide an adequate basis for calculating the average dose or risk in cases where age- and sex-related variations in these parameters are large. This problem becomes more significant in light of the generally higher risks associated with a given dose for childhood exposures (see Chapter 6); if doses are also higher in childhood, the enhanced effect on risk will be compounded.

5.3.1.6.9 Past Approaches Used in Estimating Uncertainties in Calculated Organ Dose

As in any predictive exercise, it is useful to question the reliability of the predictions. Variations in environmental levels, dietary and life style preferences, and the variability of controlling physiological and metabolic processes contribute to the distribution of dose among members of the exposed population. Superimposed on this variability is a component of uncertainty arising from limitations in the predictive ability of the dosimetric models themselves. Various approaches have been taken to understand and quantify these uncertainties.

It has recently become popular to estimate the uncertainty by computing the distribution of dose among exposed individuals. This approach consists of repeated solution of the dosimetric model using parameter values selected at random from a frequency distribution of potential values suggested in the literature. It is assumed that the dosimetric model has been properly formulated, although these models were developed to yield point estimates. Despite these and other difficulties, propagation of parameter uncertainty through the dosimetric equation can provide a measure of the model uncertainty. Application of these methods to the estimation of dose from iodine-131 and cesium-137 ingestion can be found in the literature (Du81, Sc82).

An alternative approach to assessing the potential variability is to consider that the observed frequency distribution of a measurable quantity is closely related to dose. Cuddihy and co-workers (Cu79) have investigated the variability of selected target organ deposition among test animals and some individuals exposed. However, they did not address differences in age, gender, magnitude or duration of exposure.

5.3.1.6.10 Uncertainty Classification of Radionuclides

In this section, radionuclides of interest are classified in terms of the uncertainties in estimated dose per unit intake. Nuclides are placed in broad groups, largely reflecting the general status of information on their biokinetic behavior in the body. It is assumed that the uncertainty associated with the calculation of the energy deposition in the target tissues is a minor contributor to the overall uncertainty.

Classification of Uncertainty in Radionuclide Dose

Establishing numerical values of uncertainty for model dose estimates of each of the many radionuclides, for each route of exposure, is a formidable task. Even if there is agreement on the definition of uncertainty, any quantification will be arbitrary to a degree. No model has been verified in man for any long-term exposure scenario; some of the models may be fundamentally wrong in their formulation. In addition, the data selected to establish the parameters used in the model may not be

representative of the population being evaluated. Most risk assessors use some informed scientific judgment in estimating the level of uncertainty in a dose model.

A broad categorization of radionuclides reflecting the estimated magnitude of the dosimetric uncertainties is presented. Because of the problems cited above with respect to the development of models and model parameters, it is quite possible that the error in model estimates may be larger than indicated in some cases. Nevertheless, this exercise is useful since it provides some perspective on the magnitude of the uncertainties in light of current evidence and focuses attention on the largest gaps in knowledge. Ultimately, however, better quantification of dose estimates and their associated uncertainties can be obtained only through the development and verification of improved dosimetric models.

Radioisotopes behave biologically like their stable elements. The elements, in turn, can be broadly grouped as: (1) essential elements and their analogs, (2) inert gases, (3) well-studied toxic metals and (4) others. Uncertainties for each of these categories will be expressed as multiplicative factors, which roughly estimate the 95% upper and lower confidence interval limits. [Since the interval is based on judgment, a preferable term would be "credibility interval" (NIH85).]

Group I - Essential Elements and Their Analogs

Essential elements are controlled by homeostatic mechanisms to within narrow tolerances. Usually, analogs of essential elements have distribution and deposition patterns similar to those of the essential element. The uncertainty expected in calculated dose for essential elements is a factor of two or less in major critical organs, perhaps 3 or less in other significant tissues and organs. The expected dose uncertainty for analogs of essential elements is perhaps a little greater, a factor of 3 or less in major organs and up to 5 or more in less significant tissues. Important radionuclides of essential elements include hydrogen-3, carbon-14, phosphorus-32, potassium-40, calsium-45, cobalt-60, iodine-129, and iodine-131; important analogs include strontium-89, strontium-90, cesium-134, cesium-137, radium-226, and radium-228.

Group II - Inert Gases

Uptake and retention of inhaled inert gases has been fairly well studied. The uncertainty in dose, particularly average whole body dose, is not expected to be large. However, the gases do not distribute uniformly in body tissues, and the effect of distribution on organ dose estimates has not been carefully addressed. The uncertainty in the calculated dose is expected to be about a factor of 2. This group includes, but is not limited to argon-41, krypton-85, xenon-133, and radon-222.

Group III - Well-Studied Toxic Metals

A number of elements have been extensively studied in animals with limited information available for man. Examples here include toxic elements encountered in industrial activities, e.g., mercury, cadmium, lead, and uranium, for which studies were carried out to help establish safe working conditions. Often the available information is not sufficiently complete to identify the dominant processes governing the biokinetic behavior or is simply fragmentary. For example, while much information exists on the biokinetics of uranium, considerable uncertainty remains associated with the absorption to blood from the small intestine. Uncertainties for dose estimates in this group of elements would be variable, ranging from 2 or less for lead up to about 5 or more for polonium, thorium, uranium, and the transuranics. Nuclides in this group include, but are not limited to lead-210, polonium-210, uranium-235, uranium-238, thorium-230, thorium-232, plutonium-239, plutonium-241, and americium-241.

Group IV - Other Elements

For a number of radionuclides information is largely limited to data from animal studies. While animal studies often are the major source of detailed information on the processes governing the biokinetics, the lack of a general framework for extrapolations to man and the limited information upon which to judge the reasonableness of the extrapolations suggest that the estimates must be considered to be potentially in error by at least an order of magnitude. Nuclides in this group include, but are not limited to cerium-144 and other rare earth elements, technetium-99, curium-244, californium-252, etc.

The groupings listed above represent the Agency's best judgment on the uncertainty of internal radionuclide dose estimates. The primary source of uncertainty is in the biokinetic modeling with little uncertainty in the physics. The magnitudes of the uncertainties posited for each group of radionuclides should be regarded as only rough estimates; however, the qualitative breakdown between groups is fairly reliable.

Specific Problems

Certain radioisotopes and aspects of dosimetry pose unique problems. While the effect of these problems may be to increase the uncertainty in dose estimates, the extent of such an increase has yet to be evaluated.

Long-Lived Bone Seekers

Radioisotopes with effective half-lives that are short compared to the average life span are expected to be in dynamic equilibrium. However, some bone seekers have long effective half-lives; therefore, they do not reach dynamic equilibrium

during a life span. Since the relevant human biokinetic data are quite limited, dose estimates for such radionuclides are more uncertain.

Nonuniformity of Distribution

The distribution of an element within an organ may not be uniform; in particular, the distribution may be nonuniform with respect to biological targets of interest. This can be a serious problem with respect to the estimation of relevant doses from internally deposited alpha emitters, given the short range of alpha particles in matter. For example, where an alpha emitter is distributed nonuniformly in bone, the calculation of doses to sensitive cells in the bone and the bone marrow will be difficult. Another example is the uncertainty in estimating doses to cells lining the GI tract from ingested alpha emitters passing through the tract. In some cases, the mucus lining may effectively shield the target cells from irradiation.

5.3.2 External Dose Models

This section is concerned with the calculation of dose rates for external exposure to photons from radionuclides dispersed in the environment. Two exposure models are discussed: (1) immersion in contaminated air and (2) irradiation from material deposited on the ground surface. The immersion source is considered to be a uniform semi-infinite radionuclide concentration in air, while the ground surface irradiation source is viewed as a uniform radionuclide concentration on an infinite plane. In both exposure modes, the dose rates to organs are calculated from the dose rate in air.

Dose rates are calculated as the product of a dose rate factor, which is specific for each radionuclide, tissue, and exposure mode, and the corresponding air or surface concentration. The dose rate factors used were calculated with the DOSFACTOR code (Ko81a,b). Note that the dose rate factors for each radionuclide do not include any contribution for decay products. For example, the ground surface dose factors for cesium-137 are all zero, since no photons are emitted in its decay. To assess surface deposition of cesium-137, the ingrowth of its decay product, metastable barium-137, which is a photon emitter, must first be calculated.

5.3.2.1 Immersion

For immersion exposure to the photons from radionuclides in air, EPA assumes that an individual is standing at the base of a semi-infinite cloud of uniform radionuclide concentration. First, the dose rate factor (the dose rate for a unit concentration) in air is calculated for a source of photons with energy E_γ. At all points in an infinite uniform source, conservation of energy considerations require that the rates of absorbed and emitted energy per unit mass be equal. The absorbed

000103

energy rate per unit mass at the boundary of a semi-infinite cloud is just half that value. Hence

$$DRF_\gamma(E_\gamma) = 1/2k\ E_\gamma/\rho \qquad (5\text{-}23)$$

where:

DRF_γ^a = the immersion dose rate per unit air concentration (rad m^3/Ci s);

E_γ = emitted photon energy (MeV);

k = units conversion factor

= 1.62E-13 (J/MeV) x 3.7E+10 (dis/s-Ci) x 1.0E+3 (g/kg) x 100 (rad kg/J)

= 5.93E+2 (g rad/MeV Ci s); and

ρ = density of air (g/m^3).

The above equation presumes that for each nuclide transformation, one photon with energy E_γ is emitted. The dose rate factor for a nuclide is obtained by adding together the contributions from each photon associated with the transformation process for that radionuclide.

5.3.2.2 Ground Surface Irradiation

In the case of air immersion, the radiation field was the same throughout the source region. This allows the dose rate factor to be calculated on the basis of energy conservation without having to consider explicitly the scattering processes taking place. For ground surface irradiation, the radiation field depends on the height of the receptor above the surface, and the dose rate factor calculation is more complicated. The radiation flux per unit solid angle is strongly dependent on the angle of incidence. It increases from the value for photons incident from immediately below the receptor to a maximum close to the horizon. Attenuation and buildup due to scattering must be considered to calculate the dose rate factor. Secondary scattering provides a distribution of photon energies at the receptor, which increases the radiation flux above that calculated on the basis of attenuation. Trubey (Tr66) has provided a useful and reasonably accurate expression to approximate this buildup:

$$B_{en}^a(\mu_a r) = 1 + C_a\ \mu_a\ r\ \exp(D_a \mu_a r) \qquad (5\text{-}24)$$

where B_{en}^a is the buildup factor (i.e., the quotient of the total energy flux and that calculated for attenuation) only for energy

in air; μ_a is the attenuation coefficient at the energy of the released photon (m^{-1}); r is the distance between the photon source and the receptor; and the Berger buildup coefficients C_a and D_a are dependent on energy and the scattering medium. The buildup factor is dimensionless and always has a value greater than unity. The resulting expression for the dose rate factor at a height z (m) above a uniform plane is

$$DRF_\gamma^a(z,E_\gamma) = 1/2k(E_\gamma/\rho)(\mu_{en}/\rho)_a(E_1(\mu_a z) + C_a/(1-D_a)\exp[-(1-D_a)\mu_a z]) \quad (5\text{-}25)$$

where $(u_{en}/\rho)_a$ is the mass energy-absorption coefficient (m^2/g) for air at photon energy E_γ (MeV); E_1 is the first order exponential integral function, i.e.,

$$E_1(x) = \int_x^\infty \frac{\exp(-u)\,du}{u} \quad (5\text{-}26)$$

C_a and D_a are the buildup coefficients in air at energy E_γ; and $k=5.93\times10^2$ (g rad/MeV Ci s) as for the immersion calculation.

As for immersion, the dose rate factor for a nuclide combines the contribution from each photon energy released in the transformation process.

5.3.2.3 Organ Doses

The dose rate factors in the preceding two sections are for the absorbed dose in air. For a radiological assessment, the absorbed doses in specific tissues and organs are needed. For this purpose, Kerr and Eckerman (Ke80, Ke80a) have calculated organ dose factors for immersion in contaminated air. Their calculations are based on Monte Carlo simulations of the absorbed dose in each tissue or organ for the spectrum of scattered photons in air resulting from a uniform concentration of monoenergetic photon sources. Kocher (Ko81) has used these data to calculate values of the ratio of the organ dose factor to the air dose factor, $G^k(E_\gamma)$, for 24 organs and tissues at 15 values of E_γ ranging from 0.01 to 10.0 MeV.

The resulting organ-specific dose rate factor for immersion is

$$DRF_\gamma^k(E_\gamma) = G^k(E_\gamma)\ DRF_\gamma^a(E_\gamma) \quad (5\text{-}27)$$

000105

For a specific nuclide, the dose rate factor is obtained by taking the sum of the contributions from each photon energy associated with the radionuclide decay.

Ideally, a separate set of $G^k(E_\gamma)$ values would be used for the angular and spectral distributions of incident photons from a uniform plane source. Since these data are not available, Kocher has used the same set of $G^k(E_\gamma)$ values for calculating organ dose rate factors for both types of exposure (Ko81).

5.3.2.4 Uncertainty Considerations in External Dose Rate Factors

In computing the immersion dose rate factor in air, the factor of 1/2 in Equation 5-27, which accounts for the semi-infinite geometry of the source region, does not provide a rigorously correct representation of the air/ground interface. However, Dillman (Di74) has concluded that this result is within the accuracy of available calculations. The radiation field between the feet and the head of a person standing on contaminated ground is not uniform, but for source photon energies greater than about 10 keV, the variation about the value at 1 meter becomes minimal. A more significant source of error is the assumption of a uniform concentration. Kocher (Ko81) has shown that sources would have to be approximately uniform over distances of as much as a few hundred meters from the receptor for the dose rate factors to be accurate for either ground surface or immersion exposures. Penetration of deposited materials into the ground surface, surface roughness, and terrain irregularities, as well as the shielding provided by buildings to their inhabitants, all serve to reduce doses.

The effect of using the same factors to relate organ doses to the dose in air for ground surface as for immersion photon sources has not been studied. The assumptions that the radiation field for the ground surface source is isotropic and has the same energy distribution as for immersion clearly do not hold true, but more precise estimates of these distributions are not likely to change the organ dose rate factors substantially.

Kocher (Ko81) has noted that the idealized photon dose rate factors are "likely to be used quite extensively even for exposure conditions for which they are not strictly applicable... because more realistic estimates are considerably more difficult and expensive [to make]."

5.4 REFERENCES

Be70 Bernard, J.D., McDonald, R.A., and Nesmith, J.A., "New Normal Ranges for the Radioiodine Uptake Study", J. Nucl. Med., 11:(7):449-451, 1970.

Br52 Bruckner, H. Die Anatomie der Lufttrohre beim lebenden Menchen, A. Anat., Entwicklungsgeschichte, 116:276, 1952 [cited in Li69].

Br69 Bryant, P.M., "Data for Assessments Concerning Controlled and Accidental Releases of ^{131}I and ^{137}Cs to Atmosphere", Health Phys., 17(1):51-57, 1969.

Cr83 Crawford, D.J., An Age-Dependent Model for the Kinetics of Uptake and Removal from the G.I. Tract, Health Phys. 44: 609-622, 1983.

Cu79 Cuddihy, R.G., McClellan, R.O., and Griffith, W.C., Variability in Target Deposition Among Individuals Exposed to Toxic Substances, Toxicol. Appl. Pharmacol. 49: 179-187, 1979.

Di74 Dillman, L.T., "Absorbed Gamma Dose Rate for Immersion in a Semi-Infinite Radioactive Cloud", Health Phys., 27(6):571, 1974.

Du79 Dunning, D.E. Jr., Bernard, S.R., Walsh, P.J., Killough, G.G. and Pleasant, J.C., Estimates of Internal Dose Equivalent to 22 Target Organs for Radionuclides Occurring in Routine Releases from Nuclear Fuel-Cycle Facilities, Vol. II, Report No. ORNL/NUREG/TM-190/V2, NUREG/CR-0150 Vol. 2, Oak Ridge National Laboratory, Oak Ridge, Tennessee, 1979.

Du80 Dunning, D.E. Jr., Leggett, R.W., and Yalcintas, M.G., "A Combined Methodology for Estimating Dose Rates and Health Effects from Exposure to Radioactive Pollutants," ORNL/TM-7105, 1980.

Du81 Dunning, D.E. and Schwartz, G., "Variability of Human Thyroid Characteristics and Estimates of Dose from Ingested ^{131}I", Health Phys., 40(5):661-675, 1981.

EPA77 U.S. Environmental Protection Agency, Proposed Guidance in Dose Limits for Persons Exposed to Transuranium Elements in the General Environment, EPA 520/4-77-016, 1977.

Fi35 Findeisen, W., Uber das Absetzen Kleiner in der Luft Suspendierten Teilchen in der Menschlichen Lunge bei der Atmung, Pflugers Arch. f d ges. Physiol., 236, 367, 1935.

FRC67 Federal Radiation Council, Guidance for the Control of Radiation Hazards in Uranium Mining, FRC Report No. 8, Revised, U.S. Government Printing Office, Washington, D.C., 1967.

Ho75 Holden, W.S., and Marshal, R., "Variations in Bronchial Movement", Clin. Radiol., 26:439-454, 1975.

Hu72 Hughes, J.M.B., Hoppin, F.G., Jr. and Mead, J., "Effect of Lung Inflation on Bronchial Length and Diameter in Excised Lungs", J. Appl. Physiol., 32:25-35, 1972.

Hu73 Hursh, J.B., and Spoor, N.L., "Data on Man", Chapter 4 in Uranium, Plutonium and the Transplutonic Elements, Springer, New York, 1973.

ICRP59 International Commission on Radiological Protection, Report of Committee II on Permissible Dose for Internal Radiation, ICRP Publication 2, Pergamon Press, Oxford, 1959.

ICRP66 ICRP Task Group on Lung Dynamics, "Depositions and Retention Models for Internal Dosimetry of the Human Respiratory Tract", Health Phys., 12(2):173-207, 1966.

ICRP75 International Commission on Radiological Protection, Report on the Task Group on Reference Man, ICRP Publication No. 23, Pergamon Press, Oxford, 1975.

ICRP77 International Commission on Radiological Protection, "Recommendations of the International Commission on Radiological Protection", ICRP Publication 26, Annals of the ICRP, Vol. 1, No. 3, Pergamon Press, Oxford, 1977.

ICRP79 International Commission on Radiological Protection, Limits for Intakes of Radionuclides by Workers, ICRP Publication No. 30, Pergamon Press, Oxford, 1979.

ICRP80 International Commission on Radiological Protection, "Limits for Intakes of Radionuclides by Workers", ICRP Publication 30, Part 2, Annals of the ICRP, Vol. 4 (3/4), Pergamon Press, Oxford, 1980.

ICRP81 International Commission on Radiological Protection, "Limits for Intakes of Radionuclides by Workers", ICRP Publication 30, Part 3, Annals of the ICRP, Vol. 6 (2/3), Pergamon Press, Oxford, 1981.

ICRP84 International Commission on Radiological Protection, "A Compilation of the Major Concepts and Quantities in Use by ICRP", ICRP Publication No. 42, Pergamon Press, Oxford, 1984.

ICRU80 International Commission on Radiation Units and Measurements, ICRU Report No 33, Washington, D.C., 1980.

Ke80 Kerr, G.D., and Eckerman, K.F., Oak Ridge National Laboratory, private communication; see also Abstract P/192 presented at the Annual Meeting of the Health Physics Society, Seattle, Washington, July 20-25, 1980.

Ke80a Kerr., G.D., "A Review of Organ Doses from Isotropic Fields of X-Rays", Health Phys., 39(1):3, 1980.

Ki78a Killough, G.C., Dunning, D.E Jr., Bernard, S.R. and Pleasant, J.C., Estimates of Internal Dose Equivalent to 22 Target Organs for Radionuclides Occurring in Routine Releases from Nuclear Fuel Cycle Facilities, Vol. 1, Report No. ORNL/NUREG/TM-190, Oak Ridge National Laboratory, Tennessee, June 1978.

Ki78b Killough, G.C., and Rohwer, P.S., "A New Look at the Dosimetry of ^{14}C Released to the Atmosphere as Carbon Dioxide", Health Phys., 34(2):141, 1978.

Ko81a Kocher, D.C., and Eckerman, K.F., "Electron Dose-Rate Conversion Factors for External Exposure of the Skin", Health Phys., 40(1):67, 1981.

Ko81b Kocher, D.C., "Dose-Rate Conversion Factors for External Exposure to Photon and Electron Radiation from Radionuclides Occurring in Routine Releases from Nuclear Fuel-Cycle Facilities", Health Phys., 38(4):543-621, 1981.

NAS80 National Academy of Sciences - National Research Council, The Effects on Populations of Exposure to Low Levels of Ionizing Radiation, Report of the Committee on the Biological Effects of Ionizing Radiation (BEIR III), Washington, D.C., 1980.

NCRP71 National Council on Radiation Protection and Measurements, Basic Radiation Protection Criteria, NCRP Report No. 39, Washington, D.C., 1971.

Ne84 Nelson, C.B., and Yang, Y., An Estimation of the Daily Average Food Intake by Age and Sex for Use in Assessing the Radionuclide Intake of Individuals in the General Population, EPA 520/1-84-015, 1984.

NIH85 National Institutes of Health, Report of the National Institutes of Health Ad Hoc Working Group to Develop Radioepidemiological Tables, NIH Publication No. 85-2748, U.S. Government Printing Office, Washington, DC 20402, p 92, 1985.

ORNL81 Oak Ridge National Laboratory, Estimates of Health Risk from Exposure to Radioactive Pollutants, ORNL/RM-7745, Oak Ridge, Tenn., 1981.

ORNL85 Oak Ridge National Laboratory, "Report of Current Work of the Metabolism and Dosimetry Research Group", ORNL/TM-9690, Oak Ridge, Tennessee, 1985.

Ph85 Phalen, R.F., Oldham, M.J., Beaucage, C.B., Crocker, T.T., and Mortensen, J.D., Postnatal Enlargement of Human Tracheobronchial Airways and Implications for Particle Deposition, Anat. Rec. 212: 368, 1985.

Ro58 Rosenberg, G., "Biologic Half-life of ^{131}I in the Thyroid of Healthy Males", J. Clin. Endocrinol. Metab., 18, 516-521, 1958.

Sc82 Schwarz, G., and Dunning, Jr., D.E., Imprecision in Estimates of Dose from Ingested Cs-137 due to Variability in Human Biological Characteristics, Health Phys. 43, 631-645, 1982.

Sn74 Snyder W.S., Ford, M.R., Warner, G.G., and Watson, S.B., A Tabulation of Dose Equivalent per Microcurie-Day for Source and Target Organs of an Adult for Various Radionuclides, Oak Ridge National Laboratory, ORNL-5000, 1974.

Sp73 Spoor, N.L., and Hursh, J.B., "Protection Criteria", Chapter 5 in Uranium, Plutonium and the Transplutonic Elements, Springer, New York, 1973.

Su81 Sullivan, R.E., Nelson, N.S., Ellett, W.H., Dunning, D.E. Jr., Leggett, R.W., Yalcintas, M.G. and Eckerman, K.F., Estimates of Health Risk from Exposure to Radioactive Pollutants, Report No. ORNL/TM-7745, Oak Ridge National Laboratory, Oak Ridge, Tennessee, 1981.

Th77 Thorne, M.D., "Aspects of the Dosimetry of Alpha-Emitting Radionuclides in Bone with Particular Emphasis on ^{226}Ra and ^{239}Pu", Phys. Med. Biol., 22:36-46, 1977.

Th78 Thurlbeck, W.M. "Miscellany", 287-315 in The Lung: Structure Function and Disease, Thurlbeck, W.M. and Abell, M.R., editors, The Williams and Wilkins Co., Baltimore, Maryland, 1978.

Tr66 Trubey, D.K., A Survey of Empirical Functions Used to Fit Gamma-Ray Buildup Factors, Oak Ridge National Laboratory Rep., ORNL-RSIC-10, 1966.

6. ESTIMATING THE RISK OF HEALTH EFFECTS RESULTING FROM EXPOSURE TO LOW LEVELS OF IONIZING RADIATION

6.1 INTRODUCTION

This chapter describes how EPA estimates the risk of fatal cancer, serious genetic effects, and other detrimental health effects caused by exposure to low levels of ionizing radiation.

Ionizing radiation refers to radiation that strips electrons from atoms in a medium through which it passes. The highly reactive electrons and ions created by this process in a living cell can produce, through a series of chemical reactions, permanent changes (mutations) in the cell's genetic material, the DNA. These may result in cell death or in an abnormally functioning cell. A mutation in a germ cell (sperm or ovum) may be transmitted to an offspring and be expressed as a genetic defect in that offspring or in an individual of a subsequent generation; such a defect is commonly referred to as a genetic effect. There is also strong evidence that the induction of a mutation by ionizing radiation in a non-germ (somatic) cell can serve as a step in the development of a cancer. Finally, mutational or other events, including possible cell killing, produced by ionizing radiation in rapidly growing and differentiating tissues of an embryo or fetus can give rise to birth defects; these are referred to as teratological effects. At acute doses above about 25 rads, radiation induces other deleterious effects in man; however, for the low doses and dose rates of interest in this document, only those three kinds of effects referred to above are thought to be significant.

Most important from the standpoint of the total societal risk from exposures to low-level ionizing radiation are the risks of cancer and genetic mutations. Consistent with our current understanding of their origins in terms of DNA damage, these are believed to be stochastic effects; i.e., the probability (risk) of these effects increases with the absorbed dose of radiation, but the severity of the effects is independent of dose. For neither induction of cancer nor genetic effects, moreover, is there any convincing evidence for a "threshold," i.e., some dose level below which the risk is zero. Hence, so far as is known, any dose of ionizing radiation, no matter how small, might give rise to a cancer or to a genetic effect in future generations. Conversely, there is no way to be certain that a given dose of radiation, no matter how large, has caused an observed cancer in an individual or will cause one in the future.

Beginning nearly with the discovery of x-rays in 1895 but especially since World War II, an enormous amount of research has been conducted into the biological effects of ionizing radiation. This research continues at the level of the molecule, the cell, the tissue, the whole laboratory animal, and man. There are two fundamental aspects to most of this work:

1. Estimating the radiation dose to a target (cell, tissue, etc.). This aspect (dosimetry), which may involve consideration of physiological, metabolic, and other factors, is discussed more fully in Chapter 5.

2. Measuring the number of effects of a given type associated with a certain dose (or exposure).

For the purpose of assessing the risk to man from exposures to ionizing radiation, the most important information comes from human epidemiological studies in which the number of health effects observed in an irradiated population is compared to that in an unirradiated control population. The human epidemiological data regarding radiation-induced cancer are extensive. As a result, the risk can be estimated to within an order of magnitude with a high degree of confidence. Perhaps for only one other carcinogen - tobacco smoke - is it possible to estimate risks more reliably.

Nevertheless, there are gaps in the human data on radiation risks. No clear-cut evidence of excess genetic effects has been found in irradiated human populations, for example, probably due to the limited numbers in the exposed cohort providing inadequate power to detect a dose-response. Likewise, no statistically significant excess of cancers has been demonstrated below about 5 rads, the dose range of interest from the standpoint of environmental exposures. Since the epidemiological data are incomplete in many respects, risk assessors must rely on mathematical models to estimate the risk from exposures to low-level ionizing radiation. The choice of models, of necessity, involves subjective judgments but should be based on all relevant sources of data collected by both laboratory scientists and epidemiologists. Thus, radiation risk assessment is a process that continues to evolve as new scientific information becomes available.

The EPA estimates of cancer and genetic risks used here are based largely on the results of a National Academy of Sciences (NAS) study as given in the BEIR III report (NAS80). The study assessed radiation risks at low exposure levels. As phrased by the President of the Academy, "We believe that the report will be helpful to the EPA and other agencies as they reassess radiation protection standards. It provides the scientific bases upon which standards may be decided after nonscientific social values have been taken into account."

In this discussion, the various assumptions made in calculating radiation risks based on the 1980 NAS report are outlined, and these risk estimates are compared with those prepared by other scientific groups, such as the 1972 NAS BEIR Committee (NAS72), the United Nations Scientific Committee on the Effects of Atomic Radiation (UNSCEAR77, 82, 86, 88), and the National Radiological Protection Board of the United Kingdom (St88). Because information on radiation risks is incomplete,

estimates of risk based on the various models may not be highly accurate. This discussion identifies some of the deficiencies in the available data base and points out possible sources of bias in current risk estimates. Nevertheless, the risk estimates made by EPA are believed to be reasonable in light of current evidence.

Sections 6.2 to 6.2.6 consider the cancer risk resulting from whole-body exposure to low-LET (see Chapter 5) radiation, i.e., sparsely ionizing radiation like the energetic electrons produced by x-rays or gamma rays. Environmental contamination by radioactive materials also leads to the ingestion or inhalation of the material and subsequent concentration of the radioactivity in selected body organs. Therefore, the cancer risk resulting from low-LET irradiation of specific organs is examined in Sections 6.2.7 to 6.2.9. Sections 6.2.10 to 6.2.12 summarize recent developments in radiation risk estimation and discuss the uncertainties in the estimates.

Organ doses can also result from high-LET radiation, such as that associated with alpha particles. The cancer risks when high-LET radiation is distributed more or less uniformly within a body organ is the third situation considered (Section 6.3). Because densely ionizing alpha particles have a very short range in tissue, there are exposure situations where the dose distribution to particular organs is extremely nonuniform. An example is the case of inhaled radon progeny, Po-218, Pb-214, and Po-214. For these radionuclides, cancer risk estimates are based on the amount of radon progeny inhaled rather than the estimated dose, which is highly nonuniform and cannot be well quantified. Therefore, risk estimates of radon exposure are examined separately (Section 6.4).

Section 6.5 reviews and quantifies the risk of deleterious genetic effects from radiation and the effects of exposure <u>in utero</u> on the developing fetus. Finally, in Section 6.6, cancer and genetic risks from background radiation are calculated using the models described in this chapter.

6.2 CANCER RISK ESTIMATES FOR LOW-LET RADIATION

6.2.1 <u>Basis for Risk Estimates</u>

There are extensive human epidemiological data upon which to base risk estimates for radiation-induced cancers. Most of the observations of radiation-induced carcinogenesis in humans are of groups exposed to low-LET radiations. These groups include the Japanese A-bomb survivors and medical patients treated with diagnostic or therapeutic radiation, most notably for ankylosing spondylitis in England from 1935 to 1954 (Sm78). Comprehensive reviews of these and other data on the carcinogenic effects of human exposures are available (UNSCEAR77, NAS80).

The most important source of epidemiological data on radiogenic cancer is the population of Japanese A-bomb survivors. The A-bomb survivors have been studied for more than 38 years, and most of them (the Life Span Study Sample) have been followed since 1950 in a carefully planned and monitored epidemiological survey (Ka82, Wa83). They are the largest group that has been studied, and they provide the most detailed information on the response pattern for organs, by age and sex, over a wide range of doses of low-LET radiation. Unfortunately, the 1980 BEIR Committee's analysis of the A-bomb survivor data collected up to 1974 was prepared before bias in the dose estimates for the survivors (the tentative 1965 dose estimates, T65) became widely recognized (Lo81). It is now clear that the T65 dose equivalents to organs tended, on average, to be overestimated (Bo82, RERF83,84) so that the BEIR Committee's estimates of the risk per unit dose are likely to be too low. A new dosimetry system, termed the Dosimetry System 1986 (DS86), is now nearly complete, and preliminary analyses of the risk based on DS86 have been published (Pr87,88; Sh87).

At present, the "BEIR V Committee" of the National Academy of Sciences is preparing a report on radiation risks in light of DS86 and other new information. A detailed reevaluation of EPA's current risk estimates is indicated when this report is issued. A brief discussion of the new dosimetry and its likely effect on risk estimates is included.

To derive risk estimates for environmental exposures of the general U.S. population from epidemiological studies of irradiated populations requires some extrapolation. First, much of the useful epidemiological data pertain to acute doses of 50 rad or higher, whereas we are concerned with small chronic doses incremental to the natural background level of about 100 mrad/year. Second, epidemiological follow-up of the irradiated study cohorts is incomplete; hence, obtaining lifetime risk estimates involves some projection of risk beyond the period of follow-up. Third, an extrapolation must be made from a study population to the U.S. population. In general, these populations will differ in various respects, for example, with respect to organ-specific, base-line cancer rates.

Data pertaining to each of these three extrapolations exist, but in no case are they definitive. Hence, uncertainty in our risk estimates is associated with each of them. These uncertainties are in addition to statistical uncertainties in the epidemiological data (sampling variations) and errors in dose determinations. Generally speaking, it is the former, modeling uncertainties, which are more important.

6.2.2 Dose Response Functions

Radiogenic cancers in humans have been observed, for the most part, only following doses of ionizing radiation that are

relatively high compared to those likely to result from a combination of background radiation and environmental contamination from controllable sources of radiation. Therefore, a dose response model must be chosen to allow extrapolation from the number of radiogenic cancers observed at high doses to the number of cancers at low doses resulting from all causes including background radiation.

The range of extrapolation is not the same for all kinds of cancer because it depends upon the radiosensitivity of a particular tissue. For example, the most probable radiogenic cancer for women is breast cancer. The incidence of radiogenic breast cancer does not seem to diminish when the dose is protracted over a long period of time. For example, the number of excess cancers per unit dose among Japanese women, who received acute doses, is about the same per unit dose as women exposed to small periodic doses of x-rays over many years. If this is actually the case, background radiation is as carcinogenic per unit dose for breast tissue as the acute exposures from A-bomb gamma radiation.

Moreover, the female A-bomb survivors show an excess of breast cancer at doses below 20 rads which is linearly proportional to that observed at several hundred rads (To84). (Evidence of a nonlinear dose response relationship for induction of breast cancer has been obtained in a study of Canadian fluoroscopy patients, but only at doses above about 500 rads (Ho84). Women in their 40s, the youngest age group in which breast cancer is common, have received about 4 rads of whole-body low-LET background radiation and usually some additional dose incurred for diagnostic medical purposes. Therefore, for this cancer, the difference between the lowest dose at which radiogenic cancers are observed, less than 20 rads, and the dose resulting from background radiation is less than a factor of 5, not several orders of magnitude as is sometimes claimed. Based on data from irradiated tinea capitis patients, induction of thyroid cancer also seems to be linear with doses down to 10 rads or lower (NCRP85). However, for most other cancers, a statistically significant excess has not been observed at doses below 50 rads of low-LET radiation. Therefore, the range of dose and dose rate extrapolation is often large.

The 1980 NAS report (NAS80) examined three dose response functions in detail: (1) linear, in which the number of effects (risk) is directly proportional to dose at all doses; (2) linear-quadratic, in which risk is very nearly proportional to dose at very low doses and proportional to the square of the dose at high doses; and (3) quadratic, where the risk varies as the square of the dose at all dose levels.

The 1980 NAS BEIR Committee considered only the Japanese mortality data in its analysis of possible dose response functions (NAS80). Based on the T65 dose estimates, this Committee concluded that the excess mortality from solid cancers

and leukemia among the A-bomb survivors is compatible with either a linear or linear-quadratic dose response to the low-LET radiation component and a linear response to the high-LET neutron component (NAS80). Although the 1980 BEIR report indicated risk estimates for low-LET radiation based on a linear-quadratic response were "preferred" by most of the scientists who prepared that report, opinion was not unanimous, and the subsequent reassessment of the A-bomb dose weakens the Committee's conclusion. The Committee's analysis of dose response functions was based on the assumption that most of the observed excess leukemia and solid cancers among survivors in Hiroshima resulted from neutrons (see Tables V-13, A-7, Equations V-10, V-11 in NAS80). Current evidence, however, is conclusive that neutrons were only a minor component of the dose among all but a few survivors in both Hiroshima and Nagasaki (Bo82; RERF83, 84; Pr87; Sh87). Therefore, it is likely that most of the response attributed to neutrons was caused by the gamma dose, not the dose from neutrons.

Under the revised DS86 dosimetry, the A-bomb survivor data is more consistent with a linear dose response than under T65. Indeed, the linear coefficient obtained by fitting a linear-quadratic function to the data for either leukemia or solid tumors differs only slightly from the respective proportionality constant obtained by fitting a simple linear function (Sh88). Thus, the linear and linear-quadratic functions derived from statistical fits to the Japanese DS86 data yield very similar predictions at low doses. Other human data, particularly that relating to induction of breast cancer (NAS80, NIH85), also lend support to a linear dose response for radiogenic human cancers.

On the other hand, there is extensive laboratory evidence on irradiated animals and cellular preparations which indicates that the effectiveness of low-LET radiation is substantially reduced at low doses and low dose rates. Guided by those observations, as well as by the Japanese data interpreted according to the T65 dosimetry system, the BEIR III committee expressed preference for a linear-quadratic dose response model for low-LET radiations.

For low-LET radiations, the BEIR III Committee preferred the <u>linear-quadratic dose response</u> model. In this model, the risk from an acute dose, D, of low-LET radiation is assumed to be of the form $\alpha D + \beta D^2$. The BEIR III Committee assumed that the linear and quadratic terms were equal at 116 rads, leading to a linear coefficient α, which was about a factor of 2.5 times lower than the coefficient obtained from the linear model (NAS80). At low doses, the quadratic term becomes negligible; at chronic low-dose rates it is ignored, for reasons discussed below. For environmental exposures, therefore, risk estimates based on the BEIR III linear-quadratic dose response model are only about 40 percent of those based on the BEIR III linear model.

Building on earlier work by Lea (Lea62), a theoretical basis for the linear-quadratic dose response model has been put forth by Kellerer and Rossi (Ke72). In this theory of "dual radiation action," events leading to "lesions" (i.e., permanent changes) in cellular DNA require the formation of interacting pairs of "sublesions." The interacting pairs can be produced by a single traversing particle, or track, or by two separate tracks, giving rise, respectively, to a linear and quadratic term in the dose response relationship. According to the theory, a sublesion may be repaired before it can interact to form a lesion, the probability of such repair increasing with time. Consequently, as dose rate is reduced, the formation of lesions from sublesions caused by separate tracks becomes less important, and the magnitude of the D^2 term diminishes. Hence, the theory predicts that at sufficiently low doses or dose rates, the response should be a linear function of dose. Moreover, the constant of proportionality is the same in both cases: i.e., α.

Results of many animal and cellular experiments are qualitatively consistent with the theory: low-LET radiation often seems to have a reduced effectiveness per unit dose at low dose rates (NCRP80). However, it is usually not possible from the data to verify that the dose response curve has the linear-quadratic form. Another success of the dual action theory has been in explaining observed differences between the effects of low-LET and high-LET radiations. In this view, the densely ionizing nature of the latter results in a much greater production of interacting pairs of sublesions by single tracks, leading in turn to higher relative biological effectiveness at low doses and a linear dose response relationship for high-LET radiation (except for possible cell-killing effects).

The dual action theory has nevertheless been challenged on experimental grounds, and observed variations in response with dose, dose rate (see below), and LET can also be explained in terms of a theory involving only single lesions and a "saturable" repair mechanism that decreases in effectiveness at high dose rates on the microscopic scale (To65, Go82). One property of such a theory is that the effectiveness of repair, and therefore the shape of the dose response curve, can in principle vary substantially with cell type and species. Hence, results obtained on laboratory animals would not necessarily be entirely applicable to people.

The quadratic model was put forward in the BEIR III Report, in large part, to account for observed differences in solid tumor induction between Hiroshima and Nagasaki. In Hiroshima, the dose-response appeared linear, but in Nagasaki it appeared quadratic. Rossi suggested that the cancers in Hiroshima were mostly due to neutron doses, while in Nagasaki neutrons were largely absent, so the observed quadratic dose-response there reflected the "true" response to gamma rays (NAS80). With the revisions in A-bomb dosimetry, this rationale is lost.

Preliminary analyses based on DS86 dosimetry indicate that the quadratic model generally provides a poorer fit to the data than do the other two models (Sh88). Some laboratory evidence also suggests that the risk in humans may increase linearly with dose at low doses (Gr85). Thus, though a quadratic dose-response at low doses (or even a threshold) cannot now be definitively ruled out, EPA does not consider such models suitable for radiation risk assessment.

Finally, "supralinear models," in which the risk coefficient decreases with increasing dose (downward bending, or convex, dose response curve) should be mentioned. Such models imply that the risk at low doses would actually be greater than predicted by linear interpolation from higher doses. The evidence from radiation biology investigations, at the cellular as well as the whole animal level, indicates that the dose response curve for induction of mutations or cancer by low-LET radiation is either linear or concave upward for doses to mammalian systems below about 250 rads (NCRP80). Somewhere above this point, the dose response curve often begins to bend over: this is commonly attributed to "cell-killing." The A-bomb survivor data, upon which most of these risk estimates depend, is dominated by individuals receiving about 250 rads or less. Consequently, the cell-killing phenomenon should not produce a substantial underestimate of the risk at low doses.

Noting that human beings, in contrast to pure strains of laboratory animals, may be highly heterogeneous with respect to radiation sensitivity, Baum (Ba73) proposed an alternative mechanism by which a convex dose response relationship could arise. He pointed out that sensitive subgroups may exist in the population who are at very high risk from radiation. The result could be a steep upward slope in the response at low doses, predominantly reflecting the elevated risk to members of these subgroups, but a decreasing slope at higher doses as the risk to these highly sensitive individuals approaches unity.

Based on current evidence, however, it seems unlikely that the effect postulated by Baum would lead to substantial overestimation of the risk at low doses. While there may indeed be small subgroups at very high risk, it is difficult to reconcile the A-bomb survivor data with a strongly convex dose response relationship. For example, if most of the leukemias found among the cohort receiving about 200 rads or more in fact arose from subgroups whose risk saturated below 200 rads, then many more leukemias ought to have occurred in lower dose cohorts than were actually observed. The U.S. population, it could be argued, may be more heterogeneous with respect to radiation sensitivity than the Japanese. The risk of radiation-induced breast cancer appears, however, to be similar in the two populations, so it is difficult to see how the size of the hypothetical sensitive group could be large enough in the former to alter the conclusion reached above. The linear dose-response

relationship seen for radiogenic breast cancer in several populations (NIH85) further argues against Baum's hypothesis.

6.2.3 The Possible Effects of Dose Rate on Radiocarcinogenesis

The BEIR III Committee limited its risk estimates to a minimum dose rate of 1 rad per year and stated that it "does not know if dose rates of gamma rays and x-rays of about 100 mrad/yr are detrimental to man." At dose rates comparable to the background everyone receives from naturally occurring radioactive materials, a considerable body of scientific opinion holds that the effects of radiation are reduced compared to high dose rates. NCRP Committee 40 has suggested that carcinogenic effects of low-LET radiations may be a factor of from 2 to 10 times less per unit dose for small doses and dose rates than have been observed at high doses and dose rates (NCRP80).

The low dose and low dose rate effectiveness factors estimated by NCRP Committee 40 are based on its analysis of a large body of plant and animal data that showed reduced effects at low doses for a number of biological endpoints, including radiogenic cancer in animals, chiefly rodents. However, no data for cancer in humans confirm these findings; indeed, human studies where there are sufficient data to develop a dose-response function for organ exposure seem to contradict them. Highly fractionated small doses to human breast tissue are apparently as carcinogenic as large acute doses (NAS80, La80). Small acute doses (less than 10 rads) to the thyroid have been found to be as effective per rad as much larger doses in initiating thyroid cancer (UNSCEAR77, NAS80). Also relevant in this connection, perhaps, is the finding that a radiation-induced mutation increased linearly with dose, and independently of dose rate, in human cells but not in rodent cells (Gr85).

While none of these examples is persuasive by itself, collectively they indicate that it may not be prudent to assume that all kinds of cancers are reduced at low dose rates and/or low doses. However, it may be overly conservative[1] to estimate the risk of all cancers on the basis of the linearity observed for breast and thyroid cancer. The ICRP and UNSCEAR have used a dose rate effectiveness factor (DREF) of about 2.5 to estimate the risks from occupational (ICRP77) and environmental exposures (UNSCEAR77). That choice of a DREF is fully consistent with and equivalent to the reduction of risk at low doses obtained by substituting the BEIR III linear-quadratic response model for their linear model (see above). Therefore, use of both a DREF

---

[1] Risk assessments require choosing among alternative assumptions, none of which can be definitively shown to be more accurate than the others. A conservative choice, in this connection, is one leading to higher estimates of risk.

and a linear-quadratic model for risk estimation in the low-dose region is inappropriate (NCRP80).

6.2.4 Risk Projection Models

None of the exposed populations have been observed long enough to assess the full effects of their exposures if, as currently thought, most radiogenic cancers occur throughout an exposed person's lifetime (NAS80). Therefore, another major choice that must be made in assessing the lifetime cancer risk due to radiation is to select a risk projection model to estimate the risk for a longer period of time than currently available observational data will allow.

To estimate the risk of radiation exposure that is beyond the years of observation, either a relative risk or an absolute risk projection model (or suitable variations) may be used. These models are described at length in Chapter 4 of the 1980 NAS report (NAS80). The relative risk projection model projects the currently observed percentage increase in annual cancer risk per unit dose into future years, i.e., the increase is proportional to the underlying (baseline) risk. An absolute risk model projects the average annual number of excess cancers per unit dose into future years at risk, independent of the baseline risk.

Because the underlying risk of most types of cancer increases rapidly with age, the relative risk model predicts a larger probability of excess cancer toward the end of a person's lifetime. In contrast, the absolute risk model predicts a constant incidence of excess cancer across time. Therefore, given the incomplete data and less than lifetime follow-up, a relative risk model projects a somewhat greater total lifetime cancer risk than that estimated using an absolute risk model.

Neither the NAS BEIR Committee nor other scientific groups (e.g., UNSCEAR) have concluded which projection model is the more appropriate choice for most radiogenic cancers. However, recent evidence favors the relative risk projection model for most solid cancers. As pointed out by the 1980 NAS BEIR Committee:

> If the relative-risk model applies, then the age of the exposed groups, both at the time of exposure and as they move through life, becomes very important. There is now considerable evidence in nearly all the adult human populations studied that persons irradiated at higher ages have, in general, a greater excess risk of cancer than those irradiated at lower ages, or at least they develop cancer sooner. Furthermore, if they are irradiated at a particular age, the excess risk tends to rise pari passu [at equal pace] with the risk of the population at large. In other words, the relative-risk model with respect to cancer susceptibility at least as a function of age, evidently applies to some kinds

000120

of cancer that have been observed to result from radiation exposure. (NAS80, p.33)

This observation is confirmed by the Ninth A-bomb Survivor Life Span Study, published two years after the 1980 Academy report. This latest report indicates that, for solid cancers, relative risks have continued to remain constant in recent years, while absolute risks have increased substantially (Ka82). Smith and Doll (Sm78) have reached similar conclusions on the trend in excess cancer with time among the irradiated spondylitic patients. More recent analysis of the spondylitic data does show evidence of a fall-off in relative risk after 25 years post-exposure, but the decrease is not yet statistically significant (Da86).

Although considerable weight should be given to the relative risk model for most solid cancers (see below), the model does not necessarily give an accurate projection of lifetime risk. The mix of tumor types varies with age so that the relative frequency of some common radiogenic tumors, such as thyroid cancer, decreases for older ages. Land has pointed out that this may result in overestimates of the lifetime risks when they are based on a projection model using relative risks (La83). While this may turn out to be true for estimates of cancer incidence that include cancers less likely to be fatal, e.g., thyroid, it may not be very important in estimating the lifetime risk of fatal cancers, since the incidence of most of the common fatal cancers, e.g., breast and lung cancers, increases with age.

Leukemia and bone cancer are exceptions to the general validity of a lifetime expression period for radiogenic cancers. Most of the leukemia risk has apparently already been expressed in both the A-bomb survivors and the spondylitics (Ka82, Sm78). Similarly, bone sarcoma from acute exposure appears to have a limited expression period (NAS80, Ma83). For these diseases, the BEIR III Committee believed that an absolute risk projection model with a limited expression period is adequate for estimating lifetime risk (NAS80).

Note that, unlike the NAS BEIR I report (NAS72), the BEIR III Committee's relative and absolute risk models are age-dependent; that is, the risk coefficient changes, depending on the age of the exposed persons. Observational data on how cancer risk resulting from radiation changes with age are sparse, particularly so in the case of childhood exposures. Nevertheless, the explicit consideration of the variation in radiosensitivity with age at exposure is a significant improvement in methodology. It is important to differentiate between age sensitivity at exposure and the age dependence of cancer expression. In general, people seem to be most sensitive to radiation when they are young. In contrast, most radiogenic cancers seem to occur late in life, much like cancers resulting from other causes. In this chapter, lifetime cancer risk estimates for a lifetime exposure of equal annual doses are

presented. However, it is important to note that the calculated lifetime risk of developing a fatal cancer from a single year of exposure varies with the age of the recipient at the time of exposure.

6.2.5 EPA Assumptions about Cancer Risks Resulting from Low-LET Radiation

The EPA estimates of radiation risks, presented in Section 6.2.6, are based on a presumed linear dose response function. Except for leukemia and bone cancer, where a 25-year expression period for radiogenic cancer is used, a lifetime expression period is used, as in the NAS report (NAS80). Because the most recent Life Span Study Report (Ka82) indicates that absolute risks for solid cancers are continuing to increase 33 years after exposure, the 1980 NAS Committee choice of a lifetime expression period appears to be well founded.

To project the number of fatalities resulting from leukemia and bone cancer, EPA uses an absolute risk model, a minimum induction period of 2 years, and a 25-year expression period. To estimate the number of fatalities resulting from other cancers, EPA has used a relative risk projection model (EPA84), a 10-year minimum induction period, and the remaining balance of an exposed person's lifetime as the expression period.

6.2.6 Methodology for Assessing the Risk of Radiogenic Cancer

EPA uses a life table analysis to estimate the number of fatal radiogenic cancers in an exposed population of 100,000 persons. This analysis considers not only death due to radiogenic cancer, but also the probabilities of other competing causes of death which are, of course, much larger and vary considerably with age (Bu81, Co78). Basically, it calculates for ages 0 to 110 the risk of death due to all causes by applying the 1970 mortality data from the National Center for Health Statistics (NCHS75) to a cohort of 100,000 persons. Additional details of the life table analysis are provided in Appendix B. It should be noted that a life table analysis is required to use the age-dependent risk coefficients in the BEIR III report. For relative risk estimates, EPA has used age-specific cancer mortality data also provided by NCHS (NCHS73). The EPA computer program used for the life table analysis was furnished to the NAS BEIR III Committee by EPA and used by the Committee to prepare its risk estimates. Therefore, the population base and calculations should be essentially the same in both the NAS and EPA analyses.

Both absolute and relative risk models have been considered to project the observed risks of most solid radiogenic cancers beyond the period of current observation. The range of estimated fatal cancers resulting from the choice of a particular projection model and its internal assumptions is about a factor of 3. Although the relative risk model has been tested in some

detail only for lung and breast cancer (La78), based on current evidence, it appears to be the better projection model for solid cancers. Therefore, it has been adopted for risk estimates in this report. Previously, EPA used an average of the risks calculated by the absolute and relative risk projection models (EPA84).

To estimate the cancer risk from low-LET, whole-body, lifetime exposure, the analysis uses relative risk projections (the BEIR III L-L model) for solid cancers and the absolute risk projection for leukemia and bone cancer (the BEIR III L-L model). Since the expression period for leukemia and bone cancer is less than the follow-up period, the same risk values would be calculated for these cancers using either projection method. For a dose to the whole body, this procedure yields about 400 fatalities per million person-rad (for the BEIR III linear-quadratic model, a low-LET whole-body dose would yield an estimated lifetime risk of about 160 fatalities per million person-rad).

BEIR III also presented estimates of excess soft tissue cancer incidence risk coefficients for specific sites, as a function of age at exposure, in its Table V-14. By summing the site-specific risks, it then arrived at an estimate for the whole-body risk of cancer incidence (other than leukemia and bone cancer) as given in Table V-30. Finally, by using the weighted incidence/mortality ratios given in Table V-15 of the same report (NAS80), the results in Table V-30 can be expressed in terms of mortality to yield (for lifetime exposure) a risk estimate of about 242 and 776 cancer fatalities per 10^6 person-rad, depending on whether an absolute or a relative risk projection model, respectively, is used to estimate lifetime risk. These values are about 1.7 and 2.1 times their counterparts for the BEIR III L-L model and 4.2 and 5.2 times the LQ-L values. These models all presume a uniform dose to all tissues at risk in the body. In practice, such uniform whole-body exposures seldom occur, particularly for ingested or inhaled radioactivity. The next section describes how this risk estimate is apportioned for whole-body exposure when considering the risks following the exposure of specific organs.

6.2.7 Organ Risks

For most sources of environmental contamination, inhalation and ingestion of radioactivity are more common than external exposure. In many cases, depending on the chemical and physical characteristics of the radioactive material, inhalation and ingestion result in a nonuniform distribution of radioactive materials within the body so that some organ systems receive much higher doses than others. For example, since iodine isotopes concentrate preferentially in the thyroid gland, the dose to this organ can be orders of magnitude larger than the average dose to the body.

To determine the probability that fatal cancer occurs at a particular site, EPA has performed life table analyses for each cancer type using the information on cancer incidence and mortality in NAS80. NAS80 published incidence risk coefficients (NAS80 Table V-14) and mortality to incidence ratios (NAS80 Table V-15). The data in Tables 6-1 and 6-2 are from these tables with the exception of the mortality to incidence ratios for thyroid and lung cancer. Since not all forms of thyroid cancer can be induced by radiation and since, for those that are, a more reasonable mortality to incidence ratio would be 0.1 (NRC85), EPA has used that value in its calculations. Lung cancer incidence and mortality have both shown an increasing trend between 1970 and 1980. Since incidence leads mortality, an uncorrected mortality to incidence ratio gives a low estimate of the fraction of those persons who, having been diagnosed with lung cancer, will die of that disease. Therefore, a mortality to incidence ratio of 0.94, based on long-term survival studies by the National Cancer Institute for lung cancer (J. Horn, private communication), has been used.

Risk coefficients for a site-specific relative risk model were calculated as follows:

1. Mortality risk coefficients for an absolute risk model were calculated using the data in Tables 6-1 and 6-2.

2. Following the procedure used in NAS80, absolute risks at an absorbed dose rate of 1 mrad/y were calculated for each site for males and females in each age group. A 10-year minimum latency and a 20-year plateau - i.e., a 30-year follow up - was used for these calculations.

3. The relative risk coefficients (1/rad) for each age group providing the same 30-year projected risk were then calculated. Following the NAS80 convention, the values calculated for ages 10-19 were used for ages 0-9. For consistency, this report uses this convention for all cancers including lung and breast, for which the NAS80 absolute risk coefficients are zero in the first decade. For calculating thyroid risks, the relevant age-specific mortality rate was considered to be one-tenth of the corresponding incidence rate.

4. Male and female risks for lifetime expression of risk at 1 mrad/y were then calculated and combined to obtain estimates for the general population.

EPA used the NCHS 1970 life table and mortality data for all these calculations. Male and female cohort results were combined presuming a male:female sex ratio at birth of 1.0511, consistent with the expected lifetimes at birth for the 1970 male, female, and general cohort life tables.

Table 6-1. Site-specific incidence risk coefficients (10^{-6} per rad-y).

Site	Age at Exposure 0-9	10-19	20-34	35-49	50+
Males					
Thyroid	2.20	2.20	2.20	2.20	2.20
Breast	0.00	0.00	0.00	0.00	0.00
Lung	0.00	0.54	2.45	5.10	6.79
Esophagus	0.07	0.07	0.13	0.21	0.56
Stomach	0.40	0.40	0.77	1.27	3.35
Intestine	0.26	0.26	0.52	0.84	2.23
Liver	0.70	0.70	0.70	0.70	0.70
Pancreas	0.24	0.24	0.45	0.75	1.97
Urinary	0.04	0.23	0.50	0.92	1.62
Lymphoma	0.27	0.27	0.27	0.27	0.27
Other	0.62	0.38	1.12	1.40	2.90
All Sites	4.80	5.29	9.11	13.66	22.59
Females					
Thyroid	5.80	5.80	5.80	5.80	5.80
Breast	0.00	7.30	6.60	6.60	6.60
Lung	0.00	0.54	2.45	5.10	6.79
Esophagus	0.07	0.07	0.13	0.21	0.56
Stomach	0.40	0.40	0.77	1.27	3.35
Intestine	0.26	0.26	0.52	0.84	2.23
Liver	0.70	0.70	0.70	0.70	0.70
Pancreas	0.24	0.24	0.45	0.75	1.97
Urinary	0.04	0.23	0.50	0.92	1.62
Lymphoma	0.27	0.27	0.27	0.27	0.27
Other	0.62	0.38	1.12	1.40	2.90
All Sites	8.40	16.19	19.31	23.86	32.79

Source: NAS80, Table V-14

Table 6-2. Site-specific mortality to incidence risk ratios.

Site	Male	Female
Thyroid	0.10	0.10
Breast	----	0.39
Lung	0.94	0.94
Esophagus	1.00	1.00
Stomach	0.75	0.78
Intestine	0.52	0.55
Liver	1.00	1.00
Pancreas	0.91	0.90
Urinary	0.37	0.46
Lymphoma	0.73	0.75
Other	0.65	0.50

Source: NAS80, Table V-15, except thyroid and lung (see text).

The average risk for a uniform dose to all tissues was calculated to be 542 x 10^{-6}, 806 x 10^{-6}, and 678 x 10^{-6} per rad for males, females, and the general population, respectively.

It is generally accepted that the risk estimates for the individual sites are less certain than are the risk estimates for all sites combined. Table 6-3 summarizes the relative risk calculations for the BEIR III $\overline{L-L}$ model. The calculational procedure was the same as that outlined above.

The risks tabulated in Table 6-3 are slightly different from those in NAS80. These differences reflect a correction in the exposure interval data for each age group and the use of final rather than preliminary 1970 mortality data. NAS80 also combined male and female risk estimates presuming a sex ratio at birth of 1:1, which is not consistent with natality data.

Since the total risk for all sites is considered more certain than the risk for each site individually, the lifetime risks calculated for the $\overline{L-L}$ model have been used as a constraint for the sum of the individual site estimates. The relative risk coefficient for each site shown in Table 6-4 has been calculated by multiplying the coefficient for the unconstrained model for each sex by the quotient of the average risk for all age groups for the $\overline{L-L}$ unconstrained site-specific model. The constrained risk coefficients are about one-half of the unconstrained values.

The L-L absolute risk model coefficients for leukemia and bone cancer are shown in Table 6-5. The risk coefficient for bone was obtained by dividing the value for alpha particles (high-LET) in NAS80 Table A-27 by an RBE of 8 to obtain a low-LET value of 1.25 x 10^{-7} per rad-year. The risk coefficients for leukemia were obtained by subtracting the risk coefficients for

Table 6-3. BEIR III $\overline{L-L}$ model for excess fatal cancers other than leukemia and bone cancer.

Group	Age at Exposure 0-9	10-19	20-34	35-49	50+	All
Risk Coefficients (10^{-6} per rad-y) for Absolute Risk Model*						
Male	1.920	1.457	4.327	5.291	8.808	
Female	2.567	1.955	5.807	7.102	11.823	
Risk Coefficients (10^{-3} per rad) for Relative Risk Model						
Male	4.458	4.458	2.793	1.007	0.861	
Female	4.748	4.748	3.875	1.902	1.586	
General	4.586	4.586	3.322	1.447	1.257	
Cohort Deaths at 10^{-3} rad/y for Relative Risk Model						
Male	.612	.609	.563	.181	.112	2.076
Female	.689	.686	.824	.357	.268	2.823
General	.649	.647	.690	.267	.188	2.440
Risk per Unit Dose (10^{-6} per rad) for Relative Risk Model						
Male	627	629	397	134	56	310
Female	702	703	568	252	101	378
General	664	665	481	193	81	345

* Source: NAS80, Table V-20

Table 6-4. Mortality risk coefficients (10^{-3} per rad) for the constrained relative risk model.

Site	Age at Exposure 0-9	10-19	20-34	35-49	50+
Male					
Thyroid	52.74	52.74	38.00	28.63	22.43
Breast	0.00	0.00	0.00	0.00	0.00
Lung	2.99	2.99	2.15	1.34	1.18
Esophagus	6.15	6.15	1.44	0.71	1.15
Stomach	11.71	11.71	4.20	1.76	1.70
Intestine	3.35	3.35	1.28	0.48	0.46
Liver	120.37	120.37	25.19	7.23	4.24
Pancreas	7.81	7.81	2.49	1.12	1.37
Urinary	4.14	4.14	1.38	0.59	0.39
Lymphoma	4.41	4.41	1.28	0.42	0.21
Other	1.12	1.12	1.02	0.44	0.47
Female					
Thyroid	35.30	35.30	35.96	34.81	29.53
Breast	10.52	10.52	2.80	1.52	1.02
Lung	6.36	6.36	6.27	6.10	6.12
Esophagus	13.31	13.30	3.90	2.31	3.17
Stomach	14.15	14.15	7.08	3.19	2.60
Intestine	2.63	2.63	1.06	0.45	0.42
Liver	142.77	142.77	46.62	16.29	7.80
Pancreas	11.81	11.81	3.61	1.50	1.59
Urinary	8.10	8.10	3.41	1.63	0.96
Lymphoma	6.28	6.28	1.60	0.50	0.25
Other	0.53	0.53	0.47	0.24	0.27
General					
Thyroid	40.01	40.18	36.67	33.15	28.01
Breast	10.57	10.57	2.82	1.54	1.07
Lung	3.61	3.61	2.91	2.19	2.15
Esophagus	8.01	8.01	2.08	1.14	1.77
Stomach	12.63	12.63	5.37	2.34	2.10
Intestine	2.95	2.95	1.16	0.47	0.44
Liver	126.87	126.84	32.42	10.37	5.70
Pancreas	9.66	9.66	3.00	1.30	1.48
Urinary	5.48	5.48	2.08	0.95	0.61
Lymphoma	5.28	5.28	1.43	0.45	0.23
Other	0.76	0.76	0.69	0.32	0.34

000128

Table 6-5. BEIR III L-L model for excess incidence of (and mortality from) leukemia and bone cancer (absolute risk model).

Site	Age at Exposure 0-9	10-19	20-34	35-49	50+	All
Risk Coefficients (10^{-6} per rad-y)*						
Male						
Leukemia	3.852	1.724	2.471	1.796	4.194	
Bone	0.125	0.125	0.125	0.125	0.125	
Female						
Leukemia	2.417	1.067	1.541	1.112	2.635	
Bone	0.125	0.125	0.125	0.125	0.125	
General						
Leukemia	3.147	1.399	2.005	1.439	3.277	
Bone	0.125	0.125	0.125	0.125	0.125	
Cohort Deaths at 10^{-3} rad/y						
Male						
Leukemia	.0923	.0405	.0829	.0508	.0968	.3634
Bone	.0030	.0029	.0042	.0035	.0029	.0165
Total	.0953	.0435	.0871	.0543	.0997	.3799
Female						
Leukemia	.0588	.0257	.0543	.0357	.0932	.2677
Bone	.0030	.0030	.0044	.0040	.0044	.0189
Total	.0618	.0287	.0587	.0398	.0976	.2866
General						
Leukemia	.0760	.0333	.0689	.0435	.0950	.3167
Bone	.0030	.0030	.0043	.0038	.0036	.0177
Total	.0790	.0363	.0732	.0472	.0987	.3344
Risk per Unit Dose (10^{-6} per rad)						
Male						
Leukemia	94.7	41.9	58.5	37.5	48.6	54.2
Bone	3.1	3.0	3.0	2.6	1.4	2.5
Total	97.8	44.9	61.4	40.1	50.1	56.7
Female						
Leukemia	59.9	26.3	37.4	25.3	35.3	35.9
Bone	3.1	3.1	3.0	2.8	1.7	2.5
Total	63.0	29.4	40.4	28.1	36.9	38.4

* Source: NAS80, Table V-17.

Table 6-5. BEIR III L-L model for excess incidence of (and mortality from) leukemia and bone cancer (absolute risk model) (Continued).

Site	Age at Exposure 0-9	10-19	20-34	35-49	50+	All
Risk per Unit Dose (10^{-6} per rad)						
General						
Leukemia	77.7	34.3	48.1	31.4	41.2	44.8
Bone	3.1	3.1	3.0	2.7	1.6	2.5
Total	80.8	37.4	51.1	34.1	42.8	47.3

bone from the risk coefficients for leukemia and bone from NAS80 Table V-17. EPA has followed the BEIR III Committee's practice of using the absolute risk model projections for leukemia and bone cancer with the relative risk projection for all other cancers. Since the expression period for leukemia and bone cancer is 27 years, there is no difference between the number of cancers projected for a 30-year and a lifetime follow-up period.

Table 6-6 shows the average mortality risks per unit absorbed dose for the combined leukemia/bone and constrained relative riskmodels. The risk, in general, decreases with increasing age at exposure. For a constant, uniform absorbed dose rate to all organs and tissues, about 60 percent of the risk is conferred by the exposures in the first 20 years of life.

The mortality to incidence ratios in Table 6-2 were used to convert the mortality risk estimates in Table 6-6 to incidence risk estimates. For leukemia and bone cancer, the incidence risks are considered to be equal as in NAS80. The resultant incidence risks are shown in Table 6-7.

6.2.8 Thyroid Cancer from Iodine-131 and Iodine-129

Iodine-131 has been reported to be only one-tenth as effective as x-rays or gamma rays in inducing thyroid cancer (NAS72, NCRP77, NCRP85). BEIR III reported estimates of factors of 10-80 times reduction for iodine-131 compared to x-rays and noted the estimates were derived primarily from animal experiments (NAS80). However, one study in rats reported that iodine-131 was just as effective as x-rays in inducing thyroid cancer, leading an NRC review group to select one-third as the minimum ratio of iodine-131 to x-ray effects that is compatible with both old and new data (NRC85).

Table 6-6. Site-specific mortality risk per unit dose (1.0E-6 per rad) for combined leukemia-bone and constrained relative risk model.

Site	Age at Exposure 0-9	10-19	20-34	35-49	50+	All
Male						
Leukemia	94.68	41.86	58.46	37.52	48.64	54.19
Bone	3.07	3.04	2.96	2.61	1.45	2.47
Thyroid	8.76	8.25	5.08	2.69	0.80	4.32
Breast	0.00	0.00	0.00	0.00	0.00	0.00
Lung	145.90	146.95	107.22	61.40	22.55	84.21
Esophagus	25.57	25.76	6.13	2.82	2.03	9.91
Stomach	110.95	111.72	40.63	16.4	9.36	46.95
Intestine	53.49	53.83	20.89	7.60	4.30	22.78
Liver	168.01	168.24	35.40	9.48	2.50	58.87
Pancreas	74.36	74.90	24.21	10.34	6.55	30.78
Urinary	40.73	40.99	13.85	5.79	2.22	16.60
Lymphoma	33.43	33.28	9.62	2.88	0.71	12.49
Other	37.48	37.23	33.72	13.09	6.93	22.66
Total	796.43	746.05	358.15	172.65	108.06	366.25
Female						
Leukemia	59.93	26.35	37.39	25.27	35.27	35.86
Bone	3.10	3.09	3.03	2.84	1.67	2.53
Thyroid	15.85	14.54	11.46	7.46	2.24	8.42
Breast	309.33	310.52	81.01	36.93	10.30	107.63
Lung	78.57	78.89	77.09	64.70	24.96	56.72
Esophagus	21.47	21.57	6.32	3.46	2.26	8.33
Stomach	102.64	103.05	51.49	22.38	10.73	45.00
Intestine	57.15	57.38	23.07	9.57	5.01	23.08
Liver	115.94	115.25	36.97	11.95	2.80	40.74
Pancreas	103.00	103.48	31.71	12.70	7.11	38.15
Urinary	46.40	46.54	19.64	9.08	3.06	18.80
Lymphoma	45.71	45.66	11.54	3.35	0.79	15.13
Other	27.69	27.65	24.48	11.27	5.80	16.20
Total	986.78	953.96	415.21	220.95	112.01	416.59
General						
Leukemia	77.69	34.26	48.06	31.39	41.20	44.76
Bone	3.09	3.06	2.99	2.72	1.58	2.50
Thyroid	12.22	11.33	8.23	5.07	1.61	6.43
Breast	151.24	152.03	39.95	18.40	5.75	55.36
Lung	112.98	113.63	92.34	63.00	23.91	70.07
Esophagus	23.56	23.71	6.22	3.14	2.16	9.09
Stomach	106.89	107.48	45.98	19.37	10.13	45.95
Intestine	55.28	55.57	21.96	8.58	4.70	22.94
Liver	142.55	142.30	36.17	10.71	2.67	49.55
Pancreas	88.36	88.89	27.90	11.51	6.87	34.57
Urinary	43.50	43.71	16.70	7.43	2.69	17.73
Lymphoma	39.44	39.34	10.56	3.11	0.76	13.85
Other	32.69	32.54	29.16	12.18	6.30	19.34
Total	889.49	847.84	386.21	196.60	110.32	392.14

Table 6-7. Site-specific incidence risk per unit dose (1.0E-6 per rad) for combined leukemia-bone and constrained relative risk model.

Site	Age at Exposure 0-9	10-19	20-34	35-49	50+	All
Male						
Leukemia	94.68	41.86	58.46	37.52	48.64	54.19
Bone	3.07	3.04	2.96	2.61	1.45	2.47
Thyroid	87.59	82.52	50.84	26.92	8.04	43.23
Breast	0.00	0.00	0.00	0.00	0.00	0.00
Lung	155.21	156.33	114.07	65.31	23.99	89.58
Esophagus	25.57	25.76	6.13	2.82	2.03	9.91
Stomach	147.94	148.97	54.18	21.87	12.48	62.61
Intestine	102.87	103.52	40.17	14.63	8.28	43.81
Liver	168.01	168.24	35.40	9.48	2.50	58.87
Pancreas	81.71	82.31	26.60	11.37	7.20	33.83
Urinary	110.08	110.79	37.44	15.65	6.01	44.87
Lymphoma	45.80	45.58	13.17	3.94	0.98	17.12
Other	57.66	57.27	51.88	20.15	10.65	34.86
Total	1080.20	1026.20	491.27	232.28	132.25	495.35
Female						
Leukemia	59.93	26.35	37.39	25.27	35.27	35.86
Bone	3.10	3.09	3.03	2.84	1.67	2.53
Thyroid	158.45	145.42	114.59	74.60	22.38	84.16
Breast	793.16	796.20	207.73	94.69	26.40	275.97
Lung	83.59	83.93	82.01	68.83	26.56	60.34
Esophagus	21.47	21.57	6.32	3.46	2.26	8.33
Stomach	131.59	132.11	66.01	28.69	13.75	57.70
Intestine	103.90	104.34	41.94	17.40	9.11	41.96
Liver	115.94	115.25	36.97	11.95	2.80	40.74
Pancreas	114.44	114.98	35.23	14.11	7.91	42.39
Urinary	100.88	101.16	42.70	19.74	6.66	40.88
Lymphoma	60.95	60.88	15.38	4.47	1.06	20.18
Other	55.38	55.30	48.97	22.54	11.61	32.40
Total	1802.80	1760.60	738.28	388.58	167.42	743.44
General						
Leukemia	77.69	34.26	48.06	31.39	41.20	44.76
Bone	3.09	3.06	2.99	2.72	1.58	2.50
Thyroid	122.24	113.32	82.26	50.66	16.05	64.28
Breast	387.78	389.82	102.42	47.18	14.74	141.95
Lung	120.19	120.88	98.24	67.02	25.44	74.54
Esophagus	23.56	23.71	6.22	3.14	2.16	9.09
Stomach	139.95	140.71	60.00	25.25	13.20	60.08
Intestine	103.38	103.92	41.03	16.00	8.74	42.86
Liver	142.55	142.30	36.17	10.71	2.67	49.55
Pancreas	97.71	98.30	30.85	12.73	7.60	38.23
Urinary	105.58	106.08	40.02	17.68	6.37	42.82
Lymphoma	53.21	53.07	14.26	4.20	1.02	18.69
Other	56.55	56.31	50.43	21.33	11.19	33.60
Total	1433.50	1385.70	612.96	310.01	151.96	622.96

000132

It would be prudent to use this factor until further information from animal studies or some human data are developed. In this document, EPA has employed a thyroid cancer risk coefficient for internal exposures to iodine-131 and I-129 which is one-third that used for gamma rays or beta radiations from other radionuclides.

6.2.9 Cancer Risks for a Constant Intake Rate

The fatal cancer risks shown in the tables of this chapter presume a lifetime exposure at a constant dose rate. Even for a dosimetric model with age invariant parameters, dose rates vary with time for a constant intake rate. This variation reflects the time-dependent activity levels associated with the retention of the radionuclide in the organs and tissues. The ingrowth of radioactive decay products can also contribute further to the time-dependence of dose rates.

Traditionally, risk estimates for chronic intake of a radionuclide have been determined using a dose commitment model to calculate dose rates following a fixed period (e.g., a 70-year average lifespan). For the purpose of estimating risk, these dose rates are considered to be invariant over the individual's lifetime. This approach is overly conservative for estimating risk for many long-lived radionuclides. Therefore, EPA estimates risks for constant radionuclide intakes by first determining dose rates to each radiosensitive organ or tissue as a function of time. Then these dose rates and the risk models of this chapter are used to calculate lifetime risk based on 1970 life table data. The resulting risks are consistent with both the dosimetric and risk models, and the arbitrary choice of a dose commitment period is avoided.

6.2.10 Effect on Risk Estimates of Recent Information Regarding A-Bomb Survivors

Since publication of the BEIR III report, there has been further epidemiological follow-up of the Japanese A-bomb survivors. As discussed above, the results have lent support to the relative risk projection model for solid tumors, which has been utilized here. The additional data provided by the follow-up reduces statistical uncertainties in the risk coefficients and fills in important gaps pertaining to some organ-specific risks, particularly with respect to childhood irradiation (Pr88).

Subsequent to BEIR III, there has also been a major reassessment of doses assigned to the A-bomb survivors, the effect of which, in general, will be to increase the risk of low-LET radiation calculated according to a particular model.

Investigators from Oak Ridge National Laboratory carried out careful state-of-the art evaluation of the dose to A-bomb survivors in the early 1960s (Au67, Au77). The results of these studies resulted in a "T65" dose being assigned to the dose

(kerma) in free air at the location of each survivor for both gamma rays and neutrons. A major conclusion of the ORNL study was that the mix of gamma ray and neutron radiations was quite different in the two cities where A-bombing occurred. These results indicated that at Hiroshima the neutron dose was more important than the gamma dose when the greater biological efficiency of the high-LET radiations produced by neutrons was taken into account. Conversely, the neutron dose at Nagasaki was shown to be negligible compared to the gamma dose for that range of doses where there were significant numbers of survivors. Therefore, the 1980 BEIR Committee evaluated the cancer risks to the survivors at Hiroshima on the assumption that the combined effects of gamma rays and particularly neutrons caused the observed cancer response.

Serious inadequacies in the T65 dosimetry system were discovered in the late 1970s. A comprehensive reevaluation of the doses to survivors was carried our under the auspices of the U.S.-Japan Joint Committee for Reassessment of Atomic Bomb Dosimetry in Hiroshima and Nagasaki. In 1986, this committee provided results to the Radiation Effects Research Foundation (RERF) from which a revised dosimetry system, termed "DS86," was developed. Although work in the DS86 is largely complete, small adjustments in dose estimates are anticipated over the next few years (Pr87). In addition, about 1,000 survivors from Nagasaki, who were shielded by terrain or were in factories, have so far been excluded from the analysis because of difficulties in estimating their doses. It is anticipated that dose estimates for some of these survivors will be forthcoming in the near future (Pr87).

The major differences between TS65 and DS86 are: (1) the neutron dose in DS86 is decreased to 10 percent of its former value in Hiroshima and 30 percent in Nagasaki (as a result, neutrons now contribute relatively little to the estimated excess of cancers in the two cities); (2) the DS86 free-in-air gamma dose increases somewhat in Hiroshima but decreases in Nagasaki relative to T65; (3) transmission of gamma rays through wooden structures is decreased by about a factor of 2 in DS86; and (4) transmission of gamma rays through the body to internal organs is generally increased, partially nullifying the change associated with the decreased transmission through structures (Pr87, Sh87).

Analysis of the A-bomb survivor data using the DS86 dosimetry is continuing. Preliminary indications are that risk estimates corresponding to a given dose-response model (linear or linear-quadratic) will be increased by more than a factor of 2 as compared to BEIR III estimates. This increase arises not only from changes in dosimetry, but also from further epidemiological follow-up and new statistical procedures employed (Pr87, Pr88). A preliminary estimate of low-LET radiation risk to the Japanese population based on DS86 dosimetry and the linear, relative risk model is 1.2×10^{-3} fatal cancers per rad (Pr88) - approximately 3 times the corresponding BEIR III estimate. Recent publications

000134

by UNSCEAR (UNSCEAR88) and the British NRPB (St88) obtained similar estimates for the Japanese and U.K. populations, respectively.

It appears that either a linear or linear-quadratic dose response is consistent with the survivor data, analyzed according to DS86 (Pr87). However, as noted above, linear and linear-quadratic best fits to the data differ only slightly in their predictions at low doses. It would also appear that the residual difference in risk per unit dose between Hiroshima and Nagasaki is no longer statistically significant under DS86 dosimetry (Sh87).

6.2.11 Comparison of Risk Estimates for Low-LET Radiation

Table 6-8 summarizes various estimates of risk from low level, low-LET exposures of the general population. As discussed above, the highest risk estimates are obtained by assuming a linear dose response (for purposes here, equivalent to a DREF=1.0) and a relative risk projection model. EPA's current risk estimate of 392 x 10^{-6}/rad corresponds to that obtained by the BEIR III committee (NAS80) using these "conservative" assumptions. However, this estimate was not derived from the most recent Japanese data; recent calculations based on similar assumptions but revised data yield about three times higher risk (see Pr88 in Table 6-8). Thus, as illustrated by a comparison with the UNSCEAR88 and St88 entries in Table 6-8, the EPA89 estimate is in good agreement with the new data if one assumes that the risks projected from a linear fit to the epidemiological data should be reduced by a factor of about three when extrapolating to chronic low dose conditions. Such an assumption is reasonable in view of supportive laboratory data and the apparent decreased effectiveness of iodine-131 in causing thyroid cancer in humans relative to X-rays (NCRP77). However, it should be noted that while the current estimate 392 x 10^{-6}/rad is reasonable, and well within the range of uncertainty, it can no longer be regarded as conservative, in the sense of providing an extra margin of public health protection. The EPA plans to reevaluate its risk models, including the choice of DREF, in light of the UNSCEAR88 and NAS BEIR V reports.

It is expected that this review will also lead to revisions in the distribution of fatal cancer risk among organs. To assign organ risks, evidence on the Japanese A-bomb survivors has to be integrated with that from other epidemiological studies. As an indicator of the possible impact that the new Japanese data may have on EPA's organ-specific risk estimates, Table 6-9 compares EPA's current organ risk estimates with those recently published by the NRPB for the general U.K. population (St88), which take into account recent changes in the Japanese data. Two model estimates are presented from the NRPB publication: (a) one based on a linear extrapolation of high dose epidemiological data and (b) one based on an assumed DREF of two for breast cancer induction and three for all other sites. Both sets of model

Table 6.8 Comparison of general population risk estimates for fatal cancers due to low level, whole-body, low-LET radiation.

Source of estimate	Fatalities per 10^6 person-rad	Risk projection model	DREF[a]
NAS72[b]	115	Absolute	1.0
NAS72[b]	568	Relative	1.0
NAS80	158	Absolute	1.0
NAS80	403	Relative[c]	1.0
NAS80	67	Absolute	2.48[d]
NAS80	169	Relative[c]	2.48[d]
EPA84	280	Ave.(Rel.& Abs.)	1.0
EPA89[e]	392	Relative[c]	1.0
UNSCEAR77	75-175	-----	2.5
Pr88[f]	1200	Relative[c]	1.0
UNSCEAR88[f]	110-550	Relative[c]	2-10
St88[f]	450	Relative[c]	3.0[g]

[a] Factor by which risk estimate is reduced from that obtained by linear extrapolation of high dose epidemiological results.

[b] As revised in NAS80.

[c] For all cancers other than leukemia and bone cancer.

[d] Based on comparison of linear coefficients for linear and linear-quadratic models used to calculate radiogenic cancers other than leukemia and bone cancer; the corresponding DREF is 2.26 for these two sites.

[e] Refers to this document.

[f] From analyses of A-bomb survivor data using DS86 dosimetry.

[g] Except breast - a DREF of 2 is assumed for that site.

Table 6-9. Site-specific mortality risk per million person-rad from low level, low-LET radiation exposures of the general population.

Cancer	EPA	NRPB[a]	NRPB[b]
Leukemia	44.8	84	28
Bone	2.5	15	5
Thyroid	6.4 (2.1)[c]	7.5	2.5
Breast	55.4	110	55
Lung	70.1	350	120
Stomach	46.0	73	24
Intestine	22.9	110	37
Liver	49.6	45	15
Pancreas	34.6	---	---
Urinary	17.7	---	---
Other	42.3	500	163
Total	392	1290	450

[a] Relative risk model recommended by authors for use only at high dose rates. Use at low dose rates would be equivalent to adopting a DREF of 1. (St88).

[b] Preferred relative risk model projection for use at low dose rates; assumes DREF=2 for breast and DREF=3 for all other sites.

[c] Value in parentheses represents estimate for important case of iodine-131 (or iodine-129) exposure.

estimates assume a relative risk protection for cancers other than bone cancer and leukemia. Thus the model assumptions underlying the first NRPB set of organ risk estimates closely parallel those employed by EPA. The difference in the risk estimates largely reflect changes in the Japanese data. The second set of NRPB risk estimates, which the authors preferred to use at low environmental doses and dose rates, are, for the most part, in reasonable agreement with EPA's current model estimates (to within about a factor of two).

6.2.12 Sources of Uncertainty in Low-LET Risk Estimates

The most important uncertainties in estimating risk from whole body, low-LET radiation appear to relate to: (1) the extrapolation of risks observed in populations exposed to relatively high doses, delivered acutely, to populations receiving relatively low dose chronic exposures and (2) the projection of risk over a full lifespan - most critically, the extent to which high relative risks seen over a limited follow-up

period among individuals exposed as children carry over into later years of life when baseline cancer incidence rates are high.

Another significant uncertainty relates to the extrapolation of risk estimates from one population to another (e.g., from the Japanese A-bomb survivors to the U.S. general population). This source of uncertainty is regarded as important for estimating risk of radiogenic cancer in specific organs for which the baseline incidence rates differ markedly in the two populations.

In addition to the model uncertainties alluded to above, errors in dosimetry and random statistical variations will contribute to the uncertainty in the risk estimates. The errors in T65 dosimetry were discussed Section 6.2.10. The residual error of DS86 dosimetry is estimated to be a relatively minor contributor to the overall uncertainty (see below). Statistical variability will be most important where relatively few excess cancers have so far been observed: e.g., with respect to specific cancer sites or with respect to childhood irradiation in the A-bomb survivors.

6.2.12.1 Low Dose Extrapolation

Results from animal and cellular studies often show decreasing effects (e.g., cancers, mutations, or transformations) per rad of low-LET radiation at low doses and dose rates. Based on a review of this literature, the National Council on Radiation Projection (NCRP80) has concluded that "linear interpolation from high doses (150 to 350 rads) and dose rates (>5 rads min^{-1}) may overestimate the effects of either low doses (0-20 rads or less) or of any dose delivered at dose rates of 5 rad y^{-1} or less by a factor of two to ten." Judged solely from laboratory experiments, therefore, about a factor of ten reduction from the linear prediction would seem to constitute a plausible lower limit on the effectiveness of low-LET radiation under chronic low dose conditions.

Epidemiological evidence would seem to argue against such a large DREF from human cancer introduction, however. Data on the A-bomb survivors and patients irradiated for medical reasons indicate that excess breast cancer incidence is proportional to dose and independent of dose fractionation (NAS80, NIH85). The evidence on thyroid cancer induction is equivocal: medical x-ray data suggest a linear dose response (NAS80, NIH85); on the other hand, iodine-131 radiation appears to be at least 3 times less effective than an equal dose of x-rays in inducing human thyroid cancer, one plausible explanation for which is a reduced effectiveness at low dose rates (NCRP77).

The BEIR III Committee's analysis of the A-bomb survivor data based on T65 dosimetry, suggested a quadratic component to the dose response function. After removing the estimated neutron-induced leukemia, the Committee's linear-quadratic fit to

the data yielded a linear coefficient that was a factor of 2.3 times lower than the coefficient obtained from a simple linear fit (NAS80). Thus, the analysis suggested a 2.3 times lower risk at low doses (and dose rates) than estimated by linear extrapolation of the high dose data. Results of the curve fitting for solid tumors were too unstable to estimate a shape for the dose response; for simplicity, the Committee assumed that the shape of the linear-quadratic fit for solid tumors was identical to that derived for leukemia. At low doses, the linear-quadratic model predicts about 2.5 times fewer solid tumors than the corresponding linear model. However, the DS86 data appear to be more consistent with a simple linear dose response for both leukemia and solid tumors. Reflecting this finding, low dose extrapolations of the linear and linear-quadratic fits to the DS86 data apparently differ from one another by less than a factor of 2 (Sh88, Pi89). Thus, if one posits a linear-quadratic dose response model, the available human data would suggest that linear extrapolation from high doses and dose rates overestimates risks at low doses and dose rates by about a factor of 2 or less.

6.2.12.2 Time and Age Dependent Factors

Because epidemiological follow-up of exposed population is generally incomplete, a risk projection model must be used in estimating lifetime risks due to a given exposure. For leukemia and bone cancer, where the expression time is limited to 25 years, absolute and relative risk projection models yield the same number of radiogenic cancers. For other cancers, the BEIR III Committee assumed that radiogenic cancers would occur throughout the estimated lifetime. This makes the choice of projection model more critical because the relative risk projection yields estimated lifetime risks 2-3 times larger than an absolute risk projection. Recent follow-up of the A-bomb survivor population strongly suggests that the relative risk projection model better describes the variation risk of solid tumors over time (NIH85). However, there may be some cancers, apart from leukemia and bone cancers, for which the absolute risk projection model is a better approximation. For other cancers, the relative risk may have been roughly constant for the current period of follow-up but may eventually decrease over time. The uncertainty relating to risk projection will naturally decrease with further follow-up of irradiated study cohorts, but in view of the continuing increase in attributable risk with age in the A-bomb survivors, it would appear that the relative risk projection model does not overestimate the lifetime task in the general population by more than about a factor of 2.

Similarly, there is yet insufficient information on radiosensitivity as a function of the age at exposure, particularly on the ultimate effects of exposure during childhood. As the A-bomb survivor population ages, more information will become available on the cancer mortality of persons irradiated when they were young. Recent follow-up

studies support the view that relative risks are highest in those aged 0-9 years at exposure. Full inclusion of the projected effects on this group was a major contributor to the increase in risk found with the recent analysis based on DS86 dosimetry (Pr87, Pr88).

6.2.12.3 Extrapolation of Risk Estimates to U.S. Population

There is also an uncertainty associated with applying the results of an epidemiological study on a population to another population having different demographic characteristics. A typical example is the application of the Japanese data for A-bomb survivors to Western people. Seymour Jablon has called this the "transportation problem," a helpful designation because it is often confused with the risk projection problem described above. However, there is more than a geographic aspect to the "transportation problem." Risk estimates for one sex must sometimes be based on data for the other. In transporting risk estimates from one group to another, one may have to consider habits influencing health status, such as differences between smokers and nonsmokers, as described in Section 6.4 for the case of risk estimated for radon progeny.

The BEIR III Committee addressed this problem in its 1980 report and concluded, based largely on the breast cancer evidence, that the appropriate way to transport the Japanese risk to the U.S. population was to assume that the absolute risk over a given observation period was transferrable but that relative risk was not. Therefore, the Committee calculated what the relative risk would be if the same number of excess cancer deaths was observed in a U.S. population having the same age characteristics as the A-bomb survivors. A constant absolute risk model, as postulated by the Committee, would imply that, whatever the factors are that cause Japanese and U.S. baseline cancer rates to differ, they have no effect on the incidence of radiation-induced cancers; i.e., the effects of radiation and these factors are purely additive.

An alternative approach to the "transportation problem" was taken by the 1972 NAS BEIR-I Committee. This committee assumed relative risks would be the same in the United States and Japan and transferred the observed percentage increase directly to the U.S. population. Since the U.S. and Japanese baseline rates differ drastically with respect to mortality from specific cancers, this approach implies some large differences in the predicted number of specific cancers resulting from a given dose of radiation in the two countries. The most important differences relate to cancers of the breast, lung, and stomach. Baseline rates of breast and lung cancers are higher in the United States by factors of about 4 and 2, respectively, while the risk of stomach cancer is about 8 times higher in Japan (Gi85). As noted above, it appears that the absolute risk should be transported for breast cancer. Evidence is lacking regarding the other cancer sites, however. If lung cancer risk were to be

transported with a relative risk model, retaining the absolute model for other cancers, the estimated risk from a whole-body exposure would increase by about 20 percent; on the other hand, applying the relative risk model to stomach cancer alone would lower the whole-body risk by about 8 percent. Based on these considerations, including the tendency for changes in specific cancers to cancel one another, EPA believes that using the absolute risk "transportation model" is unlikely to cause large errors in the total risk estimate. Thus, in the case of uniform whole-body doses, the amount of uncertainty introduced by transporting cancer risks observed in Japan to the U.S. population appears to be small compared to other sources of uncertainty in this risk assessment.

6.2.12.4 Dosimetry and Sampling Errors

As discussed in Section 6.2.10, there were systematic biases in the T65 dosimetry system for the Japanese A-bomb survivors, leading to a significant downward bias in the estimates of risk due to low-LET radiation. Under DS86 dosimetry, systematic errors are believed to be no more than about 15% (1 SD) (Ka89). Random errors in the individual dose estimates are estimated to be 28% (1 SD), with an overall uncertainty in individual doses of about ± 32% (Ka89). The random errors in dosimetry will tend to cancel, but they are expected to bias the slope of the dose response curve downward, reducing the estimate of risk (Ma59, Da75, Gi84). The magnitude of this bias has been estimated to be roughly 10% (Pi89).

The precision of risk estimates are also limited by statistical fluctuations due to finite sample size. The uncertainty in the low-LET risk coefficient for leukemia or all cancers due to this cause is about ± 20% (90% confidence interval) (Sh89). Uncertainties due to sampling error are larger where data are sparse, e.g. with respect to risks for specific age groups or specific cancer sites (Sh88). Finally, there will be some error in ascertaining cancer cases, most often an under-reporting of cases or mislabeling of cancer type. The latter type of error would not be expected to greatly affect the estimates of whole-body risk from ionizing radiation. The former would tend to bias risk estimates downward somewhat, but it would be difficult to quantify this effect.

6.2.12.5 Summary and Conclusions Regarding Uncertainties in Low-LET Cancer Risk Estimates

Uncertainties in low-LET risk estimates arise both from data uncertainties pertaining to ascertainment of radiation doses and cancer cases and from uncertainties in the proper choice of model assumptions. The data uncertainties include both systematic errors (biases) and random errors. Generally speaking, the modeling uncertainties are larger, but random sampling errors may be a very important contributor to the uncertainty in risk for certain types of radiogenic cancers or for certain irradiated subpopulations.

The EPA central estimate of average lifetime risk, approximately 400 fatal cancers per 10^6 person-rad, is taken from the NAS BEIR III Committee report (NAS80), incorporating the most conservative model assumptions utilized by the Committee, i.e., a linear dose response and age-specific relative risks projected over a lifetime for solid tumors (L-RR model). For reasons discussed above, it would now appear that estimates of average lifetime risk based on the L-RR model assumptions must be revised upwards - to roughly 1,200 fatal cancers/10^6 person-rad. Although further analysis of the A-bomb survivor data may increase this estimate, the conservatism inherent in the model's assumptions supports the view that the 1,200/10^6 value is an upper bound, pending release of the NAS BEIR V report now in preparation.

Animal data would suggest that the linear dose response may overestimate risk by roughly a factor of 3. Likewise, while the epidemiological data clearly indicate an increase in risk with age at expression, the (age-specific) constant relative risk projection may overstate lifetime risk by about a factor of 2. Allowing even for the additional sources of uncertainty discussed above, it would appear that the upper bound (L-RR) model estimate may be high by a factor of 5 to 10. Therefore, as a lower bound estimate of the average lifetime risk, a value which is one-tenth the upper bound, or 120 fatal cancers/10^6 person-rad, has been adopted.

The L-RR model estimate from BEIR III, about 400 fatal cancers/10^6 person-rad, falls near the geometric mean of what tentatively appears to be a reasonable range for the estimate of risk, based on current information. EPA has chosen the BEIR III, L-RR model value as its "central estimate." It should be emphasized that this estimate cannot be regarded as "conservative" in the sense of providing any significant margin of safety with respect to public health protection. The decision by EPA to employ the central estimate of 400 fatalities/10^6 person-rad and a range of 120-1,200 fatalities/10^6 person-rad was reviewed and approved by a special panel set up by the Agency's outside Radiation Advisory Committee and by the Committee itself, as an interim measure for this proposed rulemaking.

000142

The uncertainty in risks for specific cancer sites may be substantially larger than the uncertainty in the whole-body risk. One reason is that the epidemiological data pertaining to some sites may be very sparse. In addition, the uncertainty in projecting risk from one population to another (e.g., Japanese to U.S.) is important at sites for which incidence rates differ markedly between populations.

6.3 FATAL CANCER RISK RESULTING FROM HIGH-LET RADIATION

This section explains how EPA estimates the risk of fatal cancer resulting from exposure to high-LET radiations. Unlike exposures to x-rays and gamma rays where the resultant charged particle flux results in linear energy transfers (LET) of the order of 0.2 to 2 keV per μm in tissue, 5-MeV alpha particles result in energy deposition of more than 100 keV per μm. High-LET radiations have a larger biological effect per unit dose (rad) than low-LET radiations. How much greater depends on the particular biological endpoint being considered. For cell killing and other readily observed endpoints, the relative biological effectiveness (RBE) of high-LET alpha radiations is often 10 or more times greater than low-LET radiations. The RBE may also depend on the dose level; for example, if linear and linear-quadratic dose response functions are appropriate for high- and low-LET irradiations, respectively, then the RBE will decrease with increasing dose.

6.3.1 Quality Factors and RBE for Alpha Particles

For purposes of calculating dose equivalent, each type of biologically important ionizing radiation has been assigned a quality factor, Q, to account for its relative efficiency in producing biological damage. Unlike an RBE value, which is for a specific tissue and well-defined endpoint, a quality factor is based on an overall assessment by radiation protection experts of potential harm of a given radiation relative to x or gamma radiation. In 1977, the ICRP assigned a quality factor of 20 to alpha particle irradiation from radionuclides (ICRP77). However, the appropriateness of this numerical factor for estimating fatal radiogenic cancers is still unclear, particularly for individual sites.

The dose equivalent (in rem) is the absorbed dose (in rad) times the appropriate quality factor for a specified kind of radiation. For the case of internally deposited alpha-particle emitters, the dose equivalent from a one-rad dose is 20 rem. Prior to ICRP Report 26 (ICRP79), the quality factor assigned to alpha particle irradiation was 10. That is, the biological effect from a given dose of alpha particles was estimated to be 10 times that from an acute dose of low-LET x-rays or gamma rays of the same magnitude in rad. The ICRP decision to increase this quality factor to 20 followed from its decision to estimate the risk of low-LET radiations, in occupational situations, on the

assumption that biological effects were reduced at low doses and dose rates. There is evidence that the risks from high-LET radiation are linear with dose and independent of dose rate (for low to moderate doses). Implicit in ICRP's risk estimates for low dose/dose rate gamma radiation is a dose rate reduction factor of about 2.5. The EPA (linear) risk model for low-LET radiation does not employ a DREF; therefore, in order to avoid an artifactual inflation in high-LET risk estimates, EPA has assumed an RBE of 8 (20/2.5) for calculating the risks from alpha particles (see Section 6.3.3).

In 1980, the ICRP published the task group report "Biological Effects of Inhaled Radionuclides," which compared the results of animal experiments on radiocarcinogenesis following the inhalation of alpha-particle and beta-particle emitters (ICRP80). The task group concluded that: "...the experimental animal data tend to support the decision by the ICRP to change the recommended quality factor from 10 to 20 for alpha radiation."

6.3.2 Dose Response Function

In the case of high-LET radiation, a linear dose response is commonly observed in both human and animal studies. This response is not reduced at low dose rates (NCRP80). Some data on human lung cancer indicate that the carcinogenic response per unit dose of alpha radiation is maximal at low doses (Ar81, Ho81, Wh83); in addition, some studies with animals show the same response (Ch81, Ul82). EPA agrees with the NAS BEIR III Committee that: "For high-LET radiation, such as from internally deposited alpha-emitting radionuclides, the linear hypothesis is less likely to lead to overestimates of the risk and may, in fact, lead to underestimates" (NAS80). However, at low doses, departures from linearity are small compared to the uncertainty in the human epidemiological data, and EPA believes a linear response provides an adequate model for evaluating risks in the general environment.

A possible exception to a linear response is provided by the data for bone sarcoma (but not sinus carcinoma) among U.S. dial painters who ingested alpha-emitting Ra-226 (NAS80). These data are consistent with a dose-squared response (Ro78). Consequently, the NAS BEIR III Committee estimated bone cancer risk on the basis of both linear and quadratic dose response functions. However, as pointed out in NAS80, the number of U.S. dial painters at risk who received less than 1,000 rads was so small that the absence of excess bone cancer at low doses is not inconsistent with the linear response model. Therefore, the consistency of these data with a quadratic (or threshold) response is not remarkable and, perhaps, not relevant to evaluating risks at low doses. In contrast to the dial painter data, the incidence of bone cancer following short-lived radium-224 irradiation, observed in spondylitics by Mays and Spiess (Ma83, NAS80) in a larger sample at much lower doses, is

consistent with a linear response. Therefore, for high-LET radiations, EPA has used a linear response function to evaluate the risk of bone cancer.

Closely related to the choice of a dose response function is what effect the rate at which a dose of high-LET radiation is delivered has on its carcinogenic potential. This is an area of active current research. There is good empirical evidence, from both human and animal studies, that repeated exposures to radium-224 alpha particles are 5 times more effective in inducing bone sarcomas than a single exposure that delivers the same dose (Ma83, NAS80). The 1980 NAS BEIR Committee took this into account in its estimates of bone cancer fatalities, which EPA is using.

6.3.3 Assumptions Made by EPA for Evaluating the Risk from Alpha-Particle Emitters

EPA has evaluated the risk to specific body organs by applying an RBE of 8 for alpha radiations to the risk estimates for low dose rate, low-LET radiations as described above. As in the case of low-LET radiations, EPA risk estimates for high-LET radiations are based on a linear dose response function. For bone cancer and leukemia, EPA uses the absolute risk projection model described in the previous section. For other cancers, the Agency uses relative risk projections.

Lifetime risk estimates for alpha doses, as a function of age, sex, and cancer site, are easily obtained by multiplying the appropriate entry in Table 6-6 or 6-7 by a factor of 8. The whole-body risks from lifetime exposure of the general population are then calculated to be 3.1×10^{-3}/rad (mortality) and 5.0×10^{-3}/rad (incidence).

As outlined above, the risk estimate for bone cancer in the BEIR III report is based directly on data for high-LET (alpha) radiation. Some readers may note that the EPA high-LET risk estimate, 20 bone cancer fatalities per 10^6 person-rad, is less than the 27 fatalities listed in Table A-27 of NAS80 for alpha particles. This is because the analysis in Appendix A of NAS80 (but not Chapter V of that report) assumes that in addition to a 2-year minimum induction period, 25 years are available for cancer expression. This is usually not the case for doses received beyond about age 50. Hence, the estimated lifetime risk is smaller when it is based on a life table analysis that considers lifetime exposure in conjunction with competing causes of death.

6.3.4 Uncertainties in Risks from Alpha-Particle Emitters

The uncertainties in risk associated with internally deposited alpha emitters are often greater than for low-LET radiation. Human epidemiological data on the risks from alpha emitter are largely confined to: (1) lung cancer induced by radon

decay products (see below); (2) bone cancer induced by radium; and (3) liver cancer induced by injected thorotrast (thorium). Many of the risk estimates presented here for alpha irradiation assume an RBE of 8, as determined from high dose experiments on animals. The available evidence on cells, animals, and humans points to a linear dose response relationship for the risk from alpha emitters (NAS88). The extrapolation to low doses is therefore considered to be less important as a source of uncertainty for alpha irradiation than for low-LET irradiation. There is, however, considerable variability in the RBE determined from animal studies; the extrapolation of these results to humans is also problematic.

For many alpha-emitting radionuclides, the most important source of uncertainty in the risk estimate is the uncertainty in the dose to target cells. Contributing to this uncertainty are uncertainty in the location of these cells, ignorance regarding the metabolism of the radionuclide, nonuniformity of radionuclide deposition in an organ, and the short range of alpha particles in tissue (see Chapter 5).

In the case of alpha irradiation of the lung by radon decay products, there are human epidemiological data that allow direct estimation of the risk per unit exposure. Knowledge of RBE and the actual dose to target cells is therefore not important except as the dose per unit exposure might differ between mine and indoor environments. As a consequence, the estimated uncertainty in average radon risk estimates is similar to that for low-LET radiation. [As discussed in Section 6.4.5, the EPA is employing a central risk estimate for excess radon exposure of 360 fatal lung cancers/10^6 WLM and an uncertainty range of 140-720 fatal lung cancers/10^6 WLM.]

As discussed in Section 6-2, recent analyses of the Japanese A-bomb survivor data indicate that risk estimates for whole-body, low-LET radiation predicated on the linear, relative risk model will have to be increased approximately three-fold, although individual organ risks will generally change by differing factors. Since the organ specific, high-LET risk estimates used here are 8 times those calculated for low-LET radiation, one would expect a corresponding 3-fold increase in high-LET risk estimates. Moreover, application of a DREF to the calculation of low-LET risks would not affect this conclusion, since, as discussed above, this would imply a compensating increase in the RBE. Consequently, it might be argued that current EPA estimates of risk due to alpha irradiation are too low.

While EPA intends to conduct a comprehensive review of both its low- and high-LET risk estimates after the BEIR V report becomes available, we do not believe that current high-LET risk estimates are biased low in a serious way. It should be noted, in this connection, that the doses from internally deposited alpha emitters are usually concentrated in certain organs - especially bone, bone marrow, and lung. Risks of bone cancer

caused by bone seeking radionuclides (NAS80; NAS88) or lung cancers caused by inhaled radon decay products (see Section 6.4) are derived directly from epidemiological data on high-LET radiation; consequently, these risk estimates will not be affected by changes in the Japanese data. Epidemiological evidence indicates that the risk of radiogenic leukemia induced by alpha emitters deposited in the bone is lower than would be estimated from the gamma ray risk after adjusting for alpha RBE (NAS88); possibly this discrepancy relates to difficulty in estimating dose to target cells in the bone marrow due to alpha particles originating in the mineral phase of the bone. EPA's estimates of risk from alpha emitters deposited in the lung in the form of insoluble particles are also conservative. Alpha radiation emitted from such particles, for the most part, irradiate the pulmonary region of the lung (the alveoli). The risk of lung cancer is calculated, in this case, by multiplying the pulmonary region dose by the risk factor for the whole lung. Using the pulmonary dose as an effective lung dose will bias the risk estimate high by an unknown but possibly large factor, especially since the great majority of human lung cancers seem to originate in the tracheobronchial region of the lung.

The next section describes how EPA estimates the risk due to inhalation of alpha-emitting radon progeny, a situation where the organ dose is highly nonuniform.

6.4 ESTIMATING THE RISK FROM LIFETIME POPULATION EXPOSURES FROM RADON-222 PROGENY

The Agency's estimates of the risk of lung cancer due to inhaled radon progeny do not use a dosimetric approach, but rather are based on what is sometimes called an epidemiological approach: that is, on the excess human lung cancer in groups known to have been exposed to radon progeny.

When radon-222, a radioactive noble gas, decays, a number of short half-life radionuclides (principally polonium-218, lead-214, bismuth-214, and polonium-214) are formed. These decay products, commonly referred to as "progeny" or "daughters," readily attach to inhalable aerosol particles in air. When inhaled, the radon progeny are deposited on the surfaces of the larger bronchi of the lung. Since two of these radionuclides decay by alpha-particle emission, the bronchial epithelium is irradiated by high-LET radiation. A wealth of data indicate that a range of exposures to the bronchial epithelium of underground miners causes an increase in bronchial lung cancer, both in smoking and in nonsmoking miners, and in some members of the general public. Recently the National Academy of Sciences, BEIR IV Committee, and the International Commission on Radiological Protection reviewed the question of radon risks and reported their conclusions (NAS88, ICRP87).

Although considerable progress has been made in modeling the deposition of radon daughters in the lung, it is not yet possible

to characterize adequately the bronchial dose delivered by alpha radiation from inhaled radon-222 progeny (NAS88). This is in part due to the uncertainty concerning the kinds of cells in which bronchial cancer is initiated and the depth of these cells in the bronchial epithelium.

Aside from the uncertainties in the dose calculations, a purely dosimetric approach to radon risk estimation appears untenable. Such an approach relates the risk from a given absorbed dose to the lung resulting from radon progeny exposure to that from gamma or x-ray exposure. This approach ignores the extensive epidemiological data on radon exposed miners and bases risk estimates indirectly on epidemiological studies of populations exposed to low-LET radiation. It must also, therefore, make use of an RBE for alpha particles estimated from animal studies. Given the uncertainties in the latter epidemiological studies and in the RBE, there would seem to be no advantage to this approach. Consequently, EPA agrees with the BEIR IV Committee conclusion that radon decay product dosimetry in the lung is only useful for extrapolating radon risk estimates from one exposure situation to another (NAS88).

6.4.1 Characterizing Exposures to the General Population vis-a-vis Underground Miners

Exposures to radon progeny under working conditions are commonly reported in a special unit called the working level (WL). One working level is any combination of short half-life radon-222 progeny having 1.3×10^5 MeV per liter of potential alpha energy (FRC67). This value was chosen because it is the alpha energy released from the total decay of the short-lived radon progeny at radioactive equilibrium with 100 pCi/L of radon-222. The WL unit was developed because the concentration of specific radon progeny depends on ventilation rates and other factors. A working level month (WLM) is the unit used to characterize a miner's exposure to one working level of radon progeny for a working month of about 170 hours. Because the results of epidemiological studies are expressed in units of WL and WLM, the following outlines how they can be interpreted for members of the general population exposed to radon progeny.

There are age- and sex-specific respiratory rate and volume differences, as well as differences in duration of exposure, in a general population as compared to a mining population. In earlier reports, EPA used an "exposure equivalent," a modified WLM in which adjustments were made for age-specific differences in airway dimensions and surface area, respiratory frequency, and tidal volume. These factors were expected to influence aerosol deposition and, therefore, radiation dose from radon daughters. This approach to quantifying exposure, correcting for differences in these factors, was recommended by Evans (Ev69) and is consistent with the original derivation of the working level (Ho57).

The BEIR IV Committee, however, concluded that the tracheo-bronchial "dose per WLM in homes, as compared to that in mines, differs by less than a factor of 2," and advised that the dose and risk per WLM exposure in residences and in mines should be considered to be identical until better dosimetric estimates are developed (NAS88). EPA will follow the lead of the BEIR IV Committee in this regard and will not use the "exposure equivalent" correction employed to compensate for age- and sex-specific tracheo-bronchial deposition in earlier EPA reports. In this report, exposure of any individual to 1 WL for 170 hours is 1 WLM and for 1 year is 51.56 WLM. This change puts EPA risk estimates in standard units generally used for this purpose, still without requiring dose calculations.

For indoor exposure, an occupancy factor of 0.75 is still employed. Discussion of the support for this estimate can be found in EPA86.

6.4.2 The EPA Model

The initial EPA method for calculating radon risks has been described in detail (EPA79, El79). As new data were reported, the EPA revised its model to reflect changes, as contained in consecutive reports (EPA79, EPA82, EPA83a, EPA83b, EPA84, EPA85,and EPA86). The Agency initially projected radon lung cancer deaths for both absolute and relative risk models, but, since 1978, EPA has based risk estimates due to inhaled radon-222 progeny on a linear dose response function, a relative risk projection model, and a minimum induction period of 10 years. A life table analysis has been used to project this risk over a full life span. Lifetime risks were initially projected on the assumption that an effective exposure of 1 WLM increased the age-specific risk of lung cancer by 3 percent over the age-specific rate in the U.S. population as a whole (EPA79). In the most recent documents, lifetime risks were calculated for a range of risk coefficients from 1 percent to 4 percent per WLM (EPA86).

Although occupational exposures to pollutants other than radon-222 progeny are probably not important factors in the observed lung cancer risk for underground miners (El79, Th82, Mu83, Ra84, Se88), the use of occupational risk data to estimate the risk of a general population is far from optimal, as it provides no information on the effect of radon progeny exposures for children and women. While for most estimates, it is assumed that the risk per unit dose received by children is no higher than that received by adults, this assumption may not be correct.

The A-bomb survivor data indicate that, in general, the risk from childhood exposure to low-LET radiation is greater than from adult exposure and continues for at least 33 years, the time over which A-bomb survivors have been observed (Ka82). There are not, as yet, adequate age-specific data on occurrence of lung cancer in those under 10 years of age at the time of exposure (Ka82). Another limitation of the underground miner data is the absence

of women in the studied populations. The A-bomb survivor data indicate women are as sensitive as men to radiogenic lung cancer from low-LET radiation even though, on the whole, they smoke less (Pr83). These data are not conclusive, however.

6.4.3 Comparison of Earlier Risk Estimates

Several estimates of the risk due to radon progeny have been published since the original EPA model was developed. These risk estimates were reviewed recently in a number of EPA reports (EPA84, EPA85, and EPA86).

The recent EPA risk estimates for lifetime exposure to a general population, along with AECB, NAS, UNSCEAR, ICRP, and NCRP estimates of the risk of lung cancer resulting from inhaled radon progeny, are listed in Table 6-10. The AECB estimate for lifetime exposure to Canadian males is 830 fatalities per million person-WLM (Th82). In Table 6-10, this estimate has been adjusted for the U.S. 1970 male and female population.

The National Institute for Occupational Safety and Health reviewed published data on miner studies used as a basis for estimated risk coefficients and pointed out some of the strengths and limitations of selected studies (NIOSH87).

The occupational exposure groups that constitute the epidemiological database for the risk estimates are as follows:

1. U.S. Uranium Miners (NIOSH87)

   (a) Strengths: A large, clearly defined, well-traced cohort with some smoking histories and exposure records on the same persons. Standard sampling techniques were used to make measurements.

   (b) Limitations: There were few measurements in small mines, work histories were self-reported, exposures were high, and potential error due to excursions in exposure levels is high.

   (c) Follow-up: 19 years in 1977.

2. Czechoslovakian Uranium Miners (NIOSH87)

   (a) Strengths: Extensive exposure data with a large number of low level exposures and limited exposure to other underground mining. Many possible confounding factors have been investigated and eliminated.

   (b) Limitations: Exposure estimates prior to 1960 based on radon gas measurements. Person years at risk not determined in standard manner. Smoking effect neglected. Elevated levels of arsenic in ore.

Table 6-10. Risk estimate for exposures to radon progeny.

Organization	Model	Fatalities per 10^6 person-WLM	Exposure period	Expression period
EPA	Rel.	760 (460)[a]	Lifetime	Lifetime
NAS*	A-S Abs.	730 (440)[a]	Lifetime	Lifetime
AECB[b]	Rel.	600 (300)[a]	Lifetime	Lifetime
ICRP	-	150-450	Working Lifetime	30 years
UNSCEAR	-	200-450	Lifetime	40 years
NCRP[c]	Dec. Abs.	130	Lifetime	Lifetime

*BEIR III

[a] EPA and AECB based their estimates of risk for the general population on an exposure equivalent, corrected for breathing rate (and other factors). For comparison purposes, the values in parentheses express the risk in more customary units, in which a continuous annual exposure to 1 WL corresponds to 51.6 WLM.

[b] Adjusted for U.S. General Population: see text.

[c] NCRP84: Table 10.2; assumes risk diminishes exponentially with a 20-year halftime, and no lung cancer risk is expressed before age 40.

Sources: EPA83b; NAS80; Th82; ICRP81; EPA86; UNSCEAR77; NCRP84; USRPC80.

Models: Rel. - Relative Risk Projection
A-S Abs. - Age-Specific Absolute Risk Projection
Dec. Abs. - Decaying Absolute Risk Projection

(c) Follow-up: 26 years in 1975.

3. Ontario Uranium Miners (NIOSH87)

(a) Strengths: Miners received low mean cumulative exposures. Prior mining experience was carefully traced. Exposures prior to 1967 may be disputed.

(b) Limitations: Median age of the cohort was 39 years in 1977. Thoron and gamma exposures may have been high but not accounted for. Smoking history is limited.

(c) Follow-up: 18 years in 1977.

4. Malmberget Iron Miners (NIOSH87)

(a) Strengths: Low exposure levels, long follow-up and stability of work force. Complete ascertainment of vital status and confirmation of diagnosis. Risk from confounders was examined and ruled out.

(b) Limitations: Relatively small cohort with limited exposure data and an unclear cohort definition.

(c) Follow-up: 44 years in 1976

5. Eldorado - Uranium Miners (NAS88)

(a) Strengths: Very low exposure rates, miners screened for prior mining experience, roughly equal groups of surface only and underground only miners, Silica and diesel exhaust exposures low. Potential confounders investigated.

(b) Limitations: Exposure estimates are disputed. Sixteen percent of the miners excluded for incorrect or missing data. Average age in 1980 was 43 years.

(c) Follow-up: 14 years in 1980.

6.4.4 Recent Radon Risk Estimates

6.4.4.1 BEIR IV

At the beginning of 1988, the National Academy of Sciences released the BEIR IV Committee report, reviewing information on the risks from radon and other alpha-emitting radionuclides (NAS88). With the cooperation of the principal investigators, BEIR IV examined in detail the mortality experience of four cohorts of underground miners (the U.S., Ontario, and Eldorado uranium miners and the Malmberget iron miners) and how the mortality related to radon daughter exposure. The Committee calculated the relationship of age-specific relative risk to exposure level and time-since-exposure (TSE) in two analyses. The first used internal cohort comparisons and was a grouped-data

000152

analog of a Cox relative-risk regression (NAS88). The second analysis compared the cohorts with external rates and was a generalization of standard SMR methods. Separate parallel analyses were carried out to establish a single combined value for each parameter.

The mathematical form of the Committee's preferred TSE model for the radon related age-specific mortality rate at age a is

$$r(a) = r_0(a)[1 + 0.025\ \gamma(a)(W_1 + 0.5W_2)] \qquad (6\text{-}1)$$

where

$r_0(a)$ = age-specific lung cancer mortality rate

$\gamma(a)$ = 1.2, if a is less than 55 years
1.0, if a is between 55 and 64 years
0.4, if a is greater than 64 years

W_1 = WLM incurred between 5 and 15 years prior to age a

W_2 = WLM incurred more than 15 years prior to age a

The Committee model is, therefore, an age-specific, relative-risk projection model with a 5-year latent period prior to expression of risk.

The BEIR IV Committee also estimated what the lung cancer risk coefficient would be for an age-constant, relative-risk model. The results of this analysis are summarized in Table 6-11.

Table 6-11. BEIR IV committee estimate of lung cancer risk coefficient for age-constant, relative-risk model.

Cohort	Excess Risk per WLM	95% Confidence Limits
U.S.	0.6	0.3 - 1.3
Ontario	1.4	0.6 - 3.3
Eldorado	2.6	1.3 - 6.0
Malmberget	1.4	0.3 - 8.9
Combined	1.34	0.8 - 2.3

In its analysis, the BEIR IV Committee identified two major areas of uncertainty affecting its conclusions: (1) uncertainty related to the Committee's analysis of cohort data and

(2) uncertainty related to projection of the risk to other groups. The Committee's TSE model uses risk coefficients derived from analysis of data from four miner cohorts. Random or systematic errors, particularly systematic errors, could bias the conclusions. Sources of error in addition to basic sampling variation include: (1) errors in exposure estimates, particularly since the magnitude of error may differ among the studies; (2) errors of misclassification of cause of death; (3) errors in smoking status of individual miners, and (4) modeling uncertainty--i.e., does the model properly address all parameters that are determinants of risk?

Having developed the TSE model for miners, the Committee anticipated the following sources of uncertainty in projecting the model across other groups: (1) effect of gender (miner data all for males); (2) effect of age (miner data contain no information on exposures before about age 20); (3) effect of smoking (miner data contain poor information on smoking status); (4) temporal expression of risk (not enough miners have died to establish accurately the pattern of lifetime risk from radon exposure), and (5) extrapolation from mining to indoor environments (what are significant differences in the air in mines compared to air indoors?). After reviewing the various sources of uncertainty, the BEIR IV Committee concluded [p42]," ...The imprecision that results from sampling variation can be readily quantified, but other sources of variation cannot be estimated in a quantitative fashion." Therefore, the Committee chose not to combine the various uncertainties into a single numerical value" (NAS88).

The question of errors in exposure estimates is particularly interesting since the modeling is strongly influenced by the U.S. uranium miner data. In fact, the model risk estimates would be 33 percent higher if the U.S. cohort was removed. Exposure in the U.S. cohort is poorly known: cumulative WLM (CWLM) are calculated from measured radon levels for only 10.3 percent of the miners, varying amounts of estimation are required for about 36.1 percent of the miners, and guesswork is used for about 53.6 percent of the miners (NAS88, Lu71). Only 26.1 percent of the U.S. uranium miner exposure data are based on measured values (Lu71).

The Ontario cohort exposure estimates also are not well founded. Upper and lower estimates were developed: the lower from measured values, the upper based on engineering judgment (NAS88). Eldorado cohort estimates of CWLM were based almost entirely on measured values, while Malmberget cohort estimates were based on a reconstruction of past ventilation conditions (NAS88). Of the four cohorts, the United States has one of the poorest bases for CWLM estimates. One serious problem is the potential error due to large excursions in radon daughter concentrations (NIOSH87). The uncertainties in exposure estimates are particularly significant in view of the rather large impact the U.S. cohort has on the form of the model.

When the BEIR IV model is run with the 1980 lifetable and vital statistics at an exposure level of 0.001 WLM per year, the reference risk can be calculated (see Table 6-12).

Table 6-12. BEIR IV Risk Model - Lifetime Exposure and Lifetime Risk.

Group	Risk (10^{-6}/WLM)
Male	530
Female	185
Combined	350

6.4.4.2 ICRP 50

The International Commission on Radiological Protection, in its Publication 50, addressed the question of lung cancer risk from indoor radon daughter exposures. The ICRP Task Group took a direction quite different from the BEIR Committee. The Task Group reviewed published data on three miner cohorts: U.S., Ontario, and Czech uranium miners. The estimated risk coefficients by cohort are presented in Table 6-13.

Table 6-13. Estimated lung cancer risk coefficients from radon progeny exposure for three miner cohorts.

Cohort	Follow-up	Relative model	Absolute model
U.S.	1950-1977	0.3%-1.0%	2-8 cases/10^6 PWLMY
Czech	1948-1975	1.0%-2.0%	10-25 cases/10^6 PWLMY
Ontario	1958-1981	0.5%-1.3%	3-7 cases/10^6 PWLMY
Average		1%	10 cases/10^6 PWLMY

Source: ICRP87.

The relative risk model then developed for a constant exposure rate is:

$$\lambda(t) = \lambda_o(t)[1 + \int_0^{t-\tau} r(t_e)\ \dot{E}(t_e)\ dt_e] \qquad (6\text{-}2)$$

= the mortality rate at age t

where:

$\lambda_o(t)$ = the age-specific lung cancer rate at age t

$r(t_e)$ = risk coefficient at age of exposure t_e

$\dot{E}(t_e)$ = age-dependent exposure rate

τ = time lag (minimal latency) = 10 years

In the case of a constant exposure rate or constant annual exposure, the equation collapses to:

$$\lambda(t) = \lambda_o(t)[1 + \bar{r}\, E(t - \tau)] \qquad (6\text{-}3)$$

where:

$\bar{r}$ = age averaged relative risk coefficient

$E(t - \tau)$ = $\dot{E}\,[t - \tau]$

= cumulative exposure to radon daughters to age $t-\tau$

Since ICRP recommends the use of the relative risk model, the ICRP 50 absolute risk model will not be addressed further in this document.

To adapt the relative risk model derived from studies of underground miners for the general population, the ICRP Task Group introduced several adjustments. The first was to correct for co-carcinogenic influences in mines. To account for unidentified, unproven carcinogens that might be present in mine environments but not elsewhere, only 80 percent of the risk was attributed to radon. The second adjustment was for dosimetric corrections. The dose to bronchial epithelium used by the Task Group for persons indoors was estimated to be only 80 percent as large as that for persons in mines; therefore, the risk to the public from radon was considered to be 80 percent of the risk of miners.

Adjusting the average relative risk coefficient of 1 percent per WLM by these two factors gives a risk coefficient of 0.64 percent per WLM:

$$1.0\% \times 0.8 \times 0.8 = 0.64\%. \qquad (6\text{-}4)$$

The third adjustment made by the Task Group is related to age. Since reports of Japanese A-bomb survivors and some other radiation-exposed groups support an elevated estimate of risk in children compared to adults, the Task Group increased the risk coefficient of persons between birth and age 20 by a factor of 3.

The final relative risk coefficients in the ICRP 50 model are: 1.9 percent per WLM if the age at time of exposure is between birth and 20 years, and 0.64 percent per WLM if age at time of exposure exceeds 20 years.

When the ICRP 50 relative risk model is run with 1980 U.S. lifetable and vital statistics at an exposure level of 0.001 WLM per year, the reference risk calculated is:

Group	Risk (10^{-6}/WLM)
Male	610
Female	205
Combined	420

6.4.5 Selection of Risk Coefficients

To estimate the range of reasonable risks from exposure to radon-222 progeny for use in the Background Information Document for Underground Uranium Mines (EPA85), EPA averaged the estimates of BEIR III, the EPA model, and the AECB to establish an upper bound of the range. The lower bound of the range was established by averaging the UNSCEAR and ICRP estimates. The Agency chose not to include the NCRP estimate in its determination of the lower bound because this estimate was believed to be outside the lower bound. With this procedure, the EPA arrived at relative risk coefficients of 1.2 percent to 2.8 percent per WLM exposure equivalent (300 to 700 fatalities per million person-WLM exposure equivalent) as estimates of the possible range of effects from inhaling radon-222 progeny for a full lifetime. Although these risk estimates did not encompass the full range of uncertainty, they seemed to illustrate the breadth of much of current scientific opinion.

The lower limit of the range of 1985 EPA relative risk coefficients, 1.2 percent per effective WLM, was similar to that derived by the Ad Hoc Working Group to Develop Radioepidemiological Tables, which also used 1.2 percent per WLM (NIH85). However, some other estimates based only on U.S. and Czech miner data averaged 1 percent per WLM (Ja85) or 1.1 percent per WLM (St85). On the other hand, three studies - two on miners (Ra84, Ho86) and one on residential exposure (Ed83, Ed84) - indicated a relative risk coefficient greater than 3 percent per WLM, perhaps as large as 3.6 percent.

The EPA therefore increased the upper limit of its estimated range of relative risk coefficients. To estimate the risk due to

radon-222 progeny, the EPA used the range of relative risk coefficients of 1 to 4 percent per WLM. (See EPA86 for a more detailed discussion.) Based on 1980 vital statistics, this yielded, for members of the general public, a range of lifetime risks from 380 to 1,520 fatal cases per 10^6 WLM (expressed in exposure equivalents). In standard exposure units, uncorrected for breathing rate and age, this corresponds to 230 to 920 cases per 10^6 WLM. Coincidentally, the geometric mean estimate obtained in this way with 1980 vital statistics, 4.6×10^{-4}/WLM in standard units of exposure, is numerically the same as that obtained using a 3 percent relative risk coefficient and 1970 vital statistics (see Table 6-7).

However, in light of the two recently published consensus-based reports, BEIR IV and ICRP 50, and a recent report on the Czech miner groups (Se88), the Agency has reviewed its basis for radon risk estimation. Comparable relative risk coefficients for miners (age-constant relative risk) yield a coefficient of around 1 percent in ICRP 50, 1.34 percent in BEIR IV, and 1.5 percent in the Czechs. This suggests that the range, 1 percent to 4 percent, used by EPA may be too wide. Nevertheless, note that only 5 of the 20 or so studies for which there are some data are included in these estimates.

The BEIR IV Committee noted and modeled a drop in relative risk with increasing time of exposure and a decreasing relative risk with increasing age after exposure (NAS88). The Czech miners show a similar response pattern (Se88). Though the Committee did note a dose rate effect in the U.S. uranium miner cohort, i.e., a decrease in risk per unit exposure at high dose rates, it was not included in the model (NAS88). The possibility of a similar dose-rate effect was found recently in a study on Port Radium uranium miners (Ho87).

The ICRP 50 Task Group worked from a different database and developed a simpler model with fewer age- and time-dependent parameters. The Task Group provided a 3 times higher risk for exposure between birth and 20 years of age than after 20 years of age (ICRP87). The finding in the recent Czech report that risk prior to age 30 is 2 to 2.5 times greater than after age 30 lends some support to the ICRP conclusions (Se88).

Both BEIR IV and ICRP 50 models treat radon and smoking risks as multiplicative. This conclusion is based primarily on data from the U.S. uranium miner cohort. Although apparently based on weaker evidence, the report on Malmberget miners and the recent report on Czech miners both concluded that the interaction of smoking and radon exposure is small (Ra84, Se88). The attributable risk per unit exposure in smokers and non-smokers was essentially the same (Se88). The true interaction of radon and cigarette smoking is controversial. Both antagonistic (Ax78, Lu79, Ax80) and multiplicative (Lu69, Wh83) interactions have been reported in man, and animal studies can be found to justify any position (Ch81, Ch85, Cr78). In prior calculations, EPA has

always treated the interaction between radon daughters and cigarette smoke as multiplicative. EPA will continue to treat the radon daughter-smoke interaction as multiplicative at this time.

Important unresolved issues pertaining to the risks from inhaled radon progeny remain. At the advice of the Radiation Advisory Committee of EPA's Science Advisory Board, EPA will continue to use relative risk models but shall include both BEIR IV and ICRP 50 model calculations to illustrate the difference in results from the two models. The ICRP 50 model will be slightly modified. The risk reduction factor of 0.8 to compensate for differences in dosimetry will be removed to place the ICRP 50 model and BEIR IV model on a comparative basis. Calculations in the ICRP 50 model will be made using risk coefficients of 2.4 percent per WLM from birth to age 20 and 0.8 percent per WLM for ages greater than 20 years, yielding estimates listed in Table 6-14.

Table 6-14 summarizes risk estimates based on the BEIR IV and the ICRP 50 model, modified as described above. For the calculations in this document, both models were adjusted for the effect of background radon exposure (see section below).

Table 6-14. Lifetime risk from radon daughter exposure of lung cancer death (per 10^6 WLM).

	Model	
Group	BEIR IV	ICRP 50
Men	530	760
Women	185	255
Combined Population	350	500
(Range)	-	(170-840)

The ICRP Task Group concluded that, all things considered, the range of variation of the mean relative risk coefficient is from about 0.3 up to 2 times the value stated (ICRP87). The range of risk cited in Table 6-14 for the ICRP model reflects this uncertainty in the risk coefficient. Since the BEIR IV Committee did not provide a numerical range of uncertainty, no range is given for that model.

Correction of Radon Risk Estimates for the Effect of Background Exposure

A relative risk model for radon-induced lung cancer generally assumes the excess risk, λ_r, from a given exposure, is proportional to the observed baseline risk of lung cancer in the population, λ_o. Thus, for a constant exposure rate, w, the excess risk at age, a, attributable to previous exposure can be written:

$$\lambda_r(w,a) = \lambda_o(a)\ \beta(a) f(w,a) \tag{6-5}$$

For example, in the case of an age-constant relative risk model with a 10-yr minimum latency:

$$\beta(a) = \beta = \text{constant} \tag{6-6}$$

$$f(w,a) = (a-10)w \tag{6-7}$$

Although λ_r is commonly assumed to be proportional to λ_o, a more consistent (and biologically plausible) way to formulate a relative risk model is to assume that the radon risk, λ_r, is proportional to λ_o', the lung cancer rate that would prevail in the absence of any radon exposure (Pu88):

$$\lambda_r(w,a) = \lambda_o'(a)\beta(a) f(w,a) \tag{6-8}$$

Presuming that the risk model can be used to relate $\lambda_o(a)$ to $\lambda_o'(a)$, then

$$\lambda_o(a) = \lambda_o'(a)\ [1 + \beta(a) f(\bar{w},a)] \tag{6-9}$$

where $\bar{w}$ is the <u>average</u> exposure rate in the population. It follows from the previous equation that

$$\lambda_o'(a) = \lambda_o(a)/[1 + \beta(a) f(\bar{w},a)] \tag{6-10}$$

The inferred baseline rate without radon exposure depends, of course, on both the risk model and the presumed average background exposure rate. The excess risk associated with an arbitrary exposure situation can be calculated using standard life table methodology.

The ICRP 50 committee did correct the baseline rate in this way in calculating lifetime population risks, assuming an average exposure rate of 0.2 WLM/yr. The BEIR IV Committee did not incorporate the correction, noting that it would be small (see NAS88, p. 53). In arriving at a final estimate based on the ICRP 50 and BEIR IV models (see Table 6-15), EPA has incorporated a model-specific baseline correction, calculated on the assumption of a 0.25 WLM/yr average radon exposure rate (Pu88). As seen from Tables 6-14 and 6-15, this correction results in roughly a 15 percent reduction in each of the estimates of lifetime risk for the general population.

Table 6-15. Lifetime risk from excess radon daughter exposure (adjusted for a background exposure of 0.25 WLM/yr).

	Risk of Excess Lung Cancer Deaths per 10^6 WLM		
Group	BEIR IV	ICRP 50	Average
Men	460	640	550
Women	160	215	190
Population Combined	305	420	360
(Range)		(140-720)	(140-720)

Summary of Baseline Corrected Radon Risk Estimates

Consistent with the recommendations of the Agency's Radiation Advisory Committee, EPA has here averaged the risk estimates derived from the BEIR IV and ICRP 50 models. These estimates are based on 1980 U.S. vital statistics and are adjusted for an assumed background exposure of 0.25 WLM/yr. Thus, as shown in Table 6-15, the excess lifetime risk in the general population due to a constant, low-level, lifetime exposure is estimated to be 360 excess lung cancer deaths per 10^6 WLM, with a range of 140 to 720 excess lung cancer deaths per 10^6 WLM. (At lifetime exposures above about 100 WLM, numerical estimates would be reduced because of "competing risk" considerations.)

The BEIR IV and ICRP models differ substantially with respect to their dependence on age and time since exposure. Hence, in evaluating exposures at different ages or time periods it is instructive to consider the predictions made by each model. Illustrative examples of such calculations are given in Tables 6-16 and 6-17.

Table 6-16. Lifetime risk for varying age at first exposure and duration of exposure (Background = 0.25 WLM/yr).

		Lifetime Risk of Lung Cancer per 10^6 WLM			
		Male		Female	
Age(yr)	Exposure Duration(yr)	BEIR IV	ICRP 50	BEIR IV	ICRP50
Birth	1	476	1382	184	511
	10	480	1394	185	515
	Lifetime	459	638	159	213
10	1	481	1398	186	516
	10	483	1402	186	517
20	1	486	470	188	173
	10	495	474	190	173
30	1	509	477	195	172
	10	535	472	205	168
40	1	572	461	217	161
	10	592	435	217	148
50	1	602	392	208	130
	10	516	335	170	109
60	1	378	253	114	79
	10	331	182	95	58
70	1	251	96	69	34
	10	182	57	52	22
80	1	88	15	32	8
	10	55	8	21	4
90	1	12	1	7	-
	10	8	1	4	-
100	1	2	-	1	-
	10	1	-	-	-

Table 6-17. Lifetime risk for varying age at first exposure and duration of exposure (Background = 0.25 WLM/yr).

		Excess Lung Cancer Deaths per 10^6 Persons Exposed at 1 WLM/yr			
		Male		Female	
Age(yr)	Exposure Duration(yr)	BEIR IV	ICRP 50	BEIR IV	ICRP50
Birth	1	472	1372	183	508
	10	4723	13725	1828	5085
	Lifetime	32171	44859	12352	16545
10	1	481	1398	186	516
	10	4814	13984	1857	5159
20	1	486	470	187	172
	10	4902	4691	1891	1721
30	1	508	476	195	172
	10	5299	4678	2041	1676
40	1	571	461	217	161
	10	5804	4267	2142	1468
50	1	600	391	208	129
	10	4909	3187	1652	1051
60	1	374	251	114	79
	10	2949	1623	895	546
70	1	246	94	68	34
	10	1406	439	456	192
80	1	84	14	31	8
	10	323	45	146	30
90	1	11	1	7	-
	10	30	2	19	1
100	1	2	-	-	-
	10	2	-	2	-

6.5 OTHER RADIATION-INDUCED HEALTH EFFECTS

The earliest report of radiation-induced health effects was in 1896 (Mo67), and it dealt with acute effects in skin generally caused by very large x-ray exposures. Within the six-year period following, 170 radiation-related skin damage cases had been reported. Such injury, like many other acute effects, is the result of exposure to hundreds or thousands of rads. Under normal situations, environmental exposure does not cause such large doses, so possible acute effects will not need to be considered in assessing the risk to the general population from routine radionuclide emissions.

Radiation-induced carcinogenesis was the first delayed health effect described: the first case was reported in 1902 (Vo02), and 94 cases of skin cancer and 5 of leukemia were reported by 1911 (Up75). Radiation-induced genetic changes were noted soon afterward. In 1927, H.J. Muller described x-ray-induced mutations in animals (in the insect, Drosophila), and in 1928, L.J. Stadler reported a similar finding in plants (Ki62). At about the same time, radiation effects on the developing human embryo were observed. Case reports in 1929 showed a high rate of microcephaly (small head size) and central nervous system disturbance and one case of skeletal defects in children irradiated in utero (UNSCEAR69). These effects, at unrecorded but high exposures and at generally unrecorded gestational ages, appeared to produce central nervous system and eye defects similar to those reported in rats as early as 1922 (Ru50).

For purposes of assessing the risks of environmental exposure to radionuclide emissions, the genetic effects and in utero developmental effects are the only health hazards other than cancer that are addressed in this Background Information Document (BID).

6.5.1 Types of Genetic Harm and Duration of Expression

Genetic harm (or the genetic effects) of radiation exposure is defined as stable, heritable changes induced in the germ cells (eggs or sperm) of exposed individuals, which are transmitted to and expressed only in their progeny and in future generations.

Of the possible consequences of radiation exposure, the genetic risk is more subtle than the somatic risk, since it affects not the persons exposed, but relates only to subsequent progeny. Hence, the time scales for expression of the risk are very different. Somatic effects are expressed over a period on the order of a lifetime, while about 30 subsequent generations (nearly 1,000 years) are needed for near complete expression of genetic effects. Genetic risk is incurred by fertile people when radiation damages the nucleus of the cells which become their eggs or sperm. The damage, in the form of a mutation or a chromosomal aberration, is transmitted to, and may be expressed in, a child conceived after the radiation exposure. However, the

damage may also be expressed in subsequent generations or only after many generations. Alternatively, it may never be expressed because of failure to reproduce or failure of the chance to reproduce.

EPA treats genetic risk as independent of somatic risk even though somatic risk may be caused by mutations in somatic cells because, whereas somatic risk is expressed in the person exposed, genetic risk is expressed only in progeny and, in general, over many subsequent generations. Moreover, the types of damage incurred often differ in kind from cancer and cancer death. Historically, research on genetic effects and development of risk estimates have proceeded independently of the research on carcinogenesis. Neither the dose response models nor the risk estimates of genetic harm are derived from data on studies of carcinogenesis.

Although genetic effects may vary greatly in severity, the genetic risks considered by the Agency in evaluating the hazard of radiation exposure include only those "disorders and traits that cause a serious handicap at some time during lifetime" (NAS80). Genetic risk may result from one of several types of damage that ionizing radiation can cause in the DNA within eggs and sperm. The types of damage usually considered are: dominant and recessive mutations in autosomal chromosomes, mutations in sex-linked (x-linked) chromosomes, chromosome aberrations (physical rearrangement or removal of part of the genetic message on the chromosome or abnormal numbers of chromosomes), and irregularly inherited disorders (genetic conditions with complex causes, constitutional and degenerative diseases, etc.).

Estimates of the genetic risk per generation are conventionally based on a 30-yr reproductive generation. That is, the median parental age for production of children is defined as age 30 (one-half the children are produced by persons less than age 30, the other half by persons over age 30). Thus, the radiation dose accumulated up to age 30 is used to estimate the genetic risks. EPA assessment of risks of genetic effects includes both first generation estimates and total genetic burden estimates.

In the EPA Background Information Document for Radionuclides (EPA84), direct and indirect methods for obtaining genetic risk coefficients are described, and some recent estimates based on these methods are tabulated. Briefly, the direct method takes the frequency of mutation or occurrence of a heritable defect per unit expcsure observed in animal studies and extrapolates to what is expected for humans. Direct estimates are usually used for first generation effects estimates. The indirect method, on the other hand, uses animal data in a different way. The estimated human spontaneous mutation rate per gene site is divided by the average radiation-induced mutation rate per gene observed in mouse studies, to obtain the relative radiation mutation risk in humans. The inverse of this relative radiation mutation risk is

the expected "doubling dose" for radiation-induced mutations in man. The doubling dose is the exposure in rads which will double the current genetic malformation level in man and usually is used to estimate equilibrium effects or all future generation effects.

A doubling dose estimate assumes that the total population of both sexes is equally irradiated, as occurs from background radiation, and that the population exposed is large enough so that all genetic damage can be expressed in future offspring. Although it is basically an estimate of the total genetic burden across all future generations, it can also provide an estimate of effects that occur in the first generation. Usually a fraction of the total genetic burden for each type of damage is assigned to the first generation using population genetics data as a basis to determine the fraction. For example, the BEIR III Committee geneticists estimated that one-sixth of the total genetic burden of x-linked mutations would be expressed in the first generation and five-sixths across all subsequent generations. EPA assessment of risks of genetic effects includes both first generation estimates and total genetic burden estimates.

The 1986 UNSCEAR report (UNSCEAR86) reviewed data on genetic effects. While there was much new information, changes in direct estimates of first generation risk were minimal, reflecting primarily changes in estimates of survival of reciprocal translocations. There was however, an appreciable change in the doubling dose estimate of genetic risk. Because of Hungarian studies the birth prevalences of isolated and multiple congenital anomalies of in man was estimated to be 597.4 per 10^4 live births (UNSCEAR86). The UNSCEAR Committee also estimated congenital anomalies and other multifactorial disorders to have a spontaneous prevalence of 600,000 per 10^6 live births. The UNSCEAR Committee however, made no estimate of the genetic radiation risk coefficients for these types of conditions (UNSCEAR86). The 1988 UNSCEAR Committee also reviewed genetic risks (UNSCEAR88) and confirmed the conclusions of the 1986 UNSCEAR Committee (Table 6-18).

The Agency concluded that the "spontaneous prevalence" of multifactorial disorders described by the UNSCEAR Committees were not all "disorders and traits that cause a serious handicap at sometime during lifetime." Since the multifactorial disorders compose a large fraction of the genetic risk in the BEIR III report, the BEIR III risk estimates will be used until the relevance of the Hungarian studies can be evaluated. The Agency also has concluded estimates of detrement (years of life lost or impaired) as made by several UNSCEAR Committees (UNSCEAR82, 86, 88) should not be used to evaluate genetic risk at this time. As these changes in genetic risk assessment mature, the Agency will review their applicability.

Table 6-18. UNSCEAR 1988 Risks of genetic disease per 1 million live-births in a population exposed to a genetically significant dose of 1 rad per generation of low-dose-rate, low-dose, low-LET irradiation.

(100 rad doubling dose)

Type of genetic disorder	Current incidence per 10^6 liveborn	Effects of 1 rad per generation	
		First Generation	Equilibrium
Autosomal dominant and x-linked	10,000	15	100
Autosomal recessive diseases	25,000		
-Homozygous effects		no increase	11
-Partnership effects		negligible	4
Chromosomal diseases due to structural anomalies	400	2.4	4
Sub-total (rounded)	13,000	18	115
Early acting dominants	unknown	not estimated	
Congenital anomalies	60,000	not estimated	
Other multifactorial diseases*	600,000	not estimated	
Heritable tumors	unknown	not estimated	
Chromosomal diseases due to numerical anomalies	3,400	not estimated	

* prevelance up to age 70

Source: UNSCEAR88

6.5.2 Estimates of Genetic Harm Resulting from Low-LET Radiations

A number of committees have addressed the question of genetic risk coefficient (NAS72, 80, 88; UNSCEAR58, 62, 66, 72, 77, 82, 86, 88; Of80). The detailed estimates of the BEIR III Committee (NAS80) are listed in Table 6-19, those of UNSCEAR (UNSCEAR88) are listed in Table 6-18, and a summary of estimates of the various committees is listed in Table 6-20.

Although all of the reports cited above used somewhat different sources of information, there is reasonable agreement in the estimates. However, all these estimates have a a considerable margin of error, both inherent in the original observations and in the extrapolations from experimental species to man. Some of the committee reports assessing the situation have attempted to indicate the range of uncertainty; others have simply used a central estimate (see Table 6-20). The same uncertainties exist for the latter (central estimates) as for the former.

Most of the difference is caused by the newer information used in each report. Note that all of these estimates are based on the extrapolation of animal data to humans. Groups differ in their interpretation of how genetic experiments in animals might be expressed in humans. While there are no comparable human data at present, information on hereditary defects among the children of A-bomb survivors provides a degree of confidence that the animal data do not lead to underestimates of the genetic risk following exposure to humans. (See "Observations on Human Populations," which follows.)

It should be noted that the genetic risk estimates summarized in Table 6-20 are for low-LET, low-dose, and low-dose-rate irradiation. Much of the data was obtained from high dose rate studies, and most authors have used a sex-averaged factor of 0.3 to correct for the change from high-dose rate, low-LET to low dose rate, low-LET exposure (NAS72, 80, UNSCEAR72, 77). However, factors of 0.5 to 0.1 have also been used in estimates of specific types of genetic damage (UNSCEAR72, 77, 82).

Studies with the beta-particle-emitting isotopes carbon-14 and tritium yielded RBEs of 1.0 and 0.7 to about 2.0, respectively, in comparison to high-dose rate, high-dose exposure to x-rays (UNSCEAR82). At present, the RBE for genetic endpoints due to beta particles is taken as 1 (UNSCEAR77, 82).

6.5.3 Estimates of Genetic Harm from High-LET Radiations

Although genetic risk estimates are made for low-LET radiation, some radioactive elements, deposited in the ovary or testis, can irradiate the germ cells with alpha particles. The relative biological effectiveness (RBE) of high-LET radiation, such as alpha particles, is defined as the ratio of the dose

000168

Table 6-19. BEIR III estimates of genetic effects of an average population exposure of 1 rem per 30-yr generation (chronic x-ray or gamma radiation exposure).

Type of genetic disorder	Current incidence per 10^6 liveborn	Effect per 10^6 liveborn per rem per generation	
		First Generation*	Equilibrium**
Autosomal dominant and x-linked	10,000	5-65	40-200
Irregularly inherited	90,000	(not estimated)	20-900
Recessive	1,000	Very few	Very slow increases
Chromosomal aberrations	6,000	Fewer than 10	Increases only slightly
Total	107,000	5-75	60-1100

* First-generation effects estimates are reduced from acute fractionated exposure estimates by a factor of 3 for dose rate effects and 1.9 for fractionation effects (NAS80, p. 117)

** Equilibrium effects estimates are based on low dose rate studies in mice (NAS80, pp. 109-110).

Source: NAS80.

Table 6-20. Summary of genetic risk estimates per 10^6 liveborn of low-dose rate, low-LET radiation in a 30-yr generation.

Source	Serious hereditary effects	
	First generation	Equilibrium (all generations)
BEAR, 1956 (NAS72)	-	500
BEIR I, 1972 (NAS72)	49[a] (12-200)[b]	300[a] (60-1500)
UNSCEAR, 1972 (UNSCEAR72)	9[a] (6-15)	300
UNSCEAR, 1977 (UNSCEAR77)	63	185
ICRP, 1980 (Of80)	89	320
BEIR III, 1980 (NAS80)	19[a] (5-75)	260[a] (60-1100)
UNSCEAR, 1982 (UNSCEAR82)	22	149
UNSCEAR, 1986 (UNSCEAR86)	17	104
UNSCEAR, 1988 (UNSCEAR88)	18	115

[a] Geometric mean of the lower and upper bounds of the estimates. The geometric mean of two numbers is the square root of their product.

[b] Numbers in parentheses are the range of estimates.

000170

(rad) of low-LET radiation to the dose of high-LET radiation producing the same specific patho-physiological endpoint.

In the Background Information Document for Radionuclides (EPA84), an RBE of 20 was assigned to high-LET radiation when estimating genetic effects. It was noted that studies comparing cytogenetic endpoints after chronic low-dose-rate gamma radiation exposure, or incorporation of plutonium-239 in the mouse testis, have yielded RBEs of 23 to 50 for the type of genetic injury (reciprocal translocations) that might be transmitted to liveborn offspring (NAS80, UNSCEAR77, 82). Neutron RBE, determined from cytogenetic studies in mice, also ranged from about 4 to 50 (UNSCEAR82, Gr83a, Ga82). However, an RBE of 4 for plutonium-239 compared to chronic gamma radiation was reported for specific locus mutations observed in neonate mice (NAS80).

Most recently, the NAS BEIR IV Committee reviewed the effects of alpha-emitting radionuclides and estimated the genetic effects (See Table 6-21). The BEIR IV genetic risk estimates for alpha-emitters were based on the low-LET estimates given in Table IV-2 in the 1980 BEIR III report, applying an RBE of 15 for chromosome aberrations and 2.5 for all other effects.

Table 6-21. Genetic risk estimates per 10^6 live-born for an average population exposure of 1 rad of high-LET radiation in a 30-year generation.

	Serious Hereditary Effects	
	First Generation	Equilibrium (all generations)
Range	28 - 298	165 - 2885
Geometric Mean	91	690

Source: NAS88

These risk estimates, to a first approximation, give an average RBE of about 2.7 relative to the BEIR III low-LET estimates. This is numerically similar to the dose rate effectiveness factor for high dose rate. Therefore, for simplicity, it would be possible to use the same genetic risk coefficients per rad of high dose-rate, low-LET and per rad of high-LET radiation.

6.5.4 Uncertainty in Estimates of Radiogenic Harm

Chromosomal damage and mutations have been demonstrated in cells in culture, in plants, in insects, and in mammals (UNSCEAR72,77,82), and in peripheral blood lymphocytes of persons

exposed to radiation (UNSCEAR82, Ev79, Po78). However, they cannot be used for predicting genetic risk in progeny of exposed persons. Some believe such changes to be a direct expression of damage analogous to that induced by radiation in germ cells. At least, aberrations in peripheral lymphocytes show that radiation-induced chromosome damage can occur in vivo in humans.

Since human data are so sparse, they can be used only to develop upper bounds of some classes of genetic risks following radiation exposure. Most numerical genetic risk estimates are based on extrapolations from animal data.

Data below (Table 6-22), collected by Van Buul (Va80), on induction of reciprocal translocations in spermatogonia in various species, indicate that animal-based estimates for this type of genetic effect may be within a factor of 4 of the human value. The 1986 UNSCEAR Committee (UNSCEAR86) did report on radiation induction of reciprocol translocations in other primates, but the range of responses and conclusions remain the same. However, if there were no human data on this genetic injury, in the majority of cases, assuming that animal results and human results would be similar would underestimate the risk in humans.

Table 6-22. Radiation-induced reciprocal translocations in several species

Species	Translocations (10^{-4} per rad)
Rhesus monkey	0.86 ± 0.04
Mouse	1.29 ± 0.02 to 2.90 ± 0.34
Rabbit	1.48 ± 0.13
Guinea pig	0.91 ± 0.10
Marmoset	7.44 ± 0.95
Human	3.40 ± 0.72

A basic assumption in the doubling-dose method of estimation is that there is a proportionality between radiation-induced and spontaneous mutation rates. Some of the uncertainty was removed in the 1982 UNSCEAR report with the observation that in two-test systems (fruit flies and bacteria), there is a proportionality between spontaneous and induced mutation rates at a number of individual gene sites. There is still some question as to whether or not the sites that have been examined are representative of all sites and all gene loci, with developing evidence that the mouse 7-locus system is more sensitive to radiation than other members of the mouse genome (Ne88). Current research is focused on transposable genetic elements and the relevance of "mobile-genetic-element-mediated spontaneous

000172

mutations" to assumptions in the doubling dose method (UNSCEAR86). The Agency will review its position as new evidence develops.

There is some uncertainty as to which hereditary conditions would be doubled by a doubling dose; future studies on genetic conditions and diseases can apparently, only increase the total number of such conditions. Every report, from the 1972 BEIR and UNSCEAR reports to the most recent, has listed an increased number of conditions and diseases that have a genetic component and hence may be increased by exposure to ionizing radiations.

6.5.4.1 Observations on Human Populations

A study of the birth cohort consisting of children of the Japanese A-bomb survivors was initiated in mid-1946. In a detailed monograph, Neel and Schull (Ne56) outlined the background of this first study and made a detailed analysis of the findings to January 1954 when the study terminated. The study was designed to determine: (1) if during the first year of life, any differences could be observed in children born to exposed parents when compared to children born to suitable control parents, and (2) if differences existed, how they should be interpreted (Ne56).

This study addressed a number of endpoints, including sex ratio, malformations, perinatal data, and anthropometric data; subsequent studies have addressed other endpoints. Recent reports on this birth cohort of 70,082 persons have reported data on six endpoints. Frequency of stillbirths, major congenital defects, prenatal death, and frequency of death prior to age 17 have been examined in the entire cohort. Frequency of cytogenetic aberrations (sex chromosome aneuploidy) and frequency of biochemical variants (a variant enzyme or protein electrophoresis pattern) have been measured on large subsets of this cohort.

There were small but statistically insignificant differences between the number of effects in the children of the proximally and distally exposed with respect to these various indicators. These differences are in the direction of the hypothesis that mutations were produced by the parental exposure. Taking these differences then as the point of departure for an estimate of the human doubling dose, an estimated doubling dose for low-LET radiation at high doses and dose rates for human genetic effects of about 156 rem (Sc81) or 250 rem (Sa82) was obtained as an unweighted average. When each individual estimate was weighted by the inverse of its variance, an average of 139 rem was found (Sc84). Because of the assumptions necessary for these calculations, as well as the inherent statistical errors, the errors associated with these estimates are rather large. As a result, a reasonable lower bound to the human estimate overlaps much of the range based on extrapolation from mouse data.

The most recent report evaluated the following possible genetic effects: (1) untoward pregnancy outcomes, (2) all causes of early mortality, (3) balanced chromosomal exchanges, (4) sex-chromosome aneuploids, (5) early onset cancer, and (6) protein mutations. On the basis of the findings of the study, the authors concluded that the gametic doubling dose measured in humans for acute penetrating radiation exposure from atomic bombs is 150 rem to 190 rem (Ne88).

The EPA is using the geometric mean of the BEIR III range of doubling doses: about 110 rads. EPA believes this estimate of doubling dose probably overstates the risk; however, it is compatible with both human and mouse data and should not be changed at this time. EPA estimates of genetic risks will be reviewed and revised, if necessary, when more complete reports on the Japanese A-bomb survivors are published.

6.5.4.2 Ranges of Estimates Provided by Various Models

Following recommendations of the 1980 BEIR III and earlier committees, EPA has continued to use a linear nonthreshold model for estimating genetic effects, although some data on specific genetic endpoints obtained with acute low-LET exposures are equally well described by a linear-quadratic function. Moreover, in some of these cases, it has been found that a reduction in dose rate (or fractionation of dose) produced a reduction in the quadratic term seen at high doses with little or no effect on the linear component. Such observations can be qualitatively explained, as previously discussed in reference to somatic effects (Section 6.2.2), in terms of the dual radiation action theory of Kellerer and Rossi (Ke72), as well as alternative theories, e.g., one involving enzyme saturation (Go80, Ru58).

Even though genetic risk estimates made by different committees based on the linear non-threshold model vary, the agreement is reasonably good. Some of the committees made estimates in terms of a range. These ranges are expressed as a single value by taking the geometric mean of the range. This method was recommended and first used by UNSCEAR (UNSCEAR58) for purposes of expressing genetic risk estimates. While the authors of the reports used different animal models, interpreted them in different ways, and had different estimates of the level of human genetic conditions in the population, the range of risk coefficients is about an order of magnitude (see Table 6-20). For the most recent, more comparable estimates, the range is a factor of 2 to 4 (see ICRP, BEIR III, and UNSCEAR 1982 in Table 6-17).

6.5.5 <u>The EPA Genetic Risk Estimates</u>

EPA has used the estimates from BEIR III (NAS80) based on a "doubling dose" range with a lower bound of 50 rem and an upper bound of 250 rem. The reasons are as follows: mutation rates for all gene loci affected by ionizing radiation are not known

nor have all loci associated with "serious" genetic conditions been identified. Because the risk estimated by the direct method is incomplete, even for the subject animal species, and does not include the same types of damage estimated by doubling doses, EPA does not consider it further. Moreover, the BEIR III genetic risk estimates provide a better estimate of uncertainty than the UNSCEAR 1982 and ICRP estimates because the BEIR III Committee assigned a range of uncertainty for multifactorial diseases (> 5 percent to < 50 percent) that reflects the uncertainty in the numbers better than the other estimates (5 percent and 10 percent, respectively).

The BEIR III estimates for low-LET radiations give a considerable range. To express the range as a single estimate, the geometric mean of the range is used, a method first recommended by UNSCEAR (UNSCEAR58) for purposes of calculating genetic risk. The factor of 3 increase in risk for high-dose rate, low-LET radiation, noted earlier, is also used. The weighted RBE for high-LET radiation as estimated in BEIR IV is about 3, which is numerically the same as the dose rate factor noted above.

Genetic risk estimates used by EPA for high- and low-LET radiations are listed in Table 6-23. As noted above (Section 6.5.1), EPA uses the dose received before age 30 in assessing genetic risks.

The EPA estimates in Table 6-23 are limited, like all other human genetic risk estimates, by the lack of confirming evidence of genetic effects in humans. These estimates depend on a presumed resemblance of radiation effects in animals to those in humans. The largest human source of data, the Japanese A-bomb

Table 6-23. Estimated frequency of genetic disorders in a birth cohort due to exposure of the parents to 1 rad per generation.

	Serious heritable disorders (Cases per 10^6 liveborn)	
Radiation	First generation	All generations
Low Dose Rate, Low-LET	20	260
High Dose Rate, Low-LET	60	780
High-LET	90	690

survivors, appears at best to provide an estimate of the doubling dose for calculating the genetic risk in man which is not statistically significant (Ne88).

In developing the average mutation rate for the two sexes used in the calculation of the relative mutation risk, the BEIR III Committee postulated that the induced mutation rate in females was about 40 percent of that in males (NAS80). Studies by Dobson, et al., show that the basis for the assumption was invalid and that human oocytes should have a risk equivalent to that of human spermatogonia. This would increase the risk estimate obtained from doubling-dose methods by a factor of 1.43 (Do83, Do84, Do88). Recently Dobson et al. (Do88) have shown that mouse oocytes are very sensitive to radiation, doses of 4 to 12 rads killing 50 percent of the immature mouse oocytes. Immature oocytes in women are not so easily killed. Dobson et al. (Do88) have also shown the existence of a special, hypersensitive, non-DNA lethality target (apparently the plasma membrane) in immature mouse oocytes. Irradiation with low energy neutrons, whose recoil protons have track lengths less than a cell diameter, induces genetic effects in immature mouse oocytes and yields effects similar to those observed in other cells (Do88). Immature human oocytes do not have the same hypersensitive target as mouse oocytes and so should be as susceptible as spermatogonia to genetic effects of radiation.

Unfortunately, BEIR III and, since it is based on BEIR III, BEIR IV have embedded sex-sensitivity differences in their risk estimates. In BEIR III: (1) autosomal dominants and X-linked effects are based on a lower estimate where the oocyte has zero sensitivity and an upper estimate where the oocyte is 44 percent as sensitive as spermatogonia (p. 118); (2) irregularly inherited effects are based on an estimate where the oocyte is 44 percent as sensitive as spermatogonia (pp. 114 and 110); and (3) chromosomal aberrations estimates are based on oocytes and spermatogonia of equal sensitivity (p. 123, NAS80).

Since the sex-specific differences are in both BEIR III and BEIR IV, no attempt is made at this time to correct them. After BEIR V is published, EPA's genetic risk estimates will be reviewed and may then be revised.

The combined uncertainties in doubling-dose estimates and the magnitude of genetic contributions to various disorders probably introduce an overall uncertainty of about an order of magnitude in the risk estimates. Moreover, the BEIR Committee, in deriving its estimate, has assumed that almost all of the risk was due to irregularly inherited mutations which would be eliminated slowly. They may include mild mutations which are but slightly detrimental in their heterozygous state. However, they may be sustained by advances in medical science, thus persisting and accumulating for generations. To what extent this occurs will depend on medical practices in the future.

000278

6.5.6 Effects of Multigeneration Exposures

As noted earlier, while the somatic effects (cancer) occur in persons exposed to ionizing radiation, the genetic effects occur in progeny, perhaps generations later. The number of effects appearing in the first generation is based on direct estimates of the mutations induced by irradiation and should not change appreciably regardless of the background or "spontaneous" mutation rate in the exposed population. The estimate for total genetic effects, or the equilibrium estimate, is based on the doubling-dose concept. For these estimates, the background mutation rate is important: it is the background rate that is being "doubled."

If there is long-lived environmental contamination, such that 30 generations or more are exposed (>1000 years), the background mutation rate will change and come into equilibrium with the new level of radiation background. There will be an accumulation of new radiation-induced mutations until the background mutation rate has reached equilibrium with this continued insult.

While predicting 1,000 years in the future is chancy at best, if it is assumed that there are no medical advances, and no changes in man or his environment, then an estimate can be made. In Table 6-23, it is estimated that exposure to 1 rad per generation of low-dose-rate, low-LET radiation will induce 260 cases of serious heritable disorders per 10^6 live births in all generations. This is for a background mutation rate leading to 29,120 cases of serious heritable disorders per 10^6 live births. The "all generations" estimate in Table 6-23 is equal to the BEIR III "equilibrium" estimate in Table 6-20. The "all generations" estimate is used for exposures to a single generation; the same number is employed as the "equilibrium" estimate for multigeneration exposures (see NAS80, p. 126, note 16). Thus, the risk estimate can be re-expressed as an estimate of the effects expected for a given change in the level of background radiation (Table 6-24). Since these calculations are based both on the background level mutations and the doubling dose, changes in either must be reflected in new calculations.

Table 6-24. Increase in background or level of genetic effects after 30 generations or more.

Increase in background radiation (mrad/y)	Increase in serious heritable disorders per 10^6 live births	
	Low-dose rate, low-LET radiation	High-LET radiation
0.1	0.8	2.1
1.0	8.0	21.2
10.0	80	212

6.5.7 Uncertainties in Risk Estimates for Radiogenic Genetic Effects

As noted throughout the preceding sections, there are sources of uncertainty in the genetic risk estimates. The overall uncertainty can be addressed only in a semi-quantitative manner. The identified sources of uncertainty are listed in Table 6-25. Uncertainties listed in this table are likely to be independent of each other and therefore unlikely to be correlated in sign. Although the root mean square sum of the numerical uncertainties suggests the true risk could be a factor of 4 higher or lower [(x/+) by a factor of 4], it is unlikely, in light of the Japanese A-bomb survivor data, that the upper bound is correct.

Table 6-25. Causes of uncertainty in the genetic risk estimates.

Source of Uncertainty	Degree of Uncertainty in Risk Estimates
Selection of species to use in developing a direct estimate	x/+ factor of 4
Selection of species and loci to use in developing a doubling dose	-100% to estimate +indeterminate [a]
Use of - division by a factor of 3 - to convert acute, high dose, low-LET estimates to chronic, low-LET estimates	x/+ factor of 3
Sensitivity of oogonia compared to spermatogonia as described in BEIR-III	-44% to 56%
Background rate selected for use with a doubling dose	x/+, indeterminate
Selection of RBE for high-LET radiation compared to an RBE of 20	x/+ a factor of 5
Underestimate of the doubling dose required in man	x/+ a factor of 2[b]

[a] The risk estimate cannot go below zero, -100%; but it may not be possible to determine the upper bound, indeterminate.

[b] If the most recent analysis of the Japanese A-bomb survivors is correct, the lower bound for an estimate of the doubling dose in man is at least 2 times greater than the doubling dose estimate derived from the mouse.

000178

6.5.8 Teratogenic Effects

Although human teratogenesis (congenital abnormalities or defects) associated with x-ray exposure has a long history, the early literature deals mostly with case reports. (St21, Mu29, Go29). However, the irradiation exposures were high.

In 1930, Murphy exposed rats to x-rays at doses of 200 R to 1,600 R. Of 120 exposed females, 34 had litters, and five of the litters had animals with developmental defects (Mu30). He felt that this study confirmed his clinical observations and earlier reports of animal studies. Although there were additional studies of radiation-induced mammalian teratogenesis before 1950, the majority of the studies were done after that time (see Ru53 for a review), perhaps reflecting concerns about radiation hazards caused by the explosion of nuclear weapons in 1945 (Ja70).

Much of the work done after World War II used mice (Ru50, Ru54, Ru56) or rats (Wi54, Hi54). Early studies, at relatively high radiation exposures, 25 R and above, established some dose-response relationships. More important, they established the timetable of sensitivity of the developing rodent embryo and fetus to radiation effects (Ru54, Hi53, Se69, Hi66).

Rugh, in his review of radiation teratogenesis (Ru70), listed the reported mammalian anomalies and the exposures causing them. The lowest reported exposure was 12.5 R for structural defects and 1 R for functional defects. He also suggested human exposure between ovulation and about 7 weeks gestational age could lead to structural defects, and exposures from about 6 weeks gestational age until birth could lead to functional defects. In a later review (Ru71), Rugh suggested structural defects in the skeleton might be induced as late as the 10th week of gestation and functional defects as early as the 4th week. It should be noted that the gestation period in mice is much shorter than that in humans and that weeks of gestation referred to above are in terms of equivalent stages of mouse-human development. However, estimates of equivalent gestational age are not very accurate.

Rugh (Ru71) suggested there may be no threshold for radiation-induced congenital effects in the early human fetus. In the case of human microcephaly (small head size) and mental retardation, at least, some data support this theory (Ot83, Ot84).

However, for most teratogenic effects, the dose response at low doses is not known. In 1978, Michel and Fritz-Niggli (Mi78) reported induction of a significant increase in growth retardation, eye and nervous system abnormalities, and post-implantation losses in mice exposed to 1 R. The increase was still greater if there was concurrent exposure to radiosensitizing chemicals such as iodoacetimide or tetracycline (Mi78).

In other reports of animal studies, it appeared as if teratologic effects, other than perhaps growth retardation, had a threshold for induction of effects (Ru54, Ru53, Wi54). However, Ohzu (Oh65) showed that doses as low as 5 R to preimplantation mouse embryos caused increased resorption of implanted embryos and structural abnormalities in survivors. Then in 1970, Jacobsen (Ja70) reported a study in which mice were exposed to 5, 20, or 100 R on the eighth day of pregnancy. He concluded that the dose response function for induction of skeletal effects was linear, or nearly linear, with no observable threshold. This appears consistent with a report by Russell (Ru57), which suggested a threshold for some effects whereas others appeared to be linearly proportional to dose.

One of the problems with the teratologic studies in animals is the difficulty of determining how dose response data should be interpreted. Russell (Ru54) pointed out some aspects of the problem: (1) although radiation is absorbed throughout the embryo, it causes selective damage that is consistently dependent on the stage of embryonic development at the time of irradiation, and (2) the damaged parts respond, in a consistent manner, within a narrow time range. However, while low-dose irradiation at a certain stage of development produces changes only in those tissues and systems that are most sensitive at that time, higher doses may induce additional abnormalities in components that are most sensitive at other stages of development, and may further modify expression of the changes induced in parts of the embryo at maximum sensitivity during the time of irradiation. In the first case, damage may be to primordial cells themselves, while in the second, the damage may lead indirectly to the same or different endpoints.

The human embryo/fetus starts as a single, fertilized egg and divides and differentiates to produce the normal infant at term. (The embryonic period, when organs develop, is the period from conception through 7 weeks gestational age. The fetal period, a time of <u>in utero</u> growth, is the period from 8 weeks gestational age to birth.) The different organ and tissue primordia develop independently and at different rates. However, they are in contact through chemical induction or evocation (Ar54). These chemical messages between cells are important in bringing about orderly development and the correct timing and fitting together of parts of organs or organisms. While radiation can disrupt this pattern, interpretation of the response may be difficult. Since the cells in the embryo/fetus differentiate, divide, and proliferate at different times during gestation and at different rates, gestational times when cells of specific organs or tissues reach maximum sensitivity to radiation are different. Each embryo/fetus has a different timetable. In fact, each half (left/right) of an embryo/fetus may have a slightly different timetable.

In addition, there is a continuum of variation from the hypothetical normal to the extreme deviant which is obviously

recognizable. There is no logical place to draw a line of separation between normal and abnormal. The distinction between minor variations of normal and frank malformation, therefore, is an arbitrary one, and each investigator must establish his or her own criteria and apply them to spontaneous and induced abnormalities alike (HWC73).

The limitations of the human data available make the use of animals in both descriptive and experimental studies inevitable. However, this gives rise to speculation about the possible relevance of such studies to man. There are species differences in development attributable partly to the differing complexity of the adult organs, but especially to differences in growth rates and timing of birth in relation to the developmental events. For example, the histological structure of the brain is, in general, surprisingly similar, both in composition and in function, from one mammalian species to another, and the sequence of events is also similar (Do73). However, the processes of brain development that occur from conception to about the second year of life in man are qualitatively similar to those seen in the rat during the first six weeks after conception (Do79, Do81).

For example, a major landmark, the transition from the principal phase of multiplication of the neuronal precursors to that of glial multiplication, occurs shortly before mid-gestation in man, but at about the time of birth in the rat (Do73). In this respect, then, the rat is much less neurologically mature at birth than the newborn human infant. Many other species are more mature at birth; the spectrum ranges from the late-maturing mouse and rat to the early-maturing guinea pig, with non-human primates much closer to the guinea pig than to man (Do79, Do81). As a consequence, it is unreasonable to compare a newborn rat's brain, which has not begun to myelinate, with that of a newborn human which has, or with that of a newborn guinea pig in which myelination has been completed (Do79, Do81).

Nevertheless, in the study of teratogenic effects of prenatal exposure to ionizing radiation, in which the timing of the exposure in relation to the program of developmental events dictates the consequences of that insult, it is necessary only to apply the experimental exposure at the appropriate stage (rather than at a similar age) of embryonic or fetal development in any species to produce similar results in all (Do79, Do81). The duration of exposure must, however, match the different time scales in the different species. Unless these elementary rules of cross-species adjustments are followed, extrapolation of even qualitative estimates of effects will be of dubious relevance and worth.

Because of the problems in interpretation listed above, a pragmatic approach to evaluation of studies is useful. The dose response should be given as the simplest function that fits the data (often linear or linear with a threshold). No attempt

should be made to develop complex dose response models unless the evidence is unequivocal.

6.5.8.1 Teratologic Effects: Mental Retardation in Humans

The first report of congenital abnormalities in children exposed in utero to radiation from atomic bombs was that of Plummer (Pl52). Twelve children with microcephaly, of which ten also had mental retardation, had been identified in Hiroshima in a small set of the in utero exposed survivors. They were found as part of a program started in 1950 to study children exposed in the first trimester of gestation. However, not all of the in utero exposed survivors were examined. In 1955, the program was expanded to include all survivors exposed in utero.

Studies initiated during the program have shown radiation-related (1) growth retardation; (2) increased microcephaly; (3) increased mortality, especially infant mortality; (4) temporary suppression of antibody production against influenza; and (5) increased frequency of chromosomal aberrations in peripheral lymphocytes (Ka73).

Although there have been a number of studies of Japanese A-bomb survivors, including one showing a dose- and gestational age-related increase in postnatal mortality (Ka73), only the incidences of microcephaly and mental retardation have been investigated to any great extent. In the most recent report, Otake and Schull (Ot83, 84) showed that mental retardation was particularly associated with exposure between 8 and 15 weeks of gestation (10 to 17 weeks of gestation if counted from the last menstrual period). They further found the data suggested little, if any, non-linearity and were consistent with a linear dose-response relationship for induction of mental retardation that yielded a probability of occurrence of severe mental retardation of 4.16 ± 0.4 cases per 1,000 live births per rad of exposure (Ot84). A child was classified as severely mentally retarded if he or she was "unable to perform simple calculations, to make simple conversation, to care for himself or herself, or if he or she was completely unmanageable or had been institutionalized" (Ot83, 84). There was, however, no evidence of an effect in those exposed at 0 to 7 weeks of gestation (Ot83). Exposure at 16 weeks or more of gestation was about a factor of 4 less effective, with only a weak relationship between exposure and risk, and with few cases below 50 rads exposure (Ot84).

Mental retardation can be classified as mild (IQ 50-70), moderate (IQ 35-49), severe (IQ 20-34), and profound (IQ < 20) (WHO75). However, some investigators use only mild mental retardation (IQ 50-70) and severe mental retardation (IQ < 50) as classes (Gu77b, Ha81a, St84). Mental retardation is not usually diagnosed at birth but at some later time, often at school age. Since the mental retardation may have been caused before or during gestation, at the time of birth, or at some time after birth, that fraction caused before or during gestation must be

000182

estimated. In like manner, since mental retardation caused before birth may be due to genetic conditions, infections, physiologic conditions, etc., the fraction related to unknown causes during gestation must be estimated. This is the fraction that might possibly be related to radiation exposure.

Estimates of the risk of mental retardation for a rad of embryo/fetus exposure in the U.S. population can be derived using the absolute risk calculated by Otake and Schull for the Japanese survivors (Ot84). Otake and Schull (Ot84) gave an estimate for one case entitled, "The Relationship of Mental Retardation to Absorbed Fetal Exposure in the 'Sensitive' Period When All 'Controls' Are Combined." This estimate of frequency of mental retardation, 0.416 per 100 rads, could be directly applicable to a U.S. population. In this case, the risk estimate would be about four cases of severe mental retardation per 1,000 live births per rad of exposure during the 8th and 15th week of gestation.

The ICRP published an excellent review of biology and possible mechanisms of occurrence of radiation-induced brain damage, in utero (ICRP86). ICRP estimates: (1) for exposures from the 8th through the 15th week after conception, the risk of severe mental retardation is 4×10^{-3} per rad, with a confidence interval of 2.5×10^{-3} to 5.5×10^{-3}, and (2) for exposures from the 16th through the 25th week after conception, the risk of severe mental retardation is 1×10^{-3} per rad. However, a threshold below 50 rad cannot be excluded (ICRP86).

The 1986 UNSCEAR Committee also reviewed biology and possible mechanisms (UNSCEAR86). Although increased external granular layer pyknosis had been found in rats after exposures of 3 rad and degraded behavioral performance had been reported in rats after four 1 rad doses, the UNSCEAR Committee concluded that ". . . no effects having clearly pathological connotations have been reported for doses in the brain structures lower than 0.1 Gy (10 rad) low-LET radiation." (UNSCEAR86).

If the ICRP estimate is applicable, the low-LET background radiation (about 15 mrads) delivered during the 8- to 15-week gestational age-sensitive period could induce a risk of 6×10^{-5} cases of severe mental retardation per live birth. This can be compared to an estimate of a spontaneous occurrence of 0.6×10^{-3} to 3.1×10^{-3} cases of idiopathic severe mental retardation per live birth (EPA84).

6.5.8.2 Teratologic Effects: Microcephaly in Humans

Plummer (Pl52) reported microcephaly associated with mental retardation in Japanese A-bomb survivors exposed in utero. Wood (Wo65, 66) reported both were increased. The diagnosis of reduced head circumference was based on "normal distribution" statistical theory (Wo66); i.e., in a population, the probability of having a given head circumference is expected to be normally

distributed around the mean head circumference for that population.

For example, in a population of live-born children, 2.275 percent will have a head circumference 2 standard deviations or more smaller than the mean, 0.621 percent will have a head circumference 2.5 standard deviations or more smaller than the mean, and 0.135 percent will have a head circumference 3 standard deviations or more smaller than the mean (statistical estimates based on a normal distribution).

For most of the studies of the Japanese A-bomb survivors exposed in utero, if the head circumference was two or more standard deviations smaller than the mean for the appropriate controls in the unexposed population, the case was classified as having reduced head circumference even if the data had not been adjusted for differences in stature (Ta67, Mi72, Wo65). While a definitive relationship between reduced head circumference and mental retardation has not been established, there is evidence that they are related.

Studies of the Japanese survivors show a relationship between reduced head size and mental retardation, but all these studies are based on subsets of the total in utero population. The fraction of mentally retarded with reduced head circumference has been reported as 50 percent (RERF78) to 70 percent (Wo66), while the fraction of those selected for reduced head circumference who had mental retardation has been reported as 11 percent (Wo66) to 22 percent (Mi72). Thus, while the relationship appears to exist, it has not been quantified.

The majority of the cases of reduced head size are observed in those exposed in the first trimester of gestation, particularly the 6th or 7th to 15th weeks of gestation (Mi59, Wo66, Mi72, Wo65, Ta67). Most recently, it has been shown that reduction in head circumference was a linear function of dose (Is84). However, the authors noted that the analysis was based on T65 dosimetry, and the data should be reanalyzed after completion of the dosimetry reassessment currently in progress.

These findings of reduction in head circumference, with a window of effect in the same time period of gestation as mental retardation, help support the observations on mental retardation. Although the exact dose response functions are still uncertain, data on both types of effects have so far been consistent with a linear, no-threshold dose response during the critical period.

6.5.8.3 Other Teratologic Effects

Effects other than mental retardation and microcephaly have been noted in the Japanes A-bomb survivors. Schull et al (Sc99) reported that in individuals exposed prenatally between weeks 8 and 25 of gestation there is a progressive shift downward in IQ score with increasing exposure and that the most sensitive group

000184

is between 8 and 15 weeks gestational age at time of exposure. Much the same pattern was reported for average school performance, expecially in the earliest years of schooling (Ot88). Finally, a linear-nonthreshold relationship between exposure and incidence of unprovoked seizures in later life has been demonstrated to be consistent with the data for individuals exposed between 8 and 15 weeks gestational age (Du88).

Japanese A-bomb survivors exposed in utero also showed a number of structural abnormalities and, particularly in those who were microcephalic, retarded growth (Wo65). No estimate has been made of the radiation-related incidence or dose-response relationships for these abnormalities. However, UNSCEAR (UNSCEAR77) made a very tentative estimate based on animal studies that the increased incidence of structural abnormalities in animals may be 0.005 cases per R per live born, but stated that projection to humans was unwarranted. In 1986, UNSCEAR assumed the risk of an absolute increase of malformed fetuses of the order of 5E-3 per rad seen in animals might apply to the human species as well, for exposure over the period from 2 to 8 weeks post-conception (UNSCEAR86). In any event, the available human data cannot show whether the risk estimates derived from high-dose animal data overestimate the risk in humans or if a threshold can be excluded.

It should be noted that all of the above estimates are based on high-dose-rate, low-LET exposure. In 1977, UNSCEAR also investigated the dose rate question and stated:

> "In conclusion, the majority of the data available for most species indicate a decrease of the cellular and malformature effects by lowering the dose rate or by fractionating the dose. However, deviations from this trend have been well documented in a few instances and are not inconsistent with the knowledge about mechanisms of the teratogenic effects. It is therefore impossible to assume that dose rate and fractionation factors have the same influence on all teratological effects." (UNSCEAR77).

6.5.9 Nonstochastic Effects

Nonstochastic effects, those effects that increase in severity with increasing dose and have a threshold, have been reviewed in the 1982 UNSCEAR report (UNSCEAR82). Nonstochastic effects following in utero exposure were reviewed in the 1986 UNSCEAR report (UNSCEAR86). In general, acute doses of 10 rads low-LET radiation and higher are required to induce these effects in animals. It is possible that some of the observed effects of in utero exposure are nonstochastic: e.g., the risk of embryonic loss, estimated to be 10^{-2} per R (UNSCEAR77) or per rad (UNSCEAR86) following radiation exposure soon after fertilization. However, there are no data to address the question of similar effects in humans. Usually, nonstochastic

effects are not expected at environmental levels of radiation exposure.

In 1986, the United Nations Scientific Committee on the Effects of Atomic Radiation also reviewed the question of mental retardation as a part of the overall review of the biological effects of prenatal radiation exposure (UNSCEAR86). UNSCEAR, like the ICRP, concluded there was a risk of severe mental retardation of 4×10^{-3} per rad over the period of 8 to 15 weeks after conception and of 1×10^{-3} per rad over the period 16-25 weeks after conception (UNSCEAR86). UNSCEAR also estimated (1) a pre-implantation loss of 1×10^{-2} per rad during the first two weeks after conception, (2) a malformation risk of 5×10^{-3} per rad during weeks 2 to 8 after conception, and (3) a risk of leukemia and solid tumors expressed during the first 10 years of life of 2×10^{-4} per rad (UNSCEAR86).

The British National Radiation Protection Board (NRPB) reviewed available information including the 1988 UNSCEAR report to develop new health effects models (St88). The NRPB estimated a mental retardation risk of 4.5×10^{-3} cases per rad of exposure during weeks 8 to 15 of gestation. The NRPB also estimated a cancer risk of 2.5×10^{-4} cases of leukemia and 3.5×10^{-4} cases of solid tumors per rad of <u>in utero</u> exposure (St88).

EPA has adopted similar risk coefficients for estimating prenatal carcinogenic, teratologic, and nonstochastic effects in man (see Table 6-26).

Table 6-26. Possible effects of <u>in utero</u> radiation exposure.

Type of Risk to Conceptus	Risk per Rad	Risk per Event in a 100 mrad per Year Background
Fatal Cancer	6.0×10^{-4}	4.5×10^{-5}
Mental Retardation (exposure at 8 - 15 weeks)	4×10^{-3}	6.0×10^{-5}
Mental Retardation (exposure at 16 - 25 weeks)	1×10^{-3}	1.5×10^{-5}
Malformation (exposure at 2 - 8 weeks)	5×10^{-3}	5.8×10^{-5}
Pre-implantation Loss (exposure at 0 - 2 weeks)	1×10^{-2}	3.8×10^{-5}

6.6 Summary of EPA's Radiation Risk Factors - A Perspective

Table 6-27 summarizes EPA's estimate of risk from lifetime whole-body exposures to high- and low-LET radiation and to radon decay products. The nominal risk factors reflect EPA's best judgment as to the relationship between dose and risk based on review of all relevant information available to the Agency. Likewise the cited ranges reflect EPA's current best judgment as to the uncertainties in these risk factors.

To provide a perspective on the risk of fatal radiogenic cancers and the hereditary damage due to radiation, EPA has calculated the risk from background radiation to the U.S. population using the risk factors summarized in Table 6-23. The risk from background radiation provides a useful perspective for the risks caused by emissions of radionuclides. Unlike cigarette smoking, auto accidents, and other measures of common risks, the risks resulting from background radiation are neither voluntary nor the result of self-induced damage. The risk caused by background radiation is largely unavoidable; therefore, it is a good benchmark for judging the estimated risks from radionuclide emissions. Moreover, to the degree that the estimated risk of radionuclides is biased, the same bias is present in the risk estimates for background radiation.

The absorbed dose rate from low-LET background radiation has three major components: cosmic radiation, which averages about 28 mrad/yr in the United States; terrestrial sources, such as radium in soil, which contribute an average of 28 mrad/yr (NCRP87); and the low-LET dose resulting from internal emitters. The last differs among organs, to some extent, but for soft tissues it is about 24 mrad/yr (NCRP87). Other minor radiation sources such as fallout from nuclear weapons tests, cosmogenic radionuclides, naturally occurring radioactive materials in buildings, airline travel, and consumer products, contribute about another 7 mrad for a total low-LET whole-body dose of about 87 mrad/yr. The lung and bone receive somewhat larger doses, not included in the 87 mrad/yr estimate, due to high-LET radiations (see below). Although extremes do occur, the distribution of this background annual dose to the U.S. population is relatively narrow. A population-weighted analysis indicates that 80 percent of the U.S. population would receive annual doses that are between 75 mrad/yr and 115 mrad/yr (EPA81).

As outlined in Section 6.2, the BEIR III linear, relative risk models yield, for lifetime exposure to low-LET radiation, an average lifetime risk of fatal radiogenic cancer of 3.9×10^{-4} per rad. Note that this average is for a group having the age- and sex-specific mortality rates of the 1970 U.S. population. This risk estimate can be used to calculate the average lifetime risk due to low-LET background radiation as follows. The average duration of exposure in this group is 70.7 yr, and at 90 mrad/yr, the average lifetime dose is 6.4 rads. The risk of fatal cancer per person in this group is:

Table 6-27. Summary of EPA's radiation risk factors.

Risk	Significant Exposure Period	Risk Factor Nominal	Risk Factor Range
Low LET (10^{-6} rad^{-1})			
Teratological:[a]			
Severe mental retardation	Weeks 8 to 15 of gestation	4,000	2,500 - 5,500
Genetic:			
Severe hereditary defects, all generations	30 year reproductive generation	260	60 - 1,100
Somatic:			
Fatal cancers	Lifetime	390	120 - 1,200
All cancers	Lifetime	620	190 - 1,900
Fatal cancers	In utero	600	180 - 1,800
High LET (10^{-6} rad^{-1})			
Genetic:			
Severe hereditary defects, all generations	30 year reproductive generation	690	160 - 2,900
Somatic:			
Fatal cancers	Lifetime	3,100	960 - 9,600
All cancers	Lifetime	5,000	1,500 - 15,000
Radon decay products (10^{-6} WLM^{-1})			
Fatal lung cancer	Lifetime	360	140 - 720

[a] The range assumes a linear, non-threshold dose response. However, it is plausible that a threshold may exist for this effect.

000188

$$(3.9\times10^{-4}\ \text{rad}^{-1})\ (8.7\times10^{-3}\ \text{rad/y})\ (70.7\ \text{y}) = 2.4 \times 10^{-3} \quad (6\text{-}11)$$

or about 0.24 percent of all deaths. The vital statistics used in EPA's radiation risk analyses indicate that the probability of dying from cancer in the United States from all causes is about 0.16, i.e., 16 percent. Thus, the 0.24 percent result for the BEIR III linear dose response model indicates that about 1.5 percent of all U.S. cancer is due to low-LET background radiation. The BEIR III linear-quadratic model indicates that about 0.1 percent of all deaths are due to low-LET background radiation or about 0.6 percent of all cancer deaths.

Table 6-11 indicates a risk of 5.6×10^{-4} rad^{-1} for alpha emitters in lung tissue. UNSCEAR estimated that in "normal" areas the annual absorbed dose in the lungs from alpha emitters other than radon decay products would be about 0.51 mrad (UNSCEAR77). The individual lifetime cancer risk from this exposure is:

$$(5.6 \times 10^{-4}\ \text{rad}^{-1})\ (5.1 \times 10^{-4}\ \text{rad/y})\ (70.7\text{y}) = 2.0 \times 10^{-5}, \quad (6\text{-}12)$$

which is about 1/100 of the risk due to low-LET background radiation calculated by means of the BEIR III linear model.

The 1982 UNSCEAR report indicates that the average annual absorbed dose to the endosteal surfaces of bone due to naturally occurring, high-LET alpha radiation is about 6 mrad/yr, based on a quality factor of 20 and an absorbed dose equivalent of 120 mrem/yr (UNSCEAR82). Table 6-11 indicates that the individual lifetime risk of fatal bone cancer due to this portion of the naturally occurring radiation background is:

$$(2.0 \times 10^{-5}\ \text{rad}^{-1})\ (6 \times 10^{-3}\ \text{rad/y})\ (70.7/\text{y}) = 8.5 \times 10^{-6}. \quad (6\text{-}13)$$

The exposure due to naturally occurring background radon-222 progeny in the indoor environment is not well known. The 1982 UNSCEAR report lists for the United States an indoor concentration of about 0.004 working levels (15 Bq/m^3) (UNSCEAR82). This estimate is not based on a national survey and is known to be exceeded by as much as a factor of 10 or more in some houses. However, as pointed out in UNSCEAR82, the national collective exposure may not be too dependent on exceptions to the mean concentration. The UNSCEAR estimate for the United States now appears low (Ne86); the average residential exposure is probably 0.2-0.3 WLM/yr (in standard exposure units).

Assuming 0.25 WLM/yr is a reasonable estimate for indoor exposure to radon-222 progeny in this country, the mean lifetime exposure, indoors, is about 18 WLM. Based on the geometric mean lifetime risk coefficient from Section 6.4.5, 360 cases/10^6 WLM, a lifetime risk of 0.64 percent is estimated. For comparison, roughly 5 percent of all deaths in 1980 were due to lung cancer. Based on these assumptions, therefore, about one of eight lung cancer deaths may be attributable to background radon exposure. This would correspond to about 4 percent of all cancer deaths. This is 2.5 times the 1.61 percent of all cancer fatalities estimated above for low-LET background radiation. The reader is cautioned, however, that this risk estimate applies only to the United States population taken as a whole, i.e., men and women, smokers and nonsmokers. Since the vast majority of the 1980 lung cancer mortality occurred in male smokers, this risk estimate cannot be applied indiscriminately to women or nonsmokers (see Section 6.4).

The spontaneous incidence of serious congenital and genetic abnormalities has been estimated to be about 105,000 per 10^6 live births, about 10.5 percent of live births (NAS80, UNSCEAR82). The low-LET background radiation dose of about 87 mrad/year in soft tissue results in a genetically significant dose of 2.6 rads during the 30-year reproductive generation. Since this dose would have occurred in a large number of generations, the genetic effects of the radiation exposure are thought to be at an equilibrium level of expression. Since genetic risk estimates vary by a factor of 20 or more, EPA uses a log mean of this range to obtain an average value for estimating genetic risk. Based on this average value, the background radiation causes about 690 genetic effects per 10^6 live births (see Section 6.5). This result indicates that about 0.6 percent of the current spontaneous incidence of serious congenital and genetic abnormalities may be due to the low-LET background radiation.

6.7 REFERENCES

Ar81 Archer, V.E., Health Concerns in Uranium Mining and Milling, J. Occup. Med., 23, 502-505, 1981.

Ar54 Arey, L.B., Developmental Anatomy, 6th ed., W.B. Saunders, Philadelphia, 1954.

Au67 Auxier, J.A., Cheka, J.S., Haywood, F.F., Jones, T.D. and J.H. Thorngate, Free-Field Radiation Dose Distributions from the Hiroshima and Nagasaki Bombings, Health Phys. 12(3):425-429, 1967.

Au77 Auxier, J.A., Ichiban - Radiation Dosimetry for the Survivors of the Bombings of Hiroshima and Nagasaki, TID 27080, Technical Information Center, Energy Research and Development Administration, National Technical Information Service, Springfield, Virginia, 1977.

Ba73 Baum, J.W., Population Heterogeneity Hypothesis on Radiation Induced Cancer, Health Phys., 25(1):97-104, 1973.

Bo82 Bond, V.P. and J.W. Thiessen, Reevaluations of Dosimetric Factors, Hiroshima and Nagasaki, DOE Symposium Series 55, CONF-810928, Technical Information Center, U.S. Department of Energy, Washington, D.C., 1982.

Bu81 Bunger, B., Cook, J.R. and M.K. Barrick, Life Table Methodology for Evaluating Radiation Risk: An Application Based on Occupational Exposure, Health Phys., 40 (4):439-455.

Ch81 Chameaud, J., Perraud, R., Chretien, J., Masse, R. and J. Lafuma, Contribution of Animal Experimentation to the Interpretation of Human Epidemiological Data, in: Proc. Int. Conf. on Hazards in Mining: Control, Measurement, and Medical Aspects, October 4-9, 1981, Golden, Colorado, pp. 228-235, edited by Manual Gomez, Society of Mining Engineers, New York, 1981.

Ch83 Charles, M.E., Lindop, P.J. and A.J. Mill, A Pragmatic Evaluation of the Repercussions for Radiological Protection of the Recent Revisions in Japanese A-bomb Dosimetry, IAEA SM-266/52, Proceedings, International Symposium on the Biological Effects of Low-Level Radiation with Special Regard to Stochastic and Non-stochastic Effects, Venice, IAEA, Vienna, April 11-15, 1983.

Ch85 Chameaud J., Masse R., Morin M., and Lafuma J., Lung Cancer Induction by Radon Daughters in Rats, in: Occupational Radiation Safety in Mining, Vol. 1, H. Stokes, editor, Canadian Nuclear Assoc., Toronto, Canada, pp. 350-353, 1985.

Co78 Cook, J.R., Bunger, B.M. and M.K. Barrick, A Computer Code for Cohort Analysis of Increased Risks of Death (CAIRD), ORP Technical Report 520/4-78-012, U.S. Environmental Protection Agency, Washington, D.C., 1978.

Cu79 Cuddihy, R.G., McClellan, R.O., and Griffith, W.C. Varability in Target Deposition Among Individuals Exposed to Toxic Substances, Toxicol. Appl. Pharmacol. 49: 179-187, 1979.

Da75 Davies, R.B. and B. Hulton, The Effects of Errors in the Independent Variables in a Linear Regression, Biometrika, 62:383-391, 1975.

Da86 Darby, S.C., Epidemiological Evaluation of Radiaiton Risk Using Populations Exposed at High Doses, Health Phys. 51 (3): 269-281, 1986.

Do73 Dobbing, J. and J. Sands, Quantitative Growth and Development of the Human Brain. Arch. Dis. Child., 48:757-767 (1973).

Do79 Dobbing, J. and J. Sands, Comparative Aspects of the Brain Growth Spurt, Early Human Dev., 3:109-126 (1979).

Do81 Dobbing, J., The later development of the brain and its vulnerability, pp. 744-758, in: Scientific Foundations of Pediatrics, 2nd edition, J.A. Davis and J. Dobbing, editors, William Heinemann Medical Books Ltd., London, 1981.

Do83 Dobson, R.L. and J.S. Felton, Female Germ Cell Loss from Radiation and Chemical Exposures, Amer. J. Ind. Med., 4: 175-190, 1983.

Do84 Dobson, R.L. and T. Straume, Mutagenesis in Primordial Mouse Oocytes Could Be Masked by Cell Killing: Monte Carlo Analysis, Environ. Mutagen. 6, 393, (1984) [Abstract].

Do88 Dobson, L., Straume T. and Kwan C., The Problem of Genetically Meaningful Dose and Hypervulnerable Lethality Targets in Certain Oocytes. Thirty-Sixth Annual Meeting of the Radiation Research Society, Philadelphia, 1988, Book of Abstracts, p 137 Abstract EK-3.

Du88 Dunn, K., H. Yoshimaru, M. Otake, J.F. Annegers, and W.J. Schull. Prenatal Exposure to Ionizing Radiation and Subsequent Development of Seizures. Technical Report RERF TR 13-88, Radiation Effects Research Foundation, Hiroshima, 1988.

Ed83 Edling C., Kling H., and Axelson O., Radon in Homes - A Possible Cause of Lung Cancer, in: Lung Cancer and Radon Daughter Exposure in Mines and Dwellings. Linkoping University Medical Dissertations No. 157, by Christer Edling, Department of Occupational Medicine, Linkoping University, Linkoping, Sweden, pp. 123-149, 1983.

Ed84 Edling C., Wingren G., and Axelson, O., Radon Daughter Exposure in Dwellings and Lung Cancer, in: Indoor Air, Volume 2: Radon, Passive Smoking, Particulates and Housing Epidemiology, B. Berglund, T. Lindvall and J. Sundell, editors, Swedish Council for Building Research, Stockholm, Sweden, pp. 29-34, 1984.

El79 Ellett, W. H. and Nelson, N. S., Environmental Hazards From Radon Daughter Radiation, in: Conference/Workshop on Lung Cancer Epidemiology and Industrial Applications of Sputum Cytology, Colorado School of Mines Press, Golden, Colorado, pp. 114-148, 1979.

EPA78 U.S. Environmental Protection Agency, Response to Comments: Guidance on Dose Limits for Persons Exposed to Transuranium Elements in the General Environment, EPA Report 520/4-78-010, Office of Radiation Programs, Washington, D.C., 1978.

EPA79 U.S. Environmental Protection Agency, Indoor Radiation Exposure Due to Radium-226 in Florida Phosphate Lands, EPA Report 520/4-78-013, Office of Radiation Programs, Washington, D.C., revised printing, July 1979.

EPA81 U.S. Environmental Protection Agency, Population Exposure to External Natural Radiation Background in the United States, Technical Note ORP/SEPD-80-12, Office of Radiation Programs, Washington, D.C., 1981.

EPA82 U.S. Environmental Protection Agency, Final Environmental Impact Statement for Remedial Action Standards for Inactive Uranium Processing Sites (40 CFR 192), Volume I, EPA Report 520/4-82-013-1, Office of Radiation Programs, Washington, D.C., 1982.

EPA83a U.S. Environmental Protection Agency, Draft Background Information Document, Proposed Standards for Radionuclides, EPA Report 520/1-83-001, Office of Radiation Programs, Washington, D.C., 1983.

EPA83b U.S. Environmental Protection Agency, Final Environmental Impact Statement for Standards for the Control of Byproduct Materials from Uranium Ore Processing (40 CFR 192), Volume I, EPA Report 520/1-83-008-1, Office of Radiation Programs, Washington, D.C., 1983.

EPA84 Environmental Protection Agency, Radionuclides Background Information Document for Final Rules. Volume I, EPA Report 520/1-84-022-1, US EPA, Office of Radiation Programs.

EPA85 Environmental Protection Agency, Background Information Document--Standard for Radon-222 Emissions from Underground Uranium Mines. EPA 520/1-85-010, Office of Radiation Programs, USEPA, Washington, D.C., 1985.

EPA86 Environmental Protection Agency, Final Rule for Radon-222 Emissions from Licensed Uranium Mill Tailings, Background Information Document, EPA 520/1-86-009, Office of Radiation Programs, Washington, DC, 1986.

Ev79 Evans, H.J., Buckton, K.E., Hamilton, G.E.,et al.,Radiation-induced Chromosome Aberrations in Nuclear Dockyard Workers, Nature, 277, 531-534, 1979.

FRC67 Federal Radiation Council, Radiation Guidance for Federal Agencies, Memorandum for the President, July 21, 1967, Fed. Reg., 32, 1183-84, August 1, 1967.

Ga82 Garriott, M.L. and D. Grahn, Neutron and Gamma-Ray Effects Measured by the Micronucleus Test, Mut. Res. Let., 105, 157-162, 1982.

Gi84 Gilbert, E.S., Some Effects of Random Dose Measurements Errors on Analyses of Atomic Bomb Survivor Data, Rad. Res., 98, 591-605, 1984.

Gi85 Gilbert, E.S., Late Somatic Effects, in: Health Effects Model for Nuclear Power Plant Accident Consequence Analysis by J.S. Evans, D.W. Cooper and D.W. Moeller, NUREG/CR-4214, U.S. Nuclear Regulatory Commission, 1985.

Go29 Goldstein, L. and D.P. Murphy, Etiology of Ill-health of Children Born After Maternal Pelvic Irradiation: II, Defective Children Born After Post Conception Pelvic Irradiation, Amer. J. Roentgenol. Rad. Ther., 22: 322-331, 1929.

Go80 Goodhead, D.T., Models of Radiation Interaction and Mutagenesis, pp. 231-247, in Radiation Biology in Cancer Research, R.E. Meyn and H. R. Withers, eds., Raven, New York, 1980.

Go82 Goodhead, D.T., An Assessment of the Role of Microdosimetry in Radiobiology, Rad. Res., 91, 45-76, 1982.

Gr83a Grahn, D., et al., Interpretation of Cytogenetic Damage Induced in the Germ Line of Male Mice Exposed for Over 1 Year to ^{239}Pu Alpha Particles, Fission Neutrons, or ^{60}Co Gamma Rays, Rad. Res., 95, 566-583, 1983.

Gr83b Grahn, D., Genetic Risks Associated with Radiation Exposures During Space Flight, Adv. Space Res., 3(8), 161-170, 1983.

Gr85 Grosovsky, A.J. and J.B. Little, Evidence for Linear Response for the Induction of Mutations in Human Cells by X-Ray Exposures below 10 Rads, Proc. Natl. Acad. Sci. USA, 82, 2092-2095, 1985.

Gu77a Gustavson, K.H, Hagberg, B., Hagberg, G. and K. Sars, Severe Mental Retardation in a Swedish County, I, Epidemiology, Gestational Age, Birth Weight and Associated CNS Handicaps in Children Born 1959-70, Acta Paediatr. Scand., 66, 373-379, 1977.

Gu77b Gustavson, K.-H., Hagberg, B., Hagberg, G. and K. Sars, Severe Mental Retardation in a Swedish County, II. Etiologic and Pathogenetic Aspects of Children Born 1959-70, Neuropadiatrie, 8:293-304, 1977.

Ha81a Hagberg, B., Hagberg, G., Lewerth, A. and U. Lindberg, Mild Mental Retardation in Swedish School Children, I. Prevalence, Acta Paediatr. Scand., 70, 441-444, 1981.

Ha81b Hagberg, B., Hagberg, G., Lewerth, A. and U. Lindberg, Mild Mental Retardation in Swedish School Children, II. Etiologic and Pathogenetic Aspects, Acta Paediatr. Scand., 70:445-452, 1981.

Ha82 Harley, N.H. and B.S. Pasternak, Environmental Radon Daughter Alpha Dose Factors in a Five-Lobed Human Lung, Health Phys., 42, 789-799, 1982.

He83 Herbert, D.E., Model or Metaphor? More Comments on the BEIR III Report, pp. 357-390, in Epidemiology Applied to Health Phys., CONF--830101, DE-83014383, NTIS, Springfield, Virginia, 1983.

Hi53 Hicks, S.P., Developmental Malformations Produced by Radiation, A Timetable of Their Development, Amer. J. Roentgenol. Radiat. Thera., 69, 272-293, 1953.

Hi54 Hicks, S.P., The Effects of Ionizing Radiation, Certain Hormones, and Radiomimetic Drugs on the Developing Nervous System, J. Cell. Comp. Physiol., 43 (Suppl. 1), 151-178, 1954.

Hi66 Hicks, S.P. and C.J. D'Amato, Effects of Ionizing Radiations on Mammalian Development, Adv. Teratol., 1, 195-266, 1966.

Ho77 Hofmann, W. and F. Steinhausler, Dose Calculations for Infants and Youths Due to the Inhalation of Radon and Its Decay Products in the Normal Environment, in: Proceedings of the 4th International Congress of the International Radiation Protection Association, Paris, 2, 497-500, 1977.

Ho81 Hornung, R. W. and S. Samuels, Survivorship Models for Lung Cancer Mortality in Uranium Miners - Is Cumulative Dose an Appropriate Measure of Exposure?, in: Proc. Int. Conf. on Hazards in Mining: Control, Measurement, and Medical Aspects, October 4-9, 1981, Golden, Colorado, 363-368, edited by Manuel Gomez, Society of Mining Engineers, New York, 1981.

Ho84 Howe, G.R., Epidemiology of Radiogenic Breast Cancer, in: Radiation Carcinogenesis: Epidemiology and Biological Significance, 119-129, edited by J.D. Boice, Jr. and J.F. Fraumeni, Jr., Raven Press, New York, 1984.

Ho86 Howe, G.R., Nair, R.C., Newcomb, H.B., Miller, A.B. and J.D. Abbatt, Lung Cancer Mortality (1950-1980) in Relation to Radon Daughter Exposure in a Cohort of Workers at the Eldorado Beaver Lodge Uranium Mine, JNCI, 77, 357-362, 1986.

Ho87 Howe, G.R, Nair, R.C, Newcombe, H.B, Miller, A.B,Burch, J.D and Abbott, J.D. Lung Cancer Mortality (1950-80) in Relation to Radon Daughter Exposure in a Cohort of Workers at the Eldorado Port Radium Uranium Mine: Possible Modification of Risk by Exposure Rate. JNCI, 79: 1255-1260 (1987).

HWC73 Health and Welfare Canada, The Testing of Chemicals for Carcinogenicity, Mutagenicity and Teratogenicity, Health Protection Branch, HWC, Ottawa, 1973.

ICRP75 International Commission on Radiological Protection, Committee II on Permissible Dose for Internal Radiation, Task Group on Reference Man, ICRP Publ. 23, Pergamon Press, 1975.

ICRP77 International Commission on Radiological Protection, Recommendations of the International Commission on Radiological Protection, ICRP Publ. 26, Ann. ICRP, 1, (1), Pergamon Press, 1977.

ICRP79 International Commission on Radiological Protection, Limits for Intakes of Radionuclides by Workers, ICRP Publication 30, Part 1, Ann. ICRP, 2 (3/4), Pergamon Press, New York, 1979.

ICRP80 International Commission on Radiological Protection, Effects of Inhaled Radionuclides, ICRP Publication 31, Pergamon Press, 1980.

ICRP81 International Commission on Radiological Protection, Limits for Intakes of Radionuclides by Workers, ICRP Publication 32, Part 3, Ann. ICRP, 6 (2/3), Pergamon Press, 1981.

ICRP87 International Commission on Radiological Protection, Lung Cancer Risk from Indoor Exposures to Radon Daughters, ICRP Publication 50, Pergamon Press, NY, 1987.

Is84 Ishimaru, T., Nakashima, E. and S. Kawamoto, Relationship of Height, Body Weight, Head Circumference and Chest Circumference to Gamma and Neutron Doses Among In Utero Exposed Children, Hiroshima and Nagasaki. Technical Report RERF TR 19-84, Radiation Effects Research Foundation, Hirsohima, 1984.

Ja80 Jacobi, W. and K. Eisfeld, Dose to Tissue and Effective Dose Equivalent by Inhalation of Radon-222 and Radon-220 and Their Short-Lived Daughters, GFS Report S-626, Gesellschaft fuer Strahlen und Unweltforschung mbH, Munich, 1980.

Ja85 Jacobi W., Paretzke H. G. and Schindel F., Lung Cancer Risk Assessment of Radon-Exposed Miners on the Basis of a Proportional Hazard Model, in: Occupational Radiation Safety in Mining, Volume 1, H. Stocker, editor, Canadian Nuclear Association, Toronto, Ontario, Canada, pp. 17-24, 1985.

Ja70 Jacobsen, L., Radiation Induced Fetal Damage, Adv. Teratol., 4, 95-124, 1970.

Ja81 James, A. C. et al., Respiratory Tract Dosimetry of Radon and Thoron Daughters: The State-of-the-Art and Implications for Epidemiology and Radiobiology, in: Proc. Int. Conf. on Hazards in Mining: Control, Measurement, and Medical Aspects, October 4-9, 1981, Golden, Colorado, 42-54, edited by Manuel Gomez, Society of Mining Engineers, New York, 1981.

Ka73 Kato, H., Late Effects in Children Exposed to the Atomic Bomb While In Utero, Technical Report 18-73, Atomic Bomb Casualty Commission, Hiroshima, 1973.

Ka82 Kato, H. and W.J. Schull, Studies of the Mortality of A-bomb Survivors, 7. Mortality, 1950-1978: Part I, Cancer Mortality, Rad. Research 90, 395-432, 1982, (Also published by the Radiation Effect Research Foundation as: RERF TR 12-80, Life Span Study Report 9, Part 1.)

Ka89 Kaul, D.C., Uncertainty Analysis of DS86 Dosimetry System, RERF Update 1 (2), 4, 1989.

Ke72 Kellerer, A.M. and H.M. Rossi, The Theory of Dual Radiation Action, Curr. Topics Rad., Res. Quart., 8, 85-158, 1972.

Ke81a Kerr, G.D., Review of Dosimetry for the Atomic Bomb Survivors, in: Proceedings of the Fourth Symposium on Neutron Dosimetry, Gessellschaft fur Strahlen- und Umweltforschung, Munich-Neuherberg, Federal Republic of Germany, June 1-5, 1, 501, Office for Official Publications of the European Communities, Luxembourgh, 1981.

Ke81b Kerr, G.D., Findings of a Recent ORNL Review of Dosimetry for the Japanese Atomic Bomb Survivors, ORNL/TM-8078, Oak Ridge National Laboratory, Oak Ridge, Tennessee, 1981.

Ki62 King, R.C., Genetics, Oxford University Press, New York, 1962.

La78 Land, C.E. and J.E. Norman, Latent Periods of Radiogenic Cancers Occurring Among Japanese A-bomb Survivors, in: Late Biological Effects of Ionizing Radiation, I, 29-47, IAEA, Vienna, 1978.

La80 Land, C.E., Boice, J.D., Shore, R.E., Norman, J.E. and M. Tokunaga, et al., Breast Cancer Risk from Low-Dose Exposures to Ionizing Radiation: Results of Parallel Analysis of Three Exposed Populations of Women, J. Natl. Canc. Inst., 65, 353-376, 1980.

La83 Land, C.E. and D.A. Pierce, Some Statistical Considerations Related to the Estimation of Cancer Risk Following Exposure to Ionizing Radiation, pp. 67-89, in Epidemiology Applied to Health Phys., CONF-830101, DE83014383, NTIS, Springfield, Virginia, 1983.

Le62 Lea, D.E., Actions of Radiations on Living Cells, 2nd edition, Cambridge University Press, 1962.

Lo81 Loewe, W.E. and E. Mendelsohn, Revised Dose Estimates at Hiroshima and Nagasaki, Health Phys., 41, 663-666, 1981.

Lu71 Lundin, F E Jr., Wagoner, J K and Archer, V E Radon Daughter Exposure and Respiratory Cancer. Quantitative and Temporal Aspects, Joint Monograph No. 1, N10SH-NIEHS, USPHS, DHEW, Washington, DC, 1971.

Ma59 Mandansky, A., The Fitting of Straight Lines When Both Variables Are Subject to Error, J. Amer. Statis. Assoc., 54, 173-205, 1959.

Ma83 Mays, C.W. and H. Spiess, Epidemiological Studies in German Patients Injected with Ra-224, pp. 159-266, in: Epidemiology Applied to Health Physics, CONF-830101, DE-83014383, NTIS, Springfield, Virginia, 1983.

Mc78 McDowell, E.M., McLaughlin, J.S., Merenyi, D.K., Kieffer, R.F., Harris, C.C. and B.F. Trump, The Respiratory Epithelium V. Histogenesis of Lung Carcinomas in Humans, J. Natl. Cancer Inst., 61, 587-606, 1978.

Mi78 Michel C. and H. Fritz-Niggli, Radiation-Induced Developmental Anomalies in Mammalian Embryos by Low Doses and Interaction with Drugs, Stress and Genetic Factors, pp. 399-408, in: Late Biological Effects of Ionizing Radiation, Vol. II, IAEA, Vienna, 1978.

Mi59 Miller, R.W., Delayed Effects Occurring Within the First Decade After Exposure of Young Individuals to the Hiroshima Atomic Bomb, Technical Report 32-59, Atomic Bomb Casualty Commission, Hiroshima, 1959.

Mi72 Miller, R.W. and W.J. Blot, Small Head Size Following In Utero Exposure to Atomic Radiation, Hiroshima and Nagasaki, Technical Report 35-72, Atomic Bomb Casualty Commission, Hiroshima, 1972.

Mo67 Morgan, K.Z. and J.E. Turner, Principles of Radiation Protection, John Wiley and Sons, Inc., New York, 1967.

Mo79 Mole, R.H., Carcinogenesis by Thorotrast and Other Sources of Irradiation, Especially Other Alpha-Emitters, Environ. Res., 18, 192-215, 1979.

Mu29 Murphy, D.P., The Outcome of 625 Pregnancies in Women Subject to Pelvic Radium or Roentgen Irradiation, Amer. J. Obstet. Gyn., 18, 179-187, 1929.

Mu30 Murphy, D.P. and M. DeRenyi, Postconception Pelvic Irradiation of the Albino Rat (Mus Norvegieus): Its Effects Upon the Offspring, Surg. Gynecol. Obstet., 50, 861-863, 1930.

Mu83 Muller, J., Wheeler, W.C., Gentleman, J.F., Suranyi, G. and R.A. Kusiak, Study of Mortality of Ontario Miners, 1955-1977, Part I, Ontario Ministry of Labor, Ontario, May 1983.

NAS72 National Academy of Sciences - National Research Council, The Effects on Populations of Exposures to Low Levels of Ionizing Radiation, Report of the Committee on the Biological Effects of Ionizing Radiations (BEIR I Report), Washington, D.C., 1972.

NAS80 National Academy of Sciences - National Research Council, The Effects on Populations of Exposure to Low Levels of Ionizing Radiation, Committee on the Biological Effects of Ionizing Radiation, (BEIR III), Washington, D.C., 1980.

NAS88 National Academy of Sciences - National Research Council,. Health Risks of Radon and Other Internally Deposited Alpha-Emitters, BEIR IV, National Academy Press, Washington, DC, 1988.

NASA73 National Aeronautics and Space Administration, Bioastronautics Data Book, NASASP-3006, 2nd Edition, edited by J. R. Parker and V. R. West, Washington, D.C., 1973.

NCHS73 National Center for Health Statistics, Public Use Tape, Vital Statistics - Mortality Cause of Death Summary - 1970, PB80-133333, Washington, D.C., 1973.

NCHS75 National Center for Health Statistics, U.S. Decennial Life Tables for 1969-71, 1(1), DHEW Publication No. (HRA) 75-1150, U.S. Public Health Service, Rockville, Maryland, 1975.

NCRP75 National Council on Radiation Protection and Measurement, Natural Background Radiation in the United States, NCRP Report No. 45, Washington, D.C., 1975.

NCRP77 National Council on Radiation Protection and Measurements, Protection of the Thyroid Gland in the Event of Releases of Radioiodine, Report No. 55, Washington, D.C., 1977.

NCRP80 National Council on Radiation Protection and Measurements, Influence of Dose and Its Distribution in Time on Dose-Response Relationships for Low-LET Radiation, NCRP Report No. 64, Washington, D.C., 1980.

NCRP84 National Council on Radiation Protection and Measurements, Evaluation of Occupational and Environmental Exposures to Radon and Recommendations, NCRP Report No. 78, Washington, D.C., 1984.

NCRP85 National Council on Radiation Protection and Measurements, Induction of Thyroid Cancer by Ionizing Radiation, NCRP Report No. 80, Washington, D.C., 1985.

NCRP87 National Council on Radiation Protection and Measurements, Ionizing Radiation Exposure of the Population of the United States, NCRP Report No. 93, Bethesda, MD, 1987.

Ne56 Neel, J.V. and W.J. Schull, The Effect of Exposure to the Atomic Bombs on Pregnancy Termination in Hiroshima and Nagasaki, National Academy of Sciences, Publ. 461, Washington, D.C., 1956.

Ne70 Nelson, K.B. and J. Deutschberger, Head Size at One Year as a Predictor of Four-Year I.Q., Develop. Med. Child Neurol., 12, 487-495, 1970.

Ne86 Nero, A.V., Schwehr, M.B., Nazaroff, W.W. and K.L. Revzan, Distribution of Airborne Radon-222 Concentrations in U.S. Homes, Science, 234, 992-997, 1986.

Ne88 Neel, J. V., Schull, W. J., Awa, A. A., Satoh, C., Otake, M., Kato, H, and Yoshimato, Y., Implications of the Hiroshima - Nagasaki Genetic Studies for the Estimation of the Human "Doubling Dose" of Radiation. Presentation at XVI the International Congress of Genetics, Toronto, 1988.

NIH85 National Institutes of Health, Report of the National Institutes of Health Ad Hoc Working Group to Develop Radioepidemiological Tables, NIH Publication No. 85-2748, U.S. Government Printing Office, Washington, DC 20402, p 92, 1985.

NIOSH87 National Institute for Occupational Safety and Health. Radon Progeny in Underground Mines, DHHS (NIOSH) Publication NO. 88-101, USPHS, CDC, NIOSH, Cincinnati, Ohio, 1987

NRC85 Nuclear Regulatory Commission, Health Effects Model for Nuclear Power Plant Accident Consequence Analysis. NUREG/CR-4214. U.S. Nuclear Regulatory Commission, Washington, DC, 1985.

ORNL84 Oak Ridge National Laboratory, Age Dependent Estimation of Radiation Dose, [in press], 1984.

Of80 Oftedal, P. and A.G. Searle, An Overall Genetic Risk Assessment for Radiological Protection Purposes, J. Med. Genetics, 17, 15-20, 1980.

Oh65 Ohzu, E., Effects of Low-Dose X-Irradiation on Early Mouse Embryos, Rad. Res. 26, 107-113, 1965.

Ot83 Otake, M. and W.H. Schull, Mental Retardation in Children Exposed In Utero to the Atomic Bombs: A Reassessment, Technical Report RERFTR 1-83, Radiation Effects Research Foundation, Hiroshima, 1983.

Ot84 Otake, M. and W.J. Schull, In Utero Exposure to A-bomb Radiation and Mental Retardation: A Reassessment, Brit. J. Radiol., 57, 409-414, 1984.

Ot88 Otake, M., W.J. Schull, Y. Fujikoshi, and H. Yoshimaru. Effect on School Performance of Prenatal Exposure to Ionizing Radiation: A Comparison of the T65DR and DS86 Dosimetry Systems. Technical Report RERF TR 2-88, Radiation Effects Research Foundation, Hiroshima, 1988.

Pi89 Pierce, D.A., Stram, D.O. and M. Vaeth, Allowing for Random Errors in Radiation Exposure Estimates for the Atomic Bomb Survivor Data, RERF TR 2-8, Radiation Effects Research Foundation, Hiroshima, 1989.

Pl52 Plummer, G.W., Anomalies Occurring in Children Exposed In Utero to the Atomic Bomb in Hiroshima, Pediat., 10, 687-692, 1952.

Po78 Pohl-Ruling, J., Fischer, P. and E. Pohl, The Low-Level Shape of Dose Response for Chromosome Aberration, pp. 315-326, in: Late Biological Effects of Ionizing Radiation, Volume II, International Atomic Energy Agency, Vienna, 1978.

Pr83 Prentice, R.L., Yoshimoto, Y. and M.W. Mason, Relationship of Cigarette Smoking and Radiation Exposure to Cancer Mortality in Hiroshima and Nagasaki, J. Nat. Cancer Inst., 70, 611-622, 1983.

Pr87 Preston, D.L. and D.A. Pierce, The Effect of changes in Dosimetry on Cancer Mortality Risk Estimates in the Atomic Bomb Survivors. RERF 9-87, Radiation Effects Research Foundation, Hiroshima, 1987.

Pr88 Preston, D.L. and D.A. Pierce, The Effect of Changes in Dosimetry on Cancer Mortality Risk Estimates in the Atomic Bomb Survivors, Rad. Res. 114, 437-466, 1988.

Ra84 Radford, E.P. and K.G. St. Cl. Renard, Lung Cancer in Swedish Iron Miners Exposed to Low Doses of Radon Daughters, N. Engl. J. Med., 310, 1485-1494, 1984.

RERF78 Radiation Effects Research Foundation. Radiation Effects Research Foundation, 1 April 1975 - 31 March 1978. RERF Report 75-78, Hiroshima, 1978.

RERF83 Radiation Effects Research Foundation, Reassessment of Atomic Bomb Radiation Dosimetry in Hiroshima and Nagasaki, Proc. of the U.S.-Japan Joint Workshop, Nagasaki, Japan, Feb. 16-17, 1982, Radiation Effects Research Foundation, Hiroshima, 730, Japan, 1983.

RERF84 Radiation Effects Research Foundation, Second U.S.-Japan Joint Workshop for Reassessment of Atomic Bomb Radiation Dosimetry in Hiroshima and Nagasaki, Radiation Effects Research Foundation, Hiroshima, 730, Japan, 1984.

Ro78 Rossi, H.H. and C.W. Mays, Leukemia Risk from Neutrons, Health Phys., 34, 353-360. 1978.

Ro78 Rowland, R.E., Stehney, A.F. and H.F. Lucas, Dose Response Relationships for Female Radium Dial Workers, Rad. Res., 76, 368-383, 1978.

Ru50 Russell, L.B., X-ray Induced Developmental Abnormalities in the Mouse and Their Use in the Analysis of Embryological Patterns, I. External and Gross Visceral Changes, J. Exper. Zool., 114, 545-602, 1950.

Ru53 Rugh, R., Vertebrate Radiobiology: Embryology, Ann. Rev. Nucl. Sci., 3, 271-302, 1953.

Ru54 Russell, L.B. and W.L. Russell, An Analysis of the Changing Radiation Response of the Developing Mouse Embryo, J. Cell. Comp. Physiol., 43 (Suppl. 1), 103-149, 1954.

Ru56 Russell, L.B., X-Ray Induced Developmental Abnormalities in the Mouse and Their Use in the Analysis of Embryological Patterns, II. Abnormalities of the Veretebral Column and Thorax, J. Exper. Zool., 131, 329-390, 1956.

Ru57 Russell, L.B., Effects of Low Doses of X-rays on Embryonic Development in the Mouse, Proc. Soc. Exptl. Biol. Med., 95, 174-178, 1957.

Ru58 Russell, W.L., Russell, L.B. and E.M. Kelly, Radiation Dose Rate and Mutation Frequency, Science, 128:1546-1550, 1958.

Ru70 Rugh, R., The Effects of Ionizing Radiation on the Developing Embryo and Fetus, Seminar Paper No. 007, Bureau of Radiological Health Seminar Program, U.S. Public Health Service, Washington, D.C., 1970.

Ru71 Rugh, R., X-ray Induced Teratogenesis in the Mouse and Its Possible Significance to Man, Radiol., 99, 433-443, 1971.

Sa82 Satoh, C. et al., Genetic Effects of Atomic Bombs, in: Human Genetics, Part A: The Unfolding Genome, A. R. Liss, Inc., New York, 267-276, 1982.

Sc81 Schull, W.J., Otake, M. and J.V. Neel, Genetic Effects of the Atomic Bombs: A Reappraisal, Science, 213, 1220-1227, 1981.

Sc82 Schwarz, G., and Dunning, Jr., D.E., Imprecision in Estimates of Dose from Ingested Cs-137 due to Variability in Human Biological Characteristics, Health Phys. 43, 631-645, 1982.

Sc84 Schull, W.J. and J.K. Bailey, Critical Assessment of Genetic Effects of Ionizing Radiation on Pre- and Postnatal Development, pp. 325-398, in: Issues and Reviews in Teratology, Volume 2, H. Kalter, editor. Plenum Press, New York, 1984.

Sc88 Schull, W.J., M. Otaki, and H. Yoshimaru. Effects on Intelligence Test Score of Prenatal Exposure to Ionizing Radiation in Hiroshima and Nagasaki: A Comparison of the T65DR and DS86 Dosimetry Systems. Technical Report RERF TR 3-88, Radiation Effects Research Foundation, Hiroshima, 1988.

Se69 Senyszyn, J.J. and R. Rugh, Hydrocephaly Following Fetal X-Irradiation, Radiol., 93, 625-634, 1969.

Se88 Sevc, J, Kunz, E, Tomasek, L, Placek, V, and Horacek, J Cancer in Man after Exposure to Rn Daughters, Health Physics, 54: 27-46 (1988).

Sh87 Shimizu, Y., Kato, H., Schull, W.J., Preston, D.L., Fujita, S. and Pierce, D.A., Life Span Study Report 11. Part I. Comparison of Risk Coefficients for Site-Specific Cancer Mortality Based on DS86 and T65DR Shielded Kerma and Organ Doses, RERF TR 12-87, Radiation Effects Research Foundation, Hiroshima, 1987. Also published as Rad. Res. 118, 502-524, 1989.

Sh88 Shimuzu, Y, Kato, H. and W.J. Schull, Life Span Study Report 11. Part 2. Cancer Mortality in the Years 1950-85 Based on the Recently Revised Doses (DS86), RERF TR 5-88, Radiation Effects Research Foundation, Hiroshima, 1988.

Sm78 Smith, P.G. and R. Doll, Radiation-Induced Cancers in Patients with Ankylosing Spondylitis Following a Single Course of X-ray Treatment, in: Proc. of the IAEA Symposium, Late Biological Effects of Ionizing Radiation, 1, 205-214, IAEA, Vienna, March 1978.

Sp56 Spector, W.S., editor, Handbook of Biological Data, Table 314, Energy Cost, Work: Man, W. B. Sanders Co., Philadelphia, 1956.

Sp83 Spiers, F.W., Lucas, H.F., Rundo, J. and G.A. Anast, Leukemia Incidence in the U.S. Dial Workers, in: Conference Proc. on Radiobiology of Radium and the Actinides in Man, October 11-16, 1981, Health Phys., 44(Suppl. 1):65-72, 1983.

St21 Stettner, E., Ein weiterer Fall einer Schadingung einer menschichen Frucht durch Roentgen Bestrahlung., Jb. Kinderheilk. Phys. Erzieh., 95, 43-51, 1921.

St81 Straume, T. and R. L. Dobson, Implications of New Hiroshima and Nagasaki Dose Estimates: Cancer Risks and Neutron RBE, Health Phys., 41(4):666-671, 1981.

St84 Stein, Z.A. and M.W. Susser, The Epidemiology of Mental Retardation, in: Epidemiology of Pediatric Neurology, B. Schoenberg, editor, Marcel Dekker, Inc., New York, [in press], 1984.

St85 Steinhausler F., and Hofmann W., Inherent Dosimetric and Epidemiological Uncertainties Associated with Lung Cancer Risk Assessment in Mining Populations, in: Occupational Radiation Safety in Mining, Volume 1, H. Stocker, editor, Canadian Nuclear Association, Toronto, Ontario, Canada, pp. 327-334, 1985.

St88 Stather, J.W., C.R. Muirhead, A.A. Edwards, J.D. Harrison, D.C. Lloyd, and N.R. Wood. Health Effects Models Developed from the 1988 UNSCEAR Report. NRPB-R226. National Radiation Protection Board, Chilton, England, 1988.

Ta67 Tabuchi, A., Hirai, T., Nakagawa, S., Shimada, K. and J. Fugito, Clinical Findings on In Utero Exposed Microcephalic Children, Technical Report 28-67, Atomic Bomb Casualty Commission, Hiroshima, 1967.

Th82 Thomas, D.C. and K.G. McNeill, Risk Estimates for the Health Effects of Alpha Radiation, Report INFO-0081. Atomic Energy Control Board, Ottawa, 1982.

To80 Tobias, C. A., Blakely, E.A., Ngo, F.Q.H. and T.C.H. Yang, The Repair-Misrepair Model, pp. 195-230, in: Radiation Biology and Cancer Research, R. E. Meyn and H. R. Withers, eds., Raven, New York, 1980.

To84 Tokunaga, M., Land, C.E., Yamamoto, T., Asano, M., Takioka, S., Ezaki, E. and I. Nishimari, Incidences of Female Breast Cancer Among Atomic Bomb Survivors, Hiroshima and Nagasaki, 1950-1980, RERF TR 15-84, Radiation Effects Research Foundation, Hiroshima, 1984.

Ul82 Ullrich, R.L., Lung Tumor Induction in Mice: Neutron RBE at Low Doses, NTIS-DE 82009642, National Technical Information Service, Springfield, Virginia, 1982.

UNSCEAR58 United Nations, Report of the United Nations Scientific Committee on the Effects of Atomic Radiation, Official Records: Thirteenth Session, Supplement No. 17 (A/3838), United Nations, New York, 1958.

UNSCEAR62 United Nations, Report of the United Nations Scientific Committee on the Effects of Atomic Radiation, Official Records: Seventeenth Session, Supplement No. 16 (A/5216), United Nations, New York, 1962.

UNSCEAR66 United Nations, Report of the United Nations Scientific Committee on the Effects of Atomic Radiation, Official Records: Twenty-First Session, Supplement No. 14 (A/6314), United Nations, New York, 1966.

UNSCEAR69 United Nations, Report of the United Nations Scientific Committee on the Effects of Atomic Radiation, Supplement No. 13 (A/7613), United Nations, New York, 1969.

UNSCEAR72 United Nations Scientific Committee on the Effects of Atomic Radiation, Ionizing Radiation: Levels and Effects, Volume II: Effects, Report to the General Assembly. Sales No. E. 72. IX.18., United Nations, New York, 1972.

UNSCEAR77 United Nations Scientific Committee on the Effects of Atomic Radiation, Sources and Effects of Ionizing Radiation, Report to the General Assembly, with Annexes, Sales No. E.77 IX.1., United Nations, New York, 1977.

UNSCEAR82 United Nations Scientific Committee on the Effects of Atomic Radiation, Ionizing Radiation: Sources and Biological Effects, 1982 Report to the General Assembly, Sales No. E.82. IX.8, United Nations, New York, 1982.

UNSCEAR86 United Nations Scientific Committee on the Effects of Atomic Radiation, Genetic and Somatic Effects of Ionizing Radiation, 1986 Report to the General Assembly, Sales No. #. 86 IX. 9, United Nationa, New York, 1986.

UNSCEAR88 United Nations Scientific Committee on the Effects of Atomic Radiation, Sources, Effects and Risks of Ionization Radiation, 1988 Report to the General Assembly, Sales No. #. 88. IX. 7, United Nationa, New York, 1988.

Up75 Upton, A.C., Physical Carcinogenesis: Radiation--History and Sources, pp. 387-403, in: Cancer 1, F.F. Becker, editor. Plenum Press, New York, 1975.

USRPC80 U.S.Radiation Policy Council, Report of the Task Force on Radon in Structures, USRPC-80-002, Washington, D.C., 1980.

Va80 Van Buul, P.P.W., Dose-response Relationship for X-ray Induced Reciprocal Translocations in Stem Cell Spermatogonia of the Rhesus Monkey (Macaca mulatta), Mutat. Res., 73, 363-375, 1980. (Cited in UNSCEAR82.)

Vo02 Von Frieben, A., Demonstration lines cancroids des rechten Handruckens das sich nach lang dauernder Einwirkung von Rontgenstrahlen entwickelt hatte. Fortschr. Geb. Rontgenstr., 6:106 (1902) cited in Up75.

Wh83 Whittemore, A.S. and A. McMillan, A Lung Cancer Mortality Among U.S. Uranium Miners: A Reappraisal, Technical Report No. 68, SIAM Inst. Math. Soc., Stanford University, Stanford, 1983.

WHO75 World Health Organization, International Statistical Classification of Diseases, Injuries, and Causes of Death, 9th Revision, Geneva, 1975.

Wi54 Wilson, J.G., Differentiation and the Reaction of Rat Embryos to Radiation, J. Cell. Comp. Physiol., 43 (Suppl. 1), 11-37, 1954.

Wo65 Wood, J.W., Johnson, K.G. and Y. Omari, In Utero Exposure to the Hiroshima Atomic Bomb: Follow-up at Twenty Years, Technical Report 9-65, Atomic Bomb Casualty Commission, Hiroshima, 1965.

Wo66 Wood, J.W., Johnson, K.G., Omari, Y., Kawamoto, S. and R.J. Keehn, Mental Retardation in Children Exposed In Utero to the Atomic Bomb--Hiroshima and Nagasaki, Technical Report 10-66, Atomic Bomb Casualty Commission, Hiroshima, 1966.

000207

7. AN ANALYSIS OF UNCERTAINTIES IN RISKS FOR SOME SELECTED SITES

7.1 INTRODUCTION

Volume II of this Background Information Document (BID) presents estimates of the risks attributable to radionuclides released to the air from various facilities and categories of facilities. The risks were estimated using data characterizing airborne emissions and the models and assumptions described in Chapters 4, 5, and 6. The results of the analyses provided in Volume II are fatal cancer risks, expressed in terms of the additional lifetime risk to individuals and the number of additional cancer fatalities in the exposed populations.

Rather than using mathematical models to assess impacts, one would prefer to measure the actual impacts directly; i.e., radionuclide concentrations and radiation fields in the environment and radionuclide concentrations in the various organs of the exposed populations. However, this is seldom possible because the radionuclide releases do not generally result in detectable levels of radionuclides in the environment or in the exposed members of the population. In addition, any additional theoretical cancers that may be attributable to radionuclide exposures cannot be detected in the presence of the large numbers of cancers endemic in any population. Accordingly, the actual or potential impacts of the emissions must be estimated using mathematical models.

The risk estimates for each category provided in Volume II are presented as discrete values. Each of these calculated values is an expression of impact on an individual or small group of individuals or on a population as a whole. These values are intended to be reasonable best estimates of risk; that is, to not significantly underestimate or overestimate risks and be of sufficient accuracy to support decisionmaking. However, because each facility is unique, the models used to calculate risk are generalizations and simplifications of the processes which result in exposure and risk. In addition, the ability to model the processes is also limited by the availability of data characterizing each site and the understanding of the processes. As a result, the estimates of dose and risk have a considerable degree of uncertainty.

Because of these uncertainties, the values presented are of more use to decisionmakers when there is some characterization of their uncertainty. For example, a calculated risk may be small, e.g., 10^{-6} lifetime risk of cancer for an individual. If the uncertainty in this number is several orders of magnitude, the real risk of this source of emission may in fact be higher than another source of emission which has a calculated risk of 10^{-5} lifetime risk of cancer but a small degree of uncertainty. Alternatively, a risk of 10^{-2} calculated using upper bound techniques may appear to represent an unacceptable risk.

However, a central estimate of the risk may be several orders of magnitude smaller.

This situation may occur when, due to limited information and uncertainty in the calculational parameters, conservative assumptions are used throughout the calculation in order to ensure that the risks are not underestimated. This can result in a risk estimate that is near the upper limit of what is plausible because it is based on a very unlikely combination of conservative assumptions. Quantitative uncertainty analysis can provide results that indicate the likelihood of realizing different risk levels across the range of uncertainty. This type of information is very useful for incorporating acceptable and reasonable confidence levels into decisions.

The Office of Radiation Programs has initiated a program to analyze the uncertainty in the risk estimates. This chapter summarizes the quantitative uncertainty analysis performed in support of some selected risk estimates provided in Volume II. An assessment is provided of the uncertainty in estimating the best estimate of the lifetime fatal cancer risk to members of the general population that reside at locations which tend to maximize risk. These individuals are referred to as "maximum individuals." A detailed description of the mathematical models and calculational assumptions used in the uncertainty analysis is provided in SCA89.

7.2 GENERAL APPROACH

7.2.1 Application of Uncertainty Analysis to Environmental Risk Assessment

The use of quantitative uncertainty analysis to address environmental risks became widespread following the Reactor Safety Study (NRC75), and in 1984 was recommended by the Agency in support of environmental risk assessments (EPA84). The technique results in a range of values of impact rather than a single discrete value by using a range of values for the calculational input parameters. In this way, the impacts of a given technological activity can be bounded and different technologies can be intercompared. In cases where probability distributions can be assigned to the set of calculational model parameters, the model results can also be expressed as probability distributions. Figure 7-1 is an example of the output of such an analysis. The results are expressed as a cumulative probability distribution. Inspection of the distribution reveals that, in this case, there is a high level of confidence that the technological activity will result in a lifetime fatal risk of cancer of 10^{-4}, and that the median risk estimate (i.e., the 50th percentile value) is about 5×10^{-5}.

000209

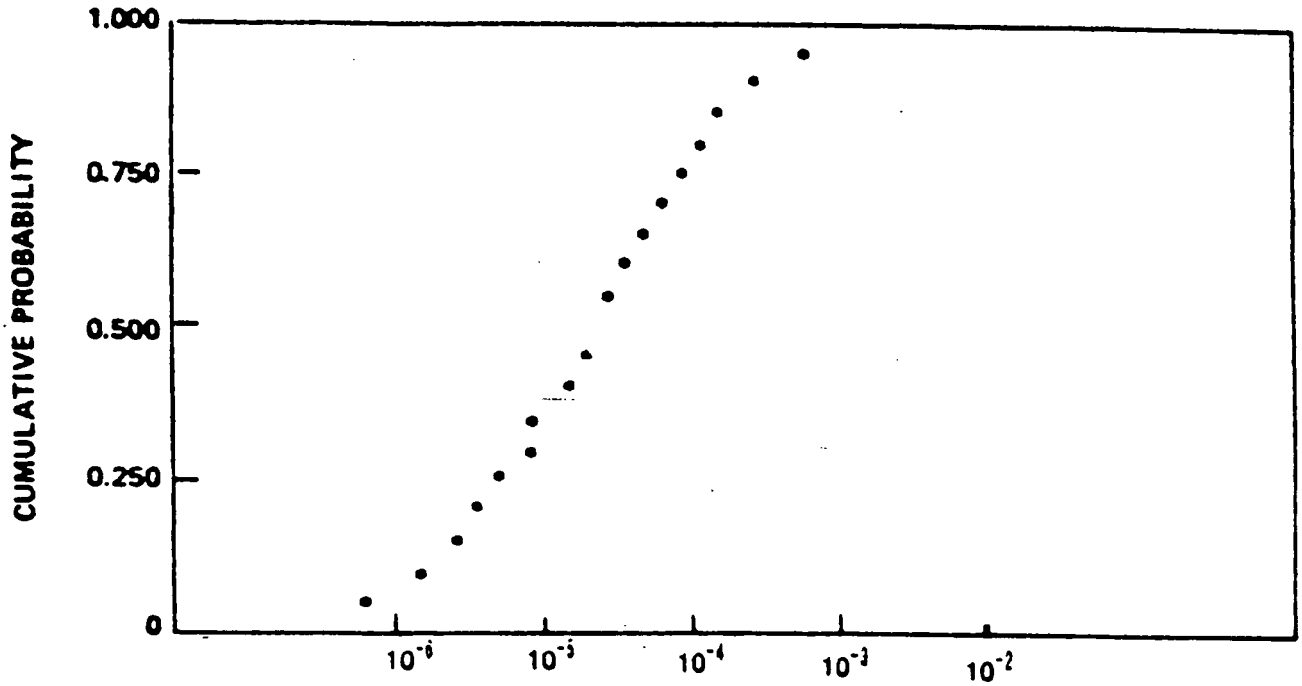

Figure 7-1. Example of the output of a risk assessment using quantitative uncertainty analysis.

It is important to understand that distributions of parameters and the calculated risks are not rigorously based on objective observations, but are an attempt to include the judgement of those who chose them so as to reasonably encompass their uncertainties. As a result, the probability of a given risk as calculated using these techniques should not be considered rigorous estimates of the actual values, but rather the results of using the calculational models for sets of parameters with the prescribed uncertainties.

Selected uncertainty analyses, which are especially relevant, include work performed by Hoffman (HO79, HO82, HO83, HO83a, HO88), Rish (RI83, RI88), and Crick (CR88).

7.2.2 Design of the Uncertainty Analysis

A review was performed of previous uncertainty analyses and guidance documents (HO83, HO88, RI88, and CR88) to identify the approach that most appropriately applies to the analyses presented in Volume II. The review addressed the extent of the analysis required and the alternative analytical techniques available to support the analyses. In addition, an evaluation was performed to determine if all 12 source categories required an uncertainty analysis, or whether a limited number of selected categories could be used to characterize the overall uncertainty.

7.2.2.1 Extent of the Analysis

Uncertainty in the results of any risk assessment are the result of the following (Cr88):

(1) Modeling uncertainties
(2) Completeness uncertainties
(3) Parameter uncertainties

7.2.2.1.1 Modeling Uncertainties

Modeling uncertainties pertain to the formulation of mathematical models used to predict risk and the degree to which they accurately represent reality. One way to address this source of uncertainty is to perform the analysis using a set of feasible alternative model structures.

In general, modeling uncertainty is the most difficult component to assess since it is often impossible to justify a set of plausible alternative models in light of the available data and to assign probabilities to these alternatives. To an extent, modeling uncertainty is incorporated into the estimates of uncertainty. For example, the uncertainty in the risk factors includes a consideration of the uncertainty in the form of the dose-response and risk projection models. On the other hand, as noted in Chapter 5, uncertainty in the formulation of metabolic models is a serious problem in estimating dose conversion factors for many radionuclides. Modeling uncertainty for dispersion and

pathway calculations pose similar problems. As a result, the estimates of uncertainty in radiological risk do not fully reflect the contribution of modeling uncertainty.

One method that may be used to validate the models, and therefore reduce this source of uncertainty, is to perform field tests of the models under the conditions of interest. However, this is rarely done due to cost and other limitations. Alternatively, additional uncertain parameters could be included in the model or the range of the values assigned to the uncertain parameters could be expanded to account for this source of uncertainty.

7.2.2.1.2 Completeness Uncertainties

Completeness uncertainties are applicable to all risk assessments. The issue has to do with whether all significant radionuclides and pathways of exposure have been addressed. For most facilities addressed in Volume II, the source terms are well characterized and there is little likelihood that a significant undetected radionuclide release is occurring. With regard to pathways of exposure, the analyses assume that all the major pathways of exposure (ingestion of milk, meat and vegetables, inhalation, immersion in contaminated air, and exposure to contaminated ground) are present at all sites (except those emitting only radon, where inhalation is the only pathway of significance).

However, even though a pathway is included, it may itself be incomplete. For example, the analyses do not explicitly address the direct ingestion of contaminated soil and the use of goat's milk (vs. cow's milk) in the ingestion pathway. In addition, changes in land use and living habits could introduce pathways not considered here, and source categories that are treated generically (such as hospitals) may include sites which have unique pathways. These types of completeness uncertainties were not explicitly addressed in the uncertainty analysis because, though these pathways could contribute to risk over any given year, they are unusual, and it is unlikely that they would persist over the life of an individual. Hence, they would not contribute significantly to risk or the uncertainty in the lifetime risk to an average individual.

One method that is sometimes used to account for this type of completeness uncertainty is to add an additional term to the pathway model to represent unknown pathways and assign to it a distribution based on judgement. This approach was not used because it is considered unlikely that unusual pathways, such as goat's milk and soil ingestion, would be present at the critical locations for prolonged periods of time.

7.2.2.1.3 Parameter Uncertainties

Uncertainties in the values of the calculational input parameters are the major sources of uncertainty in the risk assessments when modelling or completeness uncertainties are small. In addition, model and completeness uncertainties are not readily amenable to explicit analysis. Accordingly, the quantitative uncertainty analysis focuses on parameter uncertainties.

The assessment of parameter uncertainty involves the development of quantitative characterizations of the uncertainties associated with key model parameters. These characterizations can be probability distributions or a set of discrete values. Once key uncertain parameters are characterized, their uncertainties are propagated through the models using a simulation technique producing a probability distribution representing uncertainty about the risk assessment model results.

In order to perform an uncertainty analysis, it is necessary to clearly define the risk that is being estimated. Is the risk for a real or hypothetical person, is it the maximum or the average risk, and is it the current or possible future risk that is of concern? The individuals constructing the distributions must clearly understand the objectives of the analysis or the resulting distributions will be incompatible.

The results of the risk assessments provided in each of the chapters of Volume II are expressed in terms of the risk to the maximum individual and the total incidence of fatal cancer in an exposed population. Because population risks represent the sum of individual risks, uncertainties in the individual risks tend to cancel each other out during the summing process. As a result, the uncertainty in estimates of population risk are smaller than the uncertainty in the estimates of the risks associated with the individual members of the population. Because of this, the uncertainty analysis is limited to the uncertainty in risks to an individual.

The concept of the individual risk must also be clearly defined in order to develop the appropriate distributions for use in the uncertainty analysis. In this BID, the individual risk is defined as the lifetime risk from a lifetime exposure to a typical member of the population currently residing either at the location with the maximum potential for exposure, or, where actual demographic data are known, at the inhabited location of greatest exposure. It is assumed that the individual resides at the same location for a lifetime. Since the risk being estimated is the lifetime risk, year to year variabilities average out. This is an important consideration since, over any given short period of time, a particular person could have highly unusual living habits. But over a prolonged period of time, living habits tend to resemble the population average, thereby reducing

000213

uncertainty. The differences in risk among different age groups and their associated uncertainties also average out when addressing lifetime risk. Parameter distributions for the average individual represent uncertainties in average values and do not represent the variations among individuals.

A separate set of calculations was performed to assess individual risk, but assuming that the residence time is an exposure variable, with a distribution that follows the residence times for members of the U.S. population. Under these assumptions, individuals belonging to specific age groups are assumed to be exposed for randomly selected time periods. As a result, adjustments were made to the models to account for the differences in the risk factors as a function of age of exposure.

A final consideration important to the development of meaningful uncertainty distributions is individual differences in metabolism and radiosensitivity. The risks provided in the BID are for "typical" members of the population, and, as a result, the uncertainties in these risks are, in part, dependent on the uncertainty in our understanding of these parameters as they apply to a typical member of the population. A great deal is known about the biological behavior of radionuclides taken into the body and the potential adverse effects of exposure radiation. As a result, the uncertainty in these parameters is relatively small. Conversely, any one individual in the population could have biological characteristics that differ markedly from "typical." The uncertainty distributions for the biological parameters for atypical individuals is not addressed in this uncertainty analysis.

In summary, for the purpose of the uncertainty analysis, distributions were developed for the best estimate of the values of the parameters as they pertain to the calculation of the lifetime fatal cancer risks to typical members of the population residing for a lifetime at currently-occupied locations that have the maximum potential for exposure.

7.2.2.2 Techniques for Propagating Uncertainties

After each of the calculational parameters have been assigned probability distributions, these distributions are used as input to models that propagate the uncertainties. Two widely used analytical and numerical approaches for propagating uncertainties are method of moments techniques and Monte Carlo techniques. Method of moments is the standard method for propagating error described in fundamental texts on statistics. This method propagates errors by calculating a linear combination of the first and second moments for each model factor. This is the simplest of the methods for propagating error but requires that the distributions of the values of the uncertain parameters can be approximated by their first two moments. In addition, since the coefficients which quantify uncertainty about each parameter depend on the values of the parameters, the method is

only useful when the uncertainty in each parameter is small enough that it will not significantly perturb the coefficients.

The alternative to the method of moments is the use of numerical techniques, primarily Monte Carlo analysis. Numerical techniques have the advantage that they do not require the parameters to follow normal or lognormal distributions or have a small degree of uncertainty relative to the mean. However, these approaches can consume considerable computer resources.

Monte Carlo techniques calculate risk in the same manner as described in Chapters 4, 5 and 6, except they perform the calculation many times, each time randomly selecting an input value from each of the probability distributions representing uncertainty about each parameter. The output is a risk distribution. The number of repetitions determines the precision of the output distribution. The more repetitions and the larger the number of calculational parameters treated as distributions in the model, the greater the computer resource requirements.

By controlling how the values are sampled from each distribution, parameters that are directly or indirectly correlated can also be modeled. In addition, by a linear regression analysis of individual parameters, the parameters that are important contributors to uncertainty can be identified.

A Monte Carlo technique for propagating uncertainty was chosen for use in this analysis. The computer code selected is called MOUSE (KLEE86). To use MOUSE, a subroutine is written that defines the risk equations and the distributions for each parameter. MOUSE then uses these distributions and equations to choose a random value for each parameter and calculate the risk. It does this over and over (typically 1000 to 5000 times), and stores the results of each trial. At the end it computes and tabulates the statistics for the set of calculated values. The result is an estimate of the distribution of risk.

7.2.2.3 Choice of Source Categories

Of the 12 source categories, four site-specific analyses were selected for this uncertainty analysis. The choice was made on the basis of those having either a high risk or a high uncertainty and therefore to be representative of the 12 source categories in terms of the overall uncertainty in the risk assessments provided in the BID.

The scenarios and facilities considered in this study are as follows:

1. Elemental Phosphorous Plants--FMC, Idaho
2. DOE Facilities-Reactive Metals, Inc., Ohio.
3. Phosphogypsum Stack-IMC, Inc., Florida
4. Uranium Mill Tailings Pile-Sherwood, Western Nuclear, Washington

7.3 UNCERTAINTY IN PARAMETERS

The calculational parameters used to derive the risks to the maximally exposed individuals can be conveniently divided into the following categories:

- Source Terms
- Atmospheric Dispersion Factors
- Environmental Transport and Usage Factors
- Risk Conversion Factors

The following sections present a description and discussion of the basis for each of the distributions used to characterize uncertainty about the values of the parameters in each of these categories.

To mitigate the possibility of absurdly small or large values for the parameters, the normal and lognormal distributions were truncated by imposing limits of three standard deviations from the mean. That is, if MOUSE selected a value that was more than three standard deviations away from the mean, it was programmed to go back and try again until the value was within the limits. In the case of normal distributions, the distributions were restricted so that they could not be negative (this is not a problem for lognormal distributions). For parameters whose uncertainty spanned more than one order of magnitude, a logarithmic distribution was used (i.e., log-uniform, lognormal, or log-triangular). This tends to give equal weight to both ends of the distribution and makes the sampling more representative.

7.3.1 Source Term

The source terms are expressed as distributions of the release rates, expressed in Ci/yr. The values are based on measurements and models that attempt to characterize the uncertainty in the release in any given year. However, since the purpose of this assessment is to characterize the uncertainty in lifetime risks, the distributions that are required are those representing the uncertainty in the projected average annual release over a prolonged period of time. Such long term averages have a lesser degree of uncertainty than the uncertainty in the estimated annual source term for any given one year period. From this perspective, the source term distributions tend to overestimate uncertainty.

In many cases, the source terms are based on a limited number of measurements, which are associated with a relatively small sampling and analytical error, but a high degree of uncertainty regarding the representativeness of the measurements for extended periods of time. In general, the variability among the individual measurements was used as indicative of the variability of the long term average source term for each source category.

7.3.1.1 FMC Elemental Phosphorous Plant and Reactive Metals, Inc. Fuel Fabrication Plant

The emissions from these facilities are measured by means of stack monitors. The uncertainty in the source term for the FMC elemental phosphorous plant is based on EPA88. EPA88 contains data for 7 release rate measurements for polonium-210 and 6 for lead-210. The measurements were represented by lognormal distributions. The results are as follows:

Nuclide	Geometric Mean (Ci/yr)	Geometric Standard Deviation (dimensionless multiplier)
Po-210	9.7	1.2
Pb-210	0.11	2.6

The uranium, thorium and radium source terms were not explicitly addressed because collectively they were found to contribute only about 0.2 percent to the dose.

The source term for the Reactive Metals fuel fabrication facility is based on effluent measurements. The uncertainty in these values was assumed to be only measurement error, having a normal distribution with a standard deviation of 30 percent of the reported mean value. The release rates used in the analysis are as follows:

Nuclide	Arithmetic Mean (Ci/yr)	Arithmetic Standard Deviation (Ci/yr)
U-234	2.2E-4	6.6E-5
U-235	4.4E-5	1.3E-5
U-238	5.5E-3	1.7E-3

7.3.1.2 IMC Phosphogypsum Stack

There has been a fairly extensive program to measure radon emissions from phosphogypsum stacks. From this program, it has been determined that the radon flux is different for different regions of the stack. The results are as follow:

Region of Stack	Geometric Mean Radon Flux (pCi/m^2-sec)
Beach	0.33
Dry areas	13.1
Roads	8.54
Pond	0.
Sides	5.91

The geometric standard deviation of the measurements is considered to be about 2.5.

The release from a gypsum stack depends not only upon the flux from these regions, but also upon the fraction of the top or side area that they represent. Note that these areas and fractions are for operating or idle stacks. When a stack is closed, there are no beaches or ponds. The fractions are as follows for the IMC gypsum stack (which is operating):

Region of Stack	Fraction of Top or Side Area	
Beach	0.1 to 0.2	(top)
Dry Areas	0.2	(top)
Roads	0.05	(top)
Pond	0.55 to 0.65	(top)
Sides	1.0	(side)

The fraction of beach was assumed to vary uniformly between the limits given above (representing the rise and fall of the water level in the pond) and the pond fraction varied accordingly.

7.3.1.3 Sherwood Uranium Mill Tailings Pile

The source term used in the BID, 210 Ci/yr, is a predicted value based on measured concentrations of radium-226 in the pile and assumptions regarding the long term conditions of the pile. This estimated value was used as the median of a lognormal distribution with a geometric standard deviation of 4. This is slightly greater than that for gypsum stacks (i.e., 2.5) in order to account for the additional uncertainty because of varying release rates over the 70-year period.

7.3.2 Atmospheric Dispersion

The product of the average annual source term (Ci/sec) and the location specific average annual atmospheric dispersion

factor (Chi/Q, sec/m^3)[1], yields the average annual airborne concentration of radionuclides at specific locations (Ci/m^3). Chapter 4 (Section 4.2) presents a discussion of atmospheric dispersion factors and indicates that the uncertainty in the average annual Chi/Q for any given location can range from about a factor of 2 to 10, depending on distance from the release point and complexity of the release and terrain.

In this section, uncertainty distributions for average annual Chi/Q values are developed. A distinction is made between the uncertainty distribution for the Chi/Q values at the locations of the maximum individuals and the locations of locally grown food.

7.3.2.1 Atmospheric Dispersion for the Location of the Maximum Individual

For all cases, the median value of Chi/Q was taken to be the value from the AIRDOS runs used to estimate the risks for the BID. The geometric standard deviation for an annual average Chi/Q within 10 km of the release point was based on Miller and Hively (Mi87). They are as follows:

Conditions	Geometric Standard Deviation
Simple terrain and meteorology	1.5
Complex terrain and meteorology	3.8

7.3.2.2 Atmospheric Dispersion Factors for the Locations of Gardens and Farms

For food grown at home, the Chi/Q distribution associated with the maximum individual's location was used. A substantial portion of the maximum individual's diet, however, is assumed to be from food grown within an 80-kilometer radius of the release point. AIRDOS estimates the risk from eating contaminated food grown within this region by distributing food production over the assessment area. Such detail was not feasible in this uncertainty analysis. Instead, the distance to the locations of the regional food sources was assumed to vary randomly. For urban sites, it was assumed that the distance varies uniformly

[1] The atmospheric dispersion factor is often referred to as Chi/Q, where Chi is the radionuclide concentration at a particular location and Q is the source term. When the units are cancelled, Chi/Q is expressed in units of sec/m^3.

from 69,000 to 80,000 meters, which encompasses the outer 25 percent of the urban area around the site. For rural sites, it was assumed that the distance varied from 200 to 80,000 meters, effectively the whole region. A uniform distribution for distance to the locations of the farms and gardens was used, even though the range of distances spans more than two decades. Use of a uniform distribution gives more weight to distant locations which have more area in proportion to their distance and hence more agricultural production. The resulting Chi/Q distributions used for food obtained from other than local gardens are as follows:

Facility	Geometric Mean, sec/m^3	Geometric Standard Deviation
FMC Elemental Phosphorous	7.4x10-9	5.8
Reactive Metals	8.7x10-9	3.8

7.3.3 Pathway and Usage Factors

Once the airborne radionuclide concentration is determined by the product of the source term and Chi/Q, the concentrations of radionuclides in various components of the environment, such as in food and on the ground, are determined through the use of pathway factors. In addition, for the purpose of this analysis, the intake rates of radionuclides via inhalation and ingestion are treated as usage factors representative of the average individual. Accordingly, pathway factors are used to calculate radionuclide concentrations in the environment and in foods and the intake rates of these radionuclides through ingestion and inhalation are calculated with the usage factors.

Table 7-1 gives the definitions of the parameters used in the risk assessment for the maximally exposed individuals. Chapter 4 presents a description of the parameters and how they are used to model the behavior of radionuclides in the environment. The uncertainty analysis includes one additional parameter to account for the differences between the indoor and outdoor airborne radionuclide concentrations (i.e., F_{cin}).

Tables 7-2 and 7-3 present the distributions for the pathway parameters used in this uncertainty analysis. A comparison of the values of the parameters used in Volume II with the distributions for those parameters provides some insight into the uncertainty in the BID risk estimates and the degree to which the BID risks are representative of actual risks.

Table 7-1. Environmental transport factors.

B	= breathing rate (m^3/year);
B_p or B_v	= concentration ratio for the transfer of the element to the edible portion of a crop or pasture grass from dry soil (pCi/kg plant per pCi/kg soil);
F_{cin}	= ratio of indoor to outdoor concentration;
F_{home}	= fraction of a particular food obtained from home garden;
F_{in}	= fraction of time spent indoors;
F_m or F_f	= transfer factor of radionuclide, the fraction of the daily intake that is transferred to milk (d/L) or meat (d/kg), respectively;
F_r/Y	= ratio of interception fraction, Fr, the fraction of deposited activity intercepted and retained by edible portion of crop (dimensionless) to Y, the standing crop biomass of edible portion of crop at harvest. The units of the ratio are m^2/kg.
F_{regn}	= fraction of a particular food obtained from within region;
F_{site}	= fraction of time spent at home;
F_{wash}	= fraction of activity removed by washing
P	= areal density for the effective root zone in soil (kg/m^2)
Q_m or Q_f	= feed consumed daily by animal (kg/d).
t_{exp}	= exposure time (time from planting to harvest)
T	= delay time from harvest to ingestion (d)
t_w	= weathering half life (d)
V_d	= deposition velocity (cm/sec)
λ_{HL}	= rate constant for removal of radioelement from soil by harvesting and leaching (1/d);

000221

Table 7-2 Distributions of ingestion pathway parameters.

Parameter	BID	Distr[a]	Par1[b]	Par2[c]	Min	Max	Ref
F_r/Y pasture[d]	1.4 m^2/kg	LN	1.8	1.6	-	-	HO82
F_r/Y vegetables[d]	.1 m^2/kg	LN	.1	1.8	-	-	HO82
T_w	14. days	LN	12	1.7	-	-	HO82
Q_m (dry wt.)	16. kg/d	N	16	11	-	-	HO82
Q_f (dry wt.)	12. kg/d	N	12	8.3	-	-	HO82
T (milk)	2. day	T	2	-	1	14	SCA89
T (meat)	20. day	T	17	-	1	365	SCA89
T (veg)	14. day	T	11	-	1	365	SCA89
t_{exp} (veg)	60. day	T	60	-	30	90	SCA89
t_{exp} (pasture)	30. day	T	30	-	15	60	SCA89
P dry soil	215. kg/m^2	U	-	-	190	260	SCA89
V_d Particles	160. m/d	LN	250	3.8	-	-	SCA89
V_d Iodine	3000. m/d	LN	500	3.5	-	-	SCA89
λ_{HL}	0.01 y^{-1} 2.7e-5 d^{-1}	LU	-	-	7.3e-5	2.9	SCA89

[a] Probability distributions, where LN = lognormal, N = normal, T = triangular, U = uniform, LT = log-triangular, LU = log-uniform.

[b] For normal distributions, PAR1 is the arithmetic mean; for lognormal distributions, it is the geometric mean; for triangular distributions, it is the mode.

[c] For normal distributions, PAR2 is the arithmetic standard deviation; for lognormal distributions it is the geometric standard deviation.

[d] The values are based on dry weight for animal feed (which is about 25% of fresh weight and range from .2 to .35 (HO82)) and fresh weight for vegetables.

Table 7-2 Distributions of ingestion pathway parameters (continued).

Parameter	BID	Distr[a]	Mean/ Mode[b]	SD[c]	Min	Max	Ref
			B_v (vegetables, Ci/kg plant per Ci/kg soil--average values)[d]				
Po	1E-3	LU	-	-	2E-6	7E-3	NG82
Pb	1E-2	LU	-	-	5E-4	4E-2	NG82
U	2E-3	LU	-	-	1.4E-3	.2	IB88;EPA89
			B_p (forage, Ci/kg plant per Ci/kg soil)[d]				
Po	1E-2	LU	-	-	8E-6	3E-2	NG82[e]
Pb	9E-2	LU	-	-	2E-2	.3	MC80
U	1E-2	LU	-	-	6E-3	.8	IB88;EPA89
			F_m (milk, day/l or day/kg)				
Po	4E-4	LU	-	-	1E-4	3E-4	NG77
Pb	3E-4	LU	-	-	2E-6	5E-4	NG82;MC80
U	6E-4	LU	7.3E-5	-	1E-5	1E-3	NG77

[a] Probability distributions, where LN = lognormal, N = normal, T = triangular, U = uniform, LT = log-triangular, LU = log-uniform.

[b] For normal distributions, PAR1 is the arithmetic mean; for lognormal distributions, it is the geometric mean; for triangular distributions, it is the mode.

[c] For normal distributions, PAR2 is the arithmetic standard deviation; for lognormal distributions it is the geometric standard deviation.

[d] The Bv values are based on fresh weight of vegetables and dry weight of animal feed. Soil is dry weight for both.

[e] The values in NG82 are for dry weght. The values for fresh weight were obtained by multiplying the values for dry weight by four.

000223

Table 7-2 Distributions of ingestion pathway factors (continued).

Parameter	BID	Distr[a]	Mean/ Mode[b]	SD[c]	Min	Max	Ref
			F_f (meat, day/kg)				
Po	5E-3	LU	-	-	-[d]	-[d]	-
Pb	8E-4	LU	-	-	2E-4	2E-3	MC80
U	1E-2	LU	-	-	-[d]	-[d]	-

[a] Probability distributions, where LN = lognormal, N = normal, T = triangular, U = uniform, LT = log-triangular, LU = log-uniform.

[b] For normal distributions, PAR1 is the arithmetic mean; for lognormal distributions, it is the geometric mean; for triangular distributions, it is the mode.

[c] For normal distributions, PAR2 is the arithmetic standard deviation; for lognormal distributions it is the geometric standard deviation.

[d] No values available; used 0.1 and 10 times BID value.

Table 7-3 Distributions of miscellaneous pathway factors.

Parameter	BID	Distr[a]	Par1[b]	Par2[c]	Min	Max	Ref
B	8000 m^3/yr	N	8000	1.2	-	-	SCA89
F_{cin}	-	U	-	-	0.5	1.0	SCA89
F_{in} (urban)	-	U	-	-	0.96	1.0	SCA89
F_{in} (rural)	-	U	-	-	0.92	1.0	SCA89
F_{site}	-	U	-	-	0.6	0.8	SCA89
F_{home} (rural)							SCA89
Vegetables	0.7	U	-	-	0.	0.6	
Milk	0.4	U	-	-	0.	0.2	
Meat	0.6	U	-	-	0.	0.2	
F_{home} (urban)							SCA89
Vegetables	0.076	U	-	-	0.	0.2	
Milk	0.	U	-	-	0.	0.02	
Meat	0.008	U	-	-	0.	0.02	
F_{regn} (rural)							SCA89
Vegetables	0.3	U	-	-	0.2	0.8	
Milk	0.6	U	-	-	0.8	1.0	
Meat	0.558	U	-	-	0.4	0.8	
F_{regn} (urban)							SCA89
Vegetables	0.924	U	-	-	0.1	0.4	
Milk	1.0	U	-	-	0.2	0.4	
Meat	0.992	U	-	-	0.1	0.2	
F_{wash}	0.5	U	-	-	0.1	0.9	SCA89

[a] Probability distributions, where N = normal, U = uniform, T = triangular.

[b] For normal distributions, PAR1 is the arithmetic mean; for triangular distributions, PAR1 is the mode.

[c] For normal distributions, PAR2 is the arithmetic standard deviation.

000225

The uncertainty distributions are based primarily on the following sources:

- NUREG/CR-2612, "Variability in Dose Estimates Associated with the Food Chain Transport and Ingestion of Selected Radionuclides". Prepared by F.O. Hoffman, et al of the ORNL for the NRC. June 1982. (HO82).

- NUREG/CR-1004, "A Statistical Analysis of Selected Parameters for Predicting Food Chain Transport and Internal Dose to Radionuclides". Prepared by F.O. Hoffman and C.F. Baes, III, of the ORNL for NRC. November 1979. (HO79).

- Ng, Y.C. A Review of Transfer Factors for Assessing the Dose from Radionuclides in Agricultural Products, Nuclear Safety, 23(1), 57, 1982. (NG82).

- NRPB-R184 A Report by the National Radiological Protection Board entitled "Uncertainty Analysis of the Food Chain and Atmospheric Dispersion Modules of MARC by M.J. Crick et al., May 1988. (CR88).

In addition, a review of the Health Physics Journal was performed to supplement the above review articles. A detailed description of the bases for the distributions is provided in "Analysis of the Uncertainties in the Risk Assessment Performed in Support of the Proposed NESHAPS for Radionuclides" (EPA89).

The distributions presented in Tables 7-2 and 7-3 are based primarily upon distributions reported in the literature. They provide an indication of the range of possible values; however, for a specific site, the range may be narrowed by selecting only those studies that are closely related to that site. Such a level of refinement was not possible for this study, and thus the degree of dispersion of risk about the mean for specific sites may be an overestimate. On the other hand, the generic hospitals represent sites located all over the United States. For them, the range of values probably does not encompass all of the possibilities, and hence, the degree of dispersion in the risk may be underestimated.

7.3.4 Risk Factors

Risk factors are expressions of the lifetime risk of fatal cancer per unit exposure or intake of individual radionuclides. A detailed discussion of the sources and magnitudes of uncertainties associated with the calculation of risk is provided in Chapters 5 and 6.

Except for exposure to radon, the calculation of risk is a two step process. First, dose rate is calculated as a function of age for individual organs from each radionuclide and exposure pathway. Then the risk attributable to the organ doses is

calculated. For radon, a great deal of epidemiological data exists which establishes a direct relationship between long term exposure to radon progeny and the risk of lung cancer. Accordingly, dose to the lung is not used to estimate the lung cancer risk associated with exposure to a given concentration of radon progeny (see Section 6.4). Because of these differences, fundamentally different approaches were used for developing uncertainty distributions in the risk factors for exposure to radon and radionuclides other than radon.

For exposures to radon, risk factors ranging from 140 to 720 deaths per 10^6 working level months were used. The basis for this distribution is described in Chapter 6 (Section 6.4). The risk factors were assumed to be log-uniform between these limits.

In order to account for the additional uncertainty when exposure duration was varied, an additional GSD of 1.5 was incorporated into the uncertainty distribution for the radon exposure risk factor (see Section 6.5).

For radionuclides other than radon, the risk distributions were calculated from the following expression:

$$\text{Risk} = F \sum_{ij} E_{ij} R_{ij} \qquad (7\text{-}1)$$

where:

Risk is the lifetime risk of fatal cancer from exposure to all radionuclides via all pathways,

E_{ij} is the intake or exposure from nuclide i via pathway j,

R_{ij} is the risk factor for nuclide i via pathway j, and

F is a factor to account for the overall uncertainty in the risk model.

Each parameter in the equation is assigned a distribution. However, the distribution assigned to the risk factor (R_{ij}) only accounts for the portion of the uncertainty associated with estimating dose from a given intake of radionuclides. The contribution to overall uncertainty in going from dose to risk is accounted for through the use of F, which is a unitless multiplier. This approach allows the uncertainty in the risk model, which is common to all radionuclides, to be treated separately from the uncertainty in the dose estimates, which is radionuclide specific.

000227

F is assumed to be lognormally distributed with a geometric mean of 1.0 and a geometric standard deviation of 1.8 (1.8^4, or a factor of 10, would encompass about 95 percent of the risk). The choice of 1.8 as the geometric standard deviation is based on the discussion of uncertainty provided in Section 6.2.12.

In order to account for the additional uncertainty introduced by the age dependence of the risk factors when exposure duration was varied, the GSD was increased from 1.8 to 2.4, based on the following. Assuming that the distribution of ages in the U.S. population is roughly uniform, and the ratio of the highest to lowest age-dependent risk factor is 9:1 and is distributed log-uniformly, then the geometric standard deviation is:

$$\ln(GSD) = \{[\ln 3 - \ln(0.33)]^2 / 12\}^{1/2} = 0.63 \qquad (7\text{-}2)$$

$$GSD = 1.9$$

Combining this with the geometric standard deviation for the model uncertainty (i.e.,1.8):

$$\ln(GSD) = \{[\ln(1.8)]^2 + [\ln(1.9)]^2\}^{1/2} = 1.25 \qquad (7\text{-}3)$$

$$GSD = 2.4$$

For the case where it is assumed that the maximum individual resides in one location for a lifetime, the distribution of F was assumed to have a GSD of 1.8. For the case when moving is accounted for, a GSD of 2.4 was used. In both the geometric mean was 1.0.

Table 7-4 presents the distributions used to characterize R_{ij}. The values are based on Chapter 5 (Section 5.3). In all cases, for internal exposures, it is assumed that the probability distributions are lognormal having a geometric mean equal to the values of the risk factors in Table A-5. For example, in the category "Essential Element", it is suggested that a factor of two or less for critical organs is the 95 percent confidence interval or two standard deviations from the mean, so the geometric standard deviation is the square root of 2, or 1.4. For external exposures, it is assumed that the 95 percent confidence interval is a factor of 2, giving a geometric standard deviation of 1.4.

7.4 RESULTS

7.4.1 Cumulative Frequency Distributions

Figure 7-2 presents the cumulative frequency distributions from the MOUSE runs for the four cases. While it is not obvious from Figure 7-2, the distributions are, for all practical purposes, lognormal. The risks were plotted on a log-probability graph and are very close to a straight line, indicating that the

Table 7-4. Probability distributions for risk factors[a].

Pathway	Geometric Mean[b]	Geometric Std. Dev.
I-125		
Ground[b]	0.63	1.4
Immersion[b]	14.0	1.4
Ingestion[b]	2.7	1.4
Inhalation[b]	1.8	1.4
I-131		
Ground	14.0	1.4
Immersion	67.0	1.4
Ingestion	3.7	1.4
Inhalation	2.6	1.4
Pb-210		
Ground	0.085	1.4
Immersion	1.8	1.4
Ingestion[c]	55.0	1.4
Inhalation[c]	3.6E+4	1.4
Po-210		
Ground	2.9E-4	1.4
Immersion	0.015	1.4
Ingestion[c]	140.0	2.2
Inhalation[c]	1.1E4	2.2

[a] Note that this distribution only accounts for the uncertainty associated with the calculation of dose from intake. The uncertainty associated with the calculation of risk from dose is taken care of by F.

[b] The units are m^2/Ci-year (ground), m^3/Ci-year (immersion), Ci^{-1} (ingestion and inhalation).

[c] These values differ from the values in Table A-5 because, in the risk assessment provided in Volume II, actual particle sizes and solubility classes specific to these facilities were used. The values in Table A-5 were not used for these facilities.

Table 7-4. Probability distributions for risk factors[a] (continued).

Pathway	Geometric Mean[b]	Geometric Std. Dev.
U-234		
Ground	0.024	1.4
Immersion	0.23	1.4
Ingestion[c]	75.0	2.2
Inhalation[c]	2.5E+4	2.2
U-235		
Ground	5.5	1.4
Immersion	250.0	1.4
Ingestion[c]	73.0	2.2
Inhalation[c]	2.3E+4	2.2
U-238		
Ground	0.019	1.4
Immersion	0.15	1.4
Ingestion[c]	74.0	2.2
Inhalation[c]	2.2E+4	2.2

[a] Note that this distribution only accounts for the uncertainty associated with the calculation of dose from intake. The uncertainty associated with the calculation of risk from dose is taken care of by F.

[b] The units are m^2/Ci-year (ground), m^3/ Ci-year (immersion), Ci^{-1} (ingestion and inhalation).

[c] These values differ from the values in Table A-5 because, in the risk assessment provided in Volume II, actual particle sizes and solubility classes specific to these facilities were used. The values in Table A-5 were not used for these facilities.

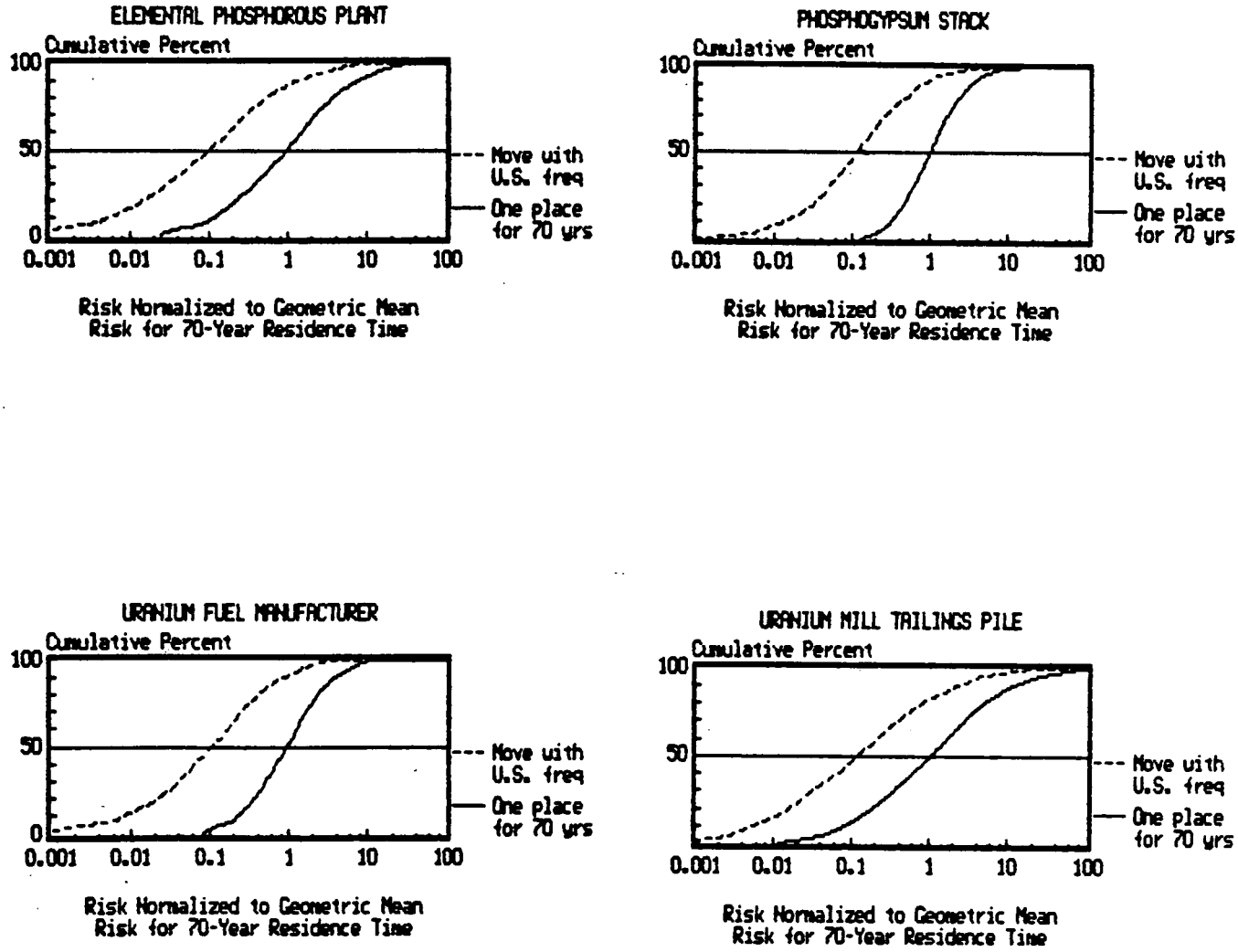

Figure 7-2 Cumulative probability distributions for risk.

results are lognormally distributed. In addition, the medians (50th percentiles) and the geometric means differ by only about 10 percent or less, while the medians and arithmetic means differ by factors of 2 to 20. If a distribution is lognormal, the median is equal to the geometric mean; if it is normal the median is equal to the arithmetic mean. Thus, the distributions for the risks appear to be lognormally distributed, and are properly characterized by the geometric means and geometric standard deviations.

7.4.2 Comparison of the Results of the Uncertainty Analysis to the results provided in Volume II

Table 7-5 presents the geometric means and ranges of the results of the uncertainty analysis. The range of values were derived by dividing and multiplying the geometric mean by the square of the standard deviation. This is believed to be the interval within the true risks are likely to fall.

Table 7-5 also includes the values of risk provided in Volume II of the BID. For the case where the maximum individual is assumed to reside at the same location for 70 years, the results in Volume II lie approximately in the center of the range of values. This provides a high level of confidence that the values in Volume II represent a reasonable and realistic estimate of risk.

In response to several requests, the agency performed an uncertainty analysis, which included the effects of distributing the exposure period according to U.S. residency duration data. The effect of doing this is large, as shown by Table 7-5 and Figure 7-2. Both the central values and the overall uncertainties are strongly affected. The geometric means are lower by about a factor of ten and the upper limits by a factor of between two and five. However, there are several aspects which deserve consideration in evaluating these effects.

The principal basis the Agency has used to compare individual risk has been the lifetime risk from a lifetime exposure. The lifetime exposure is not intended as a conservative overestimate of the average exposure duration. It does allow consistent comparisons to be made which can unambiguously take into account the effects of age at exposure. Clearly, one can scale such an estimate for other periods of exposure, e.g., the average lifetime risk from a one year exposure. But such a scaling only redefines the individual risk; it should not affect any decision making process.

It is important to note that the distribution proposed for the residency period is based on the population distribution of exposure duration due to moving, rather than on the uncertainty in the <u>mean</u> exposure duration. In contrast, the usage parameters such as breathing rate are distributed according to the uncertainty in their mean values. There would be little

Table 7-5. Comparison of Monte-Carlo individual risk estimates to those in Volume II.

Facility (Vol II Risk)[a]	Based on Not Moving During a Lifetime (70 years)		Based on Residence Time of Distributions of the U.S. Population	
	Geometric Mean[b]	Range[b,c]	Geometric Mean[b]	Range[b,c]
Elemental Phos. Plant (5.7E-4)	3.4E-4	1.4E-5 - 8.4E-3	3.4E-5	4.8E-7 - 2.4E-3
Uranium Fuel Manuf. (4.1E-5)	2.5E-5	2.8E-6 - 2.2E-4	3.7E-5	6.8E-8 - 9.4E-5
Phosphogypsum Stack (2.4E-5)	1.9E-5	3.3E-6 - 1.1E-4	2.0E-6	7.9E-8 - 5.0E-5
Uranium Mill Tailings Pile (1.1E-5)	3.5E-6	7.6E-8 - 1.6E-4	3.9E-7	3.6E-9 - 4.2E-5

[a] Parenthetical values are the risk estimates provided in Volume II.

[b] Values are shown to two significant figures only for comparison purposes.

[c] The lower and upper limit is the geometric mean divided by and multiplied by the square of the standard deviation.

contribution to the uncertainty if the exposure duration were treated as a usage factor.

Using the population distribution also raises other issues. For example, if one allows for moving, the individual receiving the highest lifetime exposure will no longer, in general, live at the maximally exposed residence. A proper estimate of maximum individual risk would then require a more careful consideration of the population distribution around the source in question. We have included an additional factor to reflect the increased uncertainty in risk due to age at exposure, but we realize that our treatment of this uncertainty is incomplete. We have not considered the probability that a move nearby may not change the conditions for exposure in any substantial way; it is clear, however, that many moves are to nearby locations.

In short, we do not believe that including a factor for exposure duration improves the assessment of maximum individual

risk. Furthermore, improper application of such a factor can easily lead to erroneous conclusions regarding uncertainties in the risk assessment.

The results also reveal that there is substantial uncertainty associated with the risk estimates. In all cases, the range of uncertainty spans several orders of magnitude. This means that it is possible that the true risks could be several times higher or lower than the values reported in Volume II.

7.4.3 Principal Pathways and Major Parameters Affecting Risk

For the facilities analyzed, the major pathway is inhalation. The significance of this finding is that the risk is not affected by the very complicated food pathway or the somewhat less complicated ground exposure pathway. Thus uncertainties in hard-to-determine parameters, like the deposition velocity and environmental removal constant, are not significant for these facilities.

A multiple linear regression analysis was performed to identify the parameters that are important contributors to the uncertainty in the risk estimates. In this analysis, the dependent and independent regression variables were the logarithms of the parameters. It was determined that the log transformation gave a much better fit to the data than the untransformed data. In all cases, the correlation coefficient is 95 percent or more, indicating a good fit.

The results of the regression analysis are presented in Table 7-6. Of the approximately 40-60 parameters addressed in this analysis, only about 5 or 6 are important contributors to the uncertainty in the risk estimates. In all cases, the atmospheric dispersion factor is an important contributor to uncertainty in risk, and, for the case where the resident is assumed to move, uncertainty in the residence time is an important contributor to uncertainty in the risk estimates. For the individual facilities, uncertainties in the source terms and the risk factors consistently are important contributors to overall uncertainty in risk.

Table 7-6. Contributions of various pathways to risk[a].

Facility	Fraction of Uncertainty due to Parameter: Based on Not Moving During a Lifetime (70 Years)		Based on Residence Time of Distributions of the U.S. Population	
Elem. Phos.	Atm Disp	.64	Atm Disp	.36
	Inh Risk Factor for Po-210	.18	Res Time	.33
	F	.13	F	.16
	B	.01	Inh Risk Factor for Po-210	.11
Fuel. Fab.	Inh Risk Factor for U-238	.29	Res Time	.50
	F	.28	F	.22
	Atm Disp	.13	Inh Risk Factor for U-238	.12
	Release Rate for U-238	.10	Atm Disp	.05
	B	.02	Release Rate for U-238	.03
Phospho-gypsum Stack	Rn Risk Factor	.28	Res. Time	.62
	Top Dry Rn Flux	.26	Rn Risk Factor	.09
	Atm Disp	.20	Top Dry Rn Flux	.08
	Side Rn Flux	.15	Atm Disp	.06
	Indoor Rn Equi Fraction	.05	Age Component of F	.06

[a] See Table 7-1 for the definition of terms.

000235

Table 7-6. Contributions of various pathways to risk[a] (continued).

Facility	Fraction of Uncertainty due to Parameter: Based on Not Moving During a Lifetime (70 Years)		Based on Residence Time of Distributions of the U.S. Population	
Uranium Tailing Pile	Atm Disp	.46	Rn Release	.32
	Rn Release	.46	Atm Disp	.31
	Rn Risk Factor	.06	Res Time	.27
			Rn Risk Factor	.04

[a] See Table 7-1 for the definition of terms.

7.5 REFERENCES

BOC88 Bureau of Census, "American Housing Survey for the United States in 1985." H-150-85, December 1988.

CRP87 Council of Radiation Program Directors, Inc., "Compilation of State-by-State Low-Level Radioactive Waste Information", U.S. Department of Energy, DOE/ID/12377, Frankfort, KY, 1987.

CR88 Crick, M.J. et al, "Uncertainty Analysis of the Foodchain and Atmospheric Dispersion Modules of MARC", NRPB-R184, National Radiological Protection Board. May 1988.

EPA84 U.S. Environmental Protection Agency, Proposed Guidelines for Exposure Assessment, Request for Comments, 49 FR 46304, November 23, 1984.

EPA88 U.S. Environmental Protection Agency, "Elemental Phosphorus Production - Calciner Offgases. EMB Report No. 88-EPP-02, Volume 1, January 1989.

HO79 Hoffman, F.O. and Baes III, C.F., "A Statistical Analysis of Selected Parameters for Predicting Food Chain Transport and Internal Dose of Radionuclides", NUREG/CR-1004. Prepared by Oak Ridge National Laboratory for the NRC. November 1979.

HO82 Hoffman, H.O. et al, "Variability in Dose Estimates Associated with the Food Chain Transport and Ingestion of Selected Radionuclides", NUREG/CR-2612, Prepared by Oak Ridge National Laboratory for the NRC, June 1982.

IB88 Ibrahim, S.A. and Whicker, F.W., "Comparative Uptake of U and Th by Native Plants at a U Production Site", Health Physics, 54, 413, April 1988. KLEE86, Albert J. Klee, "The MOUSE Manual", U.S. Environmental Protection Agency, Cincinnati, Ohio, May 23, 1986.

Mi87 Miller, C.W. and L.M. Hively. "A Review of Validation Studies for the Gaussian Plume Atmospheric Dispersion Model." Nuclear Safety, 28(4), Oct - Dec 1987.

MC80 McDowell-Boyer L.M. et al. A Review of Parameters Describing Terrestrial Transport of Lead-210 and Radium-226. Nuclear Safety, 21, 486, August 1980.

NG77 Ng, Y.C. et al., "Transfer Coefficients for the Prediction of the Doses to Man via the Forage-Cow-Milk Pathway from Radionuclides Released to the Biosphere", UCRL-51939. Prepared by Lawrence Livermore laboratory for DOE, July 1977.

NG82 Ng, Y.C., "A Review of Transfer Factors for Assessing the Dose from Radionuclides in Agricultural Products", Nuclear Safety, 23, 57, January 1982.

NRC75 U.S. Nuclear Regulatory Commission, "Reactor Safety Study: An Assessment of Accident Risks in United States Commercial Nuclear Power Plants", WASH-1400, October 1975.

RI83 Rish, W.R., Mauro, J.M., and Schaffer, S.A., "Analyses of Uncertainties in the EPA Ore Body Release and River Mode Exposure Pathway Models Used as the Bases for Proposed Geologic Repository Release Limits", Final Report to Battelle Project Manager Division (BPMD) for the Department of Energy, June 10, 1983.

SCA89 U.S. Environmental Protection Agency, "Analysis of the Uncertainties in the Risk Assessment Performed in Support of the Proposed NESHAPS for Radionuclides.

APPENDIX A

ASSESSMENT METHODOLOGY

A.1 INTRODUCTION

This appendix to Volume I provides a brief overview of some of the key calculational assumptions used by the Environmental Protection Agency (EPA) to assess the doses and health risk from radiation exposures.

A.2 ENVIRONMENTAL PATHWAY MODELING

A.2.1 Individual Assessment

The nearby individuals were assessed on the following basis:

(1) The nearby individuals for each source category are intended to represent an average of individuals living near each facility within the source category. The location of one or more persons on the assessment grid which provides the greatest lifetime risk (all pathways considered) was chosen for the nearby individuals.

(2) The organ dose-equivalent rates in the tables are based on the calculated environmental concentrations by AIRDOS-EPA (Mo79). For inhaled or ingested radionuclides, the conversion factors are 50-year committed dose equivalents.

(3) The individual is assumed to home-grow a portion of his or her diet consistent with the type of site. Individuals living in urban areas were assumed to consume much less home-produced food than an individual living in a rural area. It was assumed that in an agriculturally unproductive location, people would home-produce a portion of their food comparable to residents of an urban area, and so the urban fraction is used for such nonurban locations. The fractions of home- produced food consumed by individuals for the generic sites are shown in Table A-1.

Table A-1. Presumed sources of food for urban and rural sites.

Food	Urban/Low productivity			Rural		
	F1	F2	F3	F1	F2	F3
Vegetables	.076	.924	0.	.700	.300	0.
Meat	.008	.992	0.	.442	.558	0.
Milk	0.	1.	0.	.399	.601	0.

F1 and F2 are the home-produced fractions at the individuals' location and within the 80 km assessment area, respectively. The balance of the diet, F3, is considered to be imported from outside the assessment area, with negligible radionuclide concentrations due to the assessed source. If there is insufficient production of a food category within the assessment area to provide the non house-produced fraction for the population, F2 is reduced and F3 is increased accordingly. Fractions are based on an analysis of household data from the USDA 1965-1966 National Food Consumption Survey (USDA72).

A.2.2 Collective Assessment

The collective assessment to the population within an 80 km radius of the facility under consideration was performed as follows:

(1) The population distribution around the generic site was based on the 1980 census. The population was assumed to remain stationary in time.

(2) Average agricultural production data for the state in which the generic site is located were assumed for all distances greater than 500 meters from the source. For distance less than 500 meters, no agricultural production is calculated.

(3) The population in the assessment area consumes food from the assessment area to the extent that the calculated production allows. Any additional food required is assumed to be imported without contamination by the assessment source. Any surplus is not considered in the assessment.

(4) The collective organ dose-equivalent rates are based on the calculated environmental concentrations. Fifty-year dose commitment factors (as for the individual case) are used for ingestion and inhalation. The collective dose equivalent rates in the tables can be considered to be either the dose commitment rates after 100 years of plant operation, or equivalently, the incurred doses that will be for up to 100 years from the time of release. Tables A-2 and A-3 summarizes AIRDOS-EPA parameters used for the assessments (Sj84).

Table A-2 summarizes agricultural model parameters, usage factors, and other AIRDOS-EPA parameters which are independent of the released radionuclides. Table A-3 tabulates element dependent data. These include the default inhalation clearance class and, the fraction of the stable element reacting body fluids after ingestion. Inhaled clearance classes D, W and Y correspond to those materials which clear from the lung over periods of days, weeks, and years respectively. Class * is for gases. Biv_1 and Biv_2 are the soil to pasture and soil to produce

concentration factors respectively. Both factors are for soil concentration on a dry weight basis. The pasture and produce concentrations are on dry and fresh weight bases respectively.

Fm and Ff relate the stable element intake rate to the concentration in milk and meat, respectively. The values for the factors in this table are maintained in the PREPAR file ACCRAD (Sj84).

A.2.3 Dairy and Beef Cattle

Dairy and beef cattle distributions are part of the AIRDOS-EPA input. A constant cattle density is assumed except for the area closest to the source or stack in the case of a point source, i.e., no cattle within 500 m of the source. These densities were derived from data developed by NRC (NRC75). Milk production density in units of liters/day-square mile was converted to number of dairy cattle/square kilometer by assuming a milk production rate of 11.0 liters/day per dairy cow. Meat production density in units of kilograms/day-square mile was changed to an equivalent number of beef cattle/square kilometer by assuming a slaughter rate of .00381 day-1 and 200 kilograms of beef/animal slaughtered. A 180-day grazing period was assumed for dairy and beef cattle.

A.2.4 Vegetable Crop Area

A certain fraction of the land within 80 km of the source is used for vegetable crop production and is assumed to be uniformly distributed throughout the entire assessment area with the exception of the first 500 meters from the source. Information on the vegetable production density in terms of kilograms (fresh weight)/day-square mile was obtained from NRC data (NRC75). The vegetable crop fractions by state were obtained from the production densities by assuming a production rate of 2 kilograms (fresh weight)/year-square meter (NRC77).

A.2.5 Population

The population data for each generic site were generated by a computer program, SECPOP (At74), which utilizes an edited and compressed version of the 1980 United States Census Bureau's MARF data containing housing and population counts for each census enumeration district (CED) and the geographic coordinates of the population centroid for the district. In the Standard Metropolitan Statistical Areas (SMSA), the CED is usually a "block group" which consists of a physical city block. Outside the SMSAs, the CED is an "enumeration district," which may cover several square miles or more in a rural area.

There are over 250,000 CEDs in the United States with a typical population of about 800 persons. The position of the population centroid for each CED was marked on the district maps by the individual census official responsible for each district

and is based only on personal judgment from inspection of the population distribution on a map. The CED entries are sorted is ascending order by longitude on the final data tape.

The resolution of a calculated population distribution cannot be better than the distribution of the CEDs. Hence, in a metropolitan area the resolution is often as small as one block, but in rural areas it may be on the order of a mile or more.

A.2.6 Risk Conversion Factors

Table A-5 summarizes the average lifetime fatal cancer risk per unit intake or exposure for most of the radionuclides considered in the assessments. Note that the external exposure factors do not include the contribution from any decay products. For example, the external risk factors for cesium-137 have values of 0, since there is no photon released in its decay. Hence, the exposure due to the cesium-137 decay product barium-137m must be considered in assessing cesium-137. The clearance class and gut-to-blood transfer factor, f_1, values are shown in Table A-3.

000242

Table A-2. AIRDOS-EPA parameters used for generic site assessments.

Symbolic variable	Description	Value
BRTHRT	Breathing Rate (cm^3/h)	9.17E+5
T	Surface buildup time (days)	3.65E+4
DDI	Activity fraction after washing	0.5
TSUBHI	Time delay-pasture grass (h)	0.0
TSUBH2	Time delay-stored food (h)	2.16E+3
TSUBH3	Time delay-leafy vegetables (h)	336.
LAMW	Weathering removal rate factor (h^{-1})	2.10E-3
TSUBE1	Exposure period-pasture (h)	720.
TSUBE2	Exposure period-crops or leafy vegetables (h)	1.44E+3
YSUBV1	Productivity-pasture (dry weight) (kg/m^2)	0.280
YSUBV2	Productivity-crops and leafy vegetables (kg/m^2)	0.716
FSUBP	Time fraction-pasture grazing	0.40
FSUBS	Pasture feed fraction-while pasture grazing	0.43
QSUBF	Feed or forage consumption rate (kg-dry/day)	15.6
TSUBF	Consumption delay time-milk (d)	2.0
UV	Vegetable utilization rate (kg/y)	176.0
UM	Milk utilization rate (kg/y)	112.0
UF	Meat utilization rate (kg/y)	85.0
UL	Leafy vegetable utilization rate (kg/y)	18.0
TSUBS	Consumption time delay-meat (days)	20.0

Table A-2. AIRDOS-EPA parameters used for generic site assessments (continued).

Symbolic variable	Description	Value
FSUBG	Produce fraction (garden of interest)	1.0
FSUBL	Leafy veg fraction (garden of interest)	1.0
TSUBB	Soil buildup time (y)	100.
P	Effective surface density of soil (kg/m^2)	215.
TAUBEF	Meat herd-slaughter rate factor (d^{-1})	3.18E-3
MSUBB	Mass of meat of slaughter (kg)	200.
VSUBM	Milk production rate of cow (L/d)	11.0
R1	Deposition interception fraction-pasture	0.57
R2	Deposition interception fraction-leafy vegetables	0.20

000244

Table A-3. Default values used for element dependent factors.

Element	Inh. Class	Ing. f_1	B_{iv1}	B_{iv2}	F_m (d/L)	F_f (d/kg)
Ac	Y	1.0E-3	3.5E-3	1.5E-4	2.0E-5	2.5E-5
Ag	Y	5.0E-2	4.0E-1	4.3E-2	2.0E-2	3.0E-3
Am	W	1.0E-3	5.5E-3	1.1E-4	4.0E-7	3.5E-6
Ar	*	0.0	0.0	0.0	0.0	0.0
As	W	5.0E-1	4.0E-2	2.6E-3	6.0E-5	2.0E-3
At	D	9.5E-1	1.0	6.4E-2	1.0E-2	1.0E-2
Ba	D	1.0E-1	1.5E-1	6.4E-3	3.5E-4	1.5E-4
Be	Y	5.0E-3	1.0E-2	6.4E-4	9.0E-7	1.0E-3
Bi	W	5.0E-2	3.5E-2	2.1E-3	5.0E-4	4.0E-4
Br	D	9.5E-1	1.5	6.4E-1	2.0E-2	2.5E-2
C	*	9.5E-1	0.0	0.0	0.0	0.0
Ca	W	3.0E-1	3.5	1.5E-1	1.0E-2	7.0E-4
Cd	Y	5.0E-2	5.5E-1	6.4E-2	1.0E-3	5.5E-4
Ce	Y	3.0E-4	1.0E-2	1.7E-3	2.0E-5	7.5E-4
Cf	Y	1.0E-3	0.0	0.0	0.0	0.0
Cm	W	1.0E-3	8.5E-4	6.4E-6	2.0E-5	3.5E-6
Co	Y	3.0E-1	2.0E-2	3.0E-3	2.0E-3	2.0E-2
Cr	Y	1.0E-1	7.5E-3	1.9E-3	1.5E-3	5.5E-3
Cs	D	9.5E-1	8.0E-2	1.3E-2	7.0E-3	2.0E-2
Cu	Y	5.0E-1	4.0E-1	1.1E-1	1.5E-3	1.0E-2
Eu	W	1.0E-3	1.0E-2	1.7E-3	2.0E-5	5.0E-3
F	D	9.5E-1	6.0E-2	2.6E-3	1.0E-3	1.5E-1
Fe	W	1.0E-1	4.0E-3	4.3E-4	2.5E-4	2.0E-2
Fr	D	9.5E-1	3.0E-2	3.4E-3	2.0E-2	2.5E-3
Ga	W	1.0E-3	4.0E-3	1.7E-4	5.0E-5	5.0E-4
Gd	W	3.0E-4	1.0E-2	1.7E-3	2.0E-5	3.5E-3
H	*	9.5E-1	0.0	0.0	0.0	0.0
Hf	W	2.0E-3	3.5E-3	3.6E-4	5.0E-6	1.0E-3
Hg	W	2.0E-2	9.0E-1	8.6E-2	4.5E-4	2.5E-1
Ho	W	3.0E-4	1.0E-2	1.7E-3	2.0E-5	4.5E-3
I	D	9.5E-1	1.0	4.3E-1	1.0E-2	7.0E-3
In	W	2.0E-2	4.0E-3	1.7E-4	1.0E-4	8.0E-3
Ir	Y	1.0E-2	5.5E-2	6.4E-3	2.0E-6	1.5E-3
K	D	9.5E-1	1.0	2.4E-1	7.0E-3	2.0E-2
Kr	*	0.0	0.0	0.0	0.0	0.0
Ia	W	1.0E-3	1.0E-2	1.7E-3	2.0E-5	3.0E-4
Mn	W	1.0E-1	2.5E-1	2.1E-2	3.5E-4	4.0E-4
Mo	Y	8.0E-1	2.5E-1	2.6E-2	1.5E-3	6.0E-3
N	*	9.5E-1	3.0E+1	1.3E+1	2.5E-2	7.5E-2
Na	D	9.5E-1	7.5E-2	2.4E-2	3.5E-2	5.5E-2

Table A-3. Default values used for element dependent factors (continued).

Element	Inh. Class	Ing. f_1	B_{iv1}	B_{iv2}	F_m (d/L)	F_f (d/kg)
Nb	Y	1.0E-2	2.0E-2	2.1E-3	2.0E-2	2.5E-1
Nd	Y	3.0E-4	1.0E-2	1.7E-3	2.0E-5	3.0E-4
Ni	W	5.0E-2	6.0E-2	2.6E-2	1.0E-3	6.0E-3
Np	W	1.0E-3	1.0E-1	4.3E-3	5.0E-6	5.5E-5
O	*	9.5E-1	0.0	0.0	0.0	0.0
P	D	8.0E-1	3.5	1.5	1.5E-2	5.5E-2
Pa	Y	1.0E-3	2.5E-3	1.1E-4	5.0E-6	1.0E-5
Pb	D	2.0E-1	4.5E-2	3.9E-3	2.5E-4	3.0E-4
Pd	Y	5.0E-3	1.5E-1	1.7E-2	1.0E-2	4.0E-3
Pm	Y	3.0E-4	1.0E-2	1.7E-3	2.0E-5	5.0E-3
Po	W	1.0E-1	2.5E-2	1.7E-3	3.5E-4	3.0E-4
Pr	Y	3.0E-4	1.0E-2	1.7E-3	2.0E-5	3.0E-4
Pu	Y	1.0E-3[a]	4.5E-4	1.9E-5	1.0E-7	5.0E-7
Ra	W	2.0E-1	1.5E-2	6.4E-4	4.5E-4	2.5E-4
Rb	D	9.5E-1	1.5E-1	3.0E-2	1.0E-2	1.5E-2
Re	W	8.0E-1	1.5	1.5E-1	1.5E-3	8.0E-3
Rh	Y	5.0E-2	1.5E-1	1.7E-2	1.0E-2	2.0E-3
Rn	*	0.0	0.0	0.0	0.0	0.0
Ru	Y	5.0E-2	7.5E-2	8.6E-3	6.0E-7	2.0E-3
S	D	8.0E-1	1.5	6.4E-1	1.5E-2	1.0E-1
Sb	W	1.0E-1	2.0E-1	1.3E-2	1.0E-4	1.0E-3
Sc	Y	1.0E-4	6.0E-3	4.3E-4	5.0E-6	1.5E-2
Se	W	8.0E-1	2.5E-2	1.1E-2	4.0E-3	1.5E-2
Sm	W	3.0E-4	1.0E-2	1.7E-3	2.0E-5	5.0E-3
Sn	W	2.0E-2	3.0E-2	2.6E-3	1.0E-3	8.0E-2
Sr	D	3.0E-1	2.5	1.1E-1	1.5E-3	3.0E-4
Tb	W	3.0E-4	1.0E-2	1.7E-3	2.0E-5	4.5E-3
Tc	W	8.0E-1	9.5	6.4E-1	1.0E-2	8.5E-3
Te	W	2.0E-1	2.5E-2	1.7E-3	2.0E-4	1.5E-2
Th	Y	2.0E-4	8.5E-4	3.6E-5	5.0E-6	6.0E-6
Tl	D	9.5E-1	4.0E-3	1.7E-4	2.0E-3	4.0E-2
U	Y	2.0E-1	8.5E-3	1.7E-3	6.0E-4	2.0E-4
W	D	1.0E-2	4.5E-2	4.3E-3	3.0E-4	4.5E-2
Xe	*	0.0	0.0	0.0	0.0	0.0
Y	Y	1.0E-4	1.5E-2	2.6E-3	2.0E-5	3.0E-4
Zn	Y	5.0E-1	1.5	3.9E-1	1.0E-2	1.0E-1
Zr	W	2.0E-3	2.0E-3	2.1E-4	3.0E-5	5.5E-3

(a) For PU239, Pu240, and Pu242, F_1 = 1.0E-4

Table A-4. Cattle densities and vegetable crop distributions for use with AIRDOS-EPA.

State	Dairy cattle density #/km^2	Beef cattle density #/km^2	Vegetable crop fraction km^2/km^2
Alabama	7.02E-1	1.5E+1	4.16E-3
Arizona	2.80E-1	3.73	2.90E-3
Arkansas	5.90E-1	1.27E+1	1.46E-3
California	2.85	8.81	1.18E-2
Colorado	3.50E-1	1.13E+1	1.39E-2
Connecticut	2.50E-1	3.60	7.93E-3
Delaware	2.72	6.48	5.85E-2
Florida	1.37	1.28E+1	6.92E-3
Georgia	8.63E-1	1.43E+1	2.17E-3
Idaho	8.56E-1	7.19	7.15E-2
Illinois	2.16	3.33E+1	2.80E-2
Indiana	2.80	3.34E+1	2.72E-2
Iowa	3.14	7.40E+1	2.43E-2
Kansas	8.00E-1	2.90E+1	5.97E-2
Kentucky	2.57	2.65E+1	3.98E-3
Louisiana	9.62E-1	1.08E+1	4.35E-2
Maine	8.07E-1	7.65E-1	5.97E-2
Maryland	6.11	1.09E+1	1.11E-2
Massachusetts	3.13	2.90	4.96E-3
Michigan	3.51	7.90	1.70E-2
Minnesota	4.88	1.85E+2	3.05E-2
Mississippi	8.70E-1	1.75E+1	1.07E-3
Missouri	1.89	3.43E+1	8.14E-3
Montana	9.27E-2	7.29	8.78E-3
Nebraska	8.78E-1	3.50E+1	2.39E-2
Nevada	5.65E-2	1.84	8.92E-3
New Hampshire	1.58	1.40	6.69E-2
New Jersey	3.29	4.25	1.82E-2
New Mexico	1.14E-1	4.13	1.38E-3
New York	8.56	5.83	1.88E-2
North Carolina	1.26	1.02E+1	6.32E-3
North Dakota	6.25E-1	1.18E+1	6.29E-2
Ohio	4.56	2.03E+1	1.70E-2
Oklahoma	7.13E-1	2.68E+1	2.80E-2
Oregon	4.53E-1	4.56	1.59E-2

Table A-4. Cattle densities and vegetable crop distribution for use with AIRDOS-EPA (continued).

State	Dairy cattle density #/km^2	Beef cattle density #/km^2	Vegetable crop fraction km^2/km^2
Pennsylvania	6.46	9.63	1.32E-2
Rhode Island	2.30	2.50	4.54E-2
South Carolina	7.02E-1	8.87	1.84E-3
South Dakota	8.85E-1	2.32E+1	1.20E-2
Tennessee	2.00E-1	2.11E+1	2.72E-3
Texas	5.30E-1	1.90E+1	5.77E-3
Utah	4.46E-1	2.84	1.83E-3
Vermont	8.88	4.71	1.08E-3
Virginia	1.84	1.31E+1	8.70E-3
Washington	1.50	5.62	5.20E-2
West Virginia	6.00E-1	6.23	1.16E-3
Wisconsin	1.43E+1	1.81E+1	1.78E-2
Wyoming	5.79E-2	5.12	1.59E-3

000248

Table A-5. Fatal cancer risk factors for selected radionuclides (see Table A-3 for default inhalation class and ingestion f_1 values).

Nuclide	Inhal. (μCi^{-1})	Ingest. (μCi^{-1})	Immer. ($m^3/\mu Ci$ yr)	Surface ($m^2/\mu Ci$ yr)
Ac-227	7.9E-02	3.5E-04	2.0E-07	6.5E-09
Ac-228	2.5E-05	3.2E-07	1.6E-03	3.1E-05
Ag-110	7.6E-10	2.3E-09	5.3E-05	1.0E-06
Ag-110m	6.0E-05	3.5E-06	4.8E-03	9.1E-05
Am-241	3.9E-02	3.0E-04	2.7E-05	8.5E-07
Ar-41	4.9E-10	-	2.3E-03	3.9E-05
Au-198	1.8E-06	6.9E-07	6.7E-04	1.4E-05
Ba-137m	5.1E-10	1.8E-09	1.0E-03	2.0E-05
Ba-140	1.6E-06	1.5E-06	3.1E-04	6.6E-06
Bi-210	7.5E-05	1.0E-06	-	-
Bi-211	1.8E-07	9.4E-09	7.8E-05	1.7E-06
Bi-212	6.2E-06	2.3E-07	3.2E-04	6.0E-06
Bi-214	2.0E-06	1.0E-07	2.8E-03	4.8E-05
C-14	4.1E-09	5.9E-07	0.0E+00	0.0E+00
Ce-144	3.2E-04	3.4E-06	2.8E-05	6.6E-07
Cm-244	2.6E-02	1.9E-04	1.2E-07	2.4E-08
Co-60	1.3E-04	9.7E-06	4.4E-03	7.7E-05
Cr-51	2.7E-07	2.5E-08	5.2E-05	1.1E-06
Cs-134	1.7E-05	2.5E-05	2.7E-03	5.3E-05
Cs-137	1.2E-05	1.7E-05	0.0E+00	0.0E+00
Eu-154	1.3E-04	2.0E-06	2.2E-03	4.1E-05
Fe-59	8.0E-06	1.7E-06	2.1E-03	3.7E-05
Fr-223	4.1E-07	1.6E-07	7.1E-05	1.8E-06
Ga-67	3.0E-07	1.2E-07	2.4E-04	5.3E-06
Gd-152	0.0E+00	0.0E+00	-	-
H-3	4.9E-08	3.4E-08	0.0E+00	0.0E+00
Hf-181	8.6E-06	7.2E-07	9.0E-04	1.9E-05
Hg-197	3.8E-07	1.5E-07	9.3E-05	2.4E-06
Hg-203	4.3E-06	3.8E-07	3.8E-04	8.2E-06
I-123	8.7E-08	1.2E-07	2.6E-04	5.8E-06
I-125	1.8E-06	2.7E-06	1.4E-05	6.3E-07
I-129	1.3E-05	1.9E-05	1.1E-05	5.7E-07
I-131	2.6E-06	3.7E-06	6.7E-04	1.4E-05
I-133	1.5E-06	2.2E-06	1.0E-03	2.1E-05
In-113m	2.6E-08	3.4E-08	4.2E-04	9.0E-06
Ir-192	2.5E-05	9.8E-07	1.4E-03	2.9E-05
K-40	5.0E-06	6.7E-06	2.8E-04	4.7E-06
Kr-83m	4.8E-11	-	1.4E-07	3.4E-08

Table A-5. Fatal cancer risk factors for selected radionuclides (see Table A-3 for default inhalation class and ingestion f_1 values) (continued).

Nuclide	Inhal. (μCi^{-1})	Ingest. (μCi^{-1})	Immer. ($m^3/\mu Ci$ yr)	Surface ($m^2/\mu Ci$ yr)
Kr-85	3.5E-10	-	3.7E-06	7.7E-08
Kr-85m	3.7E-10	-	2.6E-04	5.8E-06
Kr-87	1.7E-09	-	1.5E-03	2.5E-05
Kr-88	3.5E-09	-	3.9E-03	6.1E-05
La-140	2.5E-06	1.3E-06	4.2E-03	7.3E-05
Mn-54	4.3E-06	7.3E-07	1.5E-03	2.8E-05
Na-24	7.7E-07	6.9E-07	8.2E-03	1.2E-04
Nb-95	4.4E-06	3.8E-07	1.3E-03	2.6E-05
Ni-63	1.5E-06	1.4E-07	0.0E+00	0.0E+00
P-32	2.5E-06	2.6E-06	0.0E+00	0.0E+00
Pa-231	3.8E-02	1.9E-04	4.9E-05	1.2E-06
Pa-234m	1.5E-09	4.4E-09	2.0E-05	3.8E-07
Pb-210	1.4E-03	5.5E-04	-	-
Pb-211	2.6E-06	1.3E-07	8.8E-05	1.8E-06
Pb-212	4.1E-05	5.0E-06	2.4E-04	5.3E-06
Pb-214	2.7E-06	1.3E-07	4.1E-04	8.8E-06
Po-210	2.4E-03	1.4E-04	1.5E-08	2.9E-10
Po-212	5.7E-16	1.7E-17	0.0E+00	0.0E+00
Po-214	2.7E-13	8.0E-15	1.5E-07	2.8E-09
Po-215	5.3E-12	2.1E-13	2.5E-07	5.2E-09
Po-216	4.5E-10	2.6E-11	2.5E-08	4.9E-10
Po-218	5.4E-07	2.0E-08	0.0E+00	0.0E+00
Pu-238	4.0E-02	2.7E-04	1.3E-07	2.5E-08
Pu-239	3.9E-02	3.0E-05	1.3E-07	1.1E-08
Pu-240	3.9E-02	3.0E-05	1.2E-07	2.4E-08
Pu-241	2.8E-04	4.7E-06	0.0E+00	0.0E+00
Pu-242	3.7E-02	2.8E-05	1.1E-07	2.0E-08
Ra-223	2.9E-03	6.0E-05	2.1E-04	4.8E-06
Ra-224	1.1E-03	3.5E-05	1.7E-05	3.6E-07
Ra-226	2.8E-03	9.4E-05	1.1E-05	2.4E-07
Ra-228	5.8E-04	7.0E-05	1.0E-13	2.2E-14
Rh-103m	3.6E-09	5.0E-09	2.5E-07	2.8E-08
Rh-106	1.1E-09	3.3E-09	3.5E-04	7.0E-06
Rn-220	1.0E-07	-	8.8E-07	1.8E-08
Rn-222	4.7E-07	-	6.5E-07	1.3E-08
Ru-103	7.5E-06	5.1E-07	8.1E-04	1.7E-05
Ru-106	4.1E-04	5.5E-06	0.0E+00	0.0E+00
S-35	1.4E-07	1.4E-07	0.0E+00	0.0E+00

Table A-5. Fatal cancer risk factors for selected radionuclides (see Table A-3 for default inhalation class and ingestion f_1 values) (continued).

Nuclide	Inhal. (μCi^{-1})	Ingest. (μCi^{-1})	Immer. ($m^3/\mu Ci$ yr)	Surface ($m^2/\mu Ci$ yr)
Sb-124	2.0E-05	1.7E-06	3.4E-03	6.0E-05
Sc-46	2.4E-05	9.3E-07	3.6E-03	6.6E-05
Se-75	4.8E-06	4.2E-06	6.4E-04	1.4E-05
Sn-113	8.5E-06	5.0E-07	1.2E-05	4.2E-07
Sr-85	6.8E-07	4.9E-07	8.6E-04	1.8E-05
Sr-89	2.4E-06	1.9E-06	2.4E-07	4.6E-09
Sr-90	5.4E-05	3.1E-05	0.0E+00	0.0E+00
Tc-95	1.7E-08	3.3E-08	1.4E-03	2.7E-05
Tc-95m	3.0E-06	6.9E-07	1.1E-03	2.3E-05
Tc-99	7.4E-06	7.4E-07	8.0E-10	1.9E-11
Tc-99m	1.9E-08	2.4E-08	2.1E-04	4.7E-06
Th-227	4.6E-03	2.9E-06	1.7E-04	3.8E-06
Th-228	7.2E-02	1.3E-05	3.1E-06	8.6E-08
Th-230	2.9E-02	2.3E-05	5.9E-07	2.7E-08
Th-231	4.1E-07	2.2E-07	1.7E-05	5.6E-07
Th-232	2.9E-02	2.1E-05	2.8E-07	2.0E-08
Th-234	2.9E-05	2.2E-06	1.2E-05	3.0E-07
Tl-207	4.1E-09	1.0E-08	3.8E-06	7.3E-08
Tl-208	4.4E-09	1.4E-08	6.8E-03	1.0E-04
U-234	2.5E-02	7.5E-05	2.3E-07	2.4E-08
U-235	2.3E-02	7.3E-05	2.5E-04	5.5E-06
U-236	2.4E-02	7.1E-05	1.8E-07	2.2E-08
U-238	2.2E-02	7.4E-05	1.5E-07	1.9E-08
W-187	3.2E-07	3.6E-07	8.0E-04	1.6E-05
Xe-131m	3.1E-10	-	1.2E-05	4.7E-07
Xe-133	3.0E-10	-	5.1E-05	1.4E-06
Xe-133m	3.9E-10	-	4.7E-05	1.2E-06
Xe-135	5.8E-10	-	4.1E-04	8.9E-06
Y-90	4.7E-06	1.7E-06	0.0E+00	0.0E+00
Zn-65	1.3E-05	5.2E-06	1.0E-03	1.9E-05
Zr-95	8.9E-06	5.6E-07	1.3E-03	2.5E-05

A.3 REFERENCES

At74 Athey T.W., R.A. Tell, and D.E. Janes, 1974, The Use of an Automated Data Base in Population Exposure Calculations, from Population Exposures, Health Physics Society, CONF-74018, October 1974.

Mo79 Moore R.E., C.F. Baes, III, L.M. McDowell-Boyer, A.P. Watson, F.O. Hoffman, J.C. Pleasant, C.W. Miller, 1979, AIRDOS-EPA: A Computerized Methodology for Estimating Environmental Concentrations and Dose to Man from Airborne Releases of Radionuclides, EPA 520/1-79-009, EPA Office of Radiation Programs, Washington, D.C. 20460, December 1979.

NRC75 Memo from K. Eckerman, N. Dayem, R. Emch, Radiological Assessment Branch, Division of Technical Review, Nuclear Regulatory Commission, Code Input Data for Man-Rem Estimates (Washington, DC, October 15, 1975).

NRC77 U.S. Nuclear Regulatory Commission, Calculation of Annual Doses to Man from Routine Releases of Reactor Effluents for the Purpose of Evaluating Compliance with 10 CFR Part 50 Appendix I (Revision 1), Regulatory Guide 1.109, Office of Standards Development, Washington, D.C., October 1977.

Sj84 Sjoreen, A.L., and Miller, C.W., PRERPAR - A User Friendly Preprocessor to Create AIRDOS-EPA Input Data Sets, ORNL-5952, August 1984.

USDA72 United States Department of Agriculture, 1972, Food Consumption of Households in the United States (Seasons and Year 1965-1966), Household Food Consumption Survey 1965-1966, Report No. 12, Agricultural Reseach Service, USDA, Washington, DC (March 1972).

000252

APPENDIX B

MECHANICS OF THE LIFE TABLE IMPLEMENTATION OF THE RISK ESTIMATES

B.1 INTRODUCTION

This appendix describes the mechanics of the life table implementation of the risk estimates derived in Chapter 6.

B.2 LIFE TABLE ANALYSIS TO ESTIMATE THE RISK OF EXCESS CANCER

Radiation effects can be classified as stochastic or nonstochastic (NAS80, ICRP77). For stochastic effects, the probability of occurrence of the effect, as opposed to the severity, is a function of dose; induction of cancer, for example, is considered a stochastic effect. Nonstochastic effects are those health effects for which the severity of the effect is a function of dose; examples of nonstochastic effects include cell killing, suppression of cell division, cataracts, and nonmalignant skin damage. At the low levels of radiation exposure attributed to radionuclides in the environment, the principal health detriment is the induction of cancers (solid tumors and leukemia) and the expression, in later generations, of genetic effects. In order to estimate these effects, instantaneous dose rates for each organ at specified times are sent to a subroutine adaptation of CAIRD (Co78) contained in the RADRISK code. This subroutine uses annual doses derived from the transmitted dose rates to estimate the number of incremental fatalities in the cohort due to radiation induced cancer in the reference organ. The calculation of incremental fatalities is based on estimated annual incremental risks, computed from annual doses to the organ, together with radiation risk factors, such as those given in tha 1980 NAS report BEIR-3 (NAS80). Derivation of the risk factors in current use is discussed in Chapter 6.

An important feature of this methodology is the use of actuarial life tables to account for the time dependence of the radiation insult and to allow for competing risks of death in the estimation of risk due to radiation exposure. A life table consists of data describing age-specific mortality rates from all causes of death for a given population. This information is derived from data obtained on actual mortality rates in a real population. Mortality data for the U.S. population during the years 1969-1971 (HEW75) are used throughout this study.

The use of life tables in studies of risk due to low-level radiation exposure is important because of the time delay inherent in radiation risk. After a radiation dose is received, there is a minimum induction period of several years (latency period) before a cancer is clinically observed. Following the latency period, the probability of occurrence of a cancer during

a given year is assumed to be constant for a specified period, called a plateau period. The length of both the latency and plateau periods depends upon the type of cancer. During or after radiation exposure, a potential cancer victim may experience years of life in which he is continually exposed to risk of death from causes other than incremental radiation exposure. Hence, some individuals will be lost from the population due to competing causes of death and are not potential victims of incremental radiation-induced cancer.

It is assumed that each member of the hypothetical cohort is exposed to a specified activity of a given radionuclide. In this analysis, each member of the cohort annually inhales or ingests 1 pCi of the nuclide, or is exposed to a constant external concentration of 1 pCi/cm^3 in air or 1 pCi/cm^2 on ground surfaces. Since the models used in RADRISK are linear, these results may be scaled to evaluate other exposure conditions. The cohort consists of an initial population of 100,000 persons, all of whom are simultaneously liveborn. In the scenario employed here, the radiation exposure is assumed to begin at birth and continue throughout the entire lifetime of each individual. No member of the cohort lives more than 110 years. The span from 0 to 110 years is divided into nine age intervals, and dose rates to specified organs at the midpoints of the age intervals are used as estimates of the annual dose during the age interval. For a given organ, the incremental probability of death due to radiation-induced cancer is estimated for each year using radiation risk factors and the calculated doses during that year and relevant preceding years.

The incremental probabilities of death are used in conjunction with the actuarial life tables to estimate the incremental number of radiation-induced deaths each year. The estimation of the number of premature deaths proceeds in the following manner. At the beginning of each year, m, there is a probability, PN, of dying during that year from nonradiological causes, as calculated from the life table data, and an estimated incremental probability PR of dying during that year due to radiation-induced cancer of the given organ. In general, for the m-th year, the calculations are:

- $M(m)$ = total number of deaths in cohort during year m,

  $= [PN(m) + PR(m)] \cdot N(m)$

  $Q(m)$ = incremental number of deaths during year m due to radiation-induced cancer of a given organ

  $= PR(m) \cdot N(m)$

  $N(m+1)$ = number of survivors at the beginning of year m+1
  $= N(m) - M(m)$ where $(N(0) = 100,000)$.

PR is assumed to be small relative to PN, an assumption which is reasonable only for low-level exposures (Bu81), such as those considered here. The total number of incremental deaths for the cohort is then obtained by summing Q(m) over all organs for 110 years.

In addition to providing an estimate of the incremental number of deaths, the life table methodology can be used to estimate the total number of years of life lost to those dying of radiation-induced cancer, the average number of years of life lost per incremental mortality, and the decrease in the population's life expectancy. The total number of years of life lost to those dying of radiation-induced cancer is computed as the difference between the total number of years of life lived by the cohort assuming no incremental radiation risk, and the total number of years of life lived by the same cohort assuming the incremental risk from radiation. The decrease in the population's life expectancy can be calculated as the total years of life lost divided by tha original cohort size (N(0) = 100,000).

Either absolute or relative risk factors can be used. Absolute risk factors, given in terms of deaths per unit dose, are based on the assumption that there is some absolute number of deaths in a population exposed at a given age per unit of dose. Relative risk factors, the percentage increase in the ambient cancer death rate per unit dose, are based on the assumption that tha annual rate of radiation-induced excess cancer deaths, due to a specific type of cancer, is proportional to the ambient rate of occurrence of fatal cancers of that type. Either the absolute or the relative risk factor is assumed to apply uniformly during a plateau period, beginning at the end of the latent period.

The estimates of incremental deaths in the cohort from chronic exposure are identical to those obtained if a corresponding stationary population (i.e., a population in which equal numbers of persons are born and die in each year) is subjected to an acute radiation dose of the same magnitude. Since the total person-years lived by the cohort in this study is approximately 7.07 million, the estimates of incremental mortality in the cohort from chronic irradiation also apply to a one-year dose of the same magnitude to a population of this size, age distribution, and age-specific mortality rates. More precise life table estimates for a specific population can be obtained by altering the structure of the cohort to reflect the age distribution of a particular population at risk.

In addition, since the stationary population is formed by superposition of all age groups in the cohort, each age group corresponds to a segment of the stationary population with the total population equal to the sum of all the age groups. Therefore, the number of excess fatal cancers calculated for lifetime exposure of the cohort at a constant dose rate would be numerically equal to that calculated for the stationary

population exposed to an annual dose of the same magnitude. Thus, the risk estimates may be reported as a lifetime risk (the cohort interpretation) or as the risk ensuing from an annual exposure to the stationary population. This equivalence is particularly useful in analyzing acute population exposures. For example, estimates for a stationary population exposed to annual doses that vary from year to year may be obtained by summing the results of a series of cohort calculations at various annual dose rates.

000256

B.3 REFERENCES

Bu81 Bunger, B.M., Cook, J.R., and Barrick, M.K.,"Life Table Methodology for Evaluating Radiation Risk: An Application Based on Occupational Exposures," Health Phys. 40, 439-455.

Co78 Cook, J.R., Bunger, B., and Barrick, M.K., A Computer Code for Cohort Analysis of Increased Risks of Death (CAIRD), EPA 520/4-78-012, 1978.

HEW75 U.S. Department of Health Education and Welfare, "U.S. Decennial Life Tables for 1969-1971," Vol. 1., No. 1., DHEW Publication No. (HRA) 75-1150, Public Health & Service, Health Resources Administration, National Center for Health Statistics, Rockville, Maryland, 1975.

ICRP77 International Commission on Radiological Protection, "Recommendations of the International Commission on Radiological Protection," Ann. ICRP, Vol. 1, No. 1, Pergamon Press, 1977.

NAS80 National Academy of Sciences - National Research Council, The Effects on Population of Exposure to Low Levels of Ionizing Radiation, Committee on the Biological Effects of Ionizing Radiation, Washington, D.C., 1980.

APPENDIX C

OVERVIEW OF TECHNIQUES USED TO QUANTIFY UNCERTAINTY IN ENVIRONMENTAL RISK ASSESSMENTS

C.1 INTRODUCTION

The doses and risks attributable to airborne emissions from the various facilities and categories of facilities addressed in Volume II have been estimated using the models and assumptions described in this volume. The calculational methods use monitored data characterizing airborne emissions and then apply mathematical models to estimate the radionuclide concentrations and radiation fields in the environment. These calculated values are then used to derive radiation doses to individuals exposed to these radionuclides. The final products of this exercise are the doses to individuals and populations, expressed in units of mrem/yr and person-rem/yr, respectively. In addition, cancer risks, expressed in terms of the additional lifetime risk to individuals and the number of additional cancer fatalities in the exposed populations, are also estimated.

Rather than using mathematical models to assess impacts, it would be preferable to measure the actual impacts directly; i.e., radionuclide concentrations and radiation fields in the environment, radionuclide concentrations in the various organs of the exposed populations, and the increased incidence of cancer, if any, due to the exposures. However, this is not possible because the radionuclide releases do not generally result in detectable levels in the environment or in the exposed members of the population. Accordingly, the actual or potential impacts of the emissions must be predicted using calculational models.

The dose and risk estimates provided in this BID for each facility or release category should be considered a reasonable assessment which does not significantly underestimate or grossly overestimate impacts and is of sufficient accuracy to support decisionmaking. Since each facility is unique, the models used to calculate doses and risks are generalizations and simplifications of the processes which result in exposure and risk. In addition, our ability to model the processes is also limited to a degree by the availability of data characterizing each site and our understanding of the processes.

In Volume II, doses and risks for each category are presented as discrete values; i.e., mrem/yr; person-rem/yr; individual probability of a fatal cancer, and number of cancer fatalities per year in a population. Each of these calculated values is an expression of impact on an individual or small group of individuals or on a population as a whole. The values presented, however, are of more use to decision-makers when there is some characterization of their uncertainty. For example, a

small impact may be calculated; i.e., 1.0E-6 lifetime risk of cancer for an individual. However, if the uncertainty in this number is several orders of magnitude, the real risk of this source of emission may in fact be higher than another source of emission which has a calculated risk of 1.0E-5 lifetime risk of cancer but has a small degree of uncertainty. Alternatively, an upper bound risk of 1.0E-2 lifetime risk may be calculated and appear to represent an unacceptable risk. However, the actual risk may be an order of magnitude smaller. This situation often occurs when, due to limited information and uncertainty in the calculational parameters, conservative assumptions are used throughout the calculation in order to ensure that the risks are not underestimated.

The Office of Radiation Programs has initiated a quantitative uncertainty analysis to supplement the semiquantitative analysis provided in Volume I of the BID. This appendix summarizes the quantitative uncertainty analysis techniques currently under review by the Office.

C.2 QUANTITATIVE UNCERTAINTY ANALYSIS

The use of quantitative uncertainty analysis to address environmental risks became widespread following the Reactor Safety Study (NRC75), and was recommended by the Agency in support of environmental risk assessments in 1984 (EPA84). The technique results in a range of values of impact rather than a discrete value by using a range of values for the calculational input parameters. In this way, the impacts of a given technological activity can be bounded and different technologies can be intercompared. In cases where probability distributions can be assigned to the value of a given set of calculational parameters, the results are expressed as probability distributions. Risks can thereby be expressed as "best estimate" values, 90 percentile values or 99 percentile values, etc. Figure C-1 presents an example of the output of such an analysis. The results are expressed as a cumulative probability distribution. Inspection of the distribution reveals that, in this case, there is about a 90 percent level of confidence that the technological activity will result in less than 1 mortality per 10,000 years, and that the best estimate (i.e., the 50 percentile value) is less than 0.1 fatality per 10,000 years.

Though the concept is simple, the implementation and interpretation of uncertainty analyses performed in support of environmental risk assessment has evolved into an area of specialization founded in work performed at Carnegie Mellon University (Mo78). The use of quantitative uncertainty analyses in support of environmental radiological risk assessment has been steadily increasing since its use in the Reactor Safety Study (NRC75). Selected uncertainty analyses, which are especially relevant to this Background Information Document, include work performed by Hoffman (NUREG79, NUREG81), Rish (Ri83), and Crick (Cr88).

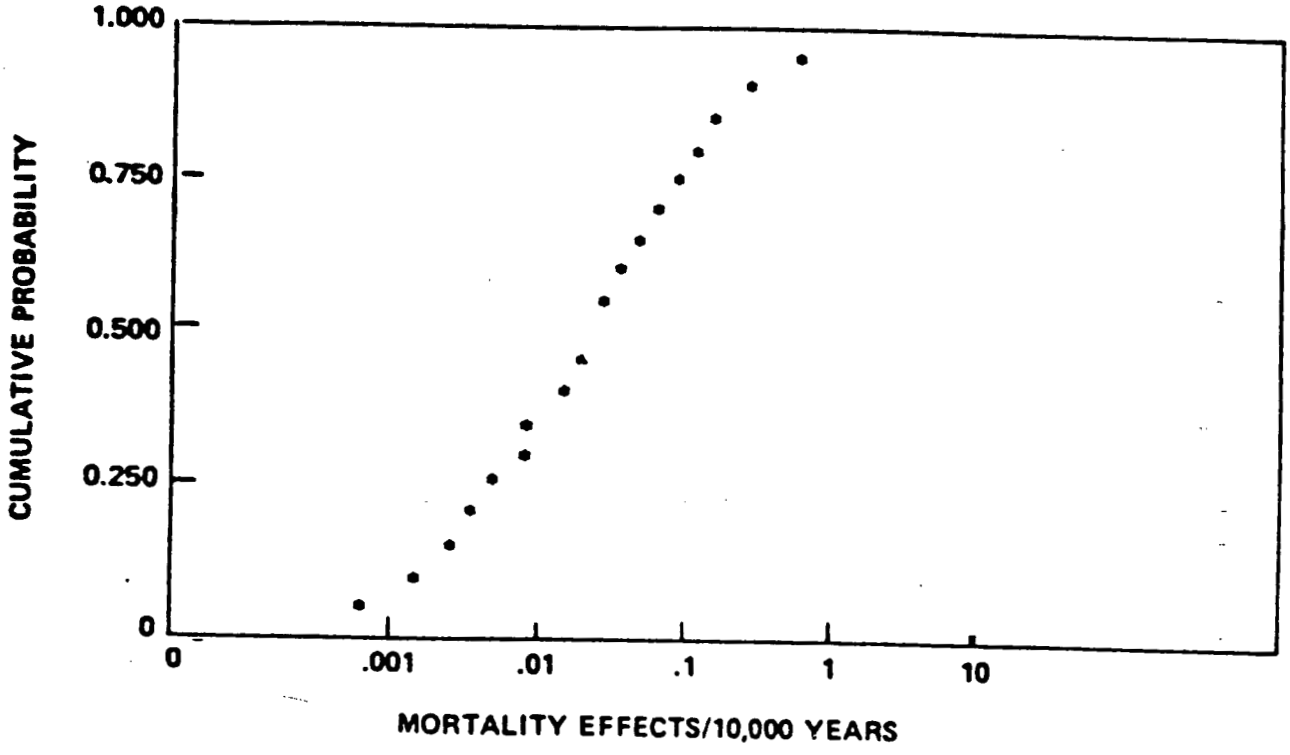

Figure C-1. Example of the output of a risk assessment using quantitative uncertainty analyses (from Ri83).

These applications of uncertainty analysis are currently undergoing review to identify the approach most appropriately applied to the analyses presented in Volume II of this BID. Each application uses a somewhat different calculational approach and set of input data. The appropriateness of the approaches depends on types of risks being calculated and on the level of analysis required to support rulemaking. The following describes the different approaches being considered and the data requirements.

C.3 LEVEL OF ANALYSIS

The results of any risk assessment are uncertain due to the following three sources of uncertainty (Cr88):

(1) Modeling uncertainties
(2) Completeness uncertainties
(3) Parameter uncertainties

Modeling uncertainties pertain to the formulation of mathematical models used to predict risk and the degree to which they accurately represent reality. One way to address this source of uncertainty is to perform the analysis using a set of feasible alternative model structures.

In general, modeling uncertainty is the most difficult component to assess since it is often impossible to justify a set of plausible alternative models in light of the available data and to assign probabilities to these alternatives. To an extent, modeling uncertainty is incorporated into the estimates of uncertainty, e.g., the uncertainty in risk factors for low-LET radiation includes a consideration of the uncertainty in the form of the dose-response and risk projection models. On the other hand, as noted in Chapter 5, the uncertainty in formulation of metabolic models is a serious problem in estimating dose conversion factors for many radionuclides. Modeling uncertainty for dispersion and pathway calculations pose similar problems. As a result, the Agency's estimates of uncertainty in radiological risk do not fully reflect the contribution of modeling uncertainty.

Completeness uncertainties are applicable to this BID, as they are to all risk assessments. The issue has to do with whether all significant radionuclides and pathways of exposure have been addressed. For most facilities addressed in this BID, the source terms are well characterized and there is little likelihood that a significant undetected radionuclide release is occurring. With regard to pathways of exposure, the analyses assume that all the major pathways of exposure are present at all sites, and it is more likely that a pathway has been assumed to be present which in fact is not. Accordingly, except for some specific categories of emissions, such as C-14 and H-3 emissions from research hospitals, this source of uncertainty is not expected to be an important contributor to overall uncertainty.

Uncertainties in the values of the calculational input parameters are believed to be major sources of uncertainty in the risk assessments provided in the BID. Accordingly, the quantitative uncertainty analysis being developed is focusing on appropriate methods for quantifying this source of uncertainty.

The uncertainty in input parameters, such as dose and risk factors, reflects consideration of both parameter and modeling uncertainties. For purposes of a quantitative uncertainty analysis, those considerations are combined and will be treated in subsequent calculations as an equivalent parameter uncertainty.

C.4 UNCERTAINTY ANALYSIS DUE TO PARAMETER UNCERTAINTY

The assessment of this source of uncertainty involves the development of quantitative characterizations of the uncertainties associated with key model parameters. These characterizations can be probability distributions, bounding ranges or a set of discrete values. Once key uncertain parameters are characterized, their uncertainties are propagated through the models using a simulation technique producing a probability distribution representing uncertainty about the risk assessment model results. To describe how such an analysis is performed, it is convenient to use a specific example.

Table 13-10 of Volume II reveals that the highest calculated lifetime risk to the maximum individual residing in the vicinity of phosphogypsum stacks is 2.0E-4 for an individual located 800 meters downwind of the Royster Phosphate stack in Palmetto, Florida. The question that an uncertainty analysis needs to answer is what is the possible range of values of this risk estimate for a real person currently residing in the vicinity of that stack. It would be desirable to construct a probability distribution of the risk, similar to the example provided in Figure C-1. It would also be desirable to construct a similar distribution for a hypothetical individual who may reside in the vicinity of the stack at some future date. Accordingly, two analyses may be needed, one for the actual residents and one for a possible future resident.

The risk from this source of exposure is from the radon gas emanating from the phosphogypsum stacks. The calculation of risk involves the multiplication of five values:

(1) the radon source term from the stack, expressed in terms of Ci/yr,

(2) the atmospheric dispersion factor, which is used to calculate the average annual airborne radon concentration at the receptor location,

(3) the radon daughter conversion factor, which converts the calculated airborne radon concentration to radon daughter concentration in working levels (WL), which is the parameter that is directly related to risk,

(4) exposure duration in hours per year, and

(5) the risk conversion factor, which converts risk expressed in WL to probability of cancer.

The product of each of these parameters, along with appropriate unit conversions, results in an estimate of lifetime cancer risk due to exposure. Each of the five parameters has some degree of uncertainty, which contributes to the uncertainty in the calculated risk.

The source term (Ci/yr) is itself an estimated value which varies as a function of time. However, since this is a lifetime risk, it is necessary to estimate the uncertainty in the <u>average</u> annual release rate over many years. This distinction is important because it virtually eliminates the need to explicitly consider uncertainties associated with the time-varying nature of the source term. If the concern was with the maximum risk to an individual in any one year, the time-varying nature of the source term would need to be explicitly addressed.

Ideally, based on extensive measurements made over the area of the stack over prolonged periods of time, the source term could be accurately defined. However, the source term has been approximated using a limited number of samples and a conservative set of assumptions which provides assurance that the real source term has not been underestimated. In a quantitative uncertainty analysis, a source term probability distribution would be constructed based on a close inspection of the measurements and assumptions used in the analysis.

The second calculational parameter is the atmospheric dispersion factor, which is used to derive the average annual radon concentration at the receptor location. The dispersion factor is expressed in units of sec/m^3, so that when it is multiplied by the release rate in Ci/yr, along with the appropriate unit conversion, the result is the average annual radon concentration at the receptor location. Uncertainty in the actual location of the nearest resident is an important source of uncertainty.

A second important, and less obvious source of uncertainty, is the method used to estimate dispersion. The accuracy of this method is provided in Chapter 4. As applied to this particular problem, the uncertainties increase due to the non-uniformity of the area source term. This could either increase or decrease the risk estimate, depending on the location of the receptor relative to areas of the pile that are the major contributors to the source term. Note that the magnitude of this source of

uncertainty is much smaller when performing population doses since, as the distance from the receptor to the pile increases, the source term behaves more and more as a point source relative to the receptor.

Considering all of these factors, an uncertainty distribution is developed for the atmospheric dispersion factor. Note that the distribution of the atmospheric dispersion factors for the maximum individual and the population risk assessments will differ.

The third parameter converts radon concentration to radon daughter concentration, which is the parameter of interest. The uncertainty in this value is well characterized, and constructing a reasonable probability distribution for this parameter will be a relatively straight forward exercise.

The fourth parameter, occupancy time, is the fraction of the time the individual is located at the receptor location. For purposes of this BID, the individual at maximum risk is presumed to be a lifetime resident at the presently occupied location that results in the greatest lifetime risk. Hence the value of this factor is the average fraction of each day that a resident is expected to be within his or her home. The presumption of lifetime residence does not have any uncertainty; it is a given condition for the assessment.

The last parameter, the risk factor, relates exposure to risk. As discussed in Chapter 6, values for this parameter are based on epidemiological data and only apply to large populations. It is assumed that the maximum individual has the average radiosensitivity, and a risk factor probability distribution is developed based on uncertainty in the average risk factor.

It is apparent from this discussion that in order to perform an uncertainty analysis, it is necessary to clearly define the risk that is being estimated. Is the risk for a real or hypothetical person, is it the maximum or the average risk, and is it the current or possible future risk that is of concern? The individuals constructing the distributions must clearly understand the objectives of the analysis or the resulting distributions will be incompatible.

Upon completion of this exercise, each of the calculational parameters will have been assigned probability distributions. These distributions are used as input to models that propagate the uncertainties.

C.5 TECHNIQUES FOR PROPAGATING UNCERTAINTIES

The basic approaches used to propagate uncertainties are method of moments techniques, or Monte Carlo techniques. Method of moments is the standard method for propagating error described

in fundamental texts on statistics. This method propagates errors by calculating a linear combination of the moments for each model factor. Since these coefficients depend on the values of the parameters, the method is only useful when the range of each parameter is small enough that it will not significantly perturb the coefficients. Even if these conditions are not met, it is possible to establish reasonable estimates of uncertainty using this technique.

The alternative to the method of moments is the use of a Monte Carlo, or Monte Carlo type, analysis. This approach can consume considerable computer resources but has the potential to yield more satisfying results. The technique calculates risk in the same manner as described above, except it performs the calculation many times, each time randomly selecting an input value from each of the probability distributions representing each parameter. The output is a risk distribution. The more times the calculation is performed, the more complete the results. The number of repetitions will determine the precision of the output. The more repetitions and the larger the number of calculational parameters treated as distributions in the model, the greater the computer resource requirements.

By controlling how the values are sampled from each distribution, parameters that are directly or indirectly correlated can also be modeled. In addition, by selectively fixing the value of individual parameters, the parameters that are important contributors to uncertainty can be identified.

A number of computerized techniques are available to perform quantitative uncertainty analysis. Descriptions of these methods, provided by Crick (Cr88) and Hofer (Ho85), are being reviewed in order to determine which methods are most appropriate for quantifying the uncertainty in the risk estimates provided in the BID. In addition, a comprehensive guide on uncertainty analysis is scheduled for publication in the spring of 1989 (Mo89). The publication will be the first comprehensive treatment of this subject.

C.6 PARAMETER DISTRIBUTIONS

The final and by far the most important issue pertinent to the implementation of a quantitative uncertainty analysis is the completeness and reliability of the data characterizing the distributions of each of the calculational parameters. The number of radionuclides, pathways and parameters used in the risk assessments (see the AIRDOS input sheets in the Appendix to Volume II) is very large. However, through a screening process, the number of radionuclides and pathways that require explicit analysis can be sharply reduced.

Once the parameters of interest are identified, it is necessary to evaluate how each parameter is used in the risk calculations; that is, is it used to calculate risks to a

population or an individual; and is it used to calculate annual or lifetime risk?

Once this is determined, probability distributions for each parameter, as it is used in the risk calculations, are constructed. A number of such distributions have been constructed in the past which will facilitate this process (NUREG79, NUREG81, Ri83). In addition, it will likely be necessary to elicit subjective probability distributions for specific parameters by interviewing researchers specializing in each parameter. In order to obtain unbiased distributions, formal elicitation techniques, as described by Hogarth (Ho75), may be required.

C.7 REFERENCES

Cr88 Crick, M.J., et al., Uncertainty Analysis of the Foodchain and Atmospheric Dispersion Modules of MARC, NRPB-R184, May 1988

EPA84 U.S. Environmental Protection Agency, Proposed Guidelines for Exposure Assessment, Request for Comments, 49 FR 46304, November 23, 1984.

Ho75 Hogarth, R.M., "Cognitive Processes and the Assessment of Subjective Probability Distributions", J. of the Am. Statistical Assoc., 70(350), 271, June 1975.

Ho85 Hofer, E., and Krzykacz, B., CEC Study Contract: Uncertainty analysis of the computational assessment of the radiological consequences of nuclear accidents. Final Report to Part I (October 1984) and to Part II (July 1985).

Mo78 Morgan, M.G., et al., "Sulfur control in coal-fired power plants: A probabilistic approach to policy analysis," APCA Journal, 28(10) 993, 1978.

Mo89 Morgan, M.G., and Henrion, M., Uncertainty: A Guide to Dealing with Uncertainty in Quantitative Risk and Policy Analysis, Cambridge University Press (scheduled for publication in the summer of 1989).

NRC75 U.S. Nuclear Regulatory Commission, Reactor Safety Study: An Assessment of Accident Risks in United States Commercial Nuclear Power Plants, WASH-1400, October 1975.

NUREG79 U.S. Nuclear Regulatory Commission, A statistical analysis of selected parameters for predicting food chain transport and internal dose of radionuclides, Hoffman, F.O., and Baes, C.F., III (eds.), NUREG/CR-1004, 1979.

NUREG81 U.S. Nuclear Regulatory Commission, Variability in dose estimate associated with food chain transport and ingestion of selected radionuclides, by F.O. Hoffman, R.H. Gardner, and K.F. Eckerman, NUREG/CR-2612, 1981.

Ri83 Rish, W.R., Mauro, J.M., and Schaffer, S.A., "Analyses of Uncertainties in the EPA Ore Body Release and River Mode Exposure Pathway Models Used as the Bases for Proposed Geologic Repository Release Limits", Final Report to Battelle Project Manager Division (BPMD) for the Department of Energy, June 10, 1983.

000267

*U.S. Government Printing Office: 1990-718-804