PATH FORWARD SUMMARY REPORT - 8064

ON CONTAINER OPTIMIZATION

FOR VITRIFIED K-65 AND SILO 3 RESIDUES

October 5, 1995

Prepared by

Fernald Environmental Restoration Management Corporation

Prepared for

U.S. Department of Energy
Fernald Field Office

Under Contract DE-AC24-92OR21972

10/05/95

TABLE OF CONTENTS

Table of Contents ii

List of Figures iii

List of Tables iii

Common Acronyms and Abbreviations iv

Executive Summary ES-1

1.0 Introduction 1-1

2.0 Container Optimization Study 2-1
- 2.1 Proper Classification of OU4 Vitrified Material 2-1
  - 2.1.1 Low Specific Activity Material 2-1
    - 2.1.1.1 LSA Criteria 49 CFR § 173.403 (60 FR 50292) 2-2
  - 2.1.2 Fissile-Exempt Material 2-3
    - 2.1.2.1 Fissile-Exempt Criteria 49 CFR § 173.453 (60 FR 50292) 2-3
- 2.2 DOT Quantity Limitations Per Package 2-5
  - 2.2.1 Packaging Based on LSA-II Requirements 2-6
  - 2.2.2 Packaging Based on Normal Form Radioactive Material Requirements 2-6
- 2.3 Compliance with DOT Radiation Level Limitations 2-7
- 2.4 Intermodal and Direct Truck Shipment Comparison 2-9
- 2.5 Transportation Risk Assessment 2-10
- 2.6 NEPA Supplemental Analysis 2-11
- 2.7 Optimum Transportation Configuration for Operable Unit 4 Material 2-14

3.0 Path Forward 3-1
- 3.1 Cost Effectiveness of Compliance 3-1
- 3.2 Approval of OU4 Silo Material as LSA-II 3-2
- 3.3 Risk Associated with Transport of Vitrified Material 3-2
- 3.4 NTS Acceptance of Vitrified Material 3-2
- 3.5 Compliance with CERCLA "offsite rule" 3-2
- 3.6 Customized Container Design 3-3
- 3.7 Customized Container Development 3-4

4.0 Bibliography 4-1

APPENDIX A LSA-II Determination for Vitrified Material Under the New Regulations (60 FR 50292) A-1

APPENDIX B Spreadsheets for Determination of A_2 Quantity Limits for K-65 and Silo 3 Vitrified Material Based On New Regulations B-1

APPENDIX C Manufacturer Design Specifications for Endurok-112™ and Squarepak-112™ Containers C-1

APPENDIX D DOE-NV Letter Approving Byproduct Material as "Small Volume" D-1

LIST of FIGURES

3.1 Proposed Schedule for Acceptance of Waste at NTS 3-3

3.2 Summary Schedule for PRDA Process 3-5

LIST of TABLES

2-1 Comparison of Impacts to Receptors During Off-Property Waste Transportation for Proposed Packaging Options 2-12

2-2 Comparison of Accident Rates for Intermodal Train/Truck and Truck-Only Transport 2-13

A-1 K-65 Material LSA-II Determination Under the New Regulations (60 FR 50292) A-3

A-2 Silo 3 Material LSA-II Determination Under the New Regulations (60 FR 50292) A-4

COMMON ACRONYMS and ABBREVIATIONS

ALARA	As Low As Reasonably Achievable
CERCLA	Comprehensive Environmental Restoration, Compensation, and Liability Act
CFR	Code of Federal Regulations
DOE	U.S. Department of Energy
DOT	U.S. Department of Transportation
EIS	Environmental Impact Statement
FERMCO	Fernald Environmental Restoration Management Corporation
FR	Federal Register
FS/PP-EIS	Feasibility Study/Proposed Plan-Environmental Impact Statement
ft^3	cubic feet
IAEA	International Atomic Energy Agency
LCR	Lifetime Cancer Risk
L,W,H	Length, Width, Height
LSA	Low Specific Activity
NEPA	National Environmental Policy Act
NTS	Nevada Test Site
OU4	Operable Unit 4
PRDA	Program Research and Development Announcement
ROD	Record of Decision
SEG	Scientific Ecology Group, Inc.
USEPA	United States Environmental Protection Agency

DOE F 1325.8 (5-83)

File 2.2.5.3

United States Government

Department of Energy

Fernald Field Office

memorandum

DATE: OCT 3 1 1995

DOE-0103-96

8064

REPLY TO ATTN OF: FN:Skintik

SUBJECT: CHANGE IN THE FERNALD ENVIRONMENTAL MANAGEMENT PROJECT OPERABLE UNIT 4 TRANSPORTATION MODES

TO: Donald R. Elle, NEPA Compliance Officer, DOE-NV

In support of the Fernald Environmental Management Project (FEMP) Operable Unit 4 remedial design effort being performed under the Comprehensive Environmental Response, Compensation and Liability Act (CERCLA), the attached Final Path Forward Summary Report presents the outcome of a waste container and transportation study conducted to further refine the analysis performed by the Operable Unit 4 Feasibility Study/Proposed Plan-Environmental Impact Study (FS/PP-EIS). Based upon information presented in this report, the shipment of the containerized Operable Unit 4 vitrified waste to the Nevada Test Site (NTS) via exclusive-use truck shipments is preferred over the intermodal (rail/truck) shipments evaluated in the FS/PP-EIS.

The Operable Unit 4 FS/PP-EIS, which was distributed to stakeholders in Nevada, provided a detailed evaluation of only intermodal shipments (i.e., rail/truck). A change from the preferred alternative evaluated in an EIS typically requires a Supplemental Analysis pursuant to the National Environmental Protection Act (NEPA). In this case, the Supplemental Analysis should evaluate potential risks to human health and the environment associated with the "truck only" shipments. A revised policy statement was issued by the Department of Energy (DOE) in June of 1994 that allowed for the procedural aspects of NEPA to be addressed by the CERCLA process for CERCLA actions, as long as the substantive aspects of NEPA are carried out. Consistent with the revised policy statement, the Final Path Forward Summary document has fully integrated the values of a NEPA Supplemental Analysis (i.e., risk and impact analysis discussions). The last item that must be addressed to meet the substantive aspects of NEPA is the notification of the appropriate stakeholders.

The conclusions of the approach outlined in this Final Path Forward Summary document were presented to the Fernald stakeholders at the June 29, 1995, Public Meeting held at the Plantation in Harrison, Ohio, which focused upon the Operable Unit 1 and Operable Unit 4 packaging and transportation plans. The Operable Unit 4 approach was accepted by the stakeholders with no concerns. A copy of the Final Path Forward Summary has been placed in the post-Record of Decision files at the Public Environmental Information Center and made available to the public.

Recycled and Recyclable

Attached is a copy of the Final Path Forward Summary to allow you the freedom to distribute information provided in the report to the Nevada stakeholders as you determine appropriate. Based on the incorporation of NEPA values into the Final Path Forward Summary and the efforts to involve Fernald and Nevada stakeholders in this process, it is the position of the Department of Energy, Fernald Area Office (DOE-FN) that NEPA Compliance has been fully addressed for this matter.

If you have any questions or require further assistance on this matter, please contact Randi Allen at (513) 648-3102 or Ed Skintik at (513) 648-3151.

Jack R. Craig
Director

Attachment: As Stated

cc w/o att:

S. Smiley, DOE-OH
N. Akgunduz, DOE-FN
R. Allen, DOE-FN
T. Hagen, FERMCO
D. Ofte, FERMCO
E. Woods, FERMCO
M. Yates, FERMCO

EXECUTIVE SUMMARY

The purpose of this Path Forward Summary report is to summarize the results of packaging studies supporting the Operable Unit 4 (OU4) remedial design and identify and define the preferred transportation configuration for off-site shipment and disposal of the treated OU4 remedial waste at the Nevada Test Site (NTS). This Path Forward Summary presents the requirements for successfully implementing a packaging and transportation scenario which is logistically feasible, cost-effective, and protective of human health and the environment. The *Final Record of Decision for Remedial Action at Operable Unit 4, December 1994*, stated that vitrified waste would be shipped to the NTS by either intermodal (rail/truck) shipments or by truck-only shipments. Based on information provided in this report, truck-only shipments have been identified as the preferred mode of transport. Since the OU4 Feasibility Study/Proposed Plan-Environmental Impact Statement (FS/PP-EIS) evaluated in detail only the intermodal shipments, a Supplemental Analysis is required to evaluate and present risk impacts associated with truck-only shipments. This report serves as a Supplemental Analysis under the National Environmental Policy Act (NEPA) for documenting DOE's assessment of any potential significant impacts or risk to human health and the environment that result from the truck-only transportation mode proposed in this Path Forward Summary report.

In support of the OU4 remedial design effort, a detailed waste container and transportation optimization study was conducted to further refine the assumptions and analysis performed by the OU4 FS/PP-EIS. The supporting study identified U.S. Department of Transportation (DOT) packaging requirements, promulgated prior to September 1995, regarding quantity limitations (per package) for radioactive material. The requirements identified in the study have a significant impact upon the logistics, costs, and safety concerns for the transportation and disposal method presented in the OU4 FS/PP-EIS.

The optimization study evaluated various packaging and transportation scenarios for shipping radioactive material that would be in full compliance with DOT requirements promulgated prior to September 1995, and that would be protective of human health and the environment. The study identified an optimized compliant scenario in which vitrified waste would be packaged in 3-gallon Type A containers, overpacked for consolidation, and transported by truck to the NTS. Though in compliance with all pertinent DOT requirements, this scenario presented radiological exposure concerns for on-site workers as well as excessive costs.

Review of proposed DOT shipping requirements for radioactive material proposed in the November 14, 1989, Federal Register (54 FR 47454) and discussions with DOT-HQ personnel led to the identification of a safer, more cost-effective packaging and transportation configuration. These regulations were recently promulgated on September 28, 1995 (60 FR 50292).

The new regulations, promulgated by the DOT, make U.S. requirements more consistent with the requirements established by the International Atomic Energy Agency (IAEA) in their Safety Series Number 6 publication, *Regulations for the Safe Transport of Radioactive Material*. Under the new regulations, the OU4 vitrified material would be classified as low specific activity-II (LSA-II) material and shipped in customized containers that would meet DOT design requirements. Specifically, the OU4 vitrified material is defined as, "material in which the activity is distributed throughout and the estimated average specific activity does not exceed

10^{-4} A_2/g[1] for solids" (60 FR 50292, 49 CFR § 173.403). The intent of this requirement minimizes the potential resultant radiological hazards that can arise following failure of a compliant package and dispersal of its contents which may come into human contact after a transportation accident.

The customized containers developed and utilized in accordance with the new regulations offer a safe and cost-effective transportation and disposal configuration. The number of containers required under the new regulations would be reduced, resulting in a reduction in material handling operations, a reduction in the number of shipments required to transport the material to the NTS, a reduction in worker exposure concerns, and a reduction in cost. In addition, the NEPA Supplemental Analysis conducted for truck-only transport resulted in no additional significant risks or impacts being identified due to the change from intermodal to truck-only.

Based upon the remedial project schedule demands, this Path Forward Summary/Supplemental Analysis recommends that DOE approve shipping OU4 silo material as LSA-II material as defined in 60 FR 50292. Shipping the OU4 silo material as LSA-II would not pose an increased risk to human health or the environment.

---

[1] The A_2 value is the maximum activity , in Curies, of radioactive material, other than special form, permitted in a Type A package. A_2 values for individual radionuclides are listed in 49 CFR § 173.435 or they may be derived in accordance with the procedure prescribed in 49 CFR § 173.433.

1.0 INTRODUCTION

Based on the Final Record of Decision (ROD) for Remedial Actions at Operable Unit 4 (OU4), the selected remedy for the remediation of the Silos 1, 2, and 3 residues is treatment of the residues by on-site vitrification, followed by the off-site disposal at the Nevada Test Site (NTS). Because of the radioisotope content associated with the silo residues, several material handling and regulatory issues related to the packaging and transportation of the vitrified material have to be resolved in order to transport the vitrified waste material to the NTS.

To resolve these issues, Fernald Environmental Restoration Management Corporation (FERMCO) tasked Foster-Wheeler Environmental Corporation to conduct an investigation to determine an optimum packaging and transportation configuration for the vitrified waste material that not only would be cost-efficient, and comply with pertinent transportation requirements promulgated prior to 1995, but more importantly, be protective of human health and the environment during transportation. Conclusions drawn from the study and subsequent activities directly impact final remedial design and remedial action activities.

The purpose of this report is to summarize the results of previous analyses and packaging studies and to identify the path forward in order to implement the safest most cost-effective transportation configuration for the off-site shipment and disposal of vitrified waste material from the remediation of Operable Unit 4 (OU4) of the Fernald Environmental Management Project (Fernald). The principal wastes of concern for this study are by-product residues contained in Silos 1 and 2, known as K-65, and Silo 3. For purposes of waste management and proper disposal at the NTS, the material is classified as by-product material as defined in Section 11(e)(2) of the Atomic Energy Act of 1954. For purposes of proper transportation, the material is governed by the U.S. Department of Transportation (DOT) regulations under 49 CFR Subtitle B Other Regulations Relating to Transportation, Chapter I, Research and Special Programs Administration, Subchapter C, Hazardous Materials Regulations.

This report has integrated pertinent environmental impacts associated with the transportation of OU4 vitrified material and will serve as a Supplemental Analysis under the U.S. Department of Energy's (DOE) National Environmental Policy Act (NEPA) regulations and guidance documents. This NEPA Supplemental Analysis was conducted in accordance with 10 CFR 1021, "National Environmental Policy Act, Implementing Procedures and Guidelines" to determine whether a Supplemental Environmental Impact Statement (EIS) should be prepared in response to the change in transportation modes (i.e., from combination of rail/truck to truck only).

Based on the information presented by Foster-Wheeler in their final report, the optimum method for compliance with all pertinent regulations promulgated prior to 1995 for the transportation of a single shipment of vitrified K-65 silo material would be packaging the vitrified waste material into 3-gallon Type A containers followed by overpacking the 3-gallon containers into a concrete vault (SQ-112 Squarepak™ or equivalent). Based on a maximum payload of 42,000 pounds to meet the legal weight requirements for over the road vehicles, approximately 114 3-gallon containers could be placed into one concrete vault overpack. A maximum of two concrete vaults would be placed onto a closed transport vehicle (truck) for shipment under exclusive use conditions directly to the NTS.

The optimum configuration for compliance with all pertinent regulations promulgated prior to September 1995 for the transportation of a single shipment of vitrified Silo 3 material was determined to be packaging vitrified waste material into 3-gallon Type A containers followed by overpacking 120 3-gallon containers into a B-25 metal box. A maximum of five B-25 overpacks would be placed in a closed transport vehicle and would be transported under exclusive use conditions directly to the NTS.

The packaging configurations described above would require approximately 2,616 truck shipments for the vitrified K-65 silo material to the NTS, and 546 truck shipments for the vitrified Silo 3 material to the NTS. The total cost for transportation and disposition of the material under this approach is estimated to be $121.7 million.

As stated previously, the Foster-Wheeler optimization study results were based on shipping vitrified radioactive material in full compliance with regulations promulgated prior to September 1995. Under these regulations the vitrified material generated from remediation of OU4 silo material can not be classified as low specific activity (LSA) material due to the concentrations of radium-226 in the K-65 material, and thorium-230 in the Silo 3 material. Therefore, the quantity of material that could be placed into one package was limited to the allowable Curie content, for the mixture of radionuclides present, established by the DOT regulatons.

However, regulations proposed by the DOT in November 1989 (54 FR 47454) further clarify the definition of LSA material which would encompass OU4 vitrified material. These regulations were recently promulgated on September 28, 1995 (60 FR 50292). OU4 vitrified material would be classified as LSA-II material under the new regulations because the average specific activity for the radionuclides present in the vitrified material would not exceed 10^{-4} A_2/g. Classification as LSA-II would allow the vitrified material to be placed directly into containers that met Industrial Package-Type 2 specifications under the new rules. Using a maximum payload limit of 42,000 pounds and a radiation level limit of 100 millirem per hour (mrem/h) on contact for handling operations at the NTS, approximately 3,200 containers would be required for shipment, resulting in approximately 1,600 shipments of vitrified OU4 material to the NTS. The total cost for transportation and disposition of OU4 silo material under this scenario is estimated at $36.1 million.

This report summarizes the rationale used in the determination of these configurations, and recommends and describes a path forward based on findings and the results of this study. Key issues discussed in the report that impact the proposed path forward are:

- Cost-effectiveness of using the optimized packaging configuration as determined in the study conducted by Foster-Wheeler.
- Acceptance of the classification of OU4 silo material as LSA-II material under the new regulations by the DOE Ohio Field Office (DOE-OFO).
- Risks associated with transporting the non-dispersible treated material by truck.
- NTS approval of the OU4 11(e)(2) byproduct material as "small volume" in accordance with DOE Order 5820.2A, Chapter IV.

- Compliance with the CERCLA "Offsite Rule" for disposal at the NTS.

- Design of a new container, or modification of an existing container design to meet Type A container specifications (exceeding Industrial Package-Type 2 container requirements) to provide necessary protection of human health and the environment and still be cost-effective.

- Development, certification, and procurement of a prototype container under an existing DOE Program Research Development Announcement (PRDA) contract.

2.0 CONTAINER OPTIMIZATION STUDY

To determine the optimum transport configuration, FERMCO tasked Foster-Wheeler to perform a container optimization study for the transportation of vitrified K-65 and Silo 3 material. Key issues affecting the optimum transport configuration are:

- Proper classification of vitrified material under recently promulgated DOT regulations (60 FR 50292),
- Maximum quantity of radioactive material permitted in an individual container,
- DOT radiation level limitations on the external surface of a package and the transport vehicle,
- Comparison between transporting by a combination of rail and truck and transporting by truck only,
- Short term risks associated with transporting the treated material to the NTS, and
- NEPA Supplemental Analysis for the "truck-only" transport mode.

2.1 PROPER CLASSIFICATION OF OU4 VITRIFIED MATERIAL

The K-65 silos contain residues generated from processing high grade uranium ores. Silo 3 contains residues, known as cold metal oxides, generated from extraction of uranium from uranium ores and uranium concentrates. Both K-65 and Silo 3 materials are by-product materials as defined under Section 11(e)(2) "wastes produced by the extraction or concentration of uranium or thorium from any ore processed primarily for its source material content" of the Atomic Energy Act of 1954. To determine the packaging requirements for the material, proper classification of the material had to be performed in accordance with pertinent DOT regulations.

2.1.1 Low Specific Activity Material

Foster-Wheeler staff were tasked to evaluate the optimum transportation and packaging configuration for vitrified radioactive material in accordance with current DOT regulations promulgated in 49 CFR § 173 Subpart I. Based on their findings, the OU4 vitrified material was determined not to be low specific activity (LSA) material under the current definition presented in 49 CFR § 173.403(n).

Through direct discussions with and guidance provided by the DOT and detailed evaluation of proposed regulations related to the safe transport of radioactive material presented in 54 FR 47454, it was determined that OU4 vitrified material could meet one of the criterion for LSA material under the proposed definition. These regulations were recently promulgated on September 28, 1995 (60 FR 50292). The following section reviews and discusses each of the different criterion which delineates LSA material under the recently promulgated regulations for a determination on whether OU4 material meets the definition of LSA material.

2.1.1.1 LSA Criteria 49 CFR § 173.403 (60 FR 50292)

The proposed regulations define LSA as material that satisfies the descriptions and limits set forth in one of three groups; LSA-I, LSA-II, and LSA-III.

LSA-I Evaluation

LSA-I must satisfy any of the following:

> "i) Ores containing only naturally occurring radionuclides (e.g., uranium, thorium) and uranium or thorium concentrates of such ores; or
>
> ii) Solid unirradiated natural or depleted uranium or natural thorium or their solid or liquid compounds or mixtures; or
>
> iii) Radioactive material, other than fissile material, for which the A_2 value is unlimited; or
>
> iv) Mill tailings, contaminated earth, concrete, rubble, other debris, and activated material in which the radioactive material is uniformly distributed and the estimated average specific activity does not exceed 10^{-6} A_2/g."

The first criterion for LSA-I material applies to actual ores or the products of the physical and chemical concentration process (e.g., yellowcake). By process knowledge, the material in the OU4 silos is the waste residue from this process and not the actual ores nor the product from processing the ores. Therefore, the OU4 silo material does not meet this criterion.

The second criterion applies to nuclear fuel rods or elements containing uranium and thorium. The OU4 silo material does not contain nuclear fuel rods or elements, therefore, the silo material does not meet this criterion.

In addition, the OU4 silo material does not have an unlimited A_2 value and its estimated average specific activity exceeds the 10^{-6} A_2/g criterion. As a result, the OU4 silo material does not meet the criteria established for LSA-I.

LSA-II Evaluation

LSA-II material can be

> "i) Water with a tritium concentration up to 20 Ci/L; or
>
> ii) Other material in which the radioactive material is distributed throughout and the estimated average specific activity does not exceed 10^{-4} A_2/g for solids and gases, and 10^{-5} A_2/g for liquids."

The OU4 silo material is not aqueous and does not contain tritium. Therefore, silo material does not meet the first criterion for LSA-II.

Evaluation of the radionuclide content for both K-65 and Silo 3 materials indicates OU4 silo material meets the second criterion for LSA-II material. Therefore, OU4 silo material could be

classified as LSA-II material under the new regulations. The results of this LSA determination on K-65 and Silo 3 material are presented in Tables A-1 and A-2, respectively of Appendix A.

LSA-III Evaluation -- 8064

LSA-III is defined as "Solids in which:

i) The radioactive material is distributed throughout a solid or a collection of solid objects, or is essentially uniformly distributed in a solid compact binding agent (such as concrete, bitumen, ceramic, etc,);

ii) The radioactive material is relatively insoluble, or it is intrinsically contained in a relatively insoluble material, so that, even under loss of packaging, the loss of radioactive material per package by leaching when placed in water for seven days as determined by the tests prescribed in § 173.468 would not exceed 0.1 A_2; and

iii) The estimated average specific activity of the solid does not exceed $2x10^{-3}$ A_2/g."

Though no size limitations are specified in the LSA-III criteria, the DOT has commented that the criteria is intended to apply to large objects such as concrete and bitumen. The intent of this criteria was not envisioned for vitrified gems produced during remediation of the OU4 silo material. Therefore, vitrified OU4 silo material would not likely meet the intent of the LSA-III criteria, and as a result classification under this criteria will not be pursued.

Based on the information presented above, the OU4 silo material does meet the second criteria for LSA-II material under regulations proposed in November 1989 and recently promulgated in September 1995. Documented discussions with DOT representatives verified this determination.

2.1.2 Fissile-Exempt Material

Similar to the approach used for determining whether OU4 vitrified material met the criteria for LSA material, an evaluation was performed to determine whether OU4 vitrified material should be classified as fissile material or fissile-exempt material under the recently promulgated regulations.

2.1.2.1 Fissile-Exempt Criteria 49 CFR § 173.453 (60 FR 50292)

The definition for fissile material under the new regulations does not exclude OU4 silo material. The new definition excludes "Unirradiated natural uranium and depleted uranium and natural or depleted uranium which has been irradiated in thermal reactors." As stated previously in Section 2.1.1.1 of this document, OU4 silo material does not meet the definition of unirradiated uranium or unirradiated thorium. Therefore, this exclusion does not apply to the OU4 silo material.

Since, silo material contains uranium-235, a fissile radionuclide, the exceptions under 49 CFR § 173.453 must be evaluated to determine if vitrified silo material needs to be classified as fissile. To be considered "fissile exempt," only one of the criteria listed in the exceptions under 49 CFR § 173.453 must be met.

49 CFR § 173.453 states "the requirements of § 173.451 through 173.459 do not apply to:

(a) A package containing not more than 15 grams of fissile radionuclides. If the material is transported in bulk, the quantity limitation applies to the conveyance;

The proposed customized container, discussed in Section 3.6, will have a payload of approximately 9,000 pounds (4.10E+06 grams). The activity of uranium-235 per unit mass of K-65 vitrified material is approximately 1.11E-10 Ci/g. If the container is filled to capacity, approximately 4.55E-04 Ci of uranium-235 would be in each package. The specific activity of uranium-235 is 2.20E-06 Ci/g as presented in the table under 49 CFR § 173.435. As a result, approximately 207 grams of uranium-235 will be in each customized container (4.55E-04 Ci x 1 g/2.20E-06 Ci). This value exceeds the acceptable 15 gram limit, therefore, this fissile material exception criteria can not be applied to the K-65 vitrified material.

The same logic can be applied to uranium-235 in the Silo 3 material. The activity of uranium-235 per unit mass of Silo 3 vitrified material is approximately 1.38E-10 Ci/g resulting in 5.66E-04 Ci per package. This results in approximately 257 grams of uranium-235 (5.66E-04 Ci x 1 g/2.20E-06 Ci) in each customized concrete container. This value exceeds the acceptable 15 gram limit, therefore, this fissile material exception can not be applied to the Silo 3 vitrified material.

(b) A package containing homogenous solutions or mixtures where;

(1) The minimum ratio of the number of hydrogen atoms to the number of atoms of fissile radionuclides (H/X) is 5200;

(2) The maximum concentration of fissile radionuclides is 5 grams per liter; and

(3) The maximum mass of fissile radionuclides in the package is 500 grams, except that for a mixture in which the total mass of plutonium and uranium-233 does not exceed 1% of the mass of uranium-235, the limit is 800 grams. If the material is transported in bulk, the quantity limitations apply to the conveyance;

This criteria does not apply to the OU4 silo material since the majority of hydrogen will be volatilized during the vitrification process.

(c) A package containing uranium enriched in uranium-235 to a maximum of 1% by mass, and with a total plutonium and uranium-233 content of up to 1% of the mass of uranium-235, if the fissile radionuclides are distributed homogeneously throughout the package contents, and do not form a lattice arrangement within the package;

This criterion is intended to preclude latticing of slightly enriched uranium in a moderating medium. The OU4 silo material does not consist of enriched uranium in a moderating medium, therefore, this criterion does not apply to the OU4 silo material.

(d) A package containing not more than 5 grams of fissile radionuclides in any 10-liter volume, provided that the material is contained in packages that will maintain the limitation on fissile radionuclide distribution during normal conditions of transport;

The OU4 silo material <u>will meet</u> this exception criterion. Using the values presented above

for (a), it is estimated that a customized container with a full payload of K-65 vitrified material would consist of 207 grams of uranium-235, and a customized container with a full payload of Silo 3 vitrified material would consist of approximately 257 grams of uranium-235. As discussed in Section 3.6, the volume capacity of the customized concrete container is approximately 61 ft^3 (1717 liters). As a result, the concentration of uranium-235 from K-65 vitrified material would be 0.12 g/L and the concentration of uranium-235 from Silo 3 vitrified material would be 0.15 g/L in a customized concrete container. Since the uranium-235 concentration is less than 5 grams per 10 liters (0.5 g/L) in both cases, this criterion can be used to classify OU4 silo material as fissile exempt.

(e) A package containing one kilogram or less of plutonium of which 20% or less by mass may consist of plutonium-239, plutonium-241, or any combination of those radionuclides;

This exception applies to shipments of plutonium. The OU4 silo material does not contain any plutonium, therefore, this exception does not apply to the OU4 silo material.

(f) A package containing liquid solutions of uranyl nitrate enriched in uranium-235 to a maximum of 2% by mass, with total plutonium and uranium-233 not exceeding 0.1% of the mass of uranium-235 with a nitrogen-to-uranium atomic ratio (N/U) of 2.

The material in the OU4 silos does not consist of liquid solutions of uranyl nitrate, therefore, this exception does not apply to the OU4 silo material.

Under the new regulations in 60 FR 50292, the only criterion that applies to OU4 material is criterion 49 CFR § 173.453(d). This criterion is met by both K-65 and Silo 3 material. Therefore, OU4 silo material is fissile exempt and does not have to be shipped in accordance with the fissile material shipping regulations under DOT.

2.2 DOT QUANTITY LIMITATIONS PER PACKAGE

The amount of radioactive material permitted in a single package is dependent upon proper classification of the material, the radionuclides present in the material, and the curie content of the radionuclides. Under the new DOT regulations, the quantity of LSA material permitted in a single package is limited so "that the external radiation level at 3 m from the unshielded material or object or collections of objects does not exceed 1 rem/h."

In addition, limits have also been placed on the amount of some types of LSA material permitted in a single conveyance. For LSA-II material that is also a non-flammable solid, there is no proposed quantity limit for a single conveyance.

If the vitrified OU4 material is determined not to be LSA-II, it will be classified as normal form radioactive material. Normal form radioactive material placed in a Type A package must not have a quantity of radioactivity greater than the established A_2 value for a single radionuclide or the calculated A_2 value for a mixture of radionuclides. DOT A_2 quantity limits for specific radionuclides in normal form radioactive material are presented in 49 CFR § 173.435. DOT A_2 quantity limits for radioactive decay chains and radioactive mixtures are determined in accordance with 49 CFR § 173.433. In particular, 49 CFR § 173.433(b)(3) describes the "sum of fractions" method for calculating A_2 quantity limits for radioactive mixtures.

Under the "sum of fractions" methodology, a ratio of the total activity of the radionuclide to its respective A_2 value is calculated, and the sum of these ratios, or fractions, is obtained to determine the A_2 quantity limit. For Type A packages the A_2 quantity limit is reached when the sum of fractions equals one.

2.2.1 Packaging Based on LSA-II Requirements

Under the new DOT regulations, OU4 vitrified material is classified as LSA-II material. As stated previously, the new regulations coincide with the IAEA regulations and restrict the quantity of LSA material in a single package so that the external radiation level at 3 m from the unshielded material does not exceed 1 rem/h. In addition, a limit per conveyance has not been established for non-flammable solid LSA-II material.

The radiation level associated with the unshielded K-65 material maximizes at approximately 900 mrem/h on contact while that for Silo 3 material maximizes at approximately 10 mrem/h at contact. These levels would decrease over 3 meters so that OU4 vitrified material would meet the LSA dose requirements with any size packaging.

The proposed regulations require as a minimum, an industrial package-type 2 (IP-2) container be used for shipments of LSA-II material. IP-2 containers must meet the general design requirements established in 49 CFR § 173.410 of the proposed regulations. In addition, the proposed regulations require IP-2 containers undergo the free drop test [49 CFR § 173.465(c)] and the stacking test [49 CFR § 173.465(d)] without loss or dispersal of the radioactive contents and without a significant increase in the radiation levels recorded or calculated at the external surface of the container prior to the tests. As discussed in Section 3.6, the proposed customized container to ship the OU4 vitrified material will meet or exceed these requirements.

The quantity of material that will be placed in a single container will be limited by the rated capacity of the container, while the quantity placed on each truck will be limited to an amount that maintains each shipment within legal weight limits. A customized container being proposed for OU4 vitrified material would have an internal volume capacity of 61 ft^3 and payload limit of 9,000 pounds. The volume of vitrified material to be generated during remediation of OU4 silo material is estimated at 2.86E+07 pounds. Based on a payload of 9,000 pounds per container, approximately 3,200 customized containers would be required. If two containers are transported per shipment, approximately 1,600 shipments would be required to transport the vitrified material to the NTS for disposal.

2.2.2 Packaging Based on Normal Form Radioactive Material Requirements

If it is determined that OU4 silo material does not meet one of the definitions of LSA material, the material would have to be classified as normal form radioactive material. Therefore, the radioactivity present in a single package must not exceed the calculated A_2 value for the mixture of radionuclides present in the material.

The K-65 and Silo 3 material consists of a mixture of radionuclides from three different radioactive decay chains. For purposes of determining the A_2 quantity limits for the OU4 vitrified material, the DOE proposed to divide the decay chains into segments in which the radionuclides are present in their naturally occurring proportions. Each segment is headed by a radionuclide with a half-life of ten days or longer, with all progeny in each segment, by

virtue of equilibrium proportions, considered as the single (parent) radionuclide.[2] — 8064

Spreadsheets for determining the quantity limitations of K-65 and Silo 3 vitrified gem material are presented in Appendix B. Based on calculations using the A_2 values under the new regulations, a Type A 3-gallon container would maximize 100 percent of its volume and contain 67 percent of the maximum A_2 quantity for vitrified K-65 material and 100 percent of the A_2 quantity for vitrified Silo 3 material. Using this information, the study showed for vitrified K-65 material approximately 168 3-gallon containers could be overpacked in a durable concrete vault. However, weight restrictions for over the road vehicles would limit this to 114 3-gallon containers being placed in a concrete vault. An example of the durable concrete vault considered for overpacking the K-65 vitrified material is the SQ-112 Squarepak™, developed by Scientific Ecology Group, Inc. A maximum of two SQ-112™ overpacks could be placed in a closed transport vehicle and shipped by exclusive use to the NTS for disposal.

Based on calculations performed by Foster-Wheeler (See Appendix B), approximately 47 pounds of vitrified material could be placed into a 3-gallon container. This results in approximately 5,358 pounds of vitrified K-65 material per SQ-112™ overpack, and approximately 10,716 pounds of K-65 material per shipment. As a result, approximately 596,390 3-gallon containers, 5,232 SQ-112™ overpacks, and 2,616 truck shipments would be required to transport all the vitrified K-65 material to the NTS.

Similar calculations were performed for vitrified Silo 3 material. However, a B-25 overpack was used in place of the SQ-112™ overpack, because of the lower dose rates associated with Silo 3 residues and the subsequent need for less shielding. Approximately 120 3-gallon containers could be placed inside a B-25 overpack. Due to weight restrictions for over the road vehicles, a maximum of five B-25 overpacks could be placed in a closed transport vehicle and shipped by exclusive use to the NTS for disposal.

Based on calculations, approximately 47 pounds of vitrified Silo 3 material could be placed into a 3-gallon container. This results in approximately 5,604 pounds of material per B-25 overpack, and approximately 28,020 pounds of material per shipment. As a result, approximately 327,288 3-gallon containers, 2,731 B-25 overpacks, and 546 truck shipments would be required to transport all the vitrified Silo 3 material to the NTS.

An estimated total of 923,678 3-gallon containers, 5,232 SQ-112™ containers, 2,731 B-25 metal boxes would be required to package OU4 vitrified material under this scenario. This would result in an estimated 3,162 shipments of OU4 vitrified material to the NTS.

2.3 COMPLIANCE WITH DOT RADIATION LEVEL LIMITATIONS

DOT has established a radiation level limit of 200 millirem per hour (mrem/h) for the external

[2] As provided by the regulations, a single radioactive decay chain in which radionuclides are present in their naturally occurring proportions and in which no daughter nuclide has a half-life either longer than 10 days or longer than that of the parent nuclide shall be considered as a single radionuclide, and the activity to be taken into account and the A_2 value to be applied shall correspond to the parent nuclide of that chain [49 CFR § 173.433(b)(2)].

surface of a package and a transport index limit[3] of 10 for each package of radioactive material offered for transportation [49 CFR § 173.441(a)]. Packages exceeding either of these radiation level limits must be shipped as exclusive use with the following radiation level limitations:

-- 8064

- 200 mrem/h on the external surface of the package,
- 200 mrem/h at any point on the outer surfaces of the transport vehicle, including the top and underside of the vehicle,
- 10 mrem/h at any point two meters from the outer lateral surface of the transport vehicle, excluding the top and underside of the vehicle, and
- 2 mrem/h in any normally occupied space, except where private carriers operate under a State or federally regulated radiation protection program and the personnel wear radiation dosimetry devices.

The external surface of a package may have a radiation level limit greater than 200 mrem/h but less than 1000 mrem/h when shipped by exclusive use, if:

1) the shipment is made in a closed transport vehicle,

2) the package is secured during transport to prevent shifting during transport, and

3) no loading or unloading operations occur between the beginning and end of the transportation [49 CFR § 173.441(b)(1)-(4)].

Based on Microshield 4® modeling data reported by Foster-Wheeler, the estimated radiation level on the external surface of a 3-gallon package containing vitrified K-65 material would be approximately 364 mrem/h. Applying the DOT radiation level limits to this package, results in the need to transport K-65 material by exclusive use in a closed transport vehicle. In order to consolidate the number of packages to be transported into manageable shipments and to offer more radiation shielding, the vitrified K-65 material would be overpacked in a durable container similar to that identified in Appendix C.

Based upon modeling, the overpack would reduce the external surface radiation level from the 364 mrem/h, for the 3-gallon container, to approximately 100 mrem/h. In addition, the overpacks provide the necessary shielding to meet the radiation level limitations established for the transport vehicle (i.e., 200 mrem/h on external surface of transport vehicle, and 10 mrem/h two meters from the outer lateral surface of the transport vehicle).

In comparison, 3-gallon containers overpacked in a stainless steel or carbon steel container with a typical thickness of 0.25 inches resulted in an external radiation level on the surface

---

[3] Transport index means the dimensionless number placed on the label of a package to designate the degree of control to be exercised by the carrier during transportation. For OU4 vitrified material, the transport index is determined by the number expressing the maximum radiation level in mrem/hr at one meter from the external surface of the package [49 CFR § 173.403(bb)(1)].

of the overpack of approximately 515 mrem/h. Furthermore, the option of placing 3-gallon containers directly into a Sea/Land cargo type container resulted in a external radiation level on the surface of the Sea/Land container of approximately 710 mrem/h. To provide the same shielding capabilities as a concrete vault, the stainless steel overpack would require a wall thickness of 1.5 inches. As a result, further analysis of an optimum container for vitrified K-65 material concentrated on containers constructed of concrete.

Based on modeling, the external surface radiation level for the customized container proposed for OU4 vitrified material classified as LSA-II would be approximately 75 mrem/h for K-65 vitrified material and less than 10 mrem/h for Silo 3 material. The customized container is proposed to be a modified version of the container identified in Appendix C.

The NTS has requested that external surface radiation levels be below 100 mrem/h so that the containers with their waste content do not have to be disposed in a "high radiation area". The DOE, under 10 CFR 835, has established that areas in which radiation levels could result in an individual receiving a deep dose equivalent in excess of 100 mrem/h at 30 cm from the radiation source must be classified as a high radiation area. The customized container will meet the NTS request by ensuring the surface radiation levels associated with the container are maintained below 100 mrem/h.

2.4 INTERMODAL AND DIRECT TRUCK SHIPMENT COMPARISON

Because of the need to transfer from rail to truck in Las Vegas, as well as the need to obtain Sea/Land cargo containers to overpack the customized containers for shipment by rail, shipments by truck-only would result in the more cost-effective alternative for the customized container (approximately $38.3 million for intermodal versus $36.1 million for truck-only). In addition, rail would not be the most efficient and safe method to transport the vitrified waste.

During the course of the study, it was determined that the rail carrier requires individual packages such as B-25s and SQ-112 Squarepaks™ be placed in cargo or Sea/Land containers prior to shipment on a rail car. This is required to reduce exposure to rail workers by reducing the number of packages they need to handle. Many of these containers will be required to meet the project transportation needs for OU4 vitrified material. A large storage area for these containers would have to be designated when the containers are not being used. The capital, operation and maintenance of a storage area was not included in the cost-study performed by Foster-Wheeler.

The cargo or Sea/Land containers would have to be returned by the rail carrier for re-use at Fernald. Vitrified waste would need to be stored at the Fernald while waiting for cargo containers to be returned. This would result in increased risks of worker exposure, as well as increased costs due to return rail shipments to Fernald and development of adequate storage space at Fernald.

Though the NTS is in the process of preparing an Environmental Impact Statement (EIS) to evaluate potential environmental impacts associated with future-use alternatives for the NTS, no decision is expected regarding rail access to the NTS. In addition, DOE-NV recognizes a rail option would be a more feasible alternative should the NTS be selected as the sole low level radioactive waste disposal site for the DOE complex. However, a decision on that selection is being deferred to the Waste Management Programmatic EIS. Furthermore, should Yucca Mountain build a rail spur into the test site, DOE-NV would perform additional

evaluations associated with utilization of the spur for DOE low level radioactive waste generators.

8064

Currently rail access is available from the Fernald site to Las Vegas, Nevada, but is not available all the way to the NTS. Since there are no rail lines or spurs to the NTS, additional costs would be incurred for container transfers from rail to local trucks to complete the intermodal shipment to the NTS. Furthermore, additional handling of a waste container increases the probability of accidents, such as breaching containers, and thus increases the risks.

Logistically, it is easier to load a truck and stabilize the containers prior to shipment than it would be to load and stage a rail car. Shipments by rail would require that individual packages be placed into toploading cargo or Sea/Land containers, stabilized, then rigged, lifted, and secured in place on a rail car.

A train engine and rail car(s) would need to be dedicated to specifically meet the production schedule for the project. The round trip, by train, to Las Vegas is estimated at 29 days from Fernald. Thus, vitrified material would need to be stored at Fernald resulting in increased materials handling and increased risk of worker exposure. This cost factor was not included in the Foster-Wheeler report.

As stated previously, intermodal costs in the Foster-Wheeler report do not include those costs associated with increased handling and storage requirements. In addition, truck only shipments offer a greater degree of control than rail shipments, because DOE would be the sole consignor of the truck shipment while other consignors would be using the train, unless an engine dedicated to the OU4 remediation effort were purchased. Furthermore, truck only shipments would allow direct control and transport to the NTS without the need for transfer, as would be required by rail shipments, where some control of shipments would have to be relinquished. Based on these considerations concerning intermodal transport, the truck-only transport option is more favorable.

2.5 TRANSPORTATION RISK ASSESSMENT

To assess the impacts to transportation ground and vehicle crews, as well as the public, from normal and off-normal events during the transportation of vitrified K-65 and Silo 3 material from Fernald to the NTS, unit calculations of dose based on the RADTRAN 4® computer code were performed. RADTRAN 4®, the risk assessment model, estimates the radiological impacts to the transportation workers and the population living along or sharing the transportation route. The code assesses incident-free impacts to the population and workers, as well as impacts to the population from a release of radioactive material following a vehicle accident. The impacts are expressed in terms of dose equivalent, in units of person-rem, which is the amount of radioactive exposure to all receptors.

Factors can be applied to the RADTRAN® results to convert to Lifetime Cancer Risk (LCR) values, or the risk of cancer resulting from a specified dose of ionizing radiation resulting from the transportation of vitrified material from Fernald to the NTS. The calculated LCR would incorporate both cancer deaths and fatal genetic effects from exposures. The conversion factor of 6.30E-04 excess cancers/person-rem was used to convert receptor doses to the LCR and was obtained from Health Effects of Exposure to Low Levels of Ionizing Radiation (1990), by the Committee on the Biological Effects of Ionizing Radiation. However, it must be

emphasized that the application of a LCR conversion factor is not exact because the etiology of a radiation-induced cancer is complex and not completely understood.

-- 8064

The RADTRAN® modeling results are presented in Table 2-1. The table presents risk data associated with transporting the vitrified material as normal form radioactive material and LSA-II material, and transporting the material by both truck only and by combination rail/truck. Packaging configurations evaluated in the model were vitrified K-65 material packaged in 3-gallon containers overpacked in a SQ-112 Squarepak™ or equivalent, vitrified Silo 3 material packaged in 3-gallon containers overpacked in Metal B-25s, and both K-65 and Silo 3 vitrified material packaged in customized concrete reinforced steel containers certified as Type A containers under the proposed regulations.

Results indicate that risk associated with transporting material by intermodal (rail/truck) or truck-only is comparable. In addition, the results indicate that risk associated with transporting material as normal form radioactive material or as LSA-II material also are comparable. Although the risk associated with transporting the material by truck is slightly higher than the risk associated with transporting the material by a combination rail/truck, the LCR for the maximally exposed individual for both transportation options is well within the acceptance criteria under CERCLA.

Therefore, classifying the vitrified material as LSA-II material under the new regulations, packaging the material in customized concrete reinforced steel Type A containers, and transporting the material by truck would not present an unacceptable risk.

2.6 NEPA SUPPLEMENTAL ANALYSIS

The Selected Remedy presented in the integrated OU4 CERCLA/NEPA ROD included vitrification of the silo contents with final disposition of the vitrified material occurring at the NTS. The ROD stated vitrified waste would be transported off-site to the NTS by either intermodal (rail/truck) shipments or by truck-only shipments. Based on information provided in this report, truck-only shipments were identified as the preferred mode of transport. The OU4 FS/PP-EIS only evaluated intermodal shipments in detail. Due to the potential changes in the accident rates and exposure risk levels to the public resulting from the change in transportation modes (i.e., intermodal to truck only), a Supplemental Analysis is required to evaluate and present risk impacts associated with truck-only shipments to maintain compliance with NEPA and ensure protectiveness of human health and the environment.

The NEPA Supplemental Analysis was conducted by DOE in accordance with 10 CFR § 1021, "National Environmental Policy Act, Implementing Procedures and Guidelines" to determine whether a Supplemental EIS should be prepared in response to the change in transportation modes. The Supplemental Analysis is being integrated with this report.

Based on preliminary data as shown in Table 2-1, regardless of whether the waste is transported by truck to the NTS as normal form radioactive material in overpacked 3-gallon containers or as LSA-II material in a customized Type A container, the changes in risk levels appear to be minimal and well within the acceptable risk range as defined by CERCLA. Furthermore, the accident rate results, presented in Table 2-2, indicate that accident rates would decrease for the truck-only transport scenario in comparison to the intermodal (rail/truck) transport scenario. This is due to the rail route being longer than the direct truck route and due to the return shipments of Sea/Land cargo containers to Fernald under the

Table 2-1. Comparison of Impacts to Receptors During Off-Property Waste Transportation for Proposed Packaging Options

	Transportation Scenario	Train/Intermodal Truck[1] Routine Transport Maximally Exposed Individual[2]	Train/Intermodal Truck[1] Accident Accident-All Receptors[3]	Truck-Only Routine Transport Maximally Exposed Individuals[2]	Truck-Only Accident Accident-All Receptors[3]
PACKAGING OPTION #1[3]	OU4 FS/PP-EIS K-65 Vitrified Monoliths packaged within DOT specification 7A-Type A containers(3A.1/Vit)[6]	8.32E-10	3.30E-09	NE[8]	NE[8]
	OU4 FS/PP-EIS Silo 3 Vitrified Monoliths packaged within DOT specification 7A-Type A containers(3B.1/Vit)[6]	1.71E-11	6.72E-10	NE[8]	NE[8]
	Number of Shipments (FEMP to NTS)	15 Rail/738 Truck		738 Truck	
PACKAGING OPTION #2[4]	K-65 Vitrified Gems packaged within 3-Gallon Containers, Overpacked in durable concrete vaults[7]	9.95E-08	3.29E-09	2.24E-07	1.50E-09
	Silo 3 Vitrified Gems packaged within 3-Gallon Containers, Overpacked in B-25 Metal boxes[7]	5.10E-09	4.95E-10	3.82E-09	2.26E-10
	Number of Shipments (FEMP to NTS)	1,350 Rail/3,162 Truck		3,162 Truck	
PACKAGING OPTION #3[5]	K-65 Vitrified Gems packaged within customized concrete vaults[7]	7.37E-08	2.17E-09	1.42E-07	9.89E-10
	Silo 3 Vitrified Gems packaged within customized concrete vaults[7]	2.85E-09	3.96E-10	3.45E-09	1.82E-10
	Number of Shipments (FEMP to NTS)	640 Rail/1,600 Truck		1,600 Truck	

1 = Intermodal transport consists of rail shipments from FEMP to Las Vegas, with transfer to truck for shipment by truck from Las Vegas to the NTS.
2 = Risk numbers represent the increased probability of an individual developing a cancer due to exposure to the transported material.
3 = Packaging Option #1 involves packaging vitrified monoliths into DOT specification 7A-Type A containers. Rail shipments involve using unit train of ten rail cars with 25 packages per car. Each truck is loaded with 5 packages.
4 = Packaging Option #2 involves packaging vitrified gems into 3-gallon DOT Type A containers. K-65 vitrified gems would be overpacked in strong/durable concrete vaults. Silo 3 vitrified gems would be overpacked in B-25 metal boxes. Rail shipments would consist of 3 railcars per shipment, each railcar loaded with 5 concrete vaults or nine B-25 metal boxes. Trucks would be loaded with 2 concrete vaults or 5 B-25 metal boxes.
5 = Packaging Option #3 involves packaging vitrified gems into strong/durable customized concrete vaults that meet DOT Type A packaging requirements. Rail shipments consist of 3 railcars per shipment, each rail car loaded with 5 concrete vaults. Each truck would be loaded with 2 concrete vaults.
6 = The OU4 Feasibility Study used an older risk conversion factor, from ICRP-26, of 1.26E-04 Lifetime Cancer Risk/person-rem.
7 = Packaging Options #2 and 3 used a risk conversion factor of 6.3E-04 Lifetime Cancer Risk/person-rem from the Committee on the Biological Effects of Ionizing Radiation-V (1990).
8 = NE - Not Evaluated. Truck only transport option not examined in OU4 FS/PP-EIS.

000023

8064

Table 2-2. Comparison of Accident Rates for Intermodal Train/Truck and Truck-Only Transport

Transportation Scenario	Train/Truck Intermodal[1] Accident Rates				Truck-Only Accident Rates			
	Occupational Fatalities[2]	Occupational Injuries[2]	Public Fatalities[2]	Public Injuries[2]	Occupational Fatalities[2]	Occupational Injuries[2]	Public Fatalities[2]	Public Injuries[2]
OU4 FS/PP-EIS K-65 Vitrified Monoliths packed in DOT spec 7A-Type A containers (3A.1/Vit)[3]	1.21E-03	1.02E-01	3.94E-02	1.63E-01	NE[5]	NE[5]	NE[5]	NE[5]
OU4 FS/PP-EIS Silo 3 Vitrified Monoliths packed in DOT spec 7A-Type A containers (3B.1/Vit)[3]	6.40E-04	5.43E-02	2.07E-02	8.38E-02	NE[5]	NE[5]	NE[5]	NE[5]
K-65 Vitrified Gems packed in customized concrete vaults[4]	6.57E-02	6.55E+00	2.56E+00	9.69E+00	3.34E-03	6.53E-02	2.07E-02	1.91E-01
Silo 3 Vitrified Gems packed in customized concrete vaults[4]	2.89E-02	2.88E+00	1.13E+00	4.26E+00	1.07E-03	2.09E-02	6.63E-03	6.12E-02

1 = Intermodal transport consists of rail shipments from Fernald to Las Vegas, with transfer to truck for shipment by truck from Las Vegas to the NTS.

2 = Risk numbers represent the estimated number of fatalities and injuries to occupational employees and the public resulting from accidents during transportation of material from Fernald to the NTS. Numbers are based on total miles traveled and total number of shipments.

3 = Transport configuration involves packaging vitrified monoliths into DOT specification 7A-Type A containers. Rail shipments involve using unit train of ten rail cars with 25 packages per car. Each truck is loaded with 5 packages.

4 = Transport configuration involves packaging vitrified gems into strong/durable customized concrete vaults that meet DOT Type A packaging requirements. Rail shipments consist of 3 railcars per shipment, each rail car loaded with 5 concrete vaults. Each truck would be loaded with 2 concrete vaults.

5 = NE - Not Evaluated. Truck only transport option not examined in OU4 FS/PP-EIS.

000024

-- 8064

intermodal transport scenario. Since accident rates are directly proportional to the total distance traveled, longer routes, and return trips to Fernald increase the accident rates associated with intermodal transport.

In addition, some increase in local vehicle traffic would result from the "truck-only" scenario. Any air quality impacts resulting from vehicle emissions due to the increase in local traffic would be minimal.

Based on information provided in this section, it is not anticipated that the preparation of a Supplemental EIS will be required. The final decision on whether to prepare a Supplemental EIS will be made by DOE-HQ after reviewing this document. A record of the final decision as well as this Supplemental Analysis will be made available for stakeholder inspection at the Public Environmental Information Center and will become part of the Administrative Record.

2.7 OPTIMUM TRANSPORTATION CONFIGURATION FOR OPERABLE UNIT 4 MATERIAL

In summary, based on information presented in the Foster-Wheeler report, as well as information obtained since completion of the report, the optimal transport configuration for the OU4 material is vitrified gems classified as LSA-II material, packaged in customized concrete reinforced steel containers that meet Type A design specifications under the new regulations, and transported by exclusive use in a closed transport truck. Shipments would be made in full compliance with the safety requirements established in the new regulations. Therefore, the risk to the public during transportation operations would be minimal.

As stated in Section 2.2.2, approximately 3,200 customized containers would be required to package the vitrified K-65 and Silo 3 gem material. With a maximum of two containers per truck shipment, approximately 1,600 shipments to the NTS would be required. The total costs associated with this scenario are estimated at $36.1 million.

3.0 PATH FORWARD

Transporting vitrified material as normal form radioactive material in Type A 3-gallon containers and overpacked for consolidation would be compliant with current DOT requirements for shipments of radioactive material. However, this packaging configuration would present radiological exposure concerns for on-site workers during packaging operations due to the increased material handling required for the 3-gallon containers. In addition this packaging configuration would not be cost-effective.

As stated in Section 2.1.1.1 of this document, OU4 vitrified material could meet the specifications for LSA-II material established in the new DOT shipping regulations for radioactive material. Vitrified material could be shipped as LSA-II material in full compliance with the new regulations, including requirements established to protect the public. In addition, shipping material as LSA-II material would be more protective of on-site workers and more cost-effective than overpacking 3-gallon Type A containers.

Based on information presented in Section 2.0 and based upon project schedule demands, this Path Forward Summary report recommends DOE-FN seek approval of OU4 silo material as LSA-II material under the new regulations. Key issues impacting this path forward are listed below and are discussed in this section:

- Cost-effectiveness of using the optimized packaging configuration as determined in the study conducted by Foster-Wheeler.
- Acceptance of the classification of OU4 silo material as LSA-II material under the new regulations by the DOE-OFO.
- Risks associated with transporting material by truck.
- NTS approval of the OU4 11(e)(2) byproduct material as "small volume" in accordance with DOE Order 5820.2A, Chapter IV.
- Compliance with the CERCLA "Offsite Rule" for disposal at the NTS.
- Design of a new container, or modification of an existing container design to meet Type A container specifications to provide necessary protection of human health and the environment and still be cost-effective.
- Development and procurement of a prototype container under the DOE PRDA contract.

3.1 COST EFFECTIVENESS OF COMPLIANCE

The shipment of vitrified material to the NTS utilizing 3-gallon containers for the optimized packaging configuration presented in the Foster-Wheeler report would be very expensive, at an estimated cost of $121.7 million. Therefore, it is proposed that the DOE approve OU4 silo material as LSA-II material under the new regulations in 60 FR 50292. This will allow packaging of vitrified material in customized containers with a payload capacity per container of approximately 9,000 pounds. The total number of containers required would be reduced to approximately 3,200. This would enable the DOE to reduce the total number of required

shipments from approximately 3,162 to approximately 1,600. As a result, the total costs associated with transportation and disposal of vitrified material from OU4 would be significantly reduced to approximately $36.1 million.

3.2 APPROVAL OF OU4 SILO MATERIAL AS LSA-II

8064

To ship OU4 vitrified material as LSA-II material, approval must be granted by the DOE-OFO. Therefore, it is recommended that information presented in this document be submitted to the DOE-OFO for their review and written approval.

The determination of the ability for OU4 vitrified material to meet the definition for LSA-II material under the new regulations is presented in Section 2.1.1.1 and Appendix A of this document. According to the data presented in Appendix A, both K-65 and Silo 3 material meet the second criterion established for LSA-II material. It is estimated that the average specific activity for K-65 vitrified material will be one-tenth of the estimated LSA-II limit of 1.15E-05 Ci/g calculated for K-65 vitrified material. In addition, the estimated average specific activity for Silo 3 vitrified material is expected to be less than three-tenths of the estimated LSA-II limit of 7.77E-07 Ci/g calculated for Silo 3 vitrified material.

3.3 RISK ASSOCIATED WITH TRANSPORT OF VITRIFIED MATERIAL

As stated in Section 2.5, the risk associated with shipping the material classified as LSA-II material in customized concrete reinforced steel Type A containers to the NTS is acceptable under CERCLA.

A comparison of the risks associated with transporting the material as LSA-II versus transporting the material as normal form radioactive material in accordance with the A_2 quantity limitations is presented in Table 2-1 as Packaging Option #3. As shown by the data presented in the table, the risk associated with shipping the material as LSA-II would be comparable to the risk associated with shipping the material as normal form radioactive material in accordance with A_2 quantity limitations. The LCR for the maximally exposed individual as a result of shipping vitrified K-65 material as LSA-II material by truck would be approximately 1.42E-07. The LCR for the maximally exposed individual as a result of shipping vitrified Silo 3 material as LSA-II material by truck would be approximately 3.45E-09. These numbers are less than the 10^{-6} criteria established under CERCLA, and as a result present an acceptable risk for transporting the material by truck to NTS under the proposed exemption.

3.4 NTS ACCEPTANCE OF VITRIFIED MATERIAL

The NTS approved 11(e)(2) byproduct material as "small volume" in accordance with DOE Order 5820.2A, Chapter IV, in letter dated January 17, 1995. This letter is presented in Appendix D of this document. By granting approval, the NTS allows Fernald to pursue qualification of the vitrified silo material as an approved waste stream for disposal at the NTS in accordance with the NTS waste acceptance criteria. A proposed schedule for obtaining approval from the NTS for disposal of the OU4 vitrified material is presented in Figure 3.1.

3.5 COMPLIANCE WITH CERCLA "OFFSITE RULE"

The FERMCO Environmental Compliance Division is pursuing the compliance determination for this requirement under the proposal. A strategy for coordination among USEPA Region V and

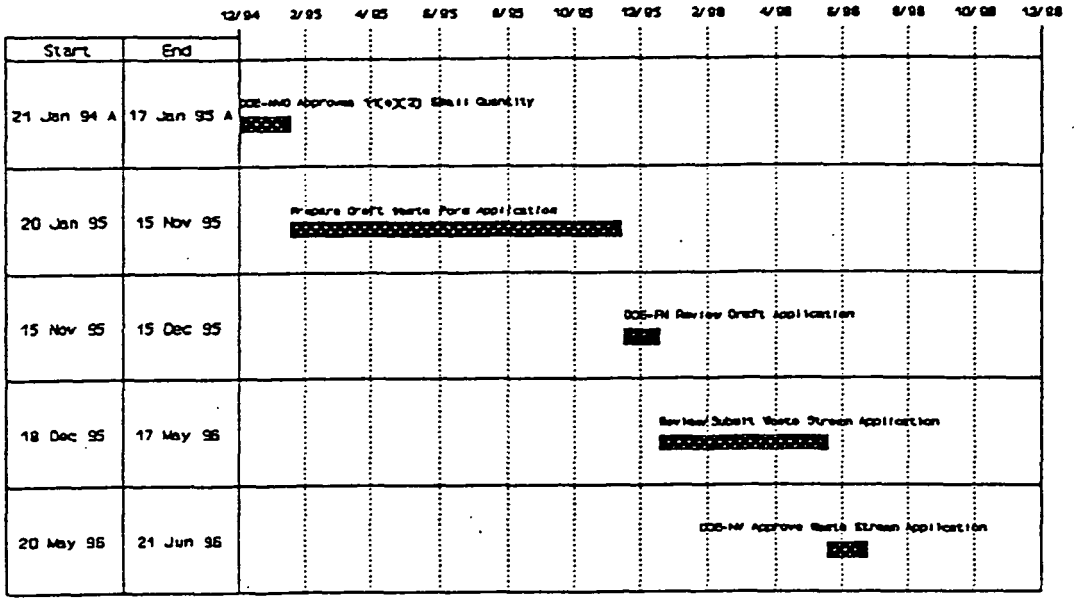

Figure 3.1 Proposed Schedule for Acceptance of Waste at NTS

IX that the NTS meets the criteria is being developed. These activities are being pursued as a Fernald Environmental Compliance issue and are being resolved independent of the OU4 specific activities that are being addressed by this document.

3.6 CUSTOMIZED CONTAINER DESIGN

A proposed customized container for shipping the OU4 material as LSA-II material would be optimized to minimize void space, number of shipments, and radiation levels to those that are as low as reasonably achievable ALARA in order to minimize exposure to workers, the general public and the environment. The customized container would be similar to a hybrid of the Endurok-112™ and the Squarepak-112™ containers manufactured by Scientific Ecology Group, Inc. (SEG). Manufacturer specifications for the existing designs are presented in Appendix C.

The proposed modified design would be constructed of slurry infiltrated fiber reinforced concrete. A sealant will be applied to all interior and exterior surfaces of the container to provide a protective coating as a barrier against moisture and to inhibit deleterious effects of exposure. The internal dimensions would be customized to be approximately 60"(L) X 42"(W) X 42"(H), with an approximate 6-inch thick shielding wall. The resulting volume capacity of the container would be 61 ft^3 with a payload capacity estimated at 9,000 pounds.

If each customized container were filled to capacity, approximately 3,200 containers and 1,600 shipments would be required to transport the vitrified material to the NTS. In addition, the proposed design would offer excellent shielding from the gamma radiation associated with the vitrified material. The estimated radiation level on the external surface of a customized container holding only vitrified K-65 material would be approximately 75 mrem/h, while that for a customized container holding only vitrified Silo 3 material would be negligible. As a result, the proposed customized container would minimize the number of shipments while also reducing radiation levels to those that are ALARA.

-- 8064

Even though the proposed design is intended for use with classification of OU4 vitrified material as LSA-II material, the container would be certified as a Type A package by meeting the test criteria established by DOT in 49 CFR § 173.465. If approved for use in transporting LSA-II material, once the containers are filled to capacity, the radiation level readings will be taken on the external surface of the packages to ensure levels are within design specifications, as well as within DOT requirements established in 49 CFR § 173.441.

In addition, the customized container will be designed to meet the specific waste package criteria established for the NTS. The criteria for waste packages being disposed at the NTS are presented in Section 5.5.1.2, "General Regulatory Waste Package Criteria", and Section 5.5.1.3, "NTS Specific Package Criteria," contained in NVO-325, "Nevada Test Site Defense Waste Acceptance Criteria, Certification, and Transfer Requirements." Because the external dimensions of the customized container do not meet the specifications established by the NTS and the weight of the package will exceed 9,000 lbs, approval for use of the container will have to be obtained from DOE-NV.

3.7 CUSTOMIZED CONTAINER DEVELOPMENT

The customized container discussed in the Section 3.6 will be developed under the DOE Program Research and Development Announcement (PRDA) contract with SEG. This contract is operated through the Martin-Marietta Energy Systems, Inc. under its prime contract with the DOE-Oak Ridge Operations. Under the contract, SEG will develop a container by modifying the existing design of their Endurok-112™ and Squarepak-112™ series containers to make a hybrid container to satisfy the OU4 packaging needs. The hybrid prototype container design will consider the use of recycled low level contaminated material (i.e., concrete and steel) to minimize waste. The container will be fabricated, tested and certified as a DOT Type A container, and be accepted by the DOE-NV for disposal at the NTS. A schedule of the PRDA process for development of the container and testing of the container during Vitrification Pilot Plant Phase II operations is presented in Figure 3.2.

The design and specification of the customized container developed under the PRDA contract will be the basis for the procurement of the containers used for the full-scale remediation facility. It is envisioned that the specifications and drawings would be the focus of a fixed priced, low-bid procurement action to acquire the necessary number of containers to support the remedial action effort.

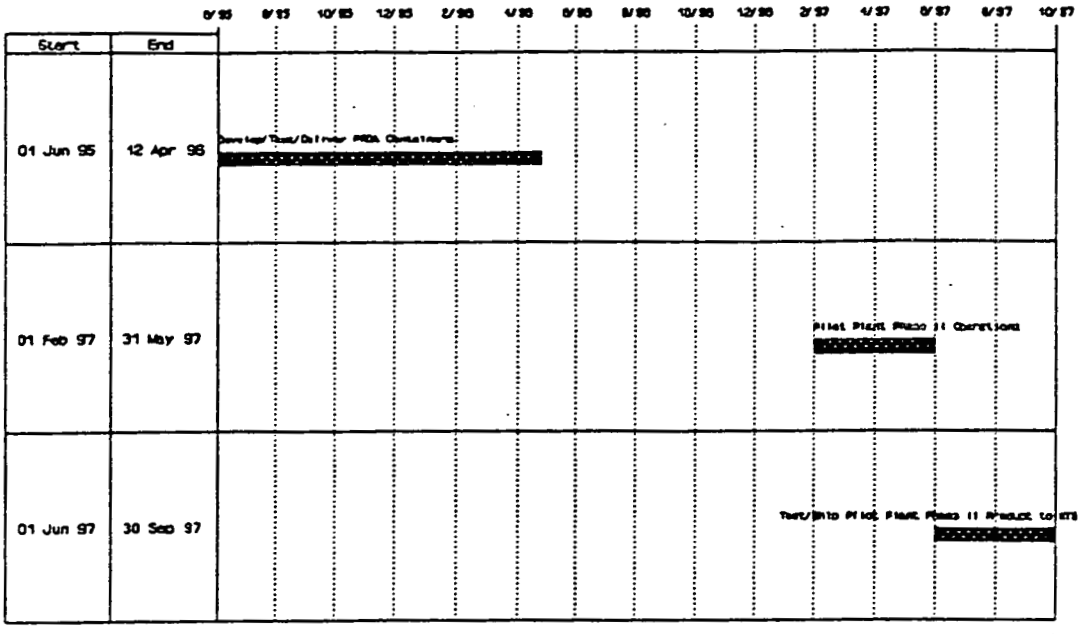

Figure 3.2 Summary Schedule of PRDA Process

4.0 BIBLIOGRAPHY

-- 8064

1. Feasibility Study Report for Operable Unit 4, Fernald Environmental Management Project, Volumes I-IV, U.S. Department of Energy, Fernald Field Office, Fernald, Ohio, February 1994.

2. Health Effects of Exposure to Low Levels of Ionizing Radiation, BEIR V (Committee on the Biological Effects of Ionizing Radiations), National Academy Press, Washington, D.C., 1990.

3. Nevada Test Site Defense Waste Acceptance Criteria, Certification, and Transfer Requirements, U.S. Department of Energy (NVO-325), Nevada Field Office, Las Vegas, Nevada, June 1992.

4. Notice of Correction to the Operable Unit 4, Foster Wheeler Final Report on Container Optimization for Vitrified K-65 and Silo 3 Résidues, Interoffice Memorandum FERMCO # M:CRUP(CRU4/EES):0074, September 20, 1995

4. Proposed Plan for Remedial Actions at Operable Unit 4, Fernald Environmental Management Project, U.S. Department of Energy, Fernald Field Office, Fernald, Ohio, February 1994.

5. Record of Decision for Remedial Actions at Operable Unit 4, Fernald Environmental Management Project, U.S. Department of Energy, Fernald Field Office, Fernald, Ohio, December 1994.

6. Report on Container Optimization for Vitrified K-65 and Silo 3 Residues, Foster Wheeler Environmental Corporation, Fairfield, Ohio, February 1995.

APPENDIX A

LSA-II DETERMINATION FOR VITRIFIED MATERIAL UNDER THE NEW REGULATIONS 60 FR 50292

APPENDIX A

Tables A-1 and A-2 present the source term for the vitrified gem material from the K-65 silos and Silo 3, respectively, as well as the LSA-II classification determination. Columns 2 and 3 present the specific activity for each radionuclide in picocuries/cubic centimeter (pCi/cm^3) and curies per gram (Ci/g), respectively. The specific activities in Column 3 were summed together to provide a total specific activity for the mixture of radionuclides. This value is presented at the bottom of Column 3. Column 4 presents the fractional contribution (f_i) of each radionuclide by dividing the specific activity for each radionuclide by the total specific activity. For K-65 vitrified material the total specific activity is approximately 4.43×10^{-6} Ci/g, while for Silo 3 vitrified material its 2.65×10^{-7} Ci/g.

The A_2 value for the mixture was determined in accordance with § 173.433(d)(2)(ii) of the new regulations:

$$A_2 = 1/(\Sigma_i f_{(i)}/A_{2(i)})$$

where f_i/A_{2i} is the fraction of activity of nuclide "i" in the mixture compared to the radionuclide's respective A_2 value.

Column 5 of the Tables provides the A_2 value for those radionuclides with a half-life greater than 10 days. The three decay chains associated with OU4 material were divided into "sub-chains" in which each parent nuclide had a half-life greater than 10 days. Radionuclides with a half-life less than 10 days were considered to be in secular equilibrium with their parent nuclide so only the A_2 value associated with the parent nuclide was used in determining the A_2 value for the mixture, as allowed under §173.433(c) of the new regulations (60 FR 50292).

Column 6 presents the fraction of activity for each radionuclide compared to the radionuclide's respective A_2 value (Column 4 values divided by Column 5 values). The inverse of the sum of these values equals the A_2 value for the mixture. This calculation is provided at the bottom of Column 6. For K-65 vitrified material the A_2 value is 0.12 Ci, while for Silo 3 vitrified material its 7.77×10^{-3} Ci.

One of the definitions for LSA-II material requires that the specific activity of a material to be less than 10^{-4} times the calculated A_2 value per gram (10^{-4} A_2/g). This value is calculated at the bottom of Column 6 and presented in Column 7. For K-65 material, the LSA-II limit is 1.15×10^{-5} Ci/g, while for Silo 3 material the limit is 7.77×10^{-7} Ci/g.

Column 8 then calculates the fraction of specific activity for each radionuclide compared to the calculated LSA-II limit determined for the mixture (Column 3 values divided by Column 7 values). For a mixture of radionuclides, the sum of the fractions must be less than "1" to be classified as LSA-II material. The sum of the fractions for K-65 material is 0.109 and for Silo 3 material is 0.266 as presented at the bottom of Column 8 in their respective Tables. Therefore, both K-65 and Silo 3 vitrified material qualify as LSA-II material under the proposed regulations.

Table A-1. K-65 Material LSA-II Determination Under the New Regulations (60 FR 50292)

Radionuclide	Source Term (pCi/cm³)	K-65 Gems (Ci/g)	f(i)	A_2 Limit (Ci)	$f(i)/A_2$ (Ci^{-1})	LSA-II Limit 10^{-4} x A_2 (Ci/g)	Fraction of LSA-II Limit
Ac-227	1.99E+04	8.46E-09	1.91E-03	5.41E-04	3.53E+00	1.16E-05	7.29E-04
Ac-228	3.02E+03	1.28E-09	2.89E-04				
Bi-210	6.72E+05	2.86E-07	6.46E-02			8064	
Bi-211	1.99E+04	8.47E-09	1.91E-03				
Bi-212	5.87E+03	2.50E-09	5.64E-04				
Bi-214	1.33E+06	5.64E-07	1.27E-01				
Fr-223	2.74E+02	1.17E-10	2.64E-05				
Pa-231	1.13E+04	4.79E-09	1.08E-03	1.62E-03	6.67E-01	1.16E-05	4.13E-04
Pa-234	5.00E+00	2.13E-12	4.81E-07				
Pa-234m	3.12E+03	1.33E-09	3.00E-04				
Pb-210	6.73E+05	2.86E-07	6.46E-02	2.43E-01	2.66E-01	1.16E-05	2.47E-02
Pb-211	1.99E+04	8.47E-09	1.91E-03				
Pb-212	5.87E+03	2.50E-09	5.64E-04				
Pb-214	1.33E+06	5.64E-07	1.27E-01				
Po-210	6.61E+05	2.81E-07	6.34E-02	5.41E-01	1.17E-01	1.16E-05	2.42E-02
Po-211	5.40E+01	2.30E-11	5.19E-06				
Po-212	3.76E+03	1.60E-09	3.61E-04				
Po-214	1.33E+06	5.64E-07	1.27E-01				
Po-215	1.99E+04	8.47E-09	1.91E-03				
Po-216	5.87E+03	2.50E-09	5.64E-04				
Po-218	1.33E+06	5.64E-07	1.27E-01				
Ra-223	1.99E+04	8.47E-09	1.91E-03	8.11E-01	2.36E-03	1.16E-05	7.30E-04
Ra-224	5.87E+03	2.50E-09	5.64E-04				
Ra-226	1.33E+06	5.64E-07	1.27E-01	5.41E-01	2.35E-01	1.16E-05	4.86E-02
Ra-228	3.02E+03	1.28E-09	2.39E-04	1.08E+00	2.68E-04	1.16E-05	1.10E-04
Rn-219	1.99E+04	8.47E-09	1.91E-03				
Rn-220	5.87E+03	2.50E-09	5.64E-04				
Rn-222	1.33E+06	5.64E-07	1.27E-01				
Th-227	1.96E+04	8.35E-09	1.88E-03	2.70E-01	6.98E-03	1.16E-05	7.20E-04
Th-228	5.86E+03	2.49E-09	5.62E-04	1.08E-02	5.20E-02	1.16E-05	2.15E-04
Th-230	2.12E+05	9.03E-08	2.04E-02	5.41E-03	3.77E+00	1.16E-05	7.78E-03
Th-231	2.62E+02	1.11E-10	2.51E-05				
Th-232	3.09E+03	1.32E-09	2.98E-04	unlimited			
Th-234	3.12E+03	1.33E-09	3.00E-04	5.41E+00	5.55E-05	1.16E-05	1.15E-04
Tl-207	1.99E+04	8.45E-09	1.91E-03				
Tl-208	2.11E+03	8.98E-10	2.03E-04				
U-234	3.23E+03	1.37E-09	3.09E-04	2.70E-02	1.15E-02	1.16E-05	1.18E-04
U-235	2.62E+02	1.11E-10	2.51E-05	unlimited			
U-238	3.12E+03	1.33E-09	3.00E-04	unlimited			
Sum		4.43E-06			8.66		1.08E-01
		A_2 (Ci) =		Sum^{-1} =	0.116		
		LSA-II limit =	10^{-4} x A_2	(Ci/g) =	1.16E-05		

Table A-2. Silo 3 Material LSA-II Determination Under the New Regulations (60 FR 50292)

Radionuclide	Source Term (pCi/cm²)	K-65 Gems (Ci/g)	f(i)	A_2 Limit (Ci)	$f(i)/A_2$ (Ci^{-1})	LSA-II Limit $10^{-4} \times A_2$ (Ci/g)	Fraction of LSA-II Limit
Ac-227	2.60E+03	1.11E-09	4.19E-03	5.41E-04	7.74E+00	7.78E-07	1.43E-03
Ac-228	1.68E+03	7.15E-10	2.70E-03				
Bi-210	2.53E+04	1.08E-08	4.08E-02			8064	
Bi-211	2.60E+03	1.11E-09	4.19E-03				
Bi-212	1.60E+03	6.81E-10	2.57E-03				
Bi-214	1.39E+04	5.91E-09	2.23E-02				
Fr-223	3.59E+01	1.53E-11	5.77E-05				
Pa-231	2.80E+03	1.19E-09	4.49E-03	1.62E-03	2.77E+00	7.78E-07	1.53E-03
Pa-234	1.20E+01	5.11E-12	1.93E-05				
Pa-234m	7.50E+03	3.19E-09	1.20E-02				
Pb-210	2.53E+04	1.08E-08	4.08E-02	2.43E-01	1.68E-01	7.78E-07	1.39E-02
Pb-211	2.60E+03	1.11E-09	4.19E-03				
Pb-212	1.60E+03	6.81E-10	2.57E-03				
Pb-214	1.39E+04	5.91E-09	2.23E-02				
Po-210	2.55E+04	1.09E-08	4.11E-02	5.41E-01	7.60E-02	7.78E-07	1.40E-02
Po-211	7.10E+00	3.02E-12	1.14E-05				
Po-212	1.02E+03	4.34E-10	1.64E-03				
Po-214	1.39E+04	5.91E-09	2.23E-02				
Po-215	2.60E+03	1.11E-09	4.19E-03				
Po-216	1.60E+03	6.81E-10	2.57E-03				
Po-218	1.39E+04	5.91E-09	2.23E-02				
Ra-223	2.60E+03	1.11E-09	4.19E-03	8.11E-01	5.16E-03	7.78E-07	1.43E-03
Ra-224	1.60E+03	6.81E-10	2.57E-03				
Ra-226	1.39E+04	5.91E-09	2.23E-02	5.41E-01	4.12E-02	7.78E-07	7.60E-03
Ra-228	1.68E+03	7.15E-10	2.70E-03	1.08E+00	2.50E-03	7.78E-07	9.19E-04
Rn-219	2.60E+03	1.11E-09	4.19E-03				
Rn-220	1.60E+03	6.81E-10	2.57E-03				
Rn-222	1.39E+04	5.91E-09	2.23E-02				
Th-227	2.56E+03	1.09E-09	4.11E-03	2.70E-01	1.52E-02	7.78E-07	1.40E-03
Th-228	1.60E+03	6.81E-10	2.57E-03	1.08E-02	2.38E-01	7.78E-07	8.75E-04
Th-230	3.95E+05	1.68E-07	6.34E-01	5.41E-03	1.17E+02	7.78E-07	2.16E-01
Th-231	3.25E+02	1.38E-10	5.21E-04				
Th-232	2.34E+03	9.96E-10	3.76E-03	unlimited			
Th-234	7.50E+03	3.19E-09	1.20E-02	5.41E+00	2.23E-03	7.78E-07	4.10E-03
Tl-207	2.59E+03	1.10E-09	4.15E-03				
Tl-208	2.59E+03	2.44E-10	9.21E-04				
U-234	5.74E+02	2.05E-09	7.74E-03	2.70E-02	2.87E-01	7.78E-07	2.63E-03
U-235	4.81E+03	1.38E-10	5.21E-04	unlimited			
U-238	3.25E+02	3.19E-09	1.20E-02	unlimited			
Sum		2.65E-07			128.53		2.66E-01
		A_2 (Ci) =		Sum^{-1} =	7.78E-03		
		LSA-II limit =	$10^{-4} \times A_2$	(Ci/g) =	7.78E-07		

APPENDIX B

SPREADSHEETS FOR DETERMINATION OF A_2 QUANTITY LIMITS FOR K-65 AND SILO 3 VITRIFIED MATERIAL BASED ON NEW REGULATIONS

A_2 Optimization for Unblended K-65 Gems Based on Proposed Regulations.

Type A Container Study, K-65 Waste Form, Gems
A2 Values Based on Proposed Regulations

Container Type, DOT 7A	Internal Dimensions (Diameter x Height)		Actual Capacity, ft^3 (m^3)	Max. Weight Allowable, lbs (kg)	Maximum A_2 volume, reduced as necessary by container size and weight limits, cm^3 (in^3)	Net Weight, based on A_2 max vol, lbs (kg)	Height of source in container, in. (cm)	Fraction of Container Volume Used	Max Sum of A_2 fractions
1.25-gallon (4.7 liters)	8.5 x 7.5"	(21.6 x 19 cm)	0.25 (0.007)	33 (15)	6974 (426)	28.1 (12.8)	7.50 (19.05)	1.00	0.40
3-gallon (11.4 liters)	10.5 x 8.08"	(26.7 x 20.5 cm)	0.41 (0.011)	60 (27)	11465 (700)	47.0 (21.3)	8.08 (20.52)	1.00	0.67
4-gallon (15.1 liters)	10.5 x 12.86"	(26.7 x 32.7 cm)	0.64 (0.018)	110 (50)	16757 (1023)	70.1 (31.8)	11.81 (30.00)	0.92	1.00
5-gallon (18.9 liters)	10.5 x 14.13"	(26.7 x 35.9 cm)	0.71 (0.020)	160 (73)	16699 (1019)	70.1 (31.8)	11.77 (29.89)	0.83	1.00
5-gallon (18.9 liters)	11.25 x 12.5"	(28.6 x 31.8 cm)	0.72 (0.020)	130 (59)	16669 (1017)	70.1 (31.8)	10.23 (25.99)	0.82	1.00
6-gallon (22.7 liters)	10.5 x 16.74"	(26.7 x 42.5 cm)	0.84 (0.024)	80 (36)	16601 (1013)	70.1 (31.8)	11.70 (29.72)	0.70	1.00
8-gallon (30.3 liters)	10.5 x 21.48"	(26.7 x 54.6 cm)	1.08 (0.030)	80 (36)	16475 (1005)	70.1 (31.8)	11.61 (29.49)	0.54	1.00
9-gallon (34.1 liters)	13.81 x 14.19"	(35.1 x 36 cm)	1.23 (0.034)	100 (45)	16238 (991)	70.1 (31.8)	6.62 (16.80)	0.47	1.00
12-gallon (45.4 liters)	13.81 x 19.68"	(35.1 x 50 cm)	1.71 (0.048)	200 (91)	15986 (976)	70.1 (31.8)	6.51 (16.54)	0.33	1.00

000037

8064

Prepared By: Date: 1/3/05
Checked By: Date: 2/15/05

-- 8064

Type A2 Quantity Limitation for Gems - Proposed Regulations (54 FR 47454).
K-65 Waste Form - 3-gallon container (carbon steel)

Radionuclide	1997 Concentration Value		Adjusted activity for calculated bulk density		Maximum A2 Volume		Ci	Proposed A2 Limit	Proposed A2 fractions
	(Ci/g)	(Ci/cm3)	(Ci/cm3)	(uCi/cm3)	(g)	(cm3)		(Ci)	
Ac-227	6.93E-09	1.99E-08	1.29E-08	1.29E-02	2.13E+04	11,465	1.48E-04	5.40E-04	2.74E-01
Ac-228		3.02E-09	1.96E-09	1.96E-03					
Bi-210		6.72E-07	4.36E-07	4.36E-01					
Bi-211		1.99E-08	1.29E-08	1.29E-02					
Bi-212		5.87E-09	3.81E-09	3.81E-03					
Bi-214		1.33E-06	8.60E-07	8.60E-01					
Fr-223		2.74E-10	1.78E-10	1.78E-04					
Pa-231	3.92E-09	1.13E-08	7.30E-09	7.30E-03	2.13E+04	11,465	8.37E-05	1.62E-03	5.16E-02
Pa-234		4.99E-12	3.24E-12	3.24E-06					
Pa-234m		3.12E-09	2.02E-09	2.02E-03					
Pb-210	2.34E-07	6.73E-07	4.36E-07	4.36E-01	2.13E+04	11,465	5.00E-03	2.43E-01	2.06E-02
Pb-211		1.99E-08	1.29E-08	1.29E-02					
Pb-212		5.87E-09	3.81E-09	3.81E-03					
Pb-214		1.33E-06	8.60E-07	8.60E-01					
Po-210	2.30E-07	6.61E-07	4.29E-07	4.29E-01	2.13E+04	11,465	4.92E-03	5.40E-01	9.10E-03
Po-211		5.43E-11	3.52E-11	3.52E-05					
Po-212		3.76E-09	2.44E-09	2.44E-03					
Po-214		1.33E-06	8.60E-07	8.60E-01					
Po-215		1.99E-08	1.29E-08	1.29E-02					
Po-216		5.87E-09	3.81E-09	3.81E-03					
Po-218		1.33E-06	8.60E-07	8.60E-01					
Ra-223	6.94E-09	1.99E-08	1.29E-08	1.29E-02	2.13E+04	11,465	1.48E-04	8.10E-01	1.83E-04
Ra-224		5.87E-09	3.81E-09	3.81E-03					
Ra-226	4.62E-07	1.33E-06	8.60E-07	8.60E-01	2.13E+04	11,465	9.86E-03	5.40E-01	1.83E-02
Ra-228	1.05E-09	3.02E-09	1.96E-09	1.96E-03	2.13E+04	11,465	2.24E-05	1.08E+00	2.08E-05
Rn-219		1.99E-08	1.29E-08	1.29E-02					
Rn-220		5.87E-09	3.81E-09	3.81E-03					
Rn-222		1.33E-06	8.60E-07	8.60E-01					
Th-227	6.84E-09	1.96E-08	1.27E-08	1.27E-02	2.13E+04	11,465	1.46E-04	2.70E-01	5.40E-04
Th-228	2.04E-09	5.86E-09	3.80E-09	3.80E-03	2.13E+04	11,465	4.35E-05	1.08E-02	4.03E-03
Th-230	7.39E-08	2.12E-07	1.38E-07	1.38E-01	2.13E+04	11,465	1.58E-03	5.40E-03	2.92E-01
Th-231		2.62E-10	1.70E-10	1.70E-04					
Th-232	1.08E-09	3.09E-09	2.01E-09	2.01E-03	2.13E+04	11,465	2.30E-05	unlimited	
Th-234	1.09E-09	3.12E-09	2.02E-09	2.02E-03	2.13E+04	11,465	2.32E-05	5.40E+00	4.29E-06
Tl-207		1.99E-08	1.29E-08	1.29E-02					
Tl-208		2.11E-09	1.37E-09	1.37E-03					
Tl-210									
U-234	1.13E-09	3.23E-09	2.10E-09	2.10E-03	2.13E+04	11,465	2.40E-05	2.70E-02	8.90E-04
U-235	9.13E-11	2.62E-10	1.70E-10	1.70E-04	2.13E+04	11,465	1.95E-06	unlimited	
U-238	1.09E-09	3.12E-09	2.02E-09	2.02E-03	2.13E+04	11,465	2.32E-05	unlimited	
						Total:	0.02	Total:	0.67

Note: Shading indicates inferred values for concentrations.

Prepared By: [signature] Date: 1/3/95
Checked By: [signature] Date: 2/12/95

PA2-3GAL.XLS 1/3/95

Type A2 Quantity Limitation for Gems - Proposed Regulations (54 FR 47454).
K-65 Waste Form - 4-gallon container (carbon steel)

Radionuclide	1997 Concentration Value		Adjusted activity for calculated bulk density		Maximum A2 Volume		Ci	Proposed A2 Limit	Proposed A2 fractions
	(Ci/g)	(Ci/cm3)	(Ci/cm3)	(uCi/cm3)	(g)	(cm3)		(Ci)	
Ac-227	6.93E-09	1.99E-08	1.31E-08	1.31E-02	3.18E+04	16,757	2.20E-04	5.40E-04	4.08E-01
Ac-228		3.02E-09	1.99E-09	1.99E-03					
Bi-210		6.72E-07	4.45E-07	4.45E-01					
Bi-211		1.99E-08	1.32E-08	1.32E-02					
Bi-212		5.87E-09	3.88E-09	3.88E-03					
Bi-214		1.33E-06	8.77E-07	8.77E-01					
Fr-223		2.74E-10	1.81E-10	1.81E-04					
Pa-231	3.92E-09	1.13E-08	7.44E-09	7.44E-03	3.18E+04	16,757	1.25E-04	1.62E-03	7.69E-02
Pa-234		4.99E-12	3.30E-12	3.30E-06					
Pa-234m		3.12E-09	2.06E-09	2.06E-03					
Pb-210	2.34E-07	6.73E-07	4.45E-07	4.45E-01	3.18E+04	16,757	7.45E-03	2.43E-01	3.07E-02
Pb-211		1.99E-08	1.32E-08	1.32E-02					
Pb-212		5.87E-09	3.88E-09	3.88E-03					
Pb-214		1.33E-06	8.77E-07	8.77E-01					
Po-210	2.30E-07	6.61E-07	4.37E-07	4.37E-01	3.18E+04	16,757	7.32E-03	5.40E-01	1.36E-02
Po-211		5.43E-11	3.59E-11	3.59E-05					
Po-212		3.76E-09	2.49E-09	2.49E-03					
Po-214		1.33E-06	8.76E-07	8.76E-01					
Po-215		1.99E-08	1.32E-08	1.32E-02					
Po-216		5.87E-09	3.88E-09	3.88E-03					
Po-218		1.33E-06	8.77E-07	8.77E-01					
Ra-223	6.94E-09	1.99E-08	1.32E-08	1.32E-02	3.18E+04	16,757	2.21E-04	8.10E-01	2.72E-04
Ra-224		5.87E-09	3.88E-09	3.88E-03					
Ra-226	4.62E-07	1.33E-06	8.77E-07	8.77E-01	3.18E+04	16,757	1.47E-02	5.40E-01	2.72E-02
Ra-228	1.05E-09	3.02E-09	1.99E-09	1.99E-03	3.18E+04	16,757	3.34E-05	1.08E+00	3.09E-05
Rn-219		1.99E-08	1.32E-08	1.32E-02					
Rn-220		5.87E-09	3.88E-09	3.88E-03					
Rn-222		1.33E-06	8.77E-07	8.77E-01					
Th-227	6.84E-09	1.96E-08	1.30E-08	1.30E-02	3.18E+04	16,757	2.17E-04	2.70E-01	8.05E-04
Th-228	2.04E-09	5.86E-09	3.87E-09	3.87E-03	3.18E+04	16,757	6.49E-05	1.08E-02	6.01E-03
Th-230	7.39E-08	2.12E-07	1.40E-07	1.40E-01	3.18E+04	16,757	2.35E-03	5.40E-03	4.35E-01
Th-231		2.62E-10	1.73E-10	1.73E-04					
Th-232	1.08E-09	3.09E-09	2.04E-09	2.04E-03	3.18E+04	16,757	3.43E-05	unlimited	
Th-234	1.09E-09	3.12E-09	2.06E-09	2.06E-03	3.18E+04	16,757	3.46E-05	5.40E+00	6.40E-06
Tl-207		1.99E-08	1.31E-08	1.31E-02					
Tl-208		2.11E-09	1.40E-09	1.40E-03					
Tl-210									
U-234	1.13E-09	3.23E-09	2.14E-09	2.14E-03	3.18E+04	16,757	3.58E-05	2.70E-02	1.33E-03
U-235	9.13E-11	2.62E-10	1.73E-10	1.73E-04	3.18E+04	16,757	2.90E-06	unlimited	
U-238	1.09E-09	3.12E-09	2.06E-09	2.06E-03	3.18E+04	16,757	3.46E-05	unlimited	
						Total:	0.03	Total:	1.00

Note: Shading indicates inferred values for concentrations.

Prepared By: [illegible] Date: 1/3/95
Checked By: [illegible] Date: 1/12/95

A_2 Optimization for Unblended Silo 3 Gems Based on Proposed Regulations.

Type A Container Study, Silo 3 Waste Form, Gems
A2 Values Based on Proposed Regulations

Container Type, DOT 7A	Internal Dimensions (Diameter x Height)		Actual Capacity, ft^3 (m^3)	Max. Weight Allowable, lbs (kg)	Maximum A_2 volume, reduced as necessary by container size and weight limits, cm^3 (in^3)	Net Weight, based on A_2 max vol, lbs (kg)	Height of source in container, in. (cm)	Fraction of Container Volume Used	Max Sum of A_2 fractions
1.25-gallon (4.7 liters)	8.5 x 7.5"	(21.6 x 19 cm)	0.25 (0.007)	33 (15)	6974 (426)	27.9 (12.7)	7.50 (19.05)	1.00	0.36
3-gallon (11.4 liters)	10.5 x 8.08"	(26.7 x 20.5 cm)	0.41 (0.011)	60 (27)	11465 (700)	46.7 (21.2)	8.08 (20.52)	1.00	0.60
4-gallon (15.1 liters)	10.5 x 12.86"	(26.7 x 32.7 cm)	0.64 (0.018)	110 (50)	18248 (1114)	75.8 (34.4)	12.86 (32.66)	1.00	0.97
5-gallon (18.9 liters)	10.5 x 14.13"	(26.7 x 35.9 cm)	0.71 (0.020)	160 (73)	18817 (1148)	78.4 (35.6)	13.26 (33.68)	0.94	1.00
5-gallon (18.9 liters)	11.25 x 12.5"	(28.6 x 31.8 cm)	0.72 (0.020)	130 (59)	18783 (1146)	78.4 (35.6)	11.53 (29.29)	0.92	1.00
6-gallon (22.7 liters)	10.5 x 16.74"	(26.7 x 42.5 cm)	0.84 (0.024)	80 (36)	18707 (1142)	78.4 (35.6)	13.18 (33.49)	0.79	1.00
8-gallon (30.3 liters)	10.5 x 21.48"	(26.7 x 54.6 cm)	1.08 (0.030)	80 (36)	18564 (1133)	78.4 (35.6)	13.08 (33.23)	0.61	1.00
9-gallon (34.1 liters)	13.81 x 14.19"	(35.1 x 36 cm)	1.23 (0.034)	100 (45)	18297 (1117)	78.4 (35.6)	7.45 (18.93)	0.53	1.00
12-gallon (45.4 liters)	13.81 x 19.68"	(35.1 x 50 cm)	1.71 (0.048)	200 (91)	18013 (1099)	78.4 (35.6)	7.34 (18.64)	0.37	1.00

Prepared By: [illegible] Date: 12/21/94
Checked By: [illegible] Date: 2/13/95

TA2-GP.XLS 12/21/94

Type A2 Quantity Limitation for Gems - Proposed Regulations (54 FR 47454, Docket No. HM-169A). -- 8064
Silo 3 Material - 3-gallon container (carbon steel)

Radionuclide	1997 Concentration Value		Adjusted activity for calculated bulk density		Maximum A2 Volume		Ci	Proposed A2 Limit (Ci)	Propsed A2 fractions
	(Ci/g)	(Ci/cm3)	(Ci/cm3)	(uCi/cm3)	(g)	(cm3)			
Ac-227	9.13E-10	2.60E-09	1.69E-09	1.69E-03	2.12E+04	11,465	1.93E-05	5.40E-04	3.58E-02
Ac-228		1.68E-09	1.09E-09	1.09E-03					
Bi-210		2.53E-08	1.64E-08	1.64E-02					
Bi-211		2.60E-09	1.69E-09	1.69E-03					
Bi-212		1.60E-09	1.04E-09	1.04E-03					
Bi-214		1.39E-08	9.00E-09	9.00E-03					
Fr-223		3.60E-11	2.33E-11	2.33E-05					
Pa-231	9.75E-10	2.78E-09	1.80E-09	1.80E-03	2.12E+04	11,465	2.07E-05	1.62E-03	1.28E-02
Pa-234		1.20E-11	7.78E-12	7.78E-06					
Pa-234m		7.50E-09	4.87E-09	4.87E-03					
Pb-210	8.89E-09	2.53E-08	1.64E-08	1.64E-02	2.12E+04	11,465	1.88E-04	2.43E-01	7.75E-04
Pb-211		2.60E-09	1.69E-09	1.69E-03					
Pb-212		1.60E-09	1.04E-09	1.04E-03					
Pb-214		1.39E-08	9.00E-09	9.00E-03					
Po-210	8.96E-09	2.55E-08	1.66E-08	1.66E-02	2.12E+04	11,465	1.90E-04	5.40E-01	3.52E-04
Po-211		7.00E-12	4.54E-12	4.54E-06					
Po-212		1.02E-09	6.64E-10	6.64E-04					
Po-214		1.39E-08	9.00E-09	9.00E-03					
Po-215		2.60E-09	1.69E-09	1.69E-03					
Po-216		1.60E-09	1.04E-09	1.04E-03					
Po-218		1.39E-08	9.00E-09	9.00E-03					
Ra-223	9.12E-10	2.60E-09	1.69E-09	1.69E-03	2.12E+04	11,465	1.93E-05	8.10E-01	2.39E-05
Ra-224		1.60E-09	1.04E-09	1.04E-03					
Ra-226	4.87E-09	1.39E-08	9.01E-09	9.01E-03	2.12E+04	11,465	1.03E-04	5.40E-01	1.91E-04
Ra-228	5.88E-10	1.68E-09	1.09E-09	1.09E-03	2.12E+04	11,465	1.25E-05	1.08E+00	1.15E-05
Rn-219		2.60E-09	1.69E-09	1.69E-03					
Rn-220		1.60E-09	1.04E-09	1.04E-03					
Rn-222		1.39E-08	9.00E-09	9.00E-03					
Th-227	9.00E-10	2.56E-09	1.66E-09	1.66E-03	2.12E+04	11,465	1.91E-05	2.70E-01	7.06E-05
Th-228	5.61E-10	1.60E-09	1.04E-09	1.04E-03	2.12E+04	11,465	1.19E-05	1.08E-02	1.10E-03
Th-230	1.38E-07	3.94E-07	2.56E-07	2.56E-01	2.12E+04	11,465	2.93E-03	5.40E-03	5.43E-01
Th-231		3.25E-10	2.11E-10	2.11E-04					
Th-232	8.21E-10	2.34E-09	1.52E-09	1.52E-03	2.12E+04	11,465	1.74E-05	unlimited	
Th-234	2.63E-09	7.50E-09	4.87E-09	4.87E-03	2.12E+04	11,465	5.58E-05	5.40E+00	1.03E-05
Tl-207		2.59E-09	1.68E-09	1.68E-03					
Tl-208		5.74E-10	3.72E-10	3.72E-04					
Tl-210									
U-234	1.69E-09	4.81E-09	3.12E-09	3.12E-03	2.12E+04	11,465	3.57E-05	2.70E-02	1.32E-03
U-235	1.14E-10	3.25E-10	2.11E-10	2.11E-04	2.12E+04	11,465	2.42E-06	unlimited	
U-238	2.63E-09	7.50E-09	4.87E-09	4.87E-03	2.12E+04	11,465	5.58E-05	unlimited	
							0.00		0.60

Note: Shading indicates inferred values for concentrations.

Calculation Sign-Off
Prepared By: [illegible] Date: 12/22/94
Checked By: [illegible] Date: 2/12/95

PA2-3G.XLS 12/22/94

000041

Type A2 Quantity Limitation for Gems - Proposed Regulations (54 FR 47454, Docket No. HM-169A).
Silo 3 Material - 4-gallon container (carbon steel)

Radionuclide	1997 Concentration Value		Adjusted activity for calculated bulk density		Maximum A2 Volume		Ci	Proposed A2 Limit (Ci)	Proposed A2 fractions
	(Ci/g)	(Ci/cm3)	(Ci/cm3)	(uCi/cm3)	(g)	(cm3)			
Ac-227	9.13E-10	2.60E-09	1.72E-09	1.72E-03	3.44E+04	18,248	3.14E-05	5.40E-04	5.81E-02
Ac-228		1.68E-09	1.11E-09	1.11E-03					
Bi-210		2.53E-08	1.67E-08	1.67E-02					
Bi-211		2.60E-09	1.72E-09	1.72E-03					
Bi-212		1.60E-09	1.06E-09	1.06E-03					
Bi-214		1.39E-08	9.18E-09	9.18E-03					
Fr-223		3.60E-11	2.38E-11	2.38E-05					
Pa-231	9.75E-10	2.78E-09	1.84E-09	1.84E-03	3.44E+04	18,248	3.35E-05	1.62E-03	2.07E-02
Pa-234		1.20E-11	7.93E-12	7.93E-06					
Pa-234m		7.50E-09	4.96E-09	4.96E-03					
Pb-210	8.89E-09	2.53E-08	1.67E-08	1.67E-02	3.44E+04	18,248	3.06E-04	2.43E-01	1.26E-03
Pb-211		2.60E-09	1.72E-09	1.72E-03					
Pb-212		1.60E-09	1.06E-09	1.06E-03					
Pb-214		1.39E-08	9.18E-09	9.18E-03					
Po-210	8.96E-09	2.55E-08	1.69E-08	1.69E-02	3.44E+04	18,248	3.08E-04	5.40E-01	5.70E-04
Po-211		7.00E-12	4.63E-12	4.63E-06					
Po-212		1.02E-09	6.77E-10	6.77E-04					
Po-214		1.39E-08	9.17E-09	9.17E-03					
Po-215		2.60E-09	1.72E-09	1.72E-03					
Po-216		1.60E-09	1.06E-09	1.06E-03					
Po-218		1.39E-08	9.18E-09	9.18E-03					
Ra-223	9.12E-10	2.60E-09	1.72E-09	1.72E-03	3.44E+04	18,248	3.14E-05	8.10E-01	3.87E-05
Ra-224		1.60E-09	1.06E-09	1.06E-03					
Ra-226	4.87E-09	1.39E-08	9.18E-09	9.18E-03	3.44E+04	18,248	1.68E-04	5.40E-01	3.10E-04
Ra-228	5.88E-10	1.68E-09	1.11E-09	1.11E-03	3.44E+04	18,248	2.02E-05	1.08E+00	1.87E-05
Rn-219		2.60E-09	1.72E-09	1.72E-03					
Rn-220		1.60E-09	1.06E-09	1.06E-03					
Rn-222		1.39E-08	9.18E-09	9.18E-03					
Th-227	9.00E-10	2.56E-09	1.70E-09	1.70E-03	3.44E+04	18,248	3.09E-05	2.70E-01	1.15E-04
Th-228	5.61E-10	1.60E-09	1.06E-09	1.06E-03	3.44E+04	18,248	1.93E-05	1.08E-02	1.79E-03
Th-230	1.38E-07	3.94E-07	2.61E-07	2.61E-01	3.44E+04	18,248	4.76E-03	5.40E-03	8.81E-01
Th-231		3.25E-10	2.15E-10	2.15E-04					
Th-232	8.21E-10	2.34E-09	1.55E-09	1.55E-03	3.44E+04	18,248	2.82E-05	unlimited	
Th-234	2.63E-09	7.50E-09	4.96E-09	4.96E-03	3.44E+04	18,248	9.05E-05	5.40E+00	1.68E-05
Tl-207		2.59E-09	1.71E-09	1.71E-03					
Tl-208		5.74E-10	3.80E-10	3.80E-04					
Tl-210									
U-234	1.69E-09	4.81E-09	3.18E-09	3.18E-03	3.44E+04	18,248	5.80E-05	2.70E-02	2.15E-03
U-235	1.14E-10	3.25E-10	2.15E-10	2.15E-04	3.44E+04	18,248	3.92E-06	unlimited	
U-238	2.63E-09	7.50E-09	4.96E-09	4.96E-03	3.44E+04	18,248	9.05E-05	unlimited	
							0.01		0.97

Note: Shading indicates inferred values for concentrations.

Calculation Sign-Off
Prepared By: [illegible] Date: 12/22/94
Checked By: [illegible] Date: 2/13/95

PA2-4G.XLS 12/22/94

APPENDIX C

MANUFACTURER DESIGN SPECIFICATIONS FOR ENDUROK-112™ AND SQUAREPAK-112™ CONTAINERS

SCIENTIFIC ECOLOGY GROUP
A Westinghouse Subsidiary

SQUAREPAK™ SERIES

DATA SHEET NO. SM-01
REV. NO. 0
SHEET 1 OF 2

--8064

Container Functions: Storage
Construction Material: Reinforced Concrete
Qualifications: Meets NRC Waste Storage Guidelines

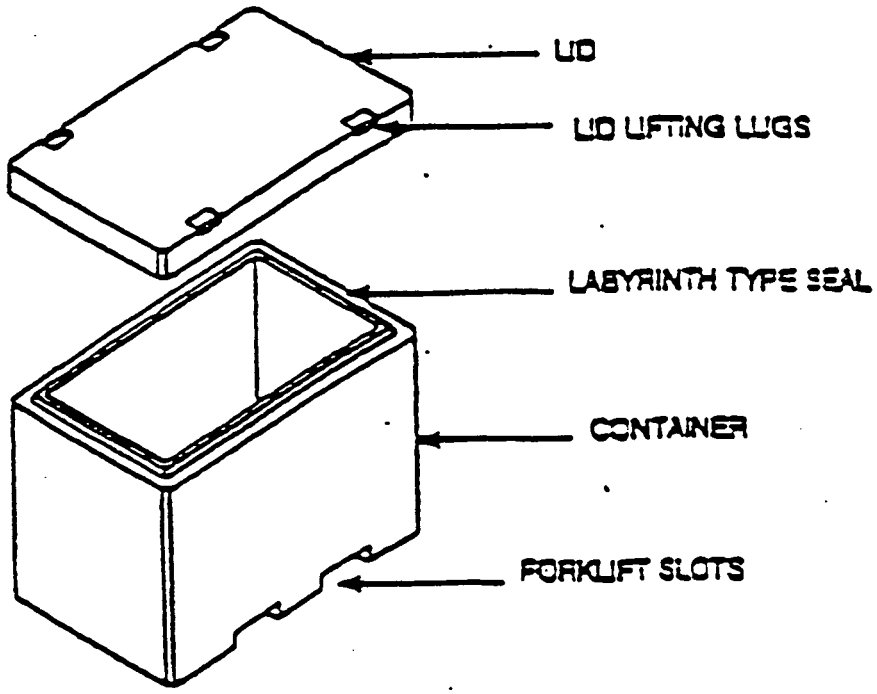

SQUAREPAK

SPECIAL FEATURES

- ✓ HEAVY SHIELDING (6" WALL STD.)
- ✓ HIGH STRENGTH CONCRETE (>6000 psi COMPRESSIVE STRENGTH)
- ✓ NEOPRENE WEATHER SEAL
- ✓ STACKABLE TO THREE HIGH

OPTIONAL FEATURES

- ✓ IMPERMEABLE COATINGS
- ✓ LINERS
- ✓ SHIELDING INSERTS
- ✓ HIGH DENSITY CONCRETE
- ✓ PASSIVE VENT

SCIENTIFIC ECOLOGY GROUP
A Westinghouse Subsidiary

SQUAREPAK™ SERIES

DATA SHEET NO. SS-41
REV. NO. 8
SHEET 2 OF 2

8064

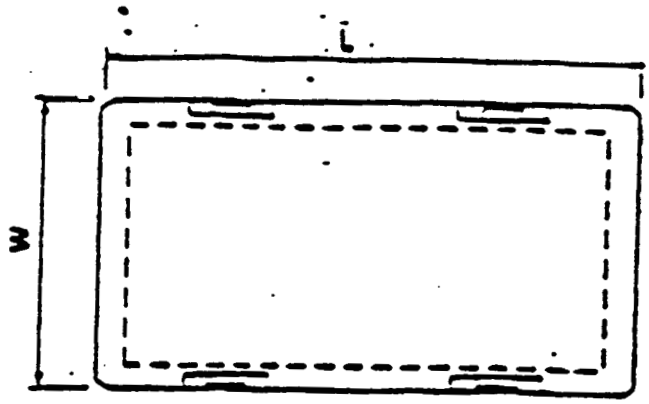

TOP VIEW

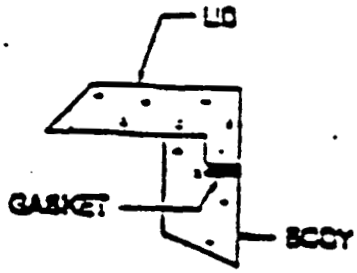

DETAIL

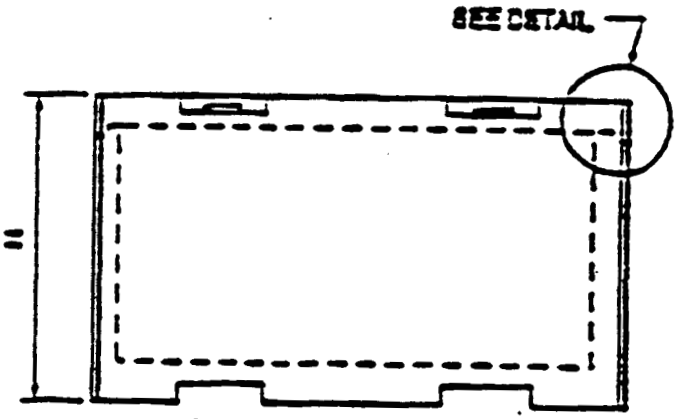

SIDE VIEW

DIMENSIONS AND DESIGN DATA	MODELS		
	SQ-112	SQ-224	SQ-448
External (in) L x W x H	85 x 62 x 68	85 x 62 x 122	85 x 112 x 122
Internal (in) L x W x H	73 x 50 x 53	73 x 50 x 108	73 x 100 x 108
Internal Volume (cu ft)	112	224	448
Empty Weight (lbs)	15,000	22,000	33,500
Max. Gross Weight (lbs)	25,000	42,000	73,500

SCIENTIFIC ECOLOGY GROUP
A Westinghouse Subsidiary

ENDUROROK™ SERIES

DATA SHEET NO. DC-13
REV. NO. 6
SHEET 1 OF 2

- 8064

Container Functions: Processing, Storage, Transportation, and Disposal
Construction Material: Steel Fiber Reinforced Concrete
Qualifications: DOT Type A (Pending) (and all Industrial Package requirements)

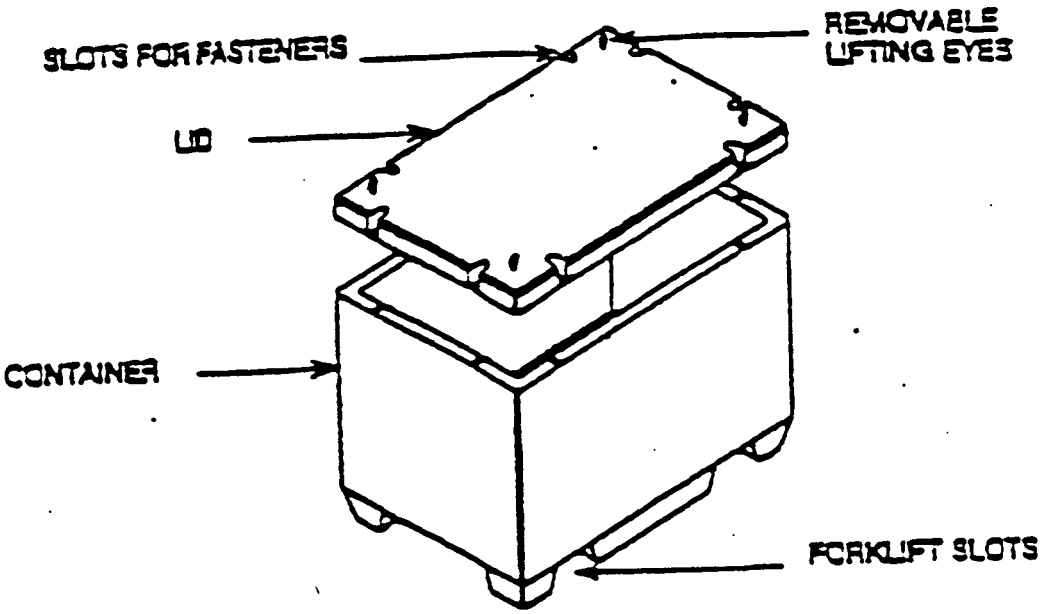

ENDUROROK

SPECIAL FEATURES

- ✓ STAINLESS STEEL (CORROSION RESISTANT) FIBER REINFORCEMENT
- ✓ VERY HIGH STRENGTH CONCRETE (>7500 psi COMPRESSIVE STRENGTH)
- ✓ THIN WALL (HIGH PACKAGING EFFICIENCY)
- ✓ STAINLESS STEEL HARDWARE
- ✓ STACKABLE - TESTED TO 5 TIMES THE CONTAINER'S GROSS WEIGHT

OPTIONAL FEATURES

- ✓ IMPERMEABLE COATINGS
- ✓ CAST-IN-PLACE POLYETHYLENE LINING
- ✓ SHIELDING INSERTS
- ✓ PASSIVE VENT

SCIENTIFIC ECOLOGY GROUP
A Westinghouse Subsidiary

ENDUROROK™ SERIES

DATA SHEET NO. DC-13
REV. NO. 8
SHEET 2 OF 2

8064

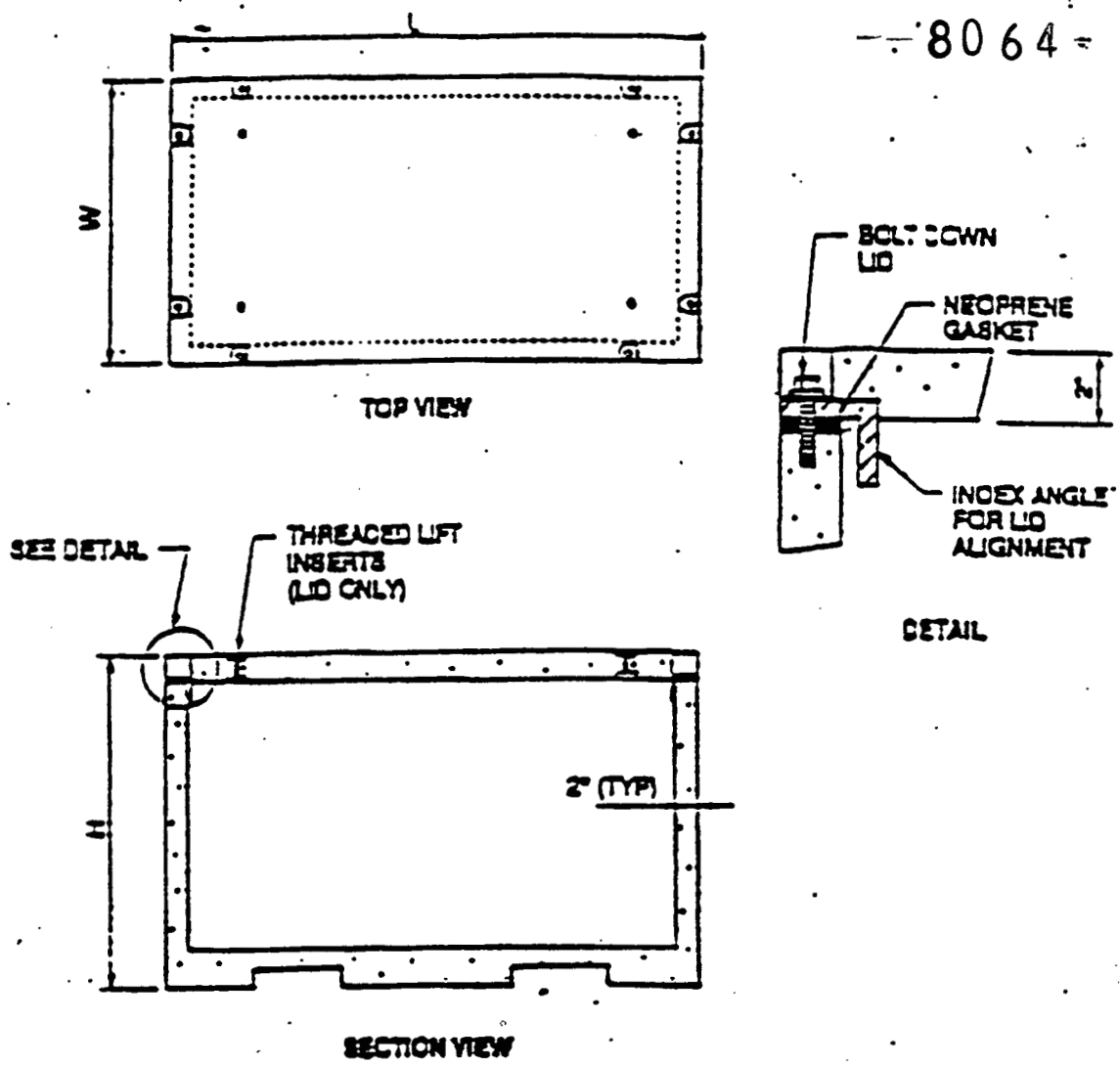

DIMENSIONS AND DESIGN DATA	MODELS		
	ER-60	ER-96	ER-112
External (in) L x W x H	75 x 38 x 51	76 x 52 x 58	77 x 54 x 61
Internal (in) L x W x H	71 x 34 x 43	72 x 48 x 48	73 x 50 x 53
Internal Volume (cu ft)	60	96	112
Burial Volume (cu ft)	84	128	147
Empty Weight (lbs)	2,700	3,850	4,350
Max. Gross Weight (lbs)	10,000	10,000	10,000

APPENDIX D

DOE-NV LETTER APPROVING BYPRODUCT MATERIAL AS "SMALL VOLUME"

Department of Energy
Nevada Operations Office
P.O. Box 98518
Las Vegas, NV 89193-8518

-- 8064

JAN 17 1995

Jack R. Craig, Acting Director, DOE Fernald Area Office, Cincinnati, OH

RESOLUTION TO THE REQUEST FOR APPROVAL TO DISPOSE OF 11(e)2 BYPRODUCT MATERIAL AT THE NEVADA TEST SITE

References: (1) Memorandum, Lyde to Fiore, dtd 11/16/94 (enclosed)
(2) Memorandum, Fiore to Lyde, dtd 2/15/94 (enclosed)
(3) Memorandum, Hamric to Aquilina, dtd 2/11/94

The J. P. Hamric to N. C. Aquilina memorandum, referenced above, requested our office to evaluate whether the 11(e)2 byproduct material contained in the K-65 and cold metal oxide silos could be disposed at the Nevada Test Site pursuant to DOE Order 5820.2A, Chapter IV.

We have completed a review in conjunction with DOE Headquarters and have determined that this 11(e)2 byproduct material meets the intent of the small volume discussion in DOE Order 5820.2A, Chapter IV. See referenced memorandums (1) and (2) above.

This conclusion allows your facility to pursue qualification of the vitrified silo residues as an approved waste stream in the regular manner under the current version Nevada Test Site Defense Waste Acceptance Criteria, Certification, and Transfer Requirements, NVO-325. It should be noted that we are also evaluating a number of operational considerations regarding this particular waste stream (i.e., disposal configuration). Additional information may be necessary to complete our operational evaluation. We will request any information through our normal NVO-325 points of contact unless otherwise advised by your office. If our evaluation identifies any concerns that would appear to impact and/or complicate our ability to dispose of this waste stream, we will notify your office as soon as possible.

If you have any questions, please contact Wendy A. Griffin, Waste Management Division, at (702) 295-6751.

Joseph N. Fiore

Joseph N. Fiore, Assistant Manager
for Environmental Restoration and
Waste Management

WMD:WAG

United States
Environmental Protection
Agency

Office of Public Affairs
Region 5
77 West Jackson Boulevard
Chicago, Illinois 60604

Illinois Indiana
Michigan Minnesota
Ohio Wisconsin

EPA, DOE Settle Dispute for Fernald Environmental Management Project

Fernald, Ohio **August 1997**

INTRODUCTION

The U.S. Environmental Protection Agency (U.S. EPA) and the U.S. Department of Energy (U.S. DOE) signed a dispute resolution settlement agreement on July 22, 1997, for the Fernald Environmental Management Project (FEMP) site in Fernald, Ohio. The agreement resolves disputed matters relating to a time extension requested by U.S. DOE to submit Operable Unit (OU) 4 environmental remediation documents to U.S. EPA. U.S. DOE is expected to spend about $1.1 million to meet the requirements of the agreement.

Under a September 1991 amended consent agreement, U.S. EPA is overseeing U.S. DOE's environmental study and cleanup at the FEMP site. Because of its complexity, the FEMP site has been divided into five sections known as OUs. OU 4 is made up of four silos, Silos 1 through 4, and the structures and soils surrounding them. Silos 1 and 2 contain sludgelike

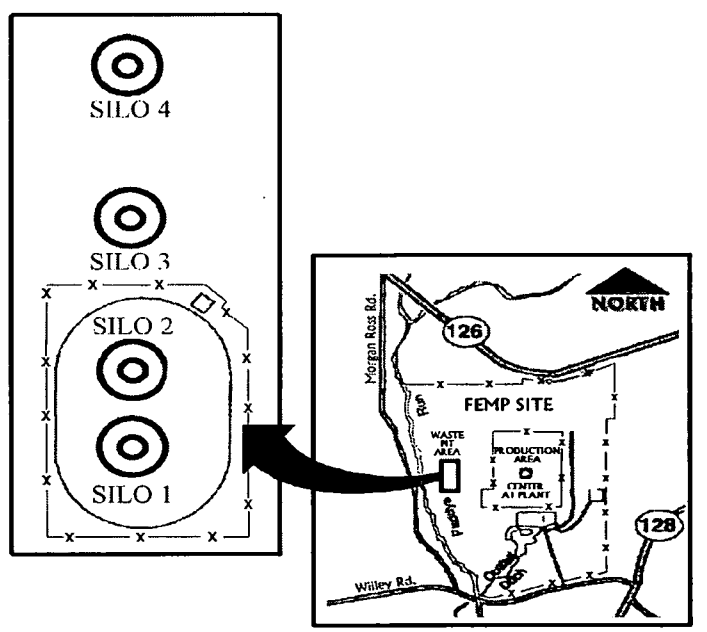

FEMP SITE
OPERABLE UNIT 4

This Fact Sheet Explains:

- The dispute resolution settlement agreement for OU 4
- The components of the agreement
- The next step in the process
- How to obtain additional information

Public Comment Period

U.S. EPA will accept written comments on the dispute resolution settlement agreement during a 30-day public comment period to be held from **August 4 through September 3, 1997.**

Public Meeting

U.S. EPA will hold a public meeting to explain and answer questions about the agreement. Oral and written comments will be accepted at the meeting to be held:

Date: Tuesday
August 26, 1997
Time: 6 p.m.
Place: Alpha Building
(Classroom D)
10967 Hamilton-Cleves
Road
Harrison, OH

radium waste, Silo 3 contains powdery cold metal oxides, and Silo 4 is empty.

On September 26, 1996, U.S. DOE requested a time extension to submit design documents to U.S. EPA for a full-scale vitrification (waste treatment) facility to be built at OU 4. U.S. EPA denied the request on October 2, 1996, and informed U.S. DOE that it would assess penalties for not meeting the original document submittal dates required by the amended consent agreement. Upon receiving U.S. EPA's denial of the request, U.S. DOE invoked the informal dispute resolution process outlined in the amended consent agreement to resolve the issue. U.S. EPA and U.S. DOE engaged in dispute resolution between October 1996 and July 1997.

AGREEMENT COMPONENTS

The dispute resolution settlement agreement consists of four components: (1) changes in the schedule for OU 4; (2) preparation of a document describing "lessons learned" by U.S. DOE regarding implementation of large-scale cleanups; (3) implementation of five environmental projects designed to directly benefit the FEMP site; and (4) a monetary penalty of $100,000. A discussion of the agreement components follows.

SCHEDULE CHANGES

U.S. EPA and U.S. DOE have agreed to a revised schedule and path forward for OU 4 document submittals and remediation milestones. Along with the revised schedule, U.S. DOE has made a commitment to reassess and maintain the structural integrity of the OU 4 silos and continue to monitor and treat radon gas emissions at OU 4. As part of the dispute settlement, based on U.S. EPA guidance, U.S. DOE has agreed to proceed with an explanation of significant differences for Silo 3, and amend the record of decision for Silos 1 and 2.

The revised document and milestone due dates are listed below.

"LESSONS LEARNED" DOCUMENT

U.S. DOE prepared a document outlining the "lessons learned" during design, construction, and operation of a vitrification pilot plant at OU 4. The lessons will serve as a guide for design and operation of other pilot-scale and full-scale remedies for OU 4. In addition, the document will highlight many of the lessons learned during the pilot plant design, construction, and operation phases for application during planning and implementation of other waste treatment and remediation projects at the FEMP site.

Document or Milestone	Revised Due Date
Silo 3 explanation of significant differences	September 15, 1997
Award of multitechnical contract for proof of principle Silo 1 and 2 testing	August 10, 1998
Draft supplemental Silo 1 and 2 feasibility study and proposed plan	February 1, 2000
Draft Silo 1 and 2 record of decision amendment	December 29, 2000

ENVIRONMENTAL PROJECTS

U.S. DOE has agreed to conduct five environmental projects that will improve conditions at the FEMP site. The total cost of these projects is estimated at $1 million.

1. Conservation area near the FEMP site-- A conservation area will be established on a piece of property near the site. The conservation area will preserve wildlife habitats near the site and therefore enhance the proposed natural resource restoration plan for the FEMP site.

2. Research grants for ecological restoration-- U.S. DOE will establish grants for research projects that will support restoration efforts at the FEMP site. U.S. DOE, in conjunction with U.S. EPA and the Ohio Environmental Protection Agency (Ohio EPA), will review grant proposals and select the proposed projects that are most beneficial to FEMP restoration efforts.

3. Wild bird and flower habitat area-- A protected habitat will be created in an area of the FEMP site for regional wild birds and flowers. The project, which will be implemented to benefit FEMP site employees, visitors, and neighbors, will include planting wild flowers, installing bird feeders and a bird blind, and creating pathways.

4. Railroad track recycling-- Steel railroad tracks from the site's former process area will be decontaminated and transported off site for recycling. An estimated 300 to 500 tons of tracks will be recycled under this project, which otherwise may have been disposed of in the on-site disposal facility.

5. Structural steel debris recycling-- Structural steel debris and oversized items such as steel barriers, steel mill rollers, and large steel tanks will be tested for radiological contamination, decontaminated, and transported off site for recycling. An estimated 300 to 500 tons of steel debris will be recycled under this project, which otherwise may have been disposed of in the on-site disposal facility.

MONETARY PENALTY

Under the agreement, U.S. DOE will pay a penalty of $100,000. As a result of this penalty and the environmental projects that U.S. DOE will conduct at the FEMP site, the agreement will cost U.S. DOE an estimated $1.1 million. After considering several factors, including U.S. DOE's willingness to implement the environmental projects and take other measures to put the remediation of OU 4 back on course, U.S. EPA determined that a $100,000 penalty is appropriate.

THE NEXT STEP

U.S. EPA will accept public comments on the dispute resolution settlement agreement during a 30-day public comment period from August 4 through September 3, 1997. Comments may be recorded on the comment form provided in this fact sheet and mailed to U.S. EPA at the address provided on the form. Comments must be postmarked by September 3, 1997. Comments on the agreement will also be accepted at U.S. EPA's public meeting on August 26, 1997. All public comments will be considered by U.S. EPA and U.S. DOE, and the agreement may be revised based on the comments. Public comments will be responded to in writing.

ADDITIONAL INFORMATION

The dispute resolution settlement agreement is available for public review along with other site-related documents in the information repository at:

Public Environmental Information Center
108 Hamilton-Cleves Road
Harrison, Ohio

If you have questions about the agreement or other matters related to the FEMP site, please contact one of the following individuals:

Jim Saric
Remedial Project Manager (SRF-5J)
U.S. Environmental Protection Agency Region 5
Superfund Division
Federal Facilities Section

Susan Pastor
Community Involvement Coordinator (P-19J)
U.S. Environmental Protection Agency Region 5
Office of Public Affairs

77 West Jackson Boulevard
Chicago, IL 60604

E-mail: saric.james@epamail.epa.gov
Telephone: (312) 886-0992

E-mail: pastor.susan@epamail.epa.gov
Telephone: (312) 353-1325

or toll free at: (800) 621-8431

EPA

United States
Environmental Protection Agency
Region 5 (P-19J)
77 West Jackson Boulevard
Chicago, IL 60604-3590

FIRST CLASS

ADDRESS CORRECTION REQUESTED

INSIDE: **Information on a Dispute Settlement for the Fernald Environmental Management Project Site**

USE THIS SPACE TO WRITE YOUR COMMENTS

Your input on the dispute resolution agreement between U.S. EPA and U.S DOE is important. You may use the space below to record your comments. All comments must be postmarked by September 3, 1997. If you have questions about the comment period, please contact Susan Pastor, U.S. EPA Community Involvement Coordinator, at (312) 353-1325 or toll free at (800) 621-8431. Comments may also be sent electronically to pastor.susan@epamail.epa.gov.

Name _____

Affiliation _____

Address _____

City _____

State _____ Zip _____

FEMP SITE
PUBLIC COMMENT SHEET

Fold on dashed lines, staple, stamp, and mail.

Name _____
Address _____
City _____ State ____
Zip _____

Place
stamp
here
FIRST CLASS

Susan Pastor
Community Involvement Coordinator (P-19J)
Office of Public Affairs
U.S. Environmental Protection Agency
Region 5
77 West Jackson Boulevard
Chicago, IL 60604