G-000-705.86

5200

CLOSURE PLAN INFORMATION AND DATA FOR THE NITRIC ACID RECOVERY (NAR) SYSTEM COMPONENTS REVISION 0 JUNE 1993

06/29/93

SD-EES-C10-CPA-10009
DOE-FN/OEPA
238
REPORT

-5200

SD-EES-C10-CPI-10009

CLOSURE PLAN INFORMATION AND DATA FOR THE NAR SYSTEM COMPONENTS

Revision 0
June 1993

Fernald Office
U. S. Department of Energy
Fernald Environmental Management Project
7400 Willey Road
Fernald, Ohio 45030

00 1

TABLE OF CONTENTS

1.0 INTRODUCTION 1
1.1 Purpose 1
1.2 Background 2
1.3 Regulatory Impacts and Exemptions 3
1.3.1 Radioactive Mixed and RCRA Wastes 3
1.3.2 Integration of CERCLA Remedial and Removal Actions with RCRA Closures 4
1.3.3 Financial and Liability Exemptions 7

2.0 SUMMARY OF HWMU INFORMATION 8
2.1 Waste Management Unit Description 8
2.2 Waste Inventory 12
2.3 Current Use 12
2.4 Security 12

3.0 CLOSURE INFORMATION 13
3.1 Closure Objectives and Performance Standards 13
3.1.1 Clean Up Action Levels 13
3.2 Closure Methodology 14
3.2.1 Removal of Wastes and Decontamination of NAR System Components 15
3.2.2 Use and Treatment of Nitric Acid Wastes and Rinseate 17
3.2.3 Dismantling and Disposition of NAR System Components 19
3.2.4 Containment Structure 20
3.3 Decontamination of Equipment Used During Closure 21
3.4 Sampling and Analysis 22
3.5 Management of Waste Generated During Closure 22
3.6 Health and Safety 23

4.0 CLOSURE CERTIFICATION 25
4.1 RCRA Closure Standards for Clean Determinations 25
4.2 Certification Inspections 25
4.3 Certification Documents 26
4.4 Statement of Certification 27

5.0 SCHEDULE 28

LIST OF TABLES

Table	Title	Page
TABLE 1:	HAZARDOUS WASTE STORED IN THE NAR SYSTEM COMPONENTS . . .	31
TABLE 2:	CLEAN UP ACTION LEVELS	32
TABLE 3:	CERCLA RESPONSE ACTION SCHEDULES AND STATUS	33

LIST OF FIGURES

Figure	Title	Page
FIGURE 1	FEMP AND VICINITY MAP	34
FIGURE 2	AREA LOCATION MAP - NAR SYSTEM COMPONENTS	35
FIGURE 3	PLAN LAYOUT OF THE NAR SYSTEM COMPONENTS	36

LIST OF ATTACHMENTS

Attachment	Title
A	SAMPLING AND ANALYSIS PLAN FOR THE NAR SYSTEM COMPONENTS
B	PRELIMINARY DATA FOR MEDIA CONTAMINATION AT PLANT 2/3
C	REMOVAL ACTION #20 TEST DATA REPORT
D	GUIDELINE FOR PREPARATION OF HEALTH AND SAFETY PLANS

CLOSURE PLAN INFORMATION AND DATA FOR THE NAR SYSTEM COMPONENTS
U. S. Department of Energy, Fernald Office
Fernald Environmental Management Project
Fernald, Ohio

1.0 INTRODUCTION

1.1 Purpose

This Closure Plan Information and Data (CPID) for the Nitric Acid Recovery (NAR) System Components [Hazardous Waste Management Unit (HWMU) No. 10] is being submitted as a partial Resource Conservation and Recovery Act (RCRA) facility closure of the Fernald Environmental Management Project (FEMP). Consistent with OAC 3745-66, 40 CFR 265 Subpart G, and the State of Ohio and U. S. Department of Energy (DOE) Stipulated Amendment to the Consent Decree (SACD), this document describes the activities that will be conducted to meet the intent of RCRA closure for the NAR System Components. This CPID will be implemented through Comprehensive Environmental Response, Compensation, and Liability (CERCLA) removal and remedial actions at the FEMP.

This CPID has been prepared to ensure that the RCRA closure requirements are substantively achieved as a function of clean up actions currently planned at the FEMP. Closure of the NAR System Components will be conducted pursuant to requirements imposed by the Ohio Environmental Protection Agency (Ohio EPA), consistent with the terms of the July 18, 1986 DOE and U.S. Environmental Protection Agency (USEPA) Federal Facilities Compliance Agreement, as amended on June 29, 1990, and September 20, 1991 (hereinafter referred to as Consent Agreements).

A copy of this CPID, along with any subsequent revisions, will be maintained at the site.

1.2 Background

The FEMP is a DOE owned facility located on 1,050 acres in a rural area approximately 18 miles northwest of Cincinnati, Ohio. The property is located in Ohio, primarily in Hamilton County with the northern section extending into Butler County. The villages of Fernald, New Baltimore, Ross, New Haven, and Shandon are located within a 5 mile radius of the plant (Figure 1).

The FEMP was formerly known as the Feed Materials Production Center (FMPC), and was operated for the purpose of producing metallic uranium fuel elements, target cores, and other uranium products in support of the U.S. defense program. The former production areas were limited to an approximate 136 acre tract near the center of the site. The facility was in operation at this site from the early 1950s until production ceased in July 1989. In February 1991, the DOE formally notified the U. S. Congress that production missions at the FEMP had ceased and the facility was being closed.

The Fernald Environmental Management Project (FEMP) was designated a Superfund site and placed on the National Priorities List (NPL) in November 1989. A Consent Agreement was negotiated between DOE and USEPA in April 1990 to amend the provisions of the July 1986 Federal Facilities Compliance Agreement (FFCA). The amendments were necessary to meet the requirements of Section 120 of CERCLA applicable to NPL facilities. The Consent Agreement was further amended in September 1991. A key element of the FFCA and the subsequent Consent Agreements includes grouping the site into five operable units (OUs) for characterization and remediation. The NAR System Components are located in OU3 which encompasses the former production area and production-associated facilities and equipment.

1.3 Regulatory Impacts and Exemptions

RCRA closure activities at the FEMP are impacted by other regulatory requirements and negotiated legal agreements between the DOE and other Federal and State agencies. The following sections discuss regulatory and legal constraints applicable to the FEMP that may effect the conduct of RCRA closure activities and exemptions from RCRA requirements.

1.3.1 Radioactive Mixed and RCRA Wastes

Most FEMP wastes with a hazardous waste component or characteristic are handled on-site as radioactive mixed and hazardous wastes. The radioactive portion of mixed waste is not regulated under RCRA. Determination of the radionuclide component of most material on-site is based upon analysis to assay the uranium content of the material. For some materials, assay values are based on prior sampling of the same or similar materials, or upon process knowledge. In cases where assay values have not been established, the FEMP considers materials generated in the uranium processing area to be radioactively contaminated until proven otherwise. This determination is based upon process knowledge, experience in uranium production operations, and the fact that de minimis concentrations or below-regulatory-concern (BRC) levels for radionuclides have not been established for the residues or wastes in question.

DOE will inform Ohio EPA of the results of radiological sample analyses obtained during the closure of the NAR System Components. Sampling and analyses to support closure activities will be performed in accordance with the NAR System Components Sampling and Analysis Plan (SAP) provided in Attachment A, and with existing FEMP Standard Operating Procedures (SOPs) for management of activities and materials involving radiation hazards.

Recognizing the dual nature of these wastes, the FEMP stores mixed (hazardous combined with radioactive) wastes in accordance with RCRA

regulations as well as DOE orders concerning low-level radioactive waste. DOE orders are binding regulatory requirements issued by the DOE that govern the conduct of operations at DOE sites. DOE orders apply both to DOE personnel and contractors employed at DOE sites. Based on the current lack of national capacity for storage, treatment, and disposal, these wastes are being stored pending the availability of acceptable mixed waste storage, treatment or disposal facilities.

1.3.2 Integration of CERCLA Remedial and Removal Actions with RCRA Closures

In 1986, the DOE initiated the ongoing Remedial Investigation/Feasibility Study (RI/FS) to evaluate and determine remediation requirements pursuant to CERCLA. Consistent with the scope of National Contingency Plan (NCP) and the Amended Consent Agreement, all remediation activities and any resulting changes to facility schedules must be coordinated and integrated with the RI/FS and CERCLA removal and remedial response actions. Additionally, all remediation activities, including RCRA Closure activities, must be consistent with the Final ROD for the operable unit containing the HWMU.

In accordance with 40 CFR 300.400(g), CERCLA response actions must identify other Applicable or Relevant and Appropriate Requirements (ARARs), unless justifiably waived, including Ohio EPA and USEPA requirements for HWMU closures. Pursuant to the Amended Consent Agreement, the FEMP management will:

- Characterize chemical and radiological contamination at the FEMP and establish site cleanup objectives;

- Conduct necessary short-term response actions to eliminate or minimize immediate threats to human health and environment (i.e removal actions); and

- Implement any necessary long-term monitoring and surveillance of the facility and surrounding environment.

Based on the RI/FS, a proposed plan will be recommended for the CERCLA ROD for each Operable Unit. The Final ROD for each Operable Unit will specify the required final remediation or removal of contaminated media, equipment and structures.

During the RI/FS investigations, Removal Action (RA) No. 12, RA No. 20, and RA No. 17 (discussed below) have been initiated to provide immediate response actions necessary to stabilize or remove contamination for protection of human health and the environment. Removal action work plans have been prepared for review and comment by the OEPA and USEPA with final approval granted by the USEPA under CERCLA.

In addition, an interim ROD is currently being planned to expedite the demolition of equipment and structures in OU3 prior to the issuance of the Final ROD. Remedial Design/Remedial Action (RD/RA) plans will be prepared to implement the requirements of the RODs (Interim and Final) to remediate each Operable Unit.

The substantive requirements for closure of the NAR System Components will be achieved under the Interim and Final RODs for OU3 and under CERCLA Removal Action No. 12 "Safe Shutdown," Removal Action No. 20 "Stabilization of Uranyl Nitrate Inventories," and Removal Action No. 17 "Improved Storage of Soil and Debris."

RA No. 12, the Safe Shutdown Program, was created to perform the safe shutdown of all process facilities in preparation of final remediation. Safe Shutdown essentially entails the engineering, planning, and scheduling for isolation of process equipment, piping systems, and associated utilities; and removing residual and excess materials, supplies, and combustibles to appropriate disposition and approved storage locations.

Safe Shutdown management activities include: developing appropriate safety documentation (Risk Assessment, Risk Management Plan, Health & Safety Plan, Safety Assessment); preparing Training Plans and Task-Specific Lesson Plans; reviewing SOPs and updates; performing preliminary assessments for all process buildings and process equipment; evaluating the preliminary assessment; preparing Task Orders to address equipment isolation and cleanout; continuing efforts to dispose of the surplus equipment and materials; evaluating process buildings for future use or demolition; and initiating the development of engineering studies and packages to guide equipment isolation/de-energization activities.

Safe Shutdown field work activities include: isolation of process equipment; removing excess equipment and materials, supplies, and combustibles; initiating the process of removing residual materials from process equipment; and initiating decontamination efforts. All buildings are being inventoried for residual material and excess equipment. Necessary documentation is being processed to identify proper disposition of these materials.

RA No. 17 provides for the improved management of soil and debris in two phases. Phase I defines soil and debris management during the design and construction of four proposed storage facilities. Phase II addresses soil and debris management from the time the facilities are constructed until final remedial alternatives for FEMP are selected. RA No. 17 provides specific criteria for the management of soil and debris contamination and identifies options for its disposition including decontamination, disposal offsite, or storage in controlled stockpiles or an improved storage facility.

For this CPID, RA No. 17 applies to management of debris. The identification and characterization of soil contamination in the Plant 2/3 area (which encompasses the soil around the NAR System Components) is being conducted as part of the RI/FS characterizations for OU5. Attachment B contains preliminary data for media contamination at

Plant 2/3. Contamination characterizations cannot distinguish between releases of nitric acid as a RCRA waste versus de minimus process losses addressed under the RI/FS which are not regulated under RCRA. However, the NAR System Components identified in this CPID are equipped with secondary containment and a review of FEMP spill and release records indicates that there have been no spills or releases since the nitric acid residues have been regulated under RCRA. The NAR System Components were identified as HWMU No. 10 strictly on the basis of exceeding 90 day storage (under OAC 3745-51-04(C) and 40 CFR 261.4(c)) and not for spills or releases. As a result, soil contamination and management issues are addressed under the CERCLA investigations for OU5 and are not addressed separately as a RCRA closure issue in this CPID.

RA No. 20, "Stabilization of Uranyl Nitrate Inventories" is an ongoing action involving the processing of uranyl nitrate material. Specific information regarding the processing of uranyl nitrate under RA No. 20 and the sequence of CERCLA response activities to complete closure is provided in Section 3.0 of this CPID.

1.3.3 Financial and Liability Exemptions

The FEMP is a federally owned facility. According to OAC 3745-66-40 C and 40 CFR 265.140(c), the Federal Government is exempt from the financial requirements of OAC 3745-66-40 through OAC 3745-66-48 and 40 CFR 265 Subpart H.

2.0 SUMMARY OF HWMU INFORMATION

2.1 Waste Management Unit Description

The Nitric Acid Recovery (NAR) System was used to collect nitric acid and nitrogen oxides (NOX) generated from the acid extraction of uranium from ores and residues in Plant 2/3. The NAR System Components operated from 1951 until the system was shut down in July 1989. The NAR System Components recovered nitric acid for reuse in Plant 2/3 production and also controlled NOX emissions from the Plant 2/3 production process. Plant 2/3 is bounded on the north side by 2nd Street, on the east by B Street, on the west by A Street, and on the south by 101st Street.

Under OAC 3745-51-04(C) and 40 CFR 261.4(c), the recovered nitric acid was stored for more than 90 days after shutdown in July 1989 after it became subject to RCRA solid waste regulations. Because it exhibits the characteristic of corrosivity as defined in OAC 3745-51-22(A)(1) and 40 CFR 261.22(a)(1), the recovered nitric acid residues have been declared a corrosive hazardous waste (EPA hazardous waste number D002). In June 1991, the NAR System Components used to store recovered nitric acid were identified as HWMU No. 10 (see Figure 2).

The NAR System Components occupy an area of approximately 13,262 ft^2. The secondary containment area for the NAR System Components inside Plant 2/3 Denitration Area is provided by the concrete floor (6 in. thick) and building walls. Tank F1-24 is located outside and adjacent to Plant 2/3 and has a secondary containment structure. It is a tar-sealed, concrete pad surrounded by a 3 ft. concrete wall. HWMU No. 10 boundaries were defined to encompass the areas where nitric acid was being stored in various tanks or weir boxes since cessation of operations in 1989. Figure 3 is a plan layout of the unit. The HWMU boundaries are delineated at the Denitration area in Plant 2/3 and the secondary containment area south of Plant 2/3 by yellow plastic chains and warning signs.

The NAR System Components were sampled in November 1992 and inspected on May 21, 1993. They were found to be in good condition and no deficiencies were noted. No spills or releases of nitric acid wastes have been reported.

In the NAR System Components, NOX was converted to nitric acid when the exhaust gases were scrubbed with a countercurrent water flow. Recovered nitric acid was stored in bulk tanks adjacent to Plant 2/3 Digestion Area. The nitric acid/NOX fumes were generated by three principal production operations in Plant 2/3: uranium dissolution, metals digestion, and denitration. The following provides a brief description of the three principal operations in Plant 2/3 that generated the NOX and nitric acid fumes which were recovered in the NAR System Components:

1) The metal dissolver process, located on the north side of Plant 2/3 (Building 2D) was utilized for the dissolution of uranium oxide, scrap uranium, and iron. Once dissolved, the material was introduced as feed stock into Plant 2/3. At the present time there is no nitric acid (waste) stored in this area.

2) The digestion process, located on the west end of Plant 2/3 (Building 2A) produced uranyl nitrate solution for purification in the extraction system. During the reaction of nitric acid and uranium feed stock, NOX vapors were emitted. The NAR System Components removed the vapors from the digestion vessel by inducing a vacuum on an eight inch diameter vent pipe connected to the vessel.

3) The denitration process, located on the east side of Plant 2/3 (Building 2A) converted uranyl nitrate solutions to uranium trioxide or orange oxide (UO_3). The conversion was accomplished by removing nitric acid, NOX vapors and water

from solid or molten uranyl nitrate during thermal decomposition.

The original HWMU determination identified nine components within the NAR System that were suspected to contain RCRA regulated residues of nitric acid. The HWMU, identified as the NAR System Components, includes the following nine tanks and vessels (see Figure 3):

- two storage tanks (Tanks F1-24 and F3E-220),
- two liquid cooling tanks (Tanks E3E-210 and E3E-211),
- four weir boxes (Tanks F3E-207, F3E-213, F3E-215, F3E-218, and
- a venturi scrubber (Tank G2E-207).

Of the nine components, only Tank F1-24 is located outside, in a secondary containment area. The remaining components are located inside Plant 2/3. Tank F1-24 is an above ground tank located in the NAR tank storage area, at the southwest end of Plant 2/3. The tank was used to store the recovered nitric acid for reuse in the Plant 2/3 extraction process. This cylindrical, stainless steel tank has a capacity of 30,500 gallons and measures approximately 16 ft. in diameter and 18 ft. high. The tank sits on a flat, tar-sealed, concrete pad surrounded by a 3 ft. concrete wall. Two other storage tanks are also located in this secondary containment area. Ancillary equipment includes vacuum pumps, associated piping, valves, a high level sensor with an alarm, and an overflow cascade pipe. Inventory records indicate that Tank F1-24 contains approximately 26,707 gallons of 6-normal (N) nitric acid. Rain water that accumulates in this secondary containment area is transferred to the Refinery Sump where it is tested and treated to remove uranium contamination prior to discharge through the FEMP wastewater treatment system (WWTS).

Tank F3E-220 is located on the first floor level in the southwest end of the Denitration Area inside Plant 2/3. The tank was used for storage of liquids from the venturi scrubber (Tank G3E-207). Tank F3E-220 is a cylindrical, stainless steel tank measuring approximately 6 ft. in

diameter and 17.5 ft. long. Ancillary equipment includes pumps and piping. Inventory records indicate that scrubber tank F3E-220 contains 2,036 gallons of reclaimed nitric acid.

Two Liquid Coolers, E3E-210 and E3E-211, are located on the first floor level in the northwest end of the Denitration Area inside Plant 2/3. The Liquid Coolers were used to cool the nitric acid from the scrubber. E3E-210 and E3E-211 are cylindrical, stainless steel tanks measuring approximately 1.5 ft. in diameter by 12 ft. high. Ancillary equipment includes pumps and piping. Liquid Coolers E3E-210 and E3E-211 are suspected to contain nitric acid residues. There are no inventory records but the quantity is estimated at 45 gallons for each of the Liquid Coolers. The capacity of the Liquid Coolers is 158 gallons.

Weir Boxes F3E-207, F3E-213, F3E-215, and F3E-218 are mounted above the Denitration Tanks on the second floor level on the north side of the Denitration Area inside Plant 2/3. Ancillary equipment includes the piping. These units are made of steel and measure approximately 3 ft. by 4 ft. by 0.67 ft. During sampling of the NAR System Components in November 1992, Weir Boxes F3E-207, F3E-215, and F3E-218 were found to be empty. There are no inventory records and the maximum capacity of each Weir Box is 60 gallons. It has been assumed that the current volume of Weir Box F3E-213 is the maximum capacity - 60 gallons.

The Venturi Scrubber G3E-207 is mounted above the Weir Boxes on the second floor level in the north side of the Denitration Area inside Plant 2/3. This scrubber is a 7 ft. tall stainless steel vessel that measures approximately 1.5 ft. in diameter at the top and 1 ft. in diameter at the bottom. The diameter of the scrubber varies between the top and bottom and does not decrease linearly. Ancillary equipment includes the associated piping. When in use, vapors passed through the Venturi Scrubber where the scrubber liquid removed water vapor, dust, and NOX vapors. It was assumed that this unit may contain nitric acid. Based on further investigation and discussions with previous production operators,

it has been found that the scrubber was not designed to retain the scrubber liquids. As a result, the capacity of the Venturi Scrubber is 0 gallons.

2.2 Waste Inventory

Since production ceased and the NAR System Components was shut down, an estimated 28,893 gallons of 6-normal (N) nitric acid has been stored in the various tanks and associated equipment. Table 1 lists the estimated maximum amounts of nitric acid stored in the NAR System Components.

2.3 Current Use

At the present time, several components in this HWMU (see Section 2.1) are being used to store nitric acid residues that have been identified as RCRA hazardous wastes (EPA waste number D002). The RCRA status of AEA compounds that exhibit a RCRA characteristic is under discussion between DOE-HQ and USEPA. As discussed in this CPID, after the NAR System Components are emptied, decontaminated, and dismantled, the HWMU will be closed as part of the CERCLA response actions implemented to remediate the Plant 2/3 Area (see Section 3).

2.4 Security

As with all DOE facilities, security at the FEMP is strict. The entire FEMP processing area, including Plant 2/3, is surrounded by chain link fencing and monitored by on-site security personnel. All employees and visitors are required to enter through one of several guarded entrances into the facility. NAR System Components are located within the fenced FEMP production area and have been marked with stanchions, yellow plastic chain and warning signs to restrict unauthorized entry.

3.0 CLOSURE INFORMATION

3.1 Closure Objectives and Performance Standards

It is the intention of FEMP Management to accomplish closure of the Nitric Acid Recovery (NAR) System Components through the implementation of CERCLA removal and remedial actions required by the July 1986 USEPA/DOE Federal Facilities Compliance Agreement, as amended by the Consent Agreement in September 1991. As discussed in Section 2, the vessels used to store hazardous wastes (i.e., unused recovered nitric acid solutions) are integral components of a much larger Nitric Acid Recovery System in Plant 2/3. As a result, the decontamination and dismantling of the NAR System Components must be conducted in controlled stages. The OAC 3745-66-11 (40 CFR 265.111) closure performance standards will be accomplished through the ongoing RA No. 20, "Stabilization of Uranyl Nitrate Inventories"; RA No. 12, "Safe Shutdown"; RA No. 17, "Improved Storage of Soil and Debris"; the Interim and Final RODs for OU3; and the Final ROD for OU5. Since final closure may not be completed until after the Final OU3 ROD, the NAR System Components will continue to be managed as a HWMU until closure certification is received.

3.1.1 Clean Up Action Levels

Decontamination of the tanks, piping, and associated equipment of the NAR System Components as described in Section 2 will be evaluated based on analyses of the final rinse(s). Successful decontamination will be confirmed when the analyses of the final rinseate sample demonstrates that the concentration of metals listed in Table 2 is less than the RCRA Toxicity Characteristic Leaching Procedures (TCLP) limits as listed in OAC 3745-51-24 (parallels 40 CFR 261.24) and the pH is greater than 2 and less than 12.5.

Clean up levels and remediation of contaminated debris will be defined by the Final ROD for OU3. Clean up levels and remediation of contaminated

soil will be defined by the sitewide ROD for OU5 and is not within the scope of this CPID for the NAR System Components (see discussions in Section 1.3.2).

3.2 Closure Methodology

As this is a CERCLA removal action, permitting is not required to treat the contents of the NAR System Components. The following CERCLA response actions will be conducted to remove and remediate contamination and accomplish closure of the NAR System Components:

1) Under the Safe Shutdown RA No. 12, all hazardous wastes and hazardous waste residues will be removed from the NAR system including the hazardous waste storage tanks and ancillary equipment described in Section 2. A series of water rinses will be performed to flush the NAR System Components. Where feasible, the rinseate will be recirculated in the NAR System Components to limit the volume of rinse water used.

2) As the NAR System Components are being flushed, the rinseate will be sampled and analyzed for pH to evaluate decontamination. After the field pH measurements are within the range of 6.0 to 9.0, three samples of the final rinseate will be collected for laboratory analyses to verify decontamination.

3) The wastes and rinseates will be transferred from the NAR System Components into the uranyl nitrate system to supplement the nitric acid flushing of the uranyl nitrate tanks under RA No. 20. The wastewater from the uranyl nitrate flushing will be treated in the uranyl nitrate neutralization system.

4) Under the Interim and Final RODs, waste and material characterizations will be conducted to determine disposition

of the tanks and ancillary equipment from the NAR System Components. Consistent with waste minimization objectives, alternative dispositions will be evaluated and selected as listed in Section 3.2.3.

5) Characterization of structural contamination from the Plant 2/3 production process is being conducted under the OU3 RI/FS characterization work plan. If required, contaminated debris (e.g., from demolition of secondary containment structures) will be managed in accordance with RA No. 17 for Improved Management of Soil and Debris until the final clean up and remediation is determined by the CERCLA ROD for OU3.

The schedule for these CERCLA actions are established by the specific work plans in response to the DOE/USEPA Amended Consent Agreement and the proposed Interim and Final ROD schedule for OU3. Section 5 provides additional discussion concerning the schedules for the CERCLA response actions and Interim and Final RODs.

3.2.1 Removal of Wastes and Decontamination of NAR System Components

The process for removal of wastes and rinseates under RA No. 12 "Safe Shutdown" is as follows:

1) The nitric acid residues will be transferred to the uranyl nitrate storage tanks to provide an acid rinse for completion of RA No. 20 "Stabilization of Uranyl Nitrate Inventories."

2) After the nitric acid wastes have been transferred from the NAR System Components, a series of water rinses will be performed to dissolve solid residues and flush remaining acid residues from the interior surfaces of the system components. Where feasible, the rinseate will be re-circulated through the system.

3) If it is determined that decontamination of certain components within the NAR System Components cannot be achieved by rinsing, the effected components will be isolated to prevent any possible contaminant release. Dismantling of the effected NAR System Components will be specified and conducted under the Interim ROD for OU3. In the Proposed Plan currently being developed, it is anticipated that during the implementation of the Interim ROD a nominal portion of the materials generated may be decontaminated. Any NAR System Components that are not decontaminated under the Interim ROD will be stored pending determination of decontamination or alternate disposition under the Final ROD for OU3.

4) As the NAR System Components are decontaminated, samples of the rinseate will be collected to evaluate and verify decontamination. If the analyses of the rinseate identifies hazardous constituents and characteristics in excess of the limits listed in Table 2, up to two additional flushes will be conducted. Further discussions concerning rinseate sampling are provided in Section 3.4.

5) Rinseate will be transferred into empty uranyl nitrate tanks and mixed with the nitric acid in RA No. 20 to flush the uranyl nitrate treatment system.

6) The wastes and rinseate from the NAR System Components along with any residues flushed from the uranyl nitrate tanks will be processed through the uranyl nitrate treatment system for acid neutralization, precipitation, and filtration of solids (see treatment process discussion below).

3.2.2 Use and Treatment of Nitric Acid Wastes and Rinseate

RA No. 20 provides for blending and treatment of uranium and acid mixtures currently being stored in the uranyl nitrate storage tanks. The treatment process neutralizes the blended mixtures with magnesium hydroxide and yields a precipitate of uranium and metal salts. The precipitate is filtered out, drummed, tested and characterized. Preliminary testing of the uranyl nitrate treatment process indicated that the precipitate does not exceed the TCLP metals limits for hazardous waste (see Attachment C). The aqueous portion from the precipitate slurry filtration is characterized and either discharged to the FEMP WWTS or reprocessed though the uranyl nitrate treatment system. The following summarizes the process being used in the uranyl nitrate treatment system for treatment of acids and rinseate from both the uranyl nitrate tanks and the NAR System Components:

1) The uranyl nitrate solution will be blended in a series of "batches." Each batch will be designed to mix solutions from two or more tanks that will satisfy the enrichment criteria of < 1 % U^{235} and concentration standards of < 100 g/L of uranium.

2) Each solution is transferred from its storage tank to the blending tank and mixed to dissolve all settled material.

3) After the uranyl nitrate storage tanks are emptied, they will be flushed with nitric acid or rinseate from the NAR System Components to assure removal of all uranium-containing solution and tank bottom sediments.

4) Blending of uranyl nitrate solutions will be done in two (2) blend tanks (F1-25 & F1-26) located in the Plant 2/3 Digestion Area. The contents of the blend tanks will be thoroughly mixed.

NOTE: For operator safety, a plexiglass cover has been added to the blend tanks to control of releases of NOX (nitrogen oxides) gas generated during the blending operation. To minimize NOX releases in the work area, a negative pressure will be maintained on the south blend tank by using a fan exhaust on the vent pipe. As an additional safety measure, two general area exhaust fans will be run in the Digestion Area during blending operations.

5) Each batch will be transferred to a receiving tank in the Refinery Sump where water will be added to dilute the blended uranyl nitrate solution. The uranyl nitrate will be diluted to lower the concentration of uranium and make the precipitate more filterable.

6) After dilution, the batch will be transferred to a mixing tank in the Refinery Sump Area and a magnesium hydroxide slurry will be added for neutralization and precipitation. A circulating loop with another mixing tank will be used, as needed.

Note: The operational limits for the uranyl nitrate treatment system include attaining a concentration of extractable chromium and barium in the slurry that is below regulatory levels for TCLP constituents from 40 CFR 261.24 and OAC 3475-51-24 and adjusting the pH to 6.0 - 9.0 prior to discharge into the FEMP WWTS.

7) The precipitate slurry will be transferred into one of two (2) receiving tanks in Plant 8 from which it will be transferred to the east or west Eimco™ filter and filtered. For waste minimization, some of the filtrate from the Eimco™ filter is returned to the receiving tank in the Refinery Sump to use in diluting the next batch of uranyl nitrate to be processed.

8) The filter cake will be collected into drums, sampled and stored in a controlled holding area or on the Plant 1 Pad pending characterization. Preliminary testing of the uranyl nitrate treatment process indicated that the metals of concern (i.e. uranium, barium, chromium) precipitate out of the mixture in a non-leachable form. Analyses show that the filter cake does not exceed the TCLP regulatory levels for these metals. Attachment C contains the results of these preliminary tests. Present plans include a drying step for the filter cake in the Rotary Kiln. It is anticipated that the filter cake, after drying, will be disposed of at the Nevada Testing Site (NTS) as low level radioactive waste.

9) After passing through the Eimco™ filters, wastewater from the uranyl nitrate treatment system will be sampled and analyzed prior to discharge to the FEMP WWTS. If the wastewater does not meet the limits required to meet NPDES permit restrictions, it will be returned to the beginning of the uranyl nitrate treatment system for additional processing.

3.2.3 Dismantling and Disposition of NAR System Components

The NAR System Components discussed in this section include those items made of steel or stainless steel (i.e piping, tanks, pumps, ancillary equipment) in the NAR System Components that have been rinsed per the procedures described in Section 3.2.1. As part of the Interim ROD activity for OU3, these items will be removed from the system, placed in interim storage pending evaluation for disposition under the Final ROD for OU3. Currently, options for disposition include:

- reuse on-site,
- transfer for use at other government facilities,
- sale as excess equipment or scrap,
- recycle as scrap metal,

- store pending development of new treatment or disposal capabilities,
- treat metal per 57 FR 37194 "Land Disposal Restrictions for Newly Listed Wastes and Hazardous Debris," and/or for free release per DOE Order 5400.5, or
- discard as low level radioactive waste.

The NAR System Components will be dismantled and removed following the requirements of the Interim ROD for OU3. A proposed plan is being developed and will be submitted to the USEPA and OEPA. Once comments from both USEPA and OEPA have been resolved and final approval of the CERCLA Interim ROD is granted by the USEPA, a Remedial Design/Remedial Action (RD/RA) Work Plan will be developed for the implementation of the Interim ROD. Following regulatory approval of the RD/RA Work Plan, the FEMP will proceed with the development of the Task-Specific plans, specifications and procurement documents describing the requirements and schedules for executing the interim action.

Remedial design documents will also address the requirements for management of equipment and other Plant 2/3 demolition materials, wastes and debris until final disposition can be determined as a function of the Final ROD for OU3. Based on national capacity limitations for radioactive mixed and hazardous wastes, it is anticipated that much of the dismantled equipment will have to be managed on-site until alternative treatment and disposal options are determined under the Final ROD for OU3. Management of contaminated debris will follow the requirements of the RA No. 17 Work Plan for Improved Storage of Soil and Debris.

3.2.4 Containment Structure Removal and Remediation

The assessment of structural contamination from the production process is currently being addressed by the OU3 RI/FS characterization work plan. FEMP site records indicate that no spills or releases have occurred from the NAR System Components during storage of hazardous wastes. Remediation

of contaminated soil will be defined by the ROD for OU5 and is not within the scope of this CPID for the NAR System Components (see discussions in Section 1.3.2).

Under the Interim ROD, all above grade structures in Plant 2/3 will be decontaminated and/or dismantled. The remaining structures at and below grade will be field surveyed for radiological contamination. These surveys will be used to identify contaminated areas within Plant 2/3 (including the NAR System Components containment areas). Since the wastes and residues in the NAR System Components were radioactively contaminated in the production process, radiological screening should also identify suspect areas for chemical contamination. If hot spots of radiological and chemical contamination are identified by characterization data and the level of fixed contamination is greater than 100 times the levels specified in the DOE Radiological Control Manual, the area will be roped off to prevent unauthorized entry and designated a "High Contamination Area". The remediation and disposition of these contaminated areas will be defined in the Final ROD for OU3.

3.3 Decontamination of Equipment Used During Closure

Only clean equipment will be used for sampling and decontamination. The FEMP CRU3 Health and Safety Plan has identified contamination area compounds to prevent the spread of removable surface contamination to other areas of the FEMP. The equipment being used to rinse and flush the NAR System Components will be decontaminated in accordance with FEMP site procedures as referenced by the Safe Shutdown Task-Specific work plans. Decontamination of sampling equipment is addressed in the SAP (Attachment A).

Decontamination wash and rinseate will be collected and used as part of the acid and water rinse to flush the uranyl nitrate tanks under RA No. 20. Other solid wastes (e.g., personnel protective equipment, plastic

sheeting, etc.) will be characterized and placed, as appropriate, into containers and managed as described in Section 3.5.

3.4 Sampling and Analysis

All sampling and analyses for hazardous waste constituents will be conducted following SAP procedures (Attachment A). The following samples will be collected:

- During the process of flushing the NAR System Components, samples of the rinseate from the discharge line(s) from the NAR System Components will be collected to evaluate effectiveness of cleaning being conducted by conducting field pH measurements.

- Three samples of the final rinseate(s) will be collected and submitted for laboratory analyses of the target analytes listed in Table 2.

- Soil screening samples will be collected adjacent to the secondary containment area of exterior tank F1-24 as specified in Section 2.3 of the SAP (Attachment A).

- Sampling equipment decontamination rinseates will be collected as specified in Section 3.2.1 and the SAP (Attachment A).

- Quality Assurance and Quality Control (QA/QC) samples will be collected as specified in the SAP (Attachment A).

3.5 Management of Waste Generated During Closure

Wastes generated by this closure will be evaluated in accordance with the approved FEMP Waste Analysis and Waste Determination Plans. Wastes will

be placed in appropriate containers, properly labeled, and managed as follows:

- Wastes that are determined to be RCRA hazardous wastes will be stored on-site in a RCRA storage location identified in the March 1993 Part B Permit Application, or subsequent revisions, until an acceptable treatment or disposal option is identified.

- Radioactive non-hazardous wastes will be managed in accordance with applicable DOE orders.

- Non-hazardous, non-radioactive solid wastes will be sent to a permitted solid waste disposal, recycling or treatment facility.

The analyses of samples collected from wash and rinse waters for waste characterization and determination will be considered in characterizing other decontamination wastes (e.g. disposable clothing, discarded contaminated cleaning equipment, plastic sheeting, sorbent materials, etc.)

3.6 Health and Safety

Prior to conducting any field activities at the FEMP, the existing health and safety assessment must be revised to identify project specific hazards and conditions. Based on the findings of the health and safety assessment, the Project/Task Specific Health and Safety Plan will be amended to specify required health and safety procedures including: personnel protection equipment (PPE), entry and exit requirements, and personnel and equipment decontamination procedures. Guidelines for the preparation of CRU3 Health and Safety Plan are included in Attachment D.

FEMP Radiological Control will perform contamination, radiation, and air monitoring surveys to determine radiation protection requirements. FEMP Industrial Health and Hygiene will perform surveys and sampling for chemical and biological hazards, including asbestos. Additional screening, including on-site laboratory analyses for gross alpha/beta activity levels, may be required to further categorize radiation levels and hazards before the samples can be shipped to an off-site laboratory. Radiation survey procedures and requirements for shipping samples to off-site laboratories for analysis will be conducted in accordance with standard FEMP procedures.

4.0 CLOSURE CERTIFICATION

Pursuant to OAC 3745-66-15 (40 CFR 265.115), upon closure of a HWMU, the owner or operator and a qualified, independent registered professional engineer (PE) licensed in Ohio must certify that the HWMU was closed in accordance with an approved written closure plan. After completion of the activities identified in the approved CPID, the FEMP has agreed to provide certification of those CERCLA response actions taken to accomplish closure of the NAR System Components.

4.1 RCRA Closure Standards for Clean Determinations

Efforts to decontaminate the tanks, piping, and associated equipment of the NAR System Components, will be evaluated based on analyses of final rinse samples. Successful decontamination will be confirmed when the analyses of the final rinseate sample demonstrates that the concentration of metals listed in Table 2 is less than the RCRA TCLP limits as listed in OAC 3745-51-24 (parallels 40 CFR 261.24) and that the pH is greater than 2 and less than 12.5.

4.2 Certification Inspections

Certification inspections shall be conducted by a qualified, independent registered professional engineer licensed in Ohio or his/her designated representatives to ensure that the CERCLA response actions to achieve closure are conducted consistent with the discussions in this CPID. Representatives of the DOE and FERMCO shall also conduct inspections during the performance of response actions. The major emphasis of the closure inspection will be:

- To ensure that the sample collection techniques described in Section 3.0 are used,

- To ensure that the structures from the NAR System Components, including the closed loop system with designated tanks, pumps, valves,and piping, are properly cleaned and decontaminated, and

- All nitric acid wastes and rinseate from the NAR System Components will be discharged to the uranyl nitrate treatment system and tested prior to discharge to the FEMP WWTS. Testing will be conducted to ensure compliance with the FEMP NPDES permit and area water quality criteria. Water that cannot be discharged to the FEMP WWTS will be reprocessed in the uranyl nitrate treatment system.

4.3 Certification Documents

Actions taken in accordance with the approved CPID for HWMUs must be certified by both the owner or operator and a qualified, independent registered PE licensed in Ohio. The FEMP has agreed to provide this certification. The certification provided by the FEMP will include the following:

(1) Certification Statement (see Section 4.4);

(2) The approved plan or reference to this plan;

(3) Description of volume of waste removed;

(4) All correspondence between the FEMP and OEPA regarding closure activity after OEPA approval;

(5) Details of sampling and analysis methods (including, copies of shipping records, and chain of custody forms used for sample handling and tracking);

(6) Copies of Laboratory analyses reports;

(7) Narrative describing all activities during closure (this narrative may be presented in the form of a daily log of activities or field notes recorded by the owner or operator); and

(8) Signatures of the qualified, independent registered professional engineer and the owner or operator.

4.4 Statement of Certification

The FEMP will submit a Certification of RCRA Closure within 60 days after the Nitric Acid Recovery System Components closure is complete. The Certification will comply with the provisions of O.A.C. 3745-66-15 and 40 C.F.R. § 265.115. The Certification will state the following:

"Based on information made available to me, I....., (Title)...., do hereby certify that to the best of my knowledge, the Nitric Acid Recovery System Components have been closed in accordance with the closure plan information and data for the Nitric Acid Recovery System Components, as approved by the Ohio EPA on....(date)."

5.0 SCHEDULE

OAC 3745-66-13(A) and (B) requires removal of the nitric acids wastes within 90 days and completion of closure actions within 180 days after the approval of a closure plan. However, this schedule is neither a practical nor desirable approach for the closure of the NAR System Components for the following reasons:

1) Because there is a lack of national capacity for management of radioactive mixed and hazardous wastes, there is no existing off-site capacity for treatment and disposal of the uranyl nitrate wastes located in the Uranyl Nitrate Tank Areas and the nitric acid wastes located in the NAR System Components in Plant 2/3.

2) Removal of the uranyl nitrate and nitric acid wastes for on-site storage would overload the limited capacity for on-site storage of radioactive mixed and hazardous wastes.

3) An on-site treatment capability has been developed under RA No. 20 "Stabilization of Uranyl Nitrate Inventories" for treatment of the uranyl nitrate residues in various storage tanks within the Plant 2/3 area. The nitric acid wastes and rinseate from the NAR System Components will be used to flush the emptied uranyl nitrate tanks.

4) Using the nitric acid to flush the uranyl nitrate system provides the necessary treatment of the nitric acid wastes to reduce the hazardous nature of the wastes to levels below regulatory concern. Based on preliminary testing of the uranyl nitrate treatment system, the filtered aqueous wastes will be acceptable for discharge to the FEMP WWTS. The available data (Attachment C) also indicates that the precipitate can be processed through a filter press and dried

to generate a non-hazardous filter cake that can be disposed of as a low level radioactive waste at the Nevada Testing Site (NTS).

5) The tanks containing nitric acid residues for which the NAR System Components were declared a HWMU are an integral part of a complex system used during production for recovery of nitric acid and control of process emissions. The safest and most practical means for decontamination and dismantling of the NAR System Components requires a systematic flushing of the piping and equipment to dissolve solid residues and flush the nitric acid from the system. Therefore, until the NAR System Components flush is completed, the NAR System Components must remain in place for collection and management of the rinseate. The FEMP will continue to manage the NAR System Components as a HWMU until closure certification is received.

6) Based on inspections of the NAR System Components, there is no reason to expect that the nitric acid residues cannot be safely stored in the tanks until needed for flushing of the emptied uranyl nitrate storage tanks. The extra handling and movement required to remove and repackage nitric acid waste is eliminated by continued storage in-place. This effectively minimizes the threat to human health and the environment from accidental spills and releases.

7) Consolidation of work activities under the interim ROD for cleaning and dismantling of equipment and structures in the Plant 2/3 area provides a substantial savings in time, manpower and costs. This will also increase the efficient use of the available resources and facilitate the primary objective to complete clean up and remediation of the FEMP.

This CPID identifies how ongoing and planned CERCLA response actions for removal and remediation of contamination will accomplish the intent of closure of the NAR System Components. The schedule for the CERCLA response actions that will accomplish this objective is established under the Amended Consent Agreement between the USEPA and DOE. Table 3 lists current schedule/status for implementation of these CERCLA response actions.

In accordance with OAC 3745-66-13(A)(1) and (2), the FEMP is requesting that the Director of the OEPA allow the FEMP the time necessary to complete the CERCLA response actions discussed in this CPID. The actions outlined in this CPID will, by necessity, take longer than 180 days to complete. Until all nitric acid residues are removed from the NAR System Components, the FEMP will continue to maintain HWMU inspections and conduct the activities required for emergency and contingency planning as provided through the FEMP Spill Prevention Control and Countermeasure Plan. As they are developed, response action work plans, reports of sampling and analytical data, and documentation of the CERCLA response actions will be provided to the OEPA for review and comment. In addition, the OEPA will be notified at least five (5) business days in advance of significant activities that will accomplish RCRA closure objectives. Significant activities include removal of nitric acid residues, conducting decontamination rinses, and collection of rinse samples for decontamination verification of the NAR System Components identified in Section 2.

TABLE 1: HAZARDOUS WASTE STORED IN THE NAR SYSTEM COMPONENTS

Vessel Identification	Vessel Capacity (gallons)	Current Estimated Volume (gallons)
F1-24	30,500	26,707
F3E-220	3,700	2,036
E3E-210	158	45
E3E-211	158	45
F3E-207	60	0
F3E-213	60	60
F3E-215	60	0
F3E-218	60	0
G3E-220	0	0
TOTALS	34,756	28,893

TABLE 2: CLEAN UP ACTION LEVELS

Targeted Hazardous Waste Constituents and Characteristics	Clean Up Action Levels [1]
TCLP Metals	TCLP Limit (mg/l)
Arsenic	5.0
Barium	100.0
Cadmium	1.0
Chromium	5.0
Lead	5.0
Mercury	0.2
Selenium	1.0
Silver	5.0
RCRA Characteristic: Corrosivity	pH is $\leq$ 2.0 or pH is $\geq$ 12.5

[1] TCLP, SW-846 Method 1311 (as defined in 40 CFR 261 Appendix II).

TABLE 3: CERCLA RESPONSE ACTION SCHEDULES AND STATUS

CERCLA RESPONSE ACTION	CURRENT STATUS/SCHEDULE
Removal Action No. 20 "Stabilization of Uranyl Nitrate Inventories"	Currently on hold as of May 1993 for investigation of an incident indirectly involving the Uranyl Nitrate Tank System. Will advise agencies by July 30, 1993 of this removal's revised completion date.
Removal Action No. 12 "Safe Shutdown"	Safe Shutdown plans to begin work on the NAR system in June of 1994, pending completion of the thorium nitrate neutralization.
Removal Action No. 17 "Improved Management of Soil and Debris"	Approved by both OEPA and USEPA in December 1992. Procedure is in-place and will be used for this CPID.
Operable Unit 3 Interim Record of Decision	Estimated date of Draft Proposed Plan to OEPA and USEPA August 1993. Estimated date of Draft Interim ROD to OEPA and USEPA September 1994.
Operable Unit 5 Final Record of Decision	Proposed draft ROD is due OEPA and USEPA July 3, 1995.
Operable Unit 3 Final Record of Decision	Proposed draft ROD is due OEPA and USEPA May 2, 1997.

5200

36

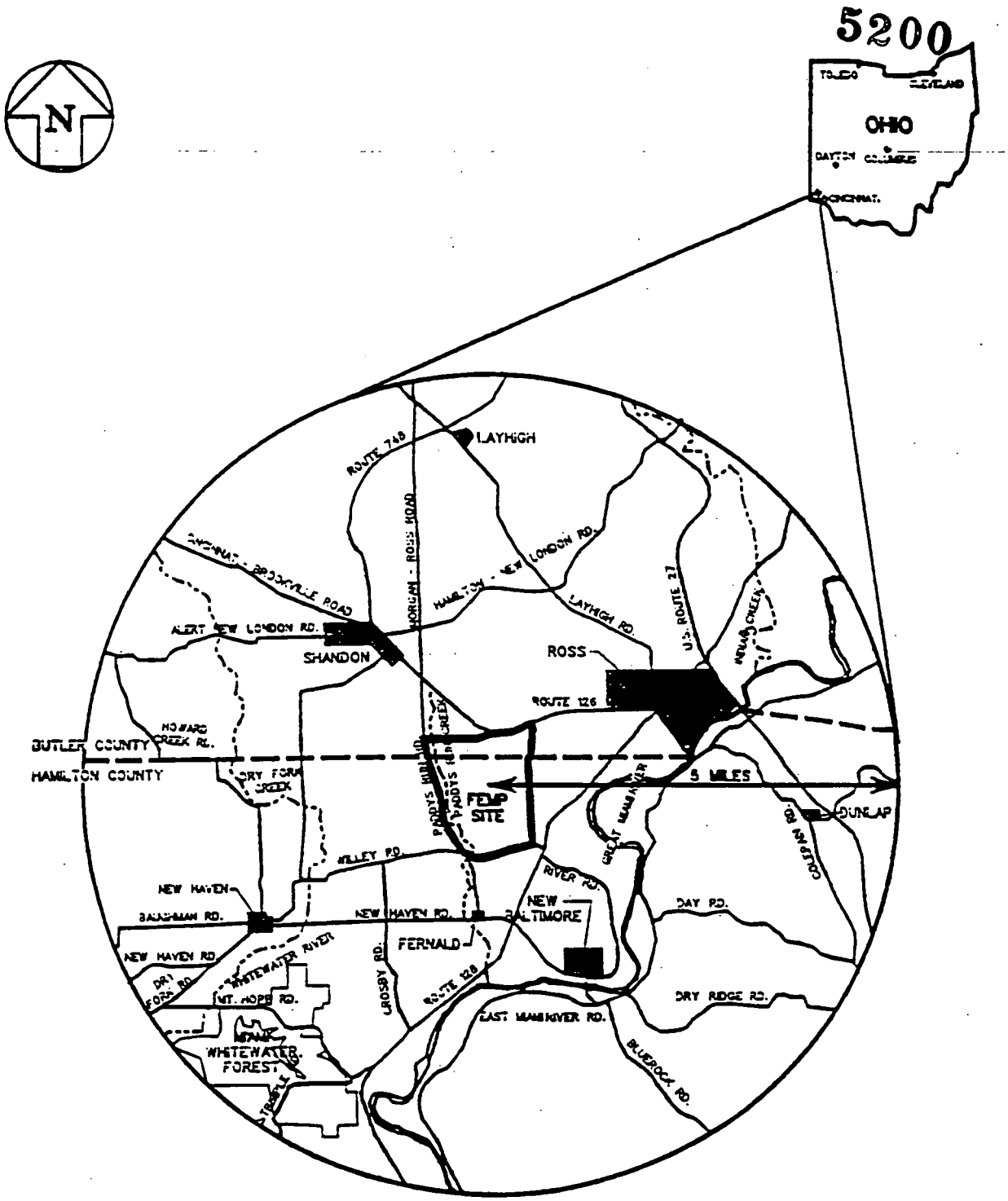

1 ½ 0 1 2 3
SCALE IN MILES

Figure 1

FEMP AND VICINITY MAP

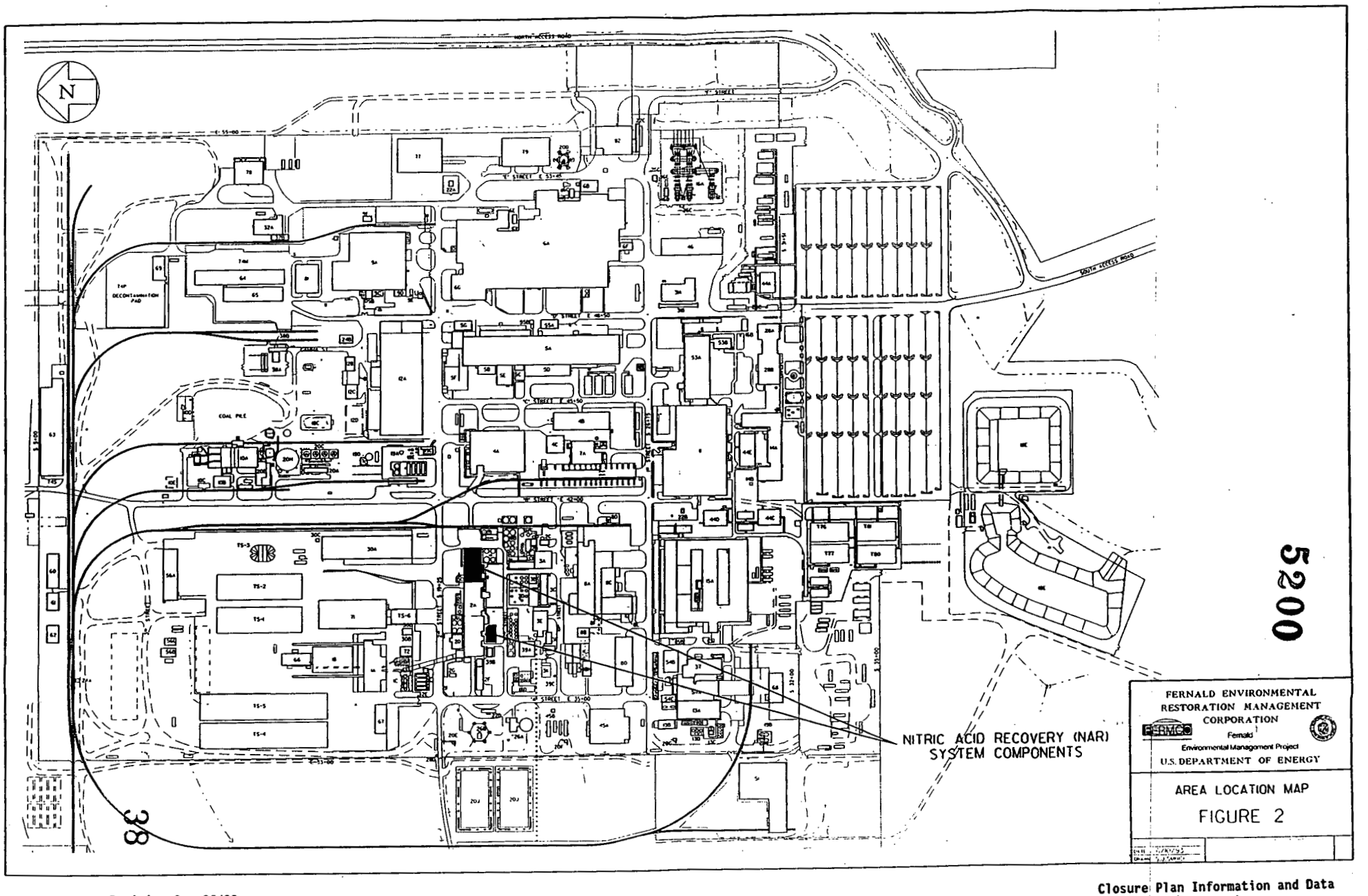
NITRIC ACID RECOVERY (NAR)
SYSTEM COMPONENTS
FERNALD ENVIRONMENTAL
RESTORATION MANAGEMENT
CORPORATION
Fernald
Environmental Management Project
U.S. DEPARTMENT OF ENERGY
AREA LOCATION MAP
FIGURE 2
5200
38

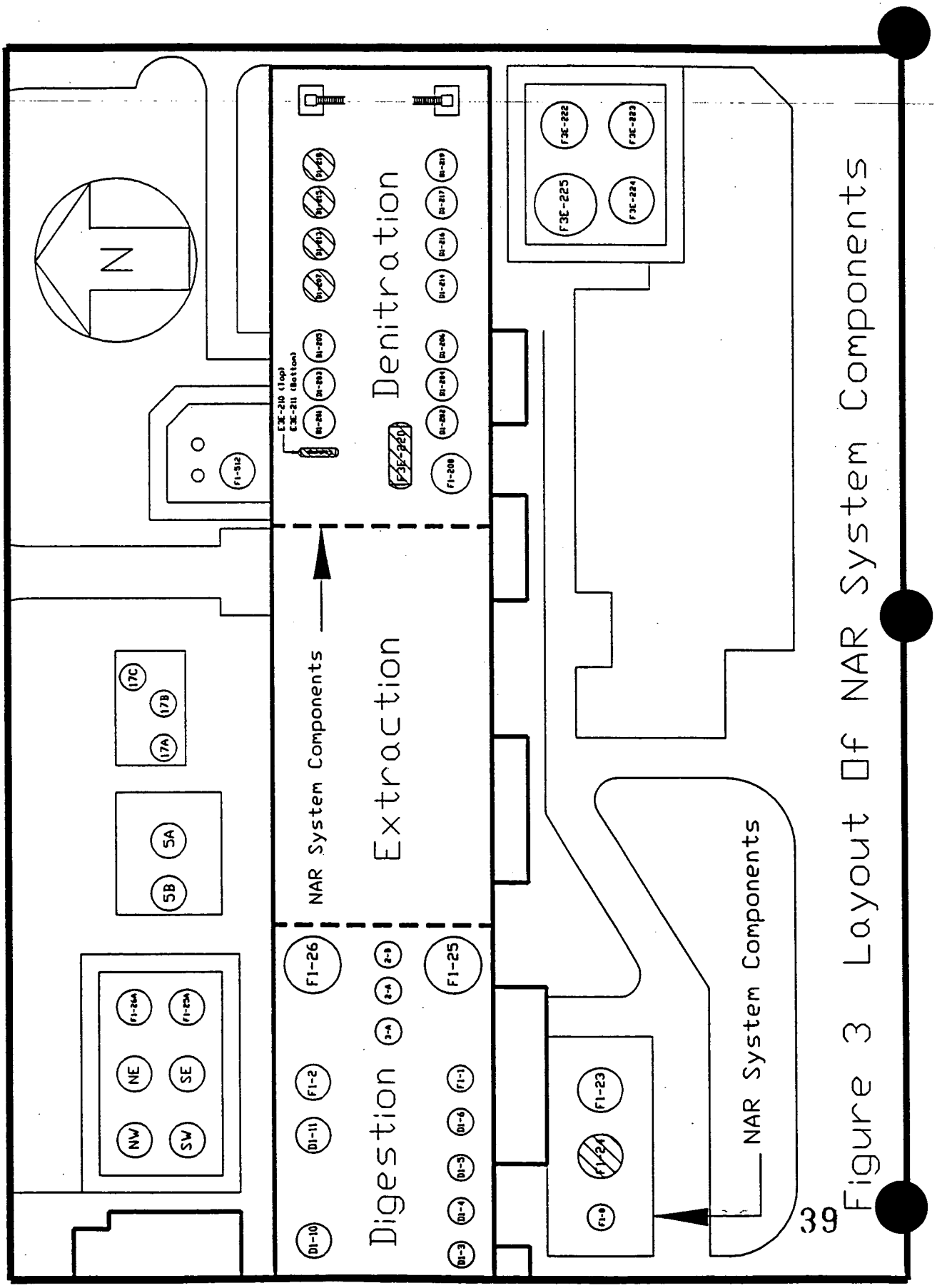

Figure 3 Layout Of NAR System Components

-5200

ATTACHMENT A

SAMPLING AND ANALYSIS PLAN

FOR THE

NITRIC ACID RECOVERY SYSTEM COMPONENTS

Revision 0
June 1993

Fernald Office
U. S. Department of Energy
Fernald Environmental Management Project
7400 Willey Road
Fernald, Ohio 45030

TABLE OF CONTENTS

Section/Title	Page
1.0 INTRODUCTION	A-1
1.1 Sampling Approach	A-2
1.2 Sampling Objectives	A-2
1.3 Sample Analyses	A-3
2.0 SAMPLE COLLECTION	A-5
2.1 Sampling Equipment	A-5
2.2 Rinseate Sampling	A-5
2.3 Soil Sampling	A-6
2.3.1 Soil Sampling Locations	A-6
2.3.2 Soil Sampling Procedures	A-6
2.4 Sample Handling and Management of Sample Containers	A-8
2.5 Equipment Decontamination	A-9
2.5.1 Sampling Equipment Decontamination Supplies	A-9
2.5.2 Sampling Equipment Decontamination Procedures	A-10
2.6 Wastes Generated During Sampling and Decontamination	A-12
3.0 FIELD DOCUMENTATION AND SAMPLE HANDLING	A-13
3.1 Field Sampling Logbook	A-13
3.2 On-Site Handling/Processing Procedures	A-14
4.0 QUALITY ASSURANCE AND QUALITY CONTROL	A-15
4.1 Field QA/QC Procedures	A-16
4.2 Laboratory QA/QC Procedures	A-17
4.3 Sample Analysis Request/Chain-Of-Custody Procedures	A-18
5.0 HEALTH AND SAFETY	A-20

LIST OF TABLES

TITLE Page

TABLE A-1: TARGET CONSTITUENT/CHARACTERISTICS AND CLEANUP ACTION LEVELS A-21

LIST OF APPENDICES

TITLE Page

APPENDIX 1 : ANALYTICAL SUPPORT LEVELS A-22

1.0 INTRODUCTION

This Sampling and Analysis Plan (SAP) was prepared to support the Closure Plan Information and Data (CPID) for the Nitric Acid Recovery (NAR) System Components. The purpose of this SAP is to describe the sample collection and handling procedures, identify analyses to be conducted and specify the quality assurance/quality control procedures to characterize and verify decontamination of the NAR System Components.

Sampling to characterize contamination in and around Plant 2/3 (e.g. soil, concrete) will be conducted under the sampling and analyses plans developed for the CERCLA Remedial Investigation/Feasibility Studies (RI/FS) for OU3 and OU5. Sampling that may be required for waste characterizations will be conducted in accordance with requirements of the FEMP Waste Analyses and Waste Determination Plans.

Sampling and monitoring conducted for worker safety and health will be conducted in accordance with the requirements of the FEMP Comprehensive Environmental Safety and Health Plan.

Soil screening and rinseate sampling and analyses for the NAR System Components will follow the procedures discussed in this SAP and will be conducted consistent with the FEMP Site-Wide CERCLA Quality Assurance Project Plan (SCQ).

The analytical results generated by this SAP will also be evaluated for incorporation into the CERCLA RI/FS. Data from this sampling effort will be used to evaluate and prioritize the needs for additional interim removal actions in the Plant 2/3 Area (which includes the NAR System Components).

1.1 Sampling Approach

Sampling and analysis to be conducted for this CPID is required to support the following data needs:

1) Verify the results of decontamination efforts, as discussed in Section 3 of the CPID for the NAR System Components.

2) Provide soil contamination screening data for use in identifying if significant contamination exists (e.g., results in excess of TCLP limits) that requires further actions prior to the final remediation of the Plant 2/3 area under the RD/RA work plans for OU3 and OU5.

3) Determine the characteristics and regulatory status of decontamination material and evaluate the proper disposal, treatment, or storage option.

4) Determine the appropriate level of health and safety requirements for protection of site workers during waste disposal, treatment, or storage.

1.2 Sampling Objectives

All sampling and analysis activities must be conducted and documented in a manner ensuring that sufficient data of known quality are collected to support the end use of the data. The DQOs specified for each data collection activity are qualitative and quantitative statements specifying the quality of the data required to support decisions during remedial response activities. DQOs developed for data collection for the various response actions are maintained by FERMCO for reference and/or use to address similar data collection needs as the CERCLA removal and response action work plans are developed.

The FEMP SCQ defines analytical support levels (ASL) A, B, C, D, or E as major component of DQOs. The ASL levels are described in Appendix 1 and referenced below.

SAP discusses sampling to characterize and confirm decontamination of the NAR System Components. Decontamination of the NAR System will be conducted using multiple water rinses. To minimize decontamination waste water, rinse water will be recirculated/reused, where feasible, as long as the pH levels continue to drop. Preliminary field sampling and analyses (per ASL support level A) will be conducted to measure pH and evaluate the effectiveness of decontamination efforts and determine when the rinse waters need to be replaced. After the field measurements fall within the range of 6.0 to 9.0, at least three samples of the rinseate will be collected for laboratory analyses for the constituents identified in Table A-1 (per ASL level B).

1.3 Sample Analyses

Samples collected for field screening of pH measurements will be analyzed using a combination of pH litmus test paper and pH electrode measurements (SW-846 Method 9040). Field screening will continue until the pH measurements fall within the range of 6.0 to 9.0.

At least three (3) decontamination verification samples will be collected from the final rinse. Table A-1 lists the targeted waste constituents and characteristics and clean up action limits. The clean up action levels listed in Table A-1 will be used to determine if decontamination has been successful.

Quality Assurance and Quality Control (QA/QC) samples will also be collected from the final rinse consistent with the current requirements of the FEMP SCQ as discussed in Section 4.0 of this SAP.

The sampling locations will be defined by the points at which the rinseate

is withdrawn from the tanks for discharge to the UNH Tank systems under Removal Action No. 20.

2.0 SAMPLE COLLECTION

The following sections discuss the procedures to be followed in collecting rinseate samples and soil samples from the NAR System Components. Outdoor sampling or decontamination activities will not be conducted during adverse weather (e.g., rain, snow).

2.1 Sampling Equipment

The following equipment will be used to collect rinseate samples:

- 500 mL amber glass widemouth bottle with teflon-lined closure
- Thermal coolers and freezer packs
- Sample labels
- Waterproof marking pen
- Field sampling logbook and field data forms
- Acid resistant gloves
- Polyethylene or other approved impervious sheeting
- Dedicated, clean rinseate sample collection drums
- Coliwasa sampler
- Peristaltic sampling pump(s)
- Tygon tubing

This list may be modified as appropriate by a trained, qualified sampling supervisor or manager. Any change to this list will be noted in the field sampling logbook.

2.2 Rinseate Sampling

The following procedures will be followed to collect the rinseate characterizations and verification samples:

1) A portion of the rinse will be pumped or drained directly into the sample containers or, if necessary, into dedicated rinseate sampling drums. As applicable, samples of the rinse

waters and QA/QC duplicates will be collected from the drum using a Coliwasa sampler or an appropriate sampling pump and tubing.

2) Samples will be analyzed for the presence of the waste constituents or hazardous waste characteristics listed in Table A-1.

4) Sample containers for the final rinseate to be used for decontamination verification will be managed as discussed in Section 2.4.

2.3 Soil Sampling

2.3.1 Soil Sampling Locations

The soil sampling location will be selected in the field. The location will be determined by identifying the lowest elevation adjacent to the secondary containment for tank F1-24. The composite samples will be collected from this location or where signs of contamination are present. The NAR System Components are displayed on Figure 3 in the NAR System Components CPID.

2.3.2 Soil Sampling Procedures

Samples of the soil adjacent to F1-24 tank area will be taken, as indicated in the CPID, for initial soil screening and, possibly, for inclusion into the RI/FS data base for OU5.

Before initiating any sampling activities, site blueprints will be reviewed with the facility engineer to determine if there are any known underground utilities, pipes, wiring or other similar structures. Underground structures will be identified and marked at the unit to prevent sampling in these areas. Sampling or decontamination activities

will not be conducted during adverse weather (e.g., rain, snow).

The following procedures will be used to collect samples of the soil adjacent to the secondary containment area. The soil samples will be collected from the location described in section 2.3.1 of the SAP.

1) Place clean polyethylene or other approved impervious sheeting on the ground to protect sampling equipment from potential contamination.

2) Use a decontaminated stainless steel bucket auger or soil coring device to advance the soil boring to extract a 6 inch soil sample.

3) Use a decontaminated spatula (stainless steel or other suitable material), or other approved device to remove soils from the auger. Transfer the sample into the appropriate sample container.

4) Follow container management procedures in Section 2.4.

5) Repeat steps 1-3 to extract samples from 6" to 18" below grade and from 18" to 36" below grade.

6) Using the above procedures, collect one (1) duplicate sample of the soil from a randomly selected sampling location.

7) Upon completion of sampling at a sampling location, decontaminate all sampling equipment used, following procedures in Section 2.5. Sampling equipment that cannot be decontaminated shall be managed in a manner consistent with FEMP hazardous waste management practices pending a RCRA hazardous waste determination.

Upon completion of sampling, seal sample coolers and transfer them to the designated FEMP sample receiving area. These samples will be analyzed by the FEMP analytical laboratory using SW-846 Method 9045.

2.4 Sample Handling and Management of Sample Containers

Once a sample has been placed inside a sample container it will be managed as follows:

1) For all samples: Tightly close the lid, seal the lid with custody tape and attach appropriate label that has been filled out using indelible ink.

2) Record the sample label and container information in the field sampling logbook and on a Sitewide Sample Analysis Request/Custody Record (SWSAR/CR) form.

3) Immediately place sample containers into a sample cooler that will maintain samples at approximately 4° C.

4) Record all transfers of sample custody on the SWSAR/CR form.

5) To maintain chain-of-custody, ensure that access to all samples is controlled. This requires the sample collector or designated sample custodian to:

   - have constant direct physical control,
   - use a locked limited access area under his/her control, or
   - affix signed container custody seals on samples or sample coolers.

When the planned sampling activity has been completed, secure the lid of the sample cooler and transfer the samples with the appropriate SWSAR/CR

form to the FEMP Sample Processing Laboratory. The FEMP Sample Processing Laboratory will be responsible for ensuring custody records are maintained during shipment to the laboratory selected to conduct the analyses.

2.5 Equipment Decontamination

Before beginning any decontamination procedures, all personnel shall inspect their clothing to ensure that clean clothing or clean disposable outer coveralls are used. All personal protective equipment (PPE) will be free of contamination prior to beginning the decontamination process and when handling any clean equipment. Equipment decontamination procedures are discussed in the following sections.

All sampling equipment that will be used must be clean or decontaminated prior to use. All reusable sampling equipment that has been used to collect a sample must be decontaminated before it is used to collect additional samples. After decontamination, all equipment must be tagged and bagged as "clean".

2.5.1 Sampling Equipment Decontamination Supplies

Supplies used in decontamination may vary based on the media being sampled and the type of contamination encountered. The following basic list of supplies may be modified, as necessary, by a trained, qualified supervisor or manager:

- Laboratory grade non-phosphate detergent solution
- Long-handled scrapers (stainless steel, glass)
- Long-handled, soft bristled brushes
- Portable low-pressure water sprayer
- Potable water
- Deionized water (organic free)
- Reagent grade ethanol rinse
- Dilute (0.02 normal) hydrochloric or sulfuric acid rinse

- Polyethylene or other approved impervious sheeting
- Heavy duty plastic bags
- Absorbent materials, socks, and pads
- Wash/rinse tubs, buckets, or other approved containers

2.5.2 Sampling Equipment Decontamination Procedures

All reusable sampling equipment will be decontaminated after each use. If decontamination is not practical, the sampling equipment will be managed in a manner consistent with FEMP hazardous waste management practices pending RCRA waste determinations. The following procedures will be used to decontaminate sampling equipment:

1) Establish a decontamination area in a location that is protected from potential contamination. Use a double thickness of 6-mil polyethylene or other suitable sheeting to line the decontamination area, including containment dikes or berms for run on/run off control.

2) Provide appropriate containers for containment, handling, and collection of wastes. Non-liquid wastes shall be collected in a heavy duty plastic bag, 55-gallon drum, or other suitable container. Liquid wastes will be collected in buckets and/or placed into 55-gallon drums or other suitable liquid storage containers. Liquid wastes will be pumped into the discharge line from the NAR to the UNH Tank Systems. Solid wastes will be stored at the FEMP in an approved RCRA storage area pending RCRA waste characterizations and determinations.

3) Establish sample equipment decontamination line including the following:

   Stage 1) Rinse with potable water, wash with non-phosphate laboratory grade detergent, and rinse with potable water

rinse. As necessary, use brushes and scrapers to remove visible contamination and stains. If needed, steam cleaning or high pressure potable water may be used as an alternate decontamination method.

Stage 2) A dilute (0.02 normal) hydrochloric or sulfuric acid solution rinse followed by a potable water rinse.

NOTE: Residual acids in used rinse solutions will be neutralized.

Stage 3) A solvent rinse (using an approved solvent, such as ethanol) followed by a final triple rinse with deionized water.

4) At least once per day, for each media being sampled and each decontamination line, collect a QC rinse sample of the final rinse. The sample will be collected using the procedures in section 4.1 of this SAP.

5) After the sampling equipment has been properly decontaminated, place it on a clean sheet of plastic or other suitable material to air dry. While air drying, loosely cover the equipment with another clean piece of sheeting to minimize the potential for contamination.

6) Upon completion of decontamination of sampling equipment, the buckets and other containers used for temporary storage of the decontamination wash and rinse wastes will be washed with clean detergent solution and rinsed twice with deionized water.

2.6 Wastes Generated During Sampling and Decontamination

Wastes and materials generated during sampling and analyses will be managed in a manner consistent with approved Management of Investigation-Derived Wastes practices. Wastes and materials generated during sampling and analyses will be managed in a manner consistent with approved FEMP hazardous waste management practices. Equipment decontamination wash and rinse waste waters will be added to the acid and rinse waters being used to flush the emptied UNH Tanks under Removal Action # 20. Other solid wastes (e.g., personnel protective equipment, plastic sheeting, etc.) will be characterized and placed as appropriate into containers, and stored in a RCRA Storage area pending characterization following Waste Determination Plans. Based on the waste characterizations, wastes will be managed and disposed according to all applicable hazardous and solid waste rules and regulations.

3.0 FIELD DOCUMENTATION AND SAMPLE HANDLING

Sample handling and documentation procedures shall conform to approved FEMP procedures applicable at the time closure activities are conducted. The information in the following sections presents the procedures to follow during and after the samples have been collected.

3.1 Field Sampling Logbook

A field sampling logbook will be kept and updated to document information pertinent to the RCRA closure sampling activities. At a minimum, the entries in the logbook will include the following:

- Name of supervisor(s) responsible for HWMU management
- Name of FEMP closure project manager
- Maps, drawings, or photographs of the sampling site
- Purpose of sampling (e.g., verification of decontamination)
- Description and location of sampling points
- Description of sampling methods and field sampling activities (e.g., containers, types of samples, etc.)
- Task review meetings
- Documentation of any deviations from this SAP
- Weather conditions at the time samples are collected
- Number, type, and volume of samples taken
- Date and time of collection
- Field sample identification number(s)
- Names of sampling personnel
- Date and time of transfer to sample receiving/shipping area
- Field observations (e.g., spills or other activities nearby)
- Data from field measurements (e.g., pH, specific conductance)
- Signatures of persons responsible for maintaining the logbook

The logbook will record information sufficient to reconstruct the sampling event without reliance on the collector's memory. The logbook shall be

stored and maintained according to FEMP document control procedures.

3.2 On-Site Handling/Processing Procedures

Sample coolers, along with the signed and completed SWSAR/CR form, will be taken to the FEMP Sample Processing Laboratory. Each person who relinquishes or takes possession of the samples or sample coolers shall sign the Custody Record and record the date and time of transfer.

The FEMP will characterize radiation levels associated with the samples to determine disposition of the samples.

4.0 QUALITY ASSURANCE AND QUALITY CONTROL

Quality Assurance/Quality Control (QA/QC) procedures are required to identify, evaluate, and control conditions and activities that can affect the quality and validity of the analytical data obtained from sampling and analyses. Validation of data requires accurate records to document procedures and conditions during the sampling and analysis. At a minimum, these records will include:

- an updated field sampling logbook
- properly completed sample labels
- field and laboratory QA/QC samples
- completed SWSAR/CR forms

Quality assurance procedures will include:

- Only clean sample containers will be used.
- Clean PPE will be used whenever contact is made with the sampling equipment.
- Sampling containers and collection equipment shall be handled, stored, and maintained in a manner that prevents cross-contamination.
- Any field conditions, events, or activities that may affect analytical results will be documented in the field sampling logbook (see Section 3.1 of this SAP).

Sampling activities will be conducted consistent with applicable FEMP QA/QC procedures as defined in the current revision of the SCQ. The following sections discuss field QA/QC, laboratory QA/QC, and SWSAR/CR forms.

4.1 Field QA/QC Procedures

To minimize the potential for cross-contamination between samples and locations, only clean or decontaminated sampling equipment will be used. An equipment rinseate sample will be collected on a daily basis and analyzed for the constituents listed in Table A-1, to provide QA/QC information concerning the effectiveness of the decontamination process and to identify possible cross contamination of samples. As a normal practice, it is presumed that the decontamination procedures are adequate for reuse of decontaminated equipment, as needed, even though QA/QC analyses is not complete. The following procedures will be used to collect sampling equipment decontamination rinse samples:

- Pour deionized water over and through the cleaned surfaces of the decontaminated sampling equipment.
- Collect the deionized water rinseate using an appropriate sample container.
- Follow sample container management procedures in Section 2.4 of the SAP.

Blanks will be collected and analyzed as part of normal QC procedures. At a minimum, the following samples will be collected each sampling event:

- one (1) container blank consisting of a sample of clean deionized water prepared and retained in a non-contaminated area.
- one (1) field blank consisting of a grab sample of the deionized rinse water supply (used for sampling equipment rinse), taken into the field and exposed to the airborne contamination that may impact sample data.

To evaluate the impact of field sampling activities on analytical

precision (i.e., repeatability of results), field duplicate samples will be collected. At least one (1) duplicate sample of NAR System decontamination verification rinseate samples will be collected for this project.

4.2 Laboratory QA/QC Procedures

The analytical laboratory shall use the approved SW-846 Methods as specified in the SCQ for the constituents of concern. The laboratory will document the use and results of laboratory quality control samples and analyses. Laboratory samples for quality control (QC) may include:

- sample preparation blanks to detect residual contamination of analytical equipment that may affect analytical results,
- duplicate samples prepared in the laboratory to evaluate the precision (i.e., the ability to reproduce analytical results) achieved by the methods used.
- Laboratory control and calibration verification samples (to verify calibration of the equipment).
- Matrix-Spike samples to evaluate analytical recovery rates.

All pertinent information concerning problems and conditions that may affect the validity of the analytical data must be clearly identified. In addition to laboratory QC and analytical data, information to be provided by the laboratory includes:

- Name of person receiving the sample
- Date and time of sample receipt
- Laboratory sample number (if different from field ID)
- Date and time of sample analysis
- Signature of the laboratory supervisor

Conditions outside the control of the laboratory that could affect sample quality and validity of analytical results shall also be documented by the

laboratory. These conditions include items such as:

- discrepancies between sample shipping records, sample analytical requests, custody records and the sample shipments as received by the laboratory,
- sample containers and packaging problems, such as broken containers, loose lids, and broken custody seals.

To prevent any laboratory bias, field duplicate samples submitted shall not be identifiable as duplicates in any of the information provided to identify samples or any special conditions/qualifying statements to support the request for analysis. Field duplicate samples will be noted in the field sampling logbook for use in FEMP QA/QC review of analytical reports.

4.3 Sample Analysis Request/Chain-Of-Custody Procedures

Each sample container shall be labeled with the sample number and identification that is consistent with the SWSAR/CR form. Prior to relinquishing possession of a sample, the person that collected the sample shall complete and sign a SWSAR/CR. Each person that accepts custody will also sign and date the custody record. A complete record of custody transfers shall be maintained on the SWSAR/CR form.

All samples taken to the FEMP Sample Processing Laboratory must be accompanied by the completed SWSAR/CR form. An Off-Site Sample Analysis Request/Custody Transfer Record will be prepared and accompany samples to be sent off-site for laboratory analyses.

The laboratory conducting the analyses will be responsible for maintaining sample custody logs until samples are returned to the FEMP or disposed after obtaining FEMP approval. The Custody Records will document sample possession from the time of collection through analysis by the laboratory. Records of any custody seals used on sample containers shall be

maintained. The laboratory will document the condition of any custody seals on containers that they receive. Laboratories conducting analyses are required to provide the FEMP a copy of all completed laboratory custody records.

The completed sample Analysis Request/Custody Record, Off-Site Analysis Request/Custody Transfer Record, and laboratory custody forms will be signed and returned with the analytical report for the samples identified on the form(s). These documents will be filed in the FEMP RCRA HWMU Closure files.

5.0 HEALTH AND SAFETY

Prior to conducting any field activities at the FEMP, a health and safety assessment must be conducted to characterize existing hazards and conditions. Based on the findings of the health and safety assessment, the Project/Task Specific Health and Safety Plan will specify required health and safety procedures, including personnel protection equipment, entry and exit requirements, and personnel/PPE decontamination procedures. Guidelines for the Preparation of FMPC Project/Task Specific Health and Safety Plan are included in Attachment C.

As part of the safety assessment, radioactivity screening will be done over the area to determine radiation protection requirements. Additional screening, including on-site laboratory analyses for radionuclides, may be required to further categorize radiation levels and hazards before the samples can be shipped to an off-site laboratory. Radiation survey procedures and requirements for shipping samples to off-site laboratories for analysis will be in accordance with approved FEMP/FMPC procedures.

TABLE A-1: TARGET CONSTITUENT/CHARACTERISTICS AND CLEANUP ACTION LEVELS

Targeted Hazardous Waste Constituents and Characteristics	Clean up Action Levels	
TCLP Metals:	**TCLP Limit (mg/l)**	**ASL**
Arsenic	5.0	B
Barium	100.0	B
Cadmium	1.0	B
Chromium	5.0	B
Lead	5.0	B
Mercury	0.2	B
Selenium	1.0	B
Silver	5.0	B
RCRA Characteristic		
Corrosivity	pH < 2.0 or > 12.5	B
Radiological:		
Total Uranium	N/A	B

APPENDIX 1 : ANALYTICAL SUPPORT LEVELS

The intended use of acquired data is to assess the nature of the site and the degree and extent of potential problems resulting from past activities, to evaluate the potential hazard to human health and the environment, to evaluate remedial actions, to choose and implement preferred remedial actions, and to monitor the migration of contaminants and the effectiveness of remedial actions.

Data Quality Objectives (DQOs) are qualitative and quantitative statements specifying the quality of data required to support decision making. Because they are based on end use of the data to be collected, different uses require different levels of data quality. There are five Fernald Environmental Management Project (FEMP)-defined analytical levels that will be assigned depending on intended use of the data and the Quality Assurance/Quality Control (QA/QC) methods required to achieve the desired level of quality. These levels are analogous to the 1987 EPA-defined DQO levels 1 through 5 (U.S. Environmental Protection Agency [EPA] 1987). However, because radionuclides comprise a large proportion of the analyses supporting FEMP programs and projects and because these radionuclide analyses have been used and verified by DOE and DOE contractors for many years, it is appropriate to address these measurements as standard. Therefore, in order to maintain consistency in definition of DQO levels and to avoid confusion between EPA and DOE/EPA programs, DQO levels at FEMP will be referred to as analytical support levels (ASL) A through E.

ASL A (Qualitative Field Analysis)

Provides the most rapid (real or short time) results. ASL A is often used for health and safety monitoring at the site, preliminary comparison to Applicable or Relevant and Appropriate Requirements (ARARs), initial site characterization to locate areas for subsequent and more accurate analyses, field screening of samples to select those for fixed laboratory analysis, and engineering screening of alternatives (bench-scale tests).

These types of data include those generated on site through the use of Photo- or Flame-Ionization Detectors (PID or FID), pH, conductivity, alpha and beta-gamma friskers, or radiological wipe samples. ASL A is analogous to EPA DQO Level 1.

Example: Field screening for alpha, beta, and gamma radiation conducted with portable field equipment provides real time qualitative analysis for the presence or absence of radioactive isotopes.

Example: Field screening for chemical gases in the well bore of groundwater monitoring wells using Photo-Ionization Detectors provides real time qualitative analysis for presence of volatile compounds (e.g., benzene, toluene).

ASL B (Semi-Quantitative/Quantitative and Qualitative Analyses)

Provides more quality control checks than ASL A and results may be qualitative, semi-quantitative, or quantitative. ASL B can be assigned when rapid turnaround results are needed. FEMP-specified analytical protocols shall be used. There are two sublevels available for specifying QA/QC, data reporting, and data validation requirements.

Sublevel 1 specifies QA/QC, data reporting, and data validation requirements for FEMP-specified analytical protocols, which are similar to those used for ASLs C and D, but with different QA/QC sample type and frequency, quality control criteria for acceptance ranges, and requirements for data packages.

Sublevel 2 specifies user-defined and special requirements. The data user shall specify QA/QC, data reporting, and data validation requirements based on intended data use and regulatory requirements. Specific requirements shall be defined in project specific plans (PSPs).

Methods may range from more sophisticated screening techniques to fully

defined methods similar to ASL C or D for radiological and non-radiological parameters, but with reduced QA/QC frequency and data reporting requirements for more rapid turnaround times. Also included in ASL B are standard methods (e.g., EPA 500-series drinking water methods with QA/QC requirements different than those specified for ASLs C and D) and conventional parameter analysis in support of regulatory requirements such as NPDES permit monitoring.

Example: Measurement of gross alpha and beta radioactivity in water in compliance with the Safe Drinking Water Act to provide information on drinking water quality.

Example: Determination of volatile halogenated organic compounds (e.g., chloroform) in water by purge and trap gas chromatography without second column confirmation, with a limited suite of field and laboratory QC samples, and a minimal data package.

ASL C (Quantitative with Fully Defined QA/QC)

Provides data generated with full QA/QC checks of types and frequencies specified for ASL D according to FEMP-specified analytical protocols for radiological and non-radiological parameters. The analytical methods are identical to ASL D for QA/QC sample analysis and method performance criteria. However, the data package does not typically contain raw instrument output but does include summaries of QA/QC sample results. ASL C may be used when analyses require a rigid, well-defined protocol, but where other information is available, so that a complete raw data package validation effort is not required. Laboratories shall be required to retain, in the project file, raw instrument data required to upgrade ASL C reports to ASL D.

Example: Analysis of total uranium by the fluorimetric method with a full set of QA/QC samples as specified for ASL D. A summary data package is provided including QA/QC sample performance without raw instrument output.

A limited level of data validation is required because only the summary forms need review.

Example: Determination of volatile organic compounds in soil by purge and trap gas chromatography/mass spectrometry with a full complement of QA/QC samples as specified for ASL D. A summary data package is provided including QA/QC sample performance without raw instrument output. A limited level of data validation is required because only the summary forms need review.

ASL D (Conformational With Complete QA/QC and Reporting)

Provides data generated with a full complement of QA/QC checks of specified types and frequencies according to FEMP-specified analytical protocols for radiological and non-radiological parameters. The data package includes raw instrument output for validation of ASL D data. It may be used to confirm data gathered at ASLs B and C and when full validation of raw data is required.

Example: Analysis of total uranium by the fluorimetric method, with a full set of QA/QC samples per analytical batch with analytical results and the full raw data package reported from the laboratory.

Example: Determination of volatile organic compounds in soil or water by purge and trap gas chromatography/mass spectrometry with a full complement of field and laboratory QA/QC samples. A complete raw data package is provided and validated for the analyses.

ASL E (Non-Standard)

Analyses by non-standard protocols that often require method development or validation (e.g., when exacting detection limits or analysis of an unusual chemical compound are required). ASL E methods may be significantly different from those specified for ASLs B, C, or D data.

New methods may be developed for ASL E data to allow for parameters or matrices that cannot be analyzed using existing standard methods. This could be caused by interferences, analyses performed outside of accepted requirements for existing methods, or new methods developed to meet site requirements or project-specific requirements that cannot be met by existing analytical methods.

Example: Analysis or evaluation of a geotextile material for suitability to use as a component of a remedial action at the site. Existing evaluation methods may not be adequate to evaluate site-specific needs so development of a new method is required.

Example: Determination of organic compounds (e.g., benzo(a)anthracene) in drinking water at sub-part per billion levels by special method on-column injection gas chromatography/mass spectrometry with selective ion monitoring detection and a full suite of field and laboratory QA/QC samples as required for ASLs C and D data. A complete raw data package may be required for validation.

-5200

ATTACHMENT B

PRELIMINARY DATA FOR MEDIA CONTAMINATION AT PLANT 2/3

June 1993

Fernald Office
U. S. Department of Energy
Fernald Environmental Management Project
7400 Willey Road
Fernald, Ohio 45030

TABLE OF CONTENTS

Section Title

1.0 FACILITY AND BORING LOCATIONS MAPS

2.0 CHEMICAL DATA FROM SOIL BORINGS 1183 & 1193

3.0 TARGET CONSTITUENT LIST CHEMICALS DETECTED IN PERCHED WATER

4.0 RADIOCHEMICAL DATA FROM SOIL BORINGS 1175 - 1225

5.0 TCLP AND RADIOCHEMICAL DATA COLLECTED FOR "GUARDPOSTS FOR MONITORING WELLS" PROJECT

SECTION 1.0

PLANT 2/3

FACILITY AND BORING LOCATIONS MAP

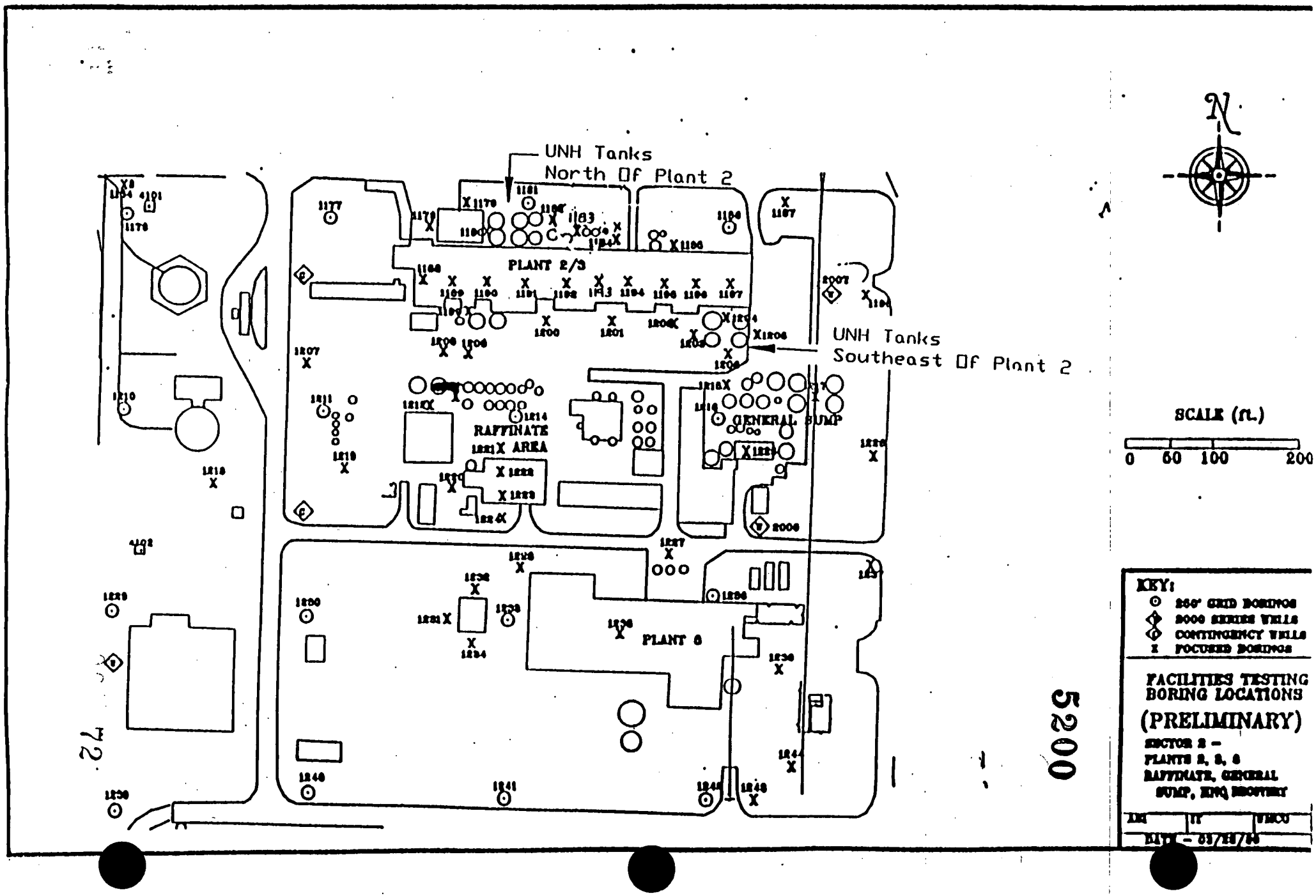
UNH Tanks
North Of Plant 2
PLANT 2/3
UNH Tanks
Southeast Of Plant 2
RAFFINATE
AREA
GENERAL SUMP
PLANT 6
N
SCALE (ft.)
0 50 100 200
KEY:
250' GRID BORINGS
2000 SERIES WELLS
CONTINGENCY WELLS
FOCUSED BORINGS
FACILITIES TESTING
BORING LOCATIONS
(PRELIMINARY)
SECTOR 2 -
PLANTS 2, 3, 6
RAFFINATE, GENERAL
SUMP, ENG BROTHER
5200

72

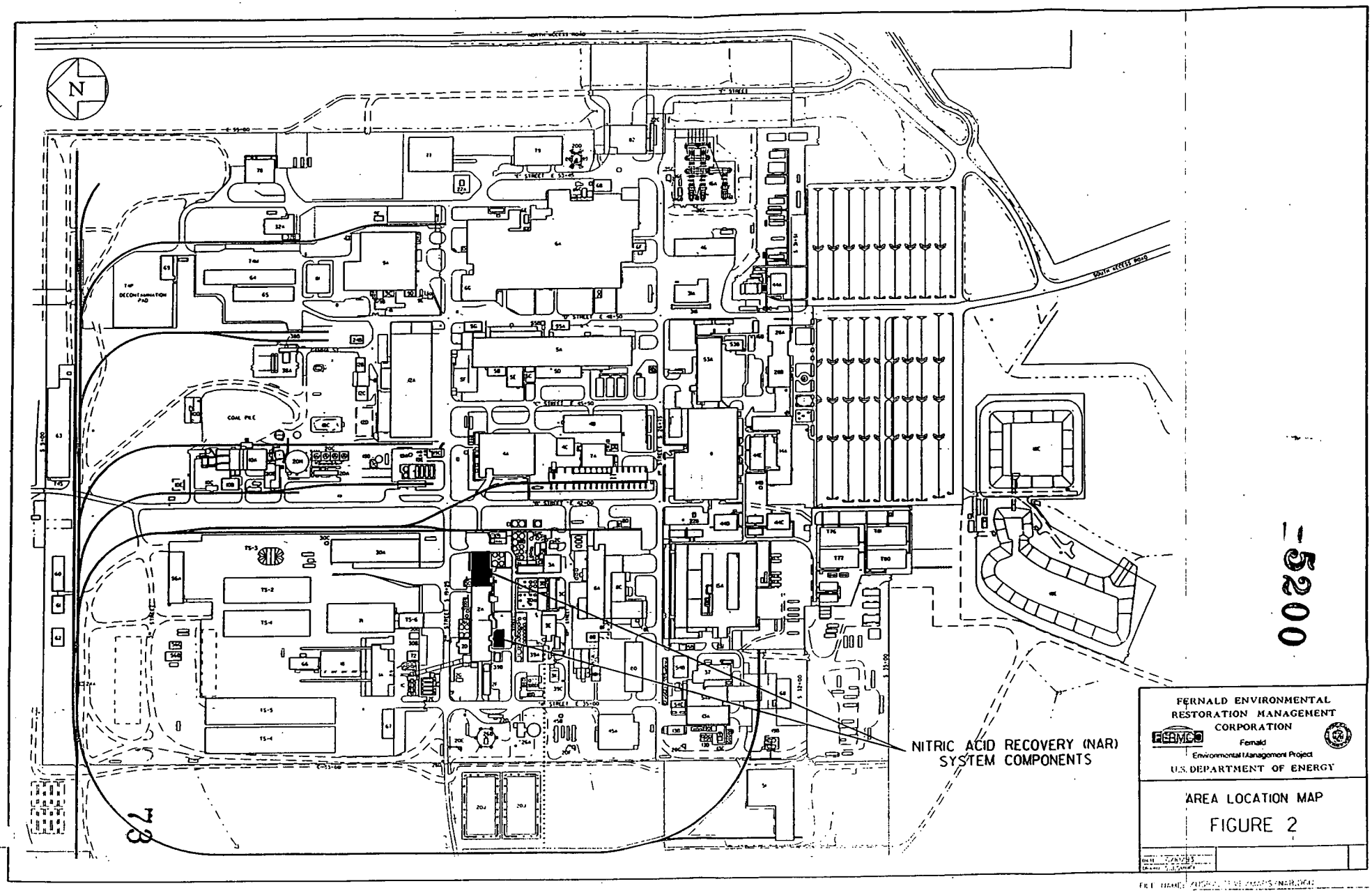
N
NITRIC ACID RECOVERY (NAR)
SYSTEM COMPONENTS
COAL PILE
TS-1
TS-2
TS-3
TS-4
TS-5
TS-6
FERNALD ENVIRONMENTAL
RESTORATION MANAGEMENT
CORPORATION
FERMCO
Fernald
Environmental Management Project
U.S. DEPARTMENT OF ENERGY
AREA LOCATION MAP
FIGURE 2

-5200

73

SECTION 2.0

CHEMICAL DATA FROM SOIL BORINGS 1183 & 1193

COLLECTED UNDER OU3 RI/FS

Table G-I-2: TCL CHEMICALS DETECTED IN SOILS OF OPERABLE UNIT 3

SAMPLE LOCATION	SAMPLE DEPTH (ft)	Benzo(g,h,i)-perylene	Benzo(k)-fluoroanthene	Benzoic Acid	Beta-BHC	Bis(2-ethylhexyl)-phthalate	Carbon disulfide	Chloro-benzene
Maintenance Bldg. W of Plant 8								
—1234	0-0.5							
Area N of Maintenance Bldg								
—1316	2.0-2.5							
— 1307	1.5-3.0							
1307	3.0-4.5							
1307	0.5-1.0							
1307	0-0.5		790.0			500.0		
— 1308	0-0.5	12000.0						
1308	0.5-1.0	1500.0	3100.0					
— 1317	1.5-2.0					38.0		
1317	1.0-1.5							
Area N of Mg Storage Bldg								
— 1294	2.0-3.0							
Pilot Plant Area								
—1250	0-0.5					71.0		
1250	0.5-1.0							
— 1252	0.5-1.0	230.0	550.0			58.0		5.0
1252	0-0.5	3700.0	5000.0		220.0			
—1260	0-0.5	400.0	730.0			46.0		
1260	0.5-1.0	440.0	510.0		46.0			
—1411	10.0-10.5					1100.0		
1411	9.5-10.0					810.0		
Plant 2/3 Area								
—1183	0.5-1.0			88.0				
1183	0-0.5					180.0		
—1193	6.0-7.5							
HIGHEST VOC LAB BLANK:								
HIGHEST DILUTED VOC BLANK:								
INORGANIC ave:								
BACKGROUND min:								
max:								

All Organic concentrations in ug/kg, all Inorganic concentrations in mg/kg

5200

Table G-I-2: TCL CHEMICALS DETECTED IN SOILS OF OPERABLE UNIT 3

SAMPLE LOCATION	SAMPLE DEPTH (ft)	Chloroform	Chrysene	Di-n-butyl-phthalate	Dibenzo(a,h)-anthracene	Dibenzo-furan	Ethyl-benzene	Fluoranthene	Fluorene
Maintenance Bldg. W of Plant 8									
—1234	0-0.5								
Area N of Maintenance Bldg									
—1316	2.0-2.5								
1307	1.5-3.0								
1307	3.0-4.5								
1307	0.5-1.0							1600.0	
1307	0-0.5		900.0					33000.0	3300.0
1308	0-0.5		18000.0		6900.0	2000.0		5900.0	380.0
1308	0.5-1.0		3000.0		690.0	210.0			
1317	1.5-2.0								
1317	1.0-1.5								
Area N of Mg Storage Bldg									
1294	2.0-3.0								
Pilot Plant Area									
—1250	0-0.5							43.0	
1250	0.5-1.0								
—1252	0.5-1.0		550.0		420.0			940.0	44.0
1252	0-0.5		7200.0		1500.0	640.0		10000.0	1700.0
—1260	0-0.5		860.0			55.0		1500.0	130.0
1260	0.5-1.0		790.0	46.0	140.0	72.0		1600.0	160.0
1411	10.0-10.5			1400.0				190.0	
1411	9.5-10.0			1400.0				94.0	
Plant 2/3 Area									
—1183	0.5-1.0								
1183	0-0.5								
—1193	6.0-7.5								
HIGHEST VOC LAB BLANK:									
HIGHEST DILUTED VOC BLANK:									
INORGANIC BACKGROUND	ave:								
	min:								
	max:								

All Organic concentrations in ug/kg, all inorganic concentrations in mg/kg

Table G-I-2: TCL CHEMICALS DETECTED IN SOILS OF OPERABLE UNIT 3

SAMPLE LOCATION	SAMPLE DEPTH (ft)	Indeno(1,2,3-cd)-pyrene	Methylene Chloride	N-nitrosodi-phenylamine	Naphthalene	PCB-1248	PCB-1254	PCB-1260	Pentachloro-phenol
Maintenance Bldg. W of Plant 8									
– 1234	0-0.5		21.0						
Area N of Maintenance Bldg									
– 1316	2.0-2.5		3.0				200.0		
– 1307	1.5-3.0		4600.0						
1307	3.0-4.5		4200.0						
1307	0.5-1.0		1200.0	130.0			1200.0		
1307	0-0.5		3000.0	580.0			8600.0		
– 1308	0-0.5	13000.0	21.0		1300.0				
1308	0.5-1.0	1500.0	9.0				1700.0	2100.0	
– 1317	1.5-2.0		3.0						
1317	1.0-1.5		50.0						
Area N of Mg Storage Bldg									
– 1294	2.0-3.0		20.0						
Pilot Plant Area									
– 1250	0-0.5		7.0				120.0		
1250	0.5-1.0		10.0						
– 1252	0.5-1.0	160.0	20.0				170.0	270.0	
1252	0-0.5	2900.0	20.0				1000.0	1000.0	
– 1260	0-0.5	280.0	20.0				200.0	340.0	
1260	0.5-1.0	330.0	19.0						
– 1411	10.0-10.5		6700.0					1100.0	
1411	9.5-10.0							830.0	
Plant 2/3 Area									
– 1183	0.5-1.0		5.0	130.0					
1183	0-0.5		8.0	100.0			360.0		
– 1193	6.0-7.5		17.0						
HIGHEST VOC LAB BLANK:			21.0						
HIGHEST DILUTED VOC BLANK:			2500.0						
INORGANIC ave:									
BACKGROUND min:									
max:									

All Organic concentrations in ug/kg, all inorganic concentrations in mg/kg

Table G-I-2: TCL CHEMICALS DETECTED IN SOILS OF OPERABLE UNIT 3

SAMPLE LOCATION	SAMPLE DEPTH (ft)	phenanthrene	Phenol	Pyrene	Tetrachloro-ethene	Toluene	Total Xylenes	Trichloro-ethene
Maintenance Bldg. W of Plant 8								
1234	0-0.5					1.0		
Area N of Maintenance Bldg								
1316	2.0-2.5				1600.0			120000.0
1307	1.5-3.0							150000.0
1307	3.0-4.5				2000.0			56000.0
1307	0.5-1.0	740.0			3300.0	190.0		89000.0
1307	0-0.5	1400.0		1400.0		4.0		18.0
1308	0-0.5	22000.0		22000.0				7.0
1308	0.5-1.0	3700.0	200.0	4300.0		2.0		
1317	1.5-2.0					2.0		
1317	1.0-1.5							
Area N of Mg Storage Bldg								
1294	2.0-3.0				1.0			
Pilot Plant Area								
1250	0-0.5							5.0
1250	0.5-1.0		69.0			1.0		4.0
1252	0.5-1.0	480.0		860.0		5.0		5.0
1252	0-0.5	8800.0		10000.0	1.0			
1260	0-0.5	950.0		1400.0	2.0			3.0
1260	0.5-1.0	1300.0		1300.0				
1411	10.0-10.5	240.0		150.0	17000.0		31000.0	2000.0
1411	9.5-10.0	140.0		83.0				
Plant 2/3 Area								
1183	0.5-1.0					2.0		
1183	0-0.5					2.0		
1193	6.0-7.5					2.0		
HIGHEST VOC LAB BLANK:						4.0		
HIGHEST DILUTED VOC BLANK:						150.0		
INORGANIC BACKGROUND	ave:							
	min:							
	max:							

All Organic [illegible]ntrations in ug/kg, all inorganic concentrations in mg/kg

78

5200

Table G-I-2: TCL CHEMICALS DETECTED IN SOILS OF OPERABLE UNIT 3

SAMPLE LOCATION	SAMPLE DEPTH (ft)	Aluminum	Arsenic	Barium	Beryllium	Cadmium	Calcium	Chromium	Cobalt	Copper	Cyanide
Maintenance Bldg. W of Plant 8											
— 1234	0-0.5										
Area N of Maintenance Bldg											
-- 1316	2.0-2.5	3000	2.8	39.0	0.99	4.0	139000	17.0	6.4		8.60
-- 1307	1.5-3.0										
1307	3.0-4.5										
1307	0.5-1.0	6400		456.0	0.57	5.4	132000	32.1	11.7	15.8	
1307	0-0.5	5690		434.0	0.59	6.7	91900	67.5	16.8	48.9	
— 1308	0-0.5	3050	4.4	93.4	1.20	8.0	157000	48.3	12.2	65.2	22.80
1308	0.5-1.0	2370	3.7	79.7	1.10	7.1	180000	53.0	9.7	46.2	20.60
-- 1317	1.5-2.0	5560	3.6	30.3	0.96	4.6	111000	22.0	11.5	12.0	
1317	1.0-1.5	5470	3.6	23.2	1.10	5.1	126000	21.2	13.8	10.2	
Area N of Mg Storage Bldg											
— 1294	2.0-3.0										
Pilot Plant Area											
— 1250	0-0.5	9560	6.3	95.5	1.50	3.4	35200	23.8	13.8	27.1	
1250	0.5-1.0	9530	6.5	88.8	1.70	4.5	115000	23.4	16.5	22.3	
— 1252	0.5-1.0	12400	6.7	406.0	0.94	3.0	8440	19.7	14.0	25.3	
1252	0-0.5	10500	7.4	401.0	1.20	4.7	86600	24.4	13.9	19.0	
— 1260	0-0.5	5920	5.7	336.0	1.20	5.4	181000	19.4	13.3	28.9	
1260	0.5-1.0	4900	3.9	317.0	0.82	3.4	103000	16.6	7.0	8.5	
— 1411	10.0-10.5	6760	3.7	3610.0	0.99	4.2	89400	19.8	10.4	11.1	
1411	9.5-10.0	6680	2.2	364.0	0.93	4.5	77100	21.2	9.9	12.4	
Plant 2/3 Area											
— 1183	0.5-1.0	8200	5.9	63.0	1.70	5.2	115000	37.3	14.3	20.1	
1183	0-0.5	4740	8.4	65.6	2.40	6.9	105000	75.5	17.4	38.5	
— 1193	6.0-7.5										
HIGHEST VOC LAB BLANK:											
HIGHEST DILUTED VOC BLANK:											
INORGANIC ave:		57,000	7	420	1	1.7	6,300	52	9	22	
BACKGROUND min:		7,000	<0.1	10	<1	1		1	<0.3	<1	
max:		>100,000	73	1,500	7	4		1,000	70	700	

All Organic concentrations in ug/kg, all inorganic concentrations in mg/kg

Table G-I-2: TCL CHEMICALS DETECTED IN SOILS OF OPERABLE UNIT 3

SAMPLE LOCATION	SAMPLE DEPTH (ft)	Iron	Lead	Magnesium	Manganese	Mercury	Molybdenum	Nickel	Potassium	Silver	Sodium
Maintenance Bldg. W of Plant 8											
– 1234	0-0.5										
Area N of Maintenance Bldg											
– 1316	2.0-2.5	6800	8.2	35100	289			20.6	514		148.00
– 1307	1.5-3.0										
1307	3.0-4.5										
1307	0.5-1.0	15100	32.2	35100	392	0.460		36.7	1770		2360.00
1307	0-0.5	25800	334.0	24900	393	0.650		72.2	1330	4.5	2070.00
– 1308	0-0.5	26900	182.0	42200	550	0.530		67.8	579	2.9	211.00
1308	0.5-1.0	17500	165.0	55100	476	0.180		70.5	487		244.0
– 1317	1.5-2.0	15700	7.2	34500	374			33.6	935		224.00
1317	1.0-1.5	15100	7.7	35600	363			49.3	1040		197.00
Area N of Mg Storage Bldg											
– 1294	2.0-3.0										
Pilot Plant Area											
– 1250	0-0.5	19100	30.3	9740	835	0.340		39.8	999	2.9	150.00
1250	0.5-1.0	18100	15.9	26000	614	1.100		41.9	571		220.00
– 1252	0.5-1.0	22400	26.7	4680	305	0.370		34.7	1240	2.6	2220.00
1252	0-0.5	18100		20200	432	0.500		40.5	2470		2030.00
– 1260	0-0.5	27300	117.0	11400		0.430		35.1	1230		1340.00
1260	0.5-1.0	8180	15.5	20700	296	0.270		29.2	1050	3.1	1550.00
– 1411	10.0-10.5	15300	16.9	20000	487	0.220		25.9	953		1700.00
1411	9.5-10.0	11100	9.3	26600	473	0.240		27.4	1030	2.2	1600.00
Plant 2/3 Area											
– 1183	0.5-1.0	23300	440.0	21400	465	0.730		42.3	956	5.9	160.00
1183	0-0.5	8880	334.0	38600	293	1.300	2.9	50.0	856	17.2	160.00
– 1193	6.0-7.5										
HIGHEST VOC LAB BLANK:											
HIGHEST DILUTED VOC BLANK:											
INORGANIC BACKGROUND	ave:	25,000	17	4,600	640	0.12	0.79	18	12,000	3	7,800
	min:	100	<10	50	<2	0.01	<3	<5			
	max:	100,000	300	50,000	7,000	3.40	15	700			

All Organic [illegible]trations in ug/kg, all inorganic concentrations in mg/kg

80

5200

Table G-I-2: TCL CHEMICALS DETECTED IN SOILS OF OPERABLE UNIT 3

SAMPLE LOCATION	SAMPLE DEPTH (ft)	Thallium	Vanadium	Zinc
Maintenance Bldg. W of Plant 8				
— 1234	0-0.5			
Area N of Maintenance Bldg				
— 1316	2.0-2.5		19.2	23.6
— 1307	1.5-3.0			
1307	3.0-4.5			
1307	0.5-1.0	0.39	26.9	292.0
1307	0-0.5	0.38	24.8	767.0
— 1308	0-0.5		20.6	431.0
1308	0.5-1.0		21.8	324.0
— 1317	1.5-2.0		20.8	37.3
1317	1.0-1.5	0.34	21.5	33.6
Area N of Mg Storage Bldg				
— 1294	2.0-3.0			
Pilot Plant Area				
— 1250	0-0.5		26.5	60.8
1250	0.5-1.0		26.9	42.8
— 1252	0.5-1.0	0.34	18.8	242.0
1252	0-0.5		25.1	219.0
— 1260	0-0.5	0.33	19.6	207.0
1260	0.5-1.0	0.26	17.7	210.0
— 1411	10.0-10.5	0.37	21.8	213.0
1411	9.5-10.0	0.46	21.3	209.0
Plant 2/3 Area				
— 1183	0.5-1.0		30.2	89.0
1183	0-0.5		35.6	247.0
— 1193	6.0-7.5			
HIGHEST VOC LAB BLANK:				
HIGHEST DILUTED VOC BLANK:				
INORGANIC ave:		8.6	66	52
BACKGROUND min:		2	<7	<5
max:		23	300	2,900

All Organic concentrations in ug/kg, all Inorganic concentrations in mg/kg

Table G-I-2: TCL CHEMICALS DETECTED IN SOILS OF OPERABLE UNIT 3

SAMPLE LOCATION	SAMPLE DEPTH (ft)	1,1,2,2-Tetrachloro-ethane	1,1,1-Trichloro-ethane	1,1-Dichloro-ethane	1,1-Dichloro-ethene	1,2-Dichloro-ethene	2-Butanone	2-Methyl-naphthalene
Maintenance Bldg. W of Plant 8								
– 1234	0–0.5							
Area N of Maintenance Bldg								
– 1316	2.0–2.5							
– 1307	1.5–3.0						1100.0	
1307	3.0–4.5			310.0			1200.0	
1307	0.5–1.0		110.0				430.0	
1307	0–0.5		210.0				1100.0	320.0
– 1308	0–0.5						26.0	760.0
1308	0.5–1.0						3.0	
– 1317	1.5–2.0						35.0	
1317	1.0–1.5						7.0	
Area N of Mg Storage Bldg								
– 1294	2.0–3.0		2.0				1.0	
Pilot Plant Area								
– 1250	0–0.5						10.0	
1250	0.5–1.0					2.0	49.0	
– 1252	0.5–1.0				4.0		9.0	
1252	0–0.5						8.0	
– 1260	0–0.5						1.0	
1260	0.5–1.0						4.0	
– 1411	10.0–10.5	350.0				1600.0	2400.0	
1411	9.5–10.0							
Plant 2/3 Area								
– 1183	0.5–1.0						4.0	
1183	0–0.5						4.0	
– 1193	6.0–7.5						10.0	
HIGHEST VOC LAB BLANK:							6.0	
HIGHEST DILUTED VOC BLANK:							880.0	
INORGANIC BACKGROUND ave:								
min:								
max:								

All Organic [illegible]ntrations in ug/kg, all inorganic concentrations in mg/kg

Table G-I-2: TCL CHEMICALS DETECTED IN SOILS OF OPERABLE UNIT 3

SAMPLE LOCATION	SAMPLE DEPTH (ft)	2-Propanone (acetone)	4-Methyl-2-Pentanone	Acenaphthene	Anthracene	Benzene	Benzo(a)-anthracene	Benzo(a)-pyrene	Benzo(b)-fluoranthene
Maintenance Bldg. W of Plant 8									
~ 1234	0-0.5	27.0							
Area N of Maintenance Bldg									
- 1316	2.0-2.5	5.0							
- 1307	1.5-3.0	2500.0							
1307	3.0-4.5	2700.0							
1307	0.5-1.0	70.0							
1307	0-0.5	2300.0	160.0				660.0	640.0	840.0
·· 1308	0-0.5	18.0		4800.0	6200.0		19000.0	24000.0	39000.0
1308	0.5-1.0	8.0		570.0	880.0		2900.0	3700.0	4200.0
- 1317	1.5-2.0								
1317	1.0-1.5	5.0							
Area N of Mg Storage Bldg									
~ 1294	2.0-3.0	9.0							
Pilot Plant Area									
~ 1250	0-0.5	9.0							
1250	0.5-1.0								
~ 1252	0.5-1.0	12.0			60.0	5.0	430.0	320.0	
1252	0-0.5			1600.0	2800.0		5400.0	5100.0	4700.0
~ 1260	0-0.5	6.0		110.0	170.0		660.0	470.0	
1260	0.5-1.0	6.0		110.0	290.0		580.0	520.0	540.0
~ 1411	10.0-10.5		330.0						90.0
1411	9.5-10.0								
Plant 2/3 Area									
~ 1183	0.5-1.0	5.0							
1183	0-0.5	14.0							
~ 1193	6.0-7.5	29.0							
HIGHEST VOC LAB BLANK:		7.0	1.0						
HIGHEST DILUTED VOC BLANK:		1100.0	330.0						
INORGANIC ave:									
BACKGROUND min:									
max:									

All Organic concentrations in ug/kg, all Inorganic concentrations in mg/kg

SECTION 3.0

TARGET CONSTITUENT LIST CHEMICALS DETECTED IN PERCHED WATER

COLLECTED UNDER OU3 RI/FS

Table G-I-3: TCL CHEMICALS DETECTED IN PERCHED GROUNDWATER OF OPERABLE UNIT 3

SAMPLE ID	SAMPLE LOCATION	1,1,1-Trichloro-ethane	1,1-Dichloro-ethane	1,1-Dichloro-ethene	1,2-Dichloro-ethane	1,2-Dichloro-ethene	2,4-Dimethyl-phenol
45659	1149	310	74	460	86	430	
46647	1182		1				
46653	1183						
46654	1183						
45599	1203		4			3	
45607	1206	27	31	9		9	
46748	1441	4	1			10	
46934	1442		1			43	
46935	1442		1			45	
46754	1444		4			92	
46772	1448						
46865	1508		3				
46870	1509	2900	2500	490	19	1500	40
46875	1510						
46880	1511						
46885	1512						
46889	1513						
46895	1514						
46899	1515						

highest blank:
tolerance level:

All concentrations in ug/l

Table G-I-3: TCL CHEMICALS DETECTED IN PERCHED GROUNDWATER OF OPERABLE UNIT 3

SAMPLE ID	SAMPLE LOCATION	2-Butanone	2-Propanone	4-Methyl-2-Pentanone	4-Methyl-phenol	Benzene	Benzoic acid	Benzyl-Alcohol	Carbon disulfide
45659	1149	67	9			1			
46647	1182	3	2						2
46653	1183	3							3
46654	1183	3	4	2					2
45599	1203								
45607	1206		3						
46748	1441	5	3						
46934	1442								
46935	1442		5						
46754	1444	5	8	2					2
46772	1448	17	20						2
46865	1508								
46870	1509		59		15		25	5	
46875	1510								
46880	1511								
46885	1512								
46889	1513								
46895	1514								
46899	1515								
highest blank:		2	16						
tolerance level:									

All concentrations in ug/l

Table G-I-3: TCL CHEMICALS DETECTED IN PERCHED GROUNDWATER OF OPERABLE UNIT 3

SAMPLE ID	SAMPLE LOCATION	Carbon Tetrachloride	Chloroethane	Chloroform	Di-n-butyl-phthalate	Ethyl-benzene	Methylene Chloride	Tetrachloro-ethene
45659	1149	5		26			28	14
46647	1182						8	
46653	1183						7	
46654	1183						5	
45599	1203						3	
45607	1206						2	2
46748	1441				3			5
46934	1442						13	8
46935	1442						15	8
46754	1444						6	2
46772	1448						3	
46865	1508						1	
46870	1509		110			13	26	280
46875	1510							
46880	1511						1	
46885	1512							
46889	1513						1	
46895	1514						1	
46899	1515							
highest blank:					2		5	
tolerance level:								

All concentrations in ug/l

Table G-I-3: TCL CHEMICALS DETECTED IN PERCHED GROUNDWATER OF OPERABLE UNIT 3

SAMPLE ID	SAMPLE LOCATION	Toluene	Total Xylene	Trichloro-ethene	Vinyl Chloride	Bis(2-ethyl-hexyl)phthalate	Aluminum	Antimony
45659	1149			1400			3410	68
46647	1182						182	
46653	1183						112	
46654	1183						118	
45599	1203						102	
45607	1206			2	2		99.4	
46748	1441			6			69.7	
46934	1442			6			96.3	
46935	1442			6			110	
46754	1444			4	6		94.1	
46772	1448						65.8	
46865	1508						91.7	
46870	1509	260	55	98		4	121	
46875	1510						93	
46880	1511						842	
46885	1512						89.3	
46889	1513						110	
46895	1514						137	
46899	1515						162	
highest blank:		1				26		
tolerance level:								

All concentrations in ug/l

Table G-I-3: TCL CHEMICALS DETECTED IN PERCHED GROUNDWATER OF OPERABLE UNIT 3

SAMPLE ID	SAMPLE LOCATION	Arsenic	Barium	Beryllium	Cadmium	Calcium	Chromium	Cobalt	Copper	Iron	Lead
45659	1149		589	34.3	40	976000	818	88.6	91.6	358	4.2
46647	1182		63.6		4.5	88400	57.5		13.4	1500	2.4
46653	1183		48.6		3.6	72300	38.2		13.4	903	
46654	1183		47.3		4	73500	41.8		13.4	916	
45599	1203		47.4		2.7		24.2			47.3	
45607	1206		52.4		2.5	78100	28.2			31.1	3.2
46748	1441		91.7		6.5	110000	24.5			49.7	
46934	1442		56.7		6	105000	37.1		10.5	40.9	
46935	1442		56	2.2	5.9	103000	36.6		10.3	57.4	
46754	1444		89.8		8.7	119000	36.5		10.5	64.2	
46772	1448		64		7.8	100000	34.6			20.9	2.8
46865	1508	2.2	77.1		3.3	105000	25.2			59.2	5.3
46870	1509	2.8	94.6		6.2	155000	35.9		11.7	296	2.6
46875	1510		64.9		5.4	126000	32.2		12.1	38.5	
46880	1511		78.4		3.7	116000	28			555	
46885	1512		116		6.5	136000	31.1		11.5	41.7	
46889	1513		62.4		4.6	106000	26.8			62.2	5
46895	1514		83.4		4.6	98800	24.6			108	
46899	1515		115		5.5	111000	29.6			152	3.5
highest blank:		2.3	27.1		20		19.7		30.4		89
tolerance level:		4	110		11	14685	32		48	4664	8

All concentrations in ug/l

Table G-I-3: TCL CHEMICALS DETECTED IN PERCHED GROUNDWATER OF OPERABLE UNIT 3

SAMPLE ID	SAMPLE LOCATION	Magnesium	Manganese	Mercury	Molybdenum	Nickel	Potassium	Silver	Sodium
45659	1149	251000	1580		44.8	227	4500	264	207000
46647	1182	23800	396	0.27			1140	27.4	12200
46653	1183	15200	8.7	1.8			3600	18.4	5460
46654	1183	15400	7.3	1.9			3570	18	5180
45599	1203		313	0.26		0.26	792	15.9	35800
45607	1206	21600	154	0.5	14.6	21.9	2290	17.3	33900
46748	1441	42500	591		11.4	37.2	2810	15.2	55800
46934	1442	40800	38.7		10.3		307	19.7	43400
46935	1442	40200	42.4			27	262	18.5	42800
46754	1444	59900	9.5			21.7	1300	19.7	66000
46772	1448	49600	118	0.23	16.8	29.4	2190	18.4	27300
46865	1508	30500	1470				1030	17.9	19500
46870	1509	45300	2540			25.6	695	24.3	33600
46875	1510	30700	344				1060	21.6	18500
46880	1511	32000	1220	0.73		20	2380	19.3	12200
46885	1512	52200	794			20.8	2330	21.5	20000
46889	1513	33400	67.3			20.2	597	18.5	21300
46895	1514	33100	74.3				1340	17.9	11800
46899	1515	41800	206			21.6	514	19	26000
highest blank:		5530	25	0.8	53	32			
tolerance level:		56.27	150	0.37	20	30		55	

All concentrations in ug/l

Table G-I-3: TCL CHEMICALS DETECTED IN PERCHED GROUNDWATER OF OPERABLE UNIT 3

SAMPLE ID	SAMPLE LOCATION	Vanadium	Zinc
45659	1149	299	268
46647	1182	23.4	15.4
46653	1183	17.1	15.2
46654	1183	16.5	12.6
45599	1203	12.2	11.5
45607	1206	13	8.3
46748	1441	11.9	24.3
46934	1442	16.1	18.9
46935	1442	15.4	19.7
46754	1444	16.1	22.1
46772	1448	15.5	21.2
46865	1508	14.3	17.9
46870	1509	19.3	11.4
46875	1510	16.1	10.3
46880	1511	14	9.2
46885	1512	16.1	17.7
46889	1513	14	12
46895	1514	12.9	10.5
46899	1515	14.4	29.5
highest blank:			36.8
tolerance level:			

91

All concentrations in ug/l

5200

SECTION 4.0

RADIOCHEMICAL DATA FROM SOIL BORINGS 1175 - 1225

COLLECTED UNDER OU3 RI/FS

ASMT WELL/BORING DRUMMED CUTTINGS SUSPECT AREA DRUMS

Drum Identification No.	Boring/Well No.	Field HNU Detected (Yes/No)	Field RAD Detected (Yes/No)	SAMPLES FROM DRUM Sample number and results received (Yes/No) TOTAL U		TOTAL Th		TCLP		SAMPLES FROM BORING Sample number and results received (Yes/No) TOTAL U		TOTAL Th		TCLP		TEST REQUIRED TOTAL U	TOTAL Th	TCLP
W020-ASI-P011-1170	1170 (B)	NO	YES	NA		NA		NA		NA		NA		NA				
W020-ASI-P011-1173	1173 (W)	NO	YES	NA		NA		NA		NA		NA		NA				
W020-ASI-P011-1174	1174 (W)	NO	YES	NA		NA		NA		15044	Yes	15044	Yes	NA				
W020-ASI-P011-1175	1175 (B)	NO	YES	NA		NA		NA		NA		NA		NA				
W020-ASI-P011-1176	1176 (W)	NO	YES	NA		NA		NA		NA		NA		NA				
W020-ASI-P011-1177	1177 (W)	NO	YES	NA		NA		NA		NA	Yes	NA		NA				
W020-ASI-P011-1178	1178 (W)	NO	YES	NA		NA		NA		16485	Yes	16485	Yes	NA				
	1178 (W)									16504	Yes	16504	Yes					
	1178 (W)									16495	Yes	16495	Yes					
	1178 (W)									16489	Yes	16489	Yes					
W020-ASI-P011-1179	1179 (W)	NO	YES	NA		NA		NA		16507	Yes	16507	Yes	NA				
	1179 (W)									16515	Yes	16515	Yes					
	1179 (W)									16514	Yes	16514	Yes					
	1179 (W)									16525	Yes	16525	Yes					
	1179 (W)									51661	Yes	51661	Yes					
W020-ASI-P011-1180	1180 (W)	NO	YES	NA		NA		NA		16532	Yes	16532	Yes	NA				
	1180 (W)									16538	Yes	16538	Yes					
	1180 (W)									16539	Yes	16539	Yes					
W020-ASI-P011-1181	1181 (W)	NO	YES	NA		NA		NA		16551	Yes	16551	Yes	NA				
W020-ASI-P011-1182	1182 (W)	NO	YES	NA		NA		NA		16574	Yes	16574	Yes	NA				
	1182 (W)									51716	Yes	16576	Yes					
	1182 (W)									16576	Yes	16592	Yes					
	1182 (W)									16592	Yes							
	1182 (W)									16585	Yes							
	1182 (W)									16578	Yes							
W020-ASI-P011-1183	1183 (W)	NO	YES	NA		NA		NA		16596	Yes	16596	Yes	NA				
X W020-ASI-P011-1183	1183 (W)									16598	Yes	16598	Yes					
	1183 (W)									16600	Yes	51745	Yes					
	1183 (W)									51745	Yes							
	1183 (W)									16607	Yes							
	1183 (W)									51736	Yes							
W020-ASI-P011-1185	1185 (W)	NO	YES	NA		NA		NA		16639	Yes	51783	Yes	NA				
	1185 (W)									51783	Yes							
	1185 (W)									16642	Yes							
	1185 (W)									16660	Yes							
	1185 (W)									16649	Yes							
W020-ASI-P011-1186	1186 (W)	NO	YES	NA		NA		NA		16661	Yes	16661	Yes	NA				
	1186 (W)									16681	Yes	16681	Yes					
W020-ASI-P011-1187	1187 (W)	NO	YES	NA		NA		NA		45585	Yes	NA		NA				
W020-ASI-P011-1188	1188 (W)	NO	YES	NA		NA		NA		16705	Yes	16705	Yes	NA				
	1188 (W)									51841	Yes	51841	Yes					
	1188 (W)									16715	Yes	16715	Yes					
	1188 (W)									16709	Yes	16709	Yes					
	1188 (W)									16724	Yes	16724	Yes					
W020-ASI-P011-1189	1189 (W)	NO	YES	NA		NA		NA		16727	Yes	16727	Yes	NA				
	1189 (W)									16729	Yes	16729	Yes					
	1189 (W)									51861	Yes	51861	Yes					
	1189 (W)									16735	Yes	16735	Yes					
	1189 (W)									16745	Yes	16745	Yes					

93

5200

ASVIT WELL/BORING DRUMMED CUTTINGS SUSPECT AREA DRUMS

Drum Identification No.	Boring/Well No.	Field HNU Detected (Yes/No)	Field RAD Detected (Yes/No)	SAMPLES FROM DRUM Sample number and results received (Yes/No) TOTAL U		TOTAL Th		TCLP		SAMPLES FROM BORING Sample number and results received (Yes/No) TOTAL U		TOTAL Th		TCLP		TEST REQUIRED TOTAL U	TOTAL Th	TCLP
W020-ASI-P011-1190	1190 (W)	NO	YES	NA		NA		NA		16749	Yes	16749	Yes	NA				
	1190 (W)									51881	Yes	51881	Yes					
	1190 (W)									16757	Yes	16757	Yes					
	1190 (W)									16751	Yes	16751	Yes					
	1190 (W)									16768	Yes	16768	Yes					
X R020-ASI-P011-1193	1193 (W)	NO	YES	NA		NA		NA		16815	Yes	16815	Yes	NA				
	1193 (W)									16817	Yes	16817	Yes					
	1193 (W)									16823	Yes	16823	Yes					
	1193 (W)									16834	Yes	16834	Yes					
	1193 (W)									51941	Yes	51941	Yes					
W020-ASI-P011-1194	1194 (W)	NO	YES	NA		NA		NA		16837	Yes	16837	Yes	NA				
	1194 (W)									16845	Yes	16845	Yes					
	1194 (W)									16839	Yes	16839	Yes					
	1194 (W)									51960	Yes	51960	Yes					
	1194 (W)									16855	Yes	16855	Yes					
W020-ASI-P011-1195	1195 (W)	NO	YES	NA		NA		NA		16861	Yes	16861	Yes	NA				
	1195 (W)									16880	Yes	16880	Yes					
	1195 (W)									16869	Yes	16869	Yes					
	1195 (W)									51983	Yes	51983	Yes					
W020-ASI-P011-1196	1196 (W)	NO	YES	NA		NA		NA		16881	Yes	16881	Yes	NA				
	1196 (W)									16899	Yes	16899	Yes					
	1196 (W)									16883	Yes	16883	Yes					
	1196 (W)									16889	Yes	16889	Yes					
	1196 (W)									52000	Yes	52000	Yes					
W020-ASI-P011-1197	1197 (W)	NO	YES	NA		NA		NA		16903	Yes	NA		NA				
	1197 (W)									16911	Yes							
	1197 (W)									16922	Yes							
	1197 (W)									16905	Yes							
	1197 (W)									52020	Yes							
W020-ASI-P011-1198	1198 (W)	NO	YES	NA		NA		NA		16925	Yes	16925	Yes	NA				
W020-ASI-P011-1199	1199 (W)	NO	YES	NA		NA		NA		16968	Yes	16968	Yes	NA				
W020-ASI-P011-1200	1200 (W)	NO	YES	NA		NA		NA		NA		NA		NA				
W020-ASI-P011-1201	1201 (W)	NO	YES	NA		NA		NA		16991	Yes	16991	Yes	NA				
W020-ASI-P011-1202	1202 (W)	NO	YES	NA		NA		NA		17013	Yes	17013	Yes	NA				
W020-ASI-P011-1203	1203 (W)	NO	YES	NA		NA		NA		17035	Yes	17035	Yes	NA				
W020-ASI-P011-1204	1204 (W)	NO	YES	NA		NA		NA		17059	Yes	17059	Yes	NA				
	1204 (W)									17077	Yes	17077	Yes					
	1204 (W)									17067	Yes	17067	Yes					
	1204 (W)									17063	Yes	17063	Yes					
W020-ASI-P011-1205	1205 (W)	NO	YES	NA		NA		NA		17079	Yes	17079	Yes	NA				
W020-ASI-P011-1206	1206 (W)	NO	YES	NA		NA		NA		NA		NA		NA				
W020-ASI-P011-1207	1207 (W)	NO	YES	NA		NA		NA		17123	Yes	17123	Yes	NA				
W020-ASI-P011-1208	1208 (W)	NO	YES	NA		NA		NA		17145	Yes	17145	Yes	NA				
	1208 (W)									17155	Yes	17155	Yes					
W020-ASI-P011-1209	1209 (W)	NO	YES	NA		NA		NA		17167	Yes	17167	Yes	NA				
	1209 (W)									17177	Yes	17177	Yes					
W020-ASI-P011-1210	1210 (W)	NO	YES	NA		NA		NA		NA		NA		NA				
W020-ASI-P011-1211	1211 (W)	NO	YES	NA		NA		NA		NA		NA		NA				
W020-ASI-P011-1212	1212 (W)	NO	YES	NA		NA		NA		17233	Yes	17233	Yes	NA				

64

5200

ASMT WELL/BORING DRUMMED CUTTINGS SUSPECT AREA DRUMS

Drum Identification No.	Boring/Well No.	Field HNU Detected (Yes/No)	Field RAD Detected (Yes/No)	SAMPLES FROM DRUM Sample number and results received (Yes/No) TOTAL U		TOTAL Th		TCLP		SAMPLES FROM BORING Sample number and results received (Yes/No) TOTAL U		TOTAL Th		TCLP		TEST REQUIRED TOTAL U	TOTAL Th	TCLP
	1212 (W)									17234	Yes	17234	Yes					
	1212 (W)									17235	Yes	17235	Yes					
	1212 (W)									17237	Yes	17237	Yes					
	1212 (W)									17241	Yes	17241	Yes					
	1212 (W)									52241	Yes	52241	Yes					
	1212 (W)									17252	Yes	17252	Yes					
W020-ASI-P011-1213	1213 (W)	NO	YES	NA		NA		NA		17267	Yes	17267	Yes	NA				
W020-ASI-P011-1214	1214 (W)	NO	YES	NA		NA		NA		17277	Yes	17277	Yes	NA				
	1214 (W)									17284	Yes	17284	Yes					
	1214 (W)									17295	Yes	17295	Yes					
	1214 (W)									52280	Yes	52280	Yes					
	1214 (W)									17278	Yes	17278	Yes					
	1214 (W)									17281	Yes	17281	Yes					
W020-ASI-P011-1215	1215 (W)	NO	YES	NA		NA		NA		17299	Yes	NA		NA				
	1215 (W)									52303	Yes							
	1215 (W)									17320	Yes							
	1215 (W)									17309	Yes							
	1215 (W)									17303	Yes							
W020-ASI-P011-1216	1216 (W)	NO	YES	NA		NA		NA		17321	Yes	NA		NA				
	1216 (W)									17329	Yes							
	1216 (W)									17339	Yes							
	1216 (W)									17323	Yes							
	1216 (W)									52321	Yes							
W020-ASI-P011-1217	1217 (W)	NO	YES	NA		NA		NA		17343	Yes	17343	Yes	NA				
	1217 (W)									17353	Yes	17353	Yes					
	1217 (W)									17347	Yes	17347	Yes					
	1217 (W)									52342	Yes	52342	Yes					
	1217 (W)									17363	Yes	17363	Yes					
W020-ASI-P011-1218	1218 (W)	NO	YES	NA		NA		NA		NA		NA		NA				
W020-ASI-P011-1219	1219 (W)	NO	YES	NA		NA		NA		NA		NA		NA				
W020-ASI-P011-1220	1220 (W)	NO	YES	NA		NA		NA		17409	Yes	17409	Yes	NA				
	1220 (W)									17419	Yes	17419	Yes					
W020-ASI-P011-1221	1221 (W)	NO	YES	NA		NA		NA		17431	Yes	17431	Yes	NA				
	1221 (W)									17434	Yes	17434	Yes					
	1221 (W)									17440	Yes	17440	Yes					
	1221 (W)									52379	Yes	52379	Yes					
	1221 (W)									17450	Yes	17450	Yes					
	1221 (W)									17433	Yes	17433	Yes					
W020-ASI-P011-1223	1223 (W)	NO	YES	NA		NA		NA		17475	Yes	17475	Yes	NA				
	1223 (W)									17493	Yes	17493	Yes					
	1223 (W)									17483	Yes	17483	Yes					
	1223 (W)									17476	Yes	17476	Yes					
	1223 (W)									52421	Yes	17477	Yes					
	1223 (W)									17477	Yes							
W020-ASI-P011-1224	1224 (W)	NO	YES	NA		NA		NA		17497	Yes	17497	Yes	NA				
W020-ASI-P011-1225	1225 (W)	NO	YES	NA		NA		NA		17510	Yes	17510	Yes	NA				
	1225 (W)									52441	Yes	52441	Yes					
	1225 (W)									17538	Yes	17538	Yes					
	1225 (W)									17523	Yes	17523	Yes					

95

-5200

ASNT WELL/BORING DRUMMED CUTTINGS SUSPECT AREA DRUMS

Drum Identification No.	Boring/Well No.	Field HNU Detected (Yes/No)	Field RAD Detected (Yes/No)	SAMPLES FROM DRUM Sample number and results received (Yes/No) TOTAL U		TOTAL Th		TCLP		SAMPLES FROM BORING Sample number and results received (Yes/No) TOTAL U		TOTAL Th		TCLP		TEST REQUIRED TOTAL U	TOTAL Th	TCLP
	1225 (W)									17527	Yes	17527	Yes					
W020-ASI-P011-1226	1226 (W)	NO	YES	NA		NA		NA		NA		NA		NA				
W020-ASI-P011-1227	1227 (W)	NO	YES	NA		NA		NA		NA		NA		NA				
W020-ASI-P011-1228	1228 (W)	NO	YES	NA		NA		NA		NA		NA		NA				
W020-ASI-P011-1229	1229 (W)	NO	YES	NA		NA		NA		NA		NA		NA				
W020-ASI-P011-1230	1230 (W)	NO	YES	NA		NA		NA		NA		NA		NA				
W020-ASI-P011-1232	1232 (W)	NO	YES	NA		NA		NA		NA		NA		NA				
	1232 (W)									17677	Yes	17677	Yes					
	1232 (W)									52532	Yes	52532	Yes					
	1232 (W)									17691	Yes	17691	Yes					
	1232 (W)									52521	Yes	52521	Yes					
	1232 (W)									17681	Yes	17681	Yes					
	1232 (W)									52531	Yes	52531	Yes					
	1232 (W)									NA		NA		NA				
W020-ASI-P011-1233	1233 (W)	NO	YES	NA		NA		NA		17717	Yes	17717	Yes	NA				
W020-ASI-P011-1234	1234 (W)	NO	YES	NA		NA		NA		17718	Yes	17718	Yes					
	1234 (W)									17761	Yes	17761	Yes	NA				
W020-ASI-P011-1236	1236 (W)	NO	YES	NA		NA		NA		17773	Yes	17773	Yes					
	1236 (W)									17767	Yes	17767	Yes					
	1236 (W)									17783	Yes	NA		NA				
W020-ASI-P011-1237	1237 (W)	NO	YES	NA		NA		NA		17784	Yes							
	1237 (W)									17805	Yes	17826	Yes	NA				
W020-ASI-P011-1238	1238 (B)	NO	YES	NA		NA		NA		17808	Yes	50765	Yes					
	1238 (B)									17826	Yes							
	1238 (B)									50765	Yes							
	1238 (B)									NA		NA		NA				
W020-ASI-P011-1239	1239 (W)	NO	YES	NA		NA		NA		17871	Yes	17871	Yes	NA				
W020-ASI-P011-1241	1241 (W)	NO	YES	NA		NA		NA		17893	Yes	17893	Yes	NA				
W020-ASI-P011-1242	1242 (W)	NO	YES	NA		NA		NA		17915	Yes	17915	Yes	NA				
W020-ASI-P011-1243	1243 (W)	NO	YES	NA		NA		NA		17937	Yes	17937	Yes	NA				
W020-ASI-P011-1244	1244 (W)	NO	YES	NA		NA		NA		17959	Yes	17959	Yes	NA				
W020-ASI-P011-1245	1245 (W)	NO	YES	NA		NA		NA		52603	Yes	17963	Yes					
	1245 (W)									17963	Yes	17960	Yes					
	1245 (W)									17960	Yes	17980	Yes					
	1245 (W)									17980	Yes	17969	Yes					
	1245 (W)									17969	Yes							
	1245 (W)									17981	Yes	18002	Yes	NA				
W020-ASI-P011-1246	1246 (W)	NO	YES	NA		NA		NA		17982	Yes							
	1246 (W)									18002	Yes							
	1246 (W)									18003	Yes	18003	Yes	NA				
W020-ASI-P011-1247	1247 (W)	NO	YES	52653	Yes	NA		52652	Yes	18013	Yes	18004	Yes					
R020-ASI-P011-1247	1247 (W)									52640	Yes							
	1247 (W)									18023	Yes							
	1247 (W)									18004	Yes							
	1247 (W)									18007	Yes							
	1247 (W)									18047	Yes	18047	Yes	NA				
W020-ASI-P011-1249	1249 (W)	NO	YES	NA		NA		NA		18048	Yes	18048	Yes					
	1249 (W)									18070	Yes	18070	Yes	NA				
W020-ASI-P011-1250	1250 (W)	NO	YES	NA		NA		NA		52705	Yes	52705	Yes					
	1250 (W)									18081	Yes	18081	Yes					
	1250 (W)																	

96

5200

ASI/I. WELL/BORING DRUMMED CUTTINGS SPECT AREA DRUMS

Drum Identification No.	Boring/Well No	Field HNU Detected (Yes/No)	Field RAD Detected (Yes/No)	SAMPLES FROM DRUM Sample number and results received (Yes/No)			SAMPLES FROM BORING Sample number and results received (Yes/No)			Variance No.
				TOTAL U	TOTAL Th	TCLP	TOTAL U	TOTAL Th	TCLP	
W020-ASI-P011-1176	1176 (W)	NO	YES	NA	NA	NA	NA	NA	NA	N/A

97

-2200

ASI/IT WELL/BORING DRUMMED CUTTINGS SUSPECT AREA DRUMS

Drum Identification No.	Boring/Well No	Field HNU Detected (Yes/No)	Field RAD Detected (Yes/No)	SAMPLES FROM DRUM: Sample number and results received (Yes/No)			SAMPLES FROM BORING: Sample number and results received (Yes/No)				Variance No.
				TOTAL U	TOTAL Th	TCLP	TOTAL U		TOTAL Th	TCLP	
W020-ASI-P011-1177	1177 (W)	NO	YES	NA	NA	NA	NA	Yes	NA	NA	N/A

98

5200

ASI/I WELL/BORING DRUMMED CUTTINGS SPECT AREA DRUMS

Drum Identification No.	Boring/Well No	Field INU Detected (Yes/No)	Field RAD Detected (Yes/No)	SAMPLES FROM DRUM: Sample number and results received (Yes/No) TOTAL U	TOTAL Th	TCLP	SAMPLES FROM BORING: Sample number and results received (Yes/No) TOTAL U	TOTAL Th	TCLP	Variance No.
W020-ASI-P011-1178	1178 (W)	NO	YES	NA	NA	NA	16485 Yes	16485 Yes	NA	N/A
	1178 (W)						16504 Yes	16504 Yes		
	1178 (W)						16495 Yes	16495 Yes		
	1178 (W)						16489 Yes	16489 Yes		

99

-5200

WELL-ID	SAMPLE	COLL-DAT	RTEST-RAD	RESULTS-RAD	RAD-UNIT	SIGMA-2	SAMP-DEPTH
1178	016485	10/07/89	U-TOTAL	34	UG/G	6	1.0 - 1.5
1178	016485	10/07/89	TH-TOTAL	3.72	UG/G	2.04	1.0 - 1.5
1178	016489	10/07/89	U-TOTAL	23	UG/G	4	3.0 - 3.5
1178	016489	10/07/89	TH-TOTAL	3.71	UG/G	2.05	3.0 - 3.5
1178	016495	10/07/89	U-TOTAL	39	UG/G	7	6.0 - 6.5
1178	016495	10/07/89	TH-TOTAL	9.50	UG/G	2.41	6.0 - 6.5
1178	016504	10/07/89	U-TOTAL	12	UG/G	3	10.5 - 11.0
1178	016504	10/07/89	TH-TOTAL	5.23	UG/G	2.43	10.5 - 11.0
1178	045378	10/18/89	U-TOTAL	999	UG/L	146	N/A
1178	045380	10/18/89	U-TOTAL	1175	UG/L	172	N/A
1178	045718	07/27/90	U-TOTAL	142	UG/L	20	N/A

ASI/T ELL/BORING DRUMMED CUTTINGS SPECT AREA DRUMS

Drum Identification No.	Boring/Well No	Field HNU Detected (Yes/No)	Field RAD Detected (Yes/No)	SAMPLES FROM DRUM: Sample number and results received (Yes/No) TOTAL U	TOTAL Th	TCLP	SAMPLES FROM BORING: Sample number and results received (Yes/No) TOTAL U	TOTAL Th	TCLP	Variance No.
W020-ASI-P011-1179	1179 (W)	NO	YES	NA	NA	NA	16507 Yes	16507 Yes	NA	N/A
	1179 (W)						16515 Yes	16515 Yes		
	1179 (W)						16514 Yes	16514 Yes		
	1179 (W)						16525 Yes	16525 Yes		
	1179 (W)						51661 Yes	51661 Yes		

101

5200

WELL-ID	SAMPLE	COLL-DAT	RTEST-RAD	RESULTS-RAD	RAD-UNIT	SIGMA-2	SAMP-DEPTH
1179	016507	10/08/89	U-TOTAL	1916	UG/G	289	1.0 - 1.5
1179	016507	10/08/89	TH-TOTAL	62.2	UG/G	10	1.0 - 1.5
1179	016514	10/08/89	U-TOTAL	285	UG/G	44	4.5 - 5.0
1179	016514	10/08/89	TH-TOTAL	13.5	UG/G	3.3	4.5 - 5.0
1179	016515	10/08/89	U-TOTAL	254	UG/G	27	5.0 - 5.5
1179	016515	10/08/89	TH-TOTAL	11.0	UG/G	3.7	5.0 - 5.5
1179	016525	10/08/89	U-TOTAL	41	UG/G	7	10.0 - 10.5
1179	016525	10/08/89	TH-TOTAL	7.24	UG/G	3.45	10.0 - 10.5
1179	045374	10/18/89	U-TOTAL	568	UG/L	89	N/A
1179	045376	01/24/90	U-TOTAL	307	UG/L	55	N/A
1179	051661	10/08/89	U-TOTAL	152	UG/G	17	15.0 - 15.5
1179	051661	10/08/89	TH-TOTAL	7.82	UG/G	2.97	15.0 - 15.5

ASI/ WELL/BORING DRUMMED CUTTINGS USPECT AREA DRUMS

Drum Identification No.	Boring/Well No	Field HNU Detected (Yes/No)	Field RAD Detected (Yes/No)	SAMPLES FROM DRUM: Sample number and results received (Yes/No) TOTAL U	TOTAL Th	TCLP	SAMPLES FROM BORING: Sample number and results received (Yes/No) TOTAL U	TOTAL Th	TCLP	Variance No.
W020-ASI-P011-1180	1180 (W) 1180 (W) 1180 (W)	NO	YES	NA	NA	NA	16532 Yes 16538 Yes 16539 Yes	16532 Yes 16538 Yes 16539 Yes	NA	N/A

WELL-ID	SAMPLE	COLL-DAT	RTEST-RAD	RESULTS-RAD	RAD-UNIT	SIGMA-2	SAMP-DEPTH
1180	016532	01/05/90	U-TOTAL	106	UG/G	17	1.5 - 2.0
1180	016532	01/05/90	TH-TOTAL	10.5	UG/G	4.8	1.5 - 2.0
1180	016538	01/05/90	U-TOTAL	148	UG/G	23	4.5 - 5.0
1180	016538	01/05/90	TH-TOTAL	2.19	UG/G	1.50	4.5 - 5.0
1180	016539	01/05/90	U-TOTAL	160	UG/G	17	5.0 - 5.5
1180	016539	01/05/90	TH-TOTAL	7.36	UG/G	2.45	5.0 - 5.5
1180	046800	02/16/90	U-TOTAL	11100	UG/L	1600	N/A
1180	046801	06/30/90	U-TOTAL	3600	UG/L	497	N/A

ASI/IT LL/BORING DRUMMED CUTTINGS PECT AREA DRUMS

Drum Identification No.	Boring/Well No	Field HNU Detected (Yes/No)	Field RAD Detected (Yes/No)	SAMPLES FROM DRUM: Sample number and results received (Yes/No) TOTAL U	TOTAL Th	TCLP	SAMPLES FROM BORING: Sample number and results received (Yes/No) TOTAL U	TOTAL Th	TCLP	Variance No.
W020-ASI-P011-1181	1181 (W)	NO	YES	NA	NA	NA	16551 Yes	16551 Yes	NA	N/A

WELL-ID	SAMPLE	COLL-DAT	RTEST-RAD	RESULTS-RAD	RAD-UNIT	SIGMA-2	SAMP-DEPTH
1191	016551	06/03/89	U-TOTAL	296	UG/G	46	0.0 - 0.5
1191	016551	06/03/89	TH-TOTAL	11.3	UG/G	6.0	0.0 - 0.5
1181	045218	10/19/89	U-TOTAL	184	UG/L	28	N/A

5200

109

ASI/IT ELL/BORING DRUMMED CUTTINGS SPECT AREA DRUMS

Drum Identification No.	Boring/Well No	Field HNU Detected (Yes/No)	Field RAD Detected (Yes/No)	SAMPLES FROM DRUM Sample number and results received (Yes/No) TOTAL U	TOTAL Th	TCLP	SAMPLES FROM BORING Sample number and results received (Yes/No) TOTAL U	TOTAL Th	TCLP	Variance No.
W020-ASI-P011-1182	1182 (W)	NO	YES	NA	NA	NA	16574 Yes	16574 Yes	NA	N/A
	1182 (W)						51716 Yes	16576 Yes		
	1182 (W)						16576 Yes	16592 Yes		
	1182 (W)						16592 Yes			
	1182 (W)						16585 Yes			
	1182 (W)						16578 Yes			

107

5200

WELL-ID	SAMPLE	COLL-DAT	RTEST-RAD	RESULTS-RAD	RAD-UNIT	SIGMA-2	SAMP-DEPTH
1182	016574	10/22/89	U-TOTAL	3500	UG/G	360	0.0 - 0.5
1182	016574	10/22/89	TH-TOTAL	20.7	UG/G	3.4	0.0 - 0.5
1182	016576	10/22/89	U-TOTAL	895	UG/G	135	0.5 - 1.0
1182	016576	10/22/89	TH-TOTAL	14.6	UG/G	2.4	0.5 - 1.0
1182	016578	10/22/89	U-TOTAL	104	UG/G	16	1.5 - 2.0
1182	016585	10/22/89	U-TOTAL	187	UG/G	29	5.0 - 5.5
1182	016592	10/22/89	U-TOTAL	210	UG/G	22	8.5 - 9.0
1182	016592	10/22/89	TH-TOTAL	2.92	UG/G	1.66	8.5 - 9.0
1182	046644	11/01/89	U-TOTAL	9747	UG/L	1284	N/A
1182	046646	01/24/90	U-TOTAL	9820	UG/L	1380	N/A
1182	051716	10/22/89	U-TOTAL	114	UG/G	18	10.5 - 11.0

WELL-ID	SAMPLE	COLL-DAT	RTEST-RAD	RESULTS-RAD	RAD-UNIT	SIGMA-2	SAMP-DEP
1208	017145	05/31/89	U-TOTAL	410	UG/G	43	0.0 - 0.5
1208	017145	05/31/89	TH-TOTAL	14.9	UG/G	6.8	0.0 - 0.5
1208	017155	05/31/89	U-TOTAL	182	UG/G	29	5.0 - 5.5
1208	017155	05/31/89	TH-TOTAL	4.1	UG/G		5.0 - 5.5
1208	045729	10/22/89	U-TOTAL	9330	UG/L	1270	N/A
1208	066910	07/16/90	U-TOTAL	1120	UG/L	150	12.4
1208	066910	07/16/90	TH-TOTAL	24.9	UG/L	9.5	12.4

ASI/IT ELL/BORING DRUMMED CUTTINGS S PECT AREA DRUMS

Drum Identification No.	Boring/Well No	Field HNU Detected (Yes/No)	Field RAD Detected (Yes/No)	SAMPLES FROM DRUM Sample number and results received (Yes/No) TOTAL U	TOTAL Th	TCLP	SAMPLES FROM BORING Sample number and results received (Yes/No) TOTAL U	TOTAL Th	TCLP	Variance No.
W020-ASI-P011-1208	1208 (W) 1208 (W)	NO	YES	NA	NA	NA	17145 Yes 17155 Yes	17145 Yes 17155 Yes	NA	N/A

5200

110

WELL-ID	SAMPLE COLL-DAT	RTEST-RAD	RESULTS-RAD	RAD-UNIT	SIGMA-2	SAMP-DEPTH
1207	017123 05/15/89	U-TOTAL	230	UG/G	36	0.0 - 0.5
1207	017123 05/15/89	TH-TOTAL	25.6	UG/G	8.9	0.0 - 0.5
1207	045609 10/22/89	U-TOTAL	468	UG/L	66	N/A

ASI/IT ELL/BORING DRUMMED CUTTINGS SPECT AREA DRUMS

Drum Identification No.	Boring/Well No	Field HNU Detected (Yes/No)	Field RAD Detected (Yes/No)	SAMPLES FROM DRUM Sample number and results received (Yes/No) TOTAL U	TOTAL Th	TCLP	SAMPLES FROM BORING Sample number and results received (Yes/No) TOTAL U	TOTAL Th	TCLP	Variance No.
W020-ASI-P011-1207	1207 (W)	NO	YES	NA	NA	NA	17123 Yes	17123 Yes	NA	N/A

112

5200

ASI/IT WELL/BORING DRUMMED CUTTINGS SUSPECT AREA DRUMS

Drum Identification No.	Boring/Well No	Field HNU Detected (Yes/No)	Field RAD Detected (Yes/No)	SAMPLES FROM DRUM Sample number and results received (Yes/No) TOTAL U	TOTAL Th	TCLP	SAMPLES FROM BORING Sample number and results received (Yes/No) TOTAL U	TOTAL Th	TCLP	Variance No.
W020-ASI-P011-1206	1206 (W)	NO	YES	NA	NA	NA	NA	NA	NA	N/A

WELL-ID	SAMPLE COLL-DAT	RTEST-RAD	ULTS-RAD	RAD-UNIT	SIGMA-2	SAMP-D
1205	017079 06/03/89	U-TOTAL	178	UG/G	29	0.0 - 0.5
1205	017079 06/03/89	TH-TOTAL	12.7	UG/G	6.5	0.0 - 0.5
1205	045220 07/29/90	U-TOTAL	307	UG/L	43	N/A

ASI/IT WELL/BORING DRUMMED CUTTINGS SUSPECT AREA DRUMS

Drum Identification No.	Boring/Well No	Field HNU Detected (Yes/No)	Field RAD Detected (Yes/No)	SAMPLES FROM DRUM Sample number and results received (Yes/No) TOTAL U	TOTAL Th	TCLP	SAMPLES FROM BORING Sample number and results received (Yes/No) TOTAL U	TOTAL Th	TCLP	Variance No.
W020-ASI-P011-1205	1205 (W)	NO	YES	NA	NA	NA	17079 Yes	17079 Yes	NA	N/A

115

5200

WE ID	SAMPLE	COLL-DAT	RTEST-RAD	RESULTS-RAD	RAD-UNIT	SIGMA-2	SAMP-DEPTH
1204	017059	01/04/90	U-TOTAL	10.2	UG/G	3.3	1.0 - 1.5
1204	017059	01/04/90	TH-TOTAL	4.56	UG/G	2.05	1.0 - 1.5
1204	017063	01/04/90	U-TOTAL	4.72	UG/G	3.35	3.0 - 3.5
1204	017063	01/04/90	TH-TOTAL	9.22	UG/G	2.74	3.0 - 3.5
1204	017067	01/04/90	U-TOTAL	3.63	UG/G	2.99	5.0 - 5.5
1204	017067	01/04/90	TH-TOTAL	9.38	UG/G	3.66	5.0 - 5.5
1204	017077	01/04/90	U-TOTAL	60.3	UG/G	8.1	10.0 - 10.5
1204	017077	01/04/90	TH-TOTAL	7.17	UG/G	3.42	10.0 - 10.5
1204	046806	01/22/90	U-TOTAL	4200	UG/L	600	N/A
1204	046807	07/02/90	U-TOTAL	1780	UG/L	235	N/A

ASI/IT WELL/BORING DRUMMED CUTTINGS SUSPECT AREA DRUMS

Drum Identification No.	Boring/Well No	Field HNU Detected (Yes/No)	Field RAD Detected (Yes/No)	SAMPLES FROM DRUM Sample number and results received (Yes/No) TOTAL U	TOTAL Th	TCLP	SAMPLES FROM BORING Sample number and results received (Yes/No) TOTAL U	TOTAL Th	TCLP	Variance No.
W020-ASI-P011-1204	1204 (W)	NO	YES	NA	NA	NA	17059 Yes	17059 Yes	NA	N/A
	1204 (W)						17077 Yes	17077 Yes		
	1204 (W)						17067 Yes	17067 Yes		
	1204 (W)						17063 Yes	17063 Yes		

WEL ID	SAMPLE COLL-DAT	RTEST-RAD	ULTS-RAD	RAD-UNIT	SIGMA-2	SAMP-D
1203	017035 05/24/89	U-TOTAL	354	UG/G	38	0.0 - 0.5
1203	017035 05/24/89	TH-TOTAL	6.67	UG/G	4.2	0.0 - 0.5
1203	045160 10/20/89	U-TOTAL	54	UG/L	6	N/A

118

5200

ASI/IT WELL/BORING DRUMMED CUTTINGS SUSPECT AREA DRUMS

Drum Identification No.	Boring/Well No	Field HNU Detected (Yes/No)	Field RAD Detected (Yes/No)	SAMPLES FROM DRUM Sample number and results received (Yes/No)			SAMPLES FROM BORING Sample number and results received (Yes/No)			Variance No.
				TOTAL U	TOTAL Th	TCLP	TOTAL U	TOTAL Th	TCLP	
W020-ASI-P011-1203	1203 (W)	NO	YES	NA	NA	NA	17035 Yes	17035 Yes	NA	N/A

WELL ID	SAMPLE COLL-DAT	RTEST-RAD	RESULTS-RAD	RAD-UNIT	SIGMA-2	SAMP-DEPTH
1202	017013 05/22/89	U-TOTAL	119	UG/G	19	0.0 - 0.5
1202	017013 05/22/89	TH-TOTAL	5.9	UG/G		0.0 - 0.5
1202	045186 10/20/89	U-TOTAL	2110	UG/L	290	N/A

ASI/IT WELL/BORING DRUMMED CUTTINGS SUSPECT AREA DRUMS

Drum Identification No.	Boring/Well No	Field HNU Detected (Yes/No)	Field RAD Detected (Yes/No)	SAMPLES FROM DRUM: Sample number and results received (Yes/No) TOTAL U	TOTAL Th	TCLP	SAMPLES FROM BORING: Sample number and results received (Yes/No) TOTAL U	TOTAL Th	TCLP	Variance No.
W020-ASI-P011-1202	1202 (W)	NO	YES	NA	NA	NA	17013 Yes	17013 Yes	NA	N/A

WELL ID	SAMPLE	COLL-DAT	RTEST-RAD	RESULTS-RAD	RAD-UNIT	SIGMA-2	SAMP-DEPTH
1201	016991	05/24/89	U-TOTAL	181	UG/G	29	0.0 - 0.5
1201	016991	05/24/89	TH-TOTAL	14.8	UG/G	6.7	0.0 - 0.5
1201	045184	10/20/89	U-TOTAL	412	UG/L	66	N/A

ASI/IT WELL/BORING DRUMMED CUTTINGS SUSPECT AREA DRUMS

Drum Identification No.	Boring/Well No	Field HNU Detected (Yes/No)	Field RAD Detected (Yes/No)	SAMPLES FROM DRUM Sample number and results received (Yes/No) TOTAL U	TOTAL Th	TCLP	SAMPLES FROM BORING Sample number and results received (Yes/No) TOTAL U	TOTAL Th	TCLP	Variance No.
W020-ASI-P011-1201	1201 (W)	NO	YES	NA	NA	NA	16991 Yes	16991 Yes	NA	N/A

5200

ASI/IT ELL/BORING DRUMMED CUTTINGS PECT AREA DRUMS

Drum Identification No.	Boring/Well No	Field HNU Detected (Yes/No)	Field RAD Detected (Yes/No)	SAMPLES FROM DRUM: Sample number and results received (Yes/No) TOTAL U	TOTAL Th	TCLP	SAMPLES FROM BORING: Sample number and results received (Yes/No) TOTAL U	TOTAL Th	TCLP	Variance No.
W020-ASI-P011-1200	1200 (W)	NO	YES	NA	NA	NA	NA	NA	NA	N/A

WELL-ID	SAMPLE	COLL-DAT	RTEST-RAD	RESULTS-RAD	RAD-UNIT	SIGMA-2	SAMP-DEPTH
1199	016968	05/25/89	U-TOTAL	376	UG/G	40	10.5 - 11.0
1199	016968	05/25/89	TH-TOTAL	8.75	UG/G	5.25	10.5 - 11.0
1199	045180	10/19/89	U-TOTAL	20300	UG/L	2800	N/A
1199	066908	07/16/90	U-TOTAL	39700	UG/L	5300	12.1
1199	066908	07/16/90	TH-TOTAL	26.2	UG/L	10.2	12.1

ASI/I ELL/BORING DRUMMED CUTTINGS SPECT AREA DRUMS

Drum Identification No.	Boring/Well No	Field FINU Detected (Yes/No)	Field RAD Detected (Yes/No)	SAMPLES FROM DRUM: Sample number and results received (Yes/No) TOTAL U	TOTAL Th	TCLP	SAMPLES FROM BORING: Sample number and results received (Yes/No) TOTAL U	TOTAL Th	TCLP	Variance No.
W020-ASI-P011-1199	1199 (W)	NO	YES	NA	NA	NA	16968 Yes	16968 Yes	NA	N/A

126

5200

WELL-ID	SAMPLE	COLL-DAT	RTEST-RAD	RESULTS-RAD	RAD-UNIT	SIGMA-2	SAMP-DEPTH
1198	016925	06/02/89	U-TOTAL	172	UG/G	27	0.0 - 0.5
1198	016925	06/02/89	TH-TOTAL	13.8	UG/G	5.8	0.0 - 0.5

5200

121

ASI/I ELL/BORING DRUMMED CUTTINGS SPECT AREA DRUMS

Drum Identification No.	Boring/Well No	Field TNU Detected (Yes/No)	Field RAD Detected (Yes/No)	SAMPLES FROM DRUM Sample number and results received (Yes/No) TOTAL U	TOTAL Th	TCLP	SAMPLES FROM BORING Sample number and results received (Yes/No) TOTAL U	TOTAL Th	TCLP	Variance No.
W020-ASI-P011-1198	1198 (W)	NO	YES	NA	NA	NA	16925 Yes	16925 Yes	NA	N/A

128

5200

WELL-ID	SAMPLE	COLL-DAT	RTEST-RAD	RESULTS-RAD	RAD-UNIT	SIGMA-2	SAMP-DEPTH
1197	016903	11/05/89	U-TOTAL	8.84	UG/G	2.47	1.0 - 1.5
1197	016905	11/05/89	U-TOTAL	4.50	UG/G	1.92	2.0 - 2.5
1197	016911	11/05/89	U-TOTAL	6.46	UG/G	2.20	5.0 - 5.5
1197	016922	11/05/89	U-TOTAL	3.82	UG/G	1.96	10.5 - 11.0
1197	046692	01/21/90	U-TOTAL	36900	UG/L	5000	N/A
1197	046693	07/31/90	U-TOTAL	4915	UG/L	643	N/A
1197	052020	11/05/89	U-TOTAL	23.3	UG/G	4.1	14.5 - 15.0
1197	066906	07/31/90	TH-TOTAL	26	UG/L		13.0
1197	066906	07/31/90	U-TOTAL	25431	UG/L	5642	13.0

ASI/IT WELL/BORING DRUMMED CUTTINGS SUSPECT AREA DRUMS

Drum Identification No.	Boring/Well No	Field TINU Detected (Yes/No)	Field RAD Detected (Yes/No)	SAMPLES FROM DRUM: Sample number and results received (Yes/No) TOTAL U	TOTAL Th	TCLP	SAMPLES FROM BORING: Sample number and results received (Yes/No) TOTAL U	TOTAL Th	TCLP	Variance No.
W020-ASI-P011-1197	1197 (W)	NO	YES	NA	NA	NA	16903 Yes	NA	NA	N/A
	1197 (W)						16911 Yes			
	1197 (W)						16922 Yes			
	1197 (W)						16905 Yes			
	1197 (W)						52020 Yes			

WELL-ID	SAMPLE	COLL-DAT	RTEST-RAD	RESULTS-RAD	RAD-UNIT	SIGMA-2	SAMP-DEPTH
1196	016881	11/08/89	U-TOTAL	14.1	UG/G	3.0	1.0 - 1.5
1196	016881	11/08/89	TH-TOTAL	13.0	UG/G	5.1	1.0 - 1.5
1196	016883	11/08/89	U-TOTAL	4.09	UG/G	1.99	2.0 - 2.5
1196	016883	11/08/89	TH-TOTAL	9.66	UG/G	3.37	2.0 - 2.5
1196	016889	11/08/89	U-TOTAL	5.0	UG/G		5.0 - 5.5
1196	016889	11/08/89	TH-TOTAL	13.7	UG/G	4.0	5.0 - 5.5
1196	016899	11/08/89	U-TOTAL	157	UG/G	24	10.0 - 10.5
1196	016899	11/08/89	TH-TOTAL	8.62	UG/G	3.17	10.0 - 10.5
1196	046698	01/21/90	U-TOTAL	14900	UG/L	2090	N/A
1196	046699	07/31/90	U-TOTAL	5780	UG/L	748	N/A
1196	052000	11/08/89	U-TOTAL	17.6	UG/G	3.4	14.5 - 15.0
1196	052000	11/08/89	TH-TOTAL	6.80	UG/G	2.81	14.5 - 15.0
1196	066905	07/31/90	TH-TOTAL	3.6	UG/L		13.0
1196	066905	07/31/90	U-TOTAL	10275	UG/L	1398	13.0

ASI/I ELL/BORING DRUMMED CUTTINGS SPECT AREA DRUMS

Drum Identification No.	Boring/Well No	Field HNU Detected (Yes/No)	Field RAD Detected (Yes/No)	SAMPLES FROM DRUM Sample number and results received (Yes/No) TOTAL U	TOTAL Th	TCLP	SAMPLES FROM BORING Sample number and results received (Yes/No) TOTAL U	TOTAL Th	TCLP	Variance No.
W020-ASI-P011-1196	1196 (W)	NO	YES	NA	NA	NA	16881 Yes	16881 Yes	NA	N/A
	1196 (W)						16899 Yes	16899 Yes		
	1196 (W)						16883 Yes	16883 Yes		
	1196 (W)						16889 Yes	16889 Yes		
	1196 (W)						52000 Yes	52000 Yes		

132

5200

WELL-ID	SAMPLE	COLL-DAT	RTEST-RAD	RESULTS-RAD	RAD-UNIT	SIGMA-2	SAMP-DEPTH
1195	016861	11/14/89	U-TOTAL	34.8	UG/G	6.3	1.0 - 1.5
1195	016861	11/14/89	TH-TOTAL	6.66	UG/G	3.20	1.0 - 1.5
1195	016869	11/14/89	U-TOTAL	4.90	UG/G	2.77	5.0 - 5.5
1195	016869	11/14/89	TH-TOTAL	8.67	UG/G	2.89	5.0 - 5.5
1195	016880	11/14/89	U-TOTAL	110	UG/G	17	10.5 - 11.0
1195	016880	11/14/89	TH-TOTAL	7.02	UG/G	3.11	10.5 - 11.0
1195	046710	01/21/90	U-TOTAL	16000	UG/L	2300	N/A
1195	046711	07/31/90	U-TOTAL	10200	UG/L	1400	N/A
1195	051983	11/14/89	U-TOTAL	62	UG/G	10	15.0 - 15.5
1195	051983	11/14/89	TH-TOTAL	7.83	UG/G	2.60	15.0 - 15.5
1195	066904	07/31/90	TH-TOTAL	5.4	UG/L		13.0
1195	066904	07/31/90	U-TOTAL	7579	UG/L	1207	13.0

ASI/IT WELL/BORING DRUMMED CUTTINGS SUSPECT AREA DRUMS

Drum Identification No.	Boring/Well No	Field TINU Detected (Yes/No)	Field RAD Detected (Yes/No)	SAMPLES FROM DRUM Sample number and results received (Yes/No) TOTAL U	TOTAL Th	TCLP	SAMPLES FROM BORING Sample number and results received (Yes/No) TOTAL U	TOTAL Th	TCLP	Variance No.
W020-ASI-P011-1195	1195 (W)	NO	YES	NA	NA	NA	16861 Yes	16861 Yes	NA	N/A
	1195 (W)						16880 Yes	16880 Yes		
	1195 (W)						16869 Yes	16869 Yes		
	1195 (W)						51983 Yes	51983 Yes		

ASI/IT WELL/BORING DRUMMED CUTTINGS SUSPECT AREA DRUMS

Drum Identification No.	Boring/Well No	Field TINU Detected (Yes/No)	Field RAD Detected (Yes/No)	SAMPLES FROM DRUM: Sample number and results received (Yes/No) TOTAL U	TOTAL Th	TCLP	SAMPLES FROM BORING: Sample number and results received (Yes/No) TOTAL U	TOTAL Th	TCLP	Variance No.
W020-ASI-P011-1190	1190 (W)	NO	YES	NA	NA	NA	16749 Yes	16749 Yes	NA	N/A
	1190 (W)						51881 Yes	51881 Yes		
	1190 (W)						16757 Yes	16757 Yes		
	1190 (W)						16751 Yes	16751 Yes		
	1190 (W)						16768 Yes	16768 Yes		

WELL-ID	SAMPLE	COLL-DAT	RTEST-RAD	RESULTS-RAD	RAD-UNIT	SIGMA-2	SAMP-DEPTH
1189	016727	01/24/90	U-TOTAL	15.0	UG/G	3.4	1.0 - 1.5
1189	016727	01/24/90	TH-TOTAL	6.44	UG/G	3.80	1.0 - 1.5
1189	016729	01/24/90	TH-TOTAL	3.44	UG/G		2.0 - 2.5
1189	016729	01/24/90	U-TOTAL	3.25	UG/G	2.58	2.0 - 2.5
1189	016735	01/24/90	U-TOTAL	6.90	UG/G	2.72	5.0 - 5.5
1189	016735	01/24/90	TH-TOTAL	7.30	UG/G	2.56	5.0 - 5.5
1189	016745	01/24/90	U-TOTAL	461	UG/G	70	10.0 - 10.5
1189	016745	01/24/90	TH-TOTAL	11.1	UG/G	5.1	10.0 - 10.5
1189	046851	06/30/90	U-TOTAL	17300	UG/L	2300	N/A
1189	046853	09/11/90	U-TOTAL	8430	UG/L	1160	N/A
1189	051861	01/30/90	U-TOTAL	510	UG/G	78	15.0 - 15.5
1189	051861	01/30/90	TH-TOTAL	18.7	UG/G	5.9	15.0 - 15.5

ASI/IT WELL/BORING DRUMMED CUTTINGS SUSPECT AREA DRUMS

Drum Identification No.	Boring/Well No	Field HNU Detected (Yes/No)	Field RAD Detected (Yes/No)	SAMPLES FROM DRUM: Sample number and results received (Yes/No) TOTAL U	TOTAL Th	TCLP	SAMPLES FROM BORING: Sample number and results received (Yes/No) TOTAL U	TOTAL Th	TCLP	Variance No.
W020-ASI-P011-1189	1189 (W)	NO	YES	NA	NA	NA	16727 Yes	16727 Yes	NA	N/A
	1189 (W)						16729 Yes	16729 Yes		
	1189 (W)						51861 Yes	51861 Yes		
	1189 (W)						16735 Yes	16735 Yes		
	1189 (W)						16745 Yes	16745 Yes		

137

5200

WELL-ID	SAMPLE	COLL-DAT	RTEST-RAD	RESULTS-RAD	RAD-UNIT	SIGMA-2	SAMP-DEPTH
1188	016705	01/31/90	TH-TOTAL	3	UG/G	1	1.0 - 1.5
1188	016705	01/31/90	U-TOTAL	34.5	UG/G	5.1	1.0 - 1.5
1188	016709	01/31/90	TH-TOTAL	4	UG/G		3.0 - 3.5
1188	016709	01/31/90	U-TOTAL	26.5	UG/G	4.3	3.0 - 3.5
1188	016715	02/01/90	TH-TOTAL	8	UG/G	2	6.0 - 6.5
1188	016715	02/01/90	U-TOTAL	40.7	UG/G	7.3	6.0 - 6.5
1188	016724	02/01/90	TH-TOTAL	8	UG/G	2	10.5 - 11.0
1188	016724	02/01/90	U-TOTAL	59.6	UG/G	10	10.5 - 11.0
1188	046857	06/30/90	U-TOTAL	17400	UG/L	2200	N/A
1188	046859	09/11/90	U-TOTAL	19100	UG/L	2700	N/A
1188	051841	02/01/90	TH-TOTAL	6	UG/G	2	15.0 - 15.5
1188	051841	02/01/90	U-TOTAL	30.0	UG/G	6.3	15.0 - 15.5

ASI/IT WELL/BORING DRUMMED CUTTINGS SUSPECT AREA DRUMS

Drum Identification No.	Boring/Well No	Field TINU Detected (Yes/No)	Field RAD Detected (Yes/No)	SAMPLES FROM DRUM: Sample number and results received (Yes/No) TOTAL U	TOTAL Th	TCLP	SAMPLES FROM BORING: Sample number and results received (Yes/No) TOTAL U	TOTAL Th	TCLP	Variance No.
W020-ASI-P011-1188	1188 (W)	NO	YES	NA	NA	NA	16705 Yes	16705 Yes	NA	N/A
	1188 (W)						51841 Yes	51841 Yes		
	1188 (W)						16715 Yes	16715 Yes		
	1188 (W)						16709 Yes	16709 Yes		
	1188 (W)						16724 Yes	16724 Yes		

WELL ID	SAMPLE COLL-DAT	RTEST-RAD	RESULTS-RAD	RAD-UNIT	SIGMA-2	SAMP-DEPTH
1137	045216 10/19/89	U-TOTAL	453	UG/L	73	N/A
1187	045585 10/19/89	U-TOTAL	471	UG/G	73	N/A

140

5200

ASI/IT WELL/BORING DRUMMED CUTTINGS SUSPECT AREA DRUMS

Drum Identification No.	Boring/Well No	Field HNU Detected (Yes/No)	Field RAD Detected (Yes/No)	SAMPLES FROM DRUM Sample number and results received (Yes/No) TOTAL U	TOTAL Th	TCLP	SAMPLES FROM BORING Sample number and results received (Yes/No) TOTAL U	TOTAL Th	TCLP	Variance No.
W020-ASI-P011-1187	1187 (W)	NO	YES	NA	NA	NA	45585 Yes	NA	NA	N/A

WELL	SAMPLE	COLL-DAT	RTEST-PAD	RESULTS-RAD	RAD-UNIT	SIGMA-2	SAMP-DEP...
1186	016661	07/01/89	U-TOTAL	186	UG/G	28	0.0 - 0.5
1186	016661	07/01/89	TH-TOTAL	4.70	UG/G	1.50	0.0 - 0.5
1186	016681	07/01/89	U-TOTAL	111	UG/G	17	10.0 - 10.5
1186	016681	07/01/89	TH-TOTAL	4.55	UG/G	1.44	10.0 - 10.5
1186	045270	10/19/89	U-TOTAL	44900	UG/L	6100	N/A

142

5200

ASI/IT WELL/BORING DRUMMED CUTTINGS SUSPECT AREA DRUMS

Drum Identification No.	Boring/Well No	Field HNU Detected (Yes/No)	Field RAD Detected (Yes/No)	SAMPLES FROM DRUM: Sample number and results received (Yes/No) TOTAL U	TOTAL Th	TCLP	SAMPLES FROM BORING: Sample number and results received (Yes/No) TOTAL U	TOTAL Th	TCLP	Variance No.
W020-ASI-P011-1186	1186 (W) 1186 (W)	NO	YES	NA	NA	NA	16661 Yes 16681 Yes	16661 Yes 16681 Yes	NA	N/A

WELL-ID	SAMPLE	COLL-DAT	RTEST-RAD	RESULTS-RAD	RAD-UNIT	SIGMA-2	SAMP-DEPTH
1185	016639	10/24/89	U-TOTAL	94.3	UG/G	15	0.0 - 0.5
1185	016642	10/24/89	U-TOTAL	9.49	UG/G	2.64	1.5 - 2.0
1185	016649	10/24/89	U-TOTAL	4.74	UG/G	2.62	5.0 - 5.5
1185	016660	10/24/89	U-TOTAL	16.7	UG/G	3.8	10.5 - 11.0
1185	046656	11/01/89	U-TOTAL	1020	UG/L	144	N/A
1185	046658	02/16/90	U-TOTAL	1420	UG/L	220	N/A
1185	051783	10/24/89	U-TOTAL	49.2	UG/G	5.7	15.0 - 15.5
1185	051783	10/24/89	TH-TOTAL	4.63	UG/G	1.19	15.0 - 15.5

144

11 6200

WELL-ID	SAMPLE	COLL-DAT	RTEST-RAD	RESULTS-RAD	RAD-UNIT	SIGMA-2	SAMP-DEPTH
1194	016837	11/19/89	U-TOTAL	6.66	UG/G	2.19	1.0 - 1.5
1194	016837	11/19/89	TH-TOTAL	5.84	UG/G	2.78	1.0 - 1.5
1194	016839	11/19/89	U-TOTAL	2.68	UG/G	2.36	2.0 - 2.5
1194	016839	11/19/89	TH-TOTAL	5.50	UG/G	3.81	2.0 - 2.5
1194	016845	11/19/89	U-TOTAL	6.45	UG/G	2.49	5.0 - 5.5
1194	016845	11/19/89	TH-TOTAL	11.7	UG/G	4.2	5.0 - 5.5
1194	016855	11/19/89	U-TOTAL	24.77	UG/G	3.87	10.0 - 10.5
1194	016855	11/19/89	TH-TOTAL	5.14	UG/G	2.50	10.0 - 10.5
1194	046740	01/21/90	U-TOTAL	812	UG/L	111	N/A
1194	051960	11/19/89	U-TOTAL	2.62	UG/G	2.06	14.5 - 15.0
1194	051960	11/19/89	TH-TOTAL	10.0	UG/G	4.5	14.5 - 15.0

ASI/IT WELL/BORING DRUMMED CUTTINGS SUSPECT AREA DRUMS

Drum Identification No.	Boring/Well No	Field TINU Detected (Yes/No)	Field RAD Detected (Yes/No)	SAMPLES FROM DRUM: Sample number and results received (Yes/No) TOTAL U	TOTAL Th	TCLP	SAMPLES FROM BORING: Sample number and results received (Yes/No) TOTAL U	TOTAL Th	TCLP	Variance No.
W020-ASI-P011-1194	1194 (W)	NO	YES	NA	NA	NA	16837 Yes	16837 Yes	NA	N/A
	1194 (W)						16845 Yes	16845 Yes		
	1194 (W)						16839 Yes	16839 Yes		
	1194 (W)						51960 Yes	51960 Yes		
	1194 (W)						16855 Yes	16855 Yes		

146

-5200

ASI/IT WELL/BORING DRUMMED CUTTINGS SUSPECT AREA DRUMS

Drum Identification No.	Boring/Well No	Field HNU Detected (Yes/No)	Field RAD Detected (Yes/No)	SAMPLES FROM DRUM Sample number and results received (Yes/No) TOTAL U	TOTAL Th	TCLP	SAMPLES FROM BORING Sample number and results received (Yes/No) TOTAL U	TOTAL Th	TCLP	Variance No.
R020-ASI-P011-1193	1193 (W)	NO	YES	NA	NA	NA	16815 Yes	16815 Yes	NA	N/A
	1193 (W)						16817 Yes	16817 Yes		
	1193 (W)						16823 Yes	16823 Yes		
	1193 (W)						16834 Yes	16834 Yes		
	1193 (W)						51941 Yes	51941 Yes		

WELL-ID	SAMPLE	COLL-DAT	RTEST-RAD	RESULTS-RAD	RAD-UNIT	SIGMA-2	SAMP-DEPTH
1193	016815	12/01/89	TH-TOTAL	4.85	UG/G		1.0 - 1.5
1193	016815	12/01/89	U-TOTAL	3.06	UG/G	2.06	1.0 - 1.5
1193	016817	12/01/89	U-TOTAL	2.85	UG/G	2.05	2.0 - 2.5
1193	016817	12/01/89	TH-TOTAL	7.07	UG/G	2.11	2.0 - 2.5
1193	016823	12/01/89	U-TOTAL	4.32	UG/G	2.35	5.0 - 5.5
1193	016823	12/01/89	TH-TOTAL	13.5	UG/G	4.1	5.0 - 5.5
1193	016834	12/01/89	U-TOTAL	2.28	UG/G	1.94	10.5 - 11.0
1193	016834	12/01/89	TH-TOTAL	7.20	UG/G	2.33	10.5 - 11.0
1193	046776	01/21/90	U-TOTAL	38.8	UG/L	6.8	N/A
1193	046777	07/31/90	U-TOTAL	1.77	UG/L	0.20	N/A
1193	051941	12/01/89	U-TOTAL	6.04	UG/G	2.26	15.0 - 15.5
1193	051941	12/01/89	TH-TOTAL	6.85	UG/G	2.97	15.0 - 15.5

ASI/IT WELL/BORING DRUMMED CUTTINGS SUSPECT AREA DRUMS

Drum Identification No.	Boring/Well No	Field INU Detected (Yes/No)	Field RAD Detected (Yes/No)	SAMPLES FROM DRUM: Sample number and results received (Yes/No) TOTAL U	TOTAL Th	TCLP	SAMPLES FROM BORING: Sample number and results received (Yes/No) TOTAL U	TOTAL Th	TCLP	Variance No.
R020-ASI-P011-1193	1193 (W)	NO	YES	NA	NA	NA	16815 Yes	16815 Yes	NA	N/A
	1193 (W)						16817 Yes	16817 Yes		
	1193 (W)						16823 Yes	16823 Yes		
	1193 (W)						16834 Yes	16834 Yes		
	1193 (W)						51941 Yes	51941 Yes		

WELL-ID	SAMPLE	COLL-DAT	RTEST-RAD	RESULTS-RAD	RAD-UNIT	SIGMA-2	SAMP-DEPTH
1190	016749	01/22/90	U-TOTAL	7.98	UG/G	2.24	1.0 - 1.5
1190	016749	01/22/90	TH-TOTAL	7.30	UG/G	2.43	1.0 - 1.5
1190	016751	01/22/90	U-TOTAL	2.33	UG/G	1.90	2.0 - 2.5
1190	016751	01/22/90	TH-TOTAL	6.45	UG/G	2.43	2.0 - 2.5
1190	016757	01/22/90	U-TOTAL	7.69	UG/G	2.59	5.0 - 5.5
1190	016757	01/22/90	TH-TOTAL	9.72	UG/G	2.63	5.0 - 5.5
1190	016768	01/22/90	TH-TOTAL	3.61	UG/G		10.5 - 11.0
1190	016768	01/22/90	U-TOTAL	34.0	UG/G	5.9	10.5 - 11.0
1190	046846	06/30/90	U-TOTAL	54200	UG/L	7400	N/A
1190	048848	09/11/90	U-TOTAL	74700	UG/L	10100	N/A
1190	051881	01/22/90	U-TOTAL	18.4	UG/G	3.7	15.0 - 15.5
1190	051881	01/22/90	TH-TOTAL	4.58	UG/G	2.06	15.0 - 15.5

150

15200

ASI/IT WELL/BORING DRUMMED CUTTINGS SUSPECT AREA DRUMS

Drum Identification No.	Boring/Well No	Field HNU Detected (Yes/No)	Field RAD Detected (Yes/No)	SAMPLES FROM DRUM: Sample number and results received (Yes/No) TOTAL U	TOTAL Th	TCLP	SAMPLES FROM BORING: Sample number and results received (Yes/No) TOTAL U	TOTAL Th	TCLP	Variance No.
W020-ASI-P011-1185	1185 (W)	NO	YES	NA	NA	NA	16639 Yes	51783 Yes	NA	N/A
	1185 (W)						51783 Yes			
	1185 (W)						16642 Yes			
	1185 (W)						16660 Yes			
	1185 (W)						16649 Yes			

WELL-ID	SAMPLE	COLL-DAT	RTEST-RAD	RESULTS-RAD	RAD-UNIT	SIGMA-2	SAMP-DEPTH
1183	016596	10/23/89	U-TOTAL	3880	UG/G	558	0.0 - 0.5
1183	016596	10/23/89	TH-TOTAL	27.7	UG/G	4.4	0.0 - 0.5
1183	016598	10/23/89	U-TOTAL	225	UG/G	33	0.5 - 1.0
1183	016598	10/23/89	TH-TOTAL	9.38	UG/G	1.98	0.5 - 1.0
1183	016600	10/23/89	U-TOTAL	107	UG/G	12	1.5 - 2.0
1183	016607	10/23/89	U-TOTAL	55.5	UG/G	9.5	5.0 - 5.5
1183	046650	11/01/89	U-TOTAL	8632	UG/L	1157	N/A
1183	046652	01/24/90	U-TOTAL	4800	UG/L	700	N/A
1183	051736	10/23/89	U-TOTAL	224	UG/G	34	10.5 - 11.0
1183	051745	10/23/89	U-TOTAL	134	UG/G	15	15.0 - 15.5
1183	051745	10/23/89	TH-TOTAL	9.16	UG/G	2.59	15.0 - 15.5

152

-6200

ASI/IT WELL/BORING DRUMMED CUTTINGS SUSPECT AREA DRUMS

Drum Identification No.	Boring/Well No	Field HNU Detected (Yes/No)	Field RAD Detected (Yes/No)	SAMPLES FROM DRUM: Sample number and results received (Yes/No) TOTAL U	TOTAL Th	TCLP	SAMPLES FROM BORING: Sample number and results received (Yes/No) TOTAL U	TOTAL Th	TCLP	Variance No.
W020-ASI-P011-1183	1183 (W)	NO	YES	NA	NA	NA	16596 Yes	16596 Yes	NA	N/A
R020-ASI-P011-1183	1183 (W)						16598 Yes	16598 Yes		
	1183 (W)						16600 Yes	51745 Yes		
	1183 (W)						51745 Yes			
	1183 (W)						16607 Yes			
	1183 (W)						51736 Yes			

ASI/[illegible]/ELL/BORING DRUMMED CUTTINGS [illegible]SPECT AREA DRUMS

Drum Identification No.	Boring/Well No	Field I INU Detected (Yes/No)	Field II AD Detected (Yes/No)	SAMPLES FROM DRUM: Sample number and results received (Yes/No) TOTAL U	TOTAL Th	TCLP	SAMPLES FROM BORING: Sample number and results received (Yes/No) TOTAL U	TOTAL Th	TCLP	Variance No.
W020-ASI-P011-1209	1209 (W) 1209 (W)	NO	YES	NA	NA	NA	17167 Yes 17177 Yes	17167 Yes 17177 Yes	NA	N/A

154

-5200

WELL-ID	SAMPLE	COLL-DAT	RTEST-RAD	RESULTS-RAD	RAD-UNIT	SIGMA-2	SAMP-DEPTH
1209	017167	06/01/89	U-TOTAL	133	UG/G	16	0.0 - 0.5
1209	017167	06/01/89	TH-TOTAL	3.4	UG/G		0.0 - 0.5
1209	017177	06/01/89	TH-TOTAL	3.0	UG/G		5.0 - 5.5
1209	017177	06/01/89	U-TOTAL	90.8	UG/G	15	5.0 - 5.5
1209	045733	10/22/89	U-TOTAL	13300	UG/L	1800	N/A
1209	066909	07/16/90	U-TOTAL	17600	UG/L	2260	12.35
1209	066909	07/16/90	TH-TOTAL	12.7	UG/L	5.9	12.35

155

5200

ASI/I[illegible]ELL/BORING DRUMMED CUTTINGS [illegible]SPECT AREA DRUMS

Drum Identification No.	Boring/Well No	Field TINU Detected (Yes/No)	Field RAD Detected (Yes/No)	SAMPLES FROM DRUM Sample number and results received (Yes/No) TOTAL U	TOTAL Th	TCLP	SAMPLES FROM BORING Sample number and results received (Yes/No) TOTAL U	TOTAL Th	TCLP	Variance No.
W020-ASI-P011-1210	1210 (W)	NO	YES	NA	NA	NA	NA	NA	NA	N/A

ASI/IT WELL/BORING DRUMMED CUTTINGS SUSPECT AREA DRUMS

Drum Identification No.	Boring/Well No	Field HNU Detected (Yes/No)	Field RAD Detected (Yes/No)	SAMPLES FROM DRUM Sample number and results received (Yes/No) TOTAL U	TOTAL Th	TCLP	SAMPLES FROM BORING Sample number and results received (Yes/No) TOTAL U	TOTAL Th	TCLP	Variance No.
W020-ASI-P011-1211	1211 (W)	NO	YES	NA	NA	NA	NA	NA	NA	N/A

157

5200

ASI/IT WELL/BORING DRUMMED CUTTINGS SUSPECT AREA DRUMS

Drum Identification No.	Boring/Well No	Field TINU Detected (Yes/No)	Field RAD Detected (Yes/No)	SAMPLES FROM DRUM: Sample number and results received (Yes/No) TOTAL U	TOTAL Th	TCLP	SAMPLES FROM BORING: Sample number and results received (Yes/No) TOTAL U	TOTAL Th	TCLP	Variance No.
W020-ASI-P011-1212	1212 (W)	NO	YES	NA	NA	NA	17233 Yes	17233 Yes	NA	N/A
	1212 (W)						17234 Yes	17234 Yes		
	1212 (W)						17235 Yes	17235 Yes		
	1212 (W)						17237 Yes	17237 Yes		
	1212 (W)						17241 Yes	17241 Yes		
	1212 (W)						52241 Yes	52241 Yes		
	1212 (W)						17252 Yes	17252 Yes		

WELL-ID	SAMPLE	COLL-DAT	RTEST-RAD	RESULTS-RAD	RAD-UNIT	SIGMA-2	SAMP-DEPTH
1212	017233	11/01/89	U-TOTAL	682	UG/G	69	1.0 - 1.5
1212	017233	11/01/89	TH-TOTAL	20.8	UG/G	4.2	1.0 - 1.5
1212	017234	11/01/89	U-TOTAL	558	UG/G	81	1.5 - 2.0
1212	017234	11/01/89	TH-TOTAL	19.8	UG/G	4.2	1.5 - 2.0
1212	017235	11/01/89	U-TOTAL	227	UG/G	23	2.0 - 2.5
1212	017235	11/01/89	TH-TOTAL	4.82	UG/G	1.45	2.0 - 2.5
1212	017237	11/01/89	U-TOTAL	70.8	UG/G	11	3.0 - 3.5
1212	017237	11/01/89	TH-TOTAL	6.61	UG/G	1.96	3.0 - 3.5
1212	017241	11/01/89	U-TOTAL	599	UG/G	61	5.0 - 5.5
1212	017241	11/01/89	TH-TOTAL	13.9	UG/G	2.8	5.0 - 5.5
1212	017252	11/02/89	U-TOTAL	170	UG/G	26	10.5 - 11.0
1212	017252	11/02/89	TH-TOTAL	9.18	UG/G	2.17	10.5 - 11.0
1212	046824	01/19/90	U-TOTAL	25100	UG/L	3300	N/A
1212	046826	05/06/90	TH-TOTAL	1.4	UG/L		N/A
1212	046826	05/06/90	U-TOTAL	18770	UG/L	2931	N/A
1212	052241	11/02/89	U-TOTAL	259	UG/G	27	15.0 - 15.5
1212	052241	11/02/89	TH-TOTAL	9.59	UG/G	3.16	15.0 - 15.5
1212	066911	07/16/90	U-TOTAL	4240	UG/L	570	10.3
1212	066911	07/16/90	TH-TOTAL	38.2	UG/L	12.9	10.3

ASI/I ELL/BORING DRUMMED CUTTINGS SPECT AREA DRUMS

Drum Identification No.	Boring/Well No	Field HNU Detected (Yes/No)	Field RAD Detected (Yes/No)	SAMPLES FROM DRUM: Sample number and results received (Yes/No) TOTAL U	TOTAL Th	TCLP	SAMPLES FROM BORING: Sample number and results received (Yes/No) TOTAL U	TOTAL Th	TCLP	Variance No.
W020-ASI-P011-1213	1213 (W)	NO	YES	NA	NA	NA	17267 Yes	17267 Yes	NA	N/A

160

-5200

WELL-ID	SAMPLE COLL-DAT	RTEST-RAD	RESULTS-RAD	RAD-UNIT	SIGMA-2	SAMP-DEPTH
1213	017267 06/04/89	U-TOTAL	131	UG/G	21	6.0 - 6.5
1213	017267 06/04/89	TH-TOTAL	3.79	UG/G	2.42	6.0 - 6.5
1213	045747 10/22/89	U-TOTAL	17300	UG/L	2400	N/A
1213	045749 05/06/90	TH-TOTAL	1.6	UG/L		N/A
1213	045749 05/06/90	U-TOTAL	24230	UG/L	3640	N/A
1213	066912 07/16/90	U-TOTAL	15100	UG/L	1900	9.65
1213	066912 07/16/90	TH-TOTAL	20.2	UG/L	13.8	9.65

ASI/IT ELL/BORING DRUMMED CUTTINGS PECT AREA DRUMS

Drum Identification No.	Boring/Well No	Field HNU Detected (Yes/No)	Field RAD Detected (Yes/No)	SAMPLES FROM DRUM: Sample number and results received (Yes/No) TOTAL U	TOTAL Th	TCLP	SAMPLES FROM BORING: Sample number and results received (Yes/No) TOTAL U	TOTAL Th	TCLP	Variance No.
W020-ASI-P011-1214	1214 (W)	NO	YES	NA	NA	NA	17277 Yes	17277 Yes	NA	N/A
	1214 (W)						17284 Yes	17284 Yes		
	1214 (W)						17295 Yes	17295 Yes		
	1214 (W)						52280 Yes	52280 Yes		
	1214 (W)						17278 Yes	17278 Yes		
	1214 (W)						17281 Yes	17281 Yes		

162

5200

WELL-ID	SAMPLE	COLL-DAT	RTEST-RAD	RESULTS-RAD	RAD-UNIT	SIGMA-2	SAMP-DEPTH
1214	017277	12/14/89	U-TOTAL	134	UG/G	21	1.0 - 1.5
1214	017277	12/14/89	TH-TOTAL	6.79	UG/G	2.18	1.0 - 1.5
1214	017278	12/14/89	U-TOTAL	93.8	UG/G	11	1.5 - 2.0
1214	017278	12/14/89	TH-TOTAL	5.92	UG/G	1.91	1.5 - 2.0
1214	017281	12/14/89	U-TOTAL	40.8	UG/G	5.50	3.0 - 3.5
1214	017281	12/14/89	TH-TOTAL	5.80	UG/G	1.70	3.0 - 3.5
1214	017284	12/14/89	U-TOTAL	7.98	UG/G	2.79	4.5 - 5.0
1214	017284	12/14/89	TH-TOTAL	6.79	UG/G	1.62	4.5 - 5.0
1214	017295	12/14/89	U-TOTAL	467	UG/G	71	10.0 - 10.5
1214	017295	12/14/89	TH-TOTAL	7.40	UG/G	1.71	10.0 - 10.5
1214	046788	01/16/90	U-TOTAL	2156	UG/L	247	N/A
1214	046790	05/06/90	TH-TOTAL	2.21	UG/L	1.50	N/A
1214	046790	05/06/90	U-TOTAL	154400	UG/L	21390	N/A
1214	052280	12/14/89	U-TOTAL	6.57	UG/G	3.47	14.5 - 15.0
1214	052280	12/14/89	TH-TOTAL	6.68	UG/G	1.83	14.5 - 15.0

ASI/I ELL/BORING DRUMMED CUTTINGS SPECT AREA DRUMS

Drum Identification No.	Boring/Well No	Field HNU Detected (Yes/No)	Field HAD Detected (Yes/No)	SAMPLES FROM DRUM: Sample number and results received (Yes/No) TOTAL U	TOTAL Th	TCLP	SAMPLES FROM BORING: Sample number and results received (Yes/No) TOTAL U	TOTAL Th	TCLP	Variance No.
W020-ASI-P011-1215	1215 (W)	NO	YES	NA	NA	NA	17299 Yes	NA	NA	N/A
	1215 (W)						52303 Yes			
	1215 (W)						17320 Yes			
	1215 (W)						17309 Yes			
	1215 (W)						17303 Yes			

164

5200

WELL-ID	SAMPLE	COLL-DAT	RTEST-RAD	RESULTS-RAD	RAD-UNIT	SIGMA-2	SAMP-DEPTH
1215	017299	10/22/89	U-TOTAL	116	UG/G	18	0.0 - 0.5
1215	017303	10/22/89	U-TOTAL	4.57	UG/G	2.23	2.0 - 2.5
1215	017309	10/22/89	U-TOTAL	7.56	UG/G	2.7	5.0 - 5.5
1215	017320	10/22/89	U-TOTAL	28.7	UG/G	4.7	10.5 - 11.0
1215	046638	11/01/89	U-TOTAL	1170	UG/L	170	N/A
1215	046640	07/29/90	U-TOTAL	2090	UG/L	271	N/A
1215	052303	10/22/89	U-TOTAL	31.1	UG/G	5.6	15.0 - 15.5

ASI/IT ELL/BORING DRUMMED CUTTINGS SUSPECT AREA DRUMS

Drum Identification No.	Boring/Well No	Field HNU Detected (Yes/No)	Field RAD Detected (Yes/No)	SAMPLES FROM DRUM: Sample number and results received (Yes/No) TOTAL U	TOTAL Th	TCLP	SAMPLES FROM BORING: Sample number and results received (Yes/No) TOTAL U	TOTAL Th	TCLP	Variance No.
W020-ASI-P011-1216	1216 (W)	NO	YES	NA	NA	NA	17321 Yes	NA	NA	N/A
	1216 (W)						17329 Yes			
	1216 (W)						17339 Yes			
	1216 (W)						17323 Yes			
	1216 (W)						52321 Yes			

166

15200

WELL-ID	SAMPLE	COLL-DAT	RTEST-RAD	RESULTS-RAD	RAD-UNIT	SIGMA-2	SAMP-DEPTH
1216	017321	10/20/89	U-TOTAL	41.2	UG/G	7.0	1.0 - 1.5
1216	017323	10/20/89	U-TOTAL	5.03	UG/G	2.15	2.0 - 2.5
1216	017329	10/20/89	U-TOTAL	6.16	UG/G	2.54	5.0 - 5.5
1216	017339	10/21/89	U-TOTAL	5.80	UG/G	2.33	10.0 - 10.5
1216	046632	11/01/89	U-TOTAL	215	UG/L	35	N/A
1216	046634	11/01/89	U-TOTAL	243	UG/L	41	N/A
1216	046636	08/12/90	U-TOTAL	244	UG/L	37	N/A
1216	052321	10/21/89	U-TOTAL	8.30	UG/G	2.35	15.0 - 15.5

ASI/TELL/BORING DRUMMED CUTTINGS SUSPECT AREA DRUMS

Drum Identification No.	Boring/Well No	Field TRU Detected (Yes/No)	Field RAD Detected (Yes/No)	SAMPLES FROM DRUM: Sample number and results received (Yes/No) TOTAL U	TOTAL Th	TCLP	SAMPLES FROM BORING: Sample number and results received (Yes/No) TOTAL U	TOTAL Th	TCLP	Variance No.
W020-ASI-P011-1217	1217 (W)	NO	YES	NA	NA	NA	17343 Yes	17343 Yes	NA	N/A
	1217 (W)						17353 Yes	17353 Yes		
	1217 (W)						17347 Yes	17347 Yes		
	1217 (W)						52342 Yes	52342 Yes		
	1217 (W)						17363 Yes	17363 Yes		

168

5200

WELL-ID	SAMPLE	COLL-DAT	RTEST-RAD	RESULTS-RAD	RAD-UNIT	SIGMA-2	SAMP-DEPTH
1217	017343	11/18/89	TH-TOTAL	20.0	UG/G	5.5	0.0 - 0.5
1217	017343	11/18/89	U-TOTAL	362.8	UG/G	55.09	0.0 - 0.5
1217	017347	11/18/89	U-TOTAL	2.62	UG/G	2.15	2.0 - 2.5
1217	017347	11/18/89	TH-TOTAL	16.4	UG/G	5.8	2.0 - 2.5
1217	017353	11/18/89	U-TOTAL	7.31	UG/G	2.48	5.0 - 5.5
1217	017353	11/18/89	TH-TOTAL	11.3	UG/G	3.4	5.0 - 5.5
1217	017363	11/18/89	U-TOTAL	49.42	UG/G	6.03	10.0 - 10.5
1217	017363	11/18/89	TH-TOTAL	6.79	UG/G	2.25	10.0 - 10.5
1217	046734	01/18/90	U-TOTAL	3606	UG/L	596	N/A
1217	046735	01/18/90	U-TOTAL	5391	UG/L	741	N/A
1217	046736	08/22/90	U-TOTAL	3430	UG/L	530	N/A
1217	052342	11/16/89	U-TOTAL	2.36	UG/G	2.29	14.5 - 15.0
1217	052342	11/16/89	TH-TOTAL	5.00	UG/G	2.32	14.5 - 15.0

ASI/IT ELL/BORING DRUMMED CUTTINGS SPECT AREA DRUMS

Drum Identification No.	Boring/Well No	Field HNU Detected (Yes/No)	Field RAD Detected (Yes/No)	SAMPLES FROM DRUM: Sample number and results received (Yes/No)			SAMPLES FROM BORING: Sample number and results received (Yes/No)			Variance No.
				TOTAL U	TOTAL Th	TCLP	TOTAL U	TOTAL Th	TCLP	
W020-ASI-P011-1218	1218 (W)	NO	YES	NA	NA	NA	NA	NA	NA	N/A

170

5200

ASI/IT WELL/BORING DRUMMED CUTTINGS SUSPECT AREA DRUMS

Drum Identification No.	Boring/Well No	Field HNU Detected (Yes/No)	Field RAD Detected (Yes/No)	SAMPLES FROM DRUM Sample number and results received (Yes/No)			SAMPLES FROM BORING Sample number and results received (Yes/No)			Variance No.
				TOTAL U	TOTAL Th	TCLP	TOTAL U	TOTAL Th	TCLP	
W020-ASI-P011-1219	1219 (W)	NO	YES	NA	NA	NA	NA	NA	NA	N/A

ASI/IT ELL/BORING DRUMMED CUTTINGS SPECT AREA DRUMS

Drum Identification No.	Boring/Well No	Field HNU Detected (Yes/No)	Field RAD Detected (Yes/No)	SAMPLES FROM DRUM: Sample number and results received (Yes/No) TOTAL U	TOTAL Th	TCLP	SAMPLES FROM BORING: Sample number and results received (Yes/No) TOTAL U	TOTAL Th	TCLP	Variance No.
W020-ASI-P011-1220	1220 (W) 1220 (W)	NO	YES	NA	NA	NA	17409 Yes 17419 Yes	17409 Yes 17419 Yes	NA	N/A

172

-8200

WELL-ID	SAMPLE	COLL-DAT	RTEST-RAD	RESULTS-RAD	RAD-UNIT	SIGMA-2	SAMP-DEPTH
1220	017409	05/25/89	U-TOTAL	373	UG/G	40	0.0 - 0.5
1220	017409	05/25/89	TH-TOTAL	2.04	UG/G	0.76	0.0 - 0.5
1220	017419	05/25/89	U-TOTAL	112	UG/G	19	5.0 - 5.5
1220	017419	05/25/89	TH-TOTAL	5.47	UG/G	2.14	5.0 - 5.5
1220	045760	10/22/89	U-TOTAL	5660	UG/L	830	N/A
1220	045761	05/19/90	TH-TOTAL	11.2	UG/L	4.8	N/A
1220	045762	10/22/89	U-TOTAL	4330	UG/L	600	N/A

WE[illegible]D	SAMPLE	COLL-DAT	RTEST-RAD	ULTS-RAD	RAD-UNIT	SIGMA-2	SAMP-[illegible]
1224	017497	05/15/89	U-TOTAL	129	UG/G	21	0.0 - 0.5
1224	017497	05/15/89	TH-TOTAL	1.2	UG/G		0.0 - 0.5
1224	045764	10/23/89	U-TOTAL	6880	UG/L	910	N/A
1224	045766	05/05/90	TH-TOTAL	5.0	UG/L		N/A
1224	045766	05/05/90	U-TOTAL	2670	UG/L	500	N/A

ASI/IT WELL/BORING DRUMMED CUTTINGS SUSPECT AREA DRUMS

Drum Identification No.	Boring/Well No	Field TINU Detected (Yes/No)	Field RAD Detected (Yes/No)	SAMPLES FROM DRUM: Sample number and results received (Yes/No) TOTAL U	TOTAL Th	TCLP	SAMPLES FROM BORING: Sample number and results received (Yes/No) TOTAL U	TOTAL Th	TCLP	Variance No.
W020-ASI-P011-1225	1225 (W)	NO	YES	NA	NA	NA	17519 Yes	17519 Yes	NA	N/A
	1225 (W)						62441 Yes	62441 Yes		
	1225 (W)						17538 Yes	17538 Yes		
	1225 (W)						17523 Yes	17523 Yes		
	1225 (W)						17527 Yes	17527 Yes		

WEL ID	SAMPLE	COLL-DAT	RTEST-RAD	RESULTS-RAD	RAD-UNIT	SIGMA-2	SAMP-DEPTH
1225	017519	11/17/89	U-TOTAL	8.51	UG/G	2.35	1.0 - 1.5
1225	017519	11/17/89	TH-TOTAL	2.16	UG/G	1.54	1.0 - 1.5
1225	017523	11/17/89	U-TOTAL	2.76	UG/G	2.09	3.0 - 3.5
1225	017523	11/17/89	TH-TOTAL	5.39	UG/G	1.85	3.0 - 3.5
1225	017527	11/17/89	U-TOTAL	5.70	UG/G	2.50	5.0 - 5.5
1225	017527	11/17/89	TH-TOTAL	7.74	UG/G	5.22	5.0 - 5.5
1225	017538	11/17/89	U-TOTAL	4.0	UG/G		10.5 - 11.0
1225	017538	11/17/89	TH-TOTAL	3.68	UG/G	2.64	10.5 - 11.0
1225	046728	01/18/90	U-TOTAL	222	UG/L	35	N/A
1225	046729	08/13/90	U-TOTAL	141	UG/L	20	N/A
1225	052441	11/17/89	U-TOTAL	7.30	UG/G	2.24	15.0 - 15.5
1225	052441	11/17/89	TH-TOTAL	6.83	UG/G	3.13	15.0 - 15.5

ASI/IT WELL/BORING DRUMMED CUTTINGS SUSPECT AREA DRUMS

Drum Identification No.	Boring/Well No	Field HNU Detected (Yes/No)	Field RAD Detected (Yes/No)	SAMPLES FROM DRUM: Sample number and results received (Yes/No) TOTAL U	TOTAL Th	TCLP	SAMPLES FROM BORING: Sample number and results received (Yes/No) TOTAL U	TOTAL Th	TCLP	Variance No.
W020-ASI-P011-1223	1223 (W)	NO	YES	NA	NA	NA	17475 Yes	17475 Yes	NA	N/A
	1223 (W)						17493 Yes	17493 Yes		
	1223 (W)						17483 Yes	17483 Yes		
	1223 (W)						17476 Yes	17476 Yes		
	1223 (W)						52421 Yes	17477 Yes		
	1223 (W)						17477 Yes			

5200

1177

WELL ID	SAMPLE	COLL-DAT	RTEST-RAD	RESULTS-RAD	RAD-UNIT	SIGMA-2	SAMP-DEPTH
1223	017475	11/02/89	U-TOTAL	3.59	UG/G	2.24	1.0 - 1.5
1223	017475	11/02/89	TH-TOTAL	6.78	UG/G	1.53	1.0 - 1.5
1223	017476	11/02/89	U-TOTAL	2.50	UG/G	2.22	1.5 - 2.0
1223	017476	11/02/89	TH-TOTAL	6.20	UG/G	1.56	1.5 - 2.0
1223	017477	11/02/89	U-TOTAL	2.25	UG/G	1.92	2.0 - 2.5
1223	017477	11/02/89	TH-TOTAL	8.58	UG/G	3.04	2.0 - 2.5
1223	017483	11/02/89	U-TOTAL	4.15	UG/G	1.75	5.0 - 5.5
1223	017483	11/02/89	TH-TOTAL	9.65	UG/G	3.12	5.0 - 5.5
1223	017493	11/02/89	U-TOTAL	4.0	UG/G	.	10.0 - 10.5
1223	017493	11/02/89	TH-TOTAL	6.36	UG/G	2.71	10.0 - 10.5
1223	046680	01/21/90	U-TOTAL	176	UG/L	36	N/A
1223	046681	01/21/90	U-TOTAL	138	UG/L	21	N/A
1223	046682	08/28/90	U-TOTAL	27.9	UG/L	5.9	N/A
1223	052421	11/02/89	U-TOTAL	2.65	UG/G	2.30	15.0 - 15.5

ASI/IT WELL/BORING DRUMMED CUTTINGS SUSPECT AREA DRUMS

Drum Identification No.	Boring/Well No	Field HNU Detected (Yes/No)	Field RAD Detected (Yes/No)	SAMPLES FROM DRUM: Sample number and results received (Yes/No) TOTAL U	TOTAL Th	TCLP	SAMPLES FROM BORING: Sample number and results received (Yes/No) TOTAL U	TOTAL Th	TCLP	Variance No.
W020-ASI-P011-1221	1221 (W)	NO	YES	NA	NA	NA	17431 Yes	17431 Yes	NA	N/A
	1221 (W)						17434 Yes	17434 Yes		
	1221 (W)						17440 Yes	17440 Yes		
	1221 (W)						52379 Yes	52379 Yes		
	1221 (W)						17450 Yes	17450 Yes		
	1221 (W)						17433 Yes	17433 Yes		

WE	ID	SAMPLE	COLL-DAT	RTEST-RAD	SULTS-RAD	RAD-UNIT	SIGMA-2	SAMP-D	H
1221		017431	12/07/89	U-TOTAL	30.8	UG/G	5.8	0.5 - 1.0	
1221		017431	12/07/89	TH-TOTAL	6.56	UG/G	2.05	0.5 - 1.0	
1221		017433	12/07/89	U-TOTAL	10.5	UG/G	3.2	1.5 - 2.0	
1221		017433	12/07/89	TH-TOTAL	6.01	UG/G	1.97	1.5 - 2.0	
1221		017434	12/07/89	U-TOTAL	3.17	UG/G	1.96	2.0 - 2.5	
1221		017434	12/07/89	TH-TOTAL	7.56	UG/G	1.54	2.0 - 2.5	
1221		017440	12/07/89	U-TOTAL	11.9	UG/G	3.3	5.0 - 5.5	
1221		017440	12/07/89	TH-TOTAL	10.9	UG/G	2.3	5.0 - 5.5	
1221		017450	12/13/89	U-TOTAL	65.2	UG/G	8.6	10.0 - 10.5	
1221		017450	12/13/89	TH-TOTAL	7.47	UG/G	1.48	10.0 - 10.5	
1221		046794	01/15/90	U-TOTAL	1636	UG/L	291	N/A	
1221		046795	07/30/90	TH-TOTAL	1.8	UG/L		N/A	
1221		046795	07/30/90	U-TOTAL	13483	UG/L	1906	N/A	
1221		052379	12/13/89	U-TOTAL	16.5	UG/G	3.9	13.5 - 14.0	
1221		052379	12/13/89	TH-TOTAL	8.14	UG/G	2.14	13.5 - 14.0	

ASI/IT WELL/BORING DRUMMED CUTTINGS SUSPECT AREA DRUMS

Drum Identification No.	Boring/Well No	Field INU Detected (Yes/No)	Field RAD Detected (Yes/No)	SAMPLES FROM DRUM Sample number and results received (Yes/No) TOTAL U	TOTAL Th	TCLP	SAMPLES FROM BORING Sample number and results received (Yes/No) TOTAL U	TOTAL Th	TCLP	Variance No.
W020-ASI-P011-1224	1224 (W)	NO	YES	NA	NA	NA	17497 Yes	17497 Yes	NA	N/A

SECTION 5.0

TCLP AND RADIOCHEMICAL DATA
COLLECTED FOR CONSTRUCTION PROJECT
"GUARDPOSTS FOR MONITORING WELLS"

WELL NUMBERS 1177, 1178, 1179 & 1199

Project Name: Guard Posts for MWs
Mat. Type: Concrete/Soil
Revised: 05-03-93

Review of Analyses

ATTACHMENT B
Part I

Well No.: / Depth / Matrix / Lab. No.	Organic Constituent(s):	Total (ppm)	Metal Constituent(s):	TCLP (ppm)	Radiological Constituent(s):		Other Analyses:	
MW 1179	2,4-D	0.00115	Barium	0.300	Total U (ppm)	41.0	Alpha (pCi/g)	16.0
Surface	Silvex (2,4,5-TP)	<0.0005	Mercury	<0.0002	Total Th (ppm)	<18.0	Beta (pCi/g)	<20.0
Concrete			Chromium	<0.500	U-234 (pCi/g)	18.0		
910711-074			Lead	<0.200	U-235 (pCi/g)	0.68		
			Silver	<0.050	U-236 (pCi/g)	0.50		
					U-238 (pCi/g)	14.0		
					Th-228 (pCi/g)	0.47		
					Th-230 (pCi/g)	1.2		
					Th-232 (pCi/g)	0.32		
MW 1179	2,4-D	<0.001	Barium	<0.200	Total U (ppm)	2479.0	Alpha (pCi/g)	1900.0
0" - 6"	Silvex (2,4,5-TP)	<0.0005	Mercury	<0.0002	Total Th (ppm)	21.0	Beta (pCi/g)	1700.0
Soil			Chromium	<0.500	U-234 (pCi/g)	700.0		
910711-075			Lead	<0.200	U-235 (pCi/g)	38.0		
			Silver	<0.050	U-236 (pCi/g)	4.1		
					U-238 (pCi/g)	820.0		
					Th-228 (pCi/g)	0.48		
					Th-230 (pCi/g)	110.0		
					Th-232 (pCi/g)	0.71		
MW 1178	2,4-D	<0.001	Barium	0.276	Total U (ppm)	41.0	Alpha (pCi/g)	<14.0
Surface	Silvex (2,4,5-TP)	<0.0005	Mercury	<0.0002	Total Th (ppm)	<18.0	Beta (pCi/g)	<26.0
Concrete			Chromium	<0.500	U-234 (pCi/g)	13.0		
910711-076			Lead	<0.200	U-235 (pCi/g)	0.64		
			Silver	<0.050	U-236 (pCi/g)	0.14		
					U-238 (pCi/g)	14.0		
					Th-228 (pCi/g)	1.3		
					Th-230 (pCi/g)	3.8		
					Th-232 (pCi/g)	0.69		

183

5200

Project Name: Guard Posts for MWs
Mat. Type: Concrete/Soil
Revised: 05-03-93

Review of Analyses

ATTACHMENT B
Part I

Well No.: / Depth / Matrix / Lab. No.	Organic Constituent(s):	Total (ppm)	Metal Constituent(s):	TCLP (ppm)	Radiological Constituent(s):		Other Analyses:	
MW 1178	2,4-D	<0.001	Barium	0.362	Total U (ppm)	39.0	Alpha (pCi/g)	29.0
0" - 6"	Silvex (2,4,5-TP)	<0.0005	Mercury	0.00054	Total Th (ppm)	<18.0	Beta (pCi/g)	37.0
Soil			Chromium	<0.500	U-234 (pCi/g)	14.0		
910711-077			Lead	<0.200	U-235 (pCi/g)	0.63		
			Silver	<0.050	U-236 (pCi/g)	0.33		
					U-238 (pCi/g)	13.0		
					Th-228 (pCi/g)	1.2		
					Th-230 (pCi/g)	3.8		
					Th-232 (pCi/g)	0.80		
MW 1177	2,4-D	<0.001	Barium	0.572	Total U (ppm)	<11.0	Alpha (pCi/g)	10.0
Surface	Silvex (2,4,5-TP)	0.00088	Mercury	<0.0002	Total Th (ppm)	<18.0	Beta (pCi/g)	<21.0
Concrete			Chromium	<0.500	U-234 (pCi/g)	<3.8		
910715-101			Lead	<0.200	U-235 (pCi/g)	<0.18		
			Silver	<0.050	U-236 (pCi/g)	<0.052		
					U-238 (pCi/g)	<3.7		
					Th-228 (pCi/g)	1.4		
					Th-230 (pCi/g)	1.1		
					Th-232 (pCi/g)	0.59		
MW 1177	2,4-D	<0.001	Barium	0.340	Total U (ppm)	<11.0	Alpha (pCi/g)	48.0
0" - 6"	Silvex (2,4,5-TP)	<0.0005	Mercury	<0.0002	Total Th (ppm)	<18.0	Beta (pCi/g)	52.0
Soil			Chromium	<0.500	U-234 (pCi/g)	<3.5		
910715-100			Lead	<0.200	U-235 (pCi/g)	<0.19		
			Silver	<0.050	U-236 (pCi/g)	<0.13		
					U-238 (pCi/g)	<3.7		
					Th-228 (pCi/g)	1.3		
					Th-230 (pCi/g)	2.1		
					Th-232 (pCi/g)	1.2		

Review of Analyses

ATTACHMENT B
Part I

Project Name: Guard Posts for MWs
Mat. Type: Concrete/Soil
Revised: 05-03-93

Well No.: / Depth / Matrix / Lab. No.	Organic Constituent(s):	Total (ppm)	Metal Constituent(s):	TCLP (ppm)	Radiological Constituent(s):		Other Analyses:	
MW 1199	2,4-D	<0.001	Barium	0.21	Total U (ppm)	239.0	Alpha (pCi/g)	59.0
Surface	Silvex (2,4,5-TP)	<0.001	Mercury	<0.003	Total Th (ppm)	<18.0	Beta (pCi/g)	73.0
Concrete			Chromium	0.31	U-234 (pCi/g)	63.0		
910716-074			Lead	0.13	U-235 (pCi/g)	3.8		
			Silver	0.03	U-236 (pCi/g)	0.60		
					U-238 (pCi/g)	79.0		
					Th-228 (pCi/g)	0.96		
					Th-230 (pCi/g)	8.1		
					Th-232 (pCi/g)	1.7		
MW 1199	2,4-D	<0.001	Barium	1.01	Total U (ppm)	2027.0	Alpha (pCi/g)	800.0
0" - 6"	Silvex (2,4,5-TP)	<0.001	Mercury	<0.003	Total Th (ppm)	30.0	Beta (pCi/g)	660.0
Soil			Chromium	0.40	U-234 (pCi/g)	790.0		
910716-075			Lead	0.18	U-235 (pCi/g)	32.0		
			Silver	0.05	U-236 (pCi/g)	8.1		
					U-238 (pCi/g)	670.0		
					Th-228 (pCi/g)	2.2		
					Th-230 (pCi/g)	27.0		
					Th-232 (pCi/g)	3.8		

-5200

ATTACHMENT C

REMOVAL ACTION #20 "STABILIZATION OF UNH INVENTORIES"

TEST DATA REPORT

June 1993

Fernald Office
U. S. Department of Energy
Fernald Environmental Management Project
7400 Willey Road
Fernald, Ohio 45030

Fernald Environmental
FERMCO
Restoration Management Corporation P.O. Box 398704 Cincinnati, Ohio 45239-8704 (513) 738-6200

-5200

January 29, 1993

U. S. Department of Energy
Fernald Environmental Management Project
Letter No. C:OP:93-156

Mr. James J. Fiore, Acting Manager
DOE Field Office, Fernald
P. O. Box 398705
Cincinnati, Ohio 45239-8705

Dear Mr. Fiore:

CONTRACT DE-AC05-020R21972, TEST DATA REPORT (PTA 90-2/3-003, REV. 1) DISPOSITION OF REFINERY URANYL NITRATE SOLUTIONS.

Attached is the Test Data Report for PTA 90-2/3-003, Rev. 1, Disposition of Refinery Uranyl Nitrate Solutions, for DOE-Operational Readiness Evaluation (ORE) team review.

This is the Final Test Data report for the first 20,000 gallons of UNH that was processed under Removal Action #20. The primary recommendation of the Test Data Report is to complete all further batches of UNH under a Standard Operating Procedure (SOP). All other recommendations will be implemented before seeking authorization to proceed.

FERMCO will complete a Readiness Review (RR) for the next phase of the UNH processing under the SOP and will submit the results to DOE for review by the DOE-ORE team. The new Standard Operating Procedures will be forwarded as soon as they are completed.

Very truly yours,

N. C. Kaufman
President

NCK:DJD:tln
Attachments

cc: R. Campbell
J. King
J. Long
D. Paine
File Record Storage Copy 102
J. Simak, DOE/FN
J. Thiesing, w/o attachment
R. Warner, DOE/FN

bc: Stephen Beckman
Jackie Black
Mike Crosier
Mel Crotzer
Raymond Eng
Donald Fleming
Robert Gardner
Cathy Glassmeyer
Kenneth Kolthoff
Jerry Ogg
Frank Peters
Kareld Solomon
Thomas Walsh

-5200

Test Report Issue Date: February 1, 1993

TEST DATA REPORT

Test Procedure Number: PTA 90-2/3-003, Rev.1

Test Title: DISPOSITION OF REFINERY URANYL NITRATE SOLUTIONS

Date(s) of Test: 30 June, 1992 - 20 November, 1992

Test Sections Covered by this Report: First batch in F1-26

Test Report Prepared By: Bruce Y. Ledbetter
Startup Engineer

Approved: 1-28-93
Manager - Operations Readiness and Startup

Approved:
Manager - CRU3

Approved: 1/29/93
Manager - RSO Operations

Approved: for Don Paine 1/28/93
Vice President - Environmental Health & Safety

5200

1.0 INTRODUCTION 3

2.0 SUMMARY OF RECOMMENDATIONS 3

3.0 TEST RESULTS 4

3.1 SUMMARY OF TEST RESULTS 4

3.2 SUMMARY OF TEST 4

3.3 COMPARISON OF TEST RESULTS WITH TEST REQUIREMENTS 10

4.0 SUMMARY OF PROCEDURE CHANGES 16

5.0 SUMMARY OF TEST EXCEPTIONS 18

6.0 SUMMARY OF RADIOLOGICAL SURVEY DATA 18

7.0 SUMMARY OF INDUSTRIAL HYGIENE SURVEY DATA 18

8.0 RECOMMENDATIONS 19

TABLES
1. UNH FILTERING OPERATIONS
2. ANALYSIS SUMMARY - TCLP
3. ANALYSIS SUMMARY - MC&A
4. ANALYSIS SUMMARY - TANK 25A(FILTRATE)

ATTACHMENTS
1. SUMMARY OF UNH RADIOLOGICAL SURVEY DATA
WEMCO:IRS&T(RA&I):92-315

2. SUMMARY OF INDUSTRIAL HYGIENE SURVEY DATA
M:ESH:92-010

3. MEF-1186 UNH SUMP CAKE

190

1.0 INTRODUCTION

Approximately twenty tanks in the Refinery area contain uranyl nitrate solutions in various concentrations. The total quantity amounts to approximately 226,000 gallons of solution which contains a nominal 100 metric tons of uranium (MTU). The extended storage of this previously designated work in process (WIP) material as a liquid is not a desirable arrangement. The possibility of leakage from valves, flanges, and other fittings could generate adverse publicity, be a potential threat to the environment, and create additional emergency operations. These tanks of solution were prepared as the initial step of purification, but the Refinery will not function again to process uranium as in the past. Therefore, it is desirable to convert the currently dissolved uranium into a solid form which would be much more amenable to extended storage, shipping, etc.

The Refinery has not been in service since September, 1988 and none of the equipment was maintained. All piping was pressure tested in a System Integrity Test prior to commencing the PTA. The equipment is to be tested in the PTA.

2.0 SUMMARY OF RECOMMENDATIONS

The contents of tank F1-26 were processed per this procedure as an initial test to provide assurance that the product could be precipitated, pumped, filtered, drummed, and sampled. The Health and Safety plan was assessed for the proper requirements.

The processing was judged to be successful in that all of these objectives were met.

The PTA was written to process all of the UNH and the first blend was to be used to smooth out the process. After the first blend was complete, a partial test report was to be issued. This Test Report is being issued as a final, because it is our recommendation to complete the process under a SOP rather than continuing on with the PTA.

The existing Health and Safety plan developed for this PTA and changed due to problems encountered under this PTA should be kept in effect as a reference document under the SOP.

The following corrective actions implemented by Unusual Occurrence Report ORO-WEMCO-FMPC-1992-0075 should be incorporated into the SOP and and any further training:

1) All personnel given Conduct of Operation training stressing verbatim compliance to procedures.

2) Personal NO_2 monitors to be worn by personnel.

3) Personnel trained to the Health and Safety Plan and lessons learned due to the incident.

4) None of the tanks, except the holding tanks in the refinery sump, will be heated.

5) Lexan covers installed on the manholes of the blend tanks with a small sliding door for level measurement.

6) All blends will take place in blend tank F1-25. F1-25 has an installed vent fan, F1-26 does not.

7) At least one roof exhaust fan in digestion shall be running during any blending operation.

8) Allow leeway on the precipitation temperature and pH and the blend volumes.

9) All changes affecting operating parameters should be reviewed and approved by DOE/FN.

The RCRA sampling plan should be changed to require only 10% sampling.

This process should be used for any UNH produced during cleanup for safe shutdown and/or CERCLA/RCRA closure.

3.0 TEST RESULTS

3.1 Summary of Test Results

A. The UNH blend when diluted to approximately 50 g-U/l can be precipitated, pumped, and filtered using existing equipment.

B. It is not necessary to use lime in tank F1-610 to increase the pH of the slurry to above 7.0.

C. It is not necessary to dilute the $Mg(OH)_2$ slurry prior to use.

D. Analytical results show both the filter cake and filtrate to be non-RCRA.

3.2 Summary of Test

The Test Log was started on 6/30/92 after receiving permission from DOE to commence testing. Test Exception's 1 through 20 were written before testing began to cover open work orders on the system. Test

Change Notice(TCN) #1 was written to add a DOE required hold point after the first batch was processed.

The initial valve lineups commenced on 7/6/92 and continued through 7/10/92.

The original first blend recipe was to consist of the following:

F1-26	16,114 gallons
F1-25	3,000 gallons
F2-607	3,000 gallons
D1-2	1,000 gallons

Since the agitator on tank F2-607 had not yet been repaired, 3000 gallons from tank F2-608 were substituted. The substitution did not affect the isotopic level of the blend since all four NFS tanks are isotopically identical.

After tank F2-608 was heated for several hours, no temperature change was seen on the installed thermometer. The thermometer read 110°F, but a small amount of orange fumes were seen at the vent stack. A portable thermometer was inserted through the manhole and read 147°F. The NFS tanks contain material with a high solids content and it is suspected that solids have accumulated at the bottom of the tank and insulated the installed temperature probe.

Approximately 3000 gallons of UNH were pumped from tank F2-608 to blend tank F1-26 at a temperature of 147°F. The decision to pump at a temperature outside the specified temperature range of 120°-130°F was discussed with all present and based on:

a) While pumping out of tank F2-608, outside air would be entering the vent line and fumes would not be escaping.

b) The temperature range of 120-130° F was an arbitrary selected range for heatup of the material in the tanks to ensure that the temperature would not exceed 150° F during the precipitation step. Tank F2-608 was not being heated up for the precipitation step but being heated up to dissolve any UNH not in solution.

The blend was completed by the addition of approximately 2100 gallons from tank D1-4. The blend recipe was revised to allow tank D1-4 to be pumped to below a flange that was leaking. Tank D1-2 will be used in future blends. During heating of tank D1-4 the temperature reached 135°F which was outside the procedure specified range of 120°-130°F. Several

factors contributed to this:

a) An operator was not left in the area to continuously monitor the heatup. Industrial Hygiene limited the operator stay times because of the heat. Once a heatup rate was established an operator went in periodically to take temperatures.

b) The operator was not instructed to turn off the steam at any particular temperature.

c) Once the temperature was in the range, it took longer than expected to dress the pumping team in PPE and reenter the area to close the steam inlet valve.

UNH was pumped from D1-4 until the level was below the leaking flange. Approximately 2100 gallons were transferred out of tank D1-4 into tank F1-26. At the end of the transfer the IH technician reported a high NO_2 reading on his Draeger tube. A few minutes later an alarm sounded in digestion. One of the operators was potentially exposed to high levels of NO_2 while investigating the alarm and not wearing his airline.

The test was put on hold until an investigation could occur and corrective actions could be implemented (Unusual Occurrence Report ORO-WEMCO-FMPC-1992-0075).

Permission to restart was given on 3 September, 1992. The following are corrective actions implemented prior to restart:

1) All personnel were given Conduct of Operation training stressing verbatim compliance to procedures.

2) The Health and Safety Plan was changed to include new personnel NO_2 monitors to be worn by personnel.

3) All personnel were trained to the changes in the Health and Safety Plan and lessons learned due to the incident.

4) The procedure was changed. None of the tanks, except the holding tanks in the refinery sump, will be heated.

5) Lexan covers were installed on the manholes of the blend tanks with a small sliding door for level

measurement.

6) All further blends will take place in blend tank F1-25. F1-25 has an installed vent fan, F1-26 does not.

7) At least one roof exhaust fan in digestion shall be running during any blending operation.

8) The procedure was changed to allow leeway on the precipitation temperature and pH and the blend volumes.

9) All Test Change Notices(TCN) affecting operating parameters would be reviewed and approved by DOE/FN.

Isotopic sample analysis of the first batch was .977% U^{235}.

Refinery Sump hold tank F1-608 was filled with 5000 gallons of water. 4973 gallons of UNH were transferred from F1-26 using the level gauge on tank F1-608. When an inspection of the level readings on F1-26 was done, it was found that only 3700 gallons were transferred out of F1-26. An investigation showed that the gauge at F1-608 had been calibrated for water and was reading approximately 20% high for UNH. A metal tape was then attached alongside the sightglass of tank F1-608 for reading all future levels.

Precipitation began on 10 September, after the pH probe on tank F1-609 was replaced. The initial filling and precipitation in tanks F1-609 and F1-610 took two days. The process was placed on standby with the agitators running for the weekend. On Monday morning, 14 September, it was discovered that the steam valves for heating up tank F1-608 had leaked over the weekend. The temperature in tank F1-608 was 160° F. Approximately 700 gallons of water from tank F2E-601 were added to tank F1-608 to lower the temperature. The high temperature in tank F1-608 did not produce any visible fuming out of the stack nor did the MDA single point NO_2 monitors alarm. A different set of block valves will now be used to control the steam to tank F1-608.

After again replacing the pH probe for tank F1-609, precipitation of the contents of tank F1-608 was completed on 15 September. A new type of pH probe was ordered with input from the Instrument Mechanics. 7460 gallons of slurry were pumped to Plant 8. 5600 gallons were left in tank F1-609, and enough slurry was left in tank F1-610 to cover the pH probe.

On 16 September, the first product was filtered on the East Eimco filter. The filter cake produced initially was very dry and dusty. Some of the dust was not caught by the packaging station dust collector. Per the Health and Safety Plan, the drumming station operators were wearing respirators and no airborne contamination was detected. Maintenance built an extension to the chute and the filter operators adjusted the cut on the filter to produce a wetter cake.

Tank F1-608 was filled with approximately 10,000 gallons of filtrate water from Plant 8 and 8030 gallons of UNH from tank F1-26. After filling, a small leak was discovered at a flange on tank F1-608. The leak was contained in a diked area near the area sump. The flange was tightened and the leakage was washed to the sump. The AEDO declared this a loggable event(92-09375).

On 17 September, during third shift, a Plant 8 operator attempted to pump water from tank F2E-601 to Plant 8. The valve in the line from the Refinery Sump to Plant 8 had been closed the previous day after UNH was pumped to Plant 8. The valve in the line to Plant 8 is within several feet of a valve in the Refinery Thickener Slurry(RTS) line and both are chain operated valves. In the dark the operator pulled the wrong chain and opened the valve in the RTS line which was an unused and untested line. A flange on the line leaked and spilled a couple of gallons of low level contaminated water on the ground. The AEDO declared this a loggable event(92-09376). The filled line was drained to a sump and sent to Plant 8 as UNH.

While performing the valve lineup prior to resuming precipitation, it was observed that the diaphragm on the $Mg(OH)_2$ pump had ruptured. The diaphragm was replaced, but the head refused to seal. The pump was replaced.

A leak was also discovered on the bottom sightglass of tank F1-608. The AEDO declared this a loggable event(92-09377) since none of the leakage was outside of the diked area. The sightglass was tightened to stop the leak.

On 18 September, tank F2E-601, which was being used for sump water, was discovered to be contaminated with UNH. This either resulted from the previous day's filling of the unused line or because the transfer line from F1-26 to F1-608 was not flushed adequately. Flushing of all lines will be now done until clear water appears at the destination tank. The contaminated water in tank F2E-

601 was treated as UNH.

A blanked flange near the bottom of tank F1-608 started leaking about a pint every 5 minutes. The AEDO declared this a loggable event(92-09378). The contents of tank F1-608 were transferred to tank F2E-601. The blank was discovered to be Monel and therefore incompatible with nitric acid. No stainless steel blanks of the required size were available, so a Monel blank was installed with a full faced teflon gasket. The monel will not come into contact with the UNH in the tank.

WEMCO management directed that all flanges within the UNH systems be evaluated for the correct material. After a full inspection of all the systems, no other monel flanges were found.

TCN-25 was written on 5 October, to allow the contents of tank 13 in the General Sump to be sent to the High Nitrate Tank prior to receiving sample results. This was necessary because of the time required to receive Ba & Cr results.

On 20 October, the process water line that supplies seal water to the Eimco filter vacuum pumps ruptured. Vacuum was lost to both filters. UNH processing was on hold for three days for repairs to the process water line and placing the filters back on line.

On 5 November, a bomb threat was called into the FEMP. While searching the digestion area, the supervisor noticed that a leak on tank D1-2 had increased from the last time he had seen it. This was a previously known leak that was being collected in a bucket and was being monitored daily by a HWMU inspector.

It was decided by WEMCO management and concurred with by DOE to empty tank D1-2. While performing the valve lineups, it was discovered that approximately 2 ft. of piping was missing from the discharge side of the D1-2 pump. The pump had been replaced, but the piping hadn't been replaced yet. Maintenance replaced the piping and the contents of D1-2(3068 gallons) were transferred to blend tank F1-25, which contained 20,000 gallons This will make up the blend for the second batch. Tank D1-2 was flushed with water to tank F1-25.

On 6 November, the last precipitate from the first batch was sent to Plant 8 and the precipitation tanks were flushed out with water.

On 14 November, the filter from an air sampler above tank 203A in Plant 8 was discovered to be coated with a yellow material. A further investigation of the area

showed equipment in the area of tank 203A to also be coated with a yellow material, the same color as the UNH slurry. This event was given the number ORO-WMCO-FMPC-1992-0127. The dust was caused by blowing down the sump water transfer line into tank 203A. Tank 203A was half full of UNH slurry and there was a coating of dried slurry on the inside of the tank. The Plant 8 procedure will be changed to blow down the transfer line to one of the digester tanks. The open flanges on top of tank 203A have been covered.

On 20 November, the last of the UNH slurry was filtered.

3.3 Comparison of Test Results with Test Requirements

Under Purpose/Scope in the PTA, Section 1.1

All uranium solutions now stored in the various tanks located in the Refinery area will be converted to a solid form and packaged for storage. The contents of the tanks will be blended to reduce each composite blend to an isotopic level less than 1.00% U^{235}. The solutions will also be blended to achieve a nominal uniform concentration of < 100 g U/liter prior to precipitation and filtration. The product filter cake will be packaged into drums.

Test Result:

A. The contents of tank F1-26 plus 3069 gallons out of tank F2-608 and 2103 gallons out of tank D1-4 were blended to a isotopic level of .977% U^{235} and a concentration of 107.1 g U/liter.

B. The Blend was diluted at least 1:1 in the refinery sump hold tank F1-608.

C. The filter cake was double drummed in 48/55 overpacks.

Under Purpose/Scope in the PTA, Section 1.2

Twenty tanks in the Refinery area contain uranyl nitrate solutions in various concentrations. The total quantity amounts to approximately 226,000 gallons of solution, with a nominal 100 Metric Tons of Uranium (MTU). The criterion for this PTA is to develop the optimum parameters and methods for converting various solutions of Uranyl Nitrate into a stable filter cake that can be stored in drums. The PTA outlines parameters for blending, pH adjustment, precipitation methods, and filtering techniques that will be used.

Specific parameters will be determined for various concentrations as they are blended and precipitated. This will be done by first, blending the solutions to a uniform mix, adding water to create the optimum concentration for neutralization, then precipitating the uranium from solution by magnesium hydroxide and lime addition, filtering the slurry, and loading into drums. The filtrate will be analyzed to verify full recovery of uranium from filtration and acceptable levels of other contaminants. The drums of filter cake product will be sampled and analyzed for final inventory control and material classification.

Test Result:

A. The first batch was blended to obtain the following results:

F1-26	16,114 gallons	128 g/l	.991% U^{235}
F2-608	3,000 gallons	79 g/l	1.000% U^{235}
D1-4	2,000 gallons	138 g/l	.955% U^{235}

F1-26) 16,114 gallons * 3.785 l/gal =
60,991.49 l • 128 g-U/l =
7,806,910.72 g-U • .991% U^{235} =
77,366.49 g-U^{235}

F2-608) 3,000 gallons • 3.785 l/gal =
11,355.00 l • 79 g-U/l =
897,045.00 g-U * 1.00% U^{235} =
8,970.45 g-U^{235}

D1-4) 2,000 gallons • 3.785 l/gal =
7,570.00 l • 138 g-U/l =
1,044,660.00 g-U * .955% U^{235} =
9,976.5 g-U^{235}

Total U = 9,748,615.72 g
Total U^{235} = 96,313.44 g
% U^{235} = .99

Total liters = 79,916.49
Total g-U/l = 121.99

B. The analytical results are as follows:

107.1 g-U/l
.977% U^{235}

C. The first batch was successfully blended to < 1% U^{235}.

D. The final dilution in the refinery sump hold tank to approximately 50 g-U/l was

satisfactory. The thickness of the slurry was acceptable at this concentration and no problems were encountered with pumping to Plant 8.

E. Hydrated Lime Slurry $Ca(OH)_2$ was used initially in tank 610, but it was found that continued lime addition was not necessary to raise the pH. While maintaining a pH of approximately 5.5 in tank 609, it was found that the residence time produced by the cascading effect into tank 610 allowed the $Mg(OH)_2$ sufficient time to bring the pH up to approximately 7.5. The automatic flow control valve for $Mg(OH)_2$ addition was found to be of insufficient capacity. The automatic flow control valve was bypassed and with the bypass fully open, pH control was easily maintained at 5.5 with the UNH inlet valve.

F. The initial, too dry cuts on the Eimco filter were corrected by taking a deeper cut. In addition an extension chute was installed on the drumming station to minimize any further releases. During the filtering run it was noticed that filtering efficiency was very erratic from shift to shift. This is due to several reasons:

a) Different experience levels between the operators on each shift.

b) Shutting the filter down for lunch breaks and shift turnover.

Another problem was encountered with the filtering operation. There was excessive in leakage on both vacuum pumps seals for the Eimco filters. Leakage is designed into the seals to maintain the vacuum and to cool the pumps but this seal leakage amounted to approximately 3000 gallons per day which went to tank 25A. Seal water was provided by process water. This was an unnecessary 3000 gallons a day of process water that was being sent to the high nitrate tank. Maintenance installed a new pump and repiped the seal water lines to allow seal water to be provided from either process water or recycling the contents of tank 25A to the seals.

G. 487 drums were produced accounting for 8 lots

of 60 drums. The first two lots were analyzed for isotopic concentration and TCLP metals. The rest of the lots were analyzed only for TCLP metals. A summary of the results is attached as Table #2.

H. MC&A samples were also taken on the same lot schedule and a summary of the results is attached as Table #3.

Under Purpose/Scope in the PTA, Section 1.3

The conversion to solid form will be conducted in a series of ten or more "batches", each of which will be designed to mix solutions from two or more tanks that will satisfy the enrichment criteria of <1.00% U^{235} and concentration standards of < 100 g U/l. Before each solution is transferred from its storage tank to the blending tank, it will be heated to approximately 125°F and mixed to dissolve all settled material. The heating will be performed by steam jackets or steam jet spargers as determined by the Test Coordinator (TC). The TC will determine the sequence of the batches and will make adjustments to the specific recipes when required to maintain acceptable results.

Test Result:

A. The analytical results of the first batch are as follows:

107.1 g-U/l
.977% U^{235}

B. The source tanks will no longer be heated prior to blending. The source tanks will be agitated and all settled material will be dissolved with nitric acid and flushed when the tank is empty.

C. The Test Coordinator with concurrence from the area supervisor adjusted the recipe of batch #1 for operational concerns to maintain acceptable results. All further batches will be adjusted as necessary.

Under Purpose/Scope in the PTA, Section 1.4

Blending of solutions will be done in blend tanks F1-25 & F1-26, located in the refinery digestion area. The contents of the blend tanks will be thoroughly mixed. Transfers from the various storage tanks will be made in accordance with the designated piping routes and the

blend recipes. Transfers are predetermined by the TC and shown in Section 1 of the "Batch Information and Record Sheet," (Attachment 1) to achieve the desired concentration and isotopic result. All tanks of uranyl nitrate solution will be heated and agitated prior to transfer. As each storage tank is emptied, it will be rinsed/flushed with nitric acid and/or water to assure removal of all uranium-containing solution and bottom sediment. Nitric Acid is stored in tanks F1-23, F1-24, and F3E-220. Each batch will be held in the blend tank until authorization is received from the Test Coordinator to proceed (based on analysis results).

Test Result:

A. The first blend batch was done in tank F1-26. All further blends will take place in tank F1-25, which has an installed vent fan.

B. When tank D1-2 was emptied, it was flushed with water. There was no sediment in the bottom of D1-2 that needed nitric acid to dissolve.

Under Purpose/Scope in the PTA, Section 1.5

Each blend batch will be transferred through the designated pipe route to receiving tank F2E-601 or F1-608 in the refinery sump. All health and safety requirements in SOP 2-C-601 will be followed during processing in addition to the Task Specific Health and Safety Plan requirements. The precipitation will be brought about by the addition of magnesium hydroxide slurry purchased in bulk tanker truck quantities. If required, Hydrated Lime Slurry $Ca(OH)_2$ will also be added to optimize full precipitation. Tank 12 in the General Sump will receive each tanker truck load of $Mg(OH)_2$. The as-received slurry will be diluted with water as needed for use. The magnesium hydroxide (MgOH) slurry will be periodically transferred to the MgOH makeup tank (F1-617). The precipitate slurry will be transferred to Plant 8 receiving tanks F1-203/F1-203A. The optimum concentration will be determined by the TC based on results of prior laboratory test results and prior filtration under this PTA.

Test Result:

A. Hydrated Lime Slurry $Ca(OH)_2$ was used initially in tank 610, but after the initial addition it was discovered that the lag time of the slurry going through 610 was sufficient to allow the pH to increase to approximately 7.5.

B. It was not necessary to dilute the $Mg(OH)_2$ slurry prior to use.

C. The final dilution in the refinery sump hold tank to approximately 50 g-U/l was satisfactory. The thickness of the slurry was acceptable at this concentration and no problems were encountered with pumping to Plant 8.

Under Purpose/Scope in the PTA, Section 1.6

The slurry from the refinery sump will be received in Plant 8 and filtered on the East and/or West Eimco filter, according to SOP 8-C-116 "Filtering Refinery Thickener Underflow". All health and safety requirements in the SOP will be followed in addition to the Site Specific Health and Safety Plan specific requirements. The wet filter cake will be collected into drums and packaged according to the FEMP Lot Marking and Color Coding System. Sampling will be performed according to Sampling Plan #0001 dated January 17, 1992 (Attachment D). After sampling in Plant 8, the drums will be stored on the Plant 1 pad until the analysis of the filter cake is complete. If determined to have RCRA constituents, the drums will be subject to all applicable hazardous waste rules and regulations. If determined non-RCRA, the drums will be transferred to a non-RCRA storage area.

Test Result:

A. The filter cake has been determined to be non-RCRA(Attachment # 3). A summary of the analysis results is attached as Table #2. The drums are being stored on the Plant 8 East pad.

Under Purpose/Scope in the PTA, Section 1.7

An organizational chart is included in Attachment C designating the lines of authority for this project. The operation is to be controlled by the Manager of Facilities & Warehousing. Systems Engineering, Project Management, and IRS&T personnel will be matrixed to the Area Supervisor who will direct the operations. The Test Coordinator (TC) will be the Project Engineer.

Test Result: N/A

Under Requirements/Acceptance Criteria in the PTA, Section 2.1

All UNH batches have been blended to <1.00% U^{235} as verified by analysis.

Test Result:

A. The analytical results for the first batch are as follows:

107.1 g-U/l
.977% U^{235}

Under Requirements/Acceptance Criteria in the PTA, Section 2.2

The following tanks have been emptied of UNH solutions and washed with nitric acid and/or water:

Test Result:

A. Tank D1-2 was emptied and flushed with water.

4.0 Summary of Procedure Changes

TCN - 001, Impact Level 2

Added DOE requested hold point after first batch.

TCN - 002, Impact Level 4

Changed initial valve lineup to conform to prints.

TCN - 003, Impact Level 4

Deleted an inaccessible valve from checklist.

TCN - 004, Impact Level 4

Added sump water valves to checklists.

TCN - 005, Impact Level 4

Added sump water valves to checklists.

TCN - 006, Impact Level 4

Deleted stuck open, but isolated valve from checklist.

TCN - 007, Impact Level 4

Deleted valve from checklist. Valve removed and blank flange installed.

TCN - 008, Impact Level 4

Added sump water valves to checklists.

TCN - 009, Impact Level 4

Added sump water valves to checklists.

TCN - 010, Impact Level 4

Added sump water valves to checklists.

TCN - 011, Impact Level 4

Reduced tank heating limits and deleted heating tank D1-10.

TCN - 012, Impact Level 4

Deleted tank heating for blend tanks.

TCN - 013, Impact Level 4

Added minimum requirements for pre-shift briefings.

TCN - 014, Impact Level 3

Added requirement for running at least one roof exhaust fan in digestion.

TCN - 015, Impact Level 3

Added operation of tank F1-25 vent fan to checklists.

TCN - 016, Impact Level 3

Added requirement for blending to be done only in tank F1-25.

TCN - 017, Impact Level 2

Broadened temperature range for $Mg(OH)_2$ addition.

TCN - 018, Impact Level 2

Broadened pH range for $Mg(OH)_2$ addition.

TCN - 019, Impact Level 3

Deleted source tank heating.

TCN - 020, Impact Level 2

Broadened volume transfer allowance.

TCN - 021, Impact Level 4

Corrected typo on checklist.

TCN - 022, Impact Level 4

Deleted sump water valves on checklist.

TCN - 023, Impact Level 4

Deleted agitation of tanks F2E-601 and F1-608.

TCN - 024, Impact Level 3

Deleted automatic flow control to tank F1-609.

TCN - 025, Impact Level 2

Allow Plant 8 to send filtrate to General Sump after receiving U, pH, and Cu results but before receiving Cr and Ba results.

5.0 Summary of Test Exceptions

TE #1 through #20 - Track open work orders to specific checklists.

TE #21 - Track open sump water valves to checklists 36 & 37.

6.0 Summary of Radiological Survey Data

Both Plant 2/3 and Plant 8 are "Contamination Areas" requiring full anti-contamination clothing for entry. There have been a total of 3 personal contamination events as a result of UNH operations. PCM's have been installed at both the Refinery Sump and Plant 8 control points. See Attachment #1 for more details.

7.0 Summary of Industrial Hygiene Survey Data

Personal NO_2 monitors with data logging capabilities were purchased after the NO_2 overexposure event of 13 July. After extensive data taking at the Refinery Sump area the personnel respiratory protection requirements were reduced. See Attachment # 2 for more details.

8.0 Recommendations

The original plan was to perform this PTA until all the UNH had been processed. It is our recommendation now that this PTA be turned into a SOP. The process and equipment have been tested enough for a SOP to be sufficient to process the rest of the UNH. The following recommendations should be incorporated into the SOP's:

Plant 2/3

1. The source tanks should not be heated. During the investigation into the NO_2 over exposure it was found that most of the source tanks contain up to 4N nitric acid.

2. The blends should only be made in tank F1-25. F1-25 is the only blend tank with an installed vent fan.

3. During any blending operation in the digestion area, at least one roof exhaust fan should be running. This will help dilute any NO_2 fumes that may escape during outage measurements.

4. UNH blends should be diluted to approximately 50 g-U/l prior to precipitation.

5. The Plant 2/3 procedure should be changed to require lining up the transfer line to a digestor when air blowing the line.

6. Emptied tanks should only be flushed with cold water.

Plant 8

6. The Plant 8 filtering SOP should be changed to proceduralize the use of recycled filtrate from tank 25A.

7. The second and third shift filter operators should be retrained by the first shift operator. This will help to increase the efficiency of filter operations on the back shifts.

8. The filters should not be shut down for shift changes. Greater filter efficiency will be realized if the operators relieve on station.

9. Complete the installation of the new Eimco filter and filter UNH on both old Eimco filters.

UNH FILTERING OPERATIONS ON THE EAST EIMCO FILTER

DATE	GALLONS	DRUMS	POUNDS	HOURS
16-Sep-92	700	2	626	8.0
17-Sep-92	4,700	10	7,146	12.3
18-Sep-92	0	0	0	0.0
21-Sep-92	27,000	5	1,550	24.0
22-Sep-92	33,000	3	853	23.0
23-Sep-92	32,500	3	511	24.0
24-Sep-92	29,800	1	295	24.0
25-Sep-92	5,000	0	0	4.0
28-Sep-92	25,000	3	816	20.0
29-Sep-92	23,100	12	4,614	22.0
30-Sep-92	7,800	23	10,555	20.0
01-Oct-92	2,500	8	3,792	6.0
02-Oct-92	0	0	0	0.0
05-Oct-92	0	0	0	0.0
06-Oct-92	2,600	9	4,196	8.0
07-Oct-92	4,330	21	9,134	14.0
08-Oct-92	3,000	12	5,578	8.0
09-Oct-92	3,300	5	1,732	6.0
12-Oct-92	10,500	13	5,766	16.0
13-Oct-92	6,200	25	11,711	17.0
14-Oct-92	4,300	6	2,757	12.0
15-Oct-92	0	0	0	0.0
16-Oct-92	10,000	12	4,275	12.0
19-Oct-92	8,920	19	8,462	18.0

DATE	GALLONS	DRUMS	POUNDS	HOURS
20-Oct-92	0	0	0	0.0
21-Oct-92	0	0	0	0.0
22-Oct-92	1,500	12	5,090	14.0
23-Oct-92	2,000	6	2,959	8.0
26-Oct-92	9,037	24	9,277	24.0
27-Oct-92	5,230	18	7,076	15.0
28-Oct-92	5,953	28	14,003	22.0
29-Oct-92	1,850	10	4,248	6.0
30-Oct-92	8,800	25	9,657	16.0
02-Nov-92	390	1	495	2.0
03-Nov-92	6,500	13	5,281	16.0
04-Nov-92	5,796	29	13,243	24.0
05-Nov-92	2,270	15	7,803	10.0
06-Nov-92	342	2	788	4.0
09-Nov-92	10,130	28	10,548	24.0
10-Nov-92	12,200	8	2,358	13.0
11-Nov-92	0	0	0	0.0
12-Nov-92	4,400	21	9,092	16.0
13-Nov-92	2,650	5	2,038	7.0
16-Nov-92	18,700	12	3,720	13.0
17-Nov-92	17,193	22	9,257	19.0
18-Nov-92	17,000	7	1,889	15.0
19-Nov-92	4,500	5	1,504	4.0
20-Nov-92	5,000	4	1,000	8.0
TOTALS	385,691	487	205,695	578

TABLE #1

208

5200

ANALYSIS SUMMARY - TCLP

METAL	As	Pb	Se	Ag	Ba	Cd	Cr	U-235
UNITS	mg/L	mg/L	mg/L	mg/L	mg/L	mg/L	mg/L	Wt % U
LIMIT	5	5	1	5	100	1	5	1
LOT #								
1	<0.01	<0.003	<0.005	0.036	0.369	<0.005	0.017	0.987
2	<0.01	<0.003	<0.005	<0.01	<0.2	<0.005	<0.01	0.986
3	<0.01	<0.003	<0.005	<0.01	0.4597	<0.005	<0.01	
4	<0.01	<0.003	<0.005	<0.01	0.3596	<0.005	<0.01	
5	<0.01	<0.003	<0.005	<0.01	<0.2	<0.005	<0.01	
6	<0.01	<0.003	<0.005	<0.01	0.3423	<0.005	<0.01	
7	<0.01	<0.003	<0.005	<0.01	0.3291	<0.005	<0.01	
8								

Blanks indicate sample results not back yet.

TABLE #2

ANALYSIS SUMMARY - MC&A

	ANALYSIS		WEIGHT		
	URANIUM	MOISTURE	TOTAL	U	U
UNITS	%	%	lbs	lbs	Kg
LOT #					
1	9.78	60.5	24466	2392.77	1086.32
2	8.89	40.5	27291	2426.17	1101.48
3	9.52	38.5	25509	2428.46	1102.52
4	10.5	41.6	25599	2687.90	1220.30
5	10.4	43.1	26155	2720.12	1234.93
6	11.1	42.5	24579	2728.27	1238.63
* 7			23971		
* 8			23289		
		TOTAL =	200859	15383.69	6984.193

* = Sample results not back yet.

TABLE #3

ANALYSIS SUMMARY - Tank 25A(Filtrate)

ANALYSIS	U	pH	Cu	NO3	Ba	Cr	Pu-239	Th-230	Np-23
UNITS	lbs/gal		mg/L	mg/L	ug/L	ug/L	pCi/mL	pCi/mL	pCi/m
AnaLIS ID #									
920917-024	0.000210	7.9	0.06						
920918-011					<200	51.4	<0.093		
920921-134	0.000110	8.2	0.02	670					
920922-071	0.000050	8.7	<0.01	168.4					
920923-157	0.000010	8.1	<0.01						
920929-017	0.000005	10.9	0.01						
921001-004	0.000030	8.4	0.07	11048	500	<10	<0.093	<0.059	
921005-031	0.000009	7.8	0.04	3557	790.3	<10	<0.019	0.036	
921008-015	0.000110	7.8	0.06	9338	249.2	<10	<0.0086		
921010-004	0.000020	7.8	0.10	10491	228.8	<10	<0.0086	<0.46	
921012-117	0.000280	8.2	0.03	1177	308.3	23.2	<0.0086	0.031	
921014-004	0.000090	8.0	0.09	4937	313.6	<10	<0.019	0.046	
921017-011	0.000070	8.4	<0.01	1405	42.1	35	0.018	<0.051	
921020-033				10413	1502	14.6	<0.0099		
921023-165	0.000060	7.8	0.07	6286	368.5	30	<0.0086		
921026-153	0.000030	8.0	0.04	5018	265.7	<10			
921028-069	0.000100	8.1	0.09	10952	301.5	16.3			
921030-001	0.000040	7.8	0.14	10724	534.5	23			
921030-049	0.000190	8.1	<0.01	3379	291.7	<10			
921103-050	0.000017	8.0	<0.01	1307	<200	<10			
921104-053	0.000080	7.9	0.05	9411	337.2	12.3			
921106-001	0.000070	8.0	0.03	8959	454.7	<10			
921109-017	0.000006	7.8	<0.01	736	35.8	25.5			
921110-001	0.000250	8.1	0.04	6457	<200	67.5			
* 921111-029	0.000900	8.6	0.02	1581	<200	115.6			
* 921111-030	0.000790	8.4	0.02						
** 921112-007	0.000560								
921113-011	0.000140	8.0	0.10	7732	<200	179.5			
921116-086	0.000100	8.6	0.02	1027	<200	95.3			
921118-003	0.000090	8.0	0.16	9136	410.3	139.3			
921119-065	0.000100	8.5	0.07	500	<200	85.8			
921120-075	0.000100	8.2	0.04	228	<200	<10			

TABLE #4

* = Out of spec on U

** = Resample of 92111-029

*** = Resample of 92111-030(U still out of spec - Refiltered water)

Blanks indicate either sample not requested or sample results not back yet.

ATTACHMENT # 1

5200

From: K. R. Tschaenn

WEMCO:IRS&T(RA&I):92-315

Date: 11-30-92

Subject: SUMMARY OF UNH RADIOLOGICAL SURVEY DATA

To : D. J. Dravland

Routinely collected air sample, surface contamination, and dose-rate radiological survey data has been compiled and summarized to provide information on radiological conditions in the UNH process areas.

Here is the breakdown of the processing areas:

I Refinery Area:

- Average contamination levels (removable) have been measured to be less than 1000 dpm/100 cm^2 alpha (1600 max.) and less than 1000 dpm/100 cm^2 beta/gamma (21,000 max.). The entire Refinery area (involved with UNH process) is posted as a "Contamination Area", requiring full anti-contamination clothing for entry.
- Airborne radioactivity levels have been routinely less than 2% of the DAC for uranium.
- Dose-rates have been measured to be less than 2.0 mrem/hr for both whole-body skin and whole-body penetrating radiations.
- There have been no positive urineanalysis results due to UNH operations in both the Refinery area and Plant 8.
- There have been 2 personnel contamination events (1 skin) as a result of UNH operations in the Refinery area.
- A PCM (whole-body Personnel Contamination Monitor) has been installed at the Refinery Area UNH control point.

II Plant 8:

- Average contamination levels (removable) have been measured to be less than 1000 dpm/100 cm^2 alpha (4000 max.) and less than 1000 dpm/100 cm^2 beta/gamma (20,000 max.). The entire building is posted as a "Contamination Area", requiring full anti-contamination clothing for entry.

ATTACHMENT 7

WEMCO:SS(F&W):92-487 5200

From: C. A. Glassmeyer (6554)

Date: November 17,1992

Subject: SOILED AIR SAMPLER FILTER ON NOVEMBER 14, 1992

To : R. L. Gardner

A critique was held on Tuesday, November 17, 1992, to discuss event number ORO-WMCO-FMPC-1992-0127, a soiled air sampler filter which was discovered at approximately 1100 hours on Saturday, November 14, 1992. Those in attendance were:

Dan Billingsley	1495	Site Services Chemical Operator
Bob Bischoff	7425	Site Services Area Supervisor
Billy Bowling	107	Site Services Supervisor
Jim Canaday	7615	Radiological Safety Technician
Terry Collins	1095	Site Services Chemical Operator
Matt Eberle	6929	Radiological Safety Technician
Henry Fuller	7008	Radiological Safety Technician
Cathy Glassmeyer	644	Site Services Senior Staff Engineer
Kevin Tschaenn	341	Radiological Safety Engineer

When processing of UNH began in Plant 8, an air sampler for uranium was placed on the second floor directly above tank 203A. The filter on this sampler is removed every day a counted to determine if the airborne levels in Plant 8 exceed the respiratory protection requirement level, 25 percent of the derived air concentration (DAC).

When the filter was removed at 1048 on November 14, it was coated with yellow material. The Rad Tech who removed the filter showed it to the operator and shift supervisor in Plant 8. The yellow color on the filter was the same color as the neutralized UNH slurry in tank 203A and a light coating of the same yellow dust was seen on process equipment in the area.

On Friday, November 13, water containing low levels of uranium had been pumped from Refinery Sump tank 608 to tank 203. When tank 203 was full, the transfer line was flushed with water and blown dry with air into tank 203A. Tank 203A was only half full at the time the line was blown dry with air.

All doors and windows in Plant 8 had been closed by Thursday, November 12, and the heaters had been turned on since the temperature had dropped earlier in the week.

The source of the yellow material on the filter is most likely UNH that had dried on the walls of tank 203A and was blown from the tank during the time the transfer line was blown dry. When the top of the tank was examined on November 14, yellow dust was seen on the top of the tank. Ten open flanges on the top of the tank were also coated with yellow dust. Air currents caused by the first floor heaters carried the dust to the second floor air sampler.

The results of the initial counting of the soiled air sampler filter indicated that the airborne levels were below 25 percent of the DAC. These results confirm that personnel

- General Area (GA) airborne radioactivity levels have been routinely less than 5% of the DAC for uranium. Personal Air Sampling data for samples collected at the Eimco drumming stations have routinely indicated less than 25% of the DAC for uranium. As a result of the collected air sample data, respiratory protection requirements at the ventilated Eimco Drumming Station have been relaxed.

- Dose-rates have been measured to be no greater than 10.0 mrem/hr (whole-body skin) and 2.0 mrem/hr (whole-body penetrating).

- An Off-Normal Occurence Report (ORO-WMCO-1992-0127) was filed upon indication of the release of neutralized UNH slurry from a process holding tank. Refer to attached memo (WEMCO:SS:(F&W)92-487), which discusses this event.

- There have been no positive urineanalysis results due to UNH operations in Plant 8.

- There has been 1 personnel contamination event as a result of UNH operations in Plant 8.

- A PCM (whole-body Personnel Contamination Monitor) has been installed at the Plant 8 area control point.

K. R. Tschaenn, Technologist II
Radiological Assessment & Instrumentation

KRT/

c: B. Ledbetter

in Plant 8 were not exposed to airborne uranium levels requiring use of a respirator.

Attached is an Event and Causal Factors Chart that details the event in flow chart form and a discussion of the root causes and recommendations to eliminate each root cause.

The two actions have been initiated to ensure that air levels above tank 203A remain as low a possible based on the recommendations from the root cause analysis are:

1. Blanks will be installed on the open flanges on tank 203A.

2. When the transfer line is blown dry, the line will be open to the digester tanks which contain very low levels of uranium. This will minimize airborne uranium caused by blowing the transfer line dry.

Catherine A. Glassmeyer
Senior Staff Engineer

c: Bob Bischoff
Billy Bowling
Jim Canaday
Matt Eberle
Henry Fuller
Tim Huey
Brenda Perkins
Kevin Tschaenn

5200

216

Event and Causal Factors Chart
ORO-WMCO-FMPC-1992-0127
RADIONUCLIDE MATERIAL DETECTED ON TOP OF TANK 203A

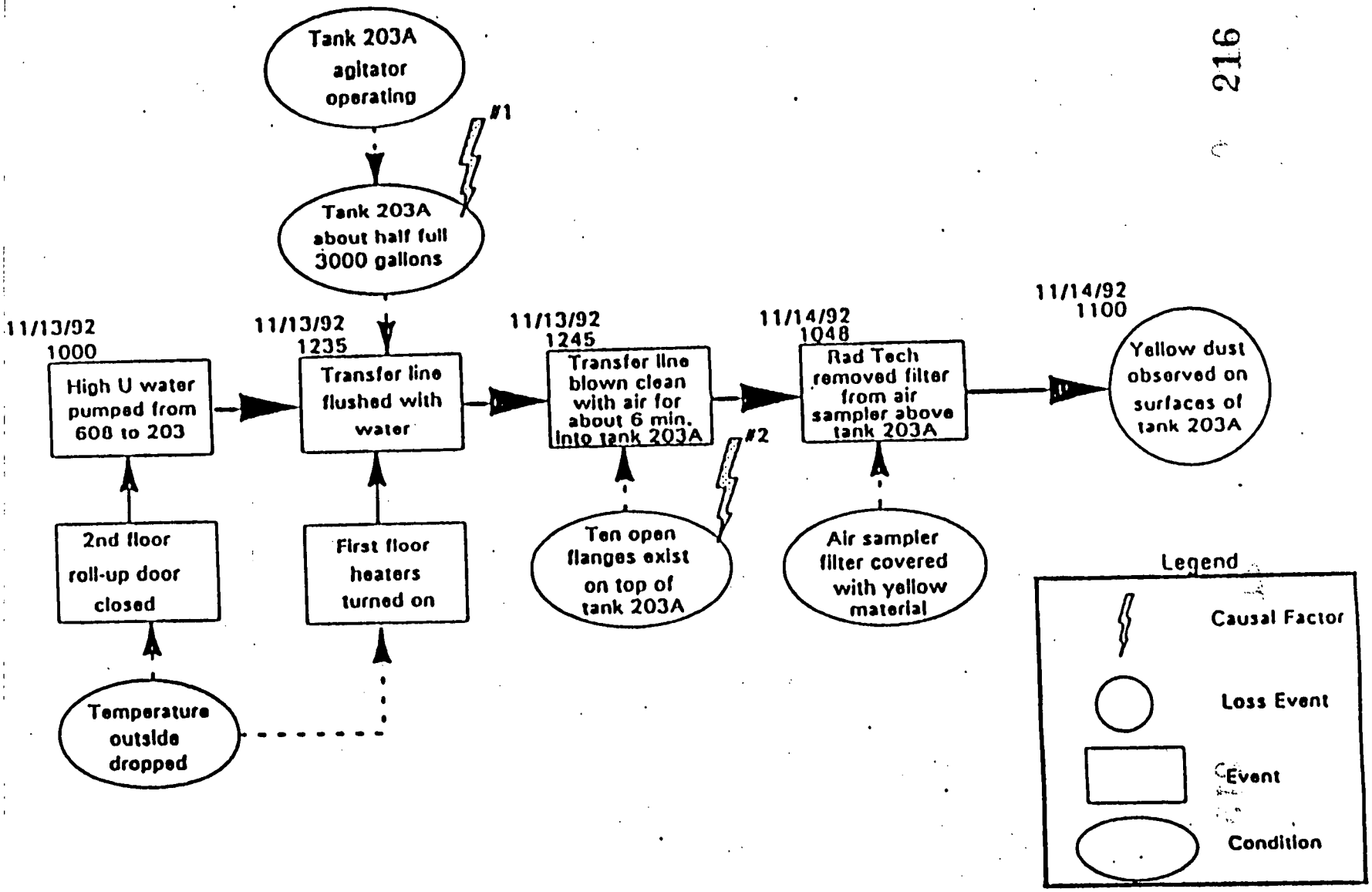

-5200

ROOT CAUSE SUMMARY TABLE

Causal Factor #1	Paths Through Root Cause Tree	Recommendations
Since tank 203A was only half full, air was blown into the void space above the liquid UNH. Background The fill line for tank 203A extends several feet into the tank. Normally the tank is full when the transfer line is blown out and the air enters the tank below the liquid level. Since the tank was only half full, the air entered above the liquid level and blew UNH that had dried on the walls of the tank into the air.	• Operations Difficulty • Production Organization • Procedures • Wrong/Incomplete • Incomplete/Situation Not Covered	Revise procedure for transferring from Refinery Sump to Plant 8 to state that the transfer line should be blown out to the digesters. (F&W)

217

5200

ROOT CAUSE SUMMARY TABLE

Causal Factor #2	Paths Through Root Cause Tree	Recommendations
Ten open flanges existed on top of tank 203A that allowed dust to escape from the tank when the transfer line was blown out. **Background** Tank 203A has been used for numerous different processes during the operational history of Plant 8. When process lines that were no longer in service were disconnected from tank 203A, the connecting flanges were not blanked.	• Operations Difficulty • Production Organization • Management Systems • Configuration Control • Control of Design/Field Changes LTA	Install blanks on all flanges when disconnected from process lines. (Maintenance and F&W) Install blanks on open flanges on tank 203A before additional UNH is transferred to the tank. (Maintenance and F&W)

218

ATTACHMENT # 6

-5200

FERMCO
Fernald Environmental Restoration Management Corporation

INTEROFFICE MEMORANDUM

To:	Bruce Ledbetter	Date:	December 10, 1992
Location:	Fernald	References:	DE-AC05-920R21972
From:	Walt Mengel WHM	FERMCO #:	M:ESH:92-010
Location:	Fernald	Client:	DOE
Extension:	6231	Subject:	Summary of Chemical Air Sampling During UNH Project PTA

cc: D. A. Fleming

This letter summarizes Industrial Hygiene's chemical air samples collected during the UNH PTA campaign.

Results:

Results are summarized in four tables according to how the measurements were made. Table 1 is a summary of all samples collected by traditional industrial hygiene sampling methods: TEA active sorbent tubes for NO and NO2, silica gel active sorbent tubes for nitric acid, and Palmes passive diffusion sorbent tubes for NO2. Filters were used for collection of soluble/insoluble uranium samples.

Table 2 summarizes NO2 levels which were measured with the Metrosonics pm-7700 monitor/dataloggers worn by employees. Rather than show all the one minute averages, the average and 15 minute (STEL) levels during the run period are shown. If the detailed information is needed, a filename is listed for retrieving the complete information. The highest average level was 0.2 ppm and the highest STEL was 1 ppm.

Table 3 summarizes readings collected by the Draeger 190 monitor/dataloggers. The highest readings were those obtained by monitors placed in the Refinery Sump dilution passive stack. High STEL readings at this location were reported to be 24, 23, 89, 40, 63, and 81 ppm. These high readings were unexpected. Despite the high readings in the stack to tank 608, the highest reading at the Refinery Sump catwalk, located only five feet away, was only 0.2 ppm.

DOCUMENTMEMOS

FERMCO
Restoration Management Corporation

NTEROFFICE MEMORANDUM

Bruce Ledbetter
December 10, 1992
Page 2

Discussion:

A variety of sampling devices were used during the UNH campaign. Traditional type samples requiring later laboratory analysis were collected with filters (Uranium), sorbent tubes (NO, NO2, HNO3), and passive dosimeter (Palmes) tubes (NO2). The Palmes passive sampler was expected to replace the pump with active sorbent tubes; however, after the first batch was run, it was learned that the laboratory could not achieve the expected sensitivity, and therefore the samplers did not have the ability to measure a STEL of 1 ppm on a 15 minute exposure. After the initial samples for NO and HNO3 which produced very small or non-detectable concentrations, no further sampling was done for these contaminants.

Real-time instruments with high concentration alarms with and without datalogging capabilities were also used for area, stack, and personal NO2 monitoring. Three MDA Single Point monitors were used as needed during operations in NFS tank area, Digestion area, and the Refinery Sump for area monitoring. The MDA monitors were set to alarm at 0.5 ppm and were located on the catwalk, inside the sump building, and at the base of tank 608 at the General Sump. The MDA monitors performed well except for the evening of 9/9/92 when one went into fault 36. This was supposedly thermostat related, but did not recur, so the monitor was not repaired.

Draeger short-term indicator tubes were used for spot measurements prior to 8/26/92. Draeger tubes had the disadvantage that the IH technician always had to follow a crew around to make measurements and there was no continuous data logging. After the five Draeger 190 NO2 personal monitors were received, they were used with alarm points at 14.5 ppm to warn airline users to leave areas approaching the 50 ppm NO2 IDLH level. The alarm point of 14.5 ppm was used instead of half the IDLH level (25 ppm), because after the monitors were received it was discovered that the potentiometer used to set the alarm point would only go as high as 14.5 ppm. Draeger 190 monitors were also used for area and stack monitoring at the Refinery Sump. One problem with the Draeger 190 monitors was that the sleep keys kept breaking their pins off. Industrial Hygiene ordered one new pin then used bent wires to short out the correct pins to put the monitor to sleep. Another Draeger 190 monitor had a problem with an erratic baseline.

FERMCO
Fernald Environmental Restoration Management Corporation

ITEROFFICE MEMORANDUM

Bruce Ledbetter
December 10, 1992
Page 3

All Draeger monitors had internal software which was inferior to that built into the Metrosonics monitors. The Draegers only alarmed when the instantaneous level exceeded the alarm setpoint, whereas the Metrosonics could alarm when either the instantaneous, 15 minute average (STEL), or projected 8-hour time weighted average (TWA) level was exceeded. The accompanying personal computer software with the Draeger 190 monitors was also less sophisticated than the Metrosonics. For example, it was impossible to print graphs with the Draeger software unless an Epson printer were present.

Finally, the Draeger 190 sensors were worn on the belt instead of the breathing zone as was the Metrosonics. The difference between the two was apparent when on 9/4/92 an operator took long outage leaning over the manhole atop tank 608 in the Refinery sump wearing two Palmes e passive NO2 monitors on the lapel and a Draeger 190 on his belt. The Palmes tubes easured 3.1 ppm over a half hour sample in which the Draeger 190 only averaged 0.0 ppm and a 0.1 ppm STEL.

Ten Metrosonics pm-7700 monitor/dataloggers were put into service on 10/21/92. These were set to alarm differently depending on whether or not the wearer was using a supplied air respirator which are the only type providing protection against NO2. People not using any respirators or only an air-purifying respirators were given a Metrosonics which would alarm whenever the instantaneous level of NO2 exceeded 1.0 parts per million (ppm) or the level averaged over 15 minutes (STEL) exceeded 1 ppm. Employees using airline respirators which provide NO2 protection up to the IDLH level of 50 ppm wore monitors which alarmed whenever instantaneous NO2 levels exceeded 15 ppm.

Some difficulty was experienced with the low level alarming Metrosonics monitors, because susceptibility to radio frequency interference (e.g. from FM radio transmissions or arcing on AC motor startup) caused false alarms. This was compounded by the fact that the Metrosonics ceiling alarm was based on a short 1/4 second measurement, which could allow spikes to trigger the alarm. Several false alarms were experienced on 10/26/92, yet monitors in the Refinery Sump stacks showed no NO2, and the workers wearing the monitors were not performing any activities which would be expected to produce elevated levels of NO2. Testing the monitors with a keyed FM radio could produce a 0.7 ppm reading. The manufacturer had no suggestions for how to rectify this problem other than to see if a Radio Shack ferrite filter around the cord connecting the monitor/alarm speaker pod to the base unit might reduce the interference. The nufacturer also was unwilling or unable to change the software to allow users to define their n ceiling averaging interval, which would lessen the value of a few 1/4 second readings during

Fernald Environmental
FERMCO
Restoration Management Corporation

INTEROFFICE MEMORANDUM

spikes.

After a while it became apparent that there was no detectable NO2 at the Refinery Sump. Therefore it was decided on 9/11/92 to allow operators downstairs and up on the catwalk to keep an airline respirator handy to put on if their Draeger or Metrosonics monitor started alarming at the 0.5 ppm level. However, airline was still mandatory for all work such as sampling or outage taking around the tops of the tanks. This greatly reduced the potential for heat stress.

A few short-term NO2 Draeger tube samples were collected over tanks 203 and 203A in Plant 8 on 9/29/92. As expected since there is only MgU_2O_7 present and no nitric acid, all readings were zero. However, there were somewhat elevated radioactivity levels measured by the Radiological Safety continuous air monitor at the Oliver Filters attributed to aerosols formed when the blowing out the transfer line.

The initial problems experienced with NO_2 emissions from the blend tanks in the Refinery Digestion area were controlled when the ventilation exhaust was turned on for F1-25 and plexiglass lids were installed over the tank manholes. This reduced NO_2 levels from 100 ppm to near zero.

WHM:ldj
Attachments

ID NO.	DATE	AREA	CONT	MED.	TIME		RESP	DESCRIPTION
26633	07/13/92	P.2/3 DIGESTION	HNO3	SGT	300	0.013	DF	NO EXHAUST/DILUTION VENTILATION TAKING TANK OUTAGES EMPLOYEE TOOK TANK D1-4 & F1-25 OUTAGES. WORE PUMP 75 MIN. REST OF TIME PUMP WAS AT CONTROL POINT WHERE NO2-0 PPM.
26634	07/13/92	P.2/3 DIGESTION	NO	TEA	300	0.3	DF	SAME
26635	07/13/92	P.2/3 DIGESTION	NO2	TEA	300	5.6	DF	SAME
26711	07/12/92	NFS TANKS	HNO3	SGT	285	0.04	DF	OUTDOORS, CALM DAY SAMPLING NFS TANK F2-608 SAMPLER WAS WORN FOR ONE HOUR DURING THE DAY, REST OF TIME WAS AT CONTROL POINT.
26712	07/12/92	NFS TANKS	NO	TEA	285	0.09	DF	SAME
26713	07/12/92	NFS TANKS	NO2	TEA	285	0.06	DF	SAME
26716	07/21/92	NFS TANKS	NO	TEA	50	0.9	FFA	OUTSIDE, CALM, CLOUDY MAINTENANCE ON NFS TANK F2-607 MAINTENANCE REMOVING GEARBOX AND PUMP FROM NFS TANK F2-607.
26717	07/21/92	NFS TANKS	NO2	TEA	50	0.3	FFA	SAME
26718	07/21/92	NFS TANKS	HNO3	SGT	50	< 0.08	FFA	SAME
26882	08/11/92	P.2/3 DIGESTION	NO2	PT	23	< 0.5	DF	W.ROLLUP DOOR 1/3 OPEN. BREEZE. WALK THROUGH INSPECTION DOE DEFENSE BOARD WALK THROUGH INSPECTION OF UNH IN DIGESTION AREA. NO OPERATIONS.
26883	08/11/92	P.2/3 DIGESTION	NO2	PT	16	< 0.7	DF	SAME
26932	08/13/92	P.2/3 DIGESTION	NO2	PT	70	< 0.2	FFA	AREA VENTILAT'N FANS OPERATING LIDDING TANKS W. PLEXIGLASS OVER TANKS F1-25 AND F1-26 IN DIGESTION APPLYING PLASTIC COVER.
26933	08/13/92	P.2/3 DIGESTION	NO2	PT	70	< 0.2	FFA	SAME

ID NO.	DATE	AREA	CONT	MED.	TIME	PPM	RESP	DESCRIPTION
26948	08/18/92	NFS TANKS	NO2	PT	20	0.43	FFA	OUTSIDE WORKING ON TOP OF NFS TANKS NFS TANKS SOUTH OF PLANT 1 SILOS. 4 SAMPLES TAKEN 1 FROM EACH TANK.
27047	09/11/92	REFINERY SUMP	NO2	PT	90	< 0.06	FFA	OUTDOORS 5 MPH WEST WIND NEUTRALIZING UNH TANK 609/610 ON TECHNICIAN WHILE ON CATWALK AT REFINERY/GENERAL SUMP.
27059	09/04/92	REFINERY SUMP	NO2	PT	31	3.1	DF	OUTDOORS, HUMID, WESTERLY WIND TAKING OUTAGE TANK 608 HAD TO GO UP ON TANK FOR DIFFERENT LIGHT & TAPE MEASURE. 1.4 INCH PALMES TUBE.
27060	09/04/92	REFINERY SUMP	NO2	PT	31	3.1	DF	OUTDOORS, HUMID, WESTERLY WIND TAKING OUTAGE TANK 608 HAD TO GO UP ON TANK FOR DIFFERENT LIGHT & TAPE MEASURE. 2.8 INCH PALMES TUBE.
	07/12/92	NFS TANKS	S-U I-U	FIL	285	<0.003 <0.003	DF	ON EMPLOYEE WHILE TAKING OUTAGE ON NFS TANK F2-608. WORE SAMPLER FOR 1 HOUR, REST OF TIME SAMPLER RAN AT THE CONTROL POINT.
	07/13/92	DIGESTION	S-U I-U	FIL	300	<0.005 <0.005	DF	ON EMPLOYEE WHILE PUMPING FROM TANK D1-04 TO F1-25 IN DIGESTION.

NOTES:

- DF - MSA DuoFlo Airline
- FIL - Filter sampler
- FFA - MSA Full-Face Airline
- HNO3 - Nitric acid
- I-U - Insoluble Uranium
- NO - Nitric oxide
- NO2 - Nitrogen dioxide
- PPM - parts per million
- PT - Palmes tube
- SGT - Silica gel tube
- S-U - Soluble Uranium
- TEA - Triethanolamine sorbent tube

FEEDHOUSE	HOR. S/N	DATE	RUN TIME	AVE PPM	STEL PPM	STEL TIME	DESCRIPTION
77003	1649	10/21/92	1101-1509	0.0	0.0	1232	ON TWO EMPLOYEES WORN SEQUENTIALLY WHILE PUMPING MGU208 TO PLT.8
77007	1656	10/26/92	0926-1351	0.0	0.1	1223	ON TWO EMPLOYEES WORN SEQUENTIALLY WHILE HEATING 608, NEUTRALIZING, & PUMPING TO PLT.8
77009	1661	10/26/92	0921-1401	0.0	0.0	1055	ON TWO EMPLOYEES WORN SEQUENTIALLY WHILE HEATING 608, NEUTRALIZING, & PUMPING TO PLT.8
770010	1662	10/26/92	0924-1406	0.2	0.4	1020	ON TWO EMPLOYEES WORN SEQUENTIALLY WHILE HEATING 608, NEUTRALIZING, & PUMPING TO PLT.8
770014	1658	10/26/92	0859-1345	0.2	0.4	0846	ON TWO EMPLOYEES WORN SEQUENTIALLY
770011	1649	10/28/92	0753-1334	0.0	0.1	0918	ON TWO EMPLOYEES WORN SEQUENTIALLY
770012	1656	10/28/92	0753-1338	0.0	0.0	1225	ON TWO EMPLOYEES WORN SEQUENTIALLY
770013	1661	10/28/92	0756-1342	0.0	0.1	0903	ON TWO EMPLOYEES WORN SEQUENTIALLY
770015	1662	10/28/92	0754-1347	0.0	0.1	0850	ON TWO EMPLOYEES WORN SEQUENTIALLY
770017	1661	10/30/92	0801-1517	0.0	0.0	0907	ON TWO EMPLOYEES WORN SEQUENTIALLY
770018	1649	11/02/92	0843-0837 (11/03/92)	0.0	0.0	1005	ON TWO EMPLOYEES WORN SEQUENTIALLY

225

-5200

FILENAME	MON. S/N	DATE	RUN TIME	AVE PPM	STEL PPM	STEL TIME	DESCRIPTION
770019	1658	11/03/92	0819-1351	0.1	0.2	0855	ON TWO EMPLOYEES WORN SEQUENTIALLY. PUMPED 608 AND NEUTRALIZED IN 609.
770020	1661	11/03/92	0818-1353	0.2	0.4	0919	ON TWO EMPLOYEES WORN SEQUENTIALLY. PUMPED 608 AND NEUTRALIZED IN 609.
770021	1650	11/05/92	1342-1751	0.1	0.2	1638	ON ONE EMPLOYEE WHILE PUMPING OUT OF LEAKY D1-2 TO F1-25.
770022	1652	11/05/92	1344-1800	0.0	1.0	1629	ON ONE EMPLOYEE IN AIRLINE RESP. WHILE PUMPING OUT OF LEAKY D1-2 TO F1-25.
770023	1657	11/05/92	1335-1801	0.0	0.4	1645	ON ONE EMPLOYEE IN AIRLINE RESP. WHILE PUMPING OUT OF LEAKY D1-2 TO F1-25.
770024	1651	11/05/92	1342-1800	0.0	0.0	1708	ON ONE EMPLOYEE IN AIRLINE RESP. WHILE PUMPING OUT OF LEAKY D1-2 TO F1-25.
770025	1650	11/06/92	0759-1231	0.1	0.3	0947	ON EMPLOYEE IN DIGESTION WHILE TRANSFERRING UNH FROM TANK D1-2 TO F1-25.
770026	1651	11/06/92	0758-1236	0.0	0.1	0805	ON EMPLOYEE IN DIGESTION WHILE TRANSFERRING UNH FROM TANK D1-2 TO F1-25.
770027	1652	11/06/92	0750-1238	0.0	0.0	0958	ON EMPLOYEE IN DIGESTION WHILE TRANSFERRING UNH FROM TANK D1-2 TO F1-25.

FILENAME	MON. S/N	DATE	START	RUN TIME	PPM	STEL PPM	STEL TIME	DESCRIPTION
DRILL-1	9109077-004	08/26/92	08:00	01:50	0.0	0.0	08:00	ON OPERATOR AT TOP OF F1-25. UNH LEAK DRILL.
DRILL-2	9109077-008	08/26/92	08:00	01:56	0.0	0.0	08:00	ON OPERATOR ON TOP OF F1-1. UNH LEAK DRILL.
DRILL-3	9109077-003	08/26/92	08:00	02:01	0.0	0.0	08:00	ON TEST COORDINATOR. DIGESTION. UNH LEAK DRILL.
1122-9-3	9109077-004	09/03/92	12:50	70:01	0.0	0.0	12:08	ON OPERATOR AT DIGESTION F1-26. BOTTOM OF TANK F1-26.
7504-9-3	9109077-011	09/03/92	13:00	40:01	0.0	0.0	13:05	ON IH TECHNICIAN DIGESTION AND 2/3 SUMP. MONITORED BOTH AREAS.
807-9-3	9109077-003	09/03/92	13:00	10:01	0.0	0.0	13:02	ON OPERATOR AT REFINERY SUMP. INSIDE REFINERY SUMP BLDG.
STACK9-3	9109077-008	09/03/92	08:50	66:39	2.7	24.2	13:16	IN 608 STACK. REFINERY SUMP. PASSIVE VENT.
1419-9-4	9109077-004	09/04/92	14:47	00:40	0.0	0.1	15:12	ON OPERATOR AT 608 MANHOLE. OUTAGE READING.
TOP9-9-9	9109077-004	09/09/92	11:53	06:47	0.0	0.0	11:53	ATOP CATWALK AT REFINERY SUMP.
BOT9-9	9109077-011	09/09/92	11:50	03:20	0.0	0.0	11:50	AT BOTTOM OF CATWALK REFINERY SUMP.
609-9-9	9109077-008	09/09/92	09:40	00:01	0.0	23.4	09:41	INSIDE 609 STACK. REFINERY SUMP. 609/10 STACK.
608-9-9	9109077-003	09/09/92	09:52	06:33	31.1	89.8	11:41	IN 608 STACK. REFINERY SUMP. MOVED TO TOP OF STACK AT 12:05.

FILENAME	MON. S/N	DATE	START RUN TIME	AVE PPM	STEL PPM	STEL TIME	DESCRIPTION
AREA-9-9	9109077-008	09/09/92	17:30 15:44	0.1	0.3	09/09/92 02:46	AREA MONITOR ON CATWALK AT REFINERY SUMP.
1240-910	9109077-011	09/10/92	09:40 02:05	0.0	0.0	09:40	ON OPERATOR DURING REPAIR PH PROBE AT REFINERY SUMP TANK 609.
BOT-9-10	9109077-008	09/10/92	12:43 01:40	0.0	0.0	12:43	ON BOTTOM OPERATOR AT REFINERY SUMP.
TOP-9-10	9109077-011	09/10/92	11:50 03:21	0.0	0.0	11:50	ON TOP OPERATOR AT CATWALK.
609-9-10	9109077-004	09/10/92	09:37 06:27	0.3	0.6	11:38	IN STACK OVER TANK 609.
608-9-10	9109077-003	09-10-92	09:38 06:32	11.3	40.5	13:06	IN STACK OVER TANK 608.
CTWLK911	9109077-008	09/11/92	09:04 05:42	0.0	0.0	09:04	TOP POSITION 9-11. TOP OF POSITION. CATWALK.
BOTT9-11	9109077-004	09/11/92	09:05 05:45	0.0	0.0	09:05	BOTTOM POSITION 9-11. BOTTOM. BOTTOM OF REFINERY SUMP.
609ST911	9109077-011	09/11/92	08:35 06:43	0.0	0.1	08:49	609 STACK.
608ST911	9109077-003	09/11/92	08:30 06:52	23.0	63.7	09:24	INSIDE 608 STACK.
608ST914	9109077-003	09/14/92	08:30 05:48	30.0	81.8	10:42	INSIDE 608 STACK.
609ST914	9109077-008	09/14/92	08:38 05:55	0.0	0.0	08:38	INSIDE 609 STACK.
TOP9-15	9109077-003	09/15/92	08:19 05:31	0.0	0.1	08:49	TOP POSITION. CATWALK REFINERY SUMP.
BOT9-15	9109077-004	09/15/92	08:20 05:33	0.0	0.0	08:20	BOTTOM POSITION REFINERY SUMP.
608_9-15	9109077-011	09/15/92	08:06 05:47	0.0	0.1	09:44	INSIDE 608 STACK. STEADY STATE NEUTRALIZATION.

FILENAME	MON. S/N	DATE	START RUN TIME	E PPM	STEL PPM	STEL TIME	DESCRIPTION
609_9-15	9109077-008	09/14/92	08:06 05:54	0.0	0.0	08:06	609 STACK. STEADY STATE NEUTRALIZATION.
F126_9-1	9109077-004	09/16/92	12:30 13:19	0.0	0.0	12:01	TANK F-126. OUTAGE FROM 126 TO 608.
F126_916	9109077-004	09/16/92	12:31 03:19	0.0	0.0	12:31	TANK F-126. TAKEN WHILE PUMPING 126 TO 608.
609_916	9109077-011	09/16/92	10:00 05:58	0.0	0.1	10:36	IN STACK AT TANK 608.
CAT_916	9109077-003	09/16/92	13:00 03:07	0.0	0.0	13:07	CATWALK AREA WHILE RECEIVING UNH FROM 2/3.
TESTFILE	9109077-003	09/18/92	08:55 12:23	0.0	0.0	08:55	ON OPERATOR BELOW CATWALK. VARIOUS WORKERS BELOW CATWALK.
TANK_608	003	09/29/92	08:05 07:17	0.0	0.1	08:19	IN STACK ON TANK 608.
609_9-29	011	09/29/92	08:01 07:25	0.1	0.2	9:14	IN STACK ON TANK 609.
DWN_9-29	008	09/29/92	09:30 06:00	0.0	0.2	10:25	DOWN STAIRS. DOWN STAIR WORKER AT REFINERY SUMP.
UP_9-29	004	09/29/92	09:30 06:03	0.0	0.0	09:30	UPSTAIRS WORKER REFINERY SUMP.
UPST10-9	004	10/09/92	10:29 04:27	0.0	0.0	10:29	UP STAIRS REFINERY SUMP.
DWN10-9	9011179-004	10/09/92	10:30 04:29	0.0	0.0	10:30	DOWNSTAIRS AT REFINERY SUMP.
609_10-9	011	10/09/92	09:35 05:23	0.0	0.0	09:35	IN STACK FOR TANK 609.
608_10-9	003	10/09/92	09:40 05:18	0.2	2.0	10:53	IN STACK FOR TANK 608
UPS10-12	004	10/12/92	10:29 05:54	0.0	0.0	10:29	UPSTAIRS AT REFINERY SUMP.

FILENAME	MON. S/N	DATE	START RUN TIME	AVE PPM	STEL PPM	STEL TIME	DESCRIPTION
DWN10-12	9011179-004	10/12/92	10:30 05:58	0.0	0.1	11:39	DOWNSTAIRS AT REFINERY SUMP.
609_10-12	003	10/12/92	08:14 07:15	0.0	0.5	09:08	IN STACK FOR TANK 608.
608_10-12	011	10/12/92	08:14 07:18	0.0	0.0	08:14	IN STACK FOR TANK 609.
----	003	10/14/92	08:00 19:15	1.1	5.8	14:53	IN TANK 608 STACK.
----	011	10/14/92	08:00 11:15	1.1	5.3	15:07	IN TANK 609 STACK.
608_10-15	003	10/15/92	08:30 07:03	0.2	1.6	10:11	IN TANK 608 STACK.
DWN_1015	9011179-004	10/15/92	08:30 06:35	0.0	0.0	08:30	DOWNSTAIRS AT REFINERY SUMP.
UPS_1015	004	10/15/92	08:30 06:33	0.0	0.0	08:30	UPSTAIRS AT REFINERY SUMP.

FMPC
MATERIAL EVALUATION FORM

MEF NO.: 1186

MEF REV. NO.: 1 4/11/92

SECTION 1 - MATERIAL GENERATOR

MTC: 069	2. PLANT AND/OR BULDING NO.: Plant 8	3. PROCESS AREA: Plant 8 Sump
4.	5. MEF NO DATE: 8/24/91 / MEF REV. DATE: 11/16/92	6. MATERIAL PHYSICAL STATE: ☐ Liquid ☐ Gas ☑ Wet Solid (Sludge) ☐ Dry Solid
7. WEIGHT OF FULL CONTAINER? ☐ 100 to 1000 lbs ☐ >1000 lbs.	8. DOES MATERIAL CONSIST OF MORE THAN ONE SUBSTANCE? ☑ YES ☐ NO	
10. COMMON NAMES. Sump (filter) Cake	11. CHEMICAL NAMES. Magnesium Diurinate	
☑ Process Information ☑ MSDS ☐ Container Label ☐ FMPC Lot Code	OTHER	13. SIMILAR MATERIAL NAME: Sump Cake 14. SIMILAR MATERIAL LOT CODE(S):

5 SUSPECTED:

☐ Cresol	☐ Endrine	☐ Methylene Chloride	☐ TBP/Kerosene
☐ m-Cresol	☐ Heptachlor	☐ Motor/Engine Oil	☐ Tetrachloroethylene
☐ o-Cresol	☐ Hexachlorobenzene	☐ Nitrobenzene	☐ 1,1,1-Trichlorethane
☐ p-Cresol	☐ Hexachloroethane	☐ Other Organics	☐ 2,4,5-TP (Silvex)
☐ 2,4-D	☐ Hexachloro-1,3-butadiene	☐ Paint Stripper	☐ 2,4,5-Trichlorophenol
☐ Degreaser	☐ Hydraulic Oil	☐ Paint Thinner/Mineral Spirits	☐ 2,4,6-Trichlorophenol
☐ 1,4-Dichlorobenzene	☐ Ink	☐ Pentachlorophenol	☐ Toxaphene
☐ 1,2-Dichloroethane	☐ Lead	☐ Perchloroethylene	☐ Trichloroethylene
☐ 1,1-Dichloroethylene	☐ Lindane	☐ Pyridine	☐ Unknown
☐ 2,4-Dinitrotoluene	☐ Mercury	☐ Selenium	☐ Vinyl Chloride
☐ Enamel	☐ Methoxychlor	☐ Silver	☐ Xylene
	☐ Methyl ethyl ketone	☐ Synthetic oil	☐ Oil

R SUSPECTING NCES ITY: This is filter cake processed from Plant 2/3 Uranyl Nitrate (MEF #844) which contains Barium and Chromium

B REASON AND QUANTITY: (MSDS if Available)
☐ AEDO Log ☐ MSDS ☐ Prior Evaluation of Similar Material
☑ Physical Evidence ☐ Container Label What Material: ____
☑ Process Information ☐ Sump Report ☐ Spill Database SRC: ____ MTC: ____

CERNS/ NTS: See Below NKF
16. a. SIGNATURE AND DATE: 10-21-91 Gerald Rec
MEF must be (RSIT)

DEPRINT VISUAL INSPEC- MPLETED? ☐ YES ☑ NO | 18. NUMBER OF PHASES: | 19. pH (IF KNOWN): (Attach Lab Results) N/A | 20. FLASH POINT (IF KNOWN): (Attach Lab Results) N/A

TER MPLETED? ☐ YES ☑ NO

E? EXPLAIN:

E? EXPLAIN:

Material a Product or Waste?) Material is a waste

David J. Dravland	EXTENSION: 6540	DATE COMPLETED: September 24, 1991

Completed using ink or a typewriter. Employees shall sign this form.

(RAM) (Safety)
Store Material - all requirements for handling, sampling or processing RAM must be followed MEC x6742
According to D. Dravland, ~~[illegible]~~ U_T ~ C8/D. $^{235}U/^{238}U$ = 0.99
ENG 12/13/91

(Continued on Reverse)

231

ATTACHMENT # 3

12-19

FERMCO

DOCUMENT REVIEW FORM

CHARGE # -5200

DOCUMENT NUMBER:	TITLE: DISPOSITION OF REFINERY URANYL NITRATE SOLUTIONS	DOCUMENT DESCRIPTION: TEST DATA REPORT

REVIEWER:	DIST. DATE:	AUTHOR:	COMMENTS DUE:	1ST DRAFT	FINAL DRAFT
RTP/SARA [redacted] 8472	12/18/92	[redacted] 6946	12/28/92		

*SRC	COMMENTS	COMMENT RESOLUTION
	No comments. Good job on the Report.	

232

REVIEWER'S SIGNATURE AFTER RESOLUTION

DATE

* INDICATES SRC COMMENT

ENVIRONMENT, SAFETY & [illegible] DEPARTMENT

DOCUMENT REVIEW A[illegible] RECORD FORM

ORIGINATING DEPARTMENT.	DOCUMENT ORIGINATOR	COMMENTS DUE BY.	REVIEWING DEPARTMENT. (Name & Date Received)
DOCUMENT TITLE AND IDENTIFYING NUMBER.			REVISION DATE.

ITEM NO	REVIEWER'S NAME	DOC PAGE OR SEC. NO	SRC *✓	COMMENT	COMMENT RESOLUTION
1	RICK GANG KING HAZ. WASTE GROUP 6736	PG. 19-#4		QUANTIFICATION OF LEAKS SHOULD NOT BE HUMAN INSPECTOR RESPONSIBILITY. SHOULD BE FIXING LEAKS AND HAVE HUMAN INSPECTOR NOTE LEAK AND WORK REQUEST ON LOGS BECAUSE WE DON'T WANT IT TO APPEAR WE ARE JUST LETTING THESE LEAKS GO ALONG.	Removed this paragraph, pg
2	RICK ENNENING	PG. 19-#4 PG. 24		HERE AND OTHER PLACES NUMEROUS LEAKS AND COMPONENT PROBLEMS ARE NOTED WHICH SHOULD BE FIXED PRIOR TO RE-STARTING THIS PROCESS TO BE ENVIRONMENTALLY SAFE BUT ACTION OF THIS TYPE IS NOT NOTED.	

232

5200

Checked Comments must be resolved as "SIGNIFICANT REVIEW COMMENTS".

Comment Resolutions(s) Accepted By: [signature] 1/21/93

REVIEWER OR REVIEWING DEPARTMENT REPRESENTATIVE — DATE

(Signature required on SRC * comments only)

HPC-ESH-2027 (8/31/88)

Page No. _____ of _____

ATTACHMENT D
TO THE
CLOSURE PLAN INFORMATION AND DATA
FOR THE
NAR SYSTEM COMPONENTS

Revision 0
June 1993

CRU GUIDELINES FOR THE PREPARATION OF FEMP PROJECT/TASK SPECIFIC HEALTH AND SAFETY PLANS

NOTE: This plan and associated permits shall be reviewed with each worker and be posted at the work site at all times. Review of all of the listed sections is required prior to work start.

CRU3 S&H PLAN GUIDELINE

1.0 CRU3 Description and History

- 1.1 FEMP Site History
- 1.2 Characterization
- 1.3 Define Scope or Goal of the Work
  - 1.3.1 Short Term
  - 1.3.2 Long Term
- 1.4 Goal of this Project

2.0 Work Area (for this project) and Management

- 2.1 Define Work Area within FEMP
- 2.2 Define Management Chain of Command
  - 2.2.1 Program Manager
  - 2.2.2 Project Manager
  - 2.2.3 S&H Officer

3.0 General Safety Requirements

- 3.1 Permits and Postings
- 3.2 Safety Equipment List
- 3.3 Heat Stress
- 3.4 Cold Stress
- 3.5 Material Safety Data Sheets (MSDS) Locations
- 3.6 Illumination
- 3.7 Sanitation at Temporary Worksites
- 3.8 Standard Operating Procedure and Other Requirements

4.0 Site Control

- 4.1 FEMP Requirements
- 4.2 Work Site Requirements for Entry
- 4.3 How Work Site will be defined (Safety Fence - CHAWLWK Fence)
- 4.4 Exclusion Zones

5.0 Training and Education

5.1 Required Training for Entry to Site

5.2 Required Training to Perform Work in the Defined Work Zones

5.3 Operation Training of Construction Type Equipment

5.4 Required Safety Meetings

5.5 Safety Meetings and Daily Work Plans

5.6 Records of Training

6.0 Medical Monitoring and Surveillance

6.1 Required Medical Monitoring

6.2 Required Medical Records

7.0 Personal Protection Equipment Requirements/Engineering Controls

8.0 Required Monitoring and Action Limits

8.1 Air Monitoring
8.1.1 Ambient Air Monitoring
8.1.2 Employee Breathing Zone
8.1.3 Perimeter Air Monitoring

8.2 Rad Monitoring

9.0 Handling Drums & Containers

9.1 Inspection

9.2 Storage

9.3 Transportation

9.4 Monitoring

10.0 Decontamination

10.1 Site Decontamination Requirement

11.0 Hazard (Risk) Assessment and Accident Prevention

11.1 Industrial Hygiene Issues (Identify the Physical, Chemical and Health Hazards)
- 11.1.1 Explosive Chemical Contaminants
- 11.1.2 Heavy Metals
- 11.1.3 Organic

11.2 Radiological Safety Issues (Identify the Physical, Chemical and Health Hazards)

11.3 Industrial Safety Issues (Identify the Physical, Chemical and Health Hazards)

11.4 Fire Protection Issues (Identify the Physical, Chemical and Health Hazards)

11.5 Nuclear Safety Issues (Identify the Physical, Chemical and Health Hazards)

11.6 Natural Occurrence Issue (Weather) (Identify the Physical, Chemical and Health Hazards)

11.7 (Identify and State Action to Correct Each Noted Hazard)

12.0 Emergency/Contingency Plans

12.1 Reporting
- 12.1.1 Numbers
  - 12.1.1.1 Emergency Phone Number
  - 12.1.1.2 Emergency Radio Number
- 12.1.2 Site Notification Procedure
- 12.1.3 What/How to Report

12.2 Evacuation Routes/Accountability
- 12.2.1 Rally Point Accountability
- 12.2.2 Plant Wide Accountability
- 12.2.3 In Place Accountability

12.3 Available Emergency Equipment
- 12.3.1 Site Equipment
- 12.3.2 Plant Equipment
- 12.3.3 Off-Site Equipment

12.4 Emergency Response

12.4.1 Medical Emergencies
12.4.2 Fire Emergencies
12.4.3 Explosion Emergency
12.4.4 Chemical Emergency
12.4.4.1 Splashes
12.4.4.2 Employee Contamination

12.4.5 Radiological Emergencies
12.4.5.1 Releases
12.4.5.2 Employee Contamination

12.4.6 Weather Limitations/Adverse Condition

12.4.7. Accident Investigation

13.0 Changes/Amendments to Safety and Health Plan