6793 U-004-501 .2

FINAL DRAFT RECORD OF DECISION FOR REMEDIAL ACTIONS AT OPERABLE UNIT 2 - APRIL 1995

04/07/95

DOE-0806-95
DOE-FN EPAS
175
DROD

6793

FINAL DRAFT RECORD OF DECISION FOR REMEDIAL ACTIONS AT OPERABLE UNIT 2

FERNALD ENVIRONMENTAL MANAGEMENT PROJECT
FERNALD, OHIO

APRIL 1995

U.S. DEPARTMENT OF ENERGY
FERNALD AREA OFFICE

000001

DRAFT

RESPONSE TO USEPA COMMENTS ON THE PROPOSED DRAFT RECORD OF DECISION FOR OPERABLE UNIT 2

GENERAL COMMENTS

Comment #: 1
Commenting Organization: U.S. EPA Commentor: Saric
Section #: NA Page #: NA Line #: NA Code:
Original General Comment: 1

Comment: The Operable Unit 2 (OU2) draft record of decision (ROD) adopts a waste acceptance criterion (WAC) of 1,080 parts per million (ppm) for total uranium and commits to lowering the WAC to be consistent with other operable units, if necessary. The OU5 WAC for total uranium has now been determined and is 1,030 ppm. The OU2 ROD should adopt the newly determined OU5 WAC for total uranium. This would require changes throughout the ROD wherever WAC are discussed and the addition of a full explanation for why a new WAC is being adopted Section 11 of the ROD.

Response: The Operable Unit 2 and Operable Unit 5 WACs are essentially the same. The difference in number comes from using different models; Operable Unit 2 used the ODAST/SWIFT model and Operable Unit 5 used the ECTran model. For consistency, Operable Unit 2 will adopt the Operable Unit 5 WAC of 1,030 ppm total uranium. This change will be made in all places that reference the WAC of 1,080 ppm. This change will be reflected in Section 11 (Documentation of Significant Changes) of the ROD.

Action: The WAC has been changed from 360 pCi/g of uranium-238, or 1,080 ppm total uranium to 346 pCi/g of uranium-238, or 1,030 ppm total uranium in the following places:

Lines 43-44 of page D-1
Lines 6-7 of page 7-5
Lines 5-6, 10, 13, and 14 of page 9-2
Line 32 of page 10-6
Lines 5-6 of page RS-3-10
Lines 4 and 16 of page RS-3-18
Line 11 of page RS-3-47

The following text has been inserted on line 10 of page 11-1: "One significant change from the Proposed Plan to this ROD, is a change in the maximum waste acceptance criteria for the on-site disposal facility. The Proposed Plan provided a waste acceptance criteria of 360 pCi/g of uranium-238 and 1,080 ppm of total uranium. A waste acceptance criteria of 346 pCi/g of uranium-238 and 1,030 ppm of total uranium was proposed in the Operable Unit 5 Proposed Plan. This difference in waste acceptance criteria is due to using different, but comparable, computer models for the calculations. The Operable Unit 2 and Operable Unit 5 waste acceptance criteria are essentially the same, however for consistency, Operable Unit 2 has adopted the Operable Unit 5 waste acceptance criteria of 346 pCi/g uranium-238 and 1,030 ppm total uranium. This significant change has been reflected in this ROD."

The following text has been inserted on line 4 of page RS-3-20: "Please note that as a result of EPA comments, the waste acceptance criteria for uranium-238 has been changed to 346 pCi/g, or 1,030 ppm total uranium."

The following text was added to the end of line 16 of page RS-3-20: "(although as a result of EPA comments, the waste acceptance criteria for uranium-238 has been changed to 346 pCi/g, or 1,030 ppm total uranium."

Comment #: 2
Commenting Organization: U.S. EPA Commentor: Saric
Section #: 10 Page #: NA Line #: NA Code:
Original General Comment: 2

Comment: Section 10 makes the statutory determinations for the selected remedy. Throughout Section 10, the selected remedy explanation uses the word "would." For instance, the phrases "would meet" and "would need" are used often. Because the remedy is selected, the language in Section 10 should be changed to be more definitive about what the remedy will or will not do. Tentative language using the word "would" is appropriate for the PP, but is not appropriate for the ROD.

Response: Agreed. Section 10 will be reviewed and the word "would" will be changed to "will" in all appropriate places. Additionally, the entire ROD will be reviewed for accurate use of tense.

Action: The word "would" has been changed to "will" in the following places:
Page 10-1: Lines 29, 30, 31, 35, and 36
Page 10-2: Lines 8, 10, 12, 13, 17, 18, 19, 20, 28, 30, and 32
Page 10-2a: Line 1 (twice)
Page 10-3: Lines 5 (twice), 16, 17, 18, 23, and 26
Page 10-4: Lines 1, 4, 6, 10, 12, 16, and 17
Page 10-5: Lines 10 and 13
Page 10-6: Line 37
Page 10-9: Lines 2, 3, and 5
Page 10-10: Line 13
Page 10-11: Lines 5, 6, 7, 9, 10, 12, 14, and 16
Page 10-12: Lines 9, 10, 12, 13, 18, 19, 20, 21, 22, 23, 26, 27, 29 (twice), and 30

The word "would" has been changed to "are" on line 11 of page 10-12.

The phrase "would be" has been changed to "are" on line 9 of page 10-9 and has been changed to "is" on line 31 of page 10-12.

Comment #: 3
Commenting Organization: U.S. EPA Commentor: Saric
Section #: NA Page #: NA Line #: NA Code:
Original General Comment: 3

Comment: Minor typographical and editorial errors were found in the ROD. The ROD should be reviewed and these errors should be corrected. The following are examples of the types of errors found:

Section 3, Page 3-3, Lines 15 and 16: This sentence contains an incomplete parenthetical phrase.

Table 9-1, Pages 9-4 and 0-5, Column 5: The column heading contains the misspelled word "Cleanup."

Response: Agreed. The suggested revisions will be made and the document will be reviewed for any additional typographical errors.

Action: On line 23 of page 2-6, the word "begin" has been replaced with the phrase "be implemented."

The following text was inserted before "in January 1995" on line 26 of page 2-6, "was submitted to EPA and OEPA."

The word "with" was replaced with ")" on line 16 of page 3-3.

The word "a" was inserted before "DOE" and the phrase "was performed" was added to follow "[10 CFR §1022]" on line 10 of page 7-11.

SPECIFIC COMMENTS

Comment #: 4
Commenting Organization: U.S. EPA Commentor: Saric
Section #: Declaration Page #: D-2 Line #: 24 and 25 Code:
Original Specific Comment: 1
Comment: Lines 24 and 25 state that the justification to waive the state disposal facility siting applicable or relevant and appropriate requirements (ARAR) was provided in the feasibility study (FS) report and the proposed plan (PP). This sentence should be revised to state that the justification for the waiver is summarized in the Decision Summary of the ROD and is fully supported by the Administrative Record for OU2. This change is necessary to revise the text to be stated in the present tense and to explain that the ROD also discusses the waiver.

Response: Agreed. The text will be changed to clarify that the justification for the waiver is provided in the ROD and is supported by the Administrative Record.

Action: Lines 24 and 25 of page D-2 and lines 13 and 14 of page RS-3-10 have been revised to read, "The justification for this waiver is provided in the Decision Summary of this ROD and is supported by the Administrative Record for Operable Unit 2."

Comment #: 5
Commenting Organization: U.S. EPA Commentor: Saric
Section #: 9.2 Page #: 9-4 and 9-5 Line #: NA Code:
Original Specific Comment: 2
Comment: Table 9-1 presents cleanup levels for OU2. The cleanup level for lead is not presented in this table. The cleanup level of 400 ppm for lead in soil should be added to Table 9-1.

Response: Agreed. The lead cleanup level of 400 ppm will be added to Table 9-1.

Action: The lead cleanup level has been added to Table 9-1 in the section "SOUTH FIELD (WASTE/SOIL LOCATED OVER THE GREAT MIAMI AQUIFER)" with a footnote stating "The lead cleanup level applies to the Firing Range only, not the entire South Field."

Comment #: 6
Commenting Organization: U.S. EPA Commentor: Saric
Section #: 10.2.1 Page #: 10-2 Line #: 11 Code:
Original Specific Comment: 3

Comment: Section 10.2.1 discusses chemical-specific ARARs and cleanup levels. The acronym "PRLs" in Line 11 should be substituted with the words "cleanup levels." This ROD finalizes the preliminary remediation levels (PRL) presented in the FS and PP and so the previously established PRLs now become cleanup levels. In addition, the acronym "PRLs" is used other times in Section 10. Section 10 should be checked and the acronym "PRLs" should be replaced with the term "cleanup levels," as appropriate.

Response: Agreed. The acronym "PRLs" will be replaced with "cleanup levels" in Section 10. The entire ROD will be reviewed for use of the term "PRL."

Action: The acronym "PRLs" has been replaced with "cleanup levels" in the following places:
Line 11 of page 10-2
Line 4 of page 10-4
Line 12 of page 10-4

The sentence on lines 13-15 of page 9-3 has been revised to read, "A multi-step process was followed to develop the Operable Unit 2 cleanup levels, which were called Preliminary Remediation Levels (PRLs) in the FS/PP."

Comment #: 7
Commenting Organization: U.S. EPA Commentor: Saric
Section #: 11 Page #: 11-1 Line #: NA Code:
Original Specific Comment: 4

Comment: Section 11 presents an explanation of any significant changes between the PP and the ROD. A full explanation of the rationale for changing the OU2 total uranium WAC from 1,080 to 1,030 ppm should be added to Section 11 (see General Comment I).

Response: See response to Comment No. 1 (EPA Original General Comment No. 1).

Action: See action to Comment No. 1.

Comment #: 8
Commenting Organization: U.S. EPA Commentor: Saric
Section #: Appendix A Page #: NA Line #: NA Code:
Original Specific Comment: 5

Comment: Appendix A presents ARARs and other criteria, guidance, or advisories to be considered (TBC) for the selected remedy. The cleanup level of 400 ppm or lead based on EPA's recent soil lead screening levels guidance is not presented in Appendix A. The cleanup level for lead in soil should be added as a chemical-specific TBC.

Response: Agreed. The TBC for the lead cleanup level will be added to Table A-1.

Action: The soil lead screening level of 400 ppm from the "Revised Interim Soil Lead Guidance for CERCLA Sites and RCRA Corrective Action Facilities" has been added to the end of Table A-1.

Comment #: 9
Commenting Organization: U.S. EPA Commentor: Saric
Section #: Resp. Summ. Page #: RS-3-12 Line #: 18-31 Code:
Original Specific Comment: 6

Comment: The text responds to a comment regarding the permanence of the on-site disposal facility. Commentors questioned whether on-site disposal could ever be considered to be permanent. Additional information should be added to the text to explain that, in accordance with the National Oil and Hazardous Substances Pollution Contingency Plan (NCP), permanence is measured on a scale, from remedial actions that require long-term maintenance on the lower end of the scale (that is, less permanent) to remedial actions that permanently destroy contaminants and require no long-term maintenance at the higher end of the scale. Providing a reference to the NCP and explaining the concept of permanence will strengthen the response.

Response: Agreed. The suggested text and reference will be directly incorporated into the response to explain the concept of permanence.

Action: The three sentences on lines 18-24 of page RS-3-13 have been revised to read as follows: "Long-term effectiveness and permanence is one of the nine criteria used to evaluate a proposed remedy. In accordance with the NCP, permanence is measured on a scale, from remedial actions that require long-term maintenance on the lower end of the scale (i.e., less permanent) to remedial actions that permanently destroy contaminants and require no long-term maintenance at the higher end of the scale. Use of the term "permanence" to describe the on-site disposal facility refers to the determination that, based on available technology, the preferred remedial alternative provides the most feasible and permanent solution for the remediation of Operable Unit 2."

REGIONAL COUNSEL'S COMMENTS

Comment #: 10
Commenting Organization: U.S. EPA Commentor: Saric
Section #: Page #: Line #: Code:
Original Comment: 1

Comment: The draft ROD suggests that the United States Environmental Protection Agency's (U.S. EPA) concurrence with a Comprehensive Environmental Response, Compensation and Liability Act (CERCLA), 42 U.S.C. §§ 9601-9675, waiver of the Ohio siting criteria will be contained in some other independent document. However, pursuant to 40 C.F.R. § 300.430 (f) (5) (ii) (C), the ROD must describe, among other things:

> The applicable or relevant and appropriate requirements of other federal and state laws that the remedy will not meet, the waiver invoked, and the justification for invoking the waiver.

Therefore, all justification for the waiver must be included in the ROD and U.S. EPA's signing the ROD would constitute U.S. EPA's concurrence with the waiver. Throughout, the draft ROD must be revised to reflect that this document, and not some anticipated document, constitutes the CERCLA waiver.

While it is true, as the United States Department of Energy (U.S. DOE) states on page 8-10, that the responsiveness summary is a part of the ROD, U.S. EPA believes certain other parts of the draft ROD should also be clarified. In order to obtain U.S. EPA concurrence for the proposed waiver, U.S. DOE must make the following revisions to the draft ROD:

a. Page 9-1, Line 11: Because of the nature of the remedial wastes that will remain on-site, U.S. EPA considers continued federal ownership of the FEMP to be a key element of the proposed remedial action. Any proposal to transfer ownership to a non-federal entity would be a significant change from the selected remedy and could not be consummated prior to completion of the ROD amendment procedures of 40 C.F.R. § 300.435 (c)(2)(ii), including public notice and comment. Amendment of the ROD could only take place upon a demonstration that the requirements of Section 120(h) of CERCLA, 42 U.S.C. § 9620(h), have been satisfied and that such transfer will in no way undermine the integrity of any remedy selected for this Site. U.S. DOE must revise the ROD to explicitly acknowledge these restrictions.

b. Page 9-2, Line 33: Insert an explanation that cost estimates are derived based upon conservative estimates of the volume of on-site remedial wastes only. During implementation, the disposal unit will be constructed in phases and carefully sized to accommodate only that volume of on-site remedial wastes actually generated. As a result, the actual size and cost of the disposal unit may be smaller and lower than estimated and there will be no excess disposal capacity for any other wastes, including off-site wastes. Creation of any excess capacity would, among other things, not be cost effective as is required by Section 121 of CERCLA, 42 U.S.C. § 9621.

c. Page 10-5, Line 17: Insert an explanation that Section 3734.02(G) of the Ohio Revised Code allows the Director of the Ohio Environmental Protection Agency (OEPA) to grant an exemption to the siting criteria and that OEPA has issued guidance on such exemptions. OEPA maintains that its guidance allows exemptions to the siting criteria only in cases of certain geological conditions and that engineering controls cannot be used to supplement those conditions. Because the FEMP does not meet those geological conditions, U.S. EPA and U.S. DOE considered the waiver authority of Section 121(d)(4)(D) of CERCLA, 42 U.S.C. § 9621(d)(4)(D), and determined, as explained in the following narrative, that the geological conditions at the FEMP, if supplemented by proven and reliable engineering controls, would attain a level of performance at least equivalent to that required by the State exemption guidance. Therefore, the selected remedy invokes the CERCLA waiver authority with respect to the State siting requirements.

d. Page 10-5, Line 22: Add a sentence stating that the NCP explains that the purpose of this waiver is to allow for the use of alternative but equivalent technologies and that comparison based on risk is only permitted where the original standard is risk-based. The State exemption guidance, with its focus on existing geological conditions, is for the most part analogous to a technology standard but also appears to be, with respect to level of performance, risk and

technology based. Therefore, the following analysis of each of the CERCLA waiver criteria compares performance of the selected remedy with the State exemption guidance requirements in technological terms. Also included, for level of performance only, is a risk based analysis.

U.S. EPA realizes that some of this information is contained elsewhere in the ROD (e.g., page 7-13) but believes it is necessary to comprehensively address this issue within Section 10.

e. Page 10-8, Line 35: Replace "[n]ot applicable to this circumstance" with a statement that construction of the enhanced disposal unit would not take significantly longer than the time required for a disposal unit which merely meets the State's solid waste disposal unit requirements.

f. Page 10-8, Line 39: Add an explanation that this waiver applies only to on-site remedial wastes and in no way to any other wastes. Because the CERCLA exemption (see 40 C.F.R. § 300.400(e)) from Federal, State, and local permit requirements applies only to on-site remedial waste, treatment, storage, or disposal of any off-site waste at the FEMP would be an activity subject to Federal, State, and local permitting requirements. Such requirements generally include public notice and comment procedures.

Response:

a. DOE agrees that federal ownership is a key component of the selected remedy. Therefore, any decision to transfer ownership to a non-federal entity would be a significant change fundamentally altering the basic features of the selected remedy resulting in amendment of the ROD.

b. Agreed. Text will be inserted to explain that cost estimates were based on conservative volume estimates and that the disposal facility will be constructed in phases to accommodate only that waste which is generated.

c. Agreed. A discussion about the ORC exemption criteria, the fact that the FEMP does not meet these criteria, and invoking the waiver based on attaining an equivalent standard of performance will be added to line 17 of page 10-5. This additional discussion will be similar to that on page 7-11 and 7-12 of the ROD.

d. Agreed. The basis for a risk-based comparison will be clarified on line 25 of page 10-5.

e. Agreed. The statement "not applicable to this circumstance" will be replaced with language that clarifies that the time required for results is essentially equivalent.

f. Agreed. An explanation will be added to line 39 of page 10-8 that the waiver applies only to Operable Unit 2 remediation wastes.

Action:

a. The text on lines 26-28, page 9-2, "If at any . . . required by CERCLA." has been deleted, and the following statement has been added: "Continued federal ownership of the FEMP is also a key component of the selected remedy."

The following text was added before line 31 of page RS-3-28: "Continued federal ownership of the FEMP site is a key component of the selected remedy; however,..."

The sentence on lines 11-13 of page RS-3-33 has been revised to read: "The preferred remedial alternative for Operable Unit 2 requires continued federal ownership of the FEMP site with institutional controls (such as fencing and monitoring)." The sentence on lines 23-23 has been deleted.

The text on line 17 of page RS-3-33, has been revised to read: "Should the future use(s) of the FEMP site change from federal ownership with institutional controls, the Operable Unit 2 alternative would be re-evaluated to ensure protection for the designated use. Note that any decision to transfer ownership to a non-federal entity would be a significant change fundamentally altering the basic features of the selected remedy, resulting in an amendment of the ROD."

b. The following text has been added to line 43 of page 9-2: "These cost estimates are based on conservative estimates of waste volume. The on-site disposal facility will be constructed in phases to accommodate only that waste which is generated."

c. The following text has been inserted in line 17 of page 10-5: "OEPA has established two specific policies (GD202.101 and GD202.102) that identify conditions that would be acceptable to allow an exemption to the two siting criteria. While these policies state that several factors will be considered in evaluating an exemption, the specific factors identified indicate that the protection of human health and the environment should be provided solely by the existing hydrogeologic conditions. This has been reaffirmed by OEPA in several meetings.

The primary hydrogeologic standards established by these policies are:

- Significant thickness of low permeable material between the disposal facility and the aquifer
- Lack of inter-connection between the sole-source aquifer and any significant zones of saturation
- Significant amount of sediment [soil] between the disposal facility and the high-yield aquifer to prevent leachate from migrating to the high-yield aquifer during the life of the landfill and the post-closure care period. The post-closure care period for a solid waste landfill is a minimum of 30 years [OAC 3745-17-14(A)].

It has been determined, based on existing hydrogeologic information, that the existing hydrogeologic conditions at the FEMP do no fully meet these conditions. This is based on the possibility that some granular soils are interbedded in the till and the need to protect the aquifer for significantly longer than 30 years (at least for 200 years; an ARAR under 40 CFR 192)."

d. The sentence on lines 9-10 of page 10-5a has been replace by the following text: "The preamble to the NCP states that the purpose of this waiver is for the use of alternative but equivalent technologies and comparison based on risk is only

permitted where the original standard is risk-based. The Ohio exemption guidance, with its focus on geological conditions, is for the most part analogous to a technology standard but also appears to be, with respect to level of performance, risk and technology based. Therefore the following analysis of the CERCLA waiver criteria uses a technology-based comparison, except for level of performance, which is a risk-based comparison."

e. Line 35 on page 10-8 will be replaced with the following text: "Construction of a disposal facility with additional engineering controls will not take significantly longer than the time required for a disposal facility which strictly meets the Ohio Solid Waste Disposal Regulations."

f. The following text has been added to line 41 of page 10-8: "This waiver is applicable only to Operable Unit 2 on-site remediation wastes. If on-site disposal is chosen as the selected remedy for other FEMP operable units, separate waivers from this Ohio requirement would be necessary."

Comment #: 11
Commenting Organization: U.S. EPA Commentor: Saric
Section #: Page #: 5-1 Line #: 21 Code:
Original Comment: 2
Comment: To assist the reader, U.S. EPA suggests moving the explanation in Section 6.1.1. concerning how constituents of concern are determined to this page or at least here cross-referencing Section 6.1.1.

Response: Agreed. A reference to Section 6.1.1 will be added to Section 5.1.

Action: The following text has been inserted on line 23 of page 5-1: "COCs were determined in the Operable Unit 2 Baseline Risk Assessment. The process of determining COCs is explained in Section 6.1.1 of this document and Table 6-1 provides a complete listing of COCs for Operable Unit 2."

Comment #: 12
Commenting Organization: U.S. EPA Commentor: Saric
Section #: Resp. Summ. Page #: RS-3-13 Line #: NA Code:
Original Comment: 3
Comment: Comment a: U.S. EPA agrees with the apparent U.S. DOE conclusion that a two mile buffer zone is not necessary for protection of human health and the environment. However, the U.S. DOE response does not address the commentor's request.

Response: Agreed. Text will be included to address the commentor's concern that there "is no minimum two-mile safety buffer zone between the proposed storage site and the FEMP boundary." The new text will emphasize that the reason for the buffer zone around the disposal facility is not to provide a "safe" distance in regard to risk/exposure, but rather to allow for adequate easement of operations, maintenance, and monitoring of the facility.

Action: The phrase "at least 2 miles" on line 5 of page RS-3-13 has been revised to read, "...a minimum two-mile "safety" buffer zone."

The sentence on lines 9-11 of page RS-3-13 has been revised to read as follows: "The disposal facility cap reduces direct exposure to below detectable quantities at the surface, thus not posing a risk to human health or the environment, therefore a distance farther away (e.g., two-mile buffer zone) would not provide any additional margin of safety. The buffer zone around the disposal facility is not to provide a "safe" distance in regard to risk/exposure, but rather to allow adequate easement for operations, maintenance, and monitoring of the facility; hence, a two-mile buffer zone is not necessary and will not be implemented."

Comment #: 13
Commenting Organization: U.S. EPA Commentor: Saric
Section #: Resp. Summ. Page #: RS-3-36 Line #: NA-31 Code:
Original Comment: 4

Comment: Response c: U.S. EPA wants to expand upon the U.S. DOE response to this comment by saying that the primary enforcement vehicle of the ROD is the 1991 Amended Consent Agreement which requires U.S. DOE to implement, subject to U.S. EPA approval, remedial design and remedial action (RD/RA). The 1991 Amended Consent Agreement includes provisions for stipulated penalties in the event of U.S. DOE non-compliance with RD/RA requirements. Non-compliance would include failure by U.S. DOE to implement the remedy selected in the ROD. In addition, Section 310(a) (1) of CERCLA, 42 U.S.C. § 9659 (a)(1), affords persons the right, under certain circumstances, to take civil action to enforce the terms of the 1991 Amended Consent Agreement.

Response: Agreed. The response will be modified to include discussion of the requirements of the Amended Consent Agreement and the public's right to bring a civil suit if the ROD is not implemented.

Action: The following has been added to line 7 of page RS-3-36a: "In response to concerns regarding full implementation of the ROD, the primary enforcement vehicle of the ROD is the 1991 Amended Consent Agreement which requires DOE to implement, subject to EPA approval, remedial design (RD) and remedial action (RA). The 1992 Amended Consent Agreement includes provisions for stipulated penalties in the event of DOE non-compliance with RD and RA requirements. Non-compliance would include failure by DOE to implement the remedy selected in the ROD. In addition, Section 310(a)(1) of CERCLA [42 U.S.C. §9659(a)(1)] affords persons the right, under certain circumstances, to take civil action to enforce the terms of the 1991 Amended Consent Agreement."

RESPONSE TO OEPA COMMENTS ON THE PROPOSED DRAFT RECORD OF DECISION FOR OPERABLE UNIT 2

GENERAL COMMENTS

Comment #: 14
Commenting Organization: Ohio EPA Commentor: OFFO
Section #: N/A Page #: N/A Line #: N/A Code: M
Original General Comment: 1

Comment: Ohio EPA is not satisfied with the language of the ROD and specifically the Declaration section concerning receipt of off-site waste. Ohio EPA believes DOE must clearly commit within the ROD to not accepting and not attempting to ship any off-site waste for disposal at the Fernald site. Clearly, Ohio EPA will exercise its legal authority to prevent receipt of off-site waste for storage or disposal as is suggested in the ROD. Yet, we believe it is necessary for DOE to commit to not attempting to ship waste to Fernald for disposal. It is unacceptable to just suggest the EPA's will prevent off-site waste being disposed at Fernald, there must be a commitment by DOE to not attempt off-site waste disposal at Fernald. Ohio EPA does not believe a waiver is justified unless such a commitment can be made by DOE.

Response: DOE commits to not disposing any off-site waste in this on-site disposal facility.

Action: The following text has been added to line 47 of page D-1: "DOE will not dispose of any off-site waste in this on-site disposal facility."

The word "Therefore" has been deleted from line 5 of page 9-2a.

The word "location" has been replaced with "configuration" and the word "Fernald" has been replaced with "FEMP" on line 6 of page 9-2a.

The following text has been added to line 7 of page 9-2a: "...to accommodate other FEMP operable unit remediation wastes (that meet the established waste acceptance criteria). DOE will not dispose of any off-site waste in this on-site disposal facility."

Lines 16-18 of page RS-3-17 have been revised to read, "The disposal of any off-site waste in this on-site disposal facility will not occur."

Comment #: 15
Commenting Organization: Ohio EPA Commentor: OFFO
Section #: N/A Page #: N/A Line #: N/A Code: M
Original General Comment: 2

Comment: It should be noted by DOE that Ohio EPA's support for the OU2 wastes CERCLA waiver is not just based upon a protective cell design but upon a site-wide remediation plan that is protective of human health and the environment across the site. Specifically, Ohio EPA will only support the waiver in that the site-wide remediation is protective of the Great Miami Aquifer to the proposed MCL for total uranium of 20 μg/l. Ohio EPA's position regarding the CERCLA waiver is based upon remediation of the site under the "balanced approach." We support the waiver based upon a holistic approach to site remediation and believe that all aspects of the site cleanup are intrinsically tied to our acceptance of the waiver.

Response: Operable Unit 2 cleanup levels and waste acceptance criteria are based on protecting the aquifer to the proposed uranium MCL of 20 μg/L. The ROD states this in footnote "f" of Table 9-1, on lines 1-2 of page 10-3, and in Table 10-1. Although there has been discussion of using a newly promulgated standard (40 CFR 192) in place of the proposed MCL, this ROD has not incorporated that change. If at a later date the basis for groundwater protection at the site is changed, the Operable Unit 2 ROD would have to modified at that time.

Action: No action.

Comment #: 16
Commenting Organization: Ohio EPA Commentor: OFFO
Section #: N/A Page #: N/A Line #: N/A Code: M
Original General Comment: 3

Comment: In order for Ohio EPA to support the CERCLA waiver for Operable Unit 2 wastes, DOE must commit within the OU2 ROD to continue to evaluate additional technologies which may provide additional protectiveness to the cell design and waste form. Specifically, Ohio EPA requests that DOE commit to performing two additional treatability studies during RD/RA. The two technologies (Brickmaker and Geochemical Barriers) are recent developments which may provide additional protectiveness and/or cost savings to the disposal facility construction. For example, the Brickmaker technology has the potential to reduce the overall size of the disposal facility as well as fugitive emissions--a goal of local residents, stakeholders and task force members. Ohio EPA believes these studies should be conducted at the earliest possible time in order to efficiently integrate the results into the facility design. Ohio EPA requests that DOE commit to providing a schedule for such treatability study work within the RD Workplan.

Response: As noted in the comment, the value of examining the geochemical barriers and brickmaking technologies stems from the potential for increased protectiveness of human health and the environment.

(1) Protectiveness. These technologies can potentially increase protectiveness by acting as additional factors of safety. It should be noted that the modeling that determined the waste acceptance criteria (WAC) had built-in factors of safety -- conservative leachability assumptions, conservative transport assumptions, the fact that the average concentrations are much lower than the WAC, ignoring the geosynthetics, ignoring the leachate collection system, and ignoring the leak detection system. The advantages of implementation of additional protectiveness measures can be demonstrated by estimating the effects of these measures on the fate and transport modeling and recalculating the disposal facility's WAC at higher levels. Since the current WAC are viewed as ceiling values, there appears to be no reason, based on protectiveness, to consider these alternate technologies.

(2) Cost Effectiveness. Geochemical barriers, either as a subgrade or liner system improvement, offer the potential for simple application and effective performance. While many questions exist as to actual implementation costs and long-term effectiveness, an engineering study could examine these topics.

Due to the capital costs for the brickmaker equipment, preprocessing requirements, and specialized placement requirements, the brickmaker technology may not result in sufficient volume reduction as compared to material compaction to balance its added costs. Hence, it is suggested that the brickmaker be analyzed in a two phased approach. The first phase would be a cost study. The second phase, an engineering study, would be implemented only if the cost study showed potential savings from use of the brickmaker.

DOE commits to the performance of engineering studies of the geochemical barrier and brickmaking technologies during the Remedial Design process. These studies would be completed in a phased approach to determine (1) the effectiveness of the two technologies, and (2) the need for additional studies. DOE would proceed with further studies only if it is determined that the technologies are cost effective and reduce contaminant toxicity, mobility, or volume.

Action: The following text has been added to page 8-7, line 19 and page RS-3-43, line 22: "Engineering studies will be performed on the geochemical barriers and brickmaking technologies during the Remedial Design process. These studies would be completed in a phased approach to determine (1) the effectiveness of the two technologies, and (2) the need for additional studies. DOE would proceed with further studies only if it is determined that the technologies are cost effective and reduce contaminant toxicity, mobility, or volume."

SPECIFIC COMMENTS

Comment #: 17
Commenting Organization: Ohio EPA Commentor: OFFO
Section #: Declaration Page #: D-1 Line #: 44 Code: C
Original Specific Comment: 4
Comment: During discussions regarding the OU5 FS, the fact that the 1,080 ppm WAC would be decreased to 1030 ppm arose. DOE should add language to address the possibility for lowering the WAC based upon any new calculations presented under OUs 3 or 5.

Response: See response to Comment No. 1 (EPA Original General Comment No. 1).

Action: See response to Comment No. 1.

Comment #: 18
Commenting Organization: Ohio EPA Commentor: OFFO
Section #: 2.2 Page #: 2.6 Line #: 22 Code: C
Original Specific Comment: 5
Comment: There has been some discussion regarding the appropriate number for the Seepage Control RA. Please review RA numbering sequence to ensure proper number is being used.

Response: It has been determined that the appropriate number for the Seepage Control Removal Action is No. 30. This issue has been addressed in the comment/response package for the Removal Action Work Plan.

Action: Reference to "Removal Action No. 31" on Line 22 of page 2-6 has been replaced with "Removal Action No. 30."

Comment #: 19
Commenting Organization: Ohio EPA Commentor: OFFO
Section #: 3.0 Page #: 3-2 Line #: 10-12 Code: C
Original Specific Comment: 6

Comment: Ohio EPA held an availability session for members of the public to discuss the Operable Unit 2 Proposed Plan on November 3, 1994. This session should be added to the text. It is unclear in the test who held the October 25, 1994 workshop.

Response: Agreed. Text identifying the November 3, 1994 OEPA availability session will be added. Additionally, text will be included to clarify that DOE sponsored the October 25, 1994 public workshop.

Action: The following text was inserted on line 17 of page 3-2 and the end of line 17 of page RS-2-2: "On November 3, 1994, OEPA held an availability session for members of the public to discuss the Operable Unit 2 Proposed Plan."

The sentence on lines 10-12 of page 3-2 and on lines 11-12 of page RS-2-2 were revised to read: "On October 25, 1994, DOE held a public workshop to discuss any comments and concerns of implementing an on-site disposal facility."

Comment #: 20
Commenting Organization: Ohio EPA Commentor: OFFO
Section #: 3.0 Page #: 3-2 Line #: 26-33 Code: C
Original Specific Comment: 7

Comment: Additional text should be added to discuss the meetings held with locally elected officials during the course of the public comment period. Ohio EPA sponsored one such meeting of local township trustees on November 30, 1994 to discuss the OU2 Proposed Plan and waiver.

Response: Agreed. Additional text will be included to discuss the December 19, 1994 meeting held with the Crosby Township Trustees and the January 5, 1995 meeting held with the Ross Township Trustees, both of which occurred during the course of the public comment period. In addition, the purpose of the November 30, 1994 meeting with local township trustees will be clarified.

Action: The following text was added to line 31 of page 3-2 and line 31 of page RS-2-2: "On December 19, 1994, DOE attended the monthly Crosby Township Trustee meeting to give a briefing on the Operable Unit 2 preferred remedial alternative."

The following text was added to line 3 of page 3-2a and line 3 of page RS-2-2a: "DOE met with the Ross Township Trustees on January 5, 1995 to again discuss the Operable Unit 2 preferred remedial alternative."

Lines 25-26 of page 3-2 and line 25-26 of page RS-2-2 have been revised to read, "...to discuss the Operable Unit 2 Proposed Plan and waiver on November 30, 1994."

Comment #: 21
Commenting Organization: Ohio EPA Commentor: OFFO
Section #: 3.0 Page #: 3-3 Line #: 7-21 Code: C
Original Specific Comment: 8

Comment: Please add text to this section stating that DOE will use all current employed methods for notifying stakeholders of ESDs or ROD amendments. Specifically, DOE should commit to at least holding a roundtable/workshop on any ESD and that local residents will be notified in writing concerning amendments or ESDs.

Response: Agreed. DOE will continue the same level of public involvement as is currently implemented in the event of an ESD or ROD amendment. This involvement would include notifying stakeholders and providing an opportunity to voice questions and concerns. A workshop would be offered if the modification is an "explanation of significant differences." In the case of a ROD amendment, a workshop could be provided if there was significant interest from the public in having both a formal public meeting and an informational workshop. This will be added to the discussion on ROD modification.

Action: The following text has been added to line 23 of page 3-3 and line 1 of page RS-3-36a: "In the event of a ROD modification, DOE will notify stakeholders and provide an opportunity to voice questions and concerns. A workshop would be offered if the modification is an "explanation of significant differences." In the case of a ROD amendment, a workshop could be provided if there was significant interest from the public in having both a formal public meeting and an informational workshop."

Comment #: 22
Commenting Organization: Ohio EPA Commentor: OFFO
Section #: 4.0 Page #: 4-1 Line #: 11 Code: C
Original Specific Comment: 9

Comment: Update the OU1 info to reflect EPA signature.

Response: Agreed. It will be noted that the OU1 ROD was signed on March 1, 1995.

Action: The following phrase has been added to line 11 on page 4-1: "(signed by EPA on March 1, 1995)."

Comment #: 23
Commenting Organization: Ohio EPA Commentor: OFFO
Section #: 5.0 Page #: 5-5 Line #: 31-32 Code: C
Original Specific Comment: 10

Comment: Ohio EPA believes the last sentence of this paragraph should be deleted. Organic constituents were detected within the active flyash pile. Additionally, the amount of rejected data resulting from matrix interferences significantly limits DOE's ability to draw such a conclusion.

Response: Agreed. The last sentence, which states that the RI field investigation could not confirm the hypothesis that organic compounds may have been sprayed on the Active Flyash Pile as dust suppressant, will be deleted.

Action: The sentence on lines 31-32 of page 5-5 has been deleted.

Comment #: 24
Commenting Organization: Ohio EPA Commentor: OFFO
Section #: 7.4 Page #: 7-6 Line #: 7 Code: C
Original Specific Comment: 11
Comment: Delete the word "clean" from this sentence. The remaining soils will be below the action level but will still be contaminated.

Response: Agreed. The word "clean" will be deleted from the discussions of the remaining soils for both Alternative 3 and Alternative 6.

Action: The word "clean" has been deleted from line 16 of page 7-4 and from line 7 of page 7-6.

Comment #: 25
Commenting Organization: Ohio EPA Commentor: OFFO
Section #: 7.4 Page #: 7-6 Line #: 29-31 Code: C
Original Specific Comment: 12
Comment: Land use restrictions should be placed upon the property deed to allow anyone reviewing the deed to be aware of such restrictions. All reference to selling or transferring to another party should be deleted as DOE has committed to continued federal ownership.

Response: Land use restrictions will be placed upon the property deed to allow any one reviewing the deed to be aware of such restrictions. This will be done after all FEMP RODs have been signed and the effect upon the land uses has been fully evaluated.

DOE agrees that federal ownership is a key component of the selected remedy. Therefore any decision to transfer ownership to a non-federal entity would be a significant change fundamentally altering the basic features of the selected remedy resulting in amendment of the ROD.

Action: No action will be taken at this time regarding deed restrictions.

The text on lines 12-14 of page 7-3, 24-26 of page 7-4, and 29-31 of page 7-6 have been deleted.

The text on lines 26-28, page 9-2, "If at any... required by CERCLA." has been deleted. The following statement has been added: Continued federal ownership of the FEMP is also a key component of the selected remedy."

Comment #: 26
Commenting Organization: Ohio EPA Commentor: OFFO
Section #: 8.14 Page #: 8-7 Line #: 19-22 Code: C
Original Specific Comment: 13
Comment: Add a discussion of the commitment to two additional treatability studies to this section.

Response: See response to Comment No. 16 (OEPA Original General Comment No. 3).

Action: See action to Comment No. 16.

Comment #: 27
Commenting Organization: Ohio EPA Commentor: OFFO
Section #: 8.1.9 Page #: 8-11 Line #: 1-7 Code: C
Original Specific Comment: 14

Comment: Discussions with local stakeholders suggest this paragraph does not appropriately summarize the trepidation with which they have agreed to the on-site disposal alternative. None of the stakeholders prefer on-site disposal but have accepted the necessity of the alternative. These same stakeholders suggested the Fernald Citizens Task Force resolution regarding on-site disposal accurately reflect their position. Ohio EPA believes it would be appropriate to incorporate the resolution within this section.

Response: DOE agrees and understands that no member of the public, including the Fernald Citizen's Task Force (FCTF), prefers contaminated materials from Fernald to be disposed of on the FEMP site. However, some stakeholders do understand the necessity of taking a balanced approach to cleanup.

DOE will revise the response to indicate this general consensus among stakeholders. In addition, DOE will include text expressing those stakeholders', as well as the FCTF, position.

Action: The following text was added at the beginning of line 2 of page 8-11: "No member of the local public, including the Fernald Citizens Task Force (FCTF), prefers contaminated materials from Fernald to be disposed of on the FEMP site."

The word "absolute" has been inserted between "expressed" and "non-acceptance" on line 4 of page 8-11.

As stated in the FCTF's recommendation, the following text was added in place of the sentence on lines 6-9 of page 8-11: "However, other stakeholders (including the FCTF) understand the necessity of taking a balanced approach to cleanup. Those stakeholders expressed a similar position, as paraphrased from the FCTF March 11, 1995 recommendation:

> It is necessary to take a balanced approach to cleanup because if the decision was made to send all Fernald waste and contaminated materials off site, Fernald would face the likelihood of reprisals from other states resulting in not being able to send any waste off site. By managing the Fernald materials fairly and effectively, DOE will be in a more equitable position to prevent a decision to send outside wastes to Fernald.
>
> In addition, as a result of current and foreseeable budget conditions, a decision to send waste off site would greatly delay cleanup and may prevent any progress at all. An on-site disposal facility is thus more viable under the current budget and political constraints. Hence, the on-site disposal facility is the quickest way to protect the aquifer and overall environment in the long-term, and any failure of the disposal facility would not present any immediate or significant threat to human health and the environment. Those stakeholders also recognize that any on-site disposal facility would be built for long-term performance using the best design, technology, and engineering controls available (including adequate buffer zone and continued federal ownership of any property containing the disposal facility), that it will be continually monitored, and that the federal government will have adequate procedures in place to identify and correct any failures to the disposal facility."

Comment #: 28
Commenting Organization: Ohio EPA Commentor: OFFO
Section #: 9.1 Page #: 9-1 Line #: 17-26 Code: C
Original Specific Comment: 15

Comment: Add an additional discussion of the fact that disposal cell design and location are subject to change based upon additional investigations and EPA approval.

Response: Line 38 of page 9-2 states that the disposal facility location is subject to review and approval during the remedial design phase. An additional statement will be added to emphasize that the design is also subject to review and approval during remedial design.

Action: The following sentence has been added to line 26 of page 9-1, "The design of the disposal facility is subject to review and approval during remedial design based on additional investigations and the design process."

Comment #: 29
Commenting Organization: Ohio EPA Commentor: OFFO
Section #: 9.1 Page #: 9-1 Line #: 27-31 Code: C
Original Specific Comment: 16

Comment: Add that all excavation activities will be conduct while incorporating the concept of ALARA with regard to worker and community protection.

Response: Agreed. All remedial activities will incorporate ALARA in their implementation. This will be clarified in the discussion of excavation on page 9-1.

Action: The following text has been added to the end of line 33 on page 9-1: "...and the concept of ALARA will be documented in the Remedial Action Work Plan and implemented during construction."

Comment #: 30
Commenting Organization: Ohio EPA Commentor: OFFO
Section #: 9.1 Page #: 9-2 Line #: 4-7 Code: C
Original Specific Comment: 17

Comment: Add sentence suggesting WAC may go down based upon additional data from other operable units.

Response: See response to Comment No. 1 (EPA Original General Comment No. 1).

Action: See action to Comment No. 1.

Comment #: 31
Commenting Organization: Ohio EPA Commentor: OFFO
Section #: 9.1 Page #: 9-2 Line #: 24-27 Code: C
Original Specific Comment: 18

Comment: As stated in a previous comment, all reference to transfer or selling of the property should be deleted. Addition of restrictions to the deed are still appropriate and should be added immediately.

Response: See response to Comment No. 25 (OEPA Original Specific Comment No. 12).

Action: See action to Comment No. 25.

Comment #: 32
Commenting Organization: Ohio EPA Commentor: OFFO
Section #: 9.1 Page #: 9-2 Line #: 30 Code: C
Original Specific Comment: 19
Comment: Add a bullet discussing monitoring activities to occur following closure/restoration. This bullet should include information on the 30-year post-closure monitoring and five-year reviews.

Response: Monitoring activities are currently discussed in the "Institutional controls" bullet on line 23 of page 9-2. This bullet will be revised to include a statement about monitoring continuing for at least 30 years after closure of the disposal facility. Information on the CERCLA five-year reviews will be added to the "Maintenance" bullet on line 28 of the same page.

Action: The following text has been added to the end of line 25 of page 9-2: "Monitoring will continue for at least 30 years following closure of the on-site disposal facility."

The following text has been added to line 33 of page 9-2: "Because this remedy will result in contaminants remaining on site in an engineered disposal facility, a review will be conducted no less often than every five years after the initiation of remedial action in accordance with CERCLA §121(c) to ensure that the remedy continues to provide adequate protection of human health and the environment This review will continue until determined that it is no longer needed to maintain protectiveness of the disposal facility."

Comment #: 33
Commenting Organization: Ohio EPA Commentor: OFFO
Section #: Table 9-1 Page #: 9-4&5 Line #: Code: C
Original Specific Comment: 20
Comment:
a) The table should be revised to include cleanup levels for all OU2 COCs including radionuclides, inorganics and organics.
b) South Field Th-230 revise footnote "j" to be "i."

Response:
a) Over 90 percent of the risk from Operable Unit 2 and over 99 percent of the volumes to be excavated are due to the radium, thorium, and uranium isotopes listed in Table 9-1 with the addition of lead and arsenic for certain subunits. These COCs and the associated cleanup levels have been identified as "primary cleanup levels." DOE believes that these "primary cleanup levels" at the subunits will be protective of human health and the environment. The remaining COCs identified in the Operable Unit 2 Baseline Risk Assessment did not significantly contribute to the risk from Operable Unit 2 or the estimated volumes to be excavated and are therefore designated as "secondary cleanup levels." The risk from the COCs for the secondary cleanup levels was close to the 10^{-6} point of departure and contributed a small percentage to the overall risk from Operable Unit 2. Based on existing analytical results from the RI and the volume calculations from the FS, secondary cleanup levels will most likely be achieved by remediation to the primary levels, however, will be confirmed through post-remediation sampling.

Table 9-1 will be renamed to "Operable Unit 2 Primary Soil Cleanup Levels for the Selected Alternative" and Table 9-2 will be created to list the secondary cleanup levels. Text explaining the primary and secondary cleanup levels will be added to Section 9.2.

b) Because an additional footnote has been added to the table, the footnote "i" is now footnote "j." Therefore the footnote for South Field thorium-230 will remain "j."

Action: a) The phrase "and are presented in Table 9-1" has been deleted from line 13 of page 9-3.

The following text has been added to line 21 of page 9-3: "The Operable Unit 2 cleanup levels have been divided into primary and secondary cleanup levels, which are presented in Table 9-1 and Table 9-2, respectively. The COCs for the primary cleanup levels contribute over 90 percent of the risk from Operable Unit 2 and over 99 percent of the volumes to be excavated under the selected alternative. The COCs for the secondary cleanup levels pose risks that are close to the 10^{-6} point of departure and contribute a small percentage to the overall risk from Operable Unit 2. Based on existing analytical results from the RI and the volume calculations from the FS, secondary cleanup levels will most likely be achieved by remediation to the primary levels, however, will be confirmed through post-remediation sampling."

The title to Table 9-1 has been changed to "Operable Unit 2 Primary Soil Cleanup Levels for the Selected Alternative." Table 9-2, "Operable Unit 2 Secondary Soil Cleanup Levels for the Selected Alternative" has been created and added to the end of Section 9.

b) No action.

Comment #: 34
Commenting Organization: Ohio EPA Commentor: OFFO
Section #: 10.2.2 Page #: 10-4 Line #: 3-4 Code: C
Original Specific Comment: 21

Comment: Recommend deletion of the following "would not be considered waste and". Ohio EPA would prefer the text remain silent on whether the residual contamination in the soils is waste.

Response: Agreed. The sentence will be changed to remove any reference to the material not being waste.

Action: The sentence on lines 3-4 of page 10-4 has been changed to read, "Material with contaminant levels that are below the cleanup levels will be left in place."

Comment #: 35
Commenting Organization: Ohio EPA Commentor: OFFO
Section #: 10.2.3 Page #: 10-6 Line #: 9-20 Code: C
Original Specific Comment: 22

Comment: DOE should add language that discusses the fact that post-closure monitoring will extend beyond the 30 years required, specifically through the CERCLA five year review process.

Response: It is not felt that information on post-closure monitoring and CERCLA five-year reviews is relevant to the degree of protection equivalency discussion for the waiver. This information has been added to Section 9.1 based on this comment and Comment No. 32.

Action: See action to Comment No. 32 (OEPA Original Specific Comment No. 19).

Comment #: 36
Commenting Organization: Ohio EPA Commentor: OFFO
Section #: 10.4 Page #: 10-9 Line #: Code: C
Original Specific Comment: 23

Comment: This section should include a discussion of the commitment to continue to evaluate new technologies during implementation. Specifically the section should address the two treatability studies previously requested.

Response: See response to Comment No. 16 (OEPA Original General Comment No. 3).

Action: See action to Comment No. 16.

Comment #: 37
Commenting Organization: Ohio EPA Commentor: OFFO
Section #: Appendix A Page #: Line #: Code:
Original Specific Comment: 24

Comment: Based upon a brief review, Ohio EPA noted ARARs which have been defined in previous documents have been left out of the OU2 draft ROD. DOE should review the final OU1 ROD as well as the draft OU5 FS and related Ohio EPA comments to ensure that all previously defined ARARs are incorporated into this document.

Response: Agreed. A review of OU1 and OU5 ARARs, and associated OEPA comments, will be completed and any ARARs which pertain to the OU2 selected alternative will be incorporated in the OU2 ROD. In addition, the most recent information on natural and cultural resources will be added to Table A-5.

Action: The following ARARs were added to Appendix A, Table A-1 (Chemical-Specific ARARs):

40 CFR 192.02 (c)(3)(B) - Groundwater Protection Standards
40 CFR 61.192 - NESHAPs for Radon Emissions from DOE Facilities
OSWER Directive 9355.4-12 - Screening Level for Lead in Soil

The following ARARs were added to Appendix A, Table A-4 (Other Action-Specific ARARs):

OAC 3745-17-02,-05 - Particulate Ambient Air Quality Standards
OAC 3745-17-07 (B)(4) - Control of Visible Particulate Emissions
42 U.S.C. 4901 - Noise Pollution Control

The following ARARs were added/updated in Appendix A, Table A-5 (Location-Specific ARARs):

40 CFR 6.302(h) and 50 CFR 17.21 - Endangered Species and Critical Habitat
50 CFR 402.12(a),(b) - Biological Assessment
16 U.S.C. 431 - Antiquity Preservation
25 U.S.C. 3001 - Protection of American Indian Grave Sites
42 U.S.C. 1996 - Protection of American Indian Religious Freedom
40 CFR 6.302(b) - Floodplain Management

Comment #: 38
Commenting Organization: Ohio EPA Commentor: OFFO
Section #: Table A-4 Page #: A-53 Line #: Code: C
Original Specific Comment: 25

Comment: As stated in Ohio EPA comments on the draft Proposed Plan, an additional action specific ARAR should be 40 CFR 60.670 Subpart OOO. This ARAR addresses standards for the use of a crusher.

Response: In response to the Ohio EPA comments on the draft Proposed Plan, the referenced standard was added to the chemical-specific requirements on page A-8 of the Record of Decision. It is agreed, however, that these requirements are more appropriate in the action-specific requirements. The standards for the use of a crusher will be moved to Table A-4. The Ohio Particulate Matter Standards (OAC 3745-17-11), which are currently listed in Table A-1, are also more appropriate for Table A-4 and therefore will also be moved.

Action: The standards from 40 CFR §60.672 and OAC 3745-17-11 have been moved to Table A-4.

Comment #: 39
Commenting Organization: Ohio EPA Commentor: OFFO
Section #: Table A-4 Page #: A-53 Line #: c Code: C
Original Specific Comment: 26

Comment: An additional action specific ARAR should be OAC 3745.31-05(A)(3) which requires all new source employ Best Available Technology (BAT) for minimizing air emissions.

Response: Agreed. The BAT requirement for minimizing air emissions will be added to Table A-4.

Action: OAC 3745-31-05 (A)(3) has been added to Table A-4.

RESPONSIVENESS SUMMARY

Comment #: 40
Commenting Organization: Ohio EPA Commentor: OFFO
Section #: 2.0 Page #: RS-2-2 Line #: 10-12 Code: C
Original Specific Comment: 27

Comment: Ohio EPA held an availability session for members of the public to discuss the Operable Unit 2 Proposed Plan on November 3, 1994. This session should be added to the text. It is unclear in the text who held the October 25, 1994 workshop.

Response: See response to Comment No. 19 (OEPA Original Specific Comment No. 6).

Action: See action to Comment No. 19.

Comment #: 41
Commenting Organization: Ohio EPA Commentor: OFFO
Section #: 2.0 Page #: RS-2-2 Line #: 26-33 Code: C
Original Specific Comment: 28

Comment: Additional text should be added to discuss the meetings held with locally elected officials during the course of the public comment period. Ohio EPA sponsored one such meeting of local township trustees on November 30, 1994 to discussed the OU2 Proposed Plan and waiver.

Response: See response to Comment No. 20 (OEPA Original Specific Comment No. 7).

Action: See action to Comment No. 20.

Comment #: 42
Commenting Organization: Ohio EPA Commentor: OFFO
Section #: 3.0 Page #: Table RS-3-2 Line #: Code: C
Original Specific Comment: 29

Comment: Based upon discussions with local stakeholders, it is evident that the table incorrectly identifies commentor Vicky Dastillung as a Harrison, OH resident. The correct identification would be as a Ross Township resident. This error suggests DOE should review the table for additional inaccuracies.

Response: Agreed. The table will be reviewed for accuracy and corrected, if necessary, to reflect the spelling and affiliations/place of residence listed in the original comments.

Action: The following changes have been made:
Commentor E now reads, "Lisa Crawford, Resident of Harrison, Ohio"
Commentor F now reads, "Vicky Dastillung, Resident of Ross Township"
Commentor G now reads, "Pamela Dunn, Resident of Harrison, Ohio"
Commentor H now reads, "Darryl Huff, Resident of Morgan Township"
Commentor J now reads, "Dr. William Kuhlmann, Resident of Harrison, Ohio" and issue "1f" has been added to the Issue Identification column
Commentor K now reads, "Paul Liebendorfer, Bureau of Federal Facilities, State of Nevada"
Commentor N now reads, "Dianne R. Nielson, Department of Environmental Quality, State of Utah"

Commentor O now reads, "Thomas A. Schneider, Ohio Environmental Protection Agency"
Commentor Q now reads, "H. Thomas & Carolyn A. Rasche, Residents of Ross, Ohio"
Commentor S now reads, "Richard Strimple"
Commentor V now reads, "Donald H. Thiem, Resident of Hamilton, Ohio"
Commentor Y now reads, "William L. Vasconi, Chair, Nevada Test Site Community Advisory Board"
Commentor AA now reads, "Tom Willsey, President, Ross Township Board of Trustees"

Comment #: 43
Commenting Organization: Ohio EPA Commentor: OFFO
Section #: 3.0 Page #: RS-3-14 Line #: 29-33 Code: C
Original Specific Comment: 30

Comment: DOE should add a discussion of the availability of USEPA Technical Assistance Grants (TAGs) and the public's ability to obtain such a grant for independent oversight activities.

Response: Agreed. Discussion will be added to the response regarding the public's ability to obtain USEPA TAGs which could be used to fund independent oversight activities.

Action: The following text has been added to the end of line 2 on page RS-3-15: "Additionally, EPA Technical Assistance Grants (TAGs) are made available to the public to fund activities such as independent oversight of disposal facility design, construction, and monitoring."

Comment #: 44
Commenting Organization: Ohio EPA Commentor: OFFO
Section #: 3.0 Page #: RS-3-17 Line #: 10-18 Code: C
Original Specific Comment: 31

Comment: As stated in previous comments, Ohio EPA believes simply responding that the state will prevent off-site waste is insufficient. DOE should commit to not attempting to bring off-site waste to Fernald for disposal or storage.

Response: See response to Comment No. 14 (OEPA Original General Comment No. 1).

Action: See action to Comment No. 14.

Comment #: 45
Commenting Organization: Ohio EPA Commentor: OFFO
Section #: 3.0 Page #: RS-3-19 Line #: 13-16 Code: C
Original Specific Comment: 32

Comment: As stated in Ohio EPA's and numerous others' comments on the proposed plan, a condition of support for the CERCLA waiver is that no characteristic hazardous waste be disposed of on-site. The last three sentences of this paragraph should be deleted.

Response: Agreed. The selected remedy for Operable Unit 2 includes sending the Firing Range waste off site for disposal. The last three sentences will be deleted.

Action: The three sentences on lines 10-16 of page RS-3-19 have been deleted.

Comment #: 46
Commenting Organization: Ohio EPA Commentor: OFFO
Section #: 3.0 Page #: RS-3-29 Line #: 15-22 Code: C
Original Specific Comment: 33

Comment: Additional text should be added to this discussion to expand the concept of 5 year reviews. DOE should briefly describe the content and intent of the review.

Response: The specific content of the 5-year reviews will be determined in the Remedial Action Work Plan and will be based on the specific design of the disposal facility and the monitoring system. It is expected that the 5-year reviews will include review of monitoring data, engineering controls, and maintenance activity. This will be added to the response. Also the intent of the 5-year reviews, to assure continued protection of human health and the environment, will be added. DOE believes that this discussion would be more appropriate in the response to Comment 5a (Long-Term Monitoring/ Maintenance). A reference to response 5a will be added to page RS-3-29.

Action: The following text has been added to line 17 of page RS-3-27: "Five-year reviews are conducted to assure continued protection of human health and the environment. The specific content of the reviews will be determined in the Remedial Action Work Plan, however it is expected to include review of monitoring data, engineering controls, and maintenance activity."

The following text has been added to line 18 of page RS-3-29: "...(see response 5a on page RS-3-27 for more information on CERCLA five-year reviews)."

Comment #: 47
Commenting Organization: Ohio EPA Commentor: OFFO
Section #: 3.0 Page #: RS-3-31 Line #: 27-30 Code: C
Original Specific Comment: 34

Comment: Additional justification should be provided for the $9,000,000 cost for monitoring off-site disposal alternatives. It is unclear to the reader the basis for these costs.

Response: Agreed. The monitoring costs for the off-site disposal alternative are due to monitoring that will be performed at the subunits where the waste was excavated. This will be clarified in the response.

Action: The following text has been added to line 23 of page RS-3-31: "Alternative 3 (Excavation and Off-Site Disposal) requires continued monitoring at the subunits where the waste was excavated while Alternative 6 (Excavation and On-Site Disposal with Off-Site Disposal of Fraction Exceeding Waste Acceptance Criteria) requires monitoring at both the subunits and at the on-site disposal facility."

Comment #: 48
Commenting Organization: Ohio EPA Commentor: OFFO
Section #: 3.0 Page #: RS-3-33 Line #: 10-25 Code: C
Original Specific Comment: 35

Comment: The two paragraphs are contradictory one stating the ROD requires federal ownership while the second suggests sale or transfer of the property. Ohio EPA and the local stakeholders have only been willing to support on-site disposal as long as federal ownership is maintained. The ROD must be reviewed to remove all references to sale or transfer of the property from federal ownership.

Response: See response to Comment No. 10a (EPA Regional Counsel Original Comment No. 1a).

Action: See action to Comment No. 10a.

Comment #: 49
Commenting Organization: Ohio EPA Commentor: OFFO
Section #: 3.0 Page #: RS-3-43 Line #: Code: C
Original Specific Comment: 36

Comment: Add text consistent with previous comments concerning the continued evaluation of new technologies and specifically the two requested treatability studies.

Response: See response to Comment No. 16 (OEPA Original General Comment No. 3).

Action: See action to Comment No. 16.

Table of Contents

TABLE OF CONTENTS

Table of Contents i
List of Tables iv
List of Figures v
List of Acronyms vi

Declaration D-1

Decision Summary

1.0 Site Name, Location, and Description 1-1
2.0 Site History and Enforcement Activities 2-1
2.1 History of Operable Unit 2 2-3
2.2 Operable Unit 2 CERCLA Actions 2-4
3.0 Highlights of Community Participation 3-1
4.0 Scope and Role of the Operable Unit 4-1
5.0 Summary of Site Characteristics 5-1
5.1 Summary of Nature and Extent of Contamination 5-1
5.2 Pathways of Contaminant Migration 5-6
6.0 Summary of Site Risks 6-1
6.1 Overview of the Baseline Risk Assessment 6-1
6.1.1 Identification of Contaminants of Concern 6-2
6.1.2 Exposure Assessment for the Baseline Risk Assessment 6-3
6.1.2.1 Current Land Use With Access Controls 6-3
6.1.2.2 Current Land Use Without Access Controls 6-3
6.1.2.3 Future Land Use With Federal Ownership 6-4
6.1.2.4 Future Land Use With Private Ownership 6-4
6.1.2.5 Exposure Point Concentrations 6-4
6.1.2.6 Exposure Assessment Parameters 6-10
6.1.3 Toxicity Assessment 6-10
6.1.4 Risk Characterization 6-22
6.2 Uncertainties 6-26
6.3 Baseline Ecological Risk Assessment 6-27
6.4 Conclusion 6-29

TABLE OF CONTENTS
(Continued)

7.0 Description of Remedial Alternatives 7-1
7.1 Alternative 1: No Action 7-1
7.2 Alternative 2: Consolidation and Capping 7-1
7.3 Alternative 3: Excavation and Off-Site Disposal 7-3
7.4 Alternative 6: Excavation and On-Site Disposal with Off-Site Disposal of Fraction Exceeding Waste Acceptance Criteria 7-5
7.5 Major ARARs for Operable Unit 2 7-9
7.5.1 No Action Alternative 7-10
7.5.2 Chemical-Specific ARARs/TBCs 7-10
7.5.3 Action-Specific ARARs/TBCs 7-10
7.5.4 Location-Specific ARARs/TBCs 7-11
8.0 Summary of the Comparative Analysis of Alternatives 8-1
8.1 Comparative Analysis of Alternatives 8-2
8.1.1 Overall Protection of Human Health and the Environment 8-2
8.1.2 Compliance with ARARs 8-4
8.1.3 Long-Term Effectiveness and Permanence 8-5
8.1.4 Reduction of Toxicity, Mobility, or Volume Through Treatment 8-7
8.1.5 Short-Term Effectiveness 8-7
8.1.6 Implementability 8-8
8.1.7 Cost 8-10
8.1.8 State Acceptance 8-10
8.1.9 Community Acceptance 8-11
9.0 Selected Remedy 9-1
9.1 Key Components 9-1
9.2 Cleanup Levels 9-3
10.0 Statutory Determinations 10-1
10.1 Protection of Human Health and the Environment 10-1
10.2 Compliance with ARARs 10-2
10.2.1 Chemical-Specific ARARs/TBCs 10-2
10.2.2 Action-Specific ARARs/TBCs 10-3
10.2.3 Location-Specific ARARs/TBCs 10-4

TABLE OF CONTENTS
(Continued)

10.3 Cost Effectiveness 10-9

10.4 Utilization of Permanent Solutions and Alternative Treatment Technologies or Resource Recovery Technologies to the Maximum Extent Practicable 10-9

10.5 Preference for Treatment as a Principal Element 10-10

10.6 Irreversible and Irretrievable Commitment of Resources 10-11

11.0 Documentation of Significant Changes 11-1

References

Appendix A

LIST OF TABLES

Table		Page
5-1	Operable Unit 2 Summary of Contaminant Concentrations	5-2
6-1	Operable Unit 2 Contaminants of Concern	6-6
6-2	Principal Exposure Parameters for Selected Operable Unit 2 Baseline Risk Assessment Receptors	6-11
6-3	Dermal Reference Doses and Cancer Slope Factors for Contaminants of Concern Chemical Carcinogens	6-14
6-4	Oral and Inhalation Cancer Slope Factors for Contaminants of Concern Radiological and Chemical Carcinogens	6-16
6-5	Contaminants of Concern Reference Doses for Noncarcinogenic Chemicals	6-20
6-6	Current Land Use Scenarios Carcinogenic Risk and Hazard Index	6-23
6-7	Future Land Use With Federal Ownership Scenario Carcinogenic Risk and Hazard Index	6-24
6-8	Future Land Use With Private Ownership Scenario Carcinogenic Risk and Hazard Index	6-25
8-1	Summary of Comparative Analysis of Remedial Alternatives Operable Unit 2	8-3
8-2	Summary of Long-Term and Short-Term Environmental Impacts	8-6
9-1	Summary of Operable Unit 2 Soil Cleanup Levels for the Selected Alternative	9-4
10-1	Compliance with Operable Unit 2 Chemical-Specific ARARs - Alternative 6	10-3

LIST OF FIGURES

Figure		Page
1-1	FEMP Facility Location Map	1-2
2-1	FEMP Site Map	2-5
6-1	General Conceptual Site Model/Operable Unit 2	6-5
7-1	Site Plan Potentially Acceptable Region for Operable Unit 2 On-Site Disposal	7-7
7-2	Typical Detail Composite Cap and Liner	7-8

ACRONYMS AND ABBREVIATIONS

ALARA	as low as reasonably achievable
ARAR	applicable or relevant and appropriate requirement
ATSDR	Agency for Toxic Substances and Disease Registry
AWWT	Advanced Wastewater Treatment
CERCLA	Comprehensive Environmental Response, Compensation, and Liability Act
CFR	Code of Federal Regulations
COC	contaminant of concern
CPC	constituent of potential concern
CT	central tendency
DOE	United States Department of Energy
~~DOT~~	~~United States Department of Transportation~~
EA	Environmental Assessment
ECAO	Environmental Criteria and Assessment Office
EPA	United States Environmental Protection Agency
FCTF	Fernald Citizens Task Force
FEMP	Fernald Environmental Management Project
FFCA	Federal Facility Compliance Agreement
FMPC	Feed Materials Production Center
FONSI	Finding of No Significant Impact
FS	Feasibility Study
FS/PP-EA	Feasibility Study/Proposed Plan - Environmental Assessment
HEAST	Health Effects Assessment Summary Tables
HI	hazard index
HQ	hazard quotient
ILCR	incremental lifetime cancer risk
IRIS	Integrated Risk Information System
LOAEL	lowest observed adverse effect level
MCL	maximum contaminant level
MCLG	maximum contaminant level goal
MUSLE	Modified Universal Soil Loss Equation
NCP	National Oil and Hazardous Substances Pollution Contingency Plan (commonly known as the National Contingency Plan)
NEPA	National Environmental Policy Act of 1970
NOAEL	no observed adverse effect level

O&M	operations and maintenance
OAC	Ohio Administrative Code
ODAST	one-dimensional analytical solute transport

OEPA	Ohio Environmental Protection Agency
~~OMB~~	~~Office of Management and Budget~~
ORC	Ohio Revised Code
~~OSHA~~	~~Occupational Safety and Health Act~~
PAH	polynuclear aromatic hydrocarbon
~~pCi~~	~~picoCurie~~
PEIC	Public Environmental Information Center
PRG	preliminary remediation goal
PRL	preliminary remediation level
~~RAO~~	~~remedial action objective~~
RCRA	Resource Conservation and Recovery Act
RfD	reference dose
RI	Remedial Investigation
RI/FS	Remedial Investigation/Feasibility Study
RME	reasonable maximum exposure
ROD	Record of Decision
RSE	removal site evaluation
SARA	Superfund Amendments and Reauthorization Act of 1986
S.R.	state route
SWIFT	Sandia Waste Isolation Flow and Transport
TBC	To Be Considered
UCL	upper confidence limit
U.S.C.	United States Code

UNITS OF MEASUREMENT

g	gram
kg	kilogram
L	liter
m^3	cubic meters
μg	microgram
mg	milligram
mrem	millirem
ppm	parts per million
pCi	picoCurie

Declaration

DECLARATION

SITE NAME AND LOCATION

U.S. Department of Energy (DOE)
Fernald Environmental Management Project (FEMP) - Operable Unit 2
Fernald, Hamilton County, Ohio

STATEMENT OF BASIS AND PURPOSE

This decision document presents the selected remedial action for Operable Unit 2 at the U.S. Department of Energy FEMP site in Fernald, Ohio. This remedial action was chosen in accordance with the Comprehensive Environmental Response, Compensation, and Liability Act (CERCLA), as amended by the Superfund Amendments and Reauthorization Act of 1986 (SARA), and to the extent practicable, the National Oil and Hazardous Substances Pollution Contingency Plan (NCP).

The decision presented herein for the remedial action is based on information available in the Administrative Record for Operable Unit 2 maintained in accordance with CERCLA. This Record was made available for public review and comment. This decision is also based on the issues raised at the public meeting held on November 8, 1994 and the comments received during the public comment period following the issuance of the Feasibility Study/Proposed Plan-Environmental Assessment (FS/PP-EA). In making this decision, DOE and the U.S. Environmental Protection Agency have considered all comments received during the public comment period on the FS/PP-EA.

The State of Ohio concurs with the selected remedy.

ASSESSMENT OF THE SITE

Actual or threatened releases of hazardous substances from Operable Unit 2, if not addressed by implementing the response action selected in this Record of Decision, may present a current or potential threat to public health, welfare, or the environment.

DESCRIPTION OF THE SELECTED REMEDY

Operable Unit 2 consists of the Solid Waste Landfill, the North and South Lime Sludge Ponds, the South Field, the Inactive and Active Flyash Piles, and berms, liners, and soils within the Operable Unit 2 boundaries. Soils outside the Operable Unit 2 boundaries and all groundwater will be remediated under the Operable Unit 5 Record of Decision.

Operable Unit 2 is the third of five operable units to begin remediation at the FEMP. Remedial actions for each operable unit will be coordinated to achieve overall risk reduction for the site.

The selected remedy for Operable Unit 2 includes excavation of all material with contaminants of concern above the established cleanup levels, material processing for size reduction and moisture control if required, on-site disposal in an engineered disposal facility with a composite cap and liner system, and off-site disposal of a small fraction of the excavated material that exceeds the waste
No. 1 acceptance criteria of the on-site disposal facility. A maximum waste acceptance criteria of ~~360~~ 346 picoCuries per gram (pCi/g) of uranium-238, or ~~1,080~~ 1,030 parts per million (ppm) total uranium, has been developed for the on-site disposal facility. It is estimated that 314,700 cubic yards of Operable Unit 2 material will meet the waste acceptance criteria and be disposed in the on-site
No. 14 disposal facility. DOE will not dispose of any off-site waste in this on-site disposal facility. It is estimated that up to 3,100 cubic yards of material will not meet the waste acceptance criteria for on-

site disposal. This is approximately one percent of the total amount of waste material that will be excavated. This material will be packaged and shipped to an off-site disposal facility. Soils

containing lead from the Firing Range (approximately 300 cubic yards) will also not be disposed of in the on-site disposal facility. This material will be treated before being sent off site for disposal.

The location of the on-site disposal facility is subject to review and approval by EPA during the remedial design phase. The geology of the disposal facility location, in combination with engineering controls, will be protective of human health and the environment, based on evaluation of a series of soil borings made in the proposed area.

This alternative will include continued federal ownership of the site with access restrictions (fencing) and groundwater monitoring as institutional controls at the on-site disposal facility and the subunits.

The principal threats posed by Operable Unit 2 are addressed by this alternative through the removal of the contamination sources and containment in an engineered disposal facility.

STATUTORY DETERMINATIONS

The selected remedy is protective of human health and the environment, complies with Federal and State requirements that are legally applicable or relevant and appropriate to the remedial action (or justifies a CERCLA waiver), and is cost effective. The selected remedy utilizes permanent solutions and alternative treatment technologies to the maximum extent practicable. An EPA waiver is required from Ohio Solid Waste Disposal Regulations to allow waste disposal over a high-yield sole-source aquifer. The waiver is granted pursuant to CERCLA §121(d)(4)(D) which allows a waiver of an ARAR if "the remedial action selected will attain a standard of performance that is equivalent to that required under the otherwise applicable standard, requirement, criteria, or limitation, through the use of another method or approach." The justification for this waiver ~~was provided in the Feasibility Study Report and Proposed Plan~~ is provided in the Decision summary of this Record of Decision and is supported by the Administrative Record for Operable Unit 2.

No. 4

Because this remedy will result in contaminants remaining on site in an engineered disposal facility, a review will be conducted no less often than every five years after the initiation of remedial action to ensure that the remedy continues to provide adequate protection of human health and the environment [CERCLA § 121(c)].

Regional Administrator U.S. Environmental Protection Agency, Region V	Date
Assistant Secretary for Environmental Restoration U.S. Department of Energy	Date

Decision Summary

1.0 SITE NAME, LOCATION, AND DESCRIPTION

The Fernald Environmental Management Project (FEMP) is located on a 1,050-acre site in a rural agricultural area about 18 miles northwest of downtown Cincinnati, Ohio. The site is near the villages of Fernald, New Baltimore, New Haven, Ross, and Shandon, Ohio, and located west and south of Ohio State Routes (S.R.) 128 and 126, respectively (see Figure 1-1). The street address of the FEMP is: 7400 Willey Road, Fernald, Ohio 45030.

The FEMP is a government-owned, contractor-operated federal facility that produced high-purity uranium metal products for the U.S. Department of Energy (DOE) and its predecessor agencies during the period 1951 to 1989. Thorium was also processed, but on a smaller scale, and is still stored on site. A portion of the thorium has been shipped off site for disposal. During production, the site was known as the Feed Materials Production Center (FMPC). Uranium processing operations at the FEMP were limited to a fenced, 136-acre tract known as the Production Area. The remaining FEMP site consists of waste storage and disposal areas and forest and pasture lands, a portion of which is leased for livestock grazing.

Most facilities and structures rest on a relatively flat plain about 580 feet above mean sea level. The elevation slopes slightly toward Paddys Run, a small intermittent stream on the west side of the site. Natural drainage at the FEMP generally flows from east to west, with the exception of the extreme northeast corner, which drains east toward the Great Miami River.

The western portion of the FEMP property lies within the north-south corridor of the 100- and 500-year floodplain of Paddys Run. On-site surface waters are confined to Paddys Run and its unnamed tributaries and total approximately 8.9 acres. Results from a site-wide wetlands delineation indicate a total of 35.9 acres of freshwater wetlands on the site. The Great Miami Aquifer is the principal aquifer within the FEMP study area and has been designated as a sole-source aquifer under the provisions of the Safe Drinking Water Act. The Great Miami Aquifer is the primary source of water for local residences and businesses. To protect public health, DOE provides bottled water for those whose private wells have been impacted by contamination of the Great Miami Aquifer from the FEMP.

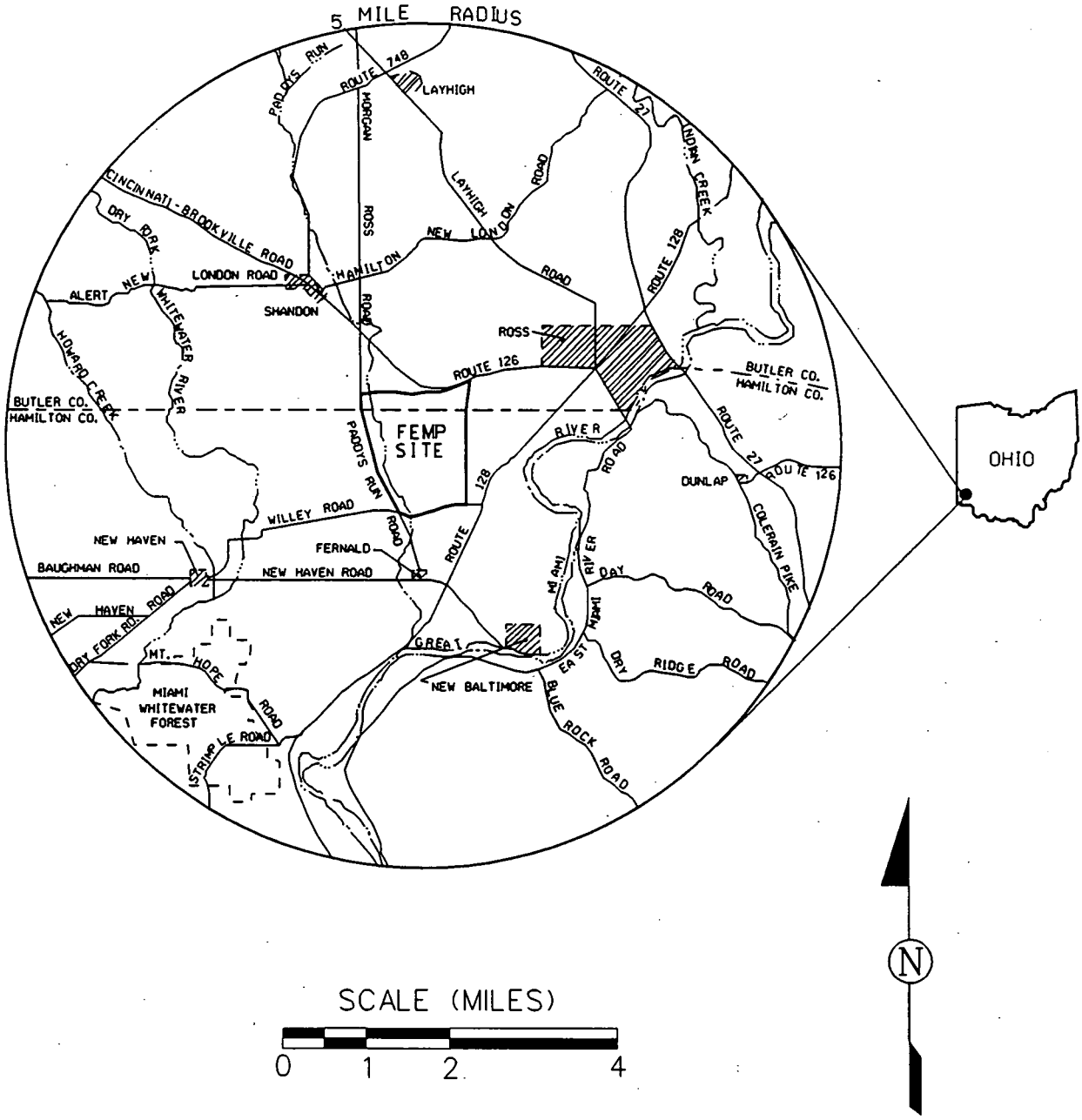

rod0101.dgn

000040

FIGURE 1-1
FEMP FACILITY LOCATION MAP

The land adjacent to the FEMP is primarily devoted to open land uses such as agriculture and recreation. There is some commercial activity adjacent to the site such as a panel truss company and several nursery suppliers. However, the majority of commercial activity is generally located in the village of Ross, approximately 2 miles northeast of the facility, and along S.R. 128 just south of Ross. Industrial usage is concentrated in the areas south of the FEMP, along Paddys Run Road, in Fernald, and in a small industrial park on S.R. 128 between Willey Road and New Haven Road. Open acreage on the FEMP is currently being leased for livestock grazing, but there are no areas within the FEMP boundaries considered to be prime farmland under the Farmland Protection Act of 1981.

Concentrations of residential units are situated northeast of the FEMP in Ross and southeast of the FEMP in a trailer park adjacent to the intersection of Willey Road and S.R. 128. Other residences are scattered around the area, generally in association with farmsteads. An estimated 23,000 residents live within a 5-mile radius of the FEMP.

2.0 SITE HISTORY AND ENFORCEMENT ACTIVITIES

The Fernald site was constructed in the early 1950s to produce high-grade uranium metal for use in plutonium production in government reactors at Richland, Washington, and Aiken, South Carolina. The FMPC was constructed on an accelerated schedule by the Atomic Energy Commission with the aid of the U.S. Army Corps of Engineers. The location was selected in 1950 and site preparation and construction began in May 1951. Operations began later in 1951 upon completion of the Pilot Plant, the site's first operational facility. Construction of the main facilities continued for three years and full-scale operation began in May 1954.

During production, large quantities of liquid and solid waste materials were generated. Prior to 1984, solid and slurried materials from uranium processing were stored or disposed of in the on-site Waste Storage Area. This area, located west of the former Production Area, includes six low-level radioactive waste storage pits; a burn pit; a clearwell; two earthen-bermed, concrete silos containing K-65 residues; one concrete silo containing cold metal oxides; and one unused concrete silo. Wastes from the non-process site operations were disposed of in the lime sludge ponds and a solid waste landfill (also located in the Waste Storage Area). Areas to the southwest of the former Production Area were used to dispose of earthen materials, construction rubble, boiler plant flyash and bottom ash, and other waste.

In March 1985, U.S. Environmental Protection Agency (EPA) issued a Notice of Noncompliance to DOE identifying potential environmental impacts associated with the FEMP's past and ongoing operations. Between April 1985 and July 1986, conferences were held between DOE and EPA representatives to discuss the major issues and to identify steps to achieve and maintain environmental compliance. Out of these meetings, a Federal Facility Compliance Agreement (FFCA) was jointly signed by DOE and EPA on July 18, 1986. A major component of this agreement was initiation of the Remedial Investigation/Feasibility Study (RI/FS). Additionally, in 1988, DOE entered into a Consent Decree with the State of Ohio that provided for the management of water pollution and hazardous wastes. This agreement was modified in 1993 by the Stipulated Amendment to the Consent Decree.

Production activities were stopped in 1989, and the production mission of the facility was formally ended in 1991. The FMPC was included on the National Priorities List in 1989. Subsequently, the

site was renamed the FEMP to reflect the change in mission. Cleanup of the FEMP is being conducted under the Comprehensive Environmental Response, Compensation, and Liability Act (CERCLA), as amended by the Superfund Amendments and Reauthorization Act of 1986 (SARA), and to the extent practicable, under 40 Code of Federal Regulations (CFR) Part 300, the National Oil and Hazardous Substances Pollution Contingency Plan (known as the National Contingency Plan, or NCP).

The RI/FS Work Plan (DOE 1988b) identified 39 site areas for investigation. To promote a more structured and expeditious cleanup of the FEMP, the 39 areas and related environmental issues were partitioned into five study areas called operable units. The division into operable units became a condition of the April 1990 Consent Agreement between EPA and DOE. This agreement was revised in September 1991 to address additional environmental issues and revise the CERCLA schedules. The revised Consent Agreement is referred to as the 1991 Amended Consent Agreement. The 1991 Amended Consent Agreement was modified on April 9, 1993 by an agreement between EPA and DOE resolving a dispute concerning EPA's denial of DOE's request for an extension of time to submit Operable Unit 2 documents. This modified agreement established new schedules extending the submittal dates of the Operable Unit 2 Remedial Investigation (RI) Report, Feasibility Study/Proposed Plan-Environmental Assessment (FS/PP-EA), and draft Record of Decision (ROD) and also accelerated the Operable Unit 1, Operable Unit 3, and Operable Unit 5 draft ROD submission dates by 30 days each. Separate RI/FS documentation and RODs are being issued for each of the five operable units at the FEMP. A description of the FEMP operable units is listed below:

<u>Operable Unit 1: Waste Pit Area</u>

- Waste Pits 1 through 6 and the liners and berms
- Clearwell
- Burn Pit
- Berms and liners within the operable unit boundary

<u>Operable Unit 2: Other Waste Units</u>

- Solid Waste Landfill
- North and South Lime Sludge Ponds
- Inactive Flyash Pile
- South Field
- Active Flyash Pile
- Berms, liners, and soils within the operable unit boundary

Operable Unit 3: Former Production Area

- Production area and production associated facilities and equipment
- All structures, equipment, utilities, tanks, and drums
- Scrap Metal Piles
- K-65 Transfer Line
- Effluent lines
- Wastes (solid waste, waste product, and thorium)
- Wastewater Treatment Facilities
- Fire Training Facility
- Feedstocks
- Coal pile

Operable Unit 4: Silos 1 through 4

- K-65 Silos (Silos 1 and 2)
- Metal oxide silo (Silo 3)
- Empty silo (Silo 4)
- Decant sump system and buried K-65 Transfer Trench
- Berms and soil within the operable unit boundary

Operable Unit 5: Environmental Media

- Soils not included in previous operable unit definitions
- Flora and fauna
- Surface water and sediments
- Groundwater

Following the issuance of the ROD for the last of the five operable units, the Amended Consent Agreement provides for a Comprehensive Site-Wide Operable Unit (Operable Unit 6). If needed, Operable Unit 6 will be created to perform a final assessment from a site-wide perspective to ensure that ongoing or planned remedial actions identified in the RODs for the five operable units will provide a comprehensive remedy for the FEMP site which is protective of human health and the environment. If it is determined that the remedial actions specified in the RODs for Operable Units 1 through 5 are not protective from a site-wide perspective, a Feasibility Study (FS) would be initiated. The ROD for the Comprehensive Site-Wide Operable Unit would be issued following the ROD for the last of the other five operable units.

2.1 HISTORY OF OPERABLE UNIT 2

As indicated above, Operable Unit 2 consists of five site areas and their associated berms, liners, and soils.

- The Solid Waste Landfill was reportedly used for the disposal of cafeteria waste, rubbish, and other types of waste from the nonprocess areas and on-site construction/demolition activities.

- The North and South Lime Sludge Ponds contain waste from the FEMP water treatment plant operations, coal pile storm water runoff, and boiler plant blowdown. The South Lime Sludge Pond is inactive and overgrown with grasses and shrubs, while the North Lime Sludge Pond is currently in use.

- The Inactive Flyash Pile was used for the disposal of ash from the boiler plant and other nonprocess wastes and building rubble such as concrete, gravel, asphalt, masonry, and steel rebar.

- The South Field was reportedly used as a burial site for FEMP nonprocess wastes such as flyash, on-site construction/demolition rubble, and soils that may have contained low levels of radioactivity. A slope at the southwest border of the South Field was used as the backstop for the FEMP security firing range for 35 years. Lead ammunition used during target practice was embedded in this slope.

- The Active Flyash Pile was the disposal area for flyash and bottom ash from the FEMP boiler plant.

The operational histories of the Lime Sludge Ponds and Active Flyash Pile are well understood, but the operational histories of the Solid Waste Landfill, Inactive Flyash Pile, and South Field are vague and not well documented. The location of each subunit is shown in Figure 2-1.

2.2 OPERABLE UNIT 2 CERCLA ACTIONS

Operable Unit 2 conducted two phases of a CERCLA remedial investigation. Field investigation activities conducted from 1988 through 1992 are referred to collectively as the Phase I Field Investigation. Additional field investigations carried out in 1993 are called the Phase II Field Investigation. Each phase encompassed all affected media (surface water, sediment, surface soil, subsurface soil, and groundwater) and collected samples from all five subunits in Operable Unit 2.

In addition to the field investigations conducted under CERCLA, a removal site evaluation (RSE) and several removal actions were conducted in the Operable Unit 2 areas. A RSE was performed to assess lead contamination in the South Field Firing Range and to determine whether the nature and extent of lead contamination warranted a removal action. In January and February 1992, vertical borings were completed in the western embankment of the South Field. It was determined from the sampling results that a removal action was not necessary for the lead contamination in the South Field Firing Range.

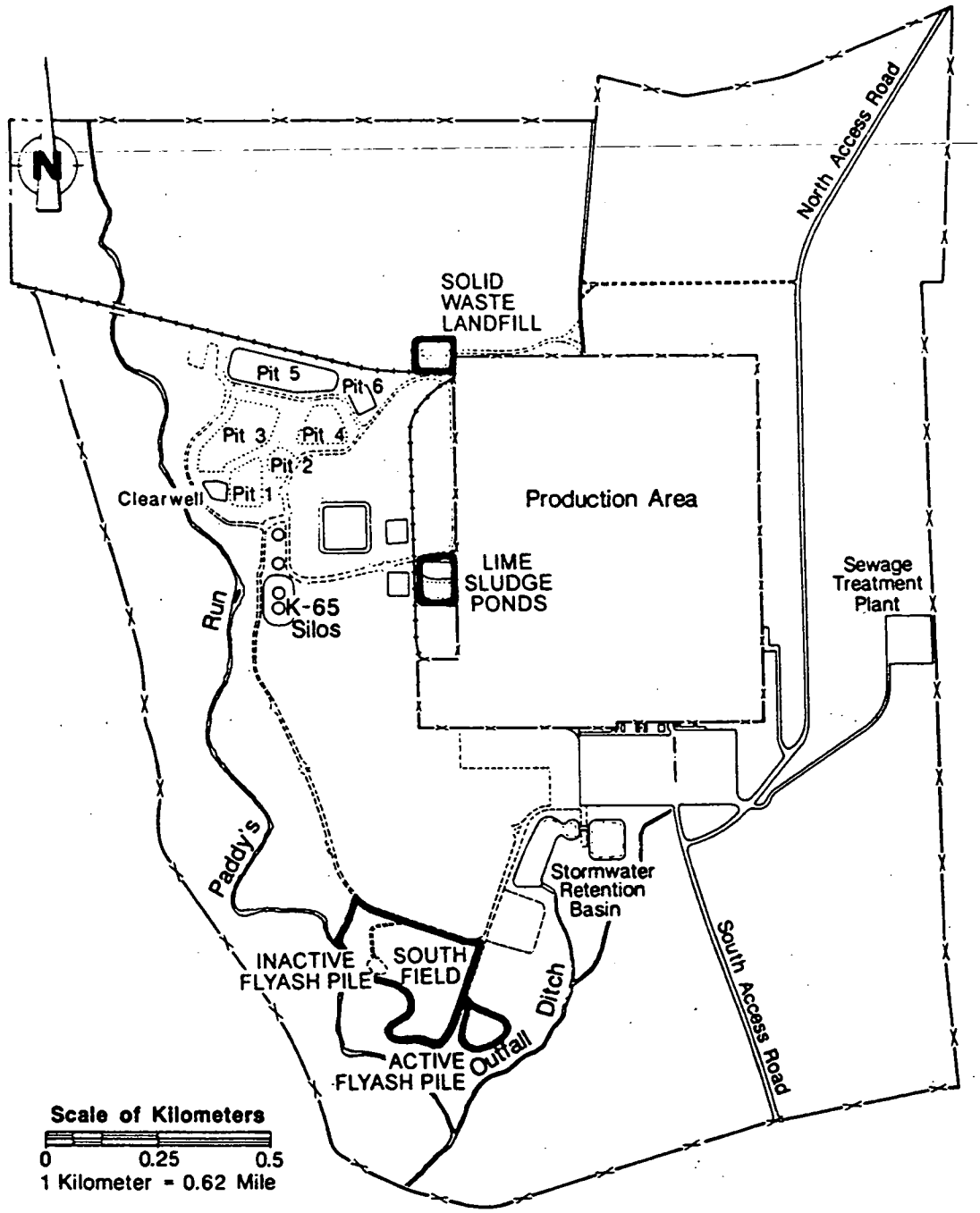

LEGEND

- Location of Operable Unit 2 Subunits
- Covered Pit
- Fence
- Railroad Spur
- Roadway

Figure 2-1: FEMP Site Map

GRAPHICS #2617

The Inactive Flyash Pile/South Field Disposal Area Control Removal Action (Removal Action No. 8) consisted of the installation of ropes, fences, and warning signs around the perimeter of these waste areas to control access. Phase I of the activities, which included fencing and roping the areas to be controlled, was completed in December 1991. Phase II, which included a radiological survey of the area, was completed in June 1992.

The Active Flyash Pile Control Removal Action (Removal Action No. 10) was completed as a time-critical removal action to mitigate the wind and water erosion of the Active Flyash Pile. This was accomplished by regrading the pile, installing a silt trap and wind barrier, and applying a crusting agent to the surface of the pile. Implementation of this removal action was completed in June 1992. Periodic routine inspections of the Active Flyash Pile and necessary maintenance of the erosion control measures are ongoing.

The Paddys Run Erosion Control Removal Action (Removal Action No. 29) was implemented in Paddys Run to provide bank stabilization adjacent to the Inactive Flyash Pile. Continued erosion of the bank could have undermined the western slope of the Inactive Flyash Pile and resulted in a discharge of contamination into Paddys Run. The bank was protected by installing riprap stone to cover the exposed soil face adjacent to Paddys Run. This time-critical removal action was completed in September 1993. Periodic routine inspections of the riprap stone and necessary maintenance of the erosion control measures are ongoing.

The South Field and Inactive Flyash Pile Seepage Control Removal Action (Removal Action No. 30) is anticipated to be implemented ~~begin~~ in April 1995. This time-critical removal action will collect contaminated surface water that is currently seeping into drainage ditches and migrating directly to Paddys Run or to the Great Miami Aquifer. The Action Memorandum (Craig 1994) was issued in October 1994 and the Work Plan (DOE 1995b) was submitted to EPA and OEPA in January 1995.

3.0 HIGHLIGHTS OF COMMUNITY PARTICIPATION

DOE's formal community relations program for the Fernald site, which began in 1985, focused on opening the lines of communication with members of the public residing near the FEMP site. A variety of forums were used to provide information to the community, including a periodic newsletter, regular community meetings, and availability sessions. Other activities included site tours, open houses, a speakers bureau, community assessments, and the development of fact sheets. Several reading rooms, which were later consolidated into one facility located near the FEMP site, were opened to house information about all aspects of the Remedial Investigation/Feasibility Study (RI/FS) process. In 1990, DOE established an Administrative Record for the site. The local Administrative Record is located at the Public Environmental Information Center (PEIC) at 10845 Hamilton-Cleves Highway, Harrison, Ohio 45030; a copy of the Administrative Record is also maintained at the offices of EPA Region V in Chicago, Illinois.

In November 1993 DOE implemented a public involvement program at the FEMP site which aimed at involving community members and other interested parties in decision making at the FEMP site. This public involvement program (which operates today) consists of three elements: (1) public information activities, (2) management involvement, and (3) person-to-person communication. As a result of this public involvement program and the community relations activities required under CERCLA, DOE provided the public with opportunities to comment on decisions relating to the remediation of Operable Unit 2.

The RI Report and the FS/PP-EA were made available to the public on February 18, 1994 and April 29, 1994, respectively. Notices of availability for inspection of both documents were published in May 1994 in the *Harrison Press*, the *Hamilton Journal*, and *The Cincinnati Enquirer*. A workshop was held on May 10, 1994 to present the results of the RI and to answer questions from the public. A general overview of the Operable Unit 2 subunits was provided, the nature and extent of contamination in the soils and groundwater were illustrated using solid block modeling, and the results of the Operable Unit 2 Baseline Risk Assessment were presented. Another public workshop was held on June 28, 1994 to discuss the FS/PP-EA that had recently been submitted to EPA and Ohio Environmental Protection Agency (OEPA). The purpose of this informational meeting was to discuss the alternatives considered for remediation of Operable Unit 2 and explain how the preferred

remedial alternative was identified. The workshop also emphasized ways the public could become involved in the decision-making process for Operable Unit 2.

On September 13, 1994, OEPA sponsored a public workshop on the possibility of establishing a disposal facility on the FEMP property as a component of remedial actions. The purpose of this meeting was to discuss the waiver from an applicable or relevant and appropriate requirements (ARAR) that was requested from EPA in the Operable Unit 2 FS/PP-EA to allow disposal of FEMP low-level remediation waste on FEMP property. This waiver was necessary because Ohio Solid Waste Disposal Regulations prohibit placement of a new solid waste disposal facility over a high-yield sole-source aquifer (see Section 7.5.4 for more information on the waiver). On October 25, 1994,
No. 19 ~~another~~ DOE held a public workshop ~~was held~~ to discuss any comments and concerns of implementing an on-site disposal facility.

Informational postcards were mailed reminding stakeholders of the October 25, 1994 workshop (discussed above), the upcoming public comment period, and the November 8, 1994 formal public meeting. A notice of availability announcing the opening of the formal public comment period
No. 19 (scheduled to end on November 25, 1994) for the FS/PP-EA was published on October 26, 1994. On November 3, 1994, OEPA held an availability session for members of the public to discuss the Operable Unit 2 Proposed Plan. A formal public meeting was then held on November 8, 1994. At this meeting, representatives from DOE, EPA, and OEPA answered questions about the preferred remedial alternative and other alternatives under consideration for Operable Unit 2. The first part of the meeting consisted of a brief presentation and the opportunity for questions and answers. The second part of the meeting was dedicated to receiving formal comments from the public on the Operable Unit 2 Proposed Plan. OEPA sponsored a second meeting with the elected officials of
No. 20 Ross, Crosby, and Morgan townships to discuss the Operable Unit 2 ~~preferred remedial alternative~~ Proposed Plan and waiver on November 30, 1994.

In response to a November 21, 1994 request from the public for more time to review the remedial alternatives, the comment period was extended to December 30, 1994. A notice appeared in the *Harrison Press*, *Hamilton Journal*, and *The Cincinnati Enquirer* announcing this extension in addition
No. 20 to the mailing of informational postcards. On December 19, 1994, DOE attended the monthly Crosby Township Trustee meeting to give a briefing on the Operable Unit 2 preferred remedial alternative. A second extension was granted pursuant to stakeholder request dated December 30,

1994 which extended the public comment period to January 20, 1995. A notice appeared in the *Hamilton Journal* and *The Cincinnati Enquirer* on January 6, 1995 notifying stakeholders of the
No. 20 second extension and informational postcards were again mailed. DOE met with the Ross Township Trustees on January 5, 1995 to again discuss the Operable Unit 2 preferred remedial alternative.

Responses to comments received during the public comment period and at the public meeting are included in the Responsiveness Summary, which is part of this ROD. This ROD presents the selected remedial action for Operable Unit 2 at the FEMP site in Fernald, Ohio, chosen in accordance with CERCLA (as amended by SARA) and, to the extent practicable, the NCP. The information that the Operable Unit 2 decision is based upon can be found in the Administrative Record. After signature of the ROD by EPA, if the remedial action differs significantly from the remedy selected in the ROD with respect to scope, performance, or cost, DOE would either:

1) Publish an explanation of significant differences (significant in this context is when a remedial action difference does not fundamentally alter the remedy selected in the ROD with respect to scope performance, or cost) which would be made available to the public in the Administrative Record (along with publication in a major local newspaper of general circulation); or

No. 3

2) Propose an amendment to the ROD (significant in this context is when a remedial action difference fundamentally alters the basic features of the selected remedy~~) with~~. To amend the ROD, DOE would issue a notice of availability and brief description of the proposed amendment in a major local newspaper of general circulation, make the proposed amendment to the ROD and information supporting the decision available for public comment, and provide a reasonable opportunity to comment, not less than 30 calendar days.

No. 21 In the event of a ROD modification, DOE will notify stakeholders and provide an opportunity to voice questions and concerns. A workshop would be offered if the modification is an "explanation of significant differences." In the case of a ROD amendment, a workshop could be provided if there was significant interest from the public in having both a formal public meeting and an informational workshop.

4.0 SCOPE AND ROLE OF THE OPERABLE UNIT

As discussed in Section 2.0, the Fernald site has been divided into five operable units to organize the evaluation and selection of appropriate remedial actions. The existing site strategy for cleanup is the remediation of each individual operable unit with coordination among the operable units with respect to treatment, disposition options, and land use. The proposed remedial action for Operable Unit 2 represents a significant portion of the remedial action for the site as a whole. The schedule for submittal of Draft RODs to the EPA for each operable unit is as follows:

- Operable Unit 4: June 10, 1994 (signed by EPA on December 7, 1994)
- No. 22 Operable Unit 1: November 6, 1994 (signed by EPA on March 1, 1995)
- Operable Unit 2: February 4, 1995
- Operable Unit 5: July 3, 1995
- Operable Unit 3: April 2, 1997

Remedial actions for each operable unit will be coordinated to achieve overall risk reduction for the FEMP. The final remedial actions for Operable Unit 2 will be coordinated with other remediation at the FEMP and will constitute the overall remediation of the FEMP when combined with the other operable unit remedial and removal actions. The removal actions that were taken by Operable Unit 2 are detailed in Section 2.2.

The primary focus of remedial action for Operable Unit 2 is the permanent disposition of the contaminated materials, including waste and soil, from each of the five subunits. The purpose of the remedial action is to prevent unacceptable current or future exposure to the contaminated materials of Operable Unit 2 and to mitigate the threat of continued release of hazardous substances into the environment.

It is DOE's policy to integrate the requirements of the National Environmental Policy Act of 1970 (NEPA) into the procedural and documentation requirements of CERCLA whenever practicable. It is not DOE's intent to make a determination concerning the applicability of NEPA to CERCLA activities. Consistent with DOE's Policy, the Operable Unit 2 FS/PP was written at the level of an Environmental Assessment (EA) thus it is a FS/PP-EA. However, pursuant to the Revised Secretarial Policy on NEPA, issued June 13, 1994, a Finding of No Significant Impact (FONSI) will not be prepared. It was decided that the term "EA" would remain on the document to avoid confusion among stakeholders.

5.0 SUMMARY OF SITE CHARACTERISTICS

Several investigative studies were conducted to determine the characteristics of the contamination sources and the nature and extent of contamination within Operable Unit 2. These investigations focused on the following areas and media:

- surface and subsurface materials within each of the subunit boundaries and immediately surrounding the subunits;
- surface water and sediment within each of the subunit boundaries; and
- perched groundwater and Great Miami Aquifer groundwater potentially impacted by Operable Unit 2.

5.1 SUMMARY OF NATURE AND EXTENT OF CONTAMINATION

The nature and extent of radiological and chemical constituents within Operable Unit 2 are based on data collected during Phase I and Phase II of the RI field investigation activities. Data generated prior to RI field activities, namely the Environmental Survey (DOE 1987 and 1988a) and the Characterization Investigation Study (Weston 1987), were used to define data objectives for the RI and for supplementary data. Additional information on the nature and extent of contamination in Operable Unit 2 is provided in Section 4.0 of the Operable Unit 2 RI Report.

Table 5-1 summarizes the detected concentrations of contaminants of concern (COCs) in each of the subunits. The dashes in the table indicate that the contaminant is not a COC for that media/subunit. No. 11 COCs were determined in the Operable Unit 2 Baseline Risk Assessment. The process of determining COCs is explained in Section 6.1.1 of this document and Table 6-1 provides a complete listing of COCs for Operable Unit 2. Table 5-1 includes all COCs for both the private ownership and federal ownership scenarios. Additional information on the development of COCs is provided in Section 6.0 of this document.

Solid Waste Landfill

Trenching and boring activities in the Solid Waste Landfill have determined that cafeteria, laboratory, construction/maintenance, and manufacturing wastes were disposed in the landfill. The depth of waste is generally 10 feet with a maximum depth of 15 feet in the southeastern corner of the landfill.

Twenty-three COCs have been identified for the Solid Waste Landfill. These COCs consist of 13 radionuclides, 4 metals, and 6 organic compounds. The extent of COCs in the Solid Waste Landfill

is distributed throughout the surface and subsurface fill materials with the maximum concentrations in the southeastern corner of the landfill. COCs were also detected in the glacial till beneath the landfill and in the perched groundwater near the southeast corner of the subunit. While uranium was detected

TABLE 5-1

OPERABLE UNIT 2 SUMMARY OF CONTAMINANT CONCENTRATIONS[a]

Contaminant of Concern (COC)	Solid Waste Landfill		Lime Sludge Ponds		Inactive Flyash Pile		South Field		Active Flyash Pile	
	min.	max.	min.	max.	min.	max.	min.	max.	min.	max.
SURFACE SOIL										
Cesium-137 (pCi/g)	-[b]	-	0.064	0.89	-	-	0.089	0.836	0.0721	0.919
Neptunium-237 (pCi/g)	0.0457	3.11	-	-	-	-	0.056	0.483	0.057	0.3
Plutonium-238 (pCi/g)	0.0191	0.9024	-	-	-	-	-	-	-	-
Radium-226 (pCi/g)	0.915	2.26	0.205	3.48	0.523	2.7	0.874	30.8	1.3	4.61
Radium-228 (pCi/g)	0.721	2.99	0.709	2.92	0.415	2.62	0.917	3.88	1.01	3.17
Strontium-90 (pCi/g)	0.527	1.44	-	-	-	-	0.16	1	-	-
Technetium-99 (pCi/g)	-	-	-	-	-	-	0.42	142	-	-
Thorium-228 (pCi/g)	0.482	2.33	0.082	2.91	0.79	2.71	0.658	4.41	0.805	3.81
Thorium-230 (pCi/g)	0.939	9.61	0.373	44.8	-	-	0.117	13.8	-	-
Thorium-232 (pCi/g)	0.601	2.5	0.037	2.75	0.841	2.33	0.19	3.99	0.931	3.74
Uranium-234 (pCi/g)	1.43	48.9	-	-	-	-	2.73	16.3	-	-
Uranium-235/236 (pCi/g)	0.0764	3.33	-	-	-	-	0.149	0.887	-	-
Uranium-238 (pCi/g)	2.34	63.8	0.856	84	-	-	2.87	16.6	-	-
Uranium-total (mg/kg)	-	-	2.45	244	-	-	1.86	50.6	-	-
Antimony[c] (mg/kg)	3.8	27.3	-	-	-	-	-	-	-	-
Arsenic (mg/kg)	4.4	8.3	-	-	1.9	33.2	4.6	9.3	10.4	14.5
Beryllium (mg/kg)	0.46	0.97	-	-	-	-	0.49	1.9	1.5	6.4
Lead[d] (mg/kg)	-	-	-	-	-	-	13.7	46	-	-
Aroclor-1254 (μg/kg)	-	-	-	-	-	-	89	89	-	-
Aroclor-1260 (μg/kg)	-	-	-	-	-	-	38	52	-	-
Benzo(a)anthracene (μg/kg)	55	880	-	-	-	-	44	5500	-	-
Benzo(a)pyrene (μg/kg)	59	760	-	-	-	-	51	9400	-	-
Benzo(b)fluoranthene (μg/kg)	64	710	-	-	-	-	46	6200	-	-
Benzo(k)fluoranthene (μg/kg)	-	-	-	-	-	-	49	7300	-	-

See footnotes at end of table

FER\CRU2\ROD\CME\TABLE5-1\April 4, 1995 11:02am

000055

6793

TABLE 5-1
(continued)

Contaminant of Concern (COC)	Solid Waste Landfill		Lime Sludge Ponds		Inactive Flyash Pile		South Field		Active Flyash Pile	
	min.	max.	min.	max.	min.	max.	min.	max.	min.	max.
SURFACE SOIL (continued)										
Dibenzo(a,h)anthracene (μg/kg)	56	200	-	-	2200	2200	43	1900	-	-
Dieldrin (μg/kg)	-	-	-	-	-	-	9.7	9.7	-	-
Indeno(1,2,3-cd)pyrene (μg/kg)	46	480	-	-	-	-	45	6000	-	-
SEDIMENT										
Radium-226 (pCi/g)	-	-	-	-	-	-	1.57	2.96	0.637	1.32
Uranium-total (mg/kg)	14.7	22.6	-	-	-	-	-	-	-	-
Arsenic (mg/kg)	-	-	-	-	-	-	-	-	10.9	10.9
GROUNDWATER (Great Miami Aquifer)										
Radium-226 (pCi/L)	-	-	-	-	-	-	-	-	0.264	1.19
Strontium-90 (pCi/L)	-	-	-	-	-	-	-	-	BDL[e,f]	BDL
Uranium-234 (pCi/L)	0.17	4.74	1.1	1.41	2.5	7.73	0.83	662	0.682	104
Uranium-235/236 (pCi/L)	0.05	0.277	0.076	0.16	0.15	0.698	0.22	31.7	0.666	4.7
Uranium-238 (pCi/L)	0.16	3.69	0.579	1.94	2.6	8.0	0.76	707	0.338	119
Uranium-total (μg/L)	0.378	9.15	1.63	4	5.62	29.4	1.67	2070	2.0	462
PERCHED GROUNDWATER										
Neptunium-237 (pCi/L)	-	-	0.149	0.339	-	-	-	-	-	-
Strontium-90 (pCi/L)	-	-	3.45	3.45	-	-	-	-	-	-
Technetium-99 (pCi/L)	BDL[f]	BDL	BDL[f]	BDL	-	-	-	-	-	-
Uranium-234 (pCi/L)	1.1	12	0.5	11.02	-	-	-	-	-	-
Uranium-235/236 (pCi/L)	0.208	0.432	0.076	0.7	-	-	-	-	-	-
Uranium-238 (pCi/L)	0.67	15.2	0.3	11.81	-	-	-	-	-	-
Uranium-total (μg/L)	2	55.8	1	58	-	-	-	-	-	-
Carbazole (μg/L)	BDL[f]	BDL	-	-	-	-	-	-	-	-

[a]Air and Great Miami River surface water COCs are not included in this table because no samples were taken; the COCs for these media were determined through fate and transport modeling.
[b]- = not a COC for that media/subunit
[c]Antimony is a subsurface soil COC for the Solid Waste Landfill based on the future homebuilder exposure scenario.
[d]Lead is a COC for the Firing Range only, not the entire South Field area.
[e]BDL = below detection limit
[f]Although this contaminant was not detected, it is a COC for perched groundwater or groundwater because fate and transport modeling predicted that the contaminant would migrate from the soil to the perched groundwater or Great Miami Aquifer in the future.

above background in the Great Miami Aquifer, the concentrations were similar in upgradient and downgradient wells indicating that there is not a significant impact on the Great Miami Aquifer from the Solid Waste Landfill. The number of COCs detected in the surface water, sediment, and perched groundwater are fewer than those detected in the surface and subsurface soils.

Lime Sludge Ponds

Field investigations of the Lime Sludge Ponds indicate that the sludge within the subunit is homogeneous. While radionuclides are present in the sludge, sampling in the berm soils and glacial till beneath the ponds has determined that the soils have higher concentrations of most constituents than the sludge. Elevated concentrations of uranium and thorium were detected in downgradient perched groundwater wells, but samples collected from the K-65 Slurry Line Trench (outside of Operable Unit 2 boundaries) detected elevated radioisotope activities. The perched groundwater contamination may be due to both the Lime Sludge Ponds and the K-65 Slurry Line Trench.

Thirteen COCs have been identified for the Lime Sludge Ponds. These COCs consist of twelve radionuclides and one metal. The extent of COCs in the Lime Sludge Ponds is limited mostly to the berm soils surrounding the ponds. The COCs were also detected in the perched groundwater downgradient of the subunit. No impact from the Lime Sludge Ponds has been observed on the Great Miami Aquifer.

Inactive Flyash Pile

Field investigations of the Inactive Flyash Pile indicate that waste other than flyash was disposed of in the subunit. Sludge, clay-tile drain pipe, wood, nails, wire, construction debris, and small amounts of organic waste were found in addition to flyash. The flyash generally had lower concentrations of contaminants than the other material. A portion of the identified waste materials appear to be resting on or near the interface between the flyash and the native glacial overburden. The surface soils on the Inactive Flyash Pile also had elevated levels of radionuclides.

The occurrence of uranium contamination in the perched groundwater beneath the Inactive Flyash Pile appears to be related to waste materials buried within or near this subunit. The perched groundwater appears to discharge through seeps into the Paddys Run drainage channel or directly into the Great Miami Aquifer through regions where the glacial overburden has been eroded. This is believed to be the most significant mechanism to transport uranium contamination from Operable Unit 2 into the

Great Miami Aquifer. Uranium contamination in the Great Miami Aquifer was not detected upgradient or from the northern part of the subunit. Uranium contamination was detected in two wells downgradient from the central part of the subunit. This suggests that a source of uranium contamination to the Great Miami Aquifer exists beneath the central part of the Inactive Flyash Pile.

Eleven COCs have been identified for the Inactive Flyash Pile. These COCs consist of eight radionuclides, two metals, and one organic compound. The extent of COCs in the Inactive Flyash Pile covers most of the surface soils, subsurface soils, surface water, sediment, and perched water sampled within the subunit. Radionuclides appear to be connected to non-flyash waste such as sludge, wood, and construction debris, whereas organics appear to be intermixed with the flyash, possibly from dust control spraying. Uranium is the only COC detected in the Great Miami Aquifer downgradient of the subunit.

South Field

Field investigations indicate that dumping of different types of material took place in the South Field, making the area heterogenous. Test trenches uncovered a range of waste materials including concrete, steel pipe, sheet steel, wood, and clay tile. The results of wipe samples taken from these materials indicate that they represent a potential source for the leaching of radionuclides to groundwater.

Twenty-six COCs have been identified for the South Field. These COCs consist of 13 radionuclides, 4 metals, and 9 organic compounds. The extent of COCs in the South Field covers most of the surface and subsurface soils, surface water, sediment, perched groundwater, and groundwater sampled within the subunit. Radionuclides and organics were detected in higher concentrations in the northern portion of the South Field. The COCs were also detected in the perched groundwater beneath the subunit and in the Great Miami Aquifer downgradient of the subunit.

Active Flyash Pile

It has been determined from field observations and historical documentation that the Active Flyash Pile contains only flyash. Interviews with former processing personnel indicated that organic No. 23 compounds could have been sprayed on the flyash to reduce fugitive emissions of particulates. ~~The analytical results of the RI field investigation do not support this speculation.~~

Fourteen COCs have been identified for the Active Flyash Pile. These COCs consist of 11 radionuclides and 3 metals. The extent of COCs in the Active Flyash Pile covers most of the surface soils, subsurface soils, and sediment within the subunit. Uranium is the only COC detected in the Great Miami Aquifer downgradient of the subunit.

5.2 PATHWAYS OF CONTAMINANT MIGRATION

This section summarizes the results of the evaluation of constituent migration from Operable Unit 2. The potential routes of contaminant migration have been determined to be surface water, groundwater, and air.

- Surface Water
  - Dispersion of contaminants transported to Paddys Run Creek via surface water runoff from the Operable Unit 2 area, for both surface water and sediments
  - Discharges of water from Paddys Run to both the Great Miami River and Great Miami Aquifer
- Groundwater
  - Groundwater transport of contaminants from Operable Unit 2 is considered to be the most significant pathway for the migration of wastes from Operable Unit 2. The Great Miami Aquifer, which is designated as a sole-source aquifer, underlies the Operable Unit 2 subunits.
  - Leachate migration from the subunits
  - Vadose zone transport vertically downward to the Great Miami Aquifer
  - Transport of contaminants through groundwater
  - Infiltration of contaminated surface water from Paddys Run to the aquifer
- Air
  - Dispersion of radionuclides (e.g., uranium, thorium, and technetium)
  - Dispersion of a variety of inorganic constituents
  - Dispersion of organic constituents

The routes of exposure to human receptors will be outlined in Section 6.0, Summary of Site Risks.

6.0 SUMMARY OF SITE RISKS

The potential risk from Operable Unit 2 subunits, current and future, has been calculated in the Operable Unit 2 RI (DOE 1995a) as the Baseline Risk Assessment. This assessment was based on the nature and extent of the contaminants found in Operable Unit 2 during field investigations. Computer modeling was performed to predict the fate and transport of constituents of potential concern over a 1,000-year time period. The Operable Unit 2 Baseline Risk Assessment is summarized in this section. For more in-depth information on the methodology and results of the fate and transport computer modeling and the methodology and details of the Baseline Risk Assessment, refer to Appendices A and B of the RI Report for Operable Unit 2.

6.1 OVERVIEW OF THE BASELINE RISK ASSESSMENT

A baseline risk assessment was conducted using EPA risk assessment methodology to provide an evaluation of the potential threat (both current and future) to human health and the environment caused by constituent releases from Operable Unit 2 in the absence of any remedial action (the "no action" alternative). The assessment provides the basis for determining whether remedial action is necessary. To support this determination for Operable Unit 2, the risk for each subunit was quantified separately. The primary objectives of the Baseline Risk Assessment are to: (1) determine those constituents that posed a significant risk to receptors; (2) perform an exposure assessment to determine the pathways and media of concern; (3) determine toxicity levels of constituents in relevant media within the boundaries of Operable Unit 2 (e.g., air, soil, water); (4) determine the magnitude of expected impact or threat and its likelihood.

The chemical and radiological constituents present within the Operable Unit 2 subunits present potential risks to human and environmental receptors. Two types of human health effects can result from exposures to radionuclides and chemicals: (1) carcinogenic (e.g., lung cancer caused by inhalation of radon) and (2) noncarcinogenic (e.g., nephritis of the kidney caused by ingestion of uranium). To limit the likelihood of someone developing cancer from exposure to contamination at a CERCLA site, the EPA has established an acceptable range of incremental lifetime cancer risk (ILCR). This range is from $1x10^{-4}$ to $1x10^{-6}$. Cancer risk is defined as the incremental probability of an individual developing cancer over a lifetime as a result of exposure to a potential carcinogen. The ILCR of $1x10^{-6}$ is referred to as the "point of departure" and provides a reference for the risk estimates presented in the Operable Unit 2 Baseline Risk Assessment.

To put the ILCR acceptable range in the context of the background cancer rate, it is estimated that about one in three Americans will develop cancer during their lifetime from all causes, and that the risk from exposure to naturally-occurring radiation in the environment is about $1x10^{-2}$, primarily from radon. Thus, the EPA acceptable range for CERCLA cleanup sites is a very small percentage of the normal cancer risk expected in the general United States population from everyday exposures and other causes. For example, the ILCR targeted by the upper end of EPA's range (i.e., $1x10^{-4}$) means that if all persons in a population of 10,000 were assumed to be repeatedly exposed to a site's contaminants, one person might develop cancer as a result of those exposures, in addition to the approximately 3,300 cancer cases expected from all other causes; similarly, for the ILCR point of departure ($1x10^{-6}$), one person in a population of 1,000,000 might develop cancer in addition to the approximately 330,000 cancer cases expected from all other causes.

EPA has developed a measure for noncancerous hazards from chemicals that is called a "hazard quotient" (HQ). The HQ is determined by comparing the amount of a specific chemical to which someone might be exposed at a site with the dose that the scientific community considers safe or acceptable for that chemical. An HQ of greater than 1.0 indicates that the exposure level exceeds the protective level for that chemical. Exposures to more than one chemical can result in multiple HQs. The sum of these HQs equals the hazard index (HI). If the HI exceeds 1.0, an adverse health effect might result from the estimated exposure. Because the hazards are additive, 0.2 is the hazard point of reference for the results presented in the Operable Unit 2 Baseline Risk Assessment.

For someone to be at risk from a chemical hazard, the individual must be exposed to the waste at the site. To help determine if there is a need to undertake cleanup at a CERCLA site, the EPA evaluates the risk an individual site poses, assuming that no additional engineering controls were installed to prevent the migration of contaminants from the subunits. By this approach, the primary hazards can be identified, and it can be determined whether someone who might enter the site or who uses the site in the future could be at risk. This is referred to as a baseline risk assessment.

6.1.1 Identification of Contaminants of Concern

The Operable Unit 2 RI Report identified the constituents of potential concern (CPCs) present within each subunit's media. CPCs include those constituents which are present at levels above background concentrations and at levels that exceed EPA-approved screening criteria. The screening criteria used is $1x10^{-7}$ (ten times lower than the ILCR point of departure of $1x10^{-6}$) and a HI of 0.1 (one tenth of

the HI level that indicates hazard from a chemical). Modeling is used to predict constituent movement from source areas to receptor locations through various media (e.g., groundwater or air). The Operable Unit 2 Baseline Risk Assessment evaluated constituents and exposure pathways to determine their potential current and future impacts on human health. Constituents which resulted in risks to a receptor of greater than $1x10^{-6}$ or which yielded a HI greater than 0.2 were designated as COCs. COCs for Operable Unit 2 are presented by subunit and media in Table 6-1 for both the private ownership and federal ownership scenarios. The COCs under the federal ownership scenario are marked with an asterisk. Section 6.0 and Appendix B of the Operable Unit 2 RI Report present a more detailed discussion of the COCs for each subunit.

6.1.2 Exposure Assessment for the Baseline Risk Assessment

The exposure assessment was developed to depict what may happen in and around the FEMP site if no further remedial actions are taken. Exposure scenarios were used to determine the need for additional cleanup activities at the site.

The baseline exposure scenarios are used to identify the sources of contamination and the potential routes to humans by presenting the exposure pathways for each land use scenario. The exposure scenarios evaluated include: (1) current land use with access controls; (2) current land use without access controls; (3) future land use with federal ownership; and (4) future land use with private ownership. These exposure scenarios were carried through the decision-making process for this operable unit to develop the maximum and minimum cleanup goals, with the understanding that the final goals would fall within this range. Figure 6-1 provides a visual description of the receptors, media, and pathways considered in the baseline risk assessment.

6.1.2.1 Current Land Use With Access Controls

This scenario was evaluated for current conditions assuming that DOE maintains the FEMP site as it exists with access controls. The following receptors were evaluated for this scenario: (1) trespassing youth; (2) on-property groundskeeper; (3) off-property resident farmers (adult and child); and (4) Great Miami River users.

6.1.2.2 Current Land Use Without Access Controls

A second current land-use scenario assumes that access to the FEMP site is no longer controlled and cattle are assumed to graze on the site. In addition to the receptors for current land use without

access controls, an additional receptor for this scenario was the user of meat and milk products from livestock grazing on the site.

6.1.2.3 Future Land Use With Federal Ownership

This scenario was evaluated for future land use assuming that the federal government maintains ownership of the FEMP site and that access controls remain in effect. The receptors evaluated under this scenario included: (1) expanded trespasser (one who makes repeated unauthorized entry to and wanders freely over the site); (2) off-property resident farmers (adult and child); and (3) Great Miami River users.

6.1.2.4 Future Land Use With Private Ownership

This second future land-use scenario assumes that the FEMP site is no longer owned by the federal government, that all access controls are discontinued, and that the site changes to agricultural use. For this scenario, the following receptors were evaluated: (1) reasonable maximum exposure (RME) on-property resident farmers (adult and child); (2) central tendency (CT) on-property resident farmer (adult); (3) homebuilder; and (4) perched groundwater user. The RME on-property resident farmer receptor includes more conservative exposure conditions than the CT on-property resident farmer, which represents typical conditions.

6.1.2.5 Exposure Point Concentrations

The exposure point concentration is the concentration of a constituent in an environmental medium that may be contacted by a real or hypothetical receptor. It is used in combination with other exposure parameters in intake equations to quantify the actual intake [in milligrams/kilograms-day (mg/kg-day) for chemicals and pCi for radionuclides] that a receptor may receive via a specific pathway (e.g., soil, groundwater, etc.) and route of exposure (e.g., ingestion, inhalation, and dermal contact).

Exposure point concentrations for Operable Unit 2 were determined in different ways, depending on whether exposures were assumed to be current or future and depending on the environmental medium of interest. To be consistent with the concept of the RME scenario required by EPA, an estimate of the highest exposure that can reasonably be expected to occur requires a reasonable maximum estimate of the concentration of each contaminant in each exposure medium. Except for soil, exposure source term concentrations for all media were modeled. Because of the uncertainty

FER\CRU2RI\APP-B\FIGB2-2.DRW January 21, 1995

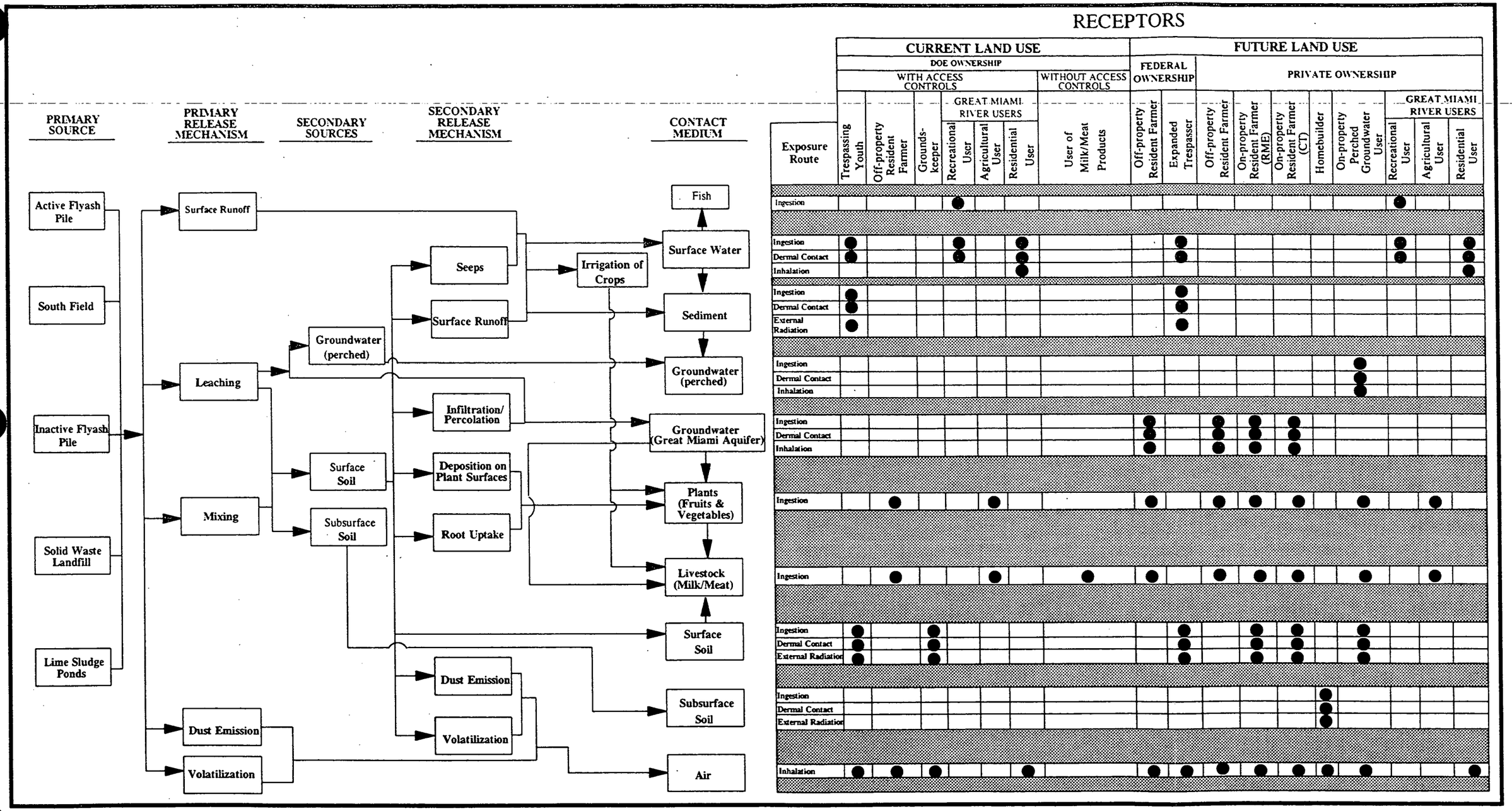

FIGURE 6-1 GENERAL CONCEPTUAL SITE MODEL/OPERABLE UNIT 2

TABLE 6-1

OPERABLE UNIT 2 CONTAMINANTS OF CONCERN

Solid Waste Landfill	Lime Sludge Ponds	Inactive Flyash Pile	South Field	Active Flyash Pile
Surface Soil				
Neptunium-237	Cesium-137	Radium-226*	Cesium-137	Cesium-137
Radium-226*	Radium-226*	Radium-228*	Neptunium-237	Neptunium-237*
Radium-228*	Radium-228*	Thorium-228*	Radium-226*	Radium-226*
Strontium-90	Thorium-228*	Thorium-232*	Radium-228*	Radium-228*
Thorium-228*	Thorium-230	Arsenic*	Strontium-90	Thorium-228*
Thorium-230	Thorium-232*	Dibenzo(a,h)anthracene	Technetium-99	Thorium-232*
Thorium-232*	Uranium-238*		Thorium-228*	Arsenic*
Plutonium-238	Uranium-total*		Thorium-230*	Beryllium
Uranium-234			Thorium-232*	
Uranium-235/236			Uranium-234	
Uranium-238*			Uranium-235/236	
Antimony			Uranium-238	
Arsenic			Uranium-total	
Beryllium			Arsenic	
Benzo(a)anthracene			Beryllium	
Benzo(a)pyrene			Lead*†	
Benzo(b)fluoranthene			Aroclor-1254	
Dibenzo(a,h)anthracene			Aroclor-1260*	
Indeno(1,2,3-cd)pyrene			Benzo(a)anthracene	
			Benzo(a)pyrene*	
			Benzo(b)fluoranthene	
			Benzo(k)fluoranthene	
			Dibenzo(a,h)anthracene*	
			Dieldrin	
			Indeno(1,2,3-cd)pyrene*	
Surface Water				
No COCs	No COCs	No COCs	No COCs	No COCs
Sediment				
Uranium-total*	No COCs	No COCs	Radium-226*	Radium-226* Arsenic*

See footnotes at end of table.

TABLE 6-1
(Continued)

Solid Waste Landfill	Lime Sludge Ponds	Inactive Flyash Pile	South Field	Active Flyash Pile
Groundwater (Great Miami Aquifer)				
Uranium-234 Uranium-235/236 Uranium-238 Uranium-total	Uranium-234 Uranium-235/236 Uranium-238 Uranium-total	Uranium-234* Uranium-235/236* Uranium-238* Uranium-total*	Uranium-234* Uranium-235/236* Uranium-238* Uranium-total*	Radium-226 Strontium-90 Uranium-234* Uranium-235/236* Uranium-238* Uranium-total*
Perched Groundwater				
Technetium-99 Carbazole Uranium-234 Uranium-235/236 Uranium-238 Uranium-total	Neptunium-237 Strontium-90 Technetium-99 Uranium-234 Uranium-235/236 Uranium-238 Uranium-total	No COCs	No COCs	No COCs
Impact on Air (Gaseous Emissions)				
Radon-222	No COCs	Radon-222	Radon-222*	Radon-222
Great Miami River Surface Water				
No COCs	No COCs	No COCs	Radium-226* Technetium-99*	No COCs

This table includes COCs to be considered under both the private ownership and the federal ownership scenarios.

* COCs marked with an asterisk are for the federal ownership scenario.

† Lead is a COC for the Firing Range only, not the entire South Field area.

Source: Table 2-1, Operable Unit 2 FS Report.

associated with any estimate of exposure point concentrations for soil, the 95 percent upper confidence limit (UCL) on the calculated mean for either a normal or lognormal distribution is the recommended statistic (concentration value) to be constructed from measured contaminant concentration data and used in risk assessments (EPA 1992a). Derivation of the 95 percent UCL for each environmental medium is described in detail in Appendix B, Section B.2.0, of the Operable Unit 2 RI Report.

Exposure Point Concentrations for Soil

Exposure point concentrations for direct contact surface soil exposure pathways, under both current and future land use assumptions, are the 95 percent UCLs determined from surface soil data using the process described in the FEMP guidelines for determining CPCs and Appendix B, Section B.2.0, of the Operable Unit 2 RI Report.

Exposure Point Concentrations for Groundwater

Current exposures to groundwater at the FEMP will be addressed as part of the Operable Unit 5 RI. Exposure to potential future concentrations of constituents in groundwater from contaminated material in each operable unit are addressed during each operable unit baseline risk assessment. Future exposure point concentrations for groundwater are determined from the results of groundwater transport modeling, as described in detail in Section 5.0 and Appendix A of the Operable Unit 2 RI Report.

Because the South Field and Inactive Flyash Pile form one contiguous area, source terms from these two subunits were combined for assessment of exposures to constituents migrating in groundwater from the South Field and Inactive Flyash Pile. For an assessment of exposures to contaminants migrating from the Active Flyash Pile, Solid Waste Landfill, and Lime Sludge Ponds, independent source terms were derived.

Soil CPCs for each subunit (Inactive Flyash Pile and South Field combined) were subjected to leachate estimations as described in Section 5.4.2.1 of the Operable Unit 2 RI Report. CPCs determined to be present in leachate above screening criteria (derived from EPA Region III ILCR of 1.0×10^{-7} and a HI of 0.1) were then modeled in the vadose zone [using one-dimensional analytical solute transport (ODAST)] using the methodology outlined in Section 5.4.2.2 of the Operable Unit 2 RI Report. Leachate concentrations are modeled through the vadose zone to the regional aquifer to

yield the calculated future concentrations in the aquifer directly underlying the waste area. Concentrations of CPCs determined to be present at this interface at levels above an ILCR of $1x10^{-7}$ and a HI of 0.1 were then selected as groundwater CPCs; their concentrations were estimated at specific locations (on-subunit, on-property, and off-property).

Off-property concentrations of constituents in groundwater were calculated using the regional aquifer model, Sandia Waste Isolation Flow and Transport (SWIFT) III (Geotrans 1987). The maximum calculated concentrations in the aquifer underlying the Active Flyash Pile, South Field and Inactive Flyash Pile Area (combined), Solid Waste Landfill, and Lime Sludge Ponds were used to estimate on-subunit exposures. The maximum calculation concentrations on-property and at the fenceline were used for exposure point concentrations for on-property and off-property future groundwater exposures. Details of the model and parameters used to calculate future CPC concentrations in the Great Miami Aquifer are presented in Section 5.0 of the Operable Unit 2 RI Report. The locations of calculated maximum off-property concentrations of contaminants transported from the waste areas of Operable Unit 2 by groundwater are also shown in Section 5.0 of the Operable Unit 2 RI Report.

Exposure Point Concentrations for Surface Water and Sediment

Like groundwater, exposures to current concentrations in surface water and sediment, if present, outside the boundaries of Operable Unit 2 waste areas, are to be addressed in the Operable Unit 5 Baseline Risk Assessment. CPC exposure point concentrations for current exposures to surface water and sediment within each subunit were estimated using fate and transport modeling. For future exposures to surface water on the subunit and the Great Miami River, fate and transport modeling was used to determine CPC exposure point concentrations. Surface water CPCs included all CPCs selected for surface soil within each subunit. The Modified Universal Soil Loss Equation (MUSLE), a commonly used soil loading model (EPA 1988), was used to determine if soil runoff would contribute significantly to constituent concentrations on the subunit and consequently in the Great Miami River. The input for this model is the 95 percent UCL surface soil concentrations. The model and modeling results are presented in Section 5.0 and Appendix A of the Operable Unit 2 RI Report.

Exposure Point Concentrations for Air

Operable Unit 2 airborne concentrations of constituents from the individual waste areas were modeled for both current and future conditions at on-subunit, on-property, and off-property locations. The

model assumed mass loading (fugitive dust emissions) of surface soil to the air from each waste area and subsequent transport and dispersion of contaminants. The model and parameters for air dispersion are described in Section 5.0 of the Operable Unit 2 RI Report. The initial source term for air modeling is the 95 percent UCL soil concentration. The results of air modeling provide the highest annual average air concentrations and deposition rates at each of the specified locations (on-subunit, on-property, off-property). This allows for calculation of exposures to constituents being released to air and exposures resulting from ingestion of vegetation on which air particulates are deposited.

6.1.2.6 Exposure Assessment Parameters

The equations and parameter values used in estimating intake are provided in Section B.2.2 of Appendix B of the Operable Unit 2 RI Report. Attachment III of Appendix B of the RI Report presents the calculated intakes by subunit for each current and assumed future receptor, media, and pathway. The trespassing youth has the lowest exposure frequency and duration of all of the current and assumed future land use receptors. The trespassing youth is assumed to be exposed 52 days a year for 12 years. In contrast, the on-site RME farmer has the maximum exposure duration and frequency. The on-site RME farmer is assumed to be exposed to on-site contaminants 24 hours a day, 350 days a year for 70 years. All other receptors have exposure durations and frequencies somewhere between the trespassing youth and the on-site RME farmer to evaluate a range of possible exposures. Table 6-2 lists the principal exposure parameters for a range of receptors.

6.1.3 Toxicity Assessment

Chemical Carcinogens

The toxicity information considered in the assessment of potential carcinogenic risks includes (1) a weight-of-evidence classification and (2) a slope factor. The weight-of-evidence classification qualitatively describes the likelihood that a chemical is a human carcinogen and is based on an evaluation of available data from human and animal studies. A chemical may be placed by EPA in one of three groups in EPA's classification system to indicate its potential for carcinogenic effects: Group A, a human carcinogen; Group B1, or B2, a probable human carcinogen; and Group C, a possible human carcinogen. Chemicals that cannot be classified as human carcinogens because of a lack of data are placed by EPA in Group D, and those for which there is evidence of noncarcinogenicity in humans are placed by EPA in Group E.

TABLE 6-2

PRINCIPAL EXPOSURE PARAMETERS FOR SELECTED OPERABLE UNIT 2 BASELINE RISK ASSESSMENT RECEPTORS

Parameter	Expanded Trespasser (Youth)	On-Property RME Farmer	Off-Property Farmer
All Pathways			
Exposure Frequency (days/year)	110	350	350
Exposure Duration (years)	12	70	70
Body Weight (kg)	43	70	70
Inhalation of Particulates			
Inhalation Rates (m^3\hour)	0.83	0.83	0.83
Exposure Time (hours\day)	2	5.7	5.7
Ingestion of Drinking Water			
Ingestion Rate (Liters/day)	NA[a]	2	2
Fraction Ingested	NA	1	1
Ingestion of Soil			
Ingestion Rate (mg/day)	100	180	NA
Fraction Ingested	0.125	1	NA
Ingestion of Sediment			
Ingestion Rate (mg/day)	100	NA	NA
Fraction Ingested	0.063	NA	NA
External Radiation Exposure			
Exposure Time Indoors (hours/day)	NA	18.3	NA
Exposure Time Outdoors (hours/day)	2	5.7	NA
Shielding Ratio Indoors	NA	0.5	NA
Shielding Ratio Outdoors	0	0	NA
Ingestion of Homegrown Fruits			
Ingestion Rate (kg/day)	NA	0.142	0.142
Fraction Ingested	NA	0.3	0.3

See footnote at end of table

TABLE 6-2
(Continued)

Parameter	Expanded Trespasser (Youth)	On-Property RME-Farmer	Off-Property Farmer
Ingestion of Homegrown Vegetables			
Ingestion Rate (kg/day)	NA	0.201	0.201
Fraction Ingested	NA	0.40	0.40
Ingestion of Home-Produced Meats			
Ingestion Rate (kg/day)	NA	0.101	0.101
Fraction Ingested	NA	0.50	0.75
Ingestion of Milk			
Ingestion Rate (Liters/day)	NA	0.40	0.40
Fraction Ingested	NA	0.75	0.75
Ingestion of Surface Water			
Ingestion Rate (mg/L or pCi/L)	0.035	NA	NA
Exposure Time (hours)	1	NA	NA

[a]NA = not applicable.

Source: Tables B.2-4A and B.2-4B, Operable Unit 2 RI Report.

000071

The cancer slope factor is the toxicity value used to quantitatively express the carcinogenic risk of cancer-causing constituents. It is defined as the upper-bound estimate of the probability of cancer incidence per unit dose averaged over a lifetime. Slope factors are derived from studies of carcinogenicity in humans and/or laboratory animals and are typically calculated for compounds in Groups A, B1, and B2. Slope factors are specific to a chemical and route of exposure and expressed in units of $(mg/kg\text{-}day)^{-1}$ for both oral and inhalation routes. The induction of cancer by dermal absorption is evaluated using oral slope factors. Inhalation cancer toxicity values are usually expressed as inhalation unit risks in units of reciprocal micrograms/cubic meter ($\mu g/m^3$), $1/\mu g/m^3$. The primary sources of these toxicity values are EPA's Integrated Risk Information System (IRIS) (EPA 1993a) and the quarterly updated Health Effects Assessment Summary Tables (HEAST) (EPA 1993b). Other EPA sources of cancer slope factors were also consulted when available. The dermal cancer slope factors for COC chemical carcinogens are listed in Table 6-3. The oral and inhalation cancer slope factors for COC chemical carcinogens are listed in Table 6-4.

Radiocarcinogens

Carcinogenicity is the limiting deleterious effect at the levels of radiation dose encountered within Operable Unit 2 and has been used as the sole basis for assessing the radiation-related human health risks of a site contaminated with radionuclides (EPA 1989a).

The relationship between radiation dose and health effects is relatively well characterized for high doses (i.e., > 10 rad). Hence, risk estimates are strictly applicable only to large populations exposed to high levels of radiation. Lower levels of exposure may constitute a health risk, but a direct cause and effect relationship is difficult to establish because a particular effect in a specific individual can be produced by many different processes. For low doses, health effects are presumed to occur but can only be estimated statistically. Therefore, the risk of cancer incidence from exposure to low levels of ionizing radiation must be extrapolated from incidence data at higher doses.

Under CERCLA methodology, the EPA assumes a unit intake of, or external exposure to, a radionuclide over a lifetime. The annual radiation dose equivalent from the radionuclide to each organ in each year of life is calculated. The average excess number of all types of radiation-induced fatal cancers that occur in a year is then estimated for the corresponding dose equivalents received during that year and relevant preceding years. The excess number of radiation-induced fatal cancers is derived from epidemiological data, extrapolation from high radiation doses to low doses, and

TABLE 6-3

DERMAL REFERENCE DOSES AND CANCER SLOPE FACTORS FOR CONTAMINANTS OF CONCERN CHEMICAL CARCINOGENS

Chemical		Gastrointestinal Absorption Fraction	Dermal Reference Dose (mg/kg-day)	Dermal Slope Factor $(mg/kg\text{-}day)^{-1}$
INORGANICS				
Arsenic		0.95[g]	2.85×10^{-4}	1.84×10^{0}
Beryllium		0.01[g]	5.00×10^{-5}	ND[b]
Cadmium	(food)	0.05[a]	5.00×10^{-5}	ND
	(water)		2.50×10^{-5}	ND
Lead		NA[i]	ND	ND
Manganese	(food)	0.03[a]	4.20×10^{-3}	ND
	(water)		1.50×10^{-4}	ND
Molybdenum		0.38[a]	1.90×10^{-3}	ND
Nickel		0.01[c]	2.00×10^{-3}	ND
Selenium		0.8[a]	4.00×10^{-3}	ND
Thallium		1[a]	7.00×10^{-5}	ND
Uranium-Total[d]		0.05[c]	1.50×10^{-4}	ND
VOLATILES				
Benzo(a)anthracene		0.43[a]	ND	ND
Benzo(a)pyrene		0.43[a]	ND	ND
Benzo(b)fluoranthene		0.43[a]	ND	ND
Benzo(g,h,i)perylene		0.43[a]	ND	ND
Benzo(k)fluoranthene		0.43[a]	ND	ND
Carbazole		0.9	ND	0.02
Dibenzo(a,h)anthracene		0.43[a]	ND	ND
Dibenzofuran		NA[i]	ND	ND
Indeno(1,2,3-cd)pyrene		0.43[a]	ND	ND
2-Methylnaphthalene		1.0[f]	ND	ND

See footnotes at end of table

TABLE 6-3
(Continued)

Chemical	Gastrointestinal Absorption Fraction	Dermal Reference Dose (mg/kg-day)	Dermal Slope Factor $(mg/kg\text{-}day)^{-1}$
SEMIVOLATILES (Continued)			
Phenanthrene	0.9[e]	ND	ND
Tributyl phosphate	0.9[e]	4.50×10^{-3}	ND
PESTICIDE/PCBS			
Dioxins/furans	0.5[h]	ND	3.00×10^{5}

[a]See the Toxicity Profile for this chemical in Attachment B.II of the Operable Unit 2 RI Report.

[b]ND = No data available.

[c]EPA 1989a, "Risk Assessment Guidance for Superfund, Volume, Human Health Evaluation Manual (Part A)", EPA/540/1-89/002, pp. A-2 to A-3.

[d]The carcinogenicity of uranium is due to its radioactivity rather than chemical toxicity; its cancer potency due to penetrating external radiation is presented in Table B.2-11 of the Operable Unit 2 RI Report.

[e]See Section B.2.5.2 of the Operable Unit 2 RI Report.

[f]Jones, T.D. and B.A. Owen, 1989, "Health Risks from Mixtures of Radionuclides and Chemicals in Drinking Water", Oak Ridge National Laboratory, Oak Ridge, Tennessee, ORNL-6533.

[g]Dollarhide 1993, Memorandum from Environmental Criteria and Assessment Office (ECAO) to EPA Region V, 7/21/93, including Attachments 1-6.

[h]ATSDR (Agency for Toxic Substances and Disease Registry) 1990, "Toxicological Profile for 2,3,7,8-Tetrachlorodibenzo-p-dioxin," Draft for Public Comment, U.S. Public Health Service, Atlanta, Georgia.

[i]NA - Not applicable.

Source: Table B.2-12, Operable Unit 2 RI Report.

TABLE 6-4

ORAL AND INHALATION CANCER SLOPE FACTORS FOR CONTAMINANTS OF CONCERN RADIOLOGICAL AND CHEMICAL CARCINOGENS

Parameter	Oral Cancer Slope Factor (mg/kg-day)$^{-1}$	Inhalation Cancer Slope Factor[a] (mg/kg-day)$^{-1}$	Tumor Site		Cancer Classification	Source
			Oral	Inhalation		
RADIOLOGICAL						
Cesium-137+1d	2.8×10^{-11}	1.9×10^{-11}	ND[n]	ND	A	m
Neptunium-237+1d	2.2×10^{-10}	2.9×10^{-8}	ND	ND	A	m
Lead-210+2d	6.6×10^{-10}	4.0×10^{-9}	ND	ND	A	m
Plutonium-238	2.2×10^{-10}	3.9×10^{-8}	Neoplasms/Lung tumors	ND	A	m
Plutonium-239/240	2.3×10^{-10}	3.8×10^{-8}	ND	ND	A	m
Radium-224	3.8×10^{-11}	1.2×10^{-9}	Bone/Cancer/ Paranasal Sinus	ND	A	m
Radium-226+8d	7.8×10^{-10}	7.0×10^{-9}	ND	ND	A	m
Radium-228+1d	1.0×10^{-10}	6.9×10^{-10}	ND	ND	A	m
Ruthenium-106	9.5×10^{-12}	4.4×10^{-10}	ND	ND	A	m
Strontium-90+1d	3.6×10^{-11}	6.2×10^{-11}	ND	ND	A	m
Technetium-99	1.3×10^{-12}	8.3×10^{-12}	ND	ND	A	m
Thorium-228+7d	5.5×10^{-11}	7.8×10^{-8}	ND	ND	A	m
Thorium-230	1.3×10^{-11}	2.9×10^{-8}	ND	ND	A	m
Thorium-232+10d	1.7×10^{-10}	1.1×10^{-7}	ND	ND	A	m
Thorium-total	ND	ND	ND	ND	A	m
Uranium-234	1.6×10^{-11}	2.6×10^{-8}	Bone Sarcoma	ND	A	m
Uranium-235	1.6×10^{-11}	2.5×10^{-8}	ND	ND	A	m
Uranium-235/236	1.6×10^{-11}	2.5×10^{-8}	ND	ND	A	m
Uranium-238+2d	2.8×10^{-11}	5.2×10^{-8}	ND	ND	A	m
Uranium-total[e]	ND	ND	ND	ND	A	m
INORGANICS						
Antimony	ND	ND	ND	ND	ND	b
Arsenic	$1.75 \times 10^{+0}$[h]	$1.5 \times 10^{+1}$	Lung	Respiratory System	A	b,c
Barium	ND	ND	ND	ND	ND	b,g

See footnotes at end of table.

FER\CRU2\ROD\CME\TABLE6-6\April 4, 1995 10:37am

000075

6793

TABLE 6-4
(Continued)

Parameter	Oral Cancer Slope Factor $(mg/kg\text{-}day)^{-1}$	Inhalation Cancer Slope Factor[a] $(mg/kg\text{-}day)^{-1}$	Tumor Site		Cancer Classification	Source
			Oral	Inhalation		
INORGANICS (Continued)						
Beryllium	$4.3 \times 10^{+0}$	$8.4 \times 10^{+0}$	Total Tumors	Lung	B2	b
Cadmium	ND	$6.3 \times 10^{+0}$	ND	Respiratory System	A	b,c
Lead (Inorganic)	ND	ND	ND	ND	B2	b
Nickel	ND	8.4×10^{-1}	ND	Respiratory System	A	b,g
Selenium	ND	ND	Liver, Lung	ND	B2	b
Thallium	ND[i]	ND	ND	ND	D	b
VOLATILES						
1,1,2-Trichlorotrifluoromethane	ND	ND	ND	ND	ND	k
1,2-Diethylbenzene	ND	ND	ND	ND	ND	k
1,4-Dioxane	1.1×10^{-2}	ND	Nasal cavity/Liver	ND	B2	j
SEMIVOLATILES						
2-Methylnapthalene	ND	ND	ND	ND	ND	ND
4-Methylphenol(o-cresol)	ND	ND	ND	ND	C	b
Benzo(a)anthracene	7.3×10^{-1}	6.1×10^{-1}	ND	Pulmonary adenomas	B2	d,f
Benzo(a)pyrene	$7.3 \times 10^{+0}$	6.1×10^{-0}	ND	Total tumors	B2	j
Benzo(b)fluoranthene	7.3×10^{-1}	6.1×10^{-1}	ND	Lung	B2	j
Benzo(g,h,i)perylene	ND	ND	ND	ND	D	j
Benzo(k)fluoranthene	7.3×10^{-2}	6.1×10^{-2}	ND	ND	B2	j
Bis(2-Ethylhexyl)phthalate	1.4×10^{-2}	ND				j
Carbazole	2.0×10^{-2}	ND	ND	ND	ND	ND
Dibenzo(a,h)anthracene	$7.3 \times 10^{+0}$	$6.1 \times 10^{+1}$	ND	ND	ND	ND
Indeno(1,2,3-cd)pyrene	7.3×10^{-1}	6.1×10^{-1}	ND	ND	ND	j
Phenanthrene	ND	ND	ND	ND	ND	j
Tributyl phosphate	ND	ND	ND	ND	ND	j

See footnotes at end of table.

TABLE 6-4
(Continued)

Parameter	Oral Cancer Slope Factor (mg/kg-day)$^{-1}$	Inhalation Cancer Slope Factor[a] (mg/kg-day)$^{-1}$	Tumor Site		Cancer Classification	Source
			Oral	Inhalation		
PESTICIDES/PCBs						
Aroclor-1254	$7.70 \times 10^{+0}$	ND	Liver	ND	B2	l
Aroclor-1260	$7.70 \times 10^{+0}$	ND	Liver	ND	B2	l
Dieldrin	$1.60 \times 10^{+1}$	$1.60 \times 10^{+1}$	Liver/Lung	ND	B2	k
Heptachlorodibenzofuran[j]	$1.5 \times 10^{+4}$	$1.5 \times 10^{+4}$	ND	ND	ND	ND
Heptachlorodibenzo-p-dioxin[j]	$1.5 \times 10^{+4}$	$1.5 \times 10^{+4}$	ND	ND	ND	ND
Octaclorodibenzo-p-dioxin[j]	$1.50 \times 10^{+2}$	$1.50 \times 10^{+2}$	ND	ND	ND	ND
Tetrachlorodibenzofuran[j]	$1.5 \times 10^{+3}$	$1.5 \times 10^{+3}$	ND	ND	ND	ND

[a]Where only a unit risk for inhalation is available, the cancer slope factor is derived by assuming a 70 kg adult inhales 20m^3 of air/day.

[b]EPA IRIS database

[c]The HEAST (1992) presented an inhalation slope factor of 50 (mg/g-day)-1, based on absorbed dose (absorption factor of 0.3). A risk of 15 (mg/g-day)$^{-1}$ based on ambient dose is the value used in this risk assessment.

[d]EPA, HEAST, Annual FY-1991

[e]No data presented for chemically induced carcinogenicity - radiocarcinogenicity of uranium isotopes are discussed individually.

[f]Slope factors for benzo(a)pyrene used for B2 PAHs.

[g]EPA, HEAST, Annual FY 1992.

[h]Derived from the proposed inorganic arsenic ingestion unit risk [5×10^{-5} (μg/l)$^{-1}$]. "The uncertainties associated with ingested inorganic arsenic are such that estimates could be revised downward as much as an order of magnitude, relative to the risk estimates associated with most other carcinogens" (EPA 1993).

[i]Not classified or not classifiable as to human carcinogenicity.

[j]For polychlorinated dibenzo-p-dioxin and polychlorinated dibenzofurans, the 2, 3, 7, 8-TCDD toxicity equivalents will be calculated using the appropriate 1-TEFS/89 (1989 EPA Interim) Toxicity Equivalent Factor (EPA 1989c).

[k]EPA IRIS database 1994, May 1994

[l]EPA IRIS database 1994, September 1991

[m]EPA HEAST 1993

[n]ND = No data available

Source: Table B.2-8, Operable Unit 2 RI Report.

FER\CRU2\ROD\CME\TABLE6-6\April 4, 1995 10:37am

000027

6793
FEMP-OU02-4 DRAFT
April 8, 1995

hypothetical models for projecting risk through a lifetime. The relationship between cancer incidence and exposure to radioactive materials is quantified by using mathematical extrapolation models, which estimate the largest possible linear slope (within the 95 percent UCL) at low extrapolated doses consistent with the data. Because EPA is concerned with assessing cancer incidence, each radionuclide slope factor has been calculated by dividing the excess fatal cancer risk for that radionuclide by the mortality-to-incidence risk ratio (EPA 1989a) for the types of cancer induced by that radionuclide. This "radiocarcinogenicity slope factor" thus is characterized as the "maximum likelihood estimate of the age-averaged lifetime total excess cancer risk per unit intake or exposure" (EPA 1993b). That is, the true risk to humans, although not identifiable, is not likely to exceed this upperbound estimate; it may, in fact, be lower. The COC radiocarcinogenic oral and inhalation cancer slope factors are listed in Table 6-4.

Noncarcinogens

The potential for noncarcinogenic health effects resulting from exposure to chemical contaminants is assessed by comparing an exposure estimate (intake) to a reference dose (RfD). The RfD is expressed in units of mg/kg-day and represents a daily intake of constituent per kilogram of body weight that is not sufficient to cause the threshold effect of concern for the constituent.

A RfD is specific to the chemical, the route of exposure, and exposure duration. To derive a RfD, the EPA reviews all relevant human and animal studies for each compound and selects the study (or studies) pertinent to the derivation of the specific RfD. Each study is evaluated to determine the no-observed-adverse-effect level (NOAEL) or, if data are inadequate for such a determination, the lowest-observed-adverse-effect level (LOAEL). The NOAEL corresponds to the dose, in mg/kg-day, that can be administered over a lifetime without inducing observable adverse effects. The LOAEL corresponds to the lowest daily dose, in mg/kg-day, that can be administered over a lifetime that induces an observable adverse effect. The toxic effect characterized by the LOAEL is referred to as the "critical effect". To derive a RfD, the NOAEL (or LOAEL) is divided by uncertainty factors to ensure that the RfD will be protective of human health. Separate RfDs are needed for ingestion and inhalation pathways. The primary source of values for RfDs are the IRIS and the HEAST compiled and maintained by the EPA (EPA 1993a, 1993b). Other EPA sources of RfD values were also consulted, when available. The COC reference doses for noncarcinogenic chemicals are listed in Table 6-5. Dermal reference doses for noncarcinogenic chemical effects were listed in Table 6-3.

TABLE 6-5

CONTAMINANTS OF CONCERN REFERENCE DOSES FOR NONCARCINOGENIC CHEMICALS

Parameter	Chronic Oral Reference Dose (mg/kg-day)	Chronic Inhalation Reference Dose[a] (mg/kg-day)	Reference Concentration (mg/m^3)	Effect of Concern		Uncertainty Factor		
				Oral	Inhalation	Oral	Inhalation	Source
RADIOLOGICAL								
Uranium-total	3.0×10^{-3}	ND[b]	ND	Reduced body weight, renal damage	1000	ND	ND	ND
INORGANICS								
Antimony	4.0×10^{-4}	ND	ND	Taste threshold	Nasal Cavity Rhinitis	1	30	a,c
Arsenic	3.0×10^{-4}	ND	ND	Keratosis; hyperpigmentation	ND	3	ND	a
Barium	7.0×10^{-2}	1.43×10^{-4}	5.0×10^{-4}	Increased blood pressure	Fetotoxicity	3	1000	a,c
Beryllium	5.0×10^{-3}	ND	ND	None observed	ND	100	ND	a
Cadmium (food)	1.0×1^{-5}	ND	ND	Renal damage	Cancer	10	ND	a
Cadmium (water)	5.0×10^{-4}	ND	ND	Renal damage	Cancer	10	ND	a
Cyanide	2.0×10^{-2}	ND	ND	Weight loss, thyroid effects, myelin degradation	ND	100	ND	a
Lead (Inorganic)	ND[d]	ND	ND	CNS[h] effects	CNS effects	ND	ND	a
Manganese (oral & food)	1.4×10^{-1}	1.1×10^{-4}[a]	4.0×10^{-4}	No effects	ND	1	ND	a
Selenium	5.0×10^{-3}	ND	ND	Selenosis	ND	3	ND	a
Thallium	7.0×10^{-5}	ND	ND	Increased SGOT and serum LDH levels; alopecia	ND	3000	ND	a
VOLATILES								
1,1,2-Trichlorotrifluoromethane	3.0×10^{-1}	ND	ND	Survival/Histopathology	ND	1000	ND	f

See footnotes at end of table

FER\CRU2\ROD\CME\TABLE6-5\April 4, 1995 10:35am

000079

6793
FEMP-OU02-4 DRAFT
April 8, 1995

TABLE 6-5
(Continued)

Parameter	Chronic Oral Reference Dose (mg/kg-day)	Chronic Inhalation Reference Dose[a] (mg/kg-day)	Reference Concentration (mg/m^3)	Effect of Concern		Uncertainty Factor		
				Oral	Inhalation	Oral	Inhalation	Source
SEMIVOLATILES								
4-Methylphenol(p-cresol)	5.0×10^{-3}	ND[e]	ND	Reduced body weight gain; neurotoxicity	ND	1000	ND	a,c
Bis(2-Ethylhexyl)phthalate	2.0×10^{-2}	ND	ND	ND	ND	ND	ND	g
Tributyl phosphate	5.0×10^{-3}	ND	ND	ND	ND	ND	ND	g
PESTICIDES/PCBS								
Dieldrin	5.0×10^{-5}	ND	ND	Liver lesions	ND	100	ND	g

[a]EPA IRIS database 1993, July 1993.

[b]ND = No data available.

[c]EPA, HEAST, Annual FY-1992.

[d]The EPA RfD Work Group considers it inappropriate to develop a RfD for inorganic lead (1985).

[e]The health effects data for 4-methyphenol were reviewed by the EPA RfD/RfC work group and were determined to be inadequate for the derivation of an inhalation RfC (EPA 1993).

[f]EPA IRIS database 1993, February 1993.

[g]EPA IRIS database 1994, May 1994.

[h]CNS = Central nervous system

Source: Table B.2-7, Operable Unit 2 RI Report.

6.1.4 Risk Characterization

The risk characterization was performed for over 30 CPCs in 10 different media for each of the five Operable Unit 2 subunits. This characterization assumed that no additional engineering controls were installed to prevent the migration of contaminants from the subunits. The summary of results for the COCs in each media and subunit is provided in Section 6.0 of the Operable Unit 2 RI Report. Table 6-6 summarizes the total risks and hazards posed to receptors for both current land-use scenarios. The maximally exposed receptor for current land-use scenarios for each of the five subunits is the on-property groundskeeper, which had carcinogenic risks on the order of $1x10^{-4}$. These risks were dominated by external radiation from thorium-228, thorium-232, radium-226, and radium-228 in soil. The HIs of systematic toxic effects from each subunit to the groundskeeper were below 1.0. The HIs for the trespassing youth were below 1.0 for the Lime Sludge Ponds, Inactive Flyash Pile, and Active Flyash Pile, but were above 1.0 for the Solid Waste Landfill and the South Field. Calculated risks to the off-property resident farmers (adult and child) approached a range on the order of $1x10^{-7}$ to $1x10^{-9}$; total HIs for both the adult and child were well below 1.0.

Table 6-7 summarizes the risks and hazards posed to the receptors evaluated under the future land use with federal ownership scenario. The maximally exposed receptors under this scenario for each of the five subunits is the expanded trespasser and the off-property resident farmer. The expanded trespasser had a carcinogenic risk range on the order of $1x10^{-4}$ to $1x10^{-5}$. Major contributors to this risk include external radiation from thorium-228, thorium-232, radium-226, and radium-228. The HIs from each subunit to the expanded trespasser were below 1.0. Calculated risks to the off-property resident farmer approached a range on the order of $1x10^{-5}$ to $1x10^{-8}$. Both off-property resident farmer receptors (adult and child) had HIs that exceeded 1.0 from two subunits (Inactive Flyash Pile and South Field) due to ingestion of total uranium in groundwater.

Table 6-8 summarizes the risks and hazards posed to the receptors evaluated under the future land use with the private ownership scenario. The maximally exposed receptor associated with each of the five subunits under this scenario is the RME on-property resident farmer, with carcinogenic risks on the order of $1x10^{-2}$ to $1x10^{-5}$. The risks were primarily due to external radiation from radium-226, radium-228, thorium-228, and thorium-232 and from the ingestion of produce irrigated with groundwater contaminated with uranium. Total HIs from two subunits (Inactive Flyash Pile and

TABLE 6-6

CURRENT LAND USE SCENARIOS
CARCINOGENIC RISK AND HAZARD INDEX

Subunit	Risk Type[a]	Trespassing Youth	On-Property Groundskeeper	Off-Property Resident Farmer	Off-Property Resident Child	Use of Meat and Milk	Great Miami River Recreational User	Great Miami River Residential User	Great Miami River Agricultural User
Solid Waste Landfill	Carcinogenic	1.5×10^{-5}	3.4×10^{-5}	6.0×10^{-8}	2.7×10^{-9}	9.0×10^{-9}	2.8×10^{-10}	4.2×10^{-9}	6.5×10^{-7}
	Noncarcinogenic	8.6	4.3×10^{-3}	1.8×10^{-6}	6.4×10^{-6}	5.8×10^{-7}	1.1×10^{-7}	2.2×10^{-6}	1.1×10^{-4}
Lime Sludge Ponds	Carcinogenic	1.1×10^{-5}	4.5×10^{-5}	1.5×10^{-7}	1.4×10^{-8}	1.4×10^{-6}	NA[c]	NA	NA
	Noncarcinogenic	2.1×10^{-1}	1.3×10^{-1}	2.0×10^{-5}	9.3×10^{-5}	4.3×10^{-4}	NA	NA	NA
Inactive Flyash Pile	Carcinogenic	1.5×10^{-5}	5.0×10^{-5}	6.1×10^{-7}	7.9×10^{-8}	1.1×10^{-7}	8.4×10^{-9}	3.0×10^{-9}	5.3×10^{-9}
	Noncarcinogenic	1.0×10^{-1}	2.0×10^{-2}	5.5×10^{-5}	2.0×10^{-4}	1.4×10^{-5}	1.9×10^{-6}	4.2×10^{-6}	3.6×10^{-5}
South Field	Carcinogenic	1.0×10^{-4}	2.2×10^{-4}	6.4×10^{-7}	2.4×10^{-7}	4.5×10^{-6}	4.2×10^{-6}	6.3×10^{-8}	4.4×10^{-6}
	Noncarcinogenic	53	ND[b]	2.0×10^{-5}	7.2×10^{-5}	3.0×10^{-5}	8.0×10^{-7}	2.5×10^{-6}	4.0×10^{-5}
Active Flyash Pile	Carcinogenic	2.6×10^{-5}	8.0×10^{-5}	4.7×10^{-7}	6.6×10^{-8}	4.7×10^{-7}	1.4×10^{-9}	7.7×10^{-9}	3.5×10^{-9}
	Noncarcinogenic	3.6×10^{-2}	5.9×10^{-2}	6.2×10^{-4}	2.1×10^{-3}	3.7×10^{-3}	6.1×10^{-6}	2.1×10^{-5}	6.7×10^{-6}

[a]The carcinogenic risk value is the incremental lifetime cancer risk (ILCR) and the noncarcinogenic value is the hazard index (HI).

[b]ND = not determined because toxicity data not available.

[c]NA = the indicated land use is not applicable to the subunit.

Source: Table 7-1, Operable Unit 2 RI Report.

TABLE 6-7

FUTURE LAND USE WITH FEDERAL OWNERSHIP SCENARIO CARCINOGENIC RISK AND HAZARD INDEX

Subunit	Risk Type[a]	Expanded Trespasser	Off-Property Resident Farmer	Off-Property Resident Child
Solid Waste Landfill	Carcinogenic	2.0×10^{-5}	6.7×10^{-8}	3.5×10^{-9}
	Noncarcinogenic	2.7×10^{-1}	1.8×10^{-6}	6.4×10^{-6}
Lime Sludge Ponds	Carcinogenic	2.4×10^{-5}	1.7×10^{-7}	1.6×10^{-8}
	Noncarcinogenic	2.2×10^{-1}	2.0×10^{-5}	9.3×10^{-5}
Inactive Flyash Pile	Carcinogenic	3.0×10^{-5}	7.5×10^{-5}	4.0×10^{-6}
	Noncarcinogenic	1.0×10^{-1}	1.2	2.5
South Field	Carcinogenic	1.4×10^{-4}	8.7×10^{-5}	4.2×10^{-6}
	Noncarcinogenic	8.0×10^{-2}	1.1	3.1
Active Flyash Pile	Carcinogenic	4.9×10^{-5}	1.1×10^{-5}	7.2×10^{-7}
	Noncarcinogenic	4.2×10^{-2}	1.9×10^{-1}	7.9×10^{-1}
Operable Unit 2-Wide	Carcinogenic	8.7×10^{-5}	1.1×10^{-4}	NC[b]
	Noncarcinogenic	1.2×10^{-1}	3.7	NC

[a]The carcinogenic risk value is the Incremental Lifetime Cancer Risk (ILCR) and the noncarcinogenic value is the Hazard Index (HI).

[b]NC - Not calculated.

Source: Table 7-1, Operable Unit 2 RI Report.

TABLE 6-8

FUTURE LAND USE WITH PRIVATE OWNERSHIP SCENARIO CARCINOGENIC RISK AND HAZARD INDEX

Waste Subunit	Risk Type[a]	On-Property Farmer (RME)[b]	On-Property Resident Farmer (CT)[c]	On-Property Resident Child	Home Builder	Perched Groundwater User	Great Miami River Recreational User	Great Miami River Residential User	Great Miami River Agricultural User
Solid Waste Landfill	Carcinogenic	2.8×10^{-3}	2.0×10^{-4}	6.4×10^{-4}	9.0×10^{-6}	2.8×10^{-3}	2.8×10^{-10}	4.2×10^{-9}	6.5×10^{-7}
	Noncarcinogenic	2.9×10^{-1}	1.2×10^{-1}	1.0	4.8×10^{-1}	ND[d]	1.1×10^{-7}	2.2×10^{-6}	1.1×10^{-4}
Lime Sludge Ponds	Carcinogenic	1.3×10^{-5}	9.3×10^{-7}	1.2×10^{-6}	NA[e]	7.7×10^{-5}	NA	NA	NA
	Noncarcinogenic	1.7×10^{-3}	7.3×10^{-4}	7.9×10^{-3}	NA	3.1×10^{-3}	NA	NA	NA
Inactive Flyash Pile	Carcinogenic	1.5×10^{-3}	8.6×10^{-5}	7.7×10^{-5}	NA	NA	8.4×10^{-9}	3.0×10^{-9}	5.4×10^{-10}
	Noncarcinogenic	22	9.8	65	NA	NA	1.9×10^{-6}	4.2×10^{-6}	3.6×10^{-5}
South Field	Carcinogenic	3.4×10^{-2}	2.0×10^{-3}	9.2×10^{-3}	1.1×10^{-5}	NA	4.2×10^{-6}	6.3×10^{-8}	4.2×10^{-6}
	Noncarcinogenic	23	11	63	5.4×10^{-1}	NA	2.5×10^{-6}	1.4×10^{-4}	4.0×10^{-5}
Active Flyash Pile	Carcinogenic	8.4×10^{-5}	4.8×10^{-6}	5.7×10^{-6}	NA	NA	1.4×10^{-9}	7.7×10^{-9}	3.5×10^{-9}
	Noncarcinogenic	9.9×10^{-1}	4.5×10^{-1}	2.8	NA	NA	6.1×10^{-6}	1.5×10^{-5}	6.7×10^{-6}
Operable Unit 2-Wide	Carcinogenic	3.3×10^{-2}	NC[f]	NC	NC	NC	NC	NC	NC
	Noncarcinogenic	23	NC	NC	NC	NC	NC	NC	NC

[a]The carcinogenic risk value is the Incremental Lifetime Cancer Risk (ILCR) and the noncarcinogenic value is the Hazard Index (HI).

[b]RME - Reasonable Maximum Exposure

[c]CT - Central Tendency

[d]ND - Not determined because toxicity data not available.

[e]NA - The indicated receptor is not applicable to the waste subunit.

[f]NC - Not calculated

Source: Table 7-1, Operable Unit 2 RI Report.

South Field) exceeded 1.0 for the on-property resident farmer (adult and child) (RME and CT) due mostly to ingestion of total uranium in groundwater.

6.2 UNCERTAINTIES

Sources of uncertainty in the Operable Unit 2 Baseline Risk Assessment are discussed in Section B.4.3 of the Operable Unit 2 RI Report. Generally, uncertainty arises wherever imperfect information or understanding exist. In risk assessment, this typically is mitigated by making conservative assumptions for individual parameters. Significant uncertainty results for those particular pathways that required fate and transport modeling to support the assessment of exposure and, therefore, for the homegrown produce and beef and milk pathways. Such uncertainty was generated for the air and groundwater pathways of exposure. The high uncertainty must be recognized in the interpretation of risk from these media. Certain exposure pathways for a particular medium also tend to have higher or lower uncertainty depending on their assumptions. For example, incidental ingestion of soils by residents tends to have significantly less uncertainty than ingestion of fruits and vegetables, and meat and milk raised on contaminated soils. To assess these indirect exposure pathways, assumptions must be made regarding contaminant uptake from soil to plant and plant to livestock that are not required for the soil ingestion pathway. These assumptions contribute significant uncertainty to the risk estimates for these pathways.

The greatest uncertainty in the Operable Unit 2 Baseline Risk Assessment is associated with the assumptions made to estimate exposure point concentrations in groundwater, air, fruit and vegetables, and milk and beef for the assumed future receptors. These receptors include the on-property resident farmer and child and the off-property resident farmer and child. For the on-property RME farmer and home builder, the highest uncertainty is associated with the assumed future land use and potential exposure pathways. This receptor scenario was included in response to guidance, but the likelihood of occurrence within Operable Unit 2 is unknown. Uncertainty associated with the off-property resident farmer and child is primarily the result of surface water, groundwater, and air modeling used to support those scenarios. The modeling assumptions were conservative and therefore resulted in conservative estimates for the exposure point concentrations.

Taken together, the uncertainties identified with site data, exposure parameters, fate and transport modeling, toxicity assessment, and risk characterization are judged to be high (i.e., there is the potential to overestimate risk by two or more orders of magnitude).

6.3 BASELINE ECOLOGICAL RISK ASSESSMENT

The purpose of the ecological risk assessment, which was completed as a companion to the preliminary site-wide baseline risk assessment in the Site-Wide Characterization Report, was to estimate the potential and future baseline risks of FEMP contaminants to ecological receptors.

The EPA and DOE agreed in the Amended Consent Agreement (September 1991) that the Site-Wide Ecological Risk Assessment would be performed as part of the RI for Operable Unit 5. However, a qualitative evaluation of risks was performed for the Operable Unit 2 remedial action. Residual contaminant concentrations projected to remain following the implementation of the selected remedy were compared to benchmark values from Operable Unit 5 identified as being protective of ecological receptors. Concentrations were below benchmark values, indicating no adverse impact.

The Site-Wide Ecological Risk Assessment in the Operable Unit 5 RI Report quantitatively assesses the possible risks from current concentrations of site contaminants to ecological receptors inhabiting on-property and off-site areas not presently targeted for remediation based on human-health concerns. This section summarizes the results of the Site-Wide Ecological Risk Assessment from the Operable Unit 5 RI Report.

The ecological receptors potentially exposed to FEMP contaminants include all organisms, exclusive of humans and domestic animals. The ecological risk assessment focused on a group of indicator species selected to represent a variety of exposure pathways and trophic positions. Terrestrial vegetation was represented by a generic plant species. Terrestrial wildlife species to be evaluated were selected based on species abundance on the FEMP site, trophic level position, and habitat requirements. The species evaluated were the white-tailed deer (*Odocoileus virginianus*), white-footed mouse (*Peromyscus leucopus*), raccoon (*Procyon lotor*), red fox (*Vulpes fulva*), muskrat (*Ondatra zibethica*), American robin (*Turdus migratorius*), and red-tailed hawk (*Buesto jamaicensis*).

The assessment examined risks to terrestrial organisms associated with contaminants in two environmental media -- surface soils, summarized for the entire site, and surface water in Paddys Run from the northern boundary of the FEMP site to the confluence with the storm sewer outfall ditch. Risks to aquatic organisms were evaluated for exposure to contaminants in Paddys Run, the Great Miami River, and in runoff into the storm sewer outfall ditch. All nonradioactive and radioactive constituents of greatest human health risk were considered to be of concern for the ecological risk

assessment. Estimated ecological risks associated with exposure to FEMP site COCs are primarily due to nonradioactive inorganic chemicals in soils, rather than to organic chemicals or radionuclides. This is true for both terrestrial and aquatic organisms and for plants as well as wildlife. In particular, estimated intakes of arsenic, cobalt, lead, and silver from FEMP soils were all higher than the estimated NOAELs for at least six of the seven indicator species selected for this assessment. The relative hazards to individual species varied, but the white-footed mouse consistently had the highest indices of these chemicals. This can be attributed to the assumed intake by the mouse of insects (using earthworms as surrogates), which in turn were assumed to assimilate chemicals from soil with a transfer coefficient of 1.0.

Estimated hazards to terrestrial organisms of exposure to COCs in FEMP surface waters were relatively low, with HIs greater than 1.0 only for arsenic, lead, molybdenum, and silver. These chemicals presented hazards of two, five, four, and three to species, respectively, and the highest HI estimated was for lead intake by the mouse.

Estimated doses to terrestrial organisms at the FEMP site, originating from soil uptake by plants and earthworms, were below levels expected to cause detectable effects. However, as with inorganic chemicals, this conclusion is sensitive to assumptions about muscle-to-muscle transfer of radionuclides. If perfect transfer or biomagnification of uranium occurs (i.e., transfer factor equals 1.0), it could expose terrestrial wildlife at the FEMP to potentially harmful radiation levels. However, if more realistic muscle-to-muscle transfer coefficient were assumed (i.e., 0.1), the estimated radiation doses would fall below the range likely to result in harmful effects. Radiation doses due to water intake were insignificant.

Exposure to radiological contaminants does not appear to pose a significant risk to aquatic organisms at the measured concentrations in the surface waters and sediments impacted by the FEMP site. However, modeled concentrations of radionuclides in runoff from the FEMP site into surface water would cause estimated exposures to exceed the upper limit of 1 rad/day. A chronic dose rate of 1 rad/day or $3.65 \times 10^{+5}$ mrad/year, or less, to the maximally exposed member of a population of aquatic organisms would ensure that there were no deleterious effects from radiation on the population. The most affected organisms would be aquatic plants, receiving a total dose from internal and external exposure of about 140 rad/day. The total dose to fish is minimally over the limit, at 1.6 rad/day, and the total dose to benthic macroinvertebrates is about 14 rad/day. The maximum

concentrations calculated in the storm sewer outfall ditch were used in source runoff calculations. Doses to aquatic organisms in the storm sewer outfall ditch may exceed the limit of 1 rad/day. Doses in Paddys Run and the Great Miami River would be lower than that indicated in the storm sewer outfall ditch and would be well below 1 rad/day. The measured concentrations of cadmium in Paddys Run and the Great Miami River; copper in the Great Miami River; mercury in Paddys Run, the Great Miami River, and the storm sewer outfall ditch; and silver in Paddys Run water exceeded chronic toxicity criteria for the protection of freshwater organisms.

Field studies on the impact of the FEMP site on terrestrial and aquatic communities do not indicate any effects consistent with contaminant impacts except for above-background levels of arsenic and mercury recorded in RI/FS plant samples. In addition, although potential impacts at the individual level were predicted for wildlife species, detrimental or adverse impacts have not been observed in the field. This suggests that the potential exposures predicted by modeling may not occur in the field or that the resulting potential effects as a result of exposures may not occur. A comparison of the concentrations of inorganic chemical concentrations in FEMP soils to regional background values indicate the mean FEMP concentrations may be similar to the 95 percent UCLs of background values. This indication suggests that ecological risks estimated using background values of inorganics would be comparable to those estimated for the FEMP site, and emphasizes the conservative nature of the method used.

In summary, although radionuclides are the most ubiquitous contaminants at the FEMP, estimated ecological risks to both terrestrial and aquatic organisms are primarily associated with nonradioactive inorganic chemicals. Although estimated risks are substantial in some instances, they are based on soil inorganic chemical concentrations comparable to background levels, and deleterious effects have not been observed in the field. This suggests that current FEMP site-specific ecological risks are low. However, remedial actions are appropriate to address contaminants which have potential to cause harm in the future.

6.4 CONCLUSION

The results of the Operable Unit 2 Baseline Risk Assessment demonstrate that current and future risks and hazards from the Operable Unit 2 subunits will exceed the EPA acceptable carcinogenic risk range of $1x10^{-4}$ to $1x10^{-6}$ and the acceptable noncarcinogenic hazard limit of 1.0. Therefore, actual or threatened releases of hazardous substances from this site, if not addressed by implementing the

response action selected in this ROD, may present a current or potential threat to public health, welfare, or the environment.

7.0 DESCRIPTION OF ALTERNATIVES

This section identifies and provides a description of each of the remedial action alternatives studied in the detailed analysis phase of the Operable Unit 2 FS. Remedial alternatives for Operable Unit 2 were developed by examining available technologies for cleanup that were potentially applicable to the contaminated materials within the subunits. The FS initially evaluated eight remedial alternatives against three general criteria: effectiveness, implementability, and cost. Based on this screening, the four alternatives discussed in this section were selected for detailed analysis; the alternatives retain the original numbering. For more in-depth information on remedial alternatives, refer to the Operable Unit 2 FS Report. Information on the environmental impacts associated with each alternative can be found in Table 8-2.

7.1 Alternative 1: No Action

The no action alternative is retained throughout the FS process as required by the NCP [40 CFR §300.430(e)(6)]. This alternative provides a baseline against which other alternatives can be evaluated. Under this alternative, no remedial action would be taken, and the material would be left "as is," without the implementation of any containment, removal, treatment, or other mitigating actions. This alternative would not reduce the toxicity, mobility, or volume of contamination at the site. In addition, this alternative would not provide monitoring of soil or groundwater, nor would it provide access restrictions to limit exposure to the waste material.

7.2 Alternative 2: Consolidation and Capping

Alternative 2 includes consolidation of material within or near each of the subunits. A composite cap is then constructed over the waste materials.

At the Solid Waste Landfill, material along the south side of the landfill would be removed to allow placement of a proper foundation for the capping system adjacent to the railroad track. Also, material close to a sand layer in the southeast corner of the landfill would be excavated and would be replaced by clean clay to halt the migration of contaminants into the sand layer. Material in the northeast corner of the landfill would be consolidated toward the center of the subunit to simplify the design geometry and construction of the cap.

At the North Lime Sludge Pond, free-standing water would be pumped to the Advanced Wastewater Treatment (AWWT) facility for treatment and discharge to the Great Miami River. This would not be necessary for the South Lime Sludge Pond. The top 3 feet of lime sludge in both ponds would then be stabilized in place by mixing with flyash and/or cement to support the cap. The existing K-65 Slurry Line Trench, located south of the Lime Sludge Ponds, would be removed in conjunction with the consolidation activities. The trench and piping material would be moved to the staging/material preparation area, processed for size reduction, and placed within the limits of the consolidation area. The slurry line trench, which holds electrical conduits and utility lines that are still utilized at the site, would be reconstructed in the area south of the consolidation area. This activity would be done to allow placement of a proper foundation for the capping system.

At the Inactive Flyash Pile, South Field, and Active Flyash Pile, waste material with COCs above the cleanup levels that is directly over the Great Miami Aquifer or that is in an area where there is limited natural soil protecting the aquifer (less than 16 feet) would be excavated. This material would be moved to the northeast area of the South Field where the depth of natural soil is at least 16 feet thick. All existing waste material within the floodplain (portions of the Inactive Flyash Pile and South Field) would be excavated and consolidated in the northeast portion of the South Field. Prior to the actual excavation and movement of this material, the area in the northeast of the South Field would be graded, compacted, and covered with a drainage layer of gravel.

Soil containing lead from the Firing Range, which is assumed to be mixed waste, would be excavated, treated, packaged, and transported to an off-site facility for disposal. The quantity of soils requiring off-site disposal is estimated at 300 cubic yards. Firing Range material surrounding the area with bullets that is not found to be hazardous after testing would be managed with the other South Field material.

Sands under the Inactive Flyash Pile/South Field area serve as a lateral pathway by which perched groundwater and leachate from the consolidated waste may enter the Great Miami Aquifer. During the excavation and consolidation of the materials at the Inactive Flyash Pile, South Field, and Active Flyash Pile, a subsurface drain would be constructed along the southwestern and southeastern sides of the consolidation area to collect groundwater from the perched aquifer underlying the area and to collect drainage from the gravel layer constructed prior to placement of the consolidated material. The subsurface drain would discharge by gravity into a pumping station. Collected leachate/

groundwater would be pumped to the AWWT facility for treatment and discharge to the Great Miami River. Construction water in the subunit areas would be collected, as required, to maintain a dry excavation and transferred to the AWWT facility for treatment and discharge to the Great Miami River.

Following the completion of consolidation activities at each subunit, excavated areas would be backfilled, as necessary, with clean material and the entire consolidation area at each subunit would be graded to blend with the surrounding topography. The consolidation operation for the subunits would be coordinated with the remedial actions associated with Operable Units 1, 3, 4, and 5.

This alternative would include federal ownership of the FEMP with access restrictions (fencing) and
No. 25 groundwater monitoring as institutional controls at each of the consolidated areas. ~~Restrictions to the use of the property would be noted on the property deed before the property is sold or transferred to another party.~~

- Years to implement: 4.25
- Residual risk: 1.2×10^{-6}
- Residual hazard: 1.3×10^{-1}
- Present worth cost: $69.6 million
- Quantity of waste to be handled: 251,400 cubic yards

7.3 Alternative 3: Excavation and Off-Site Disposal

Alternative 3 includes excavation of all materials with COC concentrations above the cleanup levels, material processing for size reduction and moisture control (if required), and off-site disposal.

At the North Lime Sludge Pond, free-standing water would be pumped to the AWWT facility for treatment and discharge to the Great Miami River. The lime sludge from both ponds would then be excavated and dried, as necessary, to meet the waste acceptance criteria for the off-site disposal facility.

Debris (e.g., concrete, drums, steel, pallets, etc.) from all subunits would be visually segregated, moved to the staging/material preparation area, processed for size reduction if required, placed in containers, and shipped to an off-site disposal facility. Soil and other wastes (i.e., flyash and lime sludge) would be placed directly in containers suitable for shipment by rail or truck and transported to an off-site disposal facility. An off-site disposal facility has not yet been chosen, however,

Envirocare in Clive, Utah was used as a representative off-site disposal facility for purposes of the cost estimate.

Soil containing lead from the Firing Range, which is assumed to be mixed waste, would be excavated, treated, packaged, and transported to an off-site facility for disposal. The quantity of soils requiring off-site disposal is estimated to be 300 cubic yards. Firing Range material surrounding the area with bullets that is not found to be hazardous after testing would be managed with the other South Field material.

Excavation would be completed to the required depth established by computer modeling to remove materials with COC concentrations above the cleanup levels. Upon reaching this predetermined depth, verification sampling and testing would be completed to confirm that all material with COC concentrations above their respective cleanup levels has been removed. If the results of the verification sampling/testing indicate that contamination above cleanup levels remains, then excavation and verification sampling would be performed until acceptable test results are obtained. The
No. 24 remaining ~~clean~~ soil would either be graded to blend in with the surrounding topography, or utilized for on-going construction activities at the FEMP. Excavation operations would be coordinated with the remedial actions associated with Operable Units 1, 3, 4, and 5.

Construction water in the subunit areas would be collected, as required, to maintain a dry excavation, and transferred to the AWWT facility for treatment and discharge to the Great Miami River.

This alternative would include federal ownership of the FEMP with access restrictions (fencing) and
No. 25 groundwater monitoring as institutional controls at each subunit. ~~Restrictions to the use of the property would be noted on the property deed before the property is sold or transferred to another party.~~

- Years to implement: 4.25
- Residual risk: 2.5×10^{-6}
- Residual hazard: 2.0×10^{-2}
- Present worth cost: $212.8 million
- Quantity of waste to be handled: 314,700 cubic yards

7.4 Alternative 6: Excavation and On-Site Disposal with Off-Site Disposal of Fraction Exceeding Waste Acceptance Criteria

Alternative 6 includes excavation of all soils with COCs above the cleanup levels, material processing for size reduction and moisture control if required, on-site disposal in an engineered disposal facility, and off-site disposal of a small fraction of the excavated material that exceeds the maximum waste acceptance criteria of the on-site disposal facility. The maximum waste acceptance criteria is ~~360~~ 346 pCi/g of uranium-238, or ~~1,080~~ 1,030 ppm of total uranium. Appendix E.2 of the Operable Unit 2 FS Report presents the details of how this waste acceptance criteria was determined.

No. 1

At the North Lime Sludge Pond, free-standing water would be pumped to the AWWT facility for treatment and discharge to the Great Miami River. This would not be necessary for the South Lime Sludge Pond. The lime sludge from both ponds would then be excavated and dried, as necessary, before on-site disposal.

Debris (e.g., concrete, drums, steel, pallets, etc.) from all subunits would be visually segregated, moved to the staging/material preparation area, processed for size reduction if required, and placed in the on-site disposal facility. The remaining contaminated materials from the subunits would be excavated, as described below, and placed in the on-site disposal facility.

It is estimated that up to 3,100 cubic yards of material from Operable Unit 2 would not meet the waste acceptance criteria for on-site disposal. This is approximately one percent of the total amount of waste material that would be excavated. This material would be packaged in containers suitable for shipment by rail or truck and transported to an off-site disposal facility. An off-site disposal facility has not yet been chosen, however, Envirocare in Clive, Utah was used as a representative off-site disposal facility for purposes of the cost estimate.

Soil containing lead from the Firing Range, which is assumed to be mixed waste, would be excavated, treated, packaged, and transported to an off-site facility for disposal. The quantity of soils requiring disposal is estimated to be 300 cubic yards. Firing Range material surrounding the area with bullets that is not found to be hazardous after testing would be managed with the other South Field material.

Excavation would be completed to the required depth established by computer modeling to remove materials with COC concentrations above the cleanup levels. Upon reaching this predetermined depth, verification sampling and testing would be completed to confirm that all material with COC concentrations above their respective cleanup levels had been removed. If the results of the verification sampling/testing indicate that contamination above cleanup levels remains, then additional excavation and verification sampling would be performed until acceptable test results are obtained. No. 24 The remaining ~~clean~~ soil would either be graded to blend in with the surrounding topography, or utilized for on-going construction activities at the FEMP. The excavation/disposal operation for the Operable Unit 2 subunits would be coordinated with the remedial operations associated with Operable Unit 3 and Operable Unit 5. Long-term monitoring would be performed at each subunit to monitor groundwater and surface water to ensure that any material with concentrations below cleanup levels that is left in place causes no adverse effects.

Figure 7-1 depicts the limits of the potentially acceptable region for the location of the on-site disposal facility. The geology of the disposal facility location identified in the figure in combination with the engineering controls will be protective of human health and the environment, based on a series of soil borings made in the area. However, the disposal facility location is subject to review and approval during the remedial design phase. DOE intends to construct only one disposal facility at the FEMP. Therefore, should on-site disposal be selected for other Fernald operable units, the disposal facility capacity and location could be adjusted accordingly during the remedial design process. Figure 7-2 depicts a cross-section of the proposed cap and liner system for the on-site disposal facility.

Construction water in the subunit areas and from the on-site disposal facility construction location would be collected, as required, to maintain a dry excavation, and transferred to the AWWT facility for treatment and discharge to the Great Miami River.

This alternative would include federal ownership of the FEMP with access restrictions (fencing) and groundwater monitoring as institutional controls at the subunits and on-site disposal facility. Cap No. 25 maintenance would also be performed at the on-site disposal facility. ~~Restrictions to the use of the property would be noted on the property deed before the property is sold or transferred to another party.~~

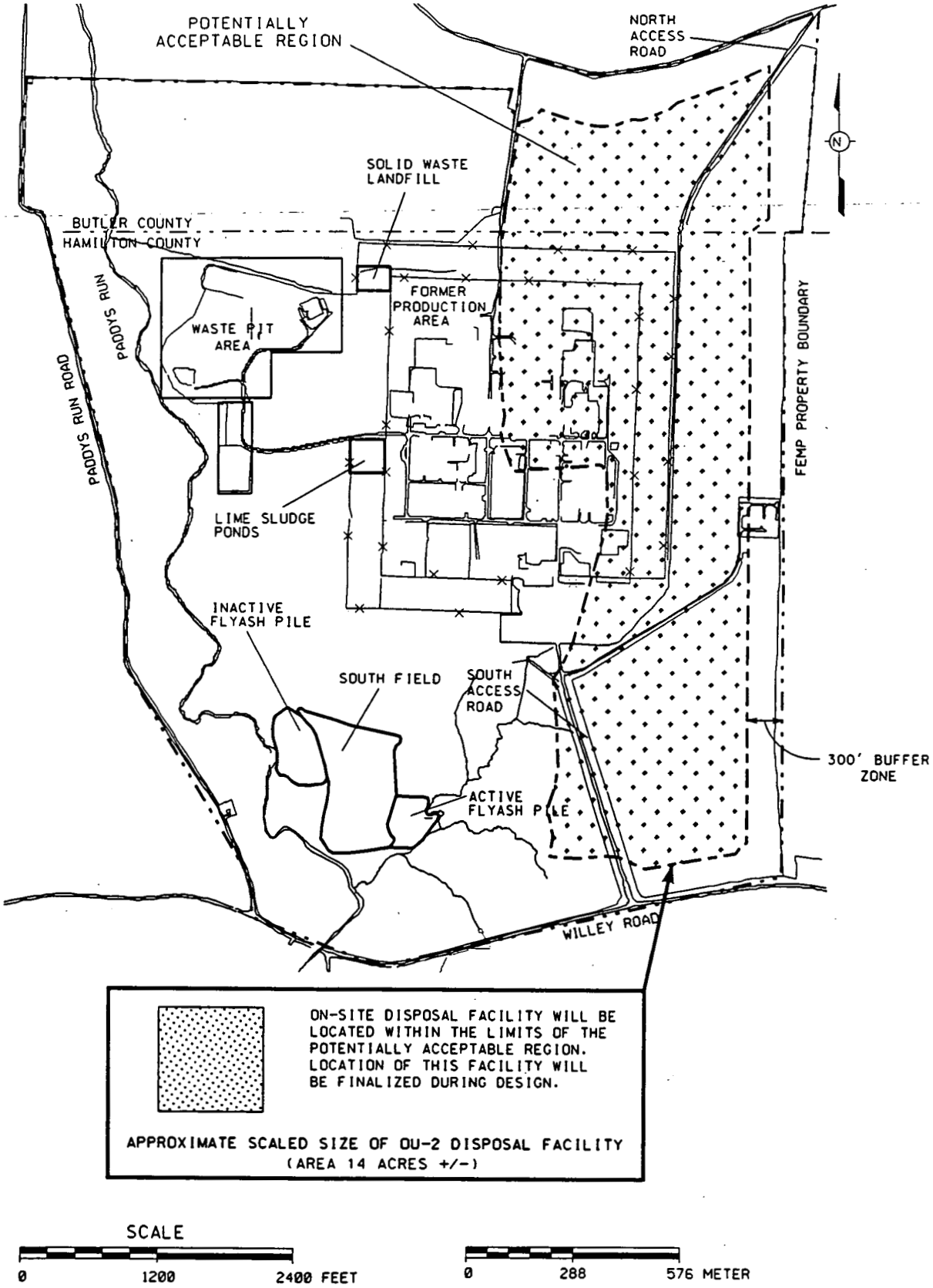

FIGURE 7-1
SITE PLAN
POTENTIALLY ACCEPTABLE REGION
FOR OPERABLE UNIT 2 ON-SITE DISPOSAL FACILITY

rod044

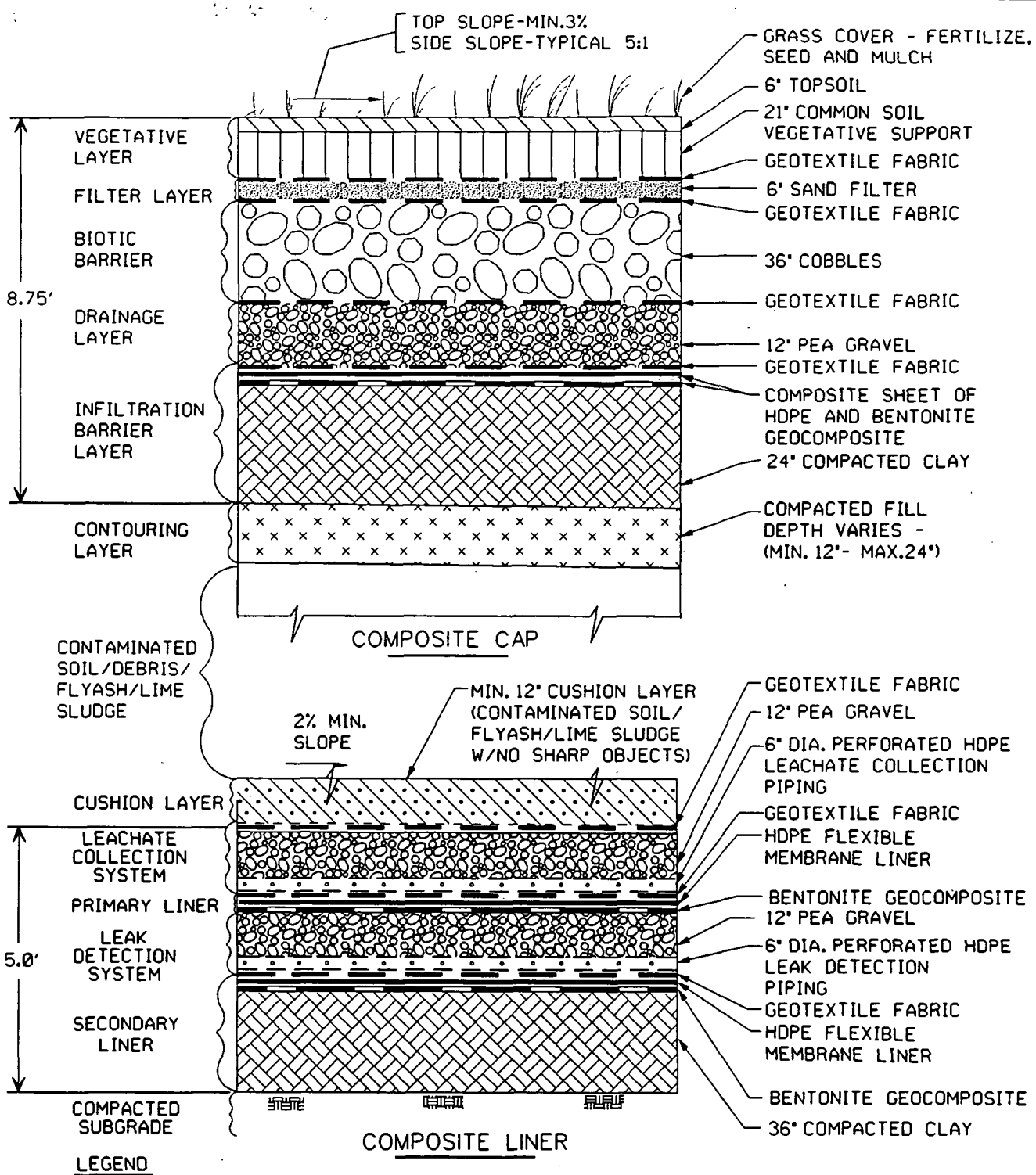

FIGURE 7-2
TYPICAL DETAIL
COMPOSITE CAP AND LINER
(NOT TO SCALE)

rod0450.dgn

- Years to implement: 4.25
- Residual risk: 2.5×10^{-6}
- Residual hazard: 2.0×10^{-2}
- Present worth cost: $105.9 million
- Quantity of waste to be handled: 314,700 cubic yards

7.5 MAJOR ARARS FOR OPERABLE UNIT 2

CERCLA §121(d)(2) directs that for wastes left on site, remedial actions must comply with federal and state environmental laws that are legally applicable or are relevant and appropriate under the circumstances of the release or potential release. According to CERCLA §121(e)(1), no federal, state, or local permits are required for the portion of any removal or remedial action conducted entirely on site. Off-site actions must comply with all requirements that are applicable, including permit requirements. This section discusses the ARARs for Operable Unit 2. The list of major ARARs is attached to this Record of Decision as Appendix A.

ARARs are defined as follows:

- Applicable requirements are cleanup standards, standards of control, and other substantive environmental protection requirements, criteria, or limitations promulgated under federal or state law that specifically address a hazardous substance, pollutant, contaminant, remedial action, location, or other circumstance at a CERCLA site.

- Relevant and appropriate requirements are cleanup standards, standards of control, and other substantive environmental protection requirements, criteria, or limitations promulgated under federal or state law that, while not "applicable" to a hazardous substance, pollutant, contaminant, remedial action, location, or other circumstance at a CERCLA site, address problems or situations sufficiently similar to those encountered at the CERCLA site that their use is well suited to the particular site.

- To Be Considered (TBC) criteria is a category that includes non-promulgated criteria, advisories, and guidance issued by federal or state government that are not legally binding and do not have the status of potential ARARs. However, pertinent TBCs will be considered along with the ARARs in determining the necessary level of cleanup or technology requirements.

EPA has identified three categories of ARARs:

- Chemical-specific ARARs are usually health- or risk-based numerical values or methodologies used to determine acceptable concentrations of chemicals that may be found in or discharged to the environment [e.g., maximum contaminant levels (MCLs) that establish safe levels in drinking water].

- Action-specific ARARs are usually technology- or activity-based requirements or limitations on actions or conditions involving special substances.

- Location-specific ARARs restrict actions or contaminant concentrations in certain environmentally sensitive areas. Examples of areas regulated under various federal laws include floodplains, wetlands, and locations where endangered species or historically significant cultural resources are present.

Sources of Operable Unit 2 ARARs are federal and state laws, regulations, and guidance and DOE Orders that address the site-specific circumstances in Operable Unit 2.

7.5.1 No Action Alternative

There are no major ARARs for the no action alternative. A no-action decision can only be made when no remedial action is necessary because the site is already protective of human health and the environment.

7.5.2 Chemical-Specific ARARs/TBCs

All Operable Unit 2 remedial alternatives must meet the chemical-specific ARARs associated with potential releases to air, surface water, groundwater, and penetrating radiation. These ARARs include federal and any more stringent state non-zero maximum contaminant level goals (MCLGs) and MCLs for drinking water; the Ohio Water Quality Criteria for surface water; EPA limits for radionuclide air emissions; National Ambient Air Quality Standards and the Ohio Air Toxic Policy for air pollution; and DOE dose limits for exposure to radioactivity.

7.5.3 Action-Specific ARARs/TBCs

Alternatives proposing that remediation waste remain on site would have a number of action-specific requirements that must be met. These requirements would depend on type of disposal (i.e., consolidation/ containment or at an engineered on-site disposal facility) and classification of the remediation waste. The requirements include EPA regulations and DOE Orders governing the management and disposal of low-level radioactive waste/residual radioactive material and OEPA regulations for the disposal of solid waste. Specific layers of the cap and liner systems of the disposal facility and the duration of protection are specified in the action-specific requirements. If different regulatory types of remediation wastes are disposed of together in a facility, the most stringent technical requirements would be met.

7.5.4 Location-Specific ARARs/TBCs

Along with the action-specific requirements for waste disposal, there are a number of location-specific ARARs. The protection of endangered species, cultural resources, floodplains, and wetlands is required by federal and state regulations. Part of the Inactive Flyash Pile and South Field are located in a 100- and 500-year floodplain area but the remedial alternatives will not adversely impact this floodplain. A small area of wetlands is located north of the Solid Waste Landfill. During remediation, contaminated sediments may be removed from the area, thus impacting the wetland. Wetlands in other areas of the site may also be impacted by construction and operation of the on-site disposal facility. This action will be performed in accordance with the Clean Water Act (Section 404 and applicable regulations) and a DOE NEPA assessment [10 CFR §1022] was performed to minimize impacts to floodplains and wetlands.

The most significant issue influencing the location-specific ARARs is the determination by EPA Region V (53 Federal Register 25670) that the buried valley aquifer system of the Great Miami/Little Miami Rivers of southwestern Ohio (Great Miami Aquifer) is a sole or principal source of drinking water and that contamination of this aquifer would create a significant hazard to the public health. The determination was effective July 8, 1988. The Federal Safe Drinking Water Act requires all federally-funded projects to undergo a review to ensure that the project will not adversely impact a sole source of drinking water.

OEPA has established solid waste siting criteria that prohibit locating a new solid waste landfill over a sole-source aquifer [Ohio Administrative Code (OAC) 3745-27-07(H)(2)(c)]. OEPA has also established that a new solid waste disposal facility may not be located above an unconsolidated aquifer capable of sustaining a yield of 100 gallons per minute for a 24 hour period [OAC 3745-27-07 (H)(2)(d)]. The Great Miami Aquifer qualifies as both a sole-source aquifer and a 100-gallon-per-minute-yield aquifer.

Ohio Revised Code (ORC) 3734.02(G) allows exemptions to requirements identified in the regulations for obtaining a permit or license. These exemptions must be based on a determination that the exemption would be unlikely to adversely affect public health or safety or the environment.

OEPA has established two specific policies [GD0202.101 and GD0202.102] that identify conditions that would be acceptable to allow an exemption to the two cited rules. While these policies state that several factors will be considered in evaluating an exemption, the specific factors identified indicate

that the protection of human health and the environment should be provided solely by the existing hydrogeologic conditions. This has been reaffirmed by OEPA in several meetings.

The primary hydrogeologic standards established by these policies are:

- Significant thickness of low permeable material between the disposal facility and the aquifer
- Lack of inter-connection between the sole-source aquifer and any significant zones of saturation
- Significant amount of sediment [soil] between the disposal facility and the high-yield aquifer to prevent leachate from migrating to the high-yield aquifer during the life of the landfill and the post-closure care period. The post-closure care period for a solid waste landfill is a minimum of 30 years [OAC 3745-27-14(A)].

It has been determined, based on existing hydrogeologic information, that the existing hydrogeologic conditions at the FEMP do not fully meet these conditions. This is based on the possibility that some granular soils are interbedded in the till and the need to protect the aquifer for significantly longer than 30 years [at least for 200 years; an ARAR under 40 CFR 192].

The existing geologic information is based on borings within the boundaries of the on-site area determined to exhibit the best hydrogeologic conditions. The current definition for the on-site area with the best hydrogeologic conditions is where 12 feet or more of gray clay would exist between the bottom of a proposed engineered disposal facility and the aquifer. A pre-design investigation has been initiated to establish the best location for a disposal facility in this identified area. The objective is to locate the disposal facility footprint where there is the greatest amount of gray clay and the least amount of interbedded granular material. The pre-design investigation will also obtain site-specific field information to verify the modeling parameters that demonstrated the protection of human health and the environment (i.e., protection of the aquifer).

Based on the pre-design investigations, DOE will determine what additional engineering controls beyond these required by the OEPA solid waste landfill regulations are necessary to protect the aquifer. The resulting combination of hydrogeologic conditions and engineering controls will provide protection of human health and the environment.

This combination meets the criteria for an EPA waiver of the identified OEPA ARARs based on an equivalent standard of performance. The preamble to the NCP [55 Federal Register 8748] directs that for a CERCLA waiver of ARARs based on the equivalent standard of performance, the following factors need to be considered: degree of protection, level of performance, reliability into the future, and the time required for results.

EPA further directs that the purpose of the waiver is for the use of alternative but equivalent technologies, methods or approaches and that a comparison based on risk is only permitted where the original standard is risk based. ORC 3734.02(G) and the supporting policies can be interpreted to be based on a combination of method (i.e., performance) and risk. Therefore, a discussion addressing the equivalency of the selected alternative to the OEPA standards based on performance and risk will be provided in Section 10.2.3.

A feasible location for the on-site disposal facility and the necessary engineering controls to meet the equivalent standard of performance to protect human health and the high-yield sole-source aquifer are addressed in Section 5.0 of the Operable Unit 2 FS Report. The specific design of the engineering controls and location of the disposal facility would be finalized during the remedial design process.

8.0 SUMMARY OF THE COMPARATIVE ANALYSIS OF ALTERNATIVES

Section 8.0 profiles the basis for evaluating the relative performance of the alternatives with respect to the nine EPA evaluation criteria, noting how the preferred alternative compares to the other alternatives under consideration. The following are the EPA evaluation criteria:

1. **Overall Protection of Human Health and Environment** addresses whether or not a remedy provides adequate protection and describes how risks posed through each pathway are eliminated, reduced, or controlled through treatment engineering controls or institutional controls.

2. **Compliance with ARARs** addresses whether or not a remedy will meet all of the applicable or relevant and appropriate requirements of other Federal and State environmental statutes and/or provide grounds for invoking a waiver.

3. **Long-Term Effectiveness and Permanence** refers to the magnitude of residual risk and the ability of a remedy to maintain reliable protection of human health and the environment over time once cleanup goals have been met.

4. **Reduction of Toxicity, Mobility, or Volume Through Treatment** is the anticipated performance of the treatment technologies that may be employed in a remedy.

5. **Short-Term Effectiveness** refers to the speed with which the remedy achieves protection, as well as the remedy's potential to create adverse impacts on human health and the environment that may result during the construction and implementation period.

6. **Implementability** is the technical and administrative feasibility of a remedy, including the availability of materials and services needed to implement the chosen solution.

7. **Cost** includes capital and operation and maintenance costs.

8. **State Acceptance** indicates whether, based on its review of the RI/FS and Proposed Plan, the State concurs with, opposes, or has no comment on the preferred remedial alternative.

9. **Community Acceptance** will be assessed in the ROD following a review of the public comments received on the RI/FS reports and the Proposed Plan.

The nine criteria are categorized into three groups: threshold criteria, primary balancing criteria, and modifying criteria. The first two criteria, overall protection of human health and the environment and compliance with ARARs, are the threshold criteria that must be satisfied in order for an alternative to be eligible for selection as the preferred remedial alternative. Criteria three through seven are the primary balancing criteria that are used to weigh major trade-offs among alternatives. State and

community acceptance are the modifying criteria that are taken into account after public comment is received on the Proposed Plan.

8.1 COMPARATIVE ANALYSIS OF ALTERNATIVES

The following section summarizes the information presented in Section 6.0 of the Operable Unit 2 FS Report for Operable Unit 2, and relies upon the detailed analysis of alternatives presented in Section 5.0 of the same report.

The following are the remedial alternatives that underwent detailed analysis (the preferred remedial alternative is underlined):

Alternative 1	No Action
Alternative 2	Consolidation and Capping
Alternative 3	Excavation and Off-Site Disposal
Alternative 6	Excavation and On-Site Disposal with Off-Site Disposal of Fraction Exceeding Waste Acceptance Criteria

Table 8-1 provides a summarized comparative analysis of alternatives for Operable Unit 2.

8.1.1 Overall Protection of Human Health and the Environment

Alternative 1, No Action, would not be protective of human health and the environment because no remedial activities would be conducted. The Baseline Risk Assessment for Operable Unit 2 concludes that, without remediation, Operable Unit 2 presents potentially unacceptable risks to human health and the environment.

The remaining alternatives, collectively referred to as "action alternatives", would provide long-term protectiveness. For Alternative 3, Excavation and Off-Site Disposal, protectiveness would be obtained by removal of the contaminated materials to cleanup levels. The material would then be transported to an off-site disposal facility.

Alternative 6, Excavation and On-Site Disposal with Off-Site Disposal of Fraction Exceeding Waste Acceptance Criteria, would provide protectiveness by the removal of the contaminated material to cleanup levels. Protectiveness would be maintained through disposal of the removed material in an engineered on-site disposal facility. The facility would utilize engineering design to preclude human

TABLE 8-1

SUMMARY OF COMPARATIVE ANALYSIS OF REMEDIAL ALTERNATIVES OPERABLE UNIT 2

Alternative	Threshold Criteria		Primary Balancing Criteria				
	Overall Protection of Human Health and the Environment	Compliance with ARARs	Long-Term Effectiveness and Permanence	Reduction of Toxicity, Mobility, or Volume Through Treatment	Short-Term Effectiveness	Implementability	Present Worth Cost ($millions)
1 - No Action	Not protective	ARARs not applicable	Not effective or permanent	No treatment	Highly effective; no risks	None	0
2 - Consolidation and Capping	Protective	Complies with all ARARs	Effective, with concerns over permanence because of inability to monitor leaks	Minimal treatment (Firing Range soil) so no significant effect on toxicity, mobility, or volume	Effective - minimal risk to community and workers	Reliable technology; administratively easy to implement	69.6
3 - Excavation and Off-Site Disposal	Protective	Complies with all ARARs	Highly effective and permanent	Minimal treatment (Firing Range soil) so no significant effect on toxicity, mobility or volume	Effective - moderate risk to community and workers	Reliable technology; administratively possible to implement, but may be time consuming to obtain necessary permits and approvals	212.8
6 - Excavation and On-Site Disposal with Off-Site Disposal of Fraction Exceeding Waste Acceptance Criteria	Protective	Requires EPA waiver from OEPA prohibition on siting a disposal facility above a high-yield sole-source aquifer; waiver is based on achieving a standard of equivalent performance; complies with all other ARARs	Effective and permanent	Minimal treatment (Firing Range soil) so no net effect on toxicity, mobility or volume	Effective - moderate risk to workers, minimal risk to community	Reliable technology; administratively implementable	105.9

Source: Table 6-2, Operable Unit 2 FS Report.

000106

6793
FEMP-OU02-4 DRAFT
April 8, 1995

and ecological contact with the contaminated material. The facility would also be designed so that it would not pose unacceptable impacts to the Great Miami Aquifer.

Alternative 2, Consolidation and Capping, would provide protection by consolidating the contaminated material in three areas, capping this material, and installing a subsurface drainage system in the South Field area. These measures would eliminate direct contact, reduce exposure to an acceptable level, and mitigate the potential migration of contaminants to the Great Miami Aquifer. This alternative would not be protective of the on-property resident farmer. Therefore, continued federal ownership with access restrictions would be required. Assessing the effectiveness of the containment systems is only possible by monitoring the groundwater around the consolidation areas. This uncertainty would be minimized by regular inspection and maintenance of the capping systems.

8.1.2 Compliance with ARARs

Except for Alternative 1, each of the Operable Unit 2 remedial alternatives would either comply with the chemical-, action-, and location-specific ARARs, or meet the requirements for an ARAR waiver from the EPA. ARARs are not pertinent to Alternative 1, the No Action alternative, since no remediation activities would occur.

Alternative 6, On-Site Disposal with Off-Site Disposal of Fraction Exceeding Waste Acceptance Criteria, would meet the location-specific ARARs with an ARAR waiver of one requirement. To protect human health and the environment, OEPA regulations have established that new solid waste disposal facilities should not be constructed over a sole source aquifer or aquifers that yield greater than 100 gallons per minute. Because the Great Miami Aquifer that underlies the FEMP is a sole-source aquifer and yields more than 100 gallons per minute, a waiver was requested to locate an on-site solid waste disposal facility on the FEMP. EPA allows waivers to ARARs if a standard of equivalent performance is attained. In this case, a waiver is justified because the combination of the existing hydrogeology at the proposed location and the engineering controls of the disposal facility would be equivalent to the hydrogeologic criteria established by OEPA for an exemption to the prohibition of siting a new solid waste disposal facility over a high-yield sole-source aquifer. Additional information on the waiver is provided in Sections 7.5.4 and 10.2.3.

8.1.3 Long-Term Effectiveness and Permanence

Alternative 1, No Action, would not provide long-term effectiveness since no remedial activities would occur. The Operable Unit 2 Baseline Risk Assessment concludes that without remediation, Operable Unit 2 presents unacceptable risks to human health and the environment.

Alternative 3, Excavation and Off-Site Disposal, would provide the most effective long-term protection of human health and the environment since contaminated material would be excavated and disposed of at an approved off-site disposal facility.

Alternative 6, Excavation and On-Site Disposal with Off-Site Disposal of Fraction Exceeding Waste Acceptance Criteria, would include disposal of contaminated material at an on-site, engineered disposal facility. This disposal facility would restrict access to the contaminated material and mitigate the potential for exposure. The disposal facility, unlike capping the waste, would be able to collect leachate that may migrate from the waste by the liner/leachate collection system, and monitor leaks before they reach the groundwater. The liner system would provide additional protectiveness against future impact to the Great Miami Aquifer. In addition, by combining all remediation waste into one disposal location, Alternative 6 also allows increased flexibility in land use options, a reduced buffer area, and centralized operations and maintenance. The long-term effectiveness of the facility would be ensured by federal ownership with access restrictions.

Alternative 2, Consolidation and Capping, would entail consolidation of contaminated material to provide protection of the Great Miami Aquifer and to facilitate construction of the capping system. A capping system would be installed which will restrict access to the contaminated material and mitigate the potential for exposure. A subsurface drainage system would be constructed in the South Field area to provide extra protection to the Great Miami Aquifer. However, none of the systems would include a composite liner with leachate collection and leak detection layers. Continued protectiveness of the cap system would require long term maintenance of the facility and groundwater monitoring around the subunits. Federal ownership of those areas with access restrictions would be required to maintain the long-term effectiveness of the remedy.

Table 8-2 summarizes the long-term impacts on the environment from the Operable Unit 2 remedial alternatives.

TABLE 8-2

SUMMARY OF LONG-TERM AND SHORT-TERM ENVIRONMENTAL IMPACTS FOR OPERABLE UNIT 2

Areas of Impact	Long Term				Short Term			
	Alternative 1	Alternative 2	Alternative 3	Alternative 6	Alternative 1	Alternative 2	Alternative 3	Alternative 6
Soil and Geology	No impact	16.3 ac[a] committed[b] to containment	16.1 ac committed at off-site disposal facility	23 ac committed to on-site disposal facility	No impact	35 ac disturbed	60 ac disturbed	75 ac disturbed
Water Quality and Hydrology	Continued migration of contaminants to surface and groundwater	No impact	No impact	No impact	Continued migration of contaminants to surface and groundwater	Minimal impact, assuming controls	Minimal impact, assuming controls	Minimal impact, assuming controls
Air Quality	Potential release to ambient air	No impact	No impact	No impact	Potential release to ambient air	Fugitive dust emissions	Fugitive dust emissions	Fugitive dust emissions
Biotic Resources	Potential release to ecological receptors	Loss of 2 ac managed grassland, 13.8 ac introduced grassland/leased pasture and old field, 6.4 ac early/mid-successional and riparian woodlands,[c] 10 ac pine plantation, and 0.2 ac wetlands habitat	Loss of 13.8 ac introduced grassland/leased pasture and old field, 6.4 ac early/mid-successional and riparian woodlands, and 0.2 ac wetlands habitat	Loss of 49 ac introduced grassland/leased pasture and old field, 8.3 ac early/mid-successional and riparian woodlands, and 0.65 ac wetlands habitat	Potential release to ecological receptors	Habitats disturbed	Habitats disturbed	Habitats disturbed
Wetland and Floodplain	Potential release to wetlands and floodplain	Potential loss of 0.2 ac wetlands; no floodplain impact	Potential loss of 0.2 ac wetlands; no floodplain impact	Potential loss of 0.65 ac wetlands; no floodplain impact	Potential release to wetlands and floodplain	Potential for runoff and limited excavation in wetlands and floodplain	Potential for runoff and limited excavation in wetlands and floodplain	Potential for runoff and limited excavation in wetlands and floodplain
Socioeconomic and Land Use	Restriction of site's future use	Restriction of site's future use (51 ac)	Potential future use of site	Restriction of site's future use (35 ac)	Restriction of site's future use	8.7 percent increase for CMSA revenue over 30 years[d]	26.5 percent increase for CMSA revenue over 51 months	13.2 percent increase for CMSA revenue over 30 years
Cultural Resources	No impact	No impact	No impact	No impact	No impact	No impact due to identification and management	No impact due to identification and management	No impact due to identification and management
Transportation	No impact	No impact	No impact	No impact	No impact	Minor traffic increase during remedial activities	Minor traffic increase during remedial activities	Minor traffic increase during remedial activities

[a]ac = acre
[b]Commitment of acreage is at the FEMP unless otherwise indicated. Note that 1.0 acre = 0.4 hectares (ha)
[c]Impacts to woodlands and wetlands from potential on-site borrow activities are not included.
[d]Most of the consolidated metropolitan statistical area (CMSA) revenue increase would occur during the performance of the alternative (i.e., 51 months) with minimal increase during operation and maintenance activities (if required).

Source: Table 5-14, Operable Unit 2 FS Report.

8.1.4 Reduction of Toxicity, Mobility, or Volume Through Treatment

Alternative 1, No Action, does not include treatment and would not result in a reduction of toxicity, mobility, or volume.

However, each action alternative would include treatment of construction water at the AWWT facility prior to monitoring and discharge to the Great Miami River. These alternatives would also include treatment of lead contaminated mixed waste and transport to an off-site disposal facility. Alternative 2, Consolidation and Capping, would include treatment of perched groundwater collected in the subsurface drain from the South Field area.

Alternative 3, Excavation and Off-Site Disposal, and Alternative 6, Excavation and On-Site Disposal with Off-Site Disposal of Fraction Exceeding Waste Acceptance Criteria, would include crushing/shredding and dewatering/drying of selected contaminated material. For Operable Unit 2, these treatments would have an insignificant change in the total volume for disposal, no change in the toxicity, and little or no change in the mobility of contaminants. The need for additional treatment to meet an off-site disposal facility's waste acceptance criteria is not anticipated.

In total, the reduction of toxicity, mobility, or volume through treatment is considered equivalent for all action alternatives, because the amount of material being treated is minimal. New treatment technologies will continue to be evaluated; if one is developed in the future that may significantly reduce the volume, toxicity, or mobility of Operable Unit 2 remediation waste, it will be considered
No. 16 for use at the FEMP site. Engineering studies will be performed on the geochemical barriers and brickmaking technologies during the Remedial Design process. These studies would be completed in a phased approach to determine (1) the effectiveness of the two technologies, and (2) the need for additional studies. DOE would proceed with further studies only if it is determined that the technologies are cost effective and reduce contaminant toxicity, mobility, or volume.

8.1.5 Short-Term Effectiveness

Alternative 1, No Action, would be highly effective relative to short-term risks since there would be no remedial activities. Therefore, there would be no additional short-term risk to workers or the community around the FEMP site.

For Alternative 2, Consolidation and Capping, contaminated material would only be excavated to remove it from direct contact with the Great Miami Aquifer and to facilitate placement of the capping system at each subunit. This alternative would result in minimal risk to site workers and the public because much of the material remains in place at the subunits.

Alternative 6, the preferred remedial alternative, would involve removal of contaminated material and disposal in an on-site engineered disposal facility. During excavation activities and placement of the material in the disposal facility, there would be potential exposure to the remediation workers. This exposure potential would be managed in accordance with a Health and Safety Plan and, therefore, is considered acceptable. Potential risks to the on-site non-remediation workers and to the off-site general public would be managed through application of appropriate administrative and engineering controls, and are therefore considered minimal.

Alternative 3, Excavation and Off-Site Disposal, would involve removal and disposal of contaminated/material at an off-site disposal facility. This alternative would entail excavation and off-site transport of contaminated material. This would result in increased exposure to on-site workers during handling (drying, crushing/shredding, packaging, and loading) and the off-site public during transportation. These exposure potentials would be managed in accordance with a Health and Safety Plan, applicable transportation requirements, and applicable appropriate administrative and engineering controls, and are, therefore, considered acceptable.

Alternative 1 would provide the best short-term effectiveness since no remedial activities would occur. Alternative 2 would provide slightly better short-term effectiveness than Alternative 6 because less contaminated material is excavated, and small amounts of contaminated material is treated and transported off-site for disposal in both alternatives. Alternative 3 would provide the least short-term effectiveness because of the potential to expose the community to contaminated material during transportation to an off-site disposal facility.

Table 8-2 summarizes the short-term impacts on the environment from the Operable Unit 2 remedial alternatives.

8.1.6 Implementability

There would be no implementation required for Alternative 1 because no remedial activities would be involved. For the remaining "action alternatives", removal and treatment of perched groundwater at the AWWT facility would be both technically and administratively implementable.

Alternative 2, Consolidation and Capping, would be the most implementable of the action alternatives. Consolidation of the materials would be relatively simple and the capping system at each

subunit would be readily constructable. A minimum amount of material (lead-contaminated soil from the Firing Range) would require off-site disposal, so no issues are anticipated that would affect the administrative feasibility of this action.

Alternative 6, Excavation and On-Site Disposal with Off-Site Disposal of Fraction Exceeding Waste Acceptance Criteria, the preferred alternative, would require a CERCLA ARAR waiver from the EPA to construct an on-site disposal facility over a high-yield sole-source aquifer. The combination of existing hydrogeology and engineering controls of the on-site disposal facility is equivalent to the hydrogeologic requirements established by OEPA for an exemption to the prohibition of siting a new solid waste disposal facility over a high-yield sole-source aquifer. Therefore, this alternative would be administratively implementable, since the disposal facility would meet the criteria for an EPA CERCLA ARAR waiver of the OEPA siting criteria based upon achieving a standard of equivalent performance. If the fraction of remediation waste above the waste acceptance criteria is sent to a commercial off-site disposal facility, an exemption is anticipated to be needed from the DOE Order 5820.2A requirement that waste must go to a DOE facility for disposal.

Alternative 3, Excavation and Off-Site Disposal, would not require the construction of caps or a disposal facility at the FEMP, but would require a significant quantity of contaminated material to be disposed off-site. The off-site disposal would be subject to various local, state, and federal requirements and would require coordination with jurisdictional agencies. Therefore, this alternative would be administratively possible to implement, but may be time consuming. Issues associated with transportation and public acceptance could arise. If the remediation waste is sent to a commercial off-site disposal facility, an exemption is anticipated to be needed from the DOE Order 5820.2A requirement that waste must go to a DOE facility for disposal.

Alternative 2 would be the most implementable of the "action alternatives" because reliable technology would be used and no issues are anticipated with the administrative implementability. Alternative 6 is considered more implementable than Alternative 3 because an EPA CERCLA ARAR waiver from OEPA siting requirements has been discussed with the appropriate agencies and indications are that a waiver is possible, whereas transportation and public acceptance (alluded to during the Operable Unit 4 and Operable Unit 1 public comment periods) of the transport of contaminated material to the off-site facility affects several states and regulatory agencies.

8.1.7 Cost

Alternative 1 would be the least costly since there would be no remedial activities. Of the remaining alternatives, Alternative 2 is the next least costly at $69,644,000 followed by Alternative 6 at $105,950,000, with Alternative 3 as the most expensive at $212,795,000 (all costs presented as net present worth). It is important to note that for an unbiased comparison of alternatives with varying construction schedules and monitoring and maintenance costs, the cost estimates were prepared on a net present worth basis which is basically the amount of money that would have to be invested today, taking into consideration inflation and discount rates, to completely pay for all construction costs for an alternative, including 30 years of monitoring and maintenance costs following remediation.

Based on assumptions concerning field operations, the construction duration of each alternative falls within a narrow range (i.e., plus or minus 4 months). It was, therefore, assumed that the construction duration for each of the alternatives was the same.

8.1.8 State Acceptance

The State of Ohio has requested that DOE agree to certain stipulations as conditions for obtaining State concurrence on the Operable Unit 2 remedial alternative. These stipulations are:

- No off-site waste shall be disposed of in the proposed engineered disposal facility or any other facility on the FEMP site.
- The disposal facility waste acceptance criteria for uranium-238 shall be set at a maximum of ~~360~~ 346 pCi/g with the flexibility to be lowered based upon other operable unit decisions and volumes.
- No characteristic hazardous waste shall be disposed of in the facility.
- DOE shall use excavation and waste management techniques which will prevent the dilution of waste concentrations to meet the waste acceptance criteria.

These issues have been addressed in the Responsiveness Summary which is part of this ROD.

The State of Nevada (i.e., Division of Environmental Quality) and State of Utah (i.e., Department of Environmental Quality) concur with the balanced approach being employed for the remediation of Operable Unit 2. The balanced approach to waste management is when the small volumes of highly contaminated material from the site are sent off-site for disposal while the larger volumes of material with lower concentrations are safely managed on site. Both states conveyed that by taking this balanced approach, their support for waste disposal facilities in their own states receiving out-of-state waste would continue.

8.1.9 Community Acceptance

No. 27 No member of the local public, including the Fernald Citizens Task Force (FCTF), prefers contaminated materials from Fernald to be disposed of on the FEMP site. Some members of the local community expressed absolute non-acceptance of the selected remedy. They believe for various reasons (e.g., geology, population density, personal preference) that the implementation of an on-site disposal facility is unacceptable. ~~Other members of the local community expressed their acceptance of the on-site disposal facility (if the same conditions/stipulations expressed by the State of Ohio are met) with the view that waste disposal is a global issue and technological, political, and practical considerations need to be factored into decision making.~~ However, other stakeholders understand the necessity of taking a balanced approach to cleanup. Those stakeholders expressed a similar position, as is paraphrased from the FCTF March 11, 1995 recommendation:

> It is necessary to take a balanced approach to cleanup because if the decision was made to send all Fernald waste and contaminated materials off site, Fernald would face the likelihood of reprisals from other states resulting in not being able to send any waste off site. By managing the Fernald materials fairly and effectively, DOE will be in a more equitable position to prevent a decision to send outside wastes to Fernald.
>
> In addition, as a result of current and foreseeable budget conditions, a decision to send waste off-site would greatly delay cleanup and may prevent any progress at all. An on-site disposal facility is thus more viable under the current budget and political constraints. Hence, the on-site disposal facility is the quickest way to protect the aquifer and overall environment in the long-term, and any failure of the disposal facility would not present any immediate or significant threat to human health and the environment. Those stakeholders also recognize that any on-site disposal facility will be built for long-term performance using the best design, technology, and engineering controls available (including an adequate buffer zone and continued federal ownership of any property containing the disposal facility), that it will be continually monitored, and that the federal government will have adequate procedures in place to identify and correct any failures to the disposal facility.

Stakeholders in Nevada expressed their support for the proposed balanced approach for the remediation of Operable Unit 2. They believe that all sites must bear the burden of sharing in the resolution of these problems to ensure that they are not simply passed on to other locations. They

also feel that it is important that possible health and safety risks to the public be minimized by reducing the volume of waste transported off the FEMP site.

9.0 SELECTED REMEDY

Based upon consideration of the requirements of CERCLA, the detailed analysis of the alternatives using the nine criteria, and public comment, DOE and EPA have determined that Alternative 6 is the most appropriate remedy for Operable Unit 2 at the FEMP.

Alternative 6 will be protective of the federal ownership scenario through excavation of all waste materials and soils with COCs above the cleanup levels (presented in Section 9.2), material processing for size reduction and moisture control if required, on-site disposal in an engineered disposal facility, off-site disposal of a small fraction of the excavated material that exceeds the waste acceptance criteria of the on-site disposal facility, and continued federal ownership of the FEMP. The key components of the selected remedy are summarized below.

9.1 KEY COMPONENTS

The selected remedy consists of the following key components:

- Construction of the engineered on-site disposal facility. The on-site disposal facility will be located within the limits of the potentially acceptable region shown on Figure 7-1 and will have at least a 300-foot buffer zone between the waste and the property boundary.

  The on-site disposal facility will be constructed with a composite liner of soil and geosynthetics. The excavated material will be placed on the liner system. The composite cap of soil and geosynthetics will be constructed above the waste and tied-in with the liner system. Construction will also include associated site work and installation of monitoring wells. The composite liner and cap will be as shown on
  No. 28 Figure 7-2, or equivalent. The design of the disposal facility is subject to review and approval during remedial design based on additional investigations and the design process.

- Excavation at the Operable Unit 2 subunits to the required depth established by the RI and FS Reports to remove materials with COC concentrations above the cleanup levels (see Section 9.2). Excavation will be performed in such a way as to minimize possible
  No. 29 dilution of waste and the concept of ALARA will be documented in the Remedial Action Work Plan and implemented during construction.

- Verification sampling and testing in the excavated area to confirm that material with COC concentrations above the cleanup levels has been removed. If the results of the verification sampling and testing indicate that contamination above cleanup levels remains, then additional excavation and verification sampling and testing will be performed until acceptable results are obtained.

- Segregation of debris (e.g., concrete, steel, pallets, etc.) from Operable Unit 2 subunits and processing for size reduction, if required, before disposal in the on-site disposal facility.

- Collection and treatment of the construction water from the Operable Unit 2 subunits and disposal facility construction areas.

No. 1

- Establishment of maximum waste acceptance criteria for the on-site disposal of Operable Unit 2 materials. Operable Unit 2 material with concentrations at or below ~~360~~ 346 pCi/g of uranium-238 or ~~1,080~~ 1,030 ppm of total uranium will be accepted at the on-site disposal facility.

No. 1

- Transportation and on-site disposal of excavated material with a concentration at or below ~~360~~ 346 pCi/g of uranium-238, or ~~1,080~~ 1,030 ppm of total uranium.

No. 1

- Transportation and off-site disposal of approximately 3,100 cubic yards of material with a concentration of uranium-238 above ~~360~~ 346 pCi/g, or of total uranium above ~~1,080~~ 1,030 ppm.

- Excavation, treatment, and off-site disposal of approximately 300 cubic yards of lead-containing soil from the South Field Firing Range that will be handled as mixed waste.

- Restoration of Operable Unit 2 subunits after excavation and verification sampling and testing. Restoration of the Operable Unit 2 subunits will include grading of the subunits to blend with the surrounding topography, seeding, fencing, and the installation of monitoring wells.

Nos. 8, 9, 31, 10a

- Institutional controls such as access restrictions (fencing) and groundwater monitoring at the Operable Unit 2 subunits and on-site disposal facility. Monitoring will continue for at least 30 years following closure of the on-site disposal facility. ~~If at any time in the future portions of the FEMP property are transferred or sold, restrictions on the property would be included in the deed, as required by CERCLA.~~ Continued federal ownership of the FEMP is also a key component of the selected remedy.

No. 32

- Maintenance of the Operable Unit 2 subunits after restoration and maintenance of the on-site disposal facility, including the capping system and leachate collection system. Because this remedy will result in contaminants remaining on site in an engineered disposal facility, a review will be conducted no less often than every five years after the initiation of remedial action in accordance with CERCLA § 121(c) to ensure that the remedy continues to provide adequate protection of human health and the environment. This review will continue until determined that it is no longer needed to maintain protectiveness of the disposal facility.

The net present worth cost for the selected remedy based on a construction duration of 51 months and 30 years for operations and maintenance (O&M) after remediation is $105.9 million. This net present worth cost includes $85.9 million for construction and $20.0 million for O&M after remediation.

No. 10b

These cost estimates are based on conservative estimates of waste volume. The on-site disposal facility will be constructed in phases to accommodate only that waste which is generated.

Figure 7-1 depicts the proposed feasible location of the on-site disposal facility. Based on a series of soil borings made in the area, the geology of the disposal facility location identified in the figure in combination with the engineering controls will be protective of human health and the environment. However, the disposal facility location is subject to review and approval during the remedial design No. 14 phase. DOE intends to construct only one disposal facility at the FEMP. ~~Therefore,~~ Should on-site disposal be selected for other ~~Fernald~~ FEMP operable units, the disposal facility capacity and ~~location~~ configuration would be adjusted accordingly during the remedial design process to accommodate other FEMP operable unit remediation wastes (that meet the established waste acceptance criteria). DOE will not dispose of any off-site waste in this on-site disposal facility.

9.2 CLEANUP LEVELS

The goals for protecting human health and the environment depend on the contaminated media and the exposure pathways. The exposure pathways are dependent on the future land use designated for the FEMP site. The two land-use scenarios considered in the FS are continuing federal ownership of the FEMP (with restricted access) and the site being used by a farmer with no use limitations. These scenarios represent two extremes of land use; future land use may be similar to either one of these scenarios or may fall between these two scenarios. Corresponding soil cleanup levels have been determined to meet the acceptable risk range (1×10^{-4} to 1×10^{-6} and a HI = 0.2). If found to be necessary, the Operable Unit 5 ROD will modify the Operable Unit 2 cleanup levels downward to ensure protectiveness of human health and the environment.

The cleanup levels for the selected alternative were developed to protect the expanded trespasser
No. 33 under a future land-use scenario of continued federal ownership~~ and are presented in Table 9-1~~. A
No. 6 multi-step process was followed to develop the Operable Unit 2 cleanup levels, ~~also known as~~ which were called Preliminary Remediation Levels (PRLs) in the FS/PP. The first step of the process was to develop risk-based Preliminary Remediation Goals (PRGs), which are cleanup levels based on results of the Baseline Risk Assessment that are protective of human health. Risk-based PRGs were then modified based on a number of factors including access controls, such as fencing to keep intruders out, and proposed engineering controls.

No. 33 The Operable Unit 2 cleanup levels have been divided into primary and secondary cleanup levels, which are presented in Table 9-1 and Table 9-2, respectively. The COCs for the primary cleanup levels contribute over 90 percent of the risk from Operable Unit 2 and over 99 percent of the volumes to be excavated under the selected alternative. The COCs for the secondary cleanup levels pose risks that are close to the 10^{-6} point of departure and contribute a small percentage to the overall risk from Operable Unit 2. Based on existing analytical results from the RI and the volume calculations from the FS, secondary cleanup levels will most likely be achieved by remediation to the primary levels, however, will be confirmed through post-remediation sampling.

TABLE 9-1

OPERABLE UNIT 2 PRIMARY SOIL CLEANUP LEVELS FOR THE SELECTED ALTERNATIVE

Contaminant of Concern (COC)	Units	Background[a]	Cleanup Level[b]	Basis for Cleanup Level
ALL SUBUNITS				
Radium-226	pCi/g	1.42	1.8	10^{-6} ILCR[c]
Radium-228	pCi/g	1.25	2.0	10^{-6} ILCR
Thorium-228	pCi/g	1.43	1.8	10^{-6} ILCR
Thorium-232	pCi/g	1.36	1.5	10^{-6} ILCR
SOLID WASTE LANDFILL				
Uranium-234[g]	pCi/g	1.04	62.9	10^{-6} ILCR
Uranium-235/236[g]	pCi/g	0.15	63.1	10^{-6} ILCR
Uranium-238	pCi/g	1.22	12.9[d]	ARAR[e,f]
Uranium-Total	mg/kg	3.4	38.6	ARAR[f]
LIME SLUDGE POND				
Uranium-234[g]	pCi/g	1.04	196	10^{-6} ILCR
Uranium-235/236[g]	pCi/g	0.15	195	10^{-6} ILCR
Uranium-238	pCi/g	1.22	45.3[d]	ARAR[f]
Uranium-Total	mg/kg	3.4	136	ARAR[f]
INACTIVE FLYASH PILE (WASTE/SOIL OVER THE GREAT MIAMI AQUIFER)				
Arsenic	mg/kg	8.2	16.9	10^{-6} ILCR
Uranium-234[g]	pCi/g	1.04	8.68	10^{-6} ILCR
Uranium-235/236[g]	pCi/g	0.15	7.79	10^{-6} ILCR
Uranium-238[g]	pCi/g	1.12	6.12	10^{-6} ILCR
Uranium-Total[g]	mg/kg	3.4	24.8	ARAR[f]
INACTIVE FLYASH PILE (WASTE/SOIL LOCATED OVER >16 FEET NATURAL SOIL)				
Arsenic	mg/kg	8.2	16.9	10^{-6} ILCR
Uranium-234[g]	pCi/g	1.04	4.24	10^{-6} ILCR
Uranium-235/236[g]	pCi/g	0.15	3.35	10^{-6} ILCR
Uranium-238[g]	pCi/g	1.12	3.22	10^{-6} ILCR
Uranium-Total[g]	mg/kg	3.4	24.8	ARAR[f]
SOUTH FIELD (WASTE/SOIL LOCATED OVER THE GREAT MIAMI AQUIFER)				
Lead[h]	mg/kg	26.4	400	ARAR[i]
Thorium-230[g]	pCi/g	1.97	6.97	ARAR[j]
Uranium-234[g]	pCi/g	1.04	8.68	10^{-6} ILCR
Uranium 235/236[g]	pCi/g	0.15	7.79	10^{-6} ILCR
Uranium-238[g]	pCi/g	1.12	6.12	10^{-6} ILCR
Uranium-Total[g]	mg/kg	3.4	24.8	ARAR[f]

See footnotes at end of table.

TABLE 9-1
(Continued)

Contaminant of Concern (COC)	Units	Background[a]	Cleanup Level[b]	Basis for Cleanup Level
SOUTH FIELD (WASTE/SOIL LOCATED OVER >16 FEET NATURAL SOIL)				
Thorium-230[g]	pCi/g	1.97	6.97	ARAR[j]
Uranium-234[g]	pCi/g	1.04	4.24	10^{-6} ILCR
Uranium 235/236[g]	pCi/g	0.15	3.35	10^{-6} ILCR
Uranium-238[g]	pCi/g	1.12	3.22	10^{-6} ILCR
Uranium-Total[g]	mg/kg	3.4	24.8	ARAR[f]
ACTIVE FLYASH PILE				
Arsenic	mg/kg	8.2	16.9	10^{-6} ILCR
Uranium-234[g]	pCi/g	1.04	8.64	10^{-6} ILCR
Uranium-235/236[g]	pCi/g	0.15	7.75	10^{-6} ILCR
Uranium-238[g]	pCi/g	1.12	6.12	10^{-6} ILCR
Uranium-Total[g]	mg/kg	3.4	28	ARAR[f]

[a]Background value from Operable Unit 2 RI Report, Table 4-1A, surface concentrations.
[b]The cleanup level is the lowest value of the 10^{-6} ILCR, 0.2 Hazard Index, or ARAR standard.
[c]ILCR = incremental lifetime cancer risk. In the case of radionuclides, the cleanup level is the concentration responsible for the incremental risk plus the background concentration.
[d]This value determined by calculating the uranium-238 concentration in uranium-total.
[e]ARAR = applicable or relevant and appropriate requirement
[f]Based on the proposed MCL for uranium (56 Federal Register 33050).
[g]Cleanup level due to off-property resident farmer receptor
[h]The lead cleanup level applies to the Firing Range only, not the entire South Field area.
[i]Based on the EPA "Revised Interim Soil Lead Guidance for CERCLA Sites and RCRA Corrective Action Facilities" (OSWER Directive 9355.4-12).
[j]Based on DOE Order 5400.5, Chapter IV (4)(a)(2).

Source: Table 2-23, Operable Unit 2 FS Report.

Comment Nos. 3, 5, 33

TABLE 9-2

OPERABLE UNIT 2 SECONDARY SOIL CLEANUP LEVELS FOR THE SELECTED ALTERNATIVE

Contaminant of Concern (COC)	Units	Background[a]	Cleanup Level[b]	Basis for Cleanup Level
SOUTH FIELD (WASTE/SOIL LOCATED OVER THE GREAT MIAMI AQUIFER)				
Aroclor-1260[c]	mg/kg	0	25	10^{-6} ILCR[d]
Benzo(a)anthracene	mg/kg	0	0.455	ARAR[e,f]
Benzo(a)pyrene	mg/kg	0	0.777	ARAR[f]
Benzo(b)fluoranthene[c]	mg/kg	0	0.513	ARAR[f]
Benzo(k)fluoranthene	mg/kg	0	0.603	ARAR[f]
Dibenzo(a,h)anthracene[c]	mg/kg	0	0.157	ARAR[f]
Dieldrin	mg/kg	0	0.00957	ARAR[f]
Indeno(1,2,3-cd)pyrene[c]	mg/kg	0	0.496	ARAR[f]
Phenanthrene	mg/kg	0	0.19	ARAR[f]
Technetium-99	pCi/g	0	71	10^{-6} ILCR
Thorium-230[c]	pCi/g	1.97	6.97	ARAR[g]
SOUTH FIELD (WASTE/SOIL LOCATED OVER >16 FEET NATURAL SOIL)				
Aroclor-1260[c]	mg/kg	0	25	10^{-6} ILCR
Benzo(a)anthracene	mg/kg	0	0.455	ARAR[f]
Benzo(a)pyrene	mg/kg	0	0.777	ARAR[f]
Benzo(b)fluoranthene[c]	mg/kg	0	0.513	ARAR[f]
Benzo(k)fluoranthene	mg/kg	0	0.603	ARAR[f]
Dibenzo(a,h)anthracene[c]	mg/kg	0	0.157	ARAR[f]
Dieldrin	mg/kg	0	0.00957	ARAR[f]
Indeno(1,2,3-cd)pyrene[c]	mg/kg	0	0.496	ARAR[f]
Phenanthrene	mg/kg	0	0.19	ARAR[f]
Technetium-99	pCi/g	0	71	10^{-6} ILCR
Thorium-230[c]	pCi/g	1.97	6.97	ARAR[g]
ACTIVE FLYASH PILE				
Neptunium-237	pCi/g	0	4.99	10^{-6} ILCR

[a]Background value from Operable Unit 2 RI Report, Table 4-1A, surface concentrations.
[b]The cleanup level is the lowest value of the 10^{-6} ILCR, 0.2 Hazard Index, or ARAR standard.
[c]Cleanup level due to off-property resident farmer receptor.
[d]ILCR = incremental lifetime cancer risk. In the case of radionuclides, the cleanup level is the concentration responsible for the incremental risk plus the background concentration.
[e]ARAR = applicable or relevant and appropriate requirement
[f]Based on the Ohio Water Quality Standards (OAC 3745-1-07)
[g]Based on DOE Order 5400.5, Chapter IV (4)(a)(2).

Source: Table 2-23, Operable Unit 2 FS Report.

Comment No. 33

10.0 STATUTORY DETERMINATIONS

In accordance with the statutory requirements of Section 121 of CERCLA, as amended, remedial actions taken pursuant to Sections 104 and 106 must satisfy the following:

- Be protective of human health and the environment.
- Comply with all ARARs established under federal and state environmental laws (or justify a waiver).
- Be cost effective.
- Utilize permanent solutions and alternative technologies or recovery technologies to the maximum extent practicable.
- Satisfy the statutory preference for remedies that utilize treatment and also significantly reduce the toxicity, mobility, and volume of the hazardous substances, pollutants, or contaminants.

In addition, CERCLA §121(c) requires five year reviews to determine if adequate protection of human health and the environment is being maintained where remedial actions result in hazardous substances remaining on-site above health-based levels. A discussion is provided below on how the selected response action for Operable Unit 2 satisfies these requirements.

10.1 PROTECTION OF HUMAN HEALTH AND THE ENVIRONMENT

The selected remedy achieves the requirement of being protective of human health and the environment by removing the sources of contamination and disposing of the excavated material in an engineered on-site disposal facility and a fraction of material at an off-site disposal facility. The on-site disposal facility ~~would~~ will utilize engineering design features to prevent human and ecological contact with the contaminated material. The facility ~~would~~ will also be designed so that based on current EPA standards and modeling/risk assessment methodologies, it ~~would~~ will not pose unacceptable impacts to the Great Miami Aquifer. Baseline cancer risks from current conditions exceed the 10^{-4} to 10^{-6} acceptable risk range established by EPA in the NCP. Under the future land use scenario of continued federal ownership, the residual cancer risk associated with Operable Unit 2 ~~would~~ will be reduced to 2.5×10^{-6} which is within the acceptable target risk range. Non-carcinogenic hazards ~~would~~ will be reduced to 2.0×10^{-2} which is less than the EPA standard of 1.0.

No. 2

10.2 COMPLIANCE WITH ARARs

Compliance with the chemical-, action-, and location-specific ARARs is discussed below. Detailed discussion of the principal ARARs and TBCs is presented in Section 7.5. The complete list of applicable requirements, relevant and appropriate requirements, and TBCs is presented in Appendix A.

10.2.1 Chemical-Specific ARARs/TBCs

No. 2 Alternative 6 ~~would~~ will comply with the chemical-specific ARARs/TBCs discussed in Section 7.5.2 and identified in Table A-1 of Appendix A. ARARs associated with penetrating radiation and potential releases of contaminants to air, surface water, and groundwater ~~would~~ will be met through
No. 6 the removal of all contaminated material above ~~PRLs~~ cleanup levels from Operable Unit 2. Most of this material ~~would~~ will be disposed at an on-site disposal facility. Operable Unit 2 remediation waste that does not meet the on-site waste acceptance criteria ~~would~~ will be sent to an approved off-site disposal facility.

No. 2 The engineering controls and institutional actions described earlier for the on-site disposal facility were established for the protection of human health and ~~would~~ will ensure that the groundwater MCLs and non-zero MCLGs ~~would~~ will be met at the boundary of the disposal facility and at each Operable Unit 2 subunit. Ohio Water Quality Standards ~~would~~ will be met at both Paddys Run and the Great Miami River. Air emission and radon protection standards ~~would~~ will also be met above the on-site disposal facility and each subunit.

No. 2 Although ARARs are not pertinent to the no action alternative, the FS compared the fate and transport modeling results for the No Action Alternative (Alternative 1) to the chemical-specific ARARs in order to establish a baseline against which the "action alternatives" could be compared to demonstrate compliance. The South Field was the only subunit that would exceed the surface water ARARs for the No Action Alternative. Under Alternative 6, the selected remedial alternative, the concentrations of dieldrin and polynuclear aromatic hydrocarbons (PAHs) at Paddys Run ~~would~~ will be equal to the ARAR standards of 7.6×10^{-4} microgram/liter (μg/L) and 0.31 μg/L, respectively. The concentrations at the Great Miami River ~~would~~ will be 9.8×10^{-7} μg/L for dieldrin (below the 7.6×10^{-4} μg/L standard) and 4.1×10^{-4} μg/L for PAHs (below the 0.31 μg/L standard). These concentrations are for the expanded trespasser scenario, which ~~would~~ will have higher soil cleanup levels than the on-property resident farmer scenario. Therefore, since the expanded trespasser

No. 2 scenario ~~would~~ will meet the ARAR standards, the on-property farmer scenario ~~would~~ will meet them also.

Table 10-1 illustrates that on-site disposal also brings Operable Unit 2 into compliance with the proposed groundwater MCL for uranium, which would not be met under the No Action Alternative. The maximum groundwater concentration is presented in the table (underneath subunit); therefore, the points of compliance, which are at the boundaries of the subunit and the on-site disposal facility, No. 2 ~~would~~ will also comply with the proposed uranium MCL. Treated construction water ~~would~~ will meet the Ohio Water Quality Standards found in Table A-1 of Appendix A.

TABLE 10-1

COMPLIANCE WITH OPERABLE UNIT 2 CHEMICAL-SPECIFIC ARARs

ALTERNATIVE 6

MAXIMUM CROSS-MEDIA GROUNDWATER CONCENTRATIONS[a]							
COC	ARAR Standard	Point of Compliance	Solid Waste Landfill	Lime Sludge Ponds	Inactive Flyash Pile/South Field	Active Flyash Pile	On-Site Disposal Facility
Total Uranium	20 μg/L[b]	Under Subunit	18 μg/L	3.2 μg/L	18.4 μg/L	10.7 μg/L	20 μg/L
		FEMP Fenceline	0.7 μg/L	0.1 μg/L	2.2 μg/L	1.5 μg/L	2.1 μg/L

No. 2 [a] These concentrations are for the expanded trespasser scenario, which ~~would~~ will have higher soil cleanup levels than the on-property resident farmer. Therefore, since the expanded trespasser scenario ~~would~~ will meet the ARAR standards, the on-property resident farmer scenario ~~would~~ will meet them also. The groundwater modeling procedures and results are presented in detail in the FS Report, Appendix D.
[b] Proposed MCL (56 Federal Register 33050)

10.2.2 Action-Specific ARARs/TBCs

No. 2 Alternative 6 ~~would~~ will meet the principal action-specific ARARs/TBCs discussed in Section 7.5.3 and listed in Tables A-2, A-3, and A-4 of Appendix A. Because Operable Unit 2 includes both low-level radioactive waste/residual radioactive material and solid waste, design and construction of the on-site disposal facility ~~would~~ will meet the more stringent requirements for the disposal of low-level radioactive waste/residual radioactive material. EPA states in 40 CFR §192.02(a) that the disposal facility must be designed to be effective for up to 1,000 years, to the extent reasonably achievable, and in any case, for at least 200 years. DOE Order 5820.2A requires compliance with performance objectives for low-level radioactive waste disposal sites, including protection of public health and safety, protection of the public and the environment from releases of radioactivity, and protection of groundwater resources. DOE Order 5400.5 requires that the As Low As Reasonably Achievable (ALARA) policy to minimize radiation exposure be adopted during design and construction.

No. 2 The on-site disposal facility ~~would~~ will also meet the less stringent OEPA technical requirements for the disposal of solid waste. These requirements include specifications for the design and construction
No. 6 of a liner and cap system for the on-site disposal facility. Material with contaminant levels that are
& 34 below the ~~PRLs~~ cleanup levels ~~would not be considered waste and would~~ will be left in place.

No. 2 Material from the South Field Firing Range is assumed to be mixed waste and ~~would~~ will be treated and shipped to an off-site disposal facility that is approved to accept mixed waste. Firing Range material that is hazardous waste must comply with the storage, packaging, and transportation requirements of RCRA, including the manifest system, while it is being prepared and shipped from the FEMP. Packaging and transportation of the Firing Range wastes ~~would~~ will also be required to meet DOE requirements for the transport of hazardous materials. Firing Range material that is not a
No. 6 hazardous waste, but contains COCs above the ~~PRLs~~ cleanup levels, ~~would~~ will be disposed of on-site with the rest of the South Field low-level radioactive waste/residual radioactive material.

10.2.3 Location-Specific ARARs/TBCs

No. 2 Alternative 6 ~~would~~ will not meet all the location-specific ARARs/TBCs discussed in Section 7.5.4 or in Table A-5 of Appendix A. Because the on-site disposal facility ~~would~~ will contain solid waste in addition to low-level radioactive waste/residual radioactive material, the following OEPA siting criteria from the Ohio Solid Waste Disposal Regulations are pertinent ARARs. OAC 3745-27-07 and -20 lists the following areas where a solid waste disposal facility may not be located:

- in surface and subsurface areas surrounding a public water supply well through which contaminants may move toward and may reach the public water supply well within a period of five years;
- above an aquifer declared by the Federal government under the Safe Drinking Water Act to be a sole source aquifer;
- above an unconsolidated aquifer capable of sustaining a yield of 100 gallons per minute for a 24-hour period to an existing or future water supply well located within 1,000 feet of the limits of solid waste placement;
- in a regulatory floodplain;
- within 1,000 feet of an existing water supply well or developed spring;
- within 300 feet of the facility's property line;
- within 1,000 feet of an existing residence whose owner has not consented in writing to the location of the facility;

- within 200 feet of a stream, lake, or wetland;
- the isolation distance between the uppermost aquifer system and the bottom of the recompacted soil liner of the disposal facility cannot be less than 15 feet of in situ or added geologic material.

The proposed feasible location of the on-site disposal facility is on the eastern side of the FEMP which is not in a floodplain; near a stream, lake, or wetland; within 1,000 feet of an existing water supply well or developed spring; ~~or~~ near enough to an existing public water supply well so that
No. 2 contaminants may reach the well within a period of 5 years. The facility ~~would~~ will not be placed within 300 feet of the FEMP property line or within 1,000 feet of an existing residential house. The isolation distance between the uppermost aquifer system and the bottom of the recompacted soil liner ~~would~~ will be greater than 15 feet.

The remaining two siting criteria (bullets two and three) cannot be met because of the FEMP's location over a sole-source aquifer that is capable of sustaining a yield of 100 gallons per minute for a
No. 24-hour period. OEPA has established two specific policies (GD202.101 and GD202.102) that
10c identify conditions that would be acceptable to allow an exemption to the siting criteria. While these policies state that several factors will be considered in evaluating an exemption, the specific factors identified indicate that the protection of human health and the environment should be provided solely by the existing hydrogeologic conditions. This has been reaffirmed by OEPA in several meetings.

The primary hydrogeologic standards established by these policies are:

- Significant thickness of low permeable material between the disposal facility and the aquifer
- Lack of inter-connection between the sole-source aquifer and any significant zones of saturation
- Significant amount of sediment [soil] between the disposal facility and the high-yield aquifer to prevent leachate from migrating to the high-yield aquifer during the life of the landfill and the post-closure care period. The post-closure care period for a solid waste landfill is a minimum of 30 years [OAC 3745-17-14(A)].

It has been determined, based on existing hydrogeologic information, that the existing hydrogeologic conditions at the FEMP do not fully meet these conditions. This is based on the possibility that some granular soils are interbedded in the till and the need to protect the aquifer for significantly longer than 30 years (at least for 200 years; an ARAR under 40 CFR 192).

Because the aquifer underlies the entire site, a waiver was requested to locate an on-site disposal facility on the FEMP. The waiver request was based on the ability of the selected remedial action, through the use of another method or approach, to attain a standard of performance that is equivalent to that required by the ARARs. The criteria in determining a CERCLA ARAR waiver based on an equivalent standard of performance [40 CFR 300.430 (f)(1)(ii)(C)(4)] are: degree of protection, level of performance, reliability into the future, and time required for results. Additional information on the OEPA requirements is presented in Section 7.5.4.

No. 10d ~~As the support for an OEPA exemption is a combination of performance and risk, the equivalent level of performance will address both factors.~~ The preamble to the NCP states that the purpose of this waiver is for the use of alternative but equivalent technologies and comparison based on risk is only permitted where the original standard is risk-based. The Ohio exemption guidance, with its focus on geological conditions, is for the most part analogous to a technology standard but also appears to be, with respect to level of performance, risk and technology based. Therefore the following analysis of the CERCLA waiver criteria uses a technology-based comparison, except for level of performance, which is a risk-based comparison. The circumstances of the selected alternative are considered equivalent to the OEPA requirements and thereby warrant the granting of a CERCLA ARAR waiver. The basis for equivalency is identified for each of the identified criteria:

Degree of protection:

- OEPA Standard

  The justification to allow a solid waste landfill over a high-yield sole-source aquifer is that the existing hydrogeology will provide adequate protection to the high yield sole source aquifer from the effects of a release of leachate and thereby protect the aquifer from contamination. The approach spelled out by the pertinent policies is to prevent leachate

from reaching the aquifer during the active life of the landfill and the post closure period of 30 years. The active life of the disposal facility for Operable Unit 2 wastes is estimated to be 4.25 years. It should be noted that if future operable unit decisions direct disposal of other wastes in the on-site disposal facility, the maximum active life could be approximately 20 years.

- Equivalent Standard

The combination of engineering controls and existing hydrogeology proposed in this alternative will provide the same degree of protection to the aquifer as the hydrogeologic conditions described in the OEPA policy alone. Modeling with the combined controls shows that the leachate will not reach the aquifer during the active life of the landfill and a post closure period of thirty years.

It should be noted that the modeling performed in the Operable Unit 2 FS Report (Appendix D.1) was performed for 1000 years and assumed that the liner system and man-made materials (e.g., leachate collection, leak detection, and synthetic liners) of the disposal facility would fail. This modeling showed that with the enhanced cap to reduce infiltration and the existing hydrogeology, leachate that may eventually reach the aquifer would not cause the constituent concentrations in the aquifer to exceed the promulgated and proposed MCLs.

Level of performance (method based):

- OEPA Standard

Significant thickness of low permeable material between the disposal facility and the aquifer

- Equivalent Standard

Modeling has shown that the combination of 12 feet of gray clay with a minimum k_d of 3.1
No. 1 and a maximum waste acceptance criteria of ~~360~~ 346 pCi/g of uranium-238, or ~~1,080~~ 1,030 ppm total uranium, will not exceed the proposed MCL for total uranium at the boundary of the disposal facility or a concentration level based on the 10^{-6} ILCR at the boundary of the FEMP. Only the layers in the engineered cap and the gray clay and unsaturated Great Miami Aquiferhydrogeologic layers were used in this modeling. The liner system and brown clay
No. 2 ~~would~~ will increase the protection of the aquifer.

- OEPA Standard

Lack of inter-connection between the sole source aquifer and any significant zones of saturation

- Equivalent Standard

Any inter-connections will be minimized by:

1) locating the disposal facility in an area with the greatest thickness of gray clay and the least occurrence of interbedded granular material; and

2) providing an increase in the engineered controls to compensate for any reduction of protection due to interbedded granular material; and/or

3) providing engineering control of lateral movement of water in an area of interbedded granular material by removing the granular material affecting the geologic protection of the aquifer or by preventing the movement of water from these areas to the aquifer.

- OEPA Standard

Significant amount of sediment [soil] must exist between the disposal facility and the high-yield aquifer to prevent leachate from migrating to the high yield aquifer during the life of the landfill and the post-closure care period. The post-closure care period for a solid waste landfill is a minimum of 30 years [OAC 3745-27-14(A)].

- Equivalent Standard

At a minimum, a total of four additional layers will be added to the standard solid waste cap and liner [OAC 3745-27-08(C)]. These layers are a sand filter, biotic barrier and bentonite composite layers in the cap to reduce infiltration and to protect the integrity of the cap. A leak detection layer will be provided in the liner to monitor the integrity of the containment system and to provide early warning to allow corrective action prior to any adverse impact to the aquifer. These additional engineering controls together with the natural hydrogeology will prevent leachate from reaching the aquifer during the post-closure care period.

Level of performance (risk based):

- OEPA Standard

ORC 3734.02(G) allows exemptions of OEPA regulations if an alternative is unlikely to adversely affect the public health or safety or the environment. The pertinent policies mirror this requirement using an approach which requires existing hydrogeologic conditions to provide this protection.

OEPA does not propose a specific definition for the protection of human health and the environment. However, OAC 3745-27-10 (F)(7)(a)-(d), which specifies solid waste landfill operating requirements, sets forth concentration levels for constituents detected in the groundwater for which a corrective action is required. This standard provides an appropriate framework for risk analysis in this case because the waiver concerns the establishment of a solid waste disposal unit. These levels are concentrations that are at a statistically significant level to be:

- protective of human health and the environment; and

- the promulgated MCL; or

- background concentrations for constituents that do not have a promulgated MCL; or

- the alternative groundwater protection standard for a known or suspected carcinogen, concentration levels that represent a cumulative excess upper-bound lifetime cancer risk to an individual within the 1×10^{-4} to 1×10^{-6} range.

- Equivalent Standard

  This same definition has been used as a threshold criteria in evaluating alternatives in the CERCLA decision making process at the FEMP and specifically in the Operable Unit 2 FS with the addition that constituents in groundwater should not be higher than the proposed MCLs. This alternative meets this threshold criteria.

  Protection of human health has been determined through the risk assessment process based on contaminant transport modeling and the NCP acceptable ILCR range of $1x10^{-4}$ to $1x10^{-6}$ and in compliance with promulgated and proposed MCLs.

Reliability into the future:

The combination of hydrogeologic and engineering controls (including additional controls beyond the requirements for a solid waste disposal facility) provides increased reliability into the future because of the following:

- The biotic barrier in the cap will prevent burrowing animals or vegetative roots from compromising the integrity of the cap and thereby increasing the infiltration.

- Leak detection monitoring will provide an early warning of any problem in leachate containment and allow corrective measures to be undertaken prior to adverse impact to the aquifer.

Time required for results:

No. 10e ~~Not applicable to this circumstance.~~ Construction of a disposal facility with additional engineering controls will not take significantly longer than the time required for a disposal facility which strictly meets the Ohio Solid Waste Disposal Regulations.

A CERCLA ARAR waiver of the OEPA prohibition of siting a disposal facility over a high-yield sole-source aquifer is justified based on an equivalent standard of performance [40 CFR 300.430 (f)(1)(ii)(C)(4)] to the OEPA policies allowing an exemption to the siting requirements. This waiver
No. is applicable only to Operable Unit 2 on-site remediation wastes. If on-site disposal is chosen as the
10f selected remedy for other FEMP operable units, separate waivers from this Ohio requirement would be necessary.

The disposal facility location and design will be subject to review and approval during the remedial design phase. DOE intends to construct only one disposal facility at the FEMP. Therefore, should on-site disposal be selected for other Fernald operable units, the disposal facility capacity and location would be adjusted accordingly during the remedial design process.

There is a 0.1 hectares (0.2 acres) area of wetlands located to the north of the Solid Waste Landfill
No. 2 that ~~would~~ will be adversely impacted during the removal of contaminated material. Operable Unit 2 ~~would~~ will comply with the substantive permitting requirements for impacts to wetlands under the Clean Water Act (33 CFR §§ 323-330). Compensatory mitigation for wetlands impacted by Operable Unit 2 activities ~~would~~ will be determined using 404(b)(1) [33 United States Code (U.S.C.) §1344(b)(1)] guidelines of the Clean Water Act in consultation with the U.S. Army Corp of Engineers, EPA, and OEPA. The Inactive Flyash Pile and a portion of the South Field are located in the 100-year floodplain of Paddys Run. Under this alternative, no adverse impacts to the floodplain ~~would be~~ are expected.

10.3 COST EFFECTIVENESS

The selected remedy is cost-effective because it has been determined to provide overall effectiveness proportional to its costs, the net present worth value being $105.9 million. The estimated cost of on-site disposal is $36.3 million more than consolidation and capping and will provide greater long-term effectiveness and permanence than consolidation and capping through the use of an engineered disposal facility with liners and leachate detection and collection devices. While the selected remedy effectively reduces the hazards posed by all the contaminants of concern in Operable Unit 2, its cost is about one half of the cost of excavation and off-site disposal of contaminated material.

10.4 UTILIZATION OF PERMANENT SOLUTIONS AND ALTERNATIVE TREATMENT TECHNOLOGIES OR RESOURCE RECOVERY TECHNOLOGIES TO THE MAXIMUM EXTENT PRACTICABLE

EPA and the State of Ohio have determined that the selected remedy for Operable Unit 2 represents the maximum extent to which permanent solutions and treatment technologies can be utilized in a cost-effective manner for Operable Unit 2. Of those alternatives that are protective of human health and the environment and comply with ARARs, this selected remedy provides the best balance of tradeoffs among the alternatives in terms of long-term effectiveness and permanence, reduction in toxicity, mobility, and volume through treatment, short-term effectiveness, implementability, and cost, also considering State and community acceptance.

While the selected remedy does not offer as high a degree of long-term effectiveness and permanence as the off-site disposal alternative, it will significantly reduce the risks from the contaminated material through excavation and placement in an engineered on-site disposal facility. By combining all the remediation waste into one disposal location, it can be managed more effectively over the long-term.

The selected remedy also allows increased flexibility in land use options, a reduced size of buffer area, and centralized operations and maintenance.

The selected remedy does not provide a significant reduction of toxicity, mobility, or volume through treatment. Treatment of leachate and construction water will take place at the on-site AWWT facility and lead-contaminated mixed waste from the South Field Firing Range will be treated before being transported to an off-site disposal facility. Except for the no action alternative, each alternative includes the same amount of treatment.

The selected remedy provides adequate short-term effectiveness and is readily implementable. Because the majority of the waste material will remain on site during remediation, there is very little opportunity for public exposure to the contaminants. The exposure potential to remediation workers No. 2 ~~would~~ will be managed in accordance with a health and safety plan and is, therefore, considered acceptable. The on-site disposal alternative is considered to provide more short-term effectiveness and is more implementable than off-site disposal, but slightly less implementable than consolidation and containment. The selected remedy costs slightly more than consolidation and containment and is half the cost of off-site disposal.

The major tradeoffs that provide the basis for the selection of on-site disposal with off-site disposal of the fraction exceeding the waste acceptance criteria are long-term effectiveness and cost. The selected remedy provides the most reliable method of managing and monitoring the disposal of Operable Unit 2 contaminated material for the least cost. For this reason, Alternative 6 is determined to be the most appropriate remedy for the contaminated material from Operable Unit 2.

10.5 PREFERENCE FOR TREATMENT AS A PRINCIPAL ELEMENT

The selected remedy does not satisfy the statutory preference for treatment as a principal element. The NCP states in 40 CFR §300.430(a)(iii)(A) and (B) that "EPA expects to use treatment to address the principal threats posed by a site" and "to use engineering controls, such as containment, for waste that poses a relatively low long-term threat." Operable Unit 2 wastes are considered to pose a low long-term threat in all subunits except a portion of the waste in the Inactive Flyash Pile and South Field. This waste is considered a principal threat due to the placement of the waste and the vulnerable hydrogeology (sole-source Great Miami Aquifer) located underneath, not due to the concentrations or types of contamination. When this waste is excavated during the implementation of

the selected remedy, it will no longer be a principal threat to the site, and, under the NCP, is not expected to undergo treatment.

10.6 IRREVERSIBLE AND IRRETRIEVABLE COMMITMENT OF RESOURCES

No. 2 Natural resources at the FEMP site ~~would~~ will be disturbed by construction and excavation activities. Many impacts ~~would~~ will be temporary, pending completion of remedial activities. The implementation of the Operable Unit 2 remedy ~~would~~ will disturb 75 acres of FEMP soils including areas of riparian, aquatic and managed grassland habitats. All areas impacted by excavation activities ~~would~~ will be regraded to the surrounding grade and revegetated. However, implementation of the remedy ~~would~~ will also result in permanent commitments.

No. 2 Implementation of the selected remedy ~~would~~ will result in the commitment of 49 acres introduced grassland/leased pasture habitat, 8.3 acres early/mid-successional and riparian woodland habitat, and 0.65 acres drainage-ditch wetland habitat. Long-term impacts ~~would~~ will also occur from the implementation of an on-property borrow area. If this area is selected for borrow, approximately 17 acres of woodlands and associated species ~~would~~ will be committed. In addition, 3.0 acres of swale/forested wetland and associated habitat could also be committed as a result of on-site borrow activity.

The introduced grassland/leased pasture areas are generally inhabited by small mammals and several species of birds. Early/mid-successional and riparian woodlands are dominated by white ash (*Fraxinus americana*) and American elm (*Ulmus americana*). Typical pioneer successional species such as Japanese honeysuckle (*Lonicera japonica*), blackberry (*Rubus sp.*), and multiflora rose (*Rosa multiflora*) are also present. Habitat exists in the riparian areas for the Federally-listed endangered Indiana bat (*Myotis sodalis*).

Several taxa are primarily found only in the riparian area. Two of the most common taxa include the belted kingfisher (*Megaceryle alcyon*) and blue jay (*Cyanocitta cristata*). Based on incidental observations, Facemire *et al.*, (1990) also reported typical woodland amphibians and reptiles such as the eastern box turtle (*Terrapene carolina*), spring peeper (*Hyla crucifer*), and American toad (*Bufo americanus*). Common bats in the riparian area including the big brown bat (*Eptesicus fuscus*), red bat (*Lasiurus borealis*), and the little brown bat (*Myotis lucifugus*).

Aquatic habitats to be disturbed include wetlands, Paddys Run, and the Storm Sewer Outfall Ditch. On-property drainage ditch/swales support shrub and/or emergent vegetation. Broad-leaf cattail (*Typha latifolia*) is the most common species. Numerous woody species in swales include black willow (*Salix nigra*), roughleaf dogwood, and American elm. Surveys found state-listed threatened Sloan's crayfish (*Orconectes sloanii*) residing in Paddys Run (St. John 1993 and 1994). Paddys Run also supports a diverse community of macroinvertebrates and fish. Habitat in the Storm Sewer Outfall Ditch is minimal, as the ditch is dry most of the year.

No. 2 The 100- and 500-year floodplain of Paddys Run ~~would~~ will be directly and indirectly impacted as a result of remedial activities. Limited excavation in the floodplain ~~would~~ will occur during remedial activities at the flyash piles and South Field; however, changes in flood elevations ~~would~~ are not be expected. Engineering controls ~~would~~ will be implemented to minimize indirect impacts (i.e., runoff and sedimentation). Activities performed in the Storm Sewer Outfall Ditch ~~would~~ will be in accordance with 404 guidelines of the Clean Water Act. A Floodplain/Wetland Assessment was completed and is provided in Appendix H to the Operable Unit 2 FS Report.

Additionally, consumptive use of geologic resources (e.g., quarried rock, sand, and gravel) and
No. 2 petroleum products (e.g., diesel fuel and gasoline) ~~would~~ will be required for removal, construction, and disposal activities. Supplies of these materials ~~would~~ will be provided by the construction contractor. Additional fuel use ~~would~~ will result from limited off-site transport of the materials. Adequate supplies ~~would~~ will be available without affecting local requirements for these products. The treatment processes for the remedial action alternative ~~would~~ will require the consumptive use of materials and energy. The stabilization process ~~would~~ will require additives such as flyash and lime sludge, which are readily available at the FEMP site.

No. 2 Approximately 35 acres of the FEMP site, including a 300-foot buffer zone, ~~would~~ will be restricted for future use under the Operable Unit 2 selected remedial alternative. The committed land ~~would~~ will be actively monitored and maintained. Periodic monitoring of surface water and groundwater at the disposal facility ~~would~~ will be performed, and periodic site inspections ~~would~~ will identify any damage to the disposal facility. Maintenance activities ~~would~~ will be performed, as necessary. The off-site facility (for remediation waste exceeding the on-site waste acceptance criteria) ~~would be~~ is expected to implement similar measures as required under its specific regulatory criteria.

11.0 DOCUMENTATION OF SIGNIFICANT CHANGES

The *Proposed Plan for Remedial Actions at Operable Unit 2* was released for public comment in October 1994. The Proposed Plan identified Alternative 6, Excavation and On-Site Disposal with Off-Site Disposal of Fraction Exceeding the Waste Acceptance Criteria, as the preferred alternative. All written and oral comments submitted during the public comment period were reviewed. Based on these comments, it was determined that no significant changes to the remedy, as it was originally identified in the Proposed Plan, were necessary.

No. 1 One significant change from the Proposed Plan to this ROD, is a change in the maximum waste acceptance criteria for the on-site disposal facility. The Proposed Plan provided a waste acceptance criteria of 360 pCi/g of uranium-238 and 1,080 ppm of total uranium. A waste acceptance criteria of 346 pCi/g of uranium-238 and 1,030 ppm of total uranium was proposed in the Operable Unit 5 Proposed Plan. This difference in waste acceptance criteria is due to using different, but comparable, computer models for the calculations. The Operable Unit 2 and Operable Unit 5 waste acceptance criteria are essentially the same, however for consistency, Operable Unit 2 has adopted the Operable Unit 5 waste acceptance criteria of 346 pCi/g uranium-238 and 1,030 ppm total uranium. This significant change has been reflected in this ROD.

It should be noted that EPA and OEPA approved the Operable Unit 2 FS Report with comments prior to the public comment period for Operable Unit 2. The Operable Unit 2 FS Report was revised to address the comments from EPA and OEPA. Those comments, and DOE's proposed responses and revisions, were made known to the public and made available for public review during the public comment period; the comments did not result in significant changes or changes that could not be reasonably anticipated by the public.

REFERENCES

ATSDR, 1990, "Toxicological Profile for 2,3,7,8-Tetrachlorodibenzo-p-dioxin," Draft for Public Comment, U.S. Public Health Service, Atlanta, Georgia.

Comprehensive Environmental Response, Compensation, and Liability Act (CERCLA), as amended, 42 U.S.C. §9601 *et seq.*

Consent Agreement as Amended Under CERCLA Sections 120 and 106(a), 1991, U.S. Environmental Protection Agency and U.S. Department of Energy, Administrative Docket No. V-W-90-C-057.

Consent Decree, 1988, State of Ohio and U.S. Department of Energy, Civil Action No. C-1-86-0217.

Craig, J.R., U.S. Department of Energy, 1994, Letter to D. Ofte, FERMCO, Subject: Action Memorandum: South Field and Inactive Flyash Seepage Control, 10/25/94.

Dispute Resolution Agreement, 1993, U.S. Environmental Protection Agency and U.S. Department of Energy, Administrative Docket No. V-W-90-C-057.

Dollarhide, J., U.S. Environmental Protection Agency Environmental Criteria and Assessment Office (ECAO), 1993, Letter to P. VanLeeuwen, U.S. Environmental Protection Agency, Region V.

Facemire, C. F., S. I. Guttman, D. R. Sperger, 1990, "Biological and Ecological Site Characterization of the Feed Materials Production Center," FMPC-SUB 018, prepared for Westinghouse Materials Co. of Ohio, Cincinnati, OH.

Federal Facility Compliance Agreement, 1986, U.S. Environmental Protection Agency and U.S. Department of Energy.

Geotrans, Inc., 1987, "Data Input Guide for SWIFTIII, The Sandia Waste Isolation Flow and Transport Model for Fractured Media, Release 2.16, Modifications to NUREG/CR-3162," Geotrans, Herndon, VA.

Jones, T.D. and B.A. Owen, 1989, "Health Risks from Mixtures of Radionuclides and Chemicals in Drinking Water", Oak Ridge National Laboratory, Oak Ridge, Tennessee, ORNL-6533.

National Oil and Hazardous Substances Pollution Contingency Plan (NCP), 40 CFR Part 300.

St. John, F. L., 1993, "Report on the Status of the Sloan's Crayfish (*Orconectes sloanii* Bundy) at the Fernald Environmental Management Project," FERMCO, Cincinnati, OH.

St. John, F. L., 1994, "Addendum to the Report on the Status of the Sloan's Crayfish (*Orconectes sloanii* Bundy) at the Fernald Environmental Management Project," Draft, FERMCO, Cincinnati, OH.

Stipulated Amendment to Consent Decree, 1993, State of Ohio and U.S. Department of Energy, Civil No. C-1-86-0217.

U.S. Department of Energy, 1987, "Remedial Investigation and Feasibility Study, Feed Materials Production Center, Fernald, Ohio, Task 1 Report: Description of Current Situation," Vols. 1 and 2, DOE, Oak Ridge Operations, Oak Ridge, TN.

U.S. Department of Energy, 1988a, "FMPC Sampling and Analysis Report," Vols. 1 and 2, Draft, DOE, Oak Ridge Operations Office, Oak Ridge, TN.

U.S. Department of Energy, 1988b, "Remedial Investigation and Feasibility Study, Feed Materials Production Center, Fernald, Ohio, Work Plan Requirements," Rev. 3, DOE, Oak Ridge Operations Office, Oak Ridge, TN.

U.S. Department of Energy, 1993, "Site-Wide Characterization Report, FEMP, Fernald, Ohio, Remedial Investigation and Feasibility Study," U.S. DOE, Fernald Office, Fernald, OH.

U.S. Department of Energy, 1994, "Secretarial Policy on the National Environmental Policy Act," June 1994, U.S. DOE, Washington, D.C.

U.S. Department of Energy, 1995a, "Final Remedial Investigation Report for Operable Unit 2, FEMP, Fernald, Ohio, Remedial Investigation and Feasibility Study," U.S. DOE, Fernald Office, Fernald, OH.

U.S. Department of Energy, 1995b, "Work Plan, Removal Action No. 30: Seepage Control at the South Field and Inactive Flyash Pile," U.S. DOE, Fernald Office, Fernald, Ohio.

U.S. Department of Energy, 1995c, "Final Feasibility Study Report for Operable Unit 2, FEMP, Fernald, Ohio, Remedial Investigation and Feasibility Study," U.S. DOE, Fernald Office, Fernald, OH.

U.S. Environmental Protection Agency, 1988, "Superfund Exposure Assessment Manual," EPA/540/1-88/001, EPA, Office of Remedial Response, Washington, D.C.

U.S. Environmental Protection Agency, 1989a, "Risk Assessment Guidance for Superfund: Human Health Evaluation Manual, Part A, Interim Final," EPA/540/1-89/002, EPA, Office of Emergency and Remedial Response, Washington, D.C.

U.S. Environmental Protection Agency, 1989b, "Guidance on Preparing Superfund Decision Documents: The Proposed Plan, The Record of Decision, Explanation of Significant Differences, The Record of Decision Amendment," EPA/540/G-89/007, EPA, Office of Emergency Remedial Response, Washington, D.C.

U.S. Environmental Protection Agency, 1989c, "Interim Procedures for Estimating Risks Associated with Exposures to Mixtures of Chlorinated Dibenzo-p-dioxins and -Dibenzofurans (CDDs and CDFs) and 1989 Update," prepared by the Risk Assessment Forum for the Office of Health and Environmental Assessment, EPA/625/3-89/016, U.S. EPA Washington, DC.

U.S. Environmental Protection Agency, 1991, "Health Effects Assessment Summary Tables, FY-1991," OERR 9200.6-303(91-1) EPA, Washington, D.C.

U.S. Environmental Protection Agency, 1992a, "Guidance on Risk Characterization for Risk Assessors and Risk Managers," Memorandum dated February 26, 1992.

U.S. Environmental Protection Agency, 1992b, "Health Effects Assessment Summary Tables, Annual Update FY 1992", including Supplement A, July, 1992, Prepared by the Environmental Criteria and Assessment Office, Cincinnati, OH, for the Office of Emergency and Remedial Response, Washington, DC.

U.S. Environmental Protection Agency, 1993a, "Integrated Risk Information System (IRIS)," computer database, EPA, Washington, D.C.

U.S. Environmental Protection Agency, 1993b, "Health Effects Assessment Summary Tables, FY-1993," OERR, EPA, Washington, D.C.

U.S. Environmental Protection Agency, 1994, "Integrated Risk Information System (IRIS)," computer database, EPA, Washington, DC.

Weston, Inc., Roy F., 1987, "Characterization Investigation Study," prepared for Westinghouse Materials Company of Ohio, U.S. Department of Energy Feed Materials Production Center, Fernald, OH.

THIS PAGE INTENTIONALLY LEFT BLANK

APPENDIX A

APPLICABLE OR RELEVANT AND APPROPRIATE REQUIREMENTS (ARARs) AND TO BE CONSIDERED CRITERIA (TBCs)

LIST OF TABLES

Table	Title	Page
A-1	Chemical-Specific Requirements	A-1
A-2	Solid Waste Action-Specific Requirements	A-13
A-3	Radiological Action-Specific Requirements	A-39
A-4	Other Action-Specific Requirements	A-53
A-5	Location-Specific Requirements	A-61

TABLE A-1
CHEMICAL-SPECIFIC REQUIREMENTS

Citation	Chemical	Requirement	Determination	Remarks
		GROUNDWATER PROTECTION STANDARDS		
EPA National Primary Drinking Water Regulations 40 CFR §141.15 and §141.16	MCLs for Radiological Contaminants	The following are maximum contaminant levels for radiological contaminants: Combined radium-226 and -228 . . . . . 5 pCi/L Gross alpha particle activity . . . . . 15 pCi/L (including radium-226 but excluding radon and uranium) Beta and photon radioactivity . . . . . 4 mrem/year from man-made radionuclides	Relevant and Appropriate	OEPA MCLs from OAC 3745-81-15 and -16 are the same as the Federal MCLs.
56 Federal Register 33050 (July 18, 1991)	Proposed MCLs for Radiological Contaminants	The following are the proposed maximum contaminant levels for radiological contaminants: Radium-226 . . . . . 20 pCi/L Radium-228 . . . . . 20 pCi/L Radon-222 . . . . . 300 pCi/L Uranium . . . . . 20 µg/L (30 pCi/L) Beta and photon emitters . . . . . 4 mrem ede/year (excluding radium-228) Adjusted gross alpha emitters . . . . . 15 pCi/L (excluding radium-226, uranium, and radon-222)	TBC	
EPA National Primary Drinking Water Regulations 40 CFR §141.61	MCLs for Organic Contaminants	The following are the maximum contaminant levels for organic contaminants: Benzo(a)pyrene . . . . . 0.0002 mg/L Polychlorinated biphenyls (PCBs) . . . . . 0.0005 mg/L	Relevant and Appropriate	Final MCLs are not presented for contaminants for which the non-zero MCLG is less than or equal to the MCL.
EPA National Primary Drinking Water Regulations 40 CFR §141.51	MCLGs for Inorganic Contaminants	The following are the non-zero maximum contaminant level goals for inorganic contaminants: Antimony . . . . . 0.006 mg/L Beryllium . . . . . 0.004 mg/L	Relevant and Appropriate	

000146

6793
FEMP-OU02 DRAFT
April 8, 1995

TABLE A-1
(Continued)

Citation	Chemical	Requirement	Determination	Remarks
		GROUNDWATER PROTECTION STANDARDS (continued)		
50 Federal Register 46936 (November 13, 1985)	Proposed MCLGs for Inorganic Contaminants	The following are proposed, non-zero, maximum contaminant level goals for inorganic contaminants: Arsenic . . . . . 0.05 mg/L	TBC	
Ohio Drinking Water Regulations OAC 3745-81-11	MCLs for Inorganic Contaminants	The following are the maximum contaminant levels for inorganic contaminants: Arsenic . . . . . 0.05 mg/L	Relevant and Appropriate	Final MCLs are not presented for contaminants for which the non-zero MCLG is less than or equal to the MCL. This MCL is a stricter state standard.
EPA Groundwater Standards for Remedial Actions at Inactive Uranium Processing Sites 40 CFR §192.02(c)(3)(B) Comment No. 37	Groundwater Protection Standards	The concentrations of the following constituents in groundwater must not exceed: Arsenic . . . . . 0.05 mg/L Combined radium-226 and radium-228 . . . . . 5 pCi/L Combined uranium-234 and uranium-238 . . . . . 30 pCi/L Gross alpha particle activity . . . . . 15 pCi/L (excluding radon and uranium)	Relevant and Appropriate	

000147

TABLE A-1
(Continued)

Citation	Chemical	Requirement	Determination	Remarks
		OHIO WATER QUALITY STANDARDS		
Ohio Water Quality Standards OAC 3745-1-21	Use Designation	Paddys Run and the Great Miami River are designated as: • warmwater aquatic life habitat • agricultural and industrial water supply • primary contact recreational use	Applicable	In addition to these overall designations: • Ross Rd. (River Mile (RM) 95.7) to Taylorsville Dam (RM 92.6) is a state resource water • RM 130 and RM 118 are public water supplies The FEMP effluent discharge pipe is located at RM 24.73, downstream of the state resource waters and public water supplies.
Ohio Water Quality Standards OAC 3745-1-07	Warmwater Habitat Water Quality Criteria	Parameter (µg/L) — outside mixing zone Max. / Avg. — inside mixing zone Max. Antimony (total): 650 / 190 / 1,300 Arsenic: 360 / 190 / 720 Beryllium (total): 520 / 23 / 1,000 Dieldrin: - / 0.005 / - Polychlorinated Biphenyls (PCBs): - / 0.001 / -	Applicable	Beryllium is based on a water hardness of 100 mg/L calcium carbonate ($CaCO_3$).
Ohio Water Quality Standards OAC 3745-1-07	Human Health and Agricultural Water Supply Criteria	Parameter (µg/L) — Human Health (outside mixing zone) — Agricultural Antimony (total): 780 / - Arsenic: - / 100 Beryllium (total): 1.17 / 100 Dieldrin: 0.00076 / - Polychlorinated Biphenyls (PCBs): 0.00079 / - Polynuclear Aromatic Hyrdrocarbons (PAHs): 0.31 / -	Applicable	

TABLE A-1
(Continued)

Citation	Chemical	Requirement	Determination	Remarks
		RADIATION DOSE LIMITS		
Radioactive Waste Management DOE Order 5820.2A Chapter III (3)(a)(2)	Protection of the General Population from Releases of Radioactivity	Concentrations of radioactive material which may be released to the general environment in surface water, ground water, soil, plants or animals must not result in an effective dose equivalent that exceeds 25 mrem per year to any member of the public. Reasonable effort should be made to maintain releases of radioactivity in effluents to the general environment as low as is reasonably achievable.	TBC	
Radiation Protection of the Public and the Environment DOE Order 5400.5 Chapter II (1)(a)	Public Dose Limits	The exposure of members of the public to radiation sources as a consequence of all routine DOE activities shall not cause, in a year, an effective dose equivalent greater than 100 mrem. Dose evaluations should reflect realistic exposure conditions. Specific authorization may be received for a temporary increase of the dose limit up to 500 mrem in a year.	TBC	
Radiation Protection of the Public and the Environment DOE Order 5400.5 Chapter II (1)	Public Dose Limits	The public dose limits include consideration of all exposure modes from all DOE activities (including remedial activities). Effective dose equivalent is the sum of the effective dose equivalent (weighted summation of doses to various organs of the body) from exposures to radiation sources external to the body during the year plus the committed effective dose equivalent from radionuclides taken into the body during the year. Medical sources, consumer products, residual fallout from past nuclear accidents and weapons tests and naturally occurring radiation sources are not included in this summation.	TBC	
National Emission Standards for Hazardous Air Pollutants 40 CFR §61.92, 61.93 Subpart H [Radiation Protection of the Public and the Environment DOE Order 5400.5 Chapter II (1)(b)]	National Emissions Standards for Emissions of Radionuclides Other than Radon from DOE Facilities	Emissions of radionuclides (except radon-220 and radon-222) to the ambient air from Department of Energy facilities shall not exceed those amounts that would cause any member of the public to receive in any year an effective dose equivalent of 10 mrem/yr.	Applicable	

0001449

TABLE A-1
(Continued)

Citation	Chemical	Requirement	Determination	Remarks
		RADIATION DOSE LIMITS (continued)		
National Emission Standards for Hazardous Air Pollutants 40 CFR §61.92, 61.93 Subpart H [Radiation Protection of the Public and the Environment DOE Order 5400.5 Chapter II (1)(b)] (continued)	National Emissions Standards for Emissions of Radionuclides Other than Radon from DOE Facilities	To determine compliance with the standard, radionuclide emissions shall be determined and effective dose equivalent values to members of the public calculated using EPA approved sampling procedures, computer models CAP-88 or AIRDOS-PC, or other procedures for which EPA has granted prior approval.	Applicable	
Radiation Protection of the Public and the Environment DOE Order 5400.5 Chapter II (3)(a)(5)	Interim Dose Limit for Native Aquatic Animal Organisms	The absorbed dose to native aquatic animal organisms shall not exceed 1 rad per day from exposure to the radioactive material in liquid wastes discharged to natural waterways.	TBC	
Radiation Protection of the Public and the Environment DOE Order 5400.5 Chapter IV (4)(c)	External Gamma Radiation	External gamma radiation levels on open lands shall comply with the basic public dose limit of 100 mrem effective dose equivalent in a year and the ALARA process, considering appropriate-use scenarios for the area.	TBC	
		EFFLUENT AND AIR EMISSION STANDARDS		
Radiation Protection of the Public and the Environment DOE Order 5400.5 Chapter II (1)(d)	Drinking Water System Standards	It is DOE policy to provide a level of protection for persons consuming water from a public drinking water supply operated by the DOE, either directly or through a DOE contractor, that is equivalent to that provided to the public by the public community drinking water standards of 40 CFR Part 141 (listed above). These systems shall not cause persons consuming the water to receive an effective dose equivalent greater than 4 mrem in a year. Combined Ra-226 and Ra-228 shall not exceed 5×10^{-9} μCi/mL and gross alpha activity (excluding radon and uranium) shall not exceed 1.5×10^{-8} μCi/mL.	TBC	

000150

6793

TABLE A-1
(Continued)

Citation	Chemical	Requirement	Determination	Remarks
		EFFLUENT AND AIR EMISSION STANDARDS (continued)		
Radiation Protection of the Public and the Environment DOE Order 5400.5 Chapter II (1)(d) (continued)	Drinking Water System Standards	The liquid effluents from DOE activities shall not cause private or public drinking water systems downstream of the facility discharge to exceed the drinking water radiological limits in 40 CFR Part 141 (listed above).	TBC	
Radiation Protection of the Public and the Environment DOE Order 5400.5 Chapter III	Derived Concentration Guides for Air and Water	The derived concentration guides (DCGs) are provided as reference values for conducting radiological environmental protection programs at operational DOE facilities and sites. DCG values are presented in Figures III-1 and III-3 of DOE Order 5400.5 for the following exposure modes: • ingestion of water • inhalation of air • immersion in a gaseous cloud The DCG values for internal exposure are based on a committed effective dose equivalent of 100 mrem for the radionuclide taken into the body by ingestion or inhalation during one year. The DCG values account for only three exposure pathways (ingested water <u>or</u> inhaled air <u>or</u> air immersion) and do not include other potentially significant pathways. When more complex environmental pathways are involved, a more complete pathway analysis is required for calculating public radiation doses resulting from the operation of DOE facilities.	TBC	
Radiation Protection of the Public and the Environment DOE Order 5400.5 Chapter II (3)(a)	Discharges of Liquid Waste to Surface Waters	The best available technology is the prescribed level of treatment for liquid radioactive discharges to surface waters that would otherwise contain radioactive concentrations greater than the DCG values. Implementation of the best available technology process is not required for waste streams that contain radionuclide concentrations of not more than the DCG values at the point of discharge to a surface waterway.	TBC	

000151

TABLE A-1
(Continued)

Citation	Chemical	Requirement	Determination	Remarks
		EFFLUENT AND AIR EMISSION STANDARDS (continued)		
Radiation Protection of the Public and the Environment DOE Order 5400.5 Chapter II (3)(a) (continued)	Discharges of Liquid Waste to Surface Waters	The DCG for waste streams containing more than one type of radionuclide shall be the sum of the fractional DCG values.	TBC	
Radiation Protection of the Public and the Environment DOE Order 5400.5 Chapter II (3)(a)(4)	Prevention of Radionuclide Buildup in Sediments	Liquid process waste streams containing radioactive material in the solid present in the waste stream must not exceed 5 pCi/g above background level of settleable solids for alpha-emitting radionuclides or 50 pCi/g above background of settleable solids for beta-gamma-emitting radionuclides.	TBC	
National Emission Standards for Hazardous Air Pollutants 40 CFR §61.192 Subpart Q Comment No. 37	National Emission Standards for Radon Emissions from Department of Energy Facilities	No source at a Department of Energy facility shall emit more than 20 pCi/m²s as an average for the entire source, into the air.	Applicable	
Health and Environmental Protection Standards for Uranium and Thorium Mill Tailings 40 CFR §192.02 (b) Subpart A 40 CFR §192.32 (b)(1)(ii) Subpart D Radiation Protection of the Public and the Environment DOE Order 5400.5 Chapter IV (6)(d)	Control of Radon Emissions	The following standards apply to the: • control of residual radioactive materials from inactive uranium processing sites. • management of uranium byproduct materials after closure of a disposal area. • long-term management of uranium, thorium, and their decay products. Controls shall be designed to provide reasonable assurance that releases of radon-222 from the above materials to the atmosphere will not: • exceed an average annual release rate of 20 pCi/m²s	Relevant and Appropriate	

000152

TABLE A-1
(Continued)

Citation	Chemical	Requirement	Determination	Remarks
		EFFLUENT AND AIR EMISSION STANDARDS (continued)		
Health and Environmental Protection Standards for Uranium and Thorium Mill Tailings 40 CFR §192.02 (b) Subpart A 40 CFR §192.32 (b)(1)(ii) Subpart D Radiation Protection of the Public and the Environment DOE Order 5400.5 Chapter IV (6)(d) (continued)	Control of Radon Emissions	• increase the annual average concentration of radon-222 in air or above any location outside the disposal site by more than 0.5 pCi/L.	Relevant and Appropriate	
National Primary and Secondary Ambient Air Quality Standards 40 CFR §50	National Ambient Air Quality Standards	The following are the primary National Ambient Air Quality Standards (NAAQS): Criteria Pollutant / Primary Standard / Averaging Time Carbon Monoxide: 9 ppm, 8-hour; 35 ppm, 1-hour Lead: 1.5 $\mu g/m^3$, Quarterly average Nitrogen Dioxide: 0.053 ppm, Annual Particulate Matter: 50 $\mu g/m^3$, Annual; 150 $\mu g/m^3$, 24-hour Ozone: 0.12 ppm, 1-hour Sulfur oxides: 0.03 ppm, Annual; 0.14 ppm, 24-hour	Relevant and Appropriate	

TABLE A-1
(Continued)

Citation	Chemical	Requirement	Determination	Remarks
		EFFLUENT AND AIR EMISSION STANDARDS (continued)		
Review of New Sources of Air Toxic Emissions OEPA Proposed Policy January 1994	De Minimis Emission Levels for Carcinogens	The following are the Ohio de minimis emission levels for classes A, B1, and B2 carcinogens: Carcinogen / EPA Class / Emission Level Chromium VI / A / 0.1 ton/year All Others / A, B1, B2 / 1.0 ton/year	TBC	
		RADIONUCLIDE CONCENTRATIONS IN SOILS		
Health and Environmental Protection Standards for Uranium and Thorium Mill Tailings 40 CFR §192.12(a) Subpart B 40 CFR §192.20 Subpart C	Cleanup of Soils Contaminated with Residual Radioactive Materials	Remedial actions shall be conducted so as to provide reasonable assurance that, as a result of residual radioactive materials, the concentration of radium-226 in land averaged over any area of 100 m^2 shall not exceed the background level by more than: • 5 pCi/g, averaged over the first 15 cm of soil below the surface • 15 pCi/g, averaged over 15 cm thick layers of soil more than 15 cm below the surface Compliance with this requirement should be shown through measurements performed within the accuracy of currently available types of field and laboratory instruments in conjunction with reasonable survey and sampling procedures.	Relevant and Appropriate	
Health and Environmental Protection Standards for Uranium and Thorium Mill Tailings 40 CFR §192.21 (f) and §192.22 (b) Subpart C	Supplemental Standards	Where radionuclides other than radium-226 and its decay product are present in sufficient quantity and concentration to constitute a significant radiation hazard from residual radioactive materials, remedial actions shall, in addition to satisfying the standards of 40 CFR §§ 192.02, Subpart A and 192.12, Subpart B (both listed above), reduce other residual radioactivity to levels that are as low as is reasonably achievable.	Relevant and Appropriate	

TABLE A-1
(Continued)

Citation	Chemical	Requirement	Determination	Remarks
		RADIONUCLIDE CONCENTRATIONS IN SOILS (continued)		
Health and Environmental Protection Standards for Uranium and Thorium Mill Tailings 40 CFR §192.32 (b)(2) Subpart D	Management of Uranium Byproduct Material	The requirements for the management of uranium byproduct materials after closure of a disposal area (40 CFR §192.32 (b)(1)) shall not apply to any portion of a disposal site which contains a concentration of radium-226 in land, averaged over areas of $100m^2$, which, as a result of uranium byproduct material, does not exceed the background level by more than the limits specified in 40 CFR §192.12 (a).	Relevant and Appropriate	
Health and Environmental Protection Standards for Uranium and Thorium Mill Tailings 40 CFR §§ 192.40-192.42 Subpart E	Management of Thorium Byproduct Material	The following are requirements for the management of thorium byproduct materials: • the provisions for the management of uranium byproduct material (40 CFR §192.32) shall apply to thorium byproduct material and: - provisions applicable to the element uranium shall also apply to the element thorium - provisions applicable to radon-222 shall also apply to radon-220 - provisions applicable to radium-226 shall also apply to radium-228 With the concurrence of EPA, alternative provisions may be substituted for any of the above requirements provided the alternative provisions will provide at least an equivalent level of protection for human health and environment.	Relevant and Appropriate	
Radiation Protection of the Public and the Environment DOE Order 5400.5 Chapter IV (4)(a)	Guidelines for Residual Radioactive Material	Guidelines for residual concentrations of radionuclides other than thorium and radium shall be derived from the basic dose limits by means of an environmental pathway analysis using specific property data where available. Procedures for these derivations are given in DOE/CH-8901. Residual concentrations of radioactive material in soil are defined as those in excess of background concentrations averaged over an area of 100 m^2.	TBC	

TABLE A-1
(Continued)

Citation	Chemical	Requirement	Determination	Remarks
		RADIONUCLIDE CONCENTRATIONS IN SOILS (continued)		
Radiation Protection of the Public and the Environment DOE Order 5400.5 Chapter IV (4)(a)(2),(3)	Generic Guidelines for Residual Concentrations	The generic guidelines for residual concentrations (in excess of background) of radium-226, radium-228, thorium-230, and thorium-232 are: • 5 pCi/g, averaged over the first 15 cm of soil below the surface; and • 15 pCi/g, averaged over 15-cm-thick layers of soil more than 15 cm below the surface.	TBC	
Radiation Protection of the Public and the Environment DOE Order 5400.5 Chapter IV (4)(a)(2),(3) (continued)	Generic Guidelines for Residual Concentrations	These guidelines take into account ingrowth of radium-226 from thorium-230 and of radium-228 from thorium-232, and assume secular equilibrium. If both thorium-230 and radium-226, or both thorium-232 and radium-228, are present and not in secular equilibrium, the appropriate guideline is applied as a limit for the radionuclide with the higher concentration. If other mixtures of radionuclides occur, the concentrations of individual radionuclides shall be reduced so that either the dose for the mixture will not exceed the basic dose limit or the sum of the ratios of the soil concentration of each radionuclide to the allowable limit for that radionuclide will not exceed 1. Explicit formulas for calculating residual concentrations guidelines for mixtures are given in DOE/CH-8901.	TBC	
Radiation Protection of the Public and the Environment DOE Order 5400.5 Chapter IV (4)(a)(1)	Hot Spots	If the average concentration in any surface or below surface area less than or equal to 25 m^2, exceeds the limit or guideline by a factor of $(100/A)^{0.5}$ [where A is the area (in square meters) of the region in which the concentrations are elevated], limits for "hot spots" shall also be developed and applied. Procedures for calculating these hot spots limits, which depend on the extent of the elevated local concentrations, are given in DOE/CH-8901. In addition, reasonable efforts shall be made to remove any source of radionuclide that exceeds 30 times the appropriate limit in the soil, irrespective of the average concentration in the soil.	TBC	

TABLE A-1
(Continued)

Citation	Chemical	Requirement	Determination	Remarks
RADIONUCLIDE CONCENTRATIONS IN SOILS (continued)				
EPA Guidance Methods for Evaluating the Attainment of Cleanup Standards, Vol. 1	Attainment of Soil Cleanup Standards	This document describes methods for testing whether soil chemical concentrations at a site are statistically below a cleanup standard or ARAR. If it can be reasonably concluded that the remaining soil or treated soil at a site has concentrations that are statistically less than relevant cleanup standards then the site can be judged protective of human health and the environment.	TBC	
LEAD STANDARDS				
Resource Conservation and Recovery Act 40 CFR §268.41	Requirements for Lead Disposal	The maximum concentration of lead in the extract of any sample of treated soil is 5 mg/L.	Relevant and Appropriate	
Revised Interim Soil Lead Guidance for CERCLA Sites and RCRA Corrective Action Facilities (OSWER Directive 9355.4-12) Comment No. 8	Screening Level for Lead in Soil	EPA recommends using 400 ppm soil lead as a screening level for lead in soil for residential scenarios at CERCLA sites and at RCRA Corrective Action sites. Residential areas with soil lead below 400 ppm generally require no further action.	TBC	

000157

TABLE A-2
SOLID WASTE ACTION-SPECIFIC REQUIREMENTS

Citation	Action	Requirement	Determination	Remarks
		DEFINITIONS		
Resource, Conservation, and Recovery Act 42 U.S.C. §6903 (27)	Definition	Solid waste means any garbage, refuse, sludge from a waste treatment plant, water supply treatment plant, or air pollution control facility and other discarded material, including solid, liquid, semisolid, or contained gaseous material resulting from industrial, commercial, mining, and agricultural operations and from community activities, but does not include source, special nuclear, or byproduct material as defined by the Atomic Energy Act of 1954.	Applicable	
Ohio Solid Waste Disposal Regulations OAC 3745-27-01 (B)(40)	Definition	Solid wastes means such unwanted residual solid or semisolid material as results from industrial, commercial, agricultural, and community operations, excluding earth or material from construction, mining, or demolition operations, or other waste materials of the type that would normally be included in demolition debris, nontoxic flyash, spent nontoxic foundry sand, and slag and other substances that are not harmful or inimical to public health, and includes, but is not limited to, garbage, tires, combustible and noncombustible material, street dirt, and debris. Solid waste does not include any material that is an infectious waste or a hazardous waste. For the purpose of this definition, "semisolid material" does not contain liquids which can be readily released under normal climatic conditions, as determined by method 9095 (paint filter liquids test) in SW-846: "Test Methods for Evaluating Solid Wastes, Physical/Chemical Methods".	Applicable	
Resource, Conservation, and Recovery Act 40 CFR §261.3(a)	Definition	A solid waste is a hazardous waste, if: • it is not excluded from regulation as a hazardous waste under 40 CFR §261.4(b). • it exhibits any of the characteristics of hazardous waste. • it is listed in 40 CFR §§ 261.30 - 261.35. • it is a mixture of solid and hazardous wastes.	Applicable	

TABLE A-2
(Continued)

Citation	Action	Requirement	Determination	Remarks
		DEFINITIONS (continued)		
Ohio Infectious Waste Regulations OAC 3745-27-01 (B)(15) OAC 3745-27-30 (A),(E),(H) ORC 3734.021 (A)(1)(c),(d)	Definition	Infectious waste is defined by 9 categories of waste including human blood specimens and blood products, sharp wastes used in the treatment or inoculation of human beings, and any other waste materials generated in the diagnosis, treatment, or immunization of human beings. A generator who places all sharp infectious wastes and all unused hypodermic needles, syringes, and scalpel blades into a "SHARPS" container before they are transported and who generates less than 50 lbs. of infectious wastes each month and does not hold a certificate of registration as a generator of infectious wastes may transport and dispose of infectious wastes in the same manner as solid wastes. Treated infectious wastes can be transported and disposed in the same manner as noninfectious waste. Infectious waste that is also radioactive shall be managed in accordance with applicable Ohio Department of Health and U.S. Nuclear Regulatory Commission regulations.	Applicable	
Resource, Conservation, and Recovery Act 40 CFR §261.4(b)(4)	Definition	Flyash waste, bottom ash waste, slag waste, and fly gas emission control waste, generated primarily from the combustion of coal or other fossil fuels, are excluded from the definition of hazardous waste.	Applicable	
Ohio Petroleum Contaminated Soil Policy OEPA Policy PP 01 03 200	Definition	The basis of the "contained in" policy is that environmental media, such as soil or groundwater, are not considered to be waste material. Because they are not a solid waste, the mixture rule, as set forth in OAC 3745-51-03, does not apply when they become contaminated with a listed hazardous waste but only contains the waste. The result of this policy is that if the waste constituents can be removed, the soil is no longer considered to contain a hazardous waste. Therefore, since soil is not a waste material it does not have to be de-listed in order for it to be used for its intended purpose. However, as long as the soil contains the waste material, it must be managed as a hazardous waste.	TBC	

6793

TABLE A-2
(Continued)

Citation	Action	Requirement	Determination	Remarks
		DEFINITIONS (continued)		
Ohio Petroleum Contaminated Soil Policy OEPA Policy PP 01 03 200 (continued)	Definition	If we apply this concept to petroleum-contaminated soil, the soils containing a petroleum hydrocarbon would not need to be managed as a solid waste if the contaminants were removed.	TBC	
CERCLA Compliance with Other Laws Manual Section 2.7	Definition	Placement/disposal of waste does not occur under the following circumstances: • waste is consolidated within a unit (including an area of contamination that can be viewed as a single unit); • waste is capped in place, including grading prior to capping; • waste is treated in situ; and • waste is processed within the unit in order to improve its structural stability for closure or for movement of equipment over the area.	TBC	
Resource, Conservation, and Recovery Act 40 CFR §260.10	Definition	Remediation waste means all solid and hazardous waste, and all media (including groundwater, surface water, soils, and sediments) and debris, which contain listed hazardous wastes or which themselves exhibit a hazardous waste characteristic, that are managed for the purpose of implementing corrective action requirements under 40 CFR §264.101 and RCRA section 3008(h). For a given facility, remediation wastes may originate only from within the facility boundary, but may include waste managed in implementing RCRA sections 3004(v) or 3008 (h) for releases beyond the facility boundary.	Relevant and Appropriate	

001160

TABLE A-2
(Continued)

Citation	Action	Requirement	Determination	Remarks
		DEFINITIONS (continued)		
Resource, Conservation, and Recovery Act 40 CFR §264.552 (a),(c)	Definition	For the purpose of implementing corrective action for solid waste management units, the Regional Administrator may designate an area at the facility as a corrective action management unit (CAMU). One or more CAMU's may be designated at a facility. • Placement of remediation wastes into or within a CAMU does not constitute land disposal of hazardous wastes. • Consolidation or placement of remediation wastes into or within a CAMU does not constitute creation of a unit subject to minimum technology requirements. • The CAMU shall facilitate the implementation of reliable, effective, protective, and cost-effective remedies. • Waste management activities associated with the CAMU shall not create unacceptable risks to humans or to the environment resulting from exposure to wastes. • The CAMU shall include uncontaminated areas of the facility only if including such areas for the purpose of managing remediation waste is more protective than management of such wastes at contaminated areas of the facility. • Areas within the CAMU, where wastes remain in place after closure of the CAMU, shall be managed and contained so as to minimize future releases, to the extent practicable. • The CAMU shall expedite the timing of remedial activity implementation, when appropriate and applicable. • The CAMU shall enable the use, when appropriate, of treatment technologies (including innovative technologies) to enhance the long-term effectiveness of remedial actions by reducing the toxicity, mobility, or volume of wastes that will remain in place after closure of the CAMU.	Relevant and Appropriate	Under all of the remedial alternatives, any hazardous waste from the firing range is being sent off-site for disposal. This CAMU rule would only be used if Operable Unit 5 plans to dispose hazardous waste in a centralized disposal cell; the cell would then have to be designed to meet RCRA standards and it would not be cost-effective to send the firing range material off-site for disposal. Because this is dependent on Operable Unit 5, the RCRA disposal requirements will be addressed in Operable Unit 5 ARARs.

000161

6793

TABLE A-2
(Continued)

Citation	Action	Requirement	Determination	Remarks
		DEFINITIONS (continued)		
Resource, Conservation, and Recovery Act 40 CFR §264.552 (a),(c) (continued)	Definition	• The CAMU shall, to the extent practicable, minimize the land area of the facility upon which wastes will remain in place after closure of the CAMU.	Relevant and Appropriate	
Resource, Conservation, and Recovery Act 40 CFR §264.553 (a),(b)	Definition	For temporary tanks and container storage areas used for treatment or storage of remediation wastes during remedial activities, the Regional Administrator may determine that a design, operating, or closure standard applicable to such units may be replaced by alternative requirements which are protective of human health and the environment. Any temporary unit to which alternative requirements are applied shall be: • located within the facility boundary; and • used solely for treatment or storage of remediation wastes.	Relevant and Appropriate	
		SOLID WASTE DISPOSAL		
Ohio Solid Waste Disposal Regulations OAC 3745-27-05 (A)	Solid Waste Disposal Methods	Solid waste shall be disposed of only by the following methods: • sanitary landfill • incineration • composting Methods not mentioned above and not prohibited by this chapter, OAC 3745-27, may be used provided that such methods are demonstrated to the satisfaction of the Director to be capable of disposing of solid waste without creating a nuisance or a health hazard, without causing water pollution, and without violating these regulations and any regulation adopted by the Director pursuant to Ohio Revised Code Chapter 3704 (Air Pollution Control).	Applicable	

TABLE A-2
(Continued)

Citation	Action	Requirement	Determination	Remarks
		SOLID WASTE DISPOSAL (continued)		
US EPA Solid Waste Disposal Regulations 40 CFR §257.3-7	Open Burning Prohibited	The solid waste disposal facility or practice shall not engage in open burning of residential, commercial, institutional, or industrial solid waste. This requirement does not apply to land-clearing debris, diseased trees, debris from emergency clean-up operations, and ordnance.	Applicable	
US EPA Solid Waste Disposal Regulations 40 CFR §257.3-3	Surface Water	A solid waste disposal facility shall not cause a discharge of pollutants into waters of the United States that is in violation of the requirements of the NPDES under section 402 of the Clean Water Act, as amended. A solid waste disposal facility shall not cause a discharge of dredged material or fill material to waters of the United States that is in violation of the requirements under section 404 of the Clean Water Act, as amended. A solid waste disposal facility or practice shall not cause non-point source pollution of waters of the United States that violates applicable legal requirements implementing an area-wide or Statewide water quality management plan that has been approved by the Administrator under section 208 of the Clean Water Act, as amended.	Applicable	
US EPA Solid Waste Disposal Regulations 40 CFR §257.3-4	Groundwater Protection	A solid waste disposal facility or practice shall not contaminate an underground drinking water source beyond the solid waste boundary.	Applicable	
Ohio Solid Waste Disposal Regulations OAC 3745-27-08 (C)(1),(2),(3),(4),(5),(6),(7),(9)	Landfill Construction	The following layers must be installed in the construction of a sanitary landfill (from bottom to top):	Applicable	This applies to new disposal of solid waste.
		Recompacted Soil Liner		
		The recompacted soil liner shall be: • constructed using loose lifts 8 inches thick with a maximum permeability of 1×10^{-7} cm/s. • constructed of a soil with a maximum clod size of 3 inches or half the lift thickness, whichever is less.		

6793

TABLE A-2
(Continued)

Citation	Action	Requirement	Determination	Remarks
		SOLID WASTE DISPOSAL (continued)		
Ohio Solid Waste Disposal Regulations OAC 3745-27-08 (C)(1),(2),(3),(4),(5),(6),(7),(9) (continued)	Landfill Construction	• constructed of soil with: - 100% of the particles having a maximum dimension not greater than 2 inches. - not more than 10% of the particles, by weight, having a dimension greater than 0.75 inches. - not less than 50% of the particles, by weight, passing through the 200-mesh sieve. - not less than 25% of the particles, by weight, having a maximum dimension not greater than 0.002 millimeters. • compacted to at least 95% of the maximum "Standard Proctor Density" using ASTM D-698 or at least 90% of the maximum "Modified Proctor Density" using ASTM D-1557. • compacted at a moisture content at or wet of optimum. Alternatives for the above requirements may be used if it is demonstrated to the satisfaction of the Director that the materials and techniques will result in each lift having a maximum permeability of 1×10^{-7} cm/s. Additionally, the recompacted soil liner shall: • not comprised of solid waste. • be constructed using the same number of passes and lift thickness, and the same or similar type and weight of compaction equipment established by testing (as defined in this table). • be placed on the bottom and exterior excavated sides of the landfill and have a minimum bottom slope of 2% and a maximum slope based on: - compaction equipment limitations;	Applicable	

TABLE A-2
(Continued)

Citation	Action	Requirement	Determination	Remarks
		SOLID WASTE DISPOSAL (continued)		
Ohio Solid Waste Disposal Regulations OAC 3745-27-08 (C)(1),(2),(3),(4),(5),(6),(7),(9) (continued)	Landfill Construction	- slope stability; - maximum friction angle between any soil-geosynthetic interface and between any geosynthetic-geosynthetic interface; and - resistance of geosynthetics and geosynthetic seams to tensile forces. • constructed on a prepared surface that shall: - be free of debris, foreign material, and deleterious material; - be able to bear the weight of the landfill and its construction operations without causing or allowing a failure of the liner to occur through settling; and - not have any abrupt changes in grade that may result in damage to geosynthetics. • be at least 5 feet thick, although the Director may approve an alternate thickness, to be no less than 3 feet, based upon the result of calculations or on a design that is no less protective of human health and the environment. • be at least 3 feet thick with a geosynthetic clay liner that meets the specifications in paragraph (C)(3) of this rule although the Director may approve an alternate thickness to be no less than 1½ feet, based upon the results of calculations or on a design that is no less protective of human health and the environment. • have a factor of safety for hydrostatic uplift not less than 1.4. • be adequately protected from damage due to desiccation, freeze/thaw cycles, wet/dry cycles, and the intrusion of objects during construction and operation.	Applicable	

TABLE A-2
(Continued)

Citation	Action	Requirement	Determination	Remarks
		SOLID WASTE DISPOSAL (continued)		
Ohio Solid Waste Disposal Regulations OAC 3745-27-08 (C)(1),(2),(3),(4),(5),(6),(7),(9) (continued)	Landfill Construction	**Flexible Membrane Liner** The flexible membrane liner shall be: • placed on the recompacted soil liner. • sixty mil high density polyethylene (HDPE). • be protected from the drainage layer by a cushion layer, as required by the Director Other materials or thicknesses may be used if, at a minimum, the flexible membrane liner meets all the following: • negligibly permeable to fluid migration. • physically and chemically resistant to chemical attack by the solid waste, leachate, or other materials which may come in contact with the flexible membrane liner. • seamed to allow no more than negligible amounts of leakage with seaming material that is physically and chemically resistant to chemical attack by the solid waste, leachate, or other materials which may come in contact with the seams. • have properties for its installation and use which are acceptable to the Director. • protected from the drainage layer by a cushion layer, as required by the Director. • have a minimum thickness of 40 mils. **Geosynthetic Clay Liner** The geosynthetic clay liner used in lieu of part of the recompacted soil liner shall be:	Applicable	

000166

6793
FEMP-OU02-4 DRAFT
April 8, 1995

TABLE A-2
(Continued)

Citation	Action	Requirement	Determination	Remarks
		SOLID WASTE DISPOSAL (continued)		
Ohio Solid Waste Disposal Regulations OAC 3745-27-08 (C)(1),(2),(3),(4),(5),(6),(7),(9) (continued)	Landfill Construction	• negligibly permeable to fluid migration. • be installed to allow no more than negligible amounts of leakage by a minimum overlap of 6 inches, or, for end of panel seams, a minimum over of 12 inches. Overlap shall be increased in accordance with manufacturers specifications or to account for shrinkage due to weather conditions. • have a bentonite mass per unit area of at least 1 pound per square foot. • be installed in accordance with the manufacturers specifications in regards to handling, overlap, and the use of granular or powdered bentonite to enhance bonding at the seams. • be constructed above the recompacted soil liner.	Applicable	
		Leachate Management System		
		The leachate management system shall: • be designed to prevent clogging and crushing of the system and to limit the level of leachate in areas other than lift stations to a maximum of 1 foot. • include a drainage layer placed on top of the flexible membrane liner composed of granular material that must: - have a minimum permeability of 1×10^{-3} cm/s; - have a minimum thickness of 1 foot; - have a negligible amount of fines; and - not contain carbonate material. An alternate material and/or thickness may be used if it is demonstrated to the satisfaction of the Director that the material meets the requirements.		

TABLE A-2
(Continued)

Citation	Action	Requirement	Determination	Remarks
		SOLID WASTE DISPOSAL (continued)		
Ohio Solid Waste Disposal Regulations OAC 3745-27-08 (C)(1),(2),(3),(4),(5),(6),(7),(9) (continued)	Landfill Construction	• include leachate collection pipes to remove leachate from the bottom of the landfill. The pipes must: - be imbedded in the drainage layer; - have a minimum slope of 0.5%; - have lengths and configuration which shall not exceed the capabilities of clean-out devices; - be provided with access for clean-out devices which shall be protected from differential settling; - have joints sealed to prevent separation; and - be physically and chemically resistant to attack by the solid waste, leachate, or other materials that they may come in contact with. Sealing material and means of access for clean-out devices shall also be physically and chemically resistant to attack by the solid waste, leachate, or other materials that they may come in contact with. An alternate means for leachate removal may be used if it is demonstrated to the satisfaction of the Director that the means for leachate removal meets the requirements. • include a filter layer to prevent clogging of the leachate collection system. • include a protective layer to protect the recompacted soil liner, flexible membrane liner, geosynthetic clay liner (if applicable), and leachate collection system from the intrusion of objects during construction and operation.	Applicable	

TABLE A-2
(Continued)

Citation	Action	Requirement	Determination	Remarks
		SOLID WASTE DISPOSAL (continued)		
Ohio Solid Waste Disposal Regulations OAC 3745-27-08 (C)(1),(2),(3),(4),(5),(6),(7),(9) (continued)	Landfill Construction	• include lift stations which are to be protected from adverse effects from leachate and differential settling. If manholes are used as lift stations, they must be equipped with automatic high level alarms located no greater than 6 feet above the invert of the leachate inlet pipe. Lift station pipes should be of adequate capacity and shall automatically commence pumping before the leachate elevation activates the high level alarm.	Applicable	
		Leachate Collection and Storage		
		Any leachate conveyance and storage structures located outside the limits of solid waste placement shall be no less protective of the environment than the landfill facility, as determined by the Director, and: • The structures must be monitored, as required by the Director. • Storage tanks must be provided with spill containment • Leachate lines must be double-cased • Storage structures must have a minimum of 1 week of storage capacity using design assumptions simulating final closure. • If at any time leachate is evaluated to be hazardous in accordance with rule 3745-52-11 of the OAC, it shall be managed in accordance with Chapters 3745-50 to 3745-69 of the OAC, and the generator standards for storage shall apply in accordance with Chapter 3745-52 of the OAC.		

TABLE A-2
(Continued)

Citation	Action	Requirement	Determination	Remarks
		SOLID WASTE DISPOSAL (continued)		
Ohio Solid Waste Disposal Regulations OAC 3745-27-08 (C)(1),(2),(3),(4),(5),(6),(7),(9) (continued)	Landfill Construction		Applicable	
		Surface Water Control		
		• Any permanent or temporary surface water control structures shall be designed to accommodate, by non-mechanical means, the peak flow from the 25-year/24-hour storm event. • Surface water control structures shall be designed to minimize silting and scouring. • If sedimentation ponds are used, they shall be designed and constructed according to OAC 3745-27-08 (C)(6)(b).		
		Benchmarks		
		• At least 3 permanent third order benchmarks on separate sides of the landfill facility shall be within easy access to the limits of solid waste placement and shall be constructed in accordance with OAC 3745-27-08(C)(7)(a)-(c).		
		Groundwater Control		
		• Any permanent groundwater control structures shall adequately control groundwater infiltration through the use of non-mechanical means such as impermeable barriers or permeable drainage structures. • No permanent groundwater control structures may be used to dewater an aquifer system, except if the recharge and discharge zone of the aquifer system are located entirely within the boundary of the landfill facility.		

000170

TABLE A-2
(Continued)

Citation	Action	Requirement	Determination	Remarks
		SOLID WASTE DISPOSAL (continued)		
EPA Criteria for Municipal Solid Waste Landfills 40 CFR §258.40	Landfill Design Criteria	The liner and leachate system shall be designed and constructed to maintain less than a 30-cm depth of leachate over the liner. The geomembrane must be at least 30-mil thick.	Relevant and Appropriate	
EPA Criteria for Municipal Solid Waste Landfills 40 CFR §258.26	Run-On/Run-Off Control Systems	The landfill shall have: • a run-on control system to prevent flow onto the active portion of the landfill during the peak discharge from a 25-year storm. • a run-off control system from the active portion of the landfill to collect and control at least the water volume resulting from a 24-hour, 25-year storm.	Relevant and Appropriate	
Ohio Solid Waste Disposal Regulations OAC 3745-27-08 (D) and (E)	Landfill Construction	Prior to being used in the construction of the recompacted soil liner and drainage layer of the sanitary landfill or the landfill cap, the following characteristics of the earthen materials must be determined to show that the material is suitable for use in construction of the landfill.	Applicable	
		Soil Material Specifications		
		The following tests shall be performed on representative samples at least once for every 1,500 yd^3 of soil except the recompacted permeability test, which shall be performed at least once for every 10,000 yd^3 of soil. • recompacted permeability at construction specifications; • moisture content and density using an approved ASTM method; • grain size distribution using ASTM D-422 for sieve and hydrometer methods; and • Atterberg limits using ASTM D-4318.		

000174

6793
DEMP-OU024 DRAFT
April 8, 1995

TABLE A-2
(Continued)

Citation	Action	Requirement	Determination	Remarks
		SOLID WASTE DISPOSAL (continued)		
Ohio Solid Waste Disposal Regulations OAC 3745-27-08 (D) and (E) (continued)	Landfill Construction	**Granular Drainage Material Specifications** The following tests shall be performed at least once for every 3,000 yd^3 of material. • permeability; • grain size distribution using ASTM D-422 for the sieve method; and • chemical compatibility testing may be required by the Director. **Geosynthetic Material Specifications** Geosynthetics, other synthetic materials, and joint sealing compounds used in the construction of the flexible membrane liner, geosynthetic clay liner, and leachate management system for a sanitary landfill facility or a sanitary landfill cap system shall be shown to: • be physically and chemically resistant to attack by the solid waste, leachate, or other materials that they may come in contact with using USEPA Method 9090 or other documented data. • have properties acceptable for installation and use.	Applicable	
Ohio Solid Waste Disposal Regulations OAC 3745-27-08 (C)(1)(m),(o) and (C)(2)(g)	Landfill Construction	The following activities must be performed to ensure that the components of the sanitary landfill facility meet the specifications of this rule.	Applicable	

TABLE A-2
(Continued)

Citation	Action	Requirement	Determination	Remarks
		SOLID WASTE DISPOSAL (continued)		
Ohio Solid Waste Disposal Regulations OAC 3745-27-08 (C)(1)(m),(o) and (C)(2)(g) (continued)	Landfill Construction	**Test Pads** The recompacted soil liner and the recompacted soil barrier layer in the cap system shall be modeled by the construction of test pads. The test pads shall: • be designed such that the proposed tests are appropriate and their results are valid. • be constructed to establish the construction details which are necessary to obtain sufficient compaction to satisfy the permeability requirement. The construction details include: - lift thickness; - water content necessary to achieve the desired compaction; and - type, weight, and number of passes of construction equipment. • be constructed prior to the construction of the sanitary landfill component which the test pad will model. • be constructed whenever there is a significant change in soil material properties. • have a minimum width three times the width of the compaction equipment, and a minimum length two times the length of compaction equipment, including power equipment and any attachments. • be comprised of at least four lifts.	Applicable	

TABLE A-2
(Continued)

Citation	Action	Requirement	Determination	Remarks
		SOLID WASTE DISPOSAL (continued)		
Ohio Solid Waste Disposal Regulations OAC 3745-27-08 (C)(1)(m),(o) and (C)(2)(g) (continued)	Landfill Construction	• be tested for field permeability, following the completion of test pad construction. For each lift a minimum of 3 tests for moisture content and density shall be performed. • be reconstructed as many times as necessary to meet the permeability requirement. Any amended construction details shall be noted. An alternative to test pads may be used if it is demonstrated to the satisfaction of the Director that the alternative meets the requirements.	Applicable	
		Moisture Content and Density Testing		
		Moisture content and density testing of the recompacted soil liner and recompacted soil barrier in the cap system shall be performed at a frequency of no less than 5 tests per acre per lift. Any penetrations shall be repaired using methods acceptable to the Director.		
		Flexible Membrane Liner Testing		
		• For the purpose of testing every seaming apparatus in use each day, peel and shear tests shall be performed on scrap pieces of flexible membrane liner at the beginning of the seaming period and every four hours thereafter. • Nondestructive testing shall be performed on 100% of the flexible membrane liner seams. • Destructive testing for peel and shear shall be performed at least once for every 500 feet of seam length. An alternate means may be used if it is demonstrated to the satisfaction of the Director that the alternate means meets the requirements.		

TABLE A-2
(Continued)

Citation	Action	Requirement	Determination	Remarks
		SOLID WASTE DISPOSAL (continued)		
Ohio Solid Waste Disposal Regulations OAC 3745-27-08 (G)	Landfill Construction	All tests failing to meet the specifications outlined above must be investigated and the areas reconstructed to meet specifications.	Applicable	
Ohio Solid Waste Disposal Regulations OAC 3745-27-08 (F)	Landfill Construction	The following testing procedures shall be included in a Quality Assurance/Quality Control Plan: • sampling and testing procedures to be used in the field and in the laboratory; • testing frequency; • parameters and sample locations; • procedures to be followed if a test fails; • the management structure and the experience and training of the testing personnel; and • contingency plan for anticipated construction difficulties. The following components shall be included in a Quality Assurance/Quality Control Plan: • in-situ foundation preparation; • recompacted soil and/or geosynthetic clay liner system; • flexible membrane liner; • leachate management system; • cap system; • permanent ground water control structures; and • explosive gas control/extraction systems.	Applicable	

000125

TABLE A-2
(Continued)

Citation	Action	Requirement	Determination	Remarks
		SOLID WASTE DISPOSAL (continued)		
Ohio Solid Waste Disposal Regulations OAC 3745-27-19 (E)(19)	Sanitary Landfill Operation	To demonstrate that the solid wastes to be received at the landfill facility will not compromise the integrity of any material used to construct the landfill facility, the Director may require chemical compatibility testing to be performed.	Applicable	
Ohio Solid Waste Disposal Regulations OAC 3745-27-19 (E)(26)	Sanitary Landfill Operation	The integrity of the engineered components of the landfill facility shall be maintained and any damage to, or failure or, the components shall be repaired.	Applicable	
Ohio Solid Waste Disposal Regulations OAC 3745-27-19 (J)(1), (4)	Sanitary Landfill Operations	Surface water shall be diverted from areas where solid waste is being, or has been, deposited. The facility shall be designed, constructed, maintained, and provided with surface water control structures, as necessary, to control run-on and run-off of surface water to ensure minimal infiltration of water through the cover material and cap system, and minimal erosion of the cover material and cap system. If ponding or erosion occurs on areas of the landfill facility where solid waste is being, or has been, deposited, action will be taken to correct the conditions causing the ponding or erosion.	Applicable	
Ohio Solid Waste Disposal Regulations OAC 3745-27-19 (K)(1)	Sanitary Landfill Operations	If leachate is detected on the surface of the landfill facility, then the outbreak(s) shall be repaired and: • leachate shall be contained and properly managed at the sanitary landfill facility. • if necessary, leachate shall be collected and disposed in accordance with paragraph (K)(5) and (K)(6) of OAC 3745-27-19. • actions shall be taken to minimize, control, or eliminate the conditions which contribute to the production of leachate.	Applicable	
Ohio Solid Waste Disposal Regulations OAC 3745-27-19 (K)(2)	Sanitary Landfill Operations	At least one lift station back-up pump shall be kept at the sanitary waste landfill facility at all times.	Applicable	

TABLE A-2
(Continued)

Citation	Action	Requirement	Determination	Remarks
		SOLID WASTE DISPOSAL (continued)		
Ohio Solid Waste Disposal Regulations OAC 3745-27-19 (K)(3)	Sanitary Landfill Operations	The collection pipe network of the leachate management system shall be inspected after placement of the initial lift of waste to ensure that crushing has not occurred and shall be inspected annually thereafter to ensure that clogging has not occurred.	Applicable	
Ohio Solid Waste Disposal Regulations OAC 3745-27-19 (K)(4)	Sanitary Landfill Operations	If authorized by the Director, leachate may be temporarily stored within the limits of solid waste placement until the leachate can be treated and disposed.	Applicable	
Ohio Solid Waste Disposal Regulations OAC 3745-27-10	Groundwater Monitoring Program	The groundwater monitoring system for detection monitoring, assessment monitoring, or corrective measures shall consist of a sufficient number of wells, installed at appropriate locations and depths, to yield groundwater samples from both the uppermost aquifer system and any significant zones of saturation that exist above the uppermost aquifer system that: • represent the quality of the background groundwater that has not been affected by past or present operations; and • represent the quality of the groundwater passing directly downgradient of the limits of solid waste placement. The groundwater monitoring program shall include consistent sampling and analysis procedures and statistical methods that are protective of human health and the environment and that are designed to ensure monitoring results that provide an accurate presentation of groundwater quality at the background and downgradient well. If contamination from the landfill is discovered, corrective measures shall be taken.	Applicable	

TABLE A-2
(Continued)

Citation	Action	Requirement	Determination	Remarks
		SOLID WASTE DISPOSAL (continued)		
Ohio Solid Waste Disposal Regulations OAC 3745-27-11 (H)	Final Closure of Landfill Facilities	At final closure of a landfill facility: • all land surfaces shall be graded to prevent ponding of water where solid waste has been placed. Drainage facilities shall be provided to direct surface water from the landfill facility. • a groundwater monitoring system shall be designed and installed in accordance with OAC 3745-27-10, if a system is not already in place.	Applicable	
Ohio Solid Waste Disposal Regulations OAC 3745-27-11 (O)	Final Closure of Landfill Facilities	Closure of the sanitary landfill facility must be completed in a manner that minimizes the need for further maintenance and minimizes post-closure formation and release of leachate and explosive gases to air, soil, groundwater, or surface water to the extent necessary to protect human health and the environment.	Applicable	
Ohio Solid Waste Disposal Regulations OAC 3745-27-08 (C)(15)	Construction of a Landfill Cap System	A composite cap system which shall minimize infiltration, must be constructed in all areas of solid waste placement: • The cap system shall have a slope of between 5% and 25% or some greater slope based on stability analyses. • The cap system shall have a maximum projected erosion rate of 5 tons/acre/year. • Any penetrations into the cap system shall be sealed so that the integrity of the soil barrier layer is maintained. The cap system shall, at a minimum, consist of the following (from bottom to top): **Recompacted Soil Barrier Layer** The recompacted soil barrier layer of the cap shall be:	Applicable	

000178

6793

TABLE A-2
(Continued)

Citation	Action	Requirement	Determination	Remarks
		SOLID WASTE DISPOSAL (continued)		
Ohio Solid Waste Disposal Regulations OAC 3745-27-08 (C)(15) (continued)	Construction of a Landfill Cap System	• a minimum of 18 inches thick and constructed in accordance with the specifications outlined above for construction of the recompacted soil liner for a landfill facility ((C)(1)(a) to (C)(1)(g) and (C)(1)(m) to (C)(1)(o) of OAC 3745-27-08) with the exception that the maximum permeability of the recompacted soil barrier shall be $1x10^{-6}$ cm/sec; <u>OR</u> • a geosynthetic clay liner of equal or less permeability as the recompacted soil barrier layer, with an engineered subgrade constructed in accordance with the following requirements: • The thickness of the subgrade shall be sufficient to achieve an evenly graded surface and shall be a minimum of 12 inches. • Be constructed of a soil with 100% of the particles have a maximum dimension not greater than 2 inches and with not more than 10% of the particles, by weight, having a dimension greater than 0.75 inches. • Be compacted to at least 95% of the maximum "Standard Proctor Density" using ASTM D-698 or at least 90% of the maximum "Modified Proctor Density" using ASTM D-1557. • After being smooth-rolled, the surface shall not have sharp edged or protruding particles. • The particle size and proctor density required shall be verified by tests performed on representative samples based on the variability and homogeneity of the material, but no less than a minimum of once for every 5,000 cubic yards of material used in the engineered subgrade.	Applicable	

000179

TABLE A-2
(Continued)

Citation	Action	Requirement	Determination	Remarks
		SOLID WASTE DISPOSAL (continued)		
Ohio Solid Waste Disposal Regulations OAC 3745-27-08 (C)(15) (continued)	Construction of a Landfill Cap System	• Field density testing shall be performed at a frequency not less than 5 tests per acre. Any penetrations in the subgrade as a result of the testing must be repaired using bentonite or a bentonite-soil mixture.	Applicable	
		Flexible Membrane Liner		
		The flexible membrane liner for the cap system shall be constructed on top of the soil barrier layer or geosynthetic clay liner in accordance with the specifications listed above for a flexible membrane liner for a landfill facility [OAC 3745-27-08 (C)(2)].		
		Drainage Layer		
		The drainage layer shall be: • a minimum of 1 foot of granular material; OR • a drainage net that has equivalent performance capabilities as the granular material. • constructed on top of the flexible membrane liner in accordance with the specifications outlined above for the drainage layer included in the leachate management system of a sanitary landfill facility ((C)(4)(a) of 3745-27-08 of the OAC).		
		Frost Protection Layer		
		The frost protection layer shall be: • placed on top of the drainage layer. • a minimum of 30 inches thick.		

TABLE A-2
(Continued)

Citation	Action	Requirement	Determination	Remarks
		SOLID WASTE DISPOSAL (continued)		
Ohio Solid Waste Disposal Regulations OAC 3745-27-08 (C)(15) (continued)	Construction of a Landfill Cap System	If the drainage layer is constructed with granular material instead of a drainage net, the drainage layer may be used as part of the frost protection layer.	Applicable	
		Soil Vegetative Layer		
		The soil vegetative layer shall: • consist of soil and vegetation placed on top of the frost protection layer. • have soil of sufficient thickness and fertility to support its vegetation and to protect the recompacted soil barrier layer and flexible membrane liner from damage due to root penetration. • have healthy grasses or other vegetation that form a complete and dense vegetative cover. Soil from the frost protection layer may be used as a part of the vegetative layer. Comparable materials and/or thicknesses for the soil barrier layer, the granular drainage layer, and the soil vegetative layer may be used if approved by the Director.		
Ohio Solid Waste Disposal Regulations OAC 3745-27-11 (H)(5)(b)	Final Closure of Landfill Facilities	A notation must be recorded on the deed to the sanitary landfill facility property, or on some other instrument which is normally examined during title search, that will in perpetuity notify any potential purchaser of the property that the land has been used as a sanitary landfill facility. The notation shall include information describing acreage, exact location, depth, volume, and nature of the solid waste deposited in the sanitary landfill facility.	Applicable	

TABLE A-2
(Continued)

Citation	Action	Requirement	Determination	Remarks
SOLID WASTE DISPOSAL (continued)				
Ohio Solid Waste Disposal Regulations OAC 3745-27-14 (A)(1), (2)	Sanitary Landfill Post-Closure Care	Following completion of final closure activities in accordance with rule 3745-27-11 of the OAC, post-closure care activities shall be conducted at the sanitary landfill facility for a minimum of 30 years. Post-closure care activities for all sanitary landfill facilities shall include, but are not limited to: • continuing operation and maintenance of the leachate management system, the surface water management system, any explosive gas extraction and/or control system, any explosive gas monitoring system, and the groundwater monitoring system • maintaining the integrity and effectiveness of the cap system, including making repairs to the cap system as necessary to correct the effects of settling, dead vegetation, subsidence, erosion, leachate outbreaks, or other events, and preventing run-on and run-off from eroding or otherwise damaging the cap system	Applicable	
EPA Criteria for Municipal Solid Waste Landfills 40 CFR §258.61	Post-Closure Care	The Director of Ohio EPA may allow the owner or operator to stop managing leachate if the owner or operator demonstrates that leachate no longer poses a threat to human health and the environment.	Relevant and Appropriate	
POLYCHLORINATED BIPHENYL (PCB) DISPOSAL				
PCB Manufacturing, Processing, Distribution, and Use Prohibitions 40 CFR §761.3	Excluded PCB Materials	PCB materials which appear at concentrations less than 50 ppm are excluded from the PCB disposal requirements in this regulation.	Relevant and Appropriate	Operable Unit 2 does not contain PCB materials which have a concentration greater than 50 ppm.

000182

6793
FEMP-OU02-4 DRAFT
April 8, 1995

TABLE A-2
(Continued)

Citation	Action	Requirement	Determination	Remarks
		ASBESTOS MANAGEMENT AND DISPOSAL		
National Emission Standard for Asbestos 40 CFR §61.151 (a) Ohio Asbestos Handling Regulations OAC 3745-20-07 (A),(C)	Inactive Asbestos Waste Disposal Sites	Each owner or operator of an inactive asbestos waste disposal site shall do one of the following: • discharge no visible emissions from an inactive waste disposal site; • cover the asbestos-containing waste material with at least 6 inches of compacted nonasbestos-containing material and grow and maintain a cover of vegetation on the area adequate to prevent exposure of the asbestos-containing waste material; or • cover the asbestos-containing waste material with at least 2 feet of compacted nonasbestos-containing material, and maintain the cover to prevent exposure of the asbestos-containing waste material. The owner or operator may use an alternative control method that has received prior approval of the Administrator.	Federal Relevant and Appropriate, Ohio Applicable	The Federal requirement is relevant and appropriate because it specifically applies to a type of facility that is not found in Operable Unit 2. The Ohio requirement is generally applicable to any inactive asbestos waste disposal site.

TABLE A-3
RADIOLOGICAL ACTION-SPECIFIC REQUIREMENTS

Citation	Action	Requirement	Determination	Remarks
		DEFINITIONS		
Atomic Energy Act 42 U.S.C. §2014 (e)(2), (ee) Nuclear Waste Policy Act 42 U.S.C. §10101 (12), (16),(23)	Definition	The term low-level waste means radioactive material that is not: • high-level radioactive waste, the highly radioactive material resulting from the reprocessing of spent nuclear fuel, including liquid waste produced directly in reprocessing and any solid material derived from such liquid waste that contains fission products in sufficient concentrations. • spent nuclear fuel, fuel that has been withdrawn from a nuclear reactor following irradiation, the constituent elements of which have not been separated by reprocessing. • transuranic waste, material contaminated with elements that have an atomic number greater than 92, including neptunium, plutonium, americium, and curium, and that are in concentrations greater than 10 nanocuries per gram. • byproduct material, the tailings or wastes produced by the extraction or concentration of uranium or thorium from any ore processed primarily for its source material content.	Applicable	
Radiation Protection of the Public and the Environment DOE Order 5400.5 Chapter IV	Definition	Residual radioactive material is defined as: • residual concentrations of radionuclides in soil (soil is defined as unconsolidated earth material, including rubble and debris that might be present in the earth material); • concentrations of airborne radon decay products; • external gamma radiation; • surface contamination; and • radionuclide concentrations in air or water resulting from, or associated with, any of the above.	TBC	

000184

6793
FEMP-OU02-4 DRAFT
April 8, 1995

TABLE A-3
(Continued)

Citation	Action	Requirement	Determination	Remarks
		DEFINITIONS (continued)		
Radioactive Waste Management DOE Order 5820.2A Chapter III (3)(i)(6) Attachment 2 (1)	Definition	Radioactive material that is below regulatory concern is a definable amount of low-level waste that can be deregulated with minimal risk to the public. Waste containing amounts of radionuclides below regulatory concern, as defined by Federal regulations, may be disposed without regard to radioactivity content.	TBC	
		DOE ALARA POLICY		
Radiation Protection of the Public and the Environment DOE Order 5400.5 Chapter I (4) and Chapter II (2)	As Low As Reasonably Achievable (ALARA) Process	The order adopts the ALARA process in planning and carrying out all DOE activities. ALARA requires judgement with respect to what is reasonably achievable. Factors that relate to societal, technological, economic, and other public policy considerations shall be evaluated to the extent practicable. Factors to be considered, at a minimum, shall include: • maximum dose to members of the public; • collective dose to the population; • alternative processes, such as alternative treatment of discharge streams, operating methods, or controls; • doses for each process alternative; • cost for each of the technological alternatives; • examination of the changes in cost among alternatives; and • changes in societal impact associated with process alternatives (e.g., differential doses from various pathways).	TBC	

001085

TABLE A-3
(Continued)

Citation	Action	Requirement	Determination	Remarks
DOE ALARA POLICY (continued)				
Radiation Protection of the Public and the Environment DOE Order 5400.5 Chapter I (4) and Chapter II (2) (continued)	As Low As Reasonably Achievable (ALARA) Process	Except for meeting requirements of NEPA, qualitative analyses are acceptable, in most instances, for ALARA judgements, especially when the potential doses are well below the dose limit. The bases for these judgements should be documented. More detailed analyses should be considered if the decision might result in doses that approach the limit.	TBC	
GENERAL RADIOACTIVE MATERIALS DISPOSAL REQUIREMENTS				
Radiation Protection of the Public and the Environment DOE Order 5400. 5 Chapter II (3)(b)	Discharges of Liquid Waste to Aquifers and Phaseout of Soil Columns	New or increased discharges of radionuclides in liquid waste to active soil columns and virgin soil columns is prohibited.	TBC	
MANAGEMENT OF LOW-LEVEL RADIOACTIVE WASTE				
Radioactive Waste Management DOE Order 5820.2A Chapter III (3)(a)	Performance Objectives of Low-Level Radioactive Waste Management	DOE low-level radioactive waste shall be managed to accomplish the following performance objectives: • protection of public health and safety; • protection of the public and the environment from releases of radioactivity (see chemical-specific requirements for radioactive dose limitations); and • protection of groundwater resources, consistent with Federal, State, and local requirements.	TBC	
Radioactive Waste Management DOE Order 5820.2A Chapter III (3)(c)	Low-Level Radioactive Waste Generation	Technical and administrative controls shall be directed to reducing the gross volume of waste generated and/or the amount of radioactivity requiring disposal. Waste reduction efforts shall include consideration of process modification, process optimization, materials substitution, and decontamination.	TBC	

000186

6793
FEMP-OU02-4 DRAFT
April 8, 1995

TABLE A-3
(Continued)

Citation	Action	Requirement	Determination	Remarks
MANAGEMENT OF LOW-LEVEL RADIOACTIVE WASTE (continued)				
Radioactive Waste Management DOE Order 5820.2A Chapter III (3)(c) (continued)	Low-Level Radioactive Waste Generation	All DOE low-level waste generators shall establish auditable programs to assure that the amount of low-level waste generated and/or shipped for disposal is minimized. Each DOE low-level waste generator shall separate uncontaminated waste from low-level waste to facilitate cost effective treatment and disposal. Each DOE low-level waste generator preparing a design for a new process or process change shall incorporate principles into the design that will minimize the generation of low-level waste.	TBC	
Radioactive Waste Management DOE Order 5820.2A Chapter III (3)(d)	Waste Characterization	Low-level waste shall be characterized with sufficient accuracy to permit proper segregation, treatment, storage, and disposal. This characterization shall ensure that, upon generation after processing, the actual physical and chemical characteristics and major radionuclide content are recorded and known during all stages of the waste management process. Waste characterization data shall be recorded on a waste manifest and shall include: • the physical and chemical characteristics of the waste; • volume of the waste (total of waste and any solidification or absorbent media); • weight of the waste (total of waste and any solidification or absorbent media); • major radionuclides and their concentrations; and • packaging date, package weight, and external volume.	TBC	These requirements will apply when low-level radioactive waste is transported off-site for disposal.

TABLE A-3
(Continued)

Citation	Action	Requirement	Determination	Remarks
MANAGEMENT OF LOW-LEVEL RADIOACTIVE WASTE (continued)				
Radioactive Waste Management DOE Order 5820.2A Chapter III (3)(f)	Waste Treatment	Waste shall be treated by appropriate methods so that the disposal site can meet the performance objectives stated above. Waste treatment techniques such as incineration, shredding, and compaction to reduce volume and provide more stable waste forms shall be implemented as necessary to meet performance requirements. Use of waste treatment techniques to increase the life of the disposal facility and improve long-term facility performance, by improved site stability and reduction of infiltrating water, is required to the extent it is cost effective. The development of large scale waste treatment facilities shall be supported by the appropriate National Environmental Policy Act documentation. Operation of waste treatment facilities shall be supported by adequate documentation.	TBC	
Radioactive Waste Management DOE Order 5820.2A Chapter III (3)(g)	Waste Shipment	The volume of waste and number of shipments of low-level wastes shall be minimized and the shipments will be conducted based on plans developed by field organizations. Generators shall provide an annual forecast in the third quarter of the fiscal year to the field organizations managing the off-site disposal facility to which the waste is to be shipped. Generators must receive advance approval from the receiving facility and shall certify prior to shipment that waste meets the receiving facility waste acceptance criteria. The certification program shall be auditable and able to withstand independent review.	TBC	
Radioactive Waste Management DOE Order 5820.2A Chapter III (3)(i)(1)-(6)	Waste Disposal	Low-level waste shall be disposed of by methods appropriate to achieve the performance objectives stated in paragraph 3a (listed above), consistent with the radiation dose limits in paragraph 3b (see chemical-specific requirements).	TBC	

000188

TABLE A-3
(Continued)

Citation	Action	Requirement	Determination	Remarks
MANAGEMENT OF LOW-LEVEL RADIOACTIVE WASTE (continued)				
Radioactive Waste Management DOE Order 5820.2A Chapter III (3)(i)(1)-(6) (continued)	Waste Disposal	Engineered modifications (stabilization, packaging, burial depth, barriers) for specific waste types and for specific waste compositions for each disposal site shall be developed to achieve the performance objectives. Site specific waste classification limits may be developed if operationally useful in determining how specific wastes should be stabilized and packaged for disposal. Disposition of waste designated as greater than class C, as defined in 10 CFR §61.55, must be handled as a special case. Disposal systems for such waste must be justified by a specific performance assessment through the NEPA process and with the concurrence of DOE headquarters. The following are additional disposal requirements intended either to improve stability of the disposal site or to facilitate handling and provide protection of the health and safety of personnel at the disposal site: • Waste must not be packaged for disposal in cardboard or fiberboard boxes, unless such boxes meet DOT requirements and contain stabilized waste with a minimum of void space. For all types of containers, void spaces within the waste and between the waste and its packaging shall be reduced as much as practical. • Liquid wastes, or wastes containing free liquid, must be converted into a form that contains as little freestanding and noncorrosive liquid as is reasonable achievable, but, in no case, shall the liquid exceed 1 percent of the volume of the waste when the waste is in a disposal container, or 0.5 percent of the volume of the waste processed to a stable form. • Waste must not be readily capable of detonation or of explosive decomposition or reaction at normal pressures and temperatures, or of explosive reaction with water.	TBC	

000189

TABLE A-3
(Continued)

Citation	Action	Requirement	Determination	Remarks
MANAGEMENT OF LOW-LEVEL RADIOACTIVE WASTE (continued)				
Radioactive Waste Management DOE Order 5820.2A Chapter III (3)(i)(1)-(6) (continued)	Waste Disposal	• Waste must not contain, or be capable of generating quantities of toxic gases, vapors, or fumes harmful to persons transporting, handling, or disposing of the waste. This does not apply to radioactive gaseous waste packaged as identified in the next requirement. • Waste in a gaseous form must be packaged at a pressure that does not exceed 1.5 atmospheres at 20°C. • Waste must not be pyrophoric. Pyrophoric materials contained in waste shall be treated, prepared, and packaged to be nonflammable.	TBC	
Radioactive Waste Management DOE Order 5820.2A Chapter III (3)(i)(8)	Disposal Facility and Disposal Site Design	Design criteria shall be established prior to selection of new disposal facilities, new disposal sites, or both. These design criteria shall be based on analyses of physiographic, environmental, and hydrogeological data to assure that the policy and requirements of this Order can be met. The criteria shall be also based on assessments of projected waste volumes, waste characteristics, and facility and disposal site performance. Disposal units will be designed consistent with disposal site hydrology, geology, and waste characteristics and in accordance with NEPA.	TBC	
Radioactive Waste Management DOE Order 5820.2A Chapter III (3)(i)(9)	Disposal Facility Operations	Operating procedures for low-level waste disposal facilities shall be developed so that they: • protect the environment, health and safety of the public, and facility personnel; • ensure the security of the facility; • minimize the need for long-term control; and • meet the requirements of the closure/post-closure plan. Permanent identification markers for disposal excavations and monitoring wells shall be emplaced.	TBC	

TABLE A-3
(Continued)

Citation	Action	Requirement	Determination	Remarks
MANAGEMENT OF LOW-LEVEL RADIOACTIVE WASTE (continued)				
Radioactive Waste Management DOE Order 5820.2A Chapter III (3)(i)(9) (continued)	Disposal Facility Operations	Operating procedures shall include training for disposal facility operating personnel, emergency response plans, and a system of reporting unusual occurrences to DOE. Waste placement into disposal units should minimize voids between containers. Operations are to be conducted so that active waste disposal operations will not have an adverse effect on filled disposal units.	TBC	
Radioactive Waste Management DOE Order 5820.2A Chapter III (3)(j)	Disposal Site Closure/Post Closure	Site-specific comprehensive closure plans shall be developed for new and existing operating low-level waste disposal sites. The plan shall address closure of disposal sites within a 5-year period after each is filled and shall conform to the requirements of the NEPA process. Performance objectives for existing disposal sites shall be developed on a case-by-case basis as part of the NEPA process. During closure and post closure, residual radioactivity levels for surface soils shall comply with existing DOE decommissioning guidelines. Corrective measures shall be applied to new disposal sites or individual disposal units if conditions occur or are forecasted that could jeopardize attainment of the performance objectives of this Order. Inactive disposal facilities, disposal sites, and disposal units shall be managed in conformance with RCRA, CERCLA, and the Superfund Amendments and Reauthorization Act (SARA). Closure plans for new and existing operating low-level waste disposal facilities shall be reviewed and approved by the appropriate field organization.	TBC	

TABLE A-3
(Continued)

Citation	Action	Requirement	Determination	Remarks
MANAGEMENT OF LOW-LEVEL RADIOACTIVE WASTE (continued)				
Radioactive Waste Management DOE Order 5820.2A Chapter III (3)(j) (continued)	Disposal Site Closure/Post Closure	Termination of monitoring and maintenance activity at closed facilities or sites shall be based on an analysis of site performance at the end of the institutional control period.	TBC	
Radioactive Waste Management DOE Order 5820.2A Chapter III (3)(k)	Environmental Monitoring	Each low-level waste treatment, storage, and disposal facility shall be monitored by an environmental monitoring program that, at a minimum, meets the following requirements: • The program shall be designed to measure: - operational effluent releases; - migration of radionuclides; - disposal unit subsidence; and - change in disposal facility and disposal site parameters which may affect long-term site performance. • Based on the characteristics of the facility being monitored, the program may include, but not necessarily be limited to, monitoring surface soil, air, surface water, and, in the subsurface, soil and water, both in the saturated and the unsaturated zones. • The monitoring program shall be capable of detecting changing trends in performance sufficiently in advance to allow application of any necessary corrective action prior to exceeding performance objectives. The monitoring program shall be able to ascertain whether or not effluents from each treatment, storage, or disposal facility or disposal site meet the requirements of applicable EH Orders.	TBC	

TABLE A-3
(Continued)

Citation	Action	Requirement	Determination	Remarks
		LOW-LEVEL RADIOACTIVE WASTE CONFINEMENT		
General Design Criteria DOE Order 6430.1A 1324-5.3	Low-Level Solid Waste Confinement	Low-level solid waste that is disposed to the ground shall be confined by a site-specific system of barriers that may include, but not necessarily be limited to, waste form, waste packaging, and the geologic setting. When site permeability characteristics do not provide the required confinement capabilities, the confinement system shall be augmented by the following: • constructing low permeability walls around the low-level waste; • lining the walls and bottom of the excavated area with low permeability material; and • other suitable methods for reducing permeability. Means shall be provided to minimize contact of emplaced low-level waste with water. Active water control measures shall not be required following permanent closure. Typical requirements for water control are as follows: • placing a layer of highly permeable material beneath the low-level waste to channel any percolating water to a sump; • mounding the soil surface to facilitate surface water runoff; • use of a suitable low-permeability cover material (e.g., clay) over the disposal area to prevent contact of the waste by infiltrating rainwater. This cover material shall be protected by a layer of overburden (e.g., sand, gravel, top soil). • a site diversion system for surface water runoff during operation of the facility; • temporary protective covers (e.g., tarpaulin) before the completion of the natural in-place soil barrier over the low-level waste;	TBC	

TABLE A-3
(Continued)

Citation	Action	Requirement	Determination	Remarks
LOW-LEVEL RADIOACTIVE WASTE CONFINEMENT (continued)				
General Design Criteria DOE Order 6430.1A 1324-5.3 (continued)	Low-Level Solid Waste Confinement	• revegetation of the overburden layer; and • other suitable and reliable means for minimizing water contact with low-level waste.	TBC	
General Design Criteria DOE Order 6430.1A 1324-6	Radioactive Solid Waste Confinement Systems	The following requirements outline the confinement system for radioactive solid waste: • Primary confinement consists of process systems equipment and its associated ventilation and off-gas system, storage containers, or other waste and site-specific engineered barriers. • Secondary confinement consists of process cell barriers and the ventilation systems associated with the cells or building, or a large storage building or structure. In some cases, a drum, cask, or other waste and site-specific engineered barrier shall provide secondary confinement. • The natural geologic setting composes the tertiary confinement system. In addition, the tertiary confinement system shall meet the following performance objectives: • Following permanent closure, on-going site maintenance shall not be needed. • In the absence of unplanned natural processes or human contact with a low-level waste disposal facility, calculated contaminant levels in groundwater at the site boundary shall not exceed the maximum contaminant levels (MCLs) established pursuant to the Safe Drinking Water Act (see chemical-specific requirements).	TBC	

000194

TABLE A-3
(Continued)

Citation	Action	Requirement	Determination	Remarks
LOW-LEVEL RADIOACTIVE WASTE CONFINEMENT (continued)				
General Design Criteria DOE Order 6430.1A 1324-6 (continued)	Radioactive Solid Waste Confinement Systems	• In the event of human-induced activities following permanent closure, or reasonably foreseeable but unplanned natural processes, the guidelines of DOE Order 6430.1A, Section 1300-1.4.2, Accidental Releases, shall not be violated. Institutional controls may be relied on for a limited time following closure. For the purposes of calculation, these controls shall not be relied on for more than 100 years following permanent closure.	TBC	
CONTROL OF URANIUM AND THORIUM BYPRODUCT MATERIAL				
Health and Environmental Protection Standards for Uranium and Thorium Mill Tailings 40 CFR §192.02 (a) Subpart A	Control of Residual Radioactive Materials	Controls of residual radioactive materials from inactive uranium processing sites shall be designed to be effective for up to 1,000 years, to the extent reasonably achievable, and in any case, for at least 200 years.	Relevant and Appropriate	
Health and Environmental Protection Standards for Uranium and Thorium Mill Tailings 40 CFR §192.20 Subpart C	Implementation	Reasonable assurance to show compliance with 40 CFR §192.02 (Subpart A) standards should be done through the use of analytical models and site-specific analyses.	Relevant and Appropriate	
Health and Environmental Protection Standards for Uranium and Thorium Mill Tailings 40 CFR §192.32 (b)(1)(i) Subpart D	Management of Uranium Byproduct Material	Disposal areas for the management of uranium byproduct materials after closure shall each comply with the closure performance standard in 40 CFR §264.111 with respect to nonradiological hazards and shall be designed to provide reasonable assurance of control of radiological hazards to be effective for 1,000 years, to the extent reasonable, and, in any case, for at least 200 years	Relevant and Appropriate	

TABLE A-3
(Continued)

Citation	Action	Requirement	Determination	Remarks
CONTROL OF URANIUM AND THORIUM BYPRODUCT MATERIAL (continued)				
Health and Environmental Protection Standards for Uranium and Thorium Mill Tailings 40 CFR §§ 192.40-192.42 Subpart E	Management of Thorium Byproduct Material	The provisions for the management of uranium byproduct material (40 CFR §192.32) shall apply to thorium byproduct material and provisions applicable to the element uranium shall also apply to the element thorium	Relevant and Appropriate	
MANAGEMENT OF RESIDUAL RADIOACTIVE MATERIAL				
Radiation Protection of the Public and the Environment DOE Order 5400.5 Chapter II (5)	Release of Property	Real property (land and structures), personal property, materials, and equipment shall be released if the concentration of radioactivity is within the limits of residual radioactive contamination.	TBC	
Radiation Protection of the Public and the Environment DOE Order 5400.5 Chapter IV (6)	Control of Residual Radioactive Material Above the Guidelines	Residual radioactive material with concentrations above the generic guidelines (see chemical-specific requirements) shall be managed in accordance with Chapter II, Requirements for Radiation Protection of the Public and the Environment, and operational and control requirements.	TBC	
Radiation Protection of the Public and the Environment DOE Order 5400.5 Chapter IV (6)(d)	Long-Term Management of Residual Radioactive Material	To properly manage uranium, thorium, and their decay products, access to a property and use of on-site materials contaminated by residual radioactive material should be controlled through appropriate administrative and physical controls such as those described in 40 CFR 192. These controls should be designed to be effective to the extent reasonable for at least 200 years.	TBC	
Radiation Protection of the Public and the Environment DOE Order 5400.5 Chapter IV (7)	Supplemental Limits and Exceptions for Residual Radioactive Material	If special specific property circumstances indicate that the concentration guidelines or authorized limits are not appropriate, supplemental limits or an exception may be requested to those guidelines or limits.	TBC	

THIS PAGE INTENTIONALLY LEFT BLANK.

000197

TABLE A-4
OTHER ACTION-SPECIFIC REQUIREMENTS

Citation	Action	Requirement	Determination	Remarks
		AIR POLLUTION CONTROL		
Ohio General Provisions on Air Pollution Control OAC 3745-15-07 ORC 3704.01-.05	Prevention of Air Pollution Nuisance	Measures shall be taken to adopt and maintain a program for the prevention, control, and abatement of air pollution in order to protect and enhance the quality of the state's air resource so as to promote the public health, welfare, and economic vitality of the people of the state. The emission or escape into open air from any source whatsoever of smoke, ashes, dust, dirt, grime, acids, fumes, gases, vapors, odors, and combinations of the above in such a manner or in such amounts as to endanger the health, safety, or welfare of the public or to cause unreasonable injury or damage to property shall be declared to be a public nuisance. It is unlawful for any person to cause, permit, or maintain any such public nuisance.	Applicable	
Ohio Permit to Install New Sources of Pollution OAC 3745-31-05 (A)(3) Comment No. 39	Best Available Technology (BAT)	The installation or modification and operation of an air contaminant source must employ the best available technology.	Relevant and Appropriate	
Ohio Ambient Air Quality Standards OAC 3745-17-02 OAC 3745-17-05 Comment No. 37	Particulate Ambient Air Quality Standards	The level of the primary and secondary 24-hour ambient air quality standards for total suspended particulates is 150 $\mu g/m^3$, 24-hour average concentration. The level of the primary and secondary annual standards for total suspended particulates in 50 $\mu g/m^3$, annual arithmetic mean. The significant and avoidable deterioration of air quality in any part of the area where presently existing air quality is equal to or better than the particulate ambient air quality standards shall be prohibited.	Applicable	
Ohio Particulate Matter Standards OAC 3745-17-07	Control of Visible Particulate Emissions from Stationary Sources	Visible particulate emissions from any stack shall not exceed 20 percent opacity, as a six-minute average. Transient exceedance limits are included in this regulation.	Applicable	

000198

TABLE A-4
OTHER ACTION-SPECIFIC REQUIREMENTS

Citation	Action	Requirement	Determination	Remarks
		AIR POLLUTION CONTROL (continued)		
Ohio Emissions of Particulate Matter OAC 3745-17-07(B)(4),(5),(6) Comment No. 37	Control of Visible Particulate Emissions	There shall be no visible particulate emissions from any paved roadway or parking area except for a period of time not to exceed six minutes during any sixty-minute observation period. There shall be no visible particulate emissions from any unpaved roadway, parking area, or material storage piles except for a period of time not to exceed thirteen minutes during any sixty-minute observation period.	Applicable	
Ohio Emissions of Particulate Matter OAC 3745-17-08	Restriction of Emission of Fugitive Dust	No person shall cause or permit any fugitive dust source to be operated; or any materials to be handled, transported or stored; or a building or its appurtenances or a road to be used constructed, altered, repaired or demolished without taking or installing reasonably available control measures to prevent fugitive dust from becoming airborne. Such reasonably available control measure shall include, but not be limited to, one or more of the following which are appropriate to minimize or eliminate visible particulate emissions of fugitive dust: • the use of water or other suitable dust suppression chemicals for the control of fugitive dust from the demolition of existing buildings or structures, construction operations, the grading or roads or the clearing of land; or • the periodic application of asphalt, oil, water, or other suitable dust suppression chemicals on dirt or gravel roads and parking lots, and any other surfaces which cause emissions of fugitive dust.	Relevant and Appropriate	This requirement is applicable only to certain cities in Butler and Hamilton Counties.
Ohio Particulate Matter Standards OAC 3745-17-11 Comment No. 38	Restrictions on Particulate Emissions	The following are restrictions for particulates from any operation, process, or activity which releases or may release particulate emissions into the ambient air. These limits are based on the weight of material being processed.	Applicable	

TABLE A-4
(Continued)

Citation	Action	Requirement	Determination	Remarks
AIR POLLUTION CONTROL (continued)				
Ohio Particulate Matter Standards OAC 3745-17-11 (continued) Comment No. 38	Restrictions on Particulate Emissions	Process Weight at Maximum Capacity lb/hr. — Allowable Rate of Particulate Emission lb/hr. 100 — 0.551 200 — 0.877 400 — 1.40 600 — 1.83 800 — 2.22 1000 — 2.58	Applicable	
Standard of Performance for Nonmetallic Mineral Processing Plants 40 CFR §60.672 (a),(d),(e) Comment No. 38	Restrictions on Particulate Emissions From Crushers	No owner or operator shall cause to be discharged into the atmosphere from a crusher any emissions which: • contain particulate matter in excess of 0.05 grams per dry cubic meter at standard conditions (g/dscm); and • exhibit greater than 7 percent opacity Truck dumping of nonmetallic minerals into any crusher is exempt from these requirements.	Relevant and Appropriate	
WATER POLLUTION CONTROL				
National Pollutant Discharge Elimination System 40 CFR §122.26 (a)(1)(ii) 40 CFR §122.26 (b)(14)(v),(x)	Storm Water Discharge Associated with Industrial Activity	A discharge composed entirely of storm water associated with industrial activity is required to obtain a NPDES permit. These categories of facilities are considered to be engaging in "industrial activity": • landfills, land application sites, and open dumps that receive or have received any industrial wastes (waste that is received from any of the facilities described under this subsection) including those that are subject to regulation under subtitle D of RCRA; and	Applicable	Engineering controls will be implemented to monitor and control stormwater runoff during removal, treatment, and disposal of Operable Unit 2 material.

TABLE A-4
(Continued)

Citation	Action	Requirement	Determination	Remarks
		WATER POLLUTION CONTROL (continued)		
National Pollutant Discharge Elimination System 40 CFR §122.26 (a)(1)(ii) 40 CFR §122.26 (b)(14)(v),(x) (continued)	Storm Water Discharge Associated with Industrial Activity	• construction activity including clearing, grading, and excavation activities that disturbs 5 acres or more of total land area.	Applicable	
Clean Water Act §404 (33 U.S.C. §1344) Guidelines for Specifications of Disposal Sites for Dredged or Fill Material 40 CFR §230.10	Discharge of Dredged or Fill Material	No discharge of dredged or fill material shall be permitted: • if there is a practicable alternative to the proposed discharge which would have less adverse impact on the aquatic ecosystem, so long as, the alternative does not have other significant adverse environmental consequences. • unless appropriate and practicable steps have been taken which will minimize potential adverse impacts of the discharge on the aquatic ecosystem. No discharge of dredged or fill material shall be permitted if it: • causes or contributes, after consideration of disposal site dilution and dispersion, to violations of any applicable state water quality standard. • violates any applicable toxic effluent standard or prohibition under section 307 of the Clean Water Act. • jeopardizes the continued existence of species listed as endangered or threatened under the Endangered Species Act of 1973, as amended, or results in likelihood of the destruction or adverse modification or a habitat which is determined to be a critical habitat under the Endangered Species Act of 1973, as amended.	Applicable	

6793

TABLE A-4
(Continued)

Citation	Action	Requirement	Determination	Remarks
WATER POLLUTION CONTROL (continued)				
Clean Water Act Nationwide Permit Program 33 U.S.C. §1341(a)(1),(d) 33 CFR §330.1 (c)	Nationwide Permits - Terms and Conditions	An activity is authorized under an NWP only if that activity and the permittee satisfy all of the following NWPs terms and conditions. Potentially applicable NWPs include: • Nationwide Permit #26 - Headwaters and Isolated Waters Discharges - The discharge does not cause the loss of more than 10 acres of waters of the United States. - The permittee notifies the district engineer if the discharge would cause the loss of waters of the United States greater than one acre. - For discharges in special aquatic sites, including wetlands, the notification must also include a delineation of affected special aquatic sites, including wetlands. - The discharge, including all attendant features, both temporary and permanent, is part of a single and complete project. • Nationwide Permit #38 - Cleanup of Hazardous and Toxic Waste - This permit authorizes specific activities required to effect the containments, stabilization or removal of hazardous or toxic waste materials that are performed ordered, or sponsored by a government agency with established legal or regulatory authority provided the permittee notifies the district engineer. - For discharges in special aquatic sites, including wetlands, the notification must also include a delineation of affected special aquatic sites, including wetlands.	Applicable	In a January 17, 1992 letter to the U.S. Army Corps of Engineers, OEPA conditionally certified that projects authorized by these Nationwide Permits will comply with the applicable provisions of the Federal Water Pollution Control Act.

000202

TABLE A-4
(Continued)

Citation	Action	Requirement	Determination	Remarks
WATER POLLUTION CONTROL (continued)				
Clean Water Act Nationwide Permit Program 33 U.S.C. §1341(a)(1),(d) 33 CFR §330.1 (c) (continued)	Nationwide Permits - Terms and Conditions	- This nationwide permit does not authorize the establishment of new disposal sites or the expansion of existing sites used for the disposal of hazardous or toxic waste.	Applicable	
Clean Water Act Nationwide Permit Program 33 CFR §330.4 (c)(1) Ohio Section 401 Water Quality Certifications OAC 3745-32	Nationwide Permits - Terms and Conditions	State 401 water quality certification pursuant to section 401 of the Clean Water Act, or waiver thereof, is required prior to the issuance or reissuance of individual or nationwide permits authorizing activities which may result in a discharge into waters of the United States	Applicable	
Clean Water Act General Regulatory Policies 33 CFR §323.3	Permits for Discharges of Dredged or Fill Material	Permits will be required for the discharge of dredged or fill material into waters of the United States including wetlands. Certain discharges specified in 33 CFR Part 330 are permitted by that regulation (nationwide permits). If a discharge of dredged or fill material is not permitted by 33 CFR Part 330 (Nationwide Permits), an individual section 404 permit will be required for the discharge of dredged or fill material into waters of the United States. Discharges of dredged or fill material into waters of the United States done by or on behalf of any Federal agency, other than the Corps of Engineers, are subject to the authorization procedures of these regulations.	Applicable	
Ohio Water Pollution Control Regulations ORC 6111.04	Acts of Pollution Prohibited	No person shall cause pollution or place or cause to be placed any sewage, industrial waste, or other wastes in a location where they cause pollution of any waters of the state.	Applicable	

TABLE A-4
(Continued)

Citation	Action	Requirement	Determination	Remarks
WATER POLLUTION CONTROL (continued)				
Ohio Water Pollution Control Regulations ORC 6111.04 (continued)	Acts of Pollution Prohibited	No person to whom a permit has been issued shall place or discharge, or cause to be placed or discharged, in any waters of the state any sewage, industrial waste, or other wastes in excess of the permissive discharges specified under such existing permit without first receiving a permit from the Director to do so.	Applicable	
NOISE POLLUTION CONTROL				
Noise Control Act 42 U.S.C. §4901, *et seq.* Noise Pollution and Abatement Act 42 U.S.C. §7641 Comment No. 37	Noise Pollution Control	The public must be protected from noises that jeopardize health and welfare.	Applicable	

000204

THIS PAGE INTENTIONALLY LEFT BLANK.

000205

TABLE A-5
LOCATION-SPECIFIC REQUIREMENTS

Citation	Location	Requirement	Determination	Remarks
THREATENED AND ENDANGERED SPECIES PROTECTION				
Procedures for Implementing the National Environmental Policy Act 40 CFR §6.302(h) Endangered and Threatened Wildlife and Plants 50 CFR §17.21,§17.94 Interagency Cooperation-Endangered Species Act 50 CFR §402.01 Comment No. 37	Endangered Species and Critical Habitat	All Federal agencies must insure that any action authorized, funded, or carried out by them is not likely to jeopardize the continued existence of any listed species or result in the destruction or adverse modification of the constituent elements essential to the conservation of a listed species within a defined critical habitat.	Applicable	In 1994, surveys were conducted for potential threatened or endangered plant species; no individuals were found. In 1993 and 1994, surveys have verified the presence of the state-threatened Sloan's crayfish [*Orconectes sloanii*] in Paddys Run. Suitable habitat for the Indiana bat [*Myotis sodalis*], a federally-listed endangered species, also exists on the Fernald property.
Interagency Cooperation-Endangered Species Act 50 CFR §402.12 (a),(b) Comment No. 37	Biological Assessment	A biological assessment shall evaluate the potential effects of the action on listed and proposed critical habitat and determine whether any such species or habitat are likely to be adversely affected by the action and is used in determining whether formal consultation or a conference is necessary. These procedures are required for Federal actions that are "major construction activities".	Applicable	No critical habitat is present on the Fernald property.
Ohio Endangered Species Regulations ORC 1531.25	Endangered Animal Species	No person shall take or possess any native species of wild animal, or any eggs or offspring thereof, that is threatened with state-wide extinction.	Applicable	See first remark.
Ohio Endangered Species Regulations ORC 1518.02 OAC 1501:18-1	Endangered Plant Species	No person shall root up, injure, destroy, remove, or carry away on or from public highways, public property, or waters of the state, or on or from the property of another, without the written permission of the owner, lessee, or other person entitled to possession, any endangered or threatened plant listed in OAC 1501:18-1.	Applicable	See first remark.

000206

TABLE A-5
(Continued)

Citation	Location	Requirement	Determination	Remarks
THREATENED AND ENDANGERED SPECIES PROTECTION (continued)				
Classification of Solid Waste Disposal Facilities and Practices 40 CFR §257.3-2	Any	Solid waste disposal facilities or practices shall not cause or contribute to the taking of any endangered or threatened species of plants, fish, or wildlife. Solid waste disposal facilities or practices shall not result in the destruction or adverse modification of the critical habitat of endangered or threatened species as identified in 50 CFR Part 17.	Applicable	See first remark.
HISTORIC AND CULTURAL RESOURCE PROTECTION				
Antiquities Act of 1906 16 U.S.C. §431 Comment No. 37	Antiquity Preservation	No person may appropriate, excavate, injure, or destroy any historic or prehistoric ruin or monument, or any object of antiquity situated or controlled by the Government of the United States.	Applicable	An assessment of the Operable Unit 2 waste units was performed in March 1993 and it was determined that the areas had already been sufficiently disturbed so that there would be no requirement to consult the State Historic Preservation Officer (SHPO). Archaeological investigations will be conducted for the disposal facility study area. Any other proposed areas of disturbance for Operable Unit 2 remedial actions will be surveyed and the SHPO consulted as necessary.
Archaeological Resources Protection Act 16 U.S.C. §47099 Procedures for Implementing the National Environmental Policy Act 40 CFR §6.301(c) Protection of Archaeological Resources 43 CFR §7.4(a)	Archaeological Resource Recovery and Preservation	Whenever any Federal agency finds, or is notified, in writing, by an appropriate historical or archaeological authority, that its activities in connection with any Federal construction project or federally licensed project, activity, or program may cause irreparable loss or destruction of significant scientific prehistorical, historical, or archaeological data, such agency shall notify the Secretary of the Interior, in writing, and shall provide the Secretary with appropriate information concerning the project, program, or activity.	Applicable	See above remark.

TABLE A-5
(Continued)

Citation	Location	Requirement	Determination	Remarks
HISTORIC AND CULTURAL RESOURCE PROTECTION (continued)				
Archaeological Resources Protection Act 16 U.S.C. §47099 Procedures for Implementing the National Environmental Policy Act 40 CFR §6.301(c) Protection of Archaeological Resources 43 CFR §7.4(a) (continued)	Archaeological Resource Recovery and Preservation	No person may excavate, remove, damage, or otherwise alter or deface or attempt to excavate, remove, damage, or otherwise alter or deface any archaeological resource located on public lands unless such activity is pursuant to a permit. If an EPA activity may cause irreparable loss or destruction of significant scientific, prehistoric, historic, or archaeological data, the responsible official or the secretary of the Interior is authorized to undertake data recovery and preservation activities.	Applicable	See above remark.
National Historic Preservation Act 16 U.S.C. §470 36 CFR 800 Procedures for Implementing the National Environmental Policy Act 40 CFR §6.301 (a),(b)	Historic Preservation	A Federal agency must take into account how each of its undertakings could affect historic properties. The purpose of this Act is not only to protect those properties listed in or eligible for the National Register of Historic Places, but also those properties that have not been listed or formally determined eligible for the listings. The heads of all Federal agencies shall assume responsibility for the preservation of historic properties which are owned or controlled by such agency. Prior to any Federal undertaking which may directly and adversely affect any National Historic Landmark, the head of the responsible agency shall, to the extent possible, minimize the harm to such landmark.	Applicable	See above remark.
Native American Graves Protection and Repatriation Act 25 U.S.C. §3001 Comment No. 37	Protection of American Indian Grave Sites	Provides for the return of human remains and cultural objects from Native American graves to affiliated tribes.	Applicable	

TABLE A-5
(Continued)

Citation	Location	Requirement	Determination	Remarks
HISTORIC AND CULTURAL RESOURCE PROTECTION (continued)				
American Indian Religious Freedom Act 42 U.S.C. §1996 Comment No. 37	Protection of American Indian Religious Freedom	Provides for tribal access by native peoples to grave sites and sites of cultural, symbolic, or religious significance.	Applicable	
FLOODPLAINS/WETLANDS PROTECTION				
Procedure for Implementing the National Environmental Policy Act 40 CFR §6.302(a) [Executive Order 11990]	Protection of Wetlands	Federal agencies conducting certain activities must avoid, to the extent possible, the adverse impacts associated with the destruction or loss of wetlands and to avoid support of new construction in wetlands when a practicable alternative exists.	Applicable	An updated site-wide delineation of Fernald wetlands, performed in accordance with the U.S. Army Corps of Engineers Wetland Delineation Manual, was completed in March 1993. Although there are wetlands located near the Lime Sludge Ponds, the Solid Waste Landfill is the only subunit with wetlands located inside the battery limits. These wetlands may be affected during the Operable Unit 2 remedial action. Wetlands in other areas of the site may also be impacted by construction and operation of the on-site disposal facility. A Wetland/Floodplain Assessment was conducted.
Procedures for Implementing the National Environmental Policy Act 40 CFR §6.302(b) [Executive Order 11988] Comment No. 37	Floodplain Management	Federal agencies must evaluate the potential effects of actions they may take in a floodplain to avoid, to the extent possible, adverse effects associated with direct and indirect development of a floodplain.	Applicable	An updated floodplain determination was performed for Paddys Run in October 1993 using the Army Corps of Engineers' standard HEC2 water surface profile analysis program. The 100-year flood elevations reach the western slope of the Inactive Flyash Pile and the toe of the South Field slope. Indirect, short-term floodplain impacts will occur during remediation. A Wetland/Floodplain Assessment was conducted.

TABLE A-5
(Continued)

Citation	Location	Requirement	Determination	Remarks
		FLOODPLAINS/WETLANDS PROTECTION (continued)		
DOE Compliance with Floodplain/Wetlands Environmental Review Requirements 10 CFR §1022.3(a),(b)(1),(2),(3),(5),(6),(c),(d),(e)	Floodplain/Wetlands	DOE shall exercise leadership and take action to: • avoid to the extent possible the long- and short-term adverse impacts associated with the destruction of wetlands and the occupancy and modification of floodplains and wetlands, and avoid direct and indirect support of floodplain and wetlands development wherever there is a practicable alternative. • incorporate floodplain management goals and wetlands protection considerations into its planning, regulatory, and decision-making processes and shall to the extent practicable: - reduce the hazard and risk of flood loss. - minimize the impact of floods on human safety, health, and welfare. - restore and preserve natural and beneficial values served by the floodplains. - minimize the destruction, loss, or degradation of wetlands. - preserve and enhance the natural and beneficial values of wetlands • undertake a careful evaluation of the potential effects of any DOE action taken in a floodplain and any new construction undertaken by DOE in wetlands not located in a floodplain • identify, evaluate, and as appropriate, implement alternative actions which may avoid or mitigate adverse floodplain/wetlands impacts • provide opportunity for early public review of any plans or proposals for actions in floodplains and new construction in wetlands	Applicable	

TABLE A-5
(Continued)

Citation	Location	Requirement	Determination	Remarks
		FLOODPLAINS/WETLANDS PROTECTION (continued)		
DOE Compliance with Floodplain/Wetlands Environmental Review Requirements 10 CFR §1022.5(b),(h)	Floodplain/Wetlands	This part shall apply to all proposed floodplain/ wetlands actions, including those sponsored jointly with other agencies, where practicable alternatives to the proposed actions are still available. The policies and procedures of this part which are applicable to floodplain actions shall apply to all proposed actions which occur in a wetlands located in a floodplain.	Applicable	
DOE Compliance with Floodplain/Wetlands Environmental Review Requirements 10 CFR §1022.11(a),(b), (c)	Floodplain/Wetlands	Concurrent with its review of a proposed action to determine appropriate NEPA requirements, DOE shall determine applicability of the floodplain management and wetlands protection requirements of this part. In making a floodplain determination, DOE shall utilize the Flood Insurance Rate Maps (FIRMs) or the Flood Hazard Boundary Maps (FHBMs) prepared by the Federal Insurance Administration of the Department of Housing and Urban Development to determine if a proposed action is located in the base or critical action floodplain, as appropriate. For a proposed action in an area of predominantly Federal or State land holdings where FIRM or FHBM maps are not available, information shall be sought from the land administering agency (e.g., Bureau of Land Management, Soil Conservation Service, etc.) or from agencies with floodplain analysis expertise.	Applicable	
DOE Compliance with Floodplain/Wetlands Environmental Review Requirements 10 CFR §1022.12(a)	Floodplain/Wetlands	If DOE determines, pursuant to 10 CFR §§ 1022.5 and 1022.11, that this part is applicable to the proposed action, DOE shall prepare a floodplain/wetlands assessment, according to the requirements in this section (10 CFR §1022.12).	Applicable	

TABLE A-5
(Continued)

Citation	Location	Requirement	Determination	Remarks
		FLOODPLAINS/WETLANDS (continued)		
DOE Compliance with Floodplain/Wetlands Environmental Review Requirements 10 CFR §1022.15(a)	Floodplain/Wetlands	If DOE finds that no practicable alternative to locating in the floodplain/wetlands is available, consistent with the policy set forth in Executive Order 11988, DOE shall, prior to taking action, design, or modify its action in order to minimize potential harm to or within the floodplain/wetlands.	Applicable	
Ohio Solid Waste Disposal Regulations OAC 3745-27-20 (C)(2)	Floodplain	The limits of solid waste placement and the leachate management system cannot be located in a regulatory floodplain, unless deemed acceptable by the Director.	Applicable	
Ohio Solid Waste Disposal Regulations OAC 3745-27-07 (H)(4)(d)	Stream, Lake, or Wetland	The limits of waste placement cannot be located within 200 feet of a stream, lake, or wetland, unless deemed acceptable by the Director.	Applicable	
		GROUNDWATER PROTECTION		
Safe Drinking Water Act 42 U.S.C. §1424(e)	Sole Source Aquifer	All Federal financially assisted projects constructed in the area of a sole source aquifer and its principal recharge zone will be subject to EPA's review to insure that these projects are designed and constructed so that they do not create a significant hazard to public health.	Applicable	A notice in 53 FR 15876 (May 4, 1988) designated the Buried Valley Aquifer System of the Great Miami/ Little Miami River Basins of southwestern Ohio as a sole or principal source of drinking water. The Fernald site is located above this aquifer.
Ohio Solid Waste Disposal Regulations OAC 3745-27-07 (H)(3)(a)	Any	A sanitary landfill facility may not be located within the surface and subsurface areas surrounding a public water supply well through which contaminants may move toward and may reach the public water supply well within a period of 5 years.	Applicable	
Ohio Solid Waste Disposal Regulations OAC 3745-27-07 (H)(2)(c)	Any	A sanitary landfill facility cannot be located above an aquifer declared by the federal government under the Safe Drinking Water Act to be a sole source aquifer.	Applicable	

TABLE A-5
(Continued)

Citation	Location	Requirement	Determination	Remarks
		GROUNDWATER PROTECTION (continued)		
Ohio Solid Waste Disposal Regulations OAC 3745-27-07 (H)(2)(d)	Any	A sanitary landfill facility cannot be located above an unconsolidated aquifer capable of sustaining a yield of 100 gallons per minute for a 24-hour period to an existing or future water supply well located within 1,000 feet of the limits of solid waste placement, unless deemed acceptable by the Director.	Applicable	
Ohio Solid Waste Disposal Regulations OAC 3745-27-07 (H)(3)(c)	Water Supply Well or Developed Spring	The limits of sold waste placement cannot be located within 1,000 feet of an existing water supply well or developed spring unless it is deemed acceptable by the Director or it is: • controlled by the applicant, is needed as a source of nonpotable water, no other reasonable alternate water source is available, and the well is constructed to prevent contamination of the groundwater, OR • located at least 500 feet hydrogeologically up-gradient from the limits of solid waste placement, OR • separated from the limits of solid waste placement by a hydrogeologic barrier, OR • constructed and used solely for monitoring groundwater quality	Applicable	
Ohio Solid Waste Disposal Regulations OAC 3745-27-07 (H)(2)(e)	Any	The isolation distance between the uppermost aquifer system and the bottom of the recompacted soil liner of a sanitary landfill system cannot be less than 15 feet of in situ or added geologic material deemed acceptable by the Director.	Applicable	
OEPA Guidance on Solid Waste Siting Criteria: Material Acceptable to the Director GD202.104	Any	For geologic material to be deemed acceptable to the Director as added fill under OAC Rule 3745-27-07 (B)(15), it must be able to meet the following criteria: • the geologic material must be impermeable enough so it will not store, transmit or yield a significant amount of water to a well or spring	TBC	

TABLE A-5
(Continued)

Citation	Location	Requirement	Determination	Remarks
		GROUNDWATER PROTECTION (continued)		
OEPA Guidance on Solid Waste Siting Criteria: Material Acceptable to the Director GD202.104 (continued)	Any	• the geologic material must be able to impede both physically and chemically, the flow of leachate constituents through it In order to meet both criteria listed above, the added geologic material should: • be classified as CL, SC, GC, CL-ML, or CH under the Unified Soil Classification System (USCS) • be composed of particles of which at least 25% by dry weight will pass through a No. 200 (75 μm) sieve • be composed of no more than 25% by dry weight particles which will not pass through a No. 4 sieve • no particle should be greater than 8 inches in diameter • have a final permeability of no more than $1x10^{-8}$ cm/sec • be recompacted in a manner that when the landfill is constructed on it, no damage to the landfill liner will occur due to settling of the added material	TBC	
Ohio Solid Waste Disposal Regulations OAC 3745-27-07 (H)(4)(b)	Any	The limits of waste placement cannot be located within 300 feet of the sanitary landfill facility's property line, unless deemed acceptable by the Director.	Applicable	
Ohio Solid Waste Disposal Regulations OAC 3745-27-07 (H)(4)(c)	Any	The limits of solid waste placement cannot be located within 1,000 feet of an existing domicile whose owner has not consented in writing to the location of the sanitary landfill facility.	Applicable	

000214

6793
FEMP-OU02-4-DRAFT
April 8, 1995

TABLE A-5
(Continued)

Citation	Location	Requirement	Determination	Remarks
		GROUNDWATER PROTECTION (continued)		
Ohio Solid and Hazardous Waste Rules ORC 3734.02(A)	Protection of Human Health and the Environment	The director of environmental protection shall adopt and may modify, suspend, or repeal rules for all solid waste facilities in order to ensure that the facilities will be located, maintained, and operated, and will undergo closure and post-closure care, in a sanitary manner so as not to create a nuisance, cause or contribute to water pollution, create a health hazard, or violate 40 CFR § 257.3-2 or 257.3-8.	Applicable	
		RADIOLOGICAL SITING CRITERIA		
Radioactive Waste Management DOE Order 5820.2A Chapter III (7)	Disposal Site Selection	Disposal site selection criteria (based on planned waste confinement technology) shall be developed for establishing new low-level waste disposal sites. Disposal site selection shall be based on an evaluation of the prospective site in conjunction with planned waste confinement technology, and in accordance with the National Environmental Policy Act process. Site selection shall also be based on the following criteria: • The disposal site shall have hydrogeologic characteristics which, in conjunction with the planned waste confinement technology, will protect the groundwater resource. • The potential for natural hazards such as floods, erosion, tornadoes, earthquakes, and volcanoes shall be considered in site selection. • Site selection criteria shall address the impact on current and projected populations, land use resources development plans and nearby public facilities, accessibility to transportation routes and utilities, and the location of waste generation.	TBC	

000215

TABLE A-5
(Continued)

Citation	Location	Requirement	Determination	Remarks
		RADIOLOGICAL SITING CRITERIA (continued)		
Joint NRC-EPA Guidance on Siting of Mixed Low-Level Radioactive and Hazardous Waste Units (March 13, 1987)	Any	Areas with highly vulnerable hydrogeology deserve special attention in the siting of a mixed low-level waste disposal facility. Hydrogeology is considered vulnerable when groundwater travel time along any 100-foot flow path from the edge of the engineered containment structure in less than approximately 100 years. Disposal sites located in areas of vulnerable hydrogeology may require extensive, site-specific investigations which could lead to and provide bases for restrictions or modifications to design or operating practices. However, a finding that a site is located in an area of vulnerable hydrogeology alone, based on the EPA criteria, is not considered sufficient to prohibit siting under RCRA.	TBC	

Responsiveness Summary

THE OPERABLE UNIT 2

RESPONSIVENESS SUMMARY

TABLE OF CONTENTS

Table of Contents i

List of Tables iii

List of Acronyms and Abbreviations iv

1.0 Purpose/Overview RS-1-1

2.0 Public Involvement RS-2-1

3.0 Summary of Issues and Responses RS-3-1

Issue 1 On-Property Disposal Versus Off-Site Disposal RS-3-7

(a) Opposition to On-Site Disposal Facility RS-3-7

(b) Acceptance of On-Site Disposal Facility RS-3-9

(c) Disposal at the Nevada Test Site RS-3-10

(d) Commercial Off-Site Disposal Facility RS-3-10a

(e) Off-Site Regional Disposal Facility RS-3-11

(f) Protection of the Great Miami Aquifer RS-3-11

Issue 2 Design of the Disposal Facility RS-3-14

(a) Buffer Zone RS-3-14

(b) Meaning of Permanence RS-3-14

(c) Fixing a Problem May Create Bigger Problems RS-3-15

(d) Independent Expert RS-3-15

(e) Size RS-3-16

Issue 3 Waste to be Placed in the Disposal Facility RS-3-17

(a) Waste from Other Sites RS-3-17

(b) Implementation of Waste Acceptance Criteria RS-3-17

(c) Calculation of Waste Acceptance Criteria RS-3-19

Issue 4 Excavation and Monitoring Techniques During Remedial Activities . . . RS-3-22

(a) Real-Time Monitoring RS-3-22

(b) Dilution of Waste RS-3-23

(c) As Low As Reasonably Achievable (ALARA) RS-3-23

(d) Pollution Prevention RS-3-23

(e) Transition RS-3-24

Issue 5 Monitoring/Maintenance of Disposal Facility RS-3-26

(a) Long-Term Monitoring/Maintenance RS-3-26

(b) Costs and Commitment RS-3-26a
(c) Availability of Data and Reports RS-3-28
Issue 6 Cost RS-3-30
(a) Alleged Misrepresentation of Monitoring/Maintenance Cost . RS-3-30
(b) Cost Should Not Be A Factor RS-3-31
(c) Site-Wide Perspective RS-3-31
Issue 7 Future Use/Ownership RS-3-32
(a) Ownership of FEMP Site RS-3-32
(b) Above Background Levels -- Public's Right-To-Know RS-3-32
(c) Future Monetary Benefit RS-3-33
Issue 8 Public Participation Process RS-3-34
(a) Extension of the Public Comment Period RS-3-34
(b) Public Involvement After the ROD RS-3-34
(c) Future Review of the ROD RS-3-35
(d) NTS Review RS-3-36
(e) Public Understanding RS-3-36
Issue 9 Misrepresentation of Risk and Background RS-3-37
(a) Risk Levels RS-3-37
(b) Background Levels RS-3-38
Issue 10 Use of New Technology in the Future RS-3-41
(a) Review of New Technologies RS-3-41
(b) Retrievability of Waste RS-3-41a
Issue 11 Integration and Consistency with Other Operable Units RS-3-44
(a) Consistent Cleanup Levels RS-3-44
(b) Comprehensive ROD RS-3-46
Issue 12 Transportation RS-3-46
(a) Safer Transportation Methods RS-3-48
Issue 13 Process Knowledge RS-3-48
4.0 Summary of Comments Not Resulting in Issues RS-4-1

Attachment I - Formal Oral and Written Comments
Attachment II - Public Meeting Transcript
Attachment III - Distribution List

000219

LIST OF TABLES

Table		Page
Table RS-3-1	Summary of Issue Statements	RS-3-2
Table RS-3-2	Comment Identification and Tracking	RS-3-4
Table RS-9-1	Conversion of Uranium Isotopic Activity to Total Uranium in mg/kg (ppm) for Surface Soil	RS-3-39

ACRONYMS AND ABBREVIATIONS[1]

ALARA	as low as reasonably achievable
ARARs	applicable or relevant and appropriate requirements
CAB	Citizens Advisory Board (state of Nevada)
CERCLA	Comprehensive Environmental Response, Compensation, and Liability Act
CFR	Code of Federal Regulations
COC	contaminant of concern
DOE	U.S. Department of Energy
EPA	U.S. Environmental Protection Agency
FCTF	Fernald Citizens Task Force
FEMP	Fernald Environmental Management Project
FS	feasibility study (process)
FS/PP-EA	Feasibility Study/Proposed Plan-Environmental Assessment (report)
ILCR	incremental lifetime cancer risk
mg/kg	milligram per kilogram
NCP	National Oil and Hazardous Substances Pollution Contingency Plan
OEPA	Ohio Environmental Protection Agency
pCi/g	picoCurie per gram
PEIC	Public Environmental Information Center
ppm	parts per million
RA	remedial action
RD	remedial design
RI	remedial investigation (process)
RI/FS	remedial investigation/feasibility study
ROD	Record of Decision
SARA	Superfund Amendments and Reauthorization Act

[1]When an acronym is used that may not be familiar to the majority of the readers, the acronym is redefined.

1.0 PURPOSE AND OVERVIEW

As stated in Environmental Protection Agency (EPA) *Guidance on Preparing Superfund Decision Documents*, the responsiveness summary serves three important purposes. First, it provides Department of Energy (DOE) and EPA with information about community concerns and preferences regarding the remedial alternatives. Second, it demonstrates how public comments were integrated into the decision-making process. Third, it allows DOE and EPA to formally respond to public comments.

This Responsiveness Summary has been prepared pursuant to the terms of the 1991 Amended Consent Agreement between DOE and EPA (and the 1993 Amendment), as well as other requirements, including:

- The Comprehensive Environmental Response, Compensation, and Liability Act (CERCLA) as amended by the Superfund Amendments and Reauthorization Act (SARA), 42 United States Code (U.S.C.), Section 9601, *et. seq.*;
- National Oil and Hazardous Substances Pollution Contingency Plan (NCP), 40 Code of Federal Regulations (CFR) Part 300;
- Community Relations in Superfund: A Handbook, Jan. 1992, EPA/540/R-92/009; and
- Guidance on Preparing Superfund Decision Documents: The Proposed Plan, The Record of Decision, Explanation of Significant Differences, The Record of Decision Amendment, Interim Final, July 1989, EPA/540/G-89/007.

As stated above, this Responsiveness Summary documents EPA and DOE responses to all comments received during the Operable Unit 2 public comment period. After public comments and concerns were formally submitted to DOE, in oral and written form, the comments were summarized into issue statements and responded to accordingly. Copies of the actual comments received are included in Attachment I.

Section 2.0 of this Responsiveness Summary gives an overview of public involvement for the Fernald Environmental Management Project (FEMP) and public involvement during development and approval of the Operable Unit 2 Remedial Investigation (RI) Report and Feasibility Study/Proposed Plan - Environmental Assessment (FS/PP-EA). Section 3.0 discusses development of the issue statements and presents public concerns and DOE responses. Section 4.0 presents comments which did not result in issues.

THIS PAGE INTENTIONALLY LEFT BLANK

2.0 PUBLIC INVOLVEMENT

DOE's formal community relations program for the Fernald site, which began in 1985, focused on opening the lines of communication with members of the public residing near the FEMP site. A variety of forums were used to provide information to the community, including a periodic newsletter, regular community meetings, and availability sessions. Other activities included site tours, open houses, a speakers bureau, community assessments, and the development of fact sheets. Several reading rooms, which were later consolidated into one facility located near the FEMP site, were opened to house information about all aspects of the Remedial Investigation/Feasibility Study (RI/FS) process. In 1990, DOE established an Administrative Record for the site. The local Administrative Record is located at the Public Environmental Information Center (PEIC) at 10845 Hamilton-Cleves Highway, Harrison, Ohio 45030; a copy of the Administrative Record is also maintained at the offices of EPA Region V in Chicago, Illinois.

In November 1993 DOE implemented a public involvement program at the FEMP site which aimed at involving community members and other interested parties in decision making at the FEMP site. This public involvement program (which operates today) consists of three elements: (1) public information activities, (2) management involvement, and (3) person-to-person communication. As a result of this public involvement program and the community relations activities required under CERCLA, DOE provided the public with opportunities to comment on decisions relating to the remediation of Operable Unit 2.

The RI Report and the FS/PP-EA were made available to the public on February 18, 1994 and April 29, 1994, respectively. Notices of availability for inspection of both documents were published in May 1994 in the *Harrison Press*, the *Hamilton Journal*, and *The Cincinnati Enquirer*. A workshop was held on May 10, 1994 to present the results of the RI and to answer questions from the public. A general overview of the Operable Unit 2 subunits was provided, the nature and extent of contamination in the soils and groundwater were illustrated using solid block modeling, and the results of the Operable Unit 2 Baseline Risk Assessment were presented. Another public workshop was held on June 28, 1994 to discuss the FS/PP-EA that had recently been submitted to EPA and Ohio Environmental Protection Agency (OEPA). The purpose of this informational meeting was to discuss the alternatives considered for remediation of Operable Unit 2 and explain how the preferred

remedial alternative was identified. The workshop also emphasized ways the public could become involved in the decision-making process for Operable Unit 2.

On September 13, 1994, OEPA sponsored a public workshop on the possibility of establishing a disposal facility on the FEMP property as a component of remedial actions. The purpose of this meeting was to discuss the waiver from an applicable or relevant and appropriate requirements (ARAR) that was requested from EPA in the Operable Unit 2 FS/PP-EA to allow disposal of FEMP low-level remediation waste on FEMP property. This waiver was necessary because Ohio Solid Waste Disposal Regulations prohibit placement of a new solid waste disposal facility over a high-yield sole-source aquifer. (See Section 7.5.4 in the Decision Summary for more information on the
No. 19 waiver). On October 25, 1994 ~~another~~ DOE held a public workshop ~~was held~~ to discuss any comments and concerns of implementing an on-site disposal facility.

Informational postcards were mailed reminding stakeholders of the October 25, 1994 workshop (discussed above), the upcoming public comment period, and the November 8, 1994 formal public meeting. A notice of availability announcing the opening of the formal public comment period
No. 19 (scheduled to end on November 25, 1994) for the FS/PP-EA was published on October 26, 1994. On November 3, 1994, OEPA held an availability session for members of the public to discuss the Operable Unit 2 Proposed Plan. A formal public meeting was then held on November 8, 1994. At this meeting, representatives from DOE, EPA, and OEPA answered questions about the preferred remedial alternative and other alternatives under consideration for Operable Unit 2. The first part of the meeting consisted of a brief presentation and the opportunity for questions and answers. The second part of the meeting was dedicated to receiving formal comments from the public on the Operable Unit 2 Proposed Plan. OEPA sponsored a second meeting with the elected officials of
No. 20 Ross, Crosby, and Morgan townships to discuss the Operable Unit 2 Proposed Plan and waiver ~~preferred remedial alternative~~ on November 30, 1994.

In response to a November 21, 1994 request from the public for more time to review the remedial alternatives, the comment period was extended to December 30, 1994. A notice appeared in the *Harrison Press*, *Hamilton Journal*, and *The Cincinnati Enquirer* announcing this extension in addition
No. 20 to the mailing of informational postcards. On December 19, 1994, DOE attended the monthly Crosby Township Trustee meeting to give a briefing on the Operable Unit 2 preferred remedial alternative. A second extension was granted pursuant to stakeholder request dated December 30,

1994 which extended the public comment period to January 20, 1995. A notice appeared in the *Hamilton Journal* and *The Cincinnati Enquirer* on January 6, 1995 notifying stakeholders of the second extension and informational postcards were again mailed. DOE met with the Ross Township Trustees on January 5, 1995 to again discuss the Operable Unit 2 preferred remedial alternative.

No. 20

Responses to comments received during the public comment period and at the public meeting are included in this Responsiveness Summary, which is part of the Record of Decision (ROD). The ROD presents the selected remedial action for Operable Unit 2 at the FEMP site in Fernald, Ohio, chosen in accordance with CERCLA (as amended by SARA) and, to the extent practicable, the NCP. The information that the Operable Unit 2 decision is based upon can be found in the Administrative Record.

3.0 SUMMARY OF ISSUES AND RESPONSES

The Operable Unit 2 FS/PP-EA was released for public comment on October 26, 1994. DOE has reviewed all written and oral comments submitted during the public comment period and determined that no significant changes to the preferred remedial alternative were necessary.

This responsiveness summary focuses on the formal comments submitted during the public comment period and oral comments received during the November 8, 1994 formal public meeting held in Harrison, Ohio. Within this responsiveness summary, oral and written comments (see Attachment I) were categorized into significant issues (see Table RS-3-1). For each of these issues, an issue statement has been prepared that addresses the concerns expressed by one or more of the commentors. In many instances, the issue statements are paraphrased from the original comments to succinctly represent the combined concerns of several commentors. The issues resulting from formal comments have been compared with the issues raised during other informal question and answer sessions to ensure that all significant issues have been represented by the issue statements.

For the purpose of developing issue statements, a comment is considered significant if it involves:

- the definition of the preferred remedial alternative;
- public or state acceptance of the preferred remedial alternative;
- the implementation or impacts of the preferred remedial alternative;
- conclusions drawn from evaluations or assessments provided within the document;
- safety of the work performed; or
- enforceability of the decision reached.

At the end of each issue statement, the specific comment letter(s) are identified in parentheses. So that comment responses can be easily found, the comment letters, commentors, relevant issues, and page numbers are cross-referenced in Table RS-3-2. These comments are also part of the Administrative Record for this action. The text of the ROD has been modified based on a number of public comments contained herein. Although these changes are not specifically summarized or highlighted, they can be found in both the Declaration Statement and Decision Summary.

TABLE RS-3-1
SUMMARY OF ISSUE STATEMENTS

ISSUE NUMBER	TOPIC OF ISSUE
1	ON-PROPERTY DISPOSAL VERSUS OFF-SITE DISPOSAL (a) Opposition to On-Site Disposal Facility (b) Acceptance of On-Site Disposal Facility (c) Disposal at the Nevada Test Site (d) Commercial Off-Site Disposal Facility (e) Off-Site Regional Disposal Facility (f) Protection of the Great Miami Aquifer
2	DESIGN OF THE DISPOSAL FACILITY (a) Buffer Zone (b) Meaning of Permanence (c) Fixing a Problem May Create Bigger Problems (d) Independent Expert (e) Size
3	WASTE TO BE PLACED IN THE DISPOSAL FACILITY (a) Waste from Other Sites (b) Implementation of Waste Acceptance Criteria (c) Calculation of Waste Acceptance Criteria
4	EXCAVATION AND MONITORING TECHNIQUES DURING REMEDIAL ACTIVITIES (a) Real-Time Monitoring (b) Dilution of Waste (c) As Low As Reasonably Achievable (ALARA) (d) Pollution Prevention (e) Transition
5	MONITORING/MAINTENANCE OF THE DISPOSAL FACILITY (a) Long-Term Monitoring/Maintenance (b) Costs and Commitment (c) Availability of Data and Reports
6	COST (a) Alleged Misrepresentation of Monitoring/Maintenance Cost (b) Cost Should Not Be A Factor (c) Site-Wide Perspective
7	FUTURE USE/OWNERSHIP (a) Ownership of FEMP Site (b) Above Background Levels -- Public's Right-To-Know (c) Future Monetary Benefit
8	PUBLIC PARTICIPATION PROCESS (a) Extension of the Public Comment Period (b) Public Involvement After the ROD (c) Future Review of the ROD (d) NTS Review (e) Public Understanding

TABLE RS-3-1
(Continued)

ISSUE NUMBER	TOPIC OF ISSUE
9	MISREPRESENTATION OF RISK AND BACKGROUND LEVELS (a) Risk Levels (b) Background Levels
10	USE OF NEW TECHNOLOGY IN THE FUTURE (a) Review of New Technologies (b) Retrievability of Waste
11	INTEGRATION AND CONSISTENCY WITH OTHER OPERABLE UNITS (a) Consistent Cleanup Levels (b) Comprehensive ROD
12	TRANSPORTATION (a) Safer Transportation Methods
13	PROCESS KNOWLEDGE

TABLE RS-3-2
COMMENT IDENTIFICATION AND TRACKING

Comment Letter	Commentor	Page Number of Original Comment	Issue Identification
A	Russ Beckner, Resident of Ross Township	RS-I-1	1a, 2b, 5b, 6a
B	Board of Trustees, Ross Township	RS-I-3	1a, 8a
C	Louis C. Bogar, Resident of Hamilton, Ohio	RS-I-5	1a, 1f, 2b, 2c, 3c, 4a, 6a, 9a, 9b, 10a
D	Robert L. Copeland, Morgan Township Trustee	RS-I-9	1b, 1f, 2e, 3a
E	Lisa Crawford, Resident of ~~Crosby Township~~ Harrison, OH	RS-I-11	1b, 2a, 3a, 3b, 4a, 4c, 4d, 4e, 5a, 5c, 6c, 7a, 8b, 10a
F	Vicky Dastillung, Resident of ~~Harrison, Ohio~~ Ross Township	RS-I-16	1b, 1f, 2d, 3a, 3b, 4a, 4c, 5a, 5b, 5c, 6a, 7b, 8b, 8c, 9a, 10a, 10b, 11b
G	Pamela Dunn, Resident of ~~Crosby Township~~ Harrison, Ohio	RS-I-19	1b, 2a, 3a, 3b, 4a, 4c, 4d, 5a, 7a, 8b, 10a
H	Darryl Huff, Resident of Morgan Township	RS-I-21	1a, 1d, 2b, 3a, 3b, 6a, 7c, 8b, 8e
I	Dick Kasparek, Resident of Hamilton, Ohio	RS-I-23	3c, 11a, 13a
J	Dr. William M. Kuhlmann, Resident of Harrison, Ohio	RS-I-24	1a, 1f, 6a, 12a
K	Paul Liebendorfer, Bureau of Federal Facilities, State of Nevada	RS-I-25	1b
L	Betty C. McKay, Resident of Harrison, Ohio	RS-I-27	2a, 3a, 3b, 4a, 5a, 7a, 8b
M	Donald J. Meyer, Attorney at Law, Harrison, Ohio	RS-I-28	1a, 1e, 5b, 7c
N	Dianne R. Nielson, Department. of Environmental Quality, State of Utah	RS-I-30	1b
O	Thomas A. Schneider, Ohio Environmental Protection Agency	RS-I-31	1b, 3a, 3b, 4a, 4d, 5a, 5c, 7a, 8b, 10a
P	Joan K. Pottenger, Resident of Harrison, Ohio	RS-I-34	1a
Q	H. Thomas ~~Tom~~ & Carolyn A. Rasche, Residents of Ross, Ohio	RS-I-35	1a
R	Larry Stebbins, Resident of Ross Township	RS-I-36	1b, 3a, 4d
S	Richard Strimple~~, Resident of Hamilton, Ohio~~	RS-I-37	1f

000231

TABLE RS-3-2
(Continued)

Comment Letter	Commentor	Page Number of Original Comment	Issue Identification
T	Gary Storer, Crosby Township Trustee	RS-I-38	1a, 5b, 6a, 6b
U	Judy Suzurikawa, Cincinnati Water Works	RS-I-41	1f, 8a
V	Donald H. Thiem, ~~Ross Township Trustee~~ Resident of Hamilton, Ohio	RS-I-42	1a, 2e
W	Unidentified Commentor (Public Meeting Evaluation Sheet)	RS-I-43	1b
X	Unidentified Speaker (Public Meeting)	RS-I-45	1a, 1c, 1f, 3b, 5b
Y	William L. Vasconi, Chair, Nevada Test Site, Community ~~Citizens~~ Advisory Board ~~Nevada~~	RS-I-46	1b, 8d
Z	J.E. Walther, Resident of Hamilton, Ohio	RS-I-48	1a, 1f, 2a, 2b, 9a, 12a
AA	Tom Willsey, President, Ross Township Board of Trustees	RS-I-49	1a, 2b, 6b, 8a
BB	Edwa Yocum, Resident of Crosby Township	RS-I-53	1b, 2a, 3a, 3b, 4a, 5a, 7a
CC	David Young, Ross Township Trustee	RS-I-54	1a

000832

THIS PAGE INTENTIONALLY LEFT BLANK

ISSUE 1 - ON-PROPERTY VERSUS OFF-SITE DISPOSAL

Comment. (a) OPPOSITION TO ON-SITE DISPOSAL FACILITY. Stakeholders identified their opposition to the disposition of waste at the FEMP site for various reasons: (1) the remediation waste resulting from cleanup of the FEMP site should be transported to and disposed of at the Envirocare facility near Clive, Utah because the geology and arid environment at the Envirocare site is more suitable to support a disposal facility; (2) several members of the community were under the impression that all contamination at the FEMP site would be excavated and sent off site; (3) environmental factors (e.g., population density, geology, etc.) at the FEMP site could result in potential problems for the implementation of an on-site disposal facility; and (4) the only reason for on-site disposal is cost. *(Comment letters A, B, C, H, J, M, P, Q, T, V, X, Z, AA, and CC.)*

Response. (a)(1) DOE agrees that overall the geologic features and arid environment of the Envirocare facility in Clive, Utah (as well as DOE's Nevada Test Site, northwest of Las Vegas) may present more favorable conditions for waste disposal, especially for high levels of contamination. However, some FEMP remediation waste can be safely disposed of at the FEMP site. In the Operable Unit 2 FS/PP-EA, DOE, in accordance with the CERCLA process, balanced the nine evaluation criteria to determine the preferred remedial alternative. That evaluation is summarized in this ROD. Threshold requirements (i.e., protection of human health and the environment and meeting ARARs or justifying a waiver) are met by both the on-site and off-site disposal alternatives. DOE has taken a balanced approach in proposing a solution for disposal of Operable Unit 2 remediation waste and other FEMP remediation waste. The balance consists of sending the most contaminated waste (i.e., Operable Unit 1 and Operable Unit 4) to western disposal facilities and disposing of the low-level remediation waste at the FEMP site. This is based on the ability to dispose of these low-level remediation waste safely at the FEMP site and the western states' resistance to being the "dumping" ground for all waste. DOE believes, after taking all factors into consideration, the preferred remedial action for Operable Unit 2 (i.e., implementation of an on-site disposal facility) is in the best interest of stakeholders, both in Ohio and in the western states.

(2) DOE acknowledges community non-acceptance of an on-site disposal facility as expressed by the commentors concerns stated above. DOE also understands that some members of the community were expecting all FEMP waste to be removed and sent off site. DOE proposes to remove and dispose off site the portion of FEMP remediation waste which cannot be safely managed at the FEMP site. However, other factors, such as the implementability of Alternative 3 (Off-Site Disposal), have led DOE to propose the disposal of some FEMP remediation waste in an on-site disposal facility. One implementing factor involves the uncertainty as to the amount of time needed for coordination of several stakeholders -- stakeholders in Nevada and/or Utah and stakeholders in states that waste would have to be shipped through. Other factors include approval of an Environmental Impact Statement at Nevada Test Site (NTS) and issuance of a final ruling by DOE Headquarters to allow disposal of DOE remediation waste at permitted commercial disposal facilities.

Unfortunately, waste disposal is an intensely debated issue across the country and not just near the FEMP site. Citizens in western states have expressed reluctant acceptance of managing some waste but are opposed to taking all FEMP remediation waste. Due to these issues, EPA and OEPA support DOE in this balanced approach to waste management where the low-volume, high-concentration waste go off site for disposal and the high-volume, low-concentration waste, that can be safely disposed of in an engineered disposal facility on site, are managed at the FEMP site.

(3) When evaluating alternatives, DOE considered potential impacts on and potential impacts from environmental factors such as socioeconomics (including population demographics, land use of areas adjacent to the site, and potential risks to the surrounding population), groundwater, geology, and biotic resources.

Cleanup alternatives must be compared against the nine evaluation criteria defined by the NCP. A cleanup alternative must first meet the two "threshold criteria" -- Overall Protection of Human Health and the Environment, and Compliance with ARARs (or justification of an ARAR waiver), before being evaluated against the next five "primary balancing criteria." The "primary balancing criteria" include Long-Term Effectiveness and Permanence; Reduction of Toxicity, Mobility, or Volume through Treatment; Short-Term

Effectiveness; Implementability; and Cost. The last two criteria, State Acceptance and Community Acceptance, are the "modifying criteria" and are evaluated after the public comment period. Both Alternative 3 (Off-Site Disposal) and Alternative 6 (On-Site Disposal with Off-Site Disposal of Fraction Exceeding Waste Acceptance Criteria) meet the two threshold criteria. It is the evaluation of the "primary balancing criteria" that there is a difference between the alternatives. As discussed earlier, the implementability of Alternative 3 is uncertain. Under Alternative 6 the remediation waste resulting from cleanup of Operable Unit 2 would be placed in an engineered disposal facility using proven materials, methods, and designs. In addition to the incorporation of a leachate collection and leak detection system, this engineered facility would include containment features that would be the primary means for ensuring long-term protection of human health and the environment. Additionally, it is important to note that modeling of the facility to determine protectiveness relied only on natural barrier protection and did not take into account any layers composed of synthetic materials (i.e., flexible membrane liner, leachate collection, and leak detection). Alternative 6 would be implemented in a safe, straightforward manner and would be designed to provide long-term protection of human health and the environment.

(4) Cost is one of five primary balancing criteria of CERCLA used to determine the most appropriate solution. Cost was therefore considered; however, as one of nine evaluation criteria cost was not the sole deciding factor. See discussion above in Issue 1(a)(3).

Comment. (b) <u>ACCEPTANCE OF ON-SITE DISPOSAL FACILITY.</u> Several members of the local public and OEPA expressed their acceptance of the on-site disposal facility with the view that waste disposal is a global issue (technological, political, and practical considerations need to be factored into decision-making) and members of the community in other states do not want FEMP waste in their backyards either. Community members felt that DOE should get the worst stuff out of here and take responsibility for the rest that they can safely keep here. However, these same commentors also stated that certain conditions must be met (e.g., buffer zone, geological support). Some of these commentors, including OEPA, discussed specific requirements (e.g., no hazardous waste storage, waiver must be very site specific) that they felt should be included in the EPA CERCLA ARAR waiver of the Ohio Solid Waste Siting Criteria.

Stakeholders from Nevada and Utah were also supportive of the Operable Unit 2 preferred remedial alternative. Stakeholders in both states conveyed that as a result of DOE taking this balanced approach (excavation and disposal of Operable Unit 2 remediation waste in an on-site disposal facility and excavation and disposal of Operable Unit 2 remediation waste which does not meet waste acceptance criteria [i.e, ~~360~~ 346 pCi/g uranium-238, or ~~1,080~~ 1,030 parts per million (ppm) total uranium] at either the NTS or Envirocare facility), their support for waste disposal facilities in their own states receiving out-of-state waste would continue. *(Comment letters D, E, F, G, K, N, O, R, W, Y, and BB.)*

No. 1

Response. (b) Through the selection of this alternative, DOE is taking responsibility for what can be safely disposed at the FEMP site while ensuring protection of human health and the environment. As the commentors correctly indicate, it is the EPA that would be granting the waiver to DOE. ~~DOE will inform EPA of the commentors' requests for specific requirements to be included in the waiver.~~ The justification for this waiver is provided in the Decision Summary of this ROD and is supported by the Administrative Record for Operable Unit 2.

No. 4

Comment. (c) DISPOSAL AT THE NEVADA TEST SITE. One commentor was concerned that the Nevada Test Site (NTS) was not considered in DOE's evaluation of alternatives. *(Comment letter X.)*

Response. (c) Both NTS and Envirocare were considered for the off-site disposal alternative (Alternative 3) in the Operable Unit 2 FS/PP-EA. The NTS was originally used as the "representative off-site disposal facility" for cost estimates of Alternative 3. However, due to the high cost of disposal at the NTS, EPA directed DOE to use a different facility for the cost estimate so that a more accurate comparison could be made between the alternatives. Because the costs were significantly lower, the Envirocare facility was chosen as the representative facility for purposes of the FS. However, DOE has not yet made a final decision as to which off-site facility Operable Unit 2 remediation waste would be sent to under Alternative 3 or Alternative 6. Both the NTS and Envirocare are still being evaluated and will be considered.

Comment. (d) COMMERCIAL OFF-SITE DISPOSAL FACILITY. One commentor was concerned that DOE headquarters had still not issued a final ruling on the current ban of disposing DOE waste at permitted commercial disposal facilities. *(Comment letter H.)*

Response. (d) DOE Headquarters has not issued a final ruling to allow the general disposal of DOE remediation waste at permitted commercial disposal facilities; however, DOE Headquarters did issue an exemption (on November 8, 1994) for Operable Unit 1 waste to go to the Envirocare facility. Since Operable Unit 2 material that exceeds the waste acceptance criteria and the Firing Range material would be sent off site to a commercial disposal facility, a similar exemption would be necessary unless DOE changes its policy.

Comment. (e) OFF-SITE REGIONAL DISPOSAL FACILITY. One commentor suggested that another disposal site in Ohio be found which does not present the same risk to the aquifer as the FEMP site. *(Comment letter M.)*

Response. (e) The alternatives that were identified for Operable Unit 2 remediation waste cover a broad range of remedial options, including on- and off-site disposal. The alternative identified in the comment (a new, off-site disposal facility) is a combination of the concepts presented in Alternative 3 (an existing, off-site disposal facility) and Alternative 6 (a new, on-site disposal facility). The cost of such an alternative would be expected to be between the costs of the two alternatives noted. However, the length of time for permitting and resolution of political issues for constructing a new low-level disposal facility (somewhere in Ohio) is believed to impact implementability so extensively as to be prohibitive. The potential for disposal of FEMP remediation waste to become entangled with the highly controversial development of a disposal facility for commercial low-level remediation waste from compact states could also prohibit a timely cleanup of Operable Unit 2. For these reasons, establishment of a new, off-site disposal facility within the State of Ohio was not considered for detailed analysis of potential remedies for Operable Unit 2.

Comment. (f) PROTECTION OF THE GREAT MIAMI AQUIFER. (1) Several commentors were concerned that the on-site disposal facility would not be protective of the Great Miami Aquifer (a high-yielding sole-source aquifer) which provides water to residents and industries in the area. One commentor noted that the proposed location of the disposal facility is on an uncontaminated area and that failure of the disposal facility would provide direct access to the aquifer and result in additional contamination. Other commentors felt that the disposal facility should be placed over the best geology at the FEMP and that all ARARs for protection of the aquifer must be met. One commentor expressed concern that

the aquifer would be polluted forever and true cleanup would never occur. *(Comment letters C, D, F, J, S, U, X, and Z.)*

Response. (f) The overall protectiveness of the disposal facility has been determined through conservative modeling assumptions which were based on the natural protection of the gray clay located under the proposed location of the disposal facility and did not include the additional protection due to the synthetic membranes, clay layer, leachate collection system, and leak detection system in the engineered disposal facility. A leak detection system has been included in the design so that repairs to the facility could be implemented before any contamination reaches the sole-source aquifer.

The on-site disposal facility will be constructed over the most suitable geology available at the FEMP in order to provide the greatest amount of natural protection for the aquifer. All ARARs for protection of the groundwater (including Safe Drinking Water Act standards) will either be met or a waiver will be justified (as in the case of the Ohio requirement prohibiting disposal over a high-yield, sole-source aquifer).

It is DOE's belief that the aquifer will not be polluted forever. Operable Unit 5 is currently conducting the South Plume Removal Action to pump contaminated groundwater to a treatment facility. The remedial action and final cleanup levels for restoration of the aquifer will be determined in the Operable Unit 5 ROD. The treated water, from both the removal action and remedial action, will be discharged to the Great Miami River in compliance with regulations, including the Clean Water Act. As with the CERCLA selection of remedy process preceding Operable Units 3 (Interim Remedial Action), 4 and 1, and this Operable Unit 2, the public will have the opportunity to comment on and provide input to the decision-making process for the selection of remedy for Operable Unit 5.

THIS PAGE INTENTIONALLY LEFT BLANK

ISSUE 2 - DESIGN OF THE DISPOSAL FACILITY

Comment. (a) BUFFER ZONE. Members of the community expressed concern over the buffer zone around the disposal facility. Some asked that at least 300 feet around the facility be maintained and another requested a "minimum two-mile safety buffer zone." ~~at least 2 miles.~~ *(Comment letters E, G, L, Z, and BB.)*

No. 12

Response. (a) Regulations specify that a 300-foot (91-meter) buffer zone must be between the limits of waste placement and the property boundary. ~~The intent of the buffer zone, in addition to ensuring that the public will not come in contact with the facility or its contents, is to allow adequate easement for operations, maintenance, and monitoring.~~ The disposal facility cap reduces direct exposure to below detectable quantities at the surface, thus not posing a risk to human health or the environment; therefore, a distance farther away (e.g., two-mile buffer zone) would not provide any additional margin of safety. The buffer zone around the disposal facility is not to provide a "safe" distance in regard to risk/exposure, but rather to allow adequate easement for operations, maintenance, and monitoring of the facility; hence, a two-mile buffer zone is not necessary and will not be implemented. The on-site disposal facility will include at least a 300-foot buffer zone (as discussed in Section 9.0 of the Decision Summary).

No. 12

Comment. (b) MEANING OF PERMANENCE. Many commentors expressed concern over the term "permanence" being utilized to explain the assumed protection of the disposal facility. *(Comment letters A, C, H, Z, and AA.)*

No. 9

Response. (b) ~~Use of the term "permanence" refers to the determination that, based on available technology, the preferred remedial alternative provides the most feasible and permanent solution for the remediation of Operable Unit 2. Long term effectiveness and permanence is one of the nine criteria used to evaluate a proposed remedy. in terms of the risk remaining at the site after response objectives have been met. The primary focus of this evaluation is the magnitude of residual risk and the adequacy and reliability of the controls that may be required to manage the waste that remains on site.~~ Long-term effectiveness and permanence is one of the nine criteria used to evaluate a proposed remedy. In accordance with the NCP, permanence is measured on a scale, from remedial actions that

require long-term maintenance on the lower end of the scale (i.e., less permanent) to remedial actions that permanently destroy contaminants and require no long-term maintenance at the higher end of the scale. One of the ARARs places a yardstick by which permanence can be judged by requiring disposal facilities be designed to be protective for 1,000 years (with a minimum of 200 years). The modeling to predict long-term possible contaminant transport was performed for 1,000 years, with waste acceptance criteria for the disposal facility based on levels to be protective during this time period. The permanence of the disposal facility materials and construction will be maximized by using the best available demonstrated technology and will be monitored for continued effectiveness.

Comment. (c) FIXING A PROBLEM MAY CREATE BIGGER PROBLEMS. One commentor contended that if a failure of the disposal facility was detected, the only way to the fix the problem would be to dig into the facility thus possibly creating the potential for additional contamination. *(Comment letter C.)*

Response. (c) As designed, the composite cap is the primary means of protection for the on-site disposal facility. An inspection and maintenance program will be in effect throughout the service life of the facility to document and maintain performance objectives. In the event of unobserved cap failure, there would be an increase in rainwater infiltration through the facility with a resultant increase in flow in the underlying leachate collection system. This would serve as a warning to help in preventing contaminant transport to the aquifer and trigger an investigation to isolate the failed zone. Cap repair would then be initiated without digging into the contained waste.

The integrity of the bottom liner can also be monitored by the leak detection system. It should be noted that the design of the facility (see Issue 5) and the waste acceptance criteria were developed conservatively as failure of the man-made layers of the disposal facility was assumed during modeling. Even with the assumed failure the facility maintains protection of human health and the environment, including the aquifer. If a failure necessitates removal of the waste or portions of the waste material, the material can be effectively and safely removed using excavation techniques similar to those used for the Operable Unit 2 subunits.

Comment. (d) INDEPENDENT EXPERT. One commentor expressed interest in having an independent expert oversee the engineering, construction, and "filling" of the disposal facility to insure these activities are performed properly. The commentor also insisted that reports from the independent review(s) be part of the public record. *(Comment letter F.)*

Response. (d) EPA and OEPA are responsible for performing oversight activities at the FEMP site (including all activities associated with the implementation of an on-site disposal facility). In addition, encouraged public involvement during the remedial design (RD) and remedial action (RA) process will foster further independent reviews of proposed remedial activities. RD and RA documents (e.g., work plans) as well as documents developed from the

No. 43 oversight process, will be made available for public inspection and copying at the PEIC. Additionally, EPA Technical Assistance Grants (TAGs) are made available to the public to fund activities such as independent oversight of disposal facility design, construction, and monitoring.

Comment. (e) SIZE. One commentor was concerned that the disposal facility would consume approximately 184 acres and that there could not possibly be that much material on site. *(Comment Letter D and V.)*

Response. (e) During development of the FS Reports for Operable Units 2 and 5, a number of different alternatives have been evaluated. Those alternatives examine varying levels of protectiveness and types of land use. When those factors are varied, the amount of material estimated to require disposal varies as a direct result. As the stakeholders come to agreement about acceptable land use and acceptable protectiveness, the range of material volume targeted for disposal will be narrowed.

For informational purposes, the Operable Unit 2 FS/PP-EA presents an extreme case disposal facility that covers an area of over 200 acres and has a capacity of 8.5 million cubic yards. However, the capacity of that conceptual facility was based on the most conservative assumptions about land use and protectiveness at the FEMP site. Based on the Operable Unit 2 and Operable Unit 5 Proposed Plans and the latest estimates from Operable Unit 3, a site-wide disposal facility would realistically be expected to hold between 2.0 and 2.5 million cubic yards of soil and debris. This Operable Unit 2 ROD specifically addresses approximately 300,000 cubic yards of waste material from Operable Unit 2 which would require 35 acres (including the buffer zone) for disposal. The estimates of the total maximum and probable amounts were provided to 1) ensure space for all possible remediation wastes from Operable Unit 2, Operable Unit 5, and Operable Unit 3 should their respective RODs select on-site disposal, and 2) allow the public a more comprehensive view of an on-site disposal facility if Operable Unit 5 and Operable Unit 3 remediation wastes are left on site.

ISSUE 3 - WASTE TO BE PLACED IN THE DISPOSAL FACILITY

Comment. (a) WASTE FROM OTHER SITES. Many stakeholders and OEPA expressed the following opinion: if the FEMP site is used for waste disposal, it should be used solely to dispose of waste associated with cleanup of the FEMP site. No other DOE or commercial waste (or anything not currently on-site, except for samples that were sent off-site for characterization or treatability studies) should be brought to the FEMP for on-site disposal. *(Comment letters D, E, F, G, H, L, O, R, and BB.)*

Response. (a) The decision contained within this ROD is specific to Operable Unit 2 remediation waste based on the comparison of the nine CERCLA criteria (as discussed in Section 8.0 of the Decision Summary). Additionally, the EPA waiver to allow waste disposal over a high-yield sole-source aquifer cannot be transferred to any other FEMP waste or off-site waste. Based on the nine evaluation criteria, Operable Units 3 and 5 will similarly decide whether other FEMP remediation waste will remain on-site for disposal. These decisions

No. 14 will be documented in subsequent RODs. The disposal of any off-site waste in ~~an~~ this on-site disposal facility will not occur. ~~would require the attainment of a permit that is governed directly by OEPA regulations, including a public comment period.~~

Comment. (b) IMPLEMENTATION OF WASTE ACCEPTANCE CRITERIA. Many commentors, including OEPA, had concerns related to the waste acceptance criteria (defined as the maximum concentration of a given contaminant that can be placed into the on-site disposal facility while maintaining long-term protection of the aquifer). These concerns include: (1) that dilution of waste concentrations during excavation could occur to allow the FEMP site to actually increase the quantity of waste that could stay on property (i.e., meet waste acceptance criteria); (2) the ~~360~~ 346 pCi/g for uranium-238 should be the upper limit for the waste acceptance criteria and not an average, and that this value should also consider the flexibility of being lowered based on other operable unit decisions; (3) other waste besides uranium-238 (e.g., other uranium isotopes, thorium, etc.) should have to meet waste acceptance criteria; and (4) no characteristic hazardous waste should be disposed of in the on-site disposal facility (other commentors proposed no hazardous, toxic, and/or radioactive waste be disposed of in the on-site disposal facility). *(Comment letters E, F, G, H, L, O, X, and BB.)*

Response. (b)(1) A small amount of mixing may occur during normal excavation, but it is not DOE's intent to increase the volume of waste to be disposed of on site (as declared in Section 9.0 of the Decision Summary). During remediation, DOE intends to excavate "hot spots" with

No. 1 concentrations greater than ~~360~~ 346 pCi/g for uranium-238, or ~~1,080~~ 1,030 ppm total uranium before excavating waste that will be disposed of in the disposal facility. Screening and testing of the two types of excavation materials ("hot spot" material and less contaminated material) will be performed to verify that the materials were being shipped to the proper disposal facility. Following excavation of each "hot spot," the in-place material will be monitored to confirm "hot spot" removal. If test results show the remaining in-place material above cleanup levels, it will be excavated and another round of testing will be performed to confirm the removal of that material in order to verify shipping to the proper disposal facility. By phasing the screening and confirmation testing in this manner, the opportunity for "hot" material to be inadvertently mixed with less contaminated material will be minimized.

No. 1 (2) The waste acceptance criteria of ~~360~~ 346 pCi/g for uranium-238, or ~~1,080~~ 1,030 ppm total uranium will be a maximum level for disposal of Operable Unit 2 remediation waste in the on-site disposal facility (as defined in the Decision Summary). The waste acceptance criteria for uranium-238 may be modified based on other operable unit waste forms (e.g., building rubble from Operable Unit 3); however, alternate uranium-238 waste acceptance criteria would be equivalent to Operable Unit 2 waste acceptance criteria in terms of level of protection of human health and the environment. It is important to note that while other operable unit's uranium cleanup levels may differ from those for Operable Unit 2 because of variations in localized hydrogeology, the waste acceptance criteria for all operable units considering on-site disposal will be evaluated at the same disposal location as DOE intends to build only one on-site disposal facility.

(3) Uranium-238 was determined to present the greatest risk in the Operable Unit 2 risk assessment for future uses of the Great Miami Aquifer; therefore, the waste acceptance criteria for Operable Unit 2 remediation waste was identified in terms of uranium-238. The disposal of all Operable Unit 2 remediation waste below the uranium-238 waste acceptance criteria in an on-site engineered disposal facility was evaluated in the residual risk assessment developed for the Operable Unit 2 FS/PP-EA. The residual risk of the

disposal facility from all Operable Unit 2 contaminants is 1.6×10^{-6}. The waste acceptance criteria for uranium-238 was established to protect future groundwater quality. If it is proposed that waste from other operable units will be managed in the on-site engineered disposal facility, a similar analysis will be done by those operable units and may result in additional waste acceptance criterion for other contaminants.

(4) For Operable Unit 2, the only waste material that would be considered hazardous are Firing Range waste, after it is excavated and actively managed. This waste (approximately 300 cubic yards) will be shipped off site. Operable Unit 2 does not have any waste that
No. 45 would be considered toxic according to the Toxic Substances Control Act. ~~The Operable Unit 5 FS/PP and ROD will consider the acceptability of disposal of remediation waste that have the label of hazardous (e.g., from designated Hazardous Waste Management Units and regulated by the Resource, Conservation, and Recovery Act). Based on the Operable Unit 5 ROD, if it makes sense to keep the hazardous Firing Range waste on site, this would constitute a "significant change" to the Operable Unit 2 ROD. The significant change would need to be documented and issued for public comment.~~

Comment. (c) CALCULATION OF WASTE ACCEPTANCE CRITERIA. (1) It was noted that the waste acceptance criteria should be in parts per million of total uranium (based on normal enrichment) instead of pCi/g of uranium-238 because it is difficult to determine uranium-238 activity with field instruments and it is easier and cheaper to do total uranium chemical analysis in a laboratory than to do a more expensive isotopic analysis for uranium-238. (2) Several commentors questioned the results of converting the waste acceptance criteria for uranium-238 from pCi/g to ppm that were presented in the public meeting. One commentor also mentioned that it is inappropriate to compare uranium-238 levels in Operable Unit 4 to other operable units because radium-226 is the major contaminant for Operable Unit 4, not uranium-238. (3) One commentor felt that radioactivity from all radionuclides should be addressed, not just uranium-238. (4) In addition, average and maximum waste uranium-238 concentrations presented in the public meeting were meaningless because they were not connected to any statistical method and the cleanup levels presented at that time did not seem to correlate with either average or maximum values. *(Comment letters C and I.)*

Response. (c)(1) Uranium-238 mass is 99.27% of the total uranium mass; consequently, the two
No. 1 terms are frequently interchanged. ~~The established~~ A waste acceptance criteria of 360 pCi/g for uranium-238 is equivalent to 1,071 ppm total uranium (routinely rounded to 1,080 ppm total uranium). Please note that as a result of EPA comments, the waste acceptance criteria for uranium-238 has been changed to 346 pCi/g, or 1,030 ppm total uranium. As indicated in the comments, it is likely that testing for total uranium will be the easier, less expensive means of determining uranium concentrations. However, the final choices for testing methods to be used during remediation, both in the field and laboratory, will be made during remedial design after evaluation of the anticipated number of tests, the required accuracy and precision, the elapsed time required for each method, and the cost of the various methods.

(2) Because of the uncertainty associated with any estimate of exposure point concentrations for soil, the 95 percent upper confidence level on the calculated mean for either a normal or lognormal distribution is the recommended value used in EPA risk assessments. The total uranium waste acceptance criteria of 1,071 ppm, or 1,080 ppm is
No. 1 correct (although as a result of EPA comments, the waste acceptance criteria for uranium-238 has been changed to 346 pCi/g, or 1,030 ppm total uranium). If the total activity of uranium-238, uranium-235, and uranium-234 was 360 pCi/g, then the total uranium concentration would be 532 ppm using a conversion factor of 676 pCi/milligram (mg). The 360 pCi/g value, however, is the uranium-238 activity only, which is converted to a 1,071 ppm concentration by a 336 pCi/mg conversion factor. Since the uranium-238 mass is 99.27% of the total uranium mass, they are essentially the same. The table on page RS-3-35 illustrates this conversion.

It is agreed that the contamination in the Operable Unit 4 silos is not accurately represented by a uranium-238 comparison alone. When the figure in question was prepared, an additional figure comparing radium-226 concentrations was also drafted. The second figure was eliminated from the presentation due to time constraints. Given that radium-226 is the major contaminant in Operable Unit 4, it is interesting to note that the concentrations of uranium-238 in Operable Unit 4 are still significantly greater than those for Operable Unit 2.

(3) From a remediation viewpoint, the total activity of all radioisotopes is of concern; hence, cleanup levels have been established for many radioisotopes. For waste acceptance criteria, however, the concern is with contaminant transport and time of travel to the aquifer. All contaminants, except uranium-238, have been modelled and determined to not

impact groundwater in the future. Therefore the concentration of uranium in the disposal facility must be limited to protect groundwater.

(4) The average and maximum concentrations for total uranium presented in a chart at the October 25, 1994 public meeting were taken from Appendix A of the Operable Unit 2 FS/PP-EA. The average value is either a mean or an estimated mean, depending on the distribution of the data sets, and the maximum value is the maximum detected value in the data set. Maximum concentrations were not considered outliers in the data set, but rather "hot spots" in the sampling. The cleanup level is the concentration at which a $1x10^{-6}$ ILCR is achieved plus background. It is independent of datasets except for background data. The cleanup levels were provided for comparison.

ISSUE 4 - EXCAVATION AND MONITORING TECHNIQUES DURING REMEDIAL ACTIVITIES

Comment. (a) REAL-TIME MONITORING. (1) Several members of the community and OEPA expressed concern that "real-time" monitoring be implemented during the entire remedial action process and the data from that monitoring be provided in a timely manner. One commentor expressed interest in seeing how DOE intends to implement real-time monitoring considering open field conditions and variable wind velocities. (2) OEPA also felt that DOE should attempt to incorporate any new development in real-time monitoring from the DOE Office of Technology Development as well as the private sector. Another commentor agreed that the best available equipment and techniques be used to protect workers and the community. (3) One commentor requested that DOE develop air emission action levels so that work can be halted if real-time monitoring detects elevated emissions. *(Comment letters C, E, F, G, L, O, and BB.)*

Response. (a)(1) Real-time monitoring involves the use of devices that can quickly give an accurate reading of air emissions without having to take a sample and send it to a laboratory for time-consuming analysis. Real-time monitoring can be used for a variety of contaminants, including radioactivity. Protection of workers and the community is the main goal of a real-time monitoring program and it will be used during remedial activities; however, the type of real-time monitoring will vary depending on the activity/action. A short-term risk assessment was performed for the selected Operable Unit 2 alternative, showing that the risk to the remediation worker, nonremediation worker, and off-site citizen would be within acceptable levels. DOE is committed to monitoring and performing remedial activities to ensure that this protection is provided and will incorporate real-time monitoring, as appropriate into RA work plans. In response to the commentor who was concerned about variable wind velocities and directions, the effect of variable wind velocities and directions will be mitigated by placing monitoring devices around the construction areas. Summaries of the monitoring data, real-time and other, will be made available to EPA and OEPA and the public through the PEIC.

(2) If new technology is developed for real-time monitoring, either by DOE or by the private sector, DOE will evaluate it for use at its facilities including the FEMP site. This technology must, however, be workable in field conditions to ensure the reliability and effectiveness of the monitoring program.

(3) Action levels for stopping work based upon protection of both workers and the community already exist. The Occupational Safety and Health Act and DOE have established standards to protect workers. DOE has also established radiation dose limits for the public in DOE Order 5400.5. DOE will comply with all of these regulations during remediation of the FEMP site. It is DOE's as low as reasonably achievable (ALARA) policy to establish action levels much lower than these regulated levels to ensure that the regulated levels are not exceeded.

Comment. (b) DILUTION OF WASTE. See Issue 3(b)(1).

Response. (b) See response to Issue 3(b)(1).

Comment. (c) AS LOW AS REASONABLY ACHIEVABLE (ALARA). It was expressed that during remedial design, ALARA principles be incorporated. *(Comment letter E, F, and G.)*

Response. (c) The DOE process (required by DOE Order 5400.5) whereby exposures and releases of radioactive material are reduced to levels ALARA will be applied during RD and field activities. This ALARA process was explicitly incorporated into the development of cleanup criteria for site soil so that future radiation (residual) doses are reduced to levels as far below applicable standards as reasonably achievable. In addition, ALARA will be incorporated into the RD and RA work plans to minimize exposure to workers and the general public.

Comment. (d) POLLUTION PREVENTION. Commentors, including OEPA, expressed the need for DOE to include pollution prevention during design and implementation of the Operable Unit 2 remedial action whenever possible. One commentor suggested planting fast-growing trees around the perimeter of the site to reduce air emissions from going off-site. *(Comment letters E, G, O, and R.)*

Response. (d) Throughout the RD and RA process, appropriate measures will be evaluated, utilized, and monitored to minimize the increase of waste, emissions, runoff, etc. resulting from remedial activities. Operable Unit 2 remediation is expected to take 4.25 years; hence, planting trees that will grow quickly enough may be difficult. However, existing trees will be maintained whenever possible.

Comment. (e) TRANSITION. A commentor expressed concern over the potential for "lag time" between excavation and final disposition. *(Comment letter E.)*

Response. (e) This concern correctly implies that the period of time from soil and waste removal/excavation to the placement in the disposal facility should to be kept to a minimum. The disposal facility availability and operations will be coordinated with excavation of Operable Unit 2 materials to allow direct placement of waste, whenever possible. The main factor that may cause short delays in placement of waste in the disposal facility would be inclement weather. The actual procedures for achieving this goal will be presented in greater detail in RA work plans.

THIS PAGE INTENTIONALLY LEFT BLANK

ISSUE 5 - MONITORING/MAINTENANCE OF THE DISPOSAL FACILITY

Comment. (a) LONG-TERM MONITORING/MAINTENANCE. Members of the community felt DOE should commit to an appropriate long-term monitoring and maintenance program to verify and maintain the performance of the on-site disposal facility. One commentor requested yearly inspections. Another commentor expressed concern that this commitment to monitoring and maintenance be detailed in DOE's administrative orders. *(Comment letters E, F, G, L, O, and BB.)*

Response. (a) As stated in the Decision Summary, DOE is committed to performing long-term monitoring and maintenance of the disposal facility, the five Operable Unit 2 subunits, and surrounding areas. Specific plans (RA Work Plans) addressing the parameters and the frequency of monitoring and inspection will be developed with the detailed design activities that will be performed after the ROD has been signed. These plans will be made available for public inspection. In addition, CERCLA requires a review every five years of any remedial action with on-site disposal to ensure protection of human health and the environment. Five-year reviews are conducted to assure continued protection of human health and the environment. The specific content of the reviews will be determined in the Remedial Action Work Plan, however it is expected to include review of monitoring data, engineering controls, and maintenance activity. Monitoring and maintenance requirements have been mandated by both the State of Ohio and DOE. Operable Unit 2 monitoring and maintenance activities will be at a minimum completed in compliance with Ohio Solid Waste Landfill Regulations (Ohio Administrative Code 3745-27) and DOE Order 5820.2A (Radioactive Waste Management).

The overall protectiveness of the disposal facility has been determined through conservative modeling assumptions. The modeling utilized to establish the uranium waste acceptance criteria for the disposal facility was based on the natural protection of the gray clay located under the proposed location of the disposal facility and did not consider the additional protection due to the synthetic membranes in the engineered disposal facility, the clay liner, or the leachate collection and leak detection system. Additional factors of safety will be evaluated during the engineering design and construction of the disposal facility.

Comment. (b) COSTS AND COMMITMENT. (1) One commentor asked how DOE could be assured future generations would continue monitoring and maintenance of the disposal facility -- DOE should not impose that burden on future generations. (2) Several commentors questioned what would happen if Congress cuts DOE's budget. One commentor further

requested a description of the worst case scenarios for the disposal facility, the community, and the environment in the event of budget cuts. Another commentor stated that public notice and comment with the stakeholders should be a part of any dramatic budget cuts. The commentor further stated that if another agency were to assume DOE's remediation and operation and maintenance functions at the site, such an agency must assume all DOE ROD responsibilities. *(Comment letters A, F, M, T, and X.)*

Response. (b)(1) The commentors' concerns are acknowledged. DOE agrees that one cannot precisely predict its future actions or future generations' actions. This is a national issue spanning all types of waste and disposal facilities. While no specific enforceable mechanism has been developed to ensure multiple generational compliance (greater than 30 years), DOE is committed to monitoring and maintaining the disposal facility. The scope and frequency for monitoring will be established in the RA work plans and will be re-evaluated during the five year reviews required by CERCLA when waste remain on-site. EPA will retain regulatory authority to enforce the monitoring and review activities and any other additional maintenance or remedial activities should they be necessary.

(2) Again, the commentor's concerns are acknowledged. In this time of emphasized fiscal responsibility, budget reductions for governmental departments and agencies across the country are a political reality. If a DOE budget reduction were to occur, DOE would need to evaluate its sites across the DOE complex to determine how to best allocate its financial resources. DOE would involve its stakeholders in such decisions. (See Issue 8 for further discussion on the public participation process.) At this time a worst case scenario cannot be accurately predicted due to the number of variables associated with such a prediction. Regarding protection of the disposal facility, community, and environment, it is important to keep in mind that although institutional controls, such as fences and monitoring, will be employed to help maintain protection during and following remedial activities, reliance on such measures following waste disposal plays only a minimal role in the continued protection of human health and the environment.

No. 10a Continued federal ownership of the FEMP site is a key component of the selected remedy; however, if another governmental agency or department were to assume responsibility for the FEMP site, it would be necessary to transfer the property (i.e., deed) to that entity.

CERCLA Section 120(h) requires that before property can be sold or transferred by a federal

department or agency, the deed must state that all remedial action necessary to protect human health and the environment has been taken before the date of transfer. Thus, activities required under the Operable Unit 2 ROD would need to be complete before a transfer could occur. CERCLA further stated that the government would be responsible for any costs associated with any additional remedial action, should it be necessary, after a sale or transfer of the property.

Comment. (c) AVAILABILITY OF DATA AND REPORTS. Several commentors expressed concern that monitoring data and 5-year review reports be available to the public. One commentor included a specific list of organizations that should receive any annual or 5-year review reports (Ross, Crosby, and Morgan Townships; Butler and Hamilton Counties; EPA, OEPA, and Ohio Department of Health; and Congressional and State Representatives). *(Comment letters E, F, and O.)*

Response. (c) Any report that is submitted to EPA, including monitoring data and maintenance inspection reports, will be available to the public through the PEIC. The mailing list for any summary reports or 5-year review reports will be similar to the mailing list for the
No. 46 Site-Wide Annual Environmental Report (see response 5a on page RS-3-27 for information on CERCLA five-year reviews). The organizations and individuals listed above are currently receiving the Site-Wide Annual Environmental Report so they will continue to receive FEMP mailings unless they request to have their name deleted. At any time, a group or individual may request to be added to the mailing list for FEMP publications and notices.

THIS PAGE INTENTIONALLY LEFT BLANK

ISSUE 6 - COST

Comment. (a) ALLEGED MISREPRESENTATION OF MONITORING/MAINTENANCE COST. Many stakeholders expressed concern over the costs estimated for monitoring and maintenance of the on-site disposal facility. Many felt costs were inaccurately calculated and that the costs of Alternatives 3 and 6 would even out if the on-site disposal facility should fail. *(Comment letters A, C, F, H, J, and T.)*

Response. (a) The cost estimates in the Operable Unit 2 FS/PP-EA were prepared on a present worth basis. Present worth analysis allows projects of varying schedules to be given an unbiased comparison. In this study, present worth is basically the amount of money that would have to be invested today to completely pay for all construction costs for an alternative, plus 30 years of monitoring and maintenance costs following completion. This adheres to EPA protocol for cost estimation. The 30-year cutoff for monitoring and maintenance costs is used because costs are relatively minor (in present worth terms) after that period, and because the ability to foresee financial conditions beyond 30 years is poor.

For projects with long term monitoring and maintenance costs, the costs beyond 30 years can be estimated as the money needed today to establish a fund which, at the end of the 30-year period, would be capable of yielding sufficient interest to pay for monitoring and maintenance of the on-site disposal facility for 1000 years in the future. The most recent FS estimates and the additional money needed for the monitoring and maintenance fund are presented in the table below for Alternatives 3 and 6. Alternative 3 (Excavation and Off-Site Disposal) requires continued monitoring at the subunits where the waste was excavated while Alternative 6 (Excavation and On-Site Disposal with Off-Site Disposal of Fraction Exceeding Waste Acceptance Criteria) requires monitoring at both the subunits and at the on-site disposal facility. The costs beyond 30 years are based on the same interest rate and inflation rate assumption utilized in the overall estimate.

No. 47

Alternative	Estimate with 30 years of Monitoring & Maintenance	Additional Cost for Monitoring & Maintenance Beyond 30 Years
3: Off-site Disposal	$213,000,000	$9,000,000
6: On-site Disposal	$106,000,000	$13,000,000

Comment. (b) COST SHOULD NOT BE A FACTOR. Whether costs are accurately represented or not, others felt cost should not be a factor in the selection of a remedial action. *(Comment letter T and AA.)*

Response. (b) Cost is one of five "primary balancing criteria" (as discussed in Sections 8.0 of the Decision Summary) used to determine the most appropriate solution under the CERCLA process for selection of a remedy. Cost was therefore considered, however, as one of nine evaluation criteria it was not the sole deciding factor. See response to Issue (1)(a) for greater detail.

Comment. (c) SITE-WIDE PERSPECTIVE. One commentor was interested in reviewing the costs associated with the possibility for disposal of other operable unit waste (i.e., Operable Unit 5 and Operable Unit 3) on site. *(Comment letter E.)*

Response. (c) The costs presented in the Operable Unit 2 Proposed Plan are for the disposal of Operable Unit 2 remediation waste only. However, DOE is currently evaluating the potential for disposal of other operable unit remediation waste in the disposal facility and will provide information for public review as it becomes available and formally during the Operable Unit 5 and Operable Unit 3 public comment periods.

ISSUE 7 - FUTURE USE/OWNERSHIP

Comment. (a) OWNERSHIP OF FEMP SITE. Members of the community and OEPA suggested that DOE ownership and use of institutional controls of Operable Unit 2 or that portion of the site on which the on-site disposal facility is located is essential in protecting human health and the environment. Others expressed that protectiveness could only be ensured if DOE (or the federal government) maintains ownership of the entire site. One commentor noted that full disclosure and any restrictions to the FEMP property need to be included in the deed to the property. *(Comment letters E, G, L, O, and BB.)*

No. 10a *Response.* (a) The preferred remedial alternative for Operable Unit 2 requires continued federal ownership of the FEMP site ~~disposal facility~~ with ~~access~~ institutional controls (~~as discussed in Sections 7.0 and 9.0 of the Decision Summary~~ such as fencing and monitoring). At this time, DOE cannot declare future ownership of the entire site until completion of the remaining operable unit remedial decisions and input from the Fernald Citizen's Task Force (FCTF) [a site specific advisory board chartered in August 1993 to develop recommendations on future use(s), cleanup levels, cleanup priorities, and waste management options at the FEMP site], and other stakeholders. Should the future use(s) of the FEMP site change from federal ownership with ~~access~~ institutional controls, the Operable Unit 2 alternative would be re-evaluated to ensure protection for the designated use. Note that any decision to transfer ownership to a non-federal entity would be a significant change fundamentally altering the basic features of the selected remedy resulting in the amendment of the ROD.

~~Institutional controls such as fencing and monitoring will be implemented to limit access to the disposal facility and Operable Unit 2 subunits.~~ Restrictions to the use of the property will be noted on the property deed before the property could be sold or transferred to another party. Refer to Issue 5(b)(2) for more discussion on deed restrictions.

Comment. (b) ABOVE BACKGROUND LEVELS -- PUBLIC'S RIGHT-TO-KNOW. One commentor felt that the public had the right to know whenever "materials" released from the federal control were above background levels (even though below cleanup levels). The commentor felt that posting information about areas that are above background levels (once remedial activities are complete) is essential for the public to make informed choices as to any exposure they might receive. *(Comment letter F.)*

Response. (b) At this time, end-use of the property has not been determined. However, DOE will identify any necessary use restrictions to ensure safe use of the property in areas that are above background levels (but meet or are below cleanup criteria). DOE, EPA, and OEPA, as well as the FCTF, maintain that the future use(s) and cleanup levels on the FEMP site will be protective of human health and the environment.

Comment. (c) FUTURE MONETARY BENEFIT. Commentors expressed the opinion that it is in the best interest of area residents as well as the federal government to have contaminants removed to enable the site to be converted to a use which will be a monetary asset to both the community and federal government. One commentor was concerned that DOE will bury the waste and move away leaving area residents with no benefit from the site having been there. *(Comment letters H and M.)*

Response. (c) DOE, EPA, and OEPA are working closely with the FCTF [as discussed in Issue 7(a)] in an effort to logically reach a balanced decision regarding the most feasible future land use(s) for the FEMP site. The FCTF, based on input from the community and other stakeholders, will make a recommendation to DOE as to what the end-use of the FEMP site should be. The FCTF will embody several values in their recommendation including environmental, economic, social and human, and long-term management. DOE will give full consideration to the FCTF recommendation when making its decision on future use(s) of the FEMP site.

ISSUE 8 - PUBLIC PARTICIPATION PROCESS

Comment. (a) EXTENSION OF THE PUBLIC COMMENT PERIOD. On November 21, 1994 a formal request to extend the public comment period by 30 days was made by Betty Brown on behalf of the Ross Township Trustees. On December 20, 1994, the Ross Township Trustees requested a second 30-day extension. Other stakeholders expressed concern about not having sufficient time to review the remedial alternatives. *(Comment letters B, U, and AA.)*

Response. (a) DOE considered both requests for extension of the public review period in accordance with the provision of the NCP, 40 Code of Federal Regulations (CFR) 300.430(f)(3)(i)(C). In accordance with Sections XVIII.B.5 and XVIII.D of the 1991 Amended Consent Agreement, DOE requested EPA concurrence for the initial 30-day schedule extension to the public review period. The EPA orally concurred on November 22, 1994 with written concurrence on December 14, 1994. DOE issued formal public notification of the first extension on November 30, 1994. Following the second 30-day extension request received on December 30, 1994, DOE granted a 20-day extension to allow for appropriate stakeholder review while maintaining established schedules. Documentation of these decisions can be found in the Administrative Record located locally in the PEIC at 10845 Hamilton-Cleves Highway, Harrison, Ohio 45030.

Comment. (b) PUBLIC INVOLVEMENT AFTER THE ROD. Stakeholders, including OEPA, expressed a desire to continue the same level of public involvement in post-RI/FS activities. Some members of the community requested that DOE formally specify the level of public involvement during RD and RA in the ROD. *(Comment letters E, F, G, H, L, and O.)*

Response. (b) As a result of some of these same concerns during the Operable Unit 4 public review process, DOE revised the FEMP Community Relations Plan to include public participation during RD and RA.

The Revised Community Relations Plan was reviewed by OEPA and EPA and was distributed for stakeholder review. OEPA approved the document in December 1994 and EPA approved the document in January 1995. Additional revisions of the Community Relations Plan are anticipated to focus on public involvement during long-term monitoring and maintenance and CERCLA five-year reviews. The frequency for the review and revision of the Community Relations Plan will be agreed upon between EPA and DOE after input is solicited from the public.

Comment. (c) FUTURE REVIEW OF THE ROD. One commentor was concerned that a mechanism for stakeholders to initiate a request for future review or possible amendment of the ROD be included in the ROD. The commentor was also concerned that if for some reason the ROD could not be fully implemented, the ROD should be reopened with full public participation. This commentor also stated that the ROD should be enforceable with fines and lawsuits, if necessary. *(Comment letter F.)*

Response. (c) The ROD is a signed, legally enforceable document. After signature of the ROD by EPA, if the remedial action differs significantly from the remedy selected in the ROD with respect to scope, performance, or cost, DOE would either:

1) Publish an explanation of significant differences (when a remedial action difference significantly changes, but does not fundamentally alter the remedy selected in the ROD with respect to scope, performance, or cost) to be made available to the public in the Administrative Record and Information Repository (i.e., PEIC) along with publication in a major local newspaper of general circulation (a notice briefly summarizing this explanation including the reasons for such differences); or

2) Propose an amendment to the ROD (when a remedial action difference fundamentally alters the basic features of the selected remedy with respect to scope, performance, or cost). To amend the ROD, DOE would issue a notice of availability and brief description of the proposed amendment in a major local newspaper of general circulation; make the proposed amendment to the ROD and information supporting the decision available for public comment; and provide a reasonable opportunity to comment, not less than 30 calendar days.

No. 21 In the event of a ROD modification, DOE will notify stakeholders and provide an opportunity to voice questions and concerns. A workshop would be offered if the modification is an "explanation of significant differences." In the case of a ROD amendment, a workshop could be provided if there was significant interest from the public in having both a formal public meeting and an informational workshop.

No. 13 In response to concerns regarding full implementation of the ROD, the primary enforcement vehicle of the ROD is the 1991 Amended Consent Agreement which requires DOE to implement, subject to EPA approval, remedial design (RD) and remedial action (RA). The 1992 Amended Consent Agreement includes provisions for stipulated penalties in the event of DOE non-compliance with RD and RA requirements. Non-compliance would include failure by DOE to implement the remedy selected in the ROD. In addition, Section 310(a)(1) of CERCLA [42 U.S.C. §9659(a)(1)] affords persons the right, under certain circumstances, to take civil action to enforce the terms of the 1991 Amended Consent Agreement.

Comment. (d) NTS REVIEW. The NTS Citizens Advisory Board (CAB) is concerned that NTS communities have been given insufficient time to review and comment on many issues associated with the FEMP site. The CAB felt that NTS communities should be afforded the same time frame as Ohio residents to consider the issues. *(Comment letter Y.)*

Response. (d) DOE agrees that the NTS communities should be given the same amount of time to consider and comment on issues at the FEMP site that could potentially impact communities surrounding the NTS. Representatives from Nevada, including the CAB, are now on the FEMP site document mailing list and postcards were mailed to the CAB and State announcing both public comment period extensions. If future problems in obtaining FEMP site documents for review arise, stakeholders should contact:

Gary Stegner, Director
Public Information
Fernald Area Office
U.S. Department of Energy
P.O. Box 538705
Cincinnati, Ohio 45253-8705
Phone: (513) 648-3153

Comment. (e) PUBLIC UNDERSTANDING. One commentor was concerned that the public does not truly understand what a permanent disposal facility means for the area. *(Comment letter H.)*

Response. (e) DOE intends to continue involving community members and other interested parties in decision making at the FEMP site. DOE has provided the public with several opportunities to comment on decisions relating to the remediation of Operable Unit 2. Section 2.0 of this Responsiveness Summary discusses the community relation activities that were conducted for stakeholders interested in the Operable Unit 2 remedial action. DOE is committed to public involvement to ensure informed decisions are made. If the commentor or other stakeholders have any suggestions for improving DOE's public involvement program, please contact Gary Stegner at the address listed in the preceding paragraphs.

ISSUE 9 - MISREPRESENTATION OF RISK AND BACKGROUND LEVELS

Comment. (a) RISK LEVELS. One commentor expressed concern that an Incremental Lifetime Cancer Risk (ILCR) of $1x10^{-6}$ (one in one million) is an unjustifiable and ultraconservative risk level and that the Fernald Citizens Task Force will recommend a remediation goal of $1x10^{-5}$ (one in one hundred thousand which is equivalent to ten in one million) in their report to DOE. The commentor also recommended that EPA reevaluate the "slope factor" method for determining risk due to radioactivity. Another commentor declared the opposite by saying that there is no safe threshold for human exposure to radioactivity. One commentor felt that the cleanup goal should be background levels. *(Comment letters C, F, and Z.)*

Response. (a) The ILCR range identified by CERCLA regulations is $1x10^{-6}$ to $1x10^{-4}$ for the entire site. Separate sets of cleanup levels in Operable Unit 2 were evaluated based on each of the $1x10^{-6}$, $1x10^{-5}$, and $1x10^{-4}$ ILCR levels. It should be noted that while the cleanup levels set for each of these ILCR levels are protective of human health, it is also important to calculate the total risk for a remedial alternative from the total exposure to multiple contaminants of concern through multiple exposure pathways (i.e., additive risk). This evaluation was conducted in the Operable Unit 2 FS Residual Risk Assessment.

Because of this additive nature of risk and risk contributed from other operable units, cleanup levels based on $1x10^{-6}$ ILCR risk were used as the point of departure for evaluating Operable Unit 2 alternatives. This is consistent with the evaluations conducted in the Operable Unit 1 and Operable Unit 4 RI/FS documents.

The Amended Consent Agreement schedule required Operable Unit 2 to identify a preferred remedial alternative before the Fernald Citizens Task Force (FCTF) made final recommendations. As identified in the Operable Unit 2 FS/PP-EA, DOE will give full consideration to the FCTF recommendation.

The slope factors used to determine the risk from radioactivity were obtained from the most current edition available at the time of the evaluation (1993) of the EPA Health Effects Assessment Summary Table. This table contains the best reliable information that

is currently available and is required to be used in CERCLA risk assessments. Any significant changes to slope factors in the future will be evaluated prior to initiation of remedial action and during the CERCLA 5-year reviews after the remedial action is initiated. Should a change to the remedial action be warranted, a modification to the ROD will be proposed and presented for public comment. See the response to Issue 8(c) for a discussion of the ROD modification and associated public involvement process.

Comment. (b) BACKGROUND LEVELS. One commentor felt that Operable Unit 2 background levels were confusing and possibly wrong. As an example, the commentor cited specific tables from the Operable Unit 2 Proposed Plan (Tables 5.2, 5.3, and 5.4) in which the sum of the background levels for the uranium isotopes did not equal the background level for total uranium. Additionally, it was also noted that the background levels for Operable Unit 2 are inconsistent with other operable units and the statistical uncertainty of the background values is not presented. *(Comment letter C.)*

Response. (b) The background values used for Operable Unit 2 are based on the data in the EPA approved background reports for groundwater and soil for the FEMP site. The 95th percentile value of the data was used to represent background in these reports. The background data for each of the Operable Unit RI/FS documents were the same. These documents are referenced in the Operable Unit 2 RI Report and can be found in the Administrative Record at the PEIC. It is important when comparing numbers to be sure to note whether the background is for surface soil or subsurface soil. Because of the planned excavations, Operable Unit 2 evaluations used the background values for subsurface soil.

In the Operable Unit 2 Proposed Plan, the units for the uranium isotopes are in pCi/g while the unit for total uranium is in parts per million (ppm), therefore they are not directly additive. The background value for total uranium is determined from a different test method than the uranium isotopes. The summation of the isotopes converted to total uranium in ppm equals the total uranium value within the precision of the test methods. Table 9-1 on the following page illustrates this conversion.

TABLE RS-9-1

CONVERSION OF URANIUM ISOTOPIC ACTIVITY TO TOTAL URANIUM IN MG/KG (PPM) FOR SURFACE SOIL

	Activity pCi/g	Conversion (divide by)	mg/kg
Uranium-234	1.24	$6.22 \times 10^{+3}$	2.0×10^{-4}
Uranium-235/236	0.145	2.16	0.07
Uranium-238	1.22	3.3×10^{-1}	3.63
Total Uranium			3.8

THIS PAGE INTENTIONALLY LEFT BLANK

ISSUE 10 - USE OF NEW TECHNOLOGY IN THE FUTURE

Comment. (a) REVIEW OF NEW TECHNOLOGIES. One commentor questioned whether there were any innovative technologies that could have been incorporated into the Operable Unit 2 preferred remedial alternative. Several commentors, including OEPA, felt that DOE should continue to review and consider new technologies, as well as support the development of technology which may reduce the volume, toxicity, or mobility of the waste for on-site disposal or improve the design of the disposal facility itself. It was expressed that this review should be carried out both before and after waste is placed in the on-site disposal facility. One commentor stated that the technology reviews should be included in the CERCLA 5-year reviews. *(Comment letters C, E, F, G, and O.)*

Response. (a) DOE considered a range of technologies for use in the Operable Unit 2 remedial action. Two "innovative" technologies that were evaluated were vitrification and soil washing. These technologies were screened out due to either effectiveness, implementability, or cost effectiveness. The details of these and the other technologies that were considered are included in the Operable Unit 2 FS/PP-EA.

Because DOE has many other sites that will have to manage, treat, and/or dispose of low-level radioactive waste, new technologies will continue to be evaluated. The DOE Office of Technology Development oversees technology research and demonstrations at many facilities across the nation. As stated in Section 8.0 of the Decision Summary, if a technology is developed that may significantly reduce the volume, toxicity, or mobility of Operable Unit 2 waste, it will be thoroughly evaluated for use at the FEMP site.

No. 16 Engineering studies will be performed on the geochemical barriers and brickmaking technologies during the Remedial Design process. These studies would be completed in a phased approach to determine (1) the effectiveness of the two technologies, and (2) the need for additional studies. DOE would proceed with further studies only if it is determined that the technologies are cost effective and reduce contaminant toxicity, mobility, or volume. If a decision was made to implement a new technology, the Administrative Record would be reopened and public comments would be addressed before any additional action would be taken. See response Issue 8(c) for a discussion of the ROD modification and associated public involvement process.

Comment. (b) RETRIEVABILITY OF WASTE. One commentor expressed that the disposal facility should be built in such a way that the contents are safely retrievable. Thus, if future remediation efforts would be necessary or if a new technology is developed, the waste

could be accessed without unnecessary risk to workers, the community, or the environment. *(Comment letter F.)*

Response. (b) Because the Operable Unit 2 remediation waste will be disposed above ground, the waste could be excavated should it become necessary. Records describing the types of waste in each area of the facility will be kept such that specific areas of remediation waste could be retrieved if necessary. If it is necessary to excavate the waste, such activity would be planned and implemented in a manner such that air emissions and exposure to radiation will be kept to a minimum and would be in compliance with DOE and EPA standards.

THIS PAGE INTENTIONALLY LEFT BLANK

ISSUE 11 - INTEGRATION AND CONSISTENCY WITH OTHER OPERABLE UNITS

Comment. (a) CONSISTENT CLEANUP LEVELS. One commentor contended that Operable Unit 2 cleanup levels must be consistent with other operable units (i.e., Operable Unit 1 is 58 pCi/g of uranium-238 and Operable Unit 2 lists four different levels). *(Comment letter I.)*

Response. (a) The cleanup levels for Operable Unit 2 are based on the same level of protection as the cleanup levels for Operable Unit 4 and Operable Unit 1. Specifically, this level of protection is not to cause a greater than one in one million increase in an incremental lifetime cancer risk (ILCR). The main factor that may cause different cleanup levels for the same level of protection is amount of native till (a type of soil) that is protecting the Great Miami Aquifer. The Operable Unit 2 subunits are not contiguous areas, and therefore, have differing types of native till and hydrogeology under each subunit. These specific conditions were used to develop the cleanup levels for each subunit in Operable Unit 2. For example, the uranium-238 cleanup level for the Inactive Flyash Pile is 6.12 pCi/g, as compared to the Lime Sludge Ponds at 45.3 pCi/g. A portion of the Inactive Flyash Pile is located directly over the Great Miami Aquifer while the Lime Sludge Ponds have approximately 30 feet of soil between the bottom of the subunit and the top of the aquifer. Similar differences in the other operable units result in different cleanup levels but the same level of protectiveness. These differing cleanup levels allow DOE to ensure protection of the aquifer in the most vulnerable areas. The methodologies to develop cleanup levels were consistent among operable units, but location-specific.

Comment. (b) COMPREHENSIVE ROD. One commentor suggested that DOE take all RODs at the FEMP site and roll them into one "big picture" ROD that would incorporate any improvements in wording over time. *(Comment letter F.)*

Response. (b) DOE incorporates any new or improved information into subsequent FEMP documentation (including RODs), where appropriate (e.g., lessons learned). Following the issuance of the ROD for the last of five operable units, the Amended Consent Agreement provides for a Comprehensive Site-Wide Operable Unit (Operable Unit 6). If needed, Operable Unit 6 (as discussed in Section 2.0 of the Decision Summary) will be created to perform a final assessment from a site-wide perspective to ensure that ongoing or planned

remedial action identified in the RODs for the five operable units provide a comprehensive remedy for the FEMP site which is protective of human health and the environment. If it is determined that the remedial actions specified in the RODs for Operable Units 1 through 5 are not protective from a site-wide perspective, an Operable Unit 6 FS would be initiated with a corresponding ROD if an action alternative is selected. For any wording improvements that affect the implementation of the preferred remedial alternative or the basis for the selection of the alternative, a modification to a ROD can be considered. This would require acceptance of the changes by EPA and a formal public comment period. See response to Issue 8(c) for a discussion of the ROD modification and associated public involvement process.

ISSUE 12 - TRANSPORTATION

Comment. (a) SAFER TRANSPORTATION METHODS. Some members of the community expressed concerns related to the transportation of Operable Unit 2 waste (exceeding waste acceptance criteria) from the FEMP site to the off-site disposal facility (e.g., Envirocare in Clive, Utah or the Nevada Test Site). One individual suggested exploring encapsulation technologies to ensure the safe transport of waste. *(Comment letters J and Z.)*

Response. (a) The amount of Operable Unit 2 waste expected to exceed waste acceptance criteria is approximately 3,100 cubic yards (not including the approximate 300 cubic yards of Firing Range material to be shipped off site). This material is expected to range between ~~360~~ 346 and 1,580 pCi/g of uranium-238. These concentrations are lower than the levels in the 600,000 cubic yards of waste pit material from Operable Unit 1 (average uranium-238 concentration of 5,563 pCi/g) where the preferred alternative has been identified as transportation of these waste without encapsulation. Based on evaluation of the same nine criteria that the Operable Unit 1 decision was based on, it is not believed that any treatment other than drying (i.e., removal of excess water) would be needed to transport Operable Unit 2 remediation waste.

No. 1

The relatively small quantity of Operable Unit 2 material requiring off-site disposal would be packaged in containers suitable for shipment by rail or truck. An off-site disposal facility has not been identified; however, Envirocare in Clive, Utah was used as the representative off-site disposal facility for purposes of the cost estimate. If the representative site is selected, Operable Unit 2 waste material would follow procedures similar to those established by Operable Unit 1. Operable Unit 1 currently plans to ship waste material by rail in gondola cars with hard tops. Each gondola car would be lined with a flexible membrane liner, bulk material would be placed within the liner, the liner would be tied at the top to enclose the material, and the hard top would be affixed to the gondola car prior to shipment. A compilation of risks associated with the transportation of waste off site was completed for the Operable Unit 2 FS and provided as Appendix E in the Operable Unit 2 FS/PP-EA.

THIS PAGE INTENTIONALLY LEFT BLANK

ISSUE 13 - PROCESS KNOWLEDGE

Comment. (a) One commentor was concerned that process knowledge was not utilized in determining the contents of the Solid Waste Landfill. *(Comment letter I.)*

Response. (a) DOE conducted extensive research during the RI. This research included in-depth record searches and interviews with current and former employees. No records were found to exist and employee knowledge of what was disposed in the Solid Waste Landfill was limited. Laboratory testing to determine contaminant levels and trenching to perform a visible inspection of waste material were conducted in the Solid Waste Landfill during the RI. In addition, remedial activities in the Solid Waste Landfill will include the excavation and screening of all material.

THIS PAGE INTENTIONALLY LEFT BLANK

4.0 SUMMARY OF COMMENTS NOT RESULTING IN ISSUES

DOE determined that all public comments received resulted in issues.

THIS PAGE INTENTIONALLY LEFT BLANK

ATTACHMENT I

FORMAL WRITTEN AND ORAL COMMENTS

MR. WILLSEY: Sorry, one more thing, Don and I have to leave because we have a levy on and we're going to get up to the Board of Elections, we're supposed to be up there. Thank you very much.

MR. WARNER: We appreciate your participation. Richard Strimple.

MR. STRIMPLE: I'm going to just make a little statement on water aquifers. If it is polluted, it's already polluted.

MR. WARNER: You are Richard Strimple?

MR. STRIMPLE: Yes, I'm sorry. It's polluted forever and there's no going to be a permanent digging it up and hauling it out. You will dilute it, you will cut your options, but for somebody to think that they're going to clean it up, it's spitting into the wind, period.

MR. WARNER: Thank you, Richard. Russ Beckner.

MR. BECKNER: My name is Russ Beckner, I'm a resident of Ross Township and live 1,500 feet from the site.

I would just like to go on record

1 that I support Alternative 3 versus 6 for the
2 following reasons: One, I feel it's definitely the
3 safest choice for the area. Second, long term it
4 is definitely the least expensive, and long term
5 would only be a few decades, not a century. Today
6 no one can guarantee that a quality maintenance
7 program will be put in place and maintained because
8 the people doing it are very possibly not even
9 alive today, and I think some of the things we've
10 seen occur at this site in the last four decades
11 confirm that.
12 Also I would ask our EPA
13 representatives to give a second thought, would
14 they be so positive around the plan they support if
15 they lived 1,500 feet from the site as opposed to
16 the locations they mentioned. And the last thing,
17 as I said earlier, there's no one that can design
18 anything today that hasn't been designed before and
19 guarantee it will have a 500-year life. Thank
20 you.
21 MR. WARNER: Thank you, Russ. Are
22 there any other comments from the floor? That was
23 the last of our registered commenters. Yes, sir,
24 you want to come up and state your name, please.

6793 Comment B

Board of Trustees
Ross Township
Donald H. Thiem
David M. Young
Thomas E. Willsey, Jr.

Mr. Gary Stegner, Director
Public Information
Fernald Area Office

December 14, 1994

Mr. Gary Stegner,

The Ross Township Trustees representing Ross Township wish to express our objection with the recent plans to store waste material at the Fernald site.

Assurances that the clean up would be a complete removal of all contaminated materials has been told to us time and again over the years. For the DOE and the State and Federal EPA to change direction at this late date in the clean up operation is criminal.

We speak to all agencies before mentioned to reconsider this plan for all our sakes. Remove all the waste as originally planned.

Donald H. Thiem
David M. Young
Thomas E. Willsey, Jr.
Board of Trustees, Ross Township

ROSS TOWNSHIP

TRUSTEES: Donald H. Thiem • Thomas E. Willsey • David M. Young

CLERK: Betty J. Brown

November 21, 1994

Gary Stegner
Director of Public Information
Fernald Area Office

Dear Mr. Stegner:

The Ross Township Board of Trustees request an extension of 30 days regarding comments of the proposed plan for remedial actions at operably Unit 2. Extension requested being from November 25th to December 25th.

Sincerely,

Ross Township
Board of Trustees

Thomas E. Willsey
Donald H. Thiem
David M. Young

Betty J. Brown
By: Betty J. Brown
Ross Township Clerk

2143 Timberman Road • Hamilton, Ohio 45013 • Phone/FAX (513) 863-2337

1994 .11. 22

Mr. Gary Stegner, Director
Public Information
Fernald Area Office
U. S. Department of Energy
P. O. Box 538705
Cincinnati, OH 45253-8705

Dear Mr. Stegner:

My comments on the cleanup alternatives being considered in the *Proposed Plan for Remedial Actions at Operable Unit 2* (Draft DOE/EA-0953, dtd August 1994) and on handouts provided at the public meetings on October 25 and November 8, 1994 are enumerated in the following paragraphs.

Comment 1. I am opposed to the preferred alternative to excavate and dispose Operable Unit 2 material on-site with off-site disposal of the fraction which exceeds waste acceptance criteria (Alternative 6).The DOE should reexamine the alternatives because it is not obvious that excavation and off-site disposal (Alternative 3) is not a better alternative from either a technical or economic viewpoint. Even though the present worth of Alternative 3 is less than a factor of 2 greater than the preferred alternative there are costs which have not been evaluated with regard to the long term maintenance, monitoring and protection of the on-site disposal cell.These costs , in the long term, could very well double the total cost of the preferred alternative.

Comment 2. The proposed disposal cell location on the Fernald Site is not protective to the Great Miami Aquifer.The location identified puts the disposal cell directly over a region of the aquifer (Ross Section of the New Haven Trough) which, at the present time based on data from OU5, is not contaminated with uranium in surface or sub-surface soil , perched water or to any signicant degree in the aquifer itself based on Type 2 well data. Failure of the disposal cell composite liner or composite cap would provide direct access of contamination to the soil, to perched water and to the aquifer.Additional contamination of uncontaminated areas is unacceptable to me.

Comment 3. The design of the disposal cell is not suitable for long term containment of contaminants. Climatological conditions in southwestern Ohio can be agressive and

severe,and cause deterioration particularly in materials like the HDPE membranes and the geotextile fabric.If some failure of the disposal cell containment were detected at some future time,the only way to fix the problem would be to dig into the cell thus providing additional potential for contamination of the environment. Costs for repair of the cell are indeterminate at present but can be reasonably expected to be large.Similar disposal cells in the desert southwest or other arid regions of the United States may very well be suitable locations.The proposed preferred alternative is an example of the "suck, muck and truck " way of doing remediation work.Are there no innovative technologies which could be applied to demonstrate a better way?

Comment 4. An ILCR of 10^{-6} is an unjustified, ultraconservative risk level.Even though it is stated in 5.1.2.1 of the FS for OU2 that this risk level would help "ensure that the remediation goal for the entire FEMP site would not exceed 1×10^{-4} due to the additive nature of risks " ,it is not intuitively obvious that this , in fact, is true or justifies such an ultraconservative point of departure.The NCRP Report No. 96 *(Comparative Carcinogenicity of Ionizing Radiation and Chemicals)* gives a value for fatal cancer risk over 70 years for exposure to natural background radiation including radon exposure in homes of 3×10^{-3}, or more than two orders of magnitude greater risk from background radiation .A similar result is obtained using the recommendations in NCRP Report No. 116 (*Limitation of Exposure to Ionizing Radiation*) for exposure of members of the public.Using the 1 mSv/yr recommended limit, I calculate a lifetime risk of 4.5×10^{-3},which is in good agreement with the previous value and again is more than two orders of magnitude greater than is being used in OU2.Accepting the fact that 1 in 3 Americans will develop fatal cancer means that the total risk including the incremental risk from OU2 remediation is 0.333334 vice 0.333333 from other causes.This is statistically insignificant increased risk and I suspect it would be impossible to detect in any reasonably sized cancer mortality study.The DOE should reconsider the continued use of this ultraconservative ILCR for OU2.The Proposed Plan already contains the necessary numbers within the EPA target range for CERCLA cleanup sites to show that there are clear economic incentives to the use of an order of magnitude larger ILCR from a cleanup level viewpoint without undue increased risk. It is also my recollection that the Fernald Citizens Task Force will recommend in their report to the DOE that an ILCR of 1×10^{-5} be used for remediation goals at the FEMP as discussed at their October 8, 1994 meeting. I also recommend that the U. S.E.P.A. reevaluate their "slope factor" method for determining risk due to radioactivities.It is time that more modern science be employed for evaluation of these risk factors.

Comment 5. Data for background levels of radioactivites in the Proposed Plan are confusing at best and misleading at worst. In Tables 5.2, 5.3 and 5.4 values are given for the three major isotopes of uranium and "Uranium-Total". In these tables the sum of the three major uranium isotopes does not equal the total uranium (2.3 vice 3.4). This is clearly wrong.It should also be noted that in the FS for OU2 the numbers are given to three significant figures and the sum of the uranium isotopes is 2.41 with a total uranium of 3.4.These inconsistencies are nowhere explained.Of greater concern is the fact that OU5 uses a value of 3.73 mg/kg for the 95th percentile surface

background value, with an average range of surface background values of 2.56 to 4.83 mg/kg.The 3.73 mg/kg value converts to 2.52 pCi/g using a value of 676 pCi/mg for normal uranium.This value does not agree with the value used by OU2. To further add to the confusion,the Site Environmental Report for 1993 states on page 72 that "Results from this study show that the mean uranium concentration is 2.1 pCi/g with an upper limit (95% tolerance limit) of 2.8 pCi/g." Although for practical radiation protection purposes the OU5 and Site Environmental Report numbers are in reasonable agreement,the OU2 number is not.This is critically important because cleanup levels are compared to the value of background.Further,background values can not be used as single point values unless some statistical uncertainty estimate is clearly cited. I have been unable to find in any OU2 documents any statements regarding statistical uncertainties or confidence interval estimates of mean values. As a minimum, the DOE should take steps to require FERMCO to use a consistent set of values for such important parameters as background uranium concentrations in the various environmental media as well as requiring that statistical estimates of the variance of these parameters be specified.

Comment 6. The numbers presented at the October 25, 1994 public meeting by FERMCO are confusing and misleading. In the chart "Comparison of FEMP Waste Average U-238 Concentrations in Each Operable Unit " there is a line with no labels on either the ordinate or abscissa. In any event, the Proposed OU2 On-Site WAC is 360 pCi/g or 1071 ppm U-238. Again, for normal uranium, 360 pCi/g converts to724 ppm U-total or about a factor of 2 less ppm.It is true that in normal uranium,U-238 has an isotopic abundance of 99.28% and U-234 is only 0.0054%. It is also true that about half of the total radioactivity is from U-234.From a remediation viewpoint, the total radioactivity from uranium and the other radioisotopes is the concern.It is also inappropriate to cite on this chart OU4 numbers because in OU4 , uranium is not the major issue-Ra-226 is the issue.In any event, I don't understand this chart.In the same presentation a chart labled "<u>OU2 WASTE VOLUME</u>" was discussed.Values for average contamination and maximum contamination are displayed in units of pCi/g U-238. These values are meaningless because average values should only be used if it has been shown that the measurements are normally distributed and then an estimate of the variance of the measurements should be given also.Maximum contamination levels are also meaningless unless some estimator is defined-is this an outlier is the basic question? The cleanup levels identified also do not seem to correlate with either average or maximum levels.Again,by only using U-238 only half of the total radioactivity of concern is shown.From a practical viewpoint,it would seem to me to be easier and cheaper to measure total uranium by chemical analysis,e.g. laser fluorimetry,than to stipulate a cleanup level on U-238 level which implies far more expensive isotopic analysis.

Comment 7. In the public meeting on October 25, 1994 the FERMCO presenter (Jim Williams) stated in a response to a question from the audience that real time

airborne radioactivity monitoring would be used in field activities during OU2 remediation work.I am curious to learn how FERMCO intends to do this. It seems to me that this is not a trivial task considering that ordinary air monitoring in open,field conditions ,with variable wind velocities and directions is not obvious or straight-forward.

Summary. I have identified my concerns with the Proposed Plan for OU2 and reiterate that I am opposed to the selected preferred alternative.Overall I judge that the technical facts in the Proposed Plan lack scientific rigor and the conclusions presented are not persuasive.

Very Truly

Louis C. Bogar

Louis C. Bogar

[redacted]

6793
Comment D

Jan 14, 1995

To:
Gary Stegner
Fernald Area Office
PO Box 538705
Cincinnati, Ohio 45253

From
Robert L Copeland
Morgan Township Trustee
[redacted]

As a member of the Morgan Board of Trustees, and as the newly appointed (1/3/95) representative of that board to the Fernald clean-up effort, I would like to express to you our feelings and concerns with regard to the current proposal to construct an on site disposal facility for certain wastes.

There is not unanimity on our Board as to this proposal (one trustee feels nothing should be left on site), but I and the other trustee support the concept of disposing of some waste on site under certain conditions. Please do not consider this statement as a carte blanche approval of this disposal plan under any and all conditions. Rather it is my feeling that it only makes sense to dispose of (store) relatively innocuous materials such as relatively uncontaminated building debris, soil, etc. to avoid the high cost of transporting this material elsewhere. We are not scientists or nuclear waste experts but we do recognize that some wastes could be stored (this disposal proposal is really not disposal but long term storage) safely and reasonably on site under the right conditions.

We do have great concerns with any activity of this type in as much as the location of the site, as we all know, is above a sole source acquifer which supplies water to virtually the entire area. We are also concerned by the size of the cell which has been proposed, some as large as 2000 ft x 4000 ft which is 183.65 acres. We have also been told this cell will be as high as 50 ft, which seems to provide space for ≈ 15 million cubic yards of waste. Can there possibly be this much material on the site which can be safely stored in this manner? I don't think so.

Another concern we have is the possibility of bringing waste in from other sites. We are absolutely and unequivocally opposed to any such proposal.

000294

This possible importation of waste seems to involve two possibilities. One appears to be the importation of waste from other DOE sites and or number two, the answer to Ohio's duty to the Great Lakes Compact for low level radioactive waste disposal for six states for twenty years. Surely there is no possibility of either of these scenarios occurring, but we want you to clearly understand that we are adamantly opposed to either or both scenarios as they simply aren't viable.

Many months ago when trial balloons were floated by DOE and FERMCO about the possibility of using sites in Morgan and Ross Townships (off the Fernald site) to store waste, it was obvious lunacy. At that time I expressed the concern that maybe this trial balloon was floated only as an attempt to make on site storage more palatable. Now I am wondering if we may be hearing rumors of waste importation to get us to accept long term (permanent) storage of Fernald waste on the Fernald site.

If my suspicions are correct, please don't play games with us. We are willing to consider, under the right conditions, storage of some relatively innocuous waste materials for on site long term waste storage, but absolutely no importation of any waste from any site will be condoned by ~~also~~ us. Also all very hazardous wastes must be removed.

Sincerely;
Robert L Copeland
Morgan Township Trustee
Butler County, Ohio.

000295

Comment E

1 MR. WILLIAMS: Those are millions.
2 MS. CRAWFORD: Millions. Does that
3 include the cost of the cell or does the cost of
4 the cell fall under OU-5?
5 MR. WILLIAMS: That includes the
6 cost of the cell for Operable Unit 2, for Operable
7 Unit 2 volumes, that's correct.
8 MS. CRAWFORD: So to get an overall
9 cost of the cell itself, are we able to do that
10 yet?
11 MR. WILLIAMS: Yes, we can, and in
12 fact OU-5 will be submitting their Feasibility
13 Study next week, and that will have the official
14 comparable cost estimates for the OU-5 volumes of
15 material as well as they're also looking at the
16 off-site alternative. So on more of a site-wide
17 perspective, it will have the capability of looking
18 at on-site versus off-site for a wider range of
19 cleanup volumes. This is specific to the 300,000
20 cubic yards for OU-2.
21 MS. CRAWFORD: Now, I need your
22 little computer man to put up his other little
23 thing that he had up there with them two little hot
24 pink boxes on it. My question is what's in them

1 sense of anything like derbies and so forth. The
2 operational history of the landfill is not well
3 understood. They didn't keep records. It was
4 essentially a place to put stuff you didn't want
5 anymore, and so they did that. However, just --
6 this is a good time to explain how things would
7 operate. How do you make sure you didn't miss one,
8 how do you know what you're putting in the cell is
9 what you say you're putting into the disposal
10 facility, and the plan is for every unit of
11 material that comes out of the waste units will be
12 screened and sampled right there before it's taken
13 to the disposal facility to insure that it meets
14 the waste acceptance criteria, and then that
15 characterization will be verified from the
16 stockpile at the disposal facility. It will be
17 looked at twice before it goes into the disposal
18 facility, and if it doesn't meet the waste
19 acceptance, then it doesn't go into the facility.
20 MS. CRAWFORD: Is there going to be
21 like a huge lag time by the time you pull it out of
22 this thing, you test it, and you sift through it to
23 make sure it's what you say it is until you get it
24 to put it in the waste cell?

November 20, 1994

RE: DOE-FEMP
O.U.2 Proposed
Plan - Comments

Mr. Gary Stegner
Director, Public Information
U.S. D.O.E. Fernald Area Office
P.O. Box 538705
Cincinnati, OH 45253-8705

Dear Mr. Stegner:

The purpose of this letter is to provide my official comments on the Operable Unit 2 Proposed Plan. I want to make it very clear that I am commenting as an individual resident and not as the president of F.R.E.S.H., Inc. or as a member of the Fernald Citizens Task Force. So, my official comments as an individual citizens living around the Fernald FEMP I would like the following comments instituted into the final plan.

1. While I am not extremely happy with the possibility of having a on-site disposal cell, I believe the preferred alternative is the appropriate one, when considered in the context of overall site clean-up. I support the idea of a balanced approach where the low volume high concentration wastes go off-site for disposal and the high volume lower concentration wastes are disposed of on-site in a engineered facility.

2. The O.U. 2 ROD must place restrictions on the use of the on-site disposal facility. The following restrictions must be put into the ROD:

   a.) No off-site waste will ever be disposed of in this disposal cell or anywhere else on the Fernald FEMP property.

   b.) The waste acceptance criteria (WAC) for Uranium-238 must be set at a maximum of 360 pCi/g with the flexibility of being lowered based on other operable unit decisions and volumes. The WAC will be an upper limit concentration acceptable into the cell and will not be used as an "average" limit.

   c.) No hazardous waste of any kind will be disposed of in this on-site waste cell.

3. DOE should continue to review and consider new technologies which may reduce the volume and toxicity of waste being disposed of on-site. They must remain open to new ideas which

could possibly result in a safer waste form for on-site.

4. During the implementation of the preferred alternative, the DOE must use excavation and waste management techniques which will prevent the dilution of waste concentrations to meet the WAC's.

5. DOE must do real-time monitoring for discharges to the environment. Data obtained from the real-time monitors and any other monitoring activities should be provided to the public in a timely manner.

6. DOE should make a consorted attempt to include pollution prevention whenever possible during the design and operation of the OU 2 remedial action system. All of these should be included in the design of the system.

7. DOE must ensure the public at large that their involvement will not be discontinued during the RD/RA. DOE must commit in the ROD for OU 2 to continuing the on-going public involvement program during the RD/RA.

8. DOE must maintain within the OU 2 ROD that the government will maintain permanent ownership of the property associated with the OU 2 ROD. DOE ownership of this property is essential to maintaining institutional controls and limiting land-use to ensure protectiveness of this site.

9. While I'm nervous about granting the DOE a USEPA waiver of the Ohio solid waste siting criteria, I would much rather see a on-site waste cell instead of seeing the waste capped in place. But, at the same time, I would like the restrictions described in comment #2 to be included with this waiver.

In summation, the following issues must be considered for the ROD of OU 2:

* no off-site waste for disposal on-site at Fernald (never and none at any time)

* DOE/Government must maintain future ownership of the Fernald site (the entire Fernald site)

* if we must have a disposal cell, it must have at least a 300 foot buffer zone (more if possible) and it must be placed on the best geology of the site

* the community/public must have a say and part in the disposal cell construction, with specifics

* the level of detail in the ROD should be very specific and inclusive with the public's comments, (meet WAC's, no off-site waste, meets arars, etc.)

* there should/will be real-time monitoring (day to day); waste in/out; emissions during construction, etc.

* the use of the WAC as an upper limit - 360 pc/g; no averages and this will be a maximum.

* there will be no dilution to meet the WAC's - can't mix to lower the levels (this is totally non-acceptable)

* USEPA waiver of siting criteria should only be granted if the specifics in comment #2 are followed and adhered to. The waiver must and will state specifically that no waste from nowhere will ever be brought into the Fernald FEMP EVER!

* With regard to a future waste cell - there will be annual reports and 5 year reviews -- copies of all reports, correspondence and annual reports will be sent to local government agencies and concerned citizens who request them.

* During the RD alara principals will and must be utilized.

* Institutional controls must and will be used with regard to the on-site waste cell -- fences, monitoring devices, etc.

* There must and will be public participation thru the RD/RA process.

* This will be DOE/government land with deed restrictions and full disclosure about the land.

If you have any questions, comments or concerns with regard to these comments, please feel free to contact me.

Sincerely,

Lisa Crawford

Lisa Crawford, Resident
[redacted]

Phone: [redacted]

LC:eac

cc: files

Comments on the Proposed Plan for OU 2 at the FEMP

Being a nearby resident, let me state up front that my preference would be for a total cleanup of the site that would return the site to background levels and leave no waste on site. However, since technological, political, and practical considerations must also come into play, I realize that this is probably not going to happen.

However, before the final ROD is decided upon I would like to see a more realistic evaluation of the costs of the proposed alternative. The costs of O & M were only figured for 30 years. This may be a standard way of estimating costs, but it does not accurately reflect the true costs of operating and monitoring a disposal cell at the FEMP versus disposing of the waste off-site. Because of the extremely long half-life of uranium the O & M costs will continue year after year indefinitely. However, if the waste were disposed of in an arid climate, the O & M costs would be considerably less and would also be just a portion of the costs of monitoring a facility in an arid climate which also accepts other wastes. Also, inevitably the cell will fail, and probably need repairs to prevent further contamination of the Great Miami Aquifer. Were these repair costs included in the cost estimates? For a true picture of costs you must look way beyond a 30 year time frame.

<u>If</u> a cell were built, and Congress cut the O & M funding out, what would be the worst case scenario for the cell, the community and the environment?

* * * * * * * * * *

The rest of my comments are aimed at bringing up concerns and suggestions relative to the Proposed Plan for OU 2. The ROD for OU 2 should clearly deal with or state the following:

* No off-site waste will be brought onto FEMP property for storage or disposal. (Define off-site waste as anything not currently on the site, except for samples that were sent off-site for characterization or treatability studies)

* The ROD should state that DOE will follow a sort of ALARA-principle in designing and executing the remediation. The remediation levels should be as close to background as possible given the technological, risk, and cost constraints. If an additional process or activity could get us substantially closer to background at a reasonable cost and risk, this should be pursued. The goal should be background levels, not just staying within a remediation level.

* <u>If</u> a disposal cell is built, it will be placed over the best geology on the site.

000201

* <u>If</u> a disposal cell is built, there should be constant oversight by an independent expert as the engineering, construction and filling are performed to insure that they

are done properly. Reports from the independent expert should be part of the public record.

* If a disposal cell is built, it should be built in such a way that the contents can be accessed for future remediation efforts if needed. This does not mean it must be in containers in neat rows, but be stored in a way that heavy machinery could get to it without lofting it in the air or increasing the risks to workers, community or the environment unnecessarily.

* The 5 year reviews of the ROD for effectiveness will include an analysis of the then current technologies' ability to pursue further remediation. If at a future time a technology would allow for a way to truly deactivate the radioactivity or hazardous chemicals or for a way to greatly enhance the long-term storage of the material, we would want to be able to evaluate if it was desirable to pursue further action. This process would also call attention to the technology research needs of the DOE.

* Copies of the annual reports and the 5 year reviews should be mailed to:

1. Ross, Crosby, and Morgan Townships
2. Butler and Hamilton Counties
3. OEPA, USEPA, ODH
4. Congressional and State Reps that have the FEMP in their district
5. Any resident, group or agency that wishes to be on the mailing list

* DOE will be responsible for requesting proper levels of funding for remediation and O & M (including future repairs). If Congress does not provide adequate funding, letters of inadequate funding should go out to those on the above mailing list. Defining "inadequate funding" should be worked out with the stakeholders. If at some time in the future another agency takes over the remediation and O & M functions of the site, it must accept the responsibilities in the RODs as well.

* DOE should commit to detailing the O & M process within its Administrative orders so that future DOE decision makers will be clear about the importance of this ongoing task.

* The RODs should be enforcable with fines and lawsuits if necessary.

* A mechanism for the stakeholders to initiate a request for future review and possible amendment of the ROD should be included in the ROD. Perhaps a petition with a certain number of signatures?

* If for some reason, the ROD for OU 2 can't be implemented fully, the ROD should be reopened with full public participation.

* There needs to be a commitment that all the RODs will be rolled up into one "big picture" ROD that will

incorporate any improvements in the wordings in the RODs that have evolved over time. For example, the ROD for OU 5 may have something in it that no one had thought of when they were writing earlier RODs. If appropriate, there should be a mechanism to incorporate it into all of the RODs.

* Air monitoring data during excavation, drying and transport will be extremely important to the community and workers. The best available devices and techniques should be used to give the workers and community a clear picture of air emissions. Action levels should be developed (with the community) so that work can be halted if they occur.

* Any waiver given so that a disposal cell can be built, must include wording to keep all off-site waste from entering the FEMP for storage or disposal. It must also be so site-specific that it does not create a precedent for future federal or commercial disposal sites in the vicinity of the FEMP.

* A commitment to continue the public involvement process that has been developed over the years should be stated clearly in the ROD. This should extend through design, remediation, and out into the O & M years.

In Section 5.1.1 of the Draft Proposed Plan for OU 2 (Aug. 24, 1994) there is a statement that as long as materials from the site have no radioactivity above the cleanup levels, they may be released from federal control. While the government may feel that this will be protective of human health and the environment, I feel that the public has the right to know whenever materials are above the background levels for their area. That way the public can decide for itself if it wants to be in contact with such materials. Also, it allows the public to have the information needed to determine if any additive or multiplicative risks need to be considered if such materials will be combined with other so-called "clean" materials.

Also, once cleanup is considered complete, all areas where the public will have access and that are above background (even if they are below the cleanup criteria) should be posted so that the public can make informed choices as to any exposures they might incur.

Submitted by Vicky Dastillung
12/30/94

December 29, 1994

Mr. Gary Stegner
Director, Public Information
U.S. DOE Fernald Office
P.O. Box 538705
Cincinnati, Ohio 45253-8705

RE: Comments on the Proposed Plan for Remediation of OU 2

Dear Mr. Stegner,

The purpose of this letter is to submit comments on OU 2's Proposed Plan. While it would be nice to think that everything on site will go away, this is not a reasonable assumption nor is it fair to the people in the western regions to be burdened with this entire problem. Nobody really wants this material/contaminates in their backyard, but I can accept the preferred alternative if the following issues are addressed and implemented in the OU 2 ROD.

1. Meaningful public involvement beyond the ROD and throughout the RD/RA process. DOE's commitment to this involvement is essential due to the implications of this alternative and must be included in the ROD.

2. Continued efforts in technology development should proceed in an attempt to discover more effective methods for treatment and disposal of the waste streams designated for the disposal cell. This also applies to the design of the cell itself.

3. The location of the disposal cell must have at a minimum a 300 foot buffer zone surrounding the entire cell and maximum geological support for additional protection of the aquifer.

4. The waste acceptance criteria (WAC) must be established at a maximum of 360 pCi/g with the option to be lowered depending on the decisions yet to be made regarding the entire site. The WAC is to be an upper limit maximum, no averaging or dilution of contaminants will be permitted in meeting the WAC.

5. Waste generated from outside the FEMP will <u>not</u> be allowed to be disposed of within the FEMP boundaries under any circumstances. This includes, but is not limited to hazardous, toxic, radioactive, and any and all waste/contaminates which were not a result of on-site activities.

6. Additional discharges of contaminates during the remediation of OU 2 should be avoided when possible. Methods to achieve minimal releases during remediation should be conducted throughout the RD/RA process.

7. Real time monitoring and other monitoring activities should be implemented during remediation and for the period for which the materials contained within the disposal cell pose a threat

and risk to human health and the environment. These monitoring activities should be conducted on a regular and frequent basis with the results provided to the public in a timely manner.

8. The DOE or how it may evolve in the future under another name and the federal government must retain ownership of the FEMP property. This is necessary to provide adequate institutional controls in maintaining the disposal cell and protecting the surrounding area. Full disclosure and restrictions of the property must be included in the deed to the land. This must be included in the OU 2 ROD.

9. ALARA principles must be utilized during the RD process.

10. A USEPA waiver of the Ohio solid waste siting criteria should only be granted if the DOE abides by the WAC upper limit stipulations has described in comment #4 above, the waiver specifically states that there will be no off-site waste disposed of on the FEMP property and no on-site waste will be capped and left in place.

Should you have any questions or comments please feel free to contact me.

Submitted by,

Pamela Dunn

Pamela Dunn
[redacted]

cc:file

FORMAL COMMENTS ON THE OU2 PROPOSED PLAN

I, Darryl Huff, am submitting these formal comments on the Operable Unit 2 Proposed Plan. I am a Morgan Township resident, a member of the Fernald Citizens Task Force, and chair of the Task Force's Waste Disposition Subcommittee. I submit these comments, however, as a concerned area resident and not as a representative of any of the aforementioned groups.

1. I do not think forcing area residents to accept a permanent disposal cell is fair. No one asked us whether we wanted DOE to come here in the first place; nobody even told us what was going on at the site for decades.

2. When all is said and done, DOE will have buried the waste, packed up, and moved out. Area residents will be left with no benefit from the site having been there. Only the waste will remain, and it will stay forever.

3. Area residents are not being unreasonable in asking DOE to ship the OU2 waste off site. There are 2 reasons for this-

   a) cost: The cost of the off site option is approximately $213 million; the cost of the disposal cell option is $110 million. If something should go wrong with the disposal cell, repairs might bring the cost of the disposal cell option much closer to that of the off site option.

   b) long term safety: Places like Utah and Nevada are much better suited for disposal of the waste because they aren't located over water sources and also receive

less rainfall.

4. I have doubts that large numbers of the public understand what a permanent disposal cell really means to the area.

5. Extensive opportunities for meaningful public ~~comment~~ involvement should be planned for after the signing of the ROD. The Community Relations Plan draft that was circulated in September does not give any concrete examples of what public involvement there will be after the ROD is signed. That is unacceptable. DOE officials must firmly commit themselves in writing before the ROD is signed to seeking public involvement at specific times during the RD/RA time frame and beyond after the ROD is made official.

6. If DOE does construct a disposal cell on site, absolutely no off site waste will be disposed of in the cell. I add this comment reluctantly, as I still do not believe the cell should exist. The land there should be left in the best condition possible. Area residents have already sacrificed enough for God and country.

7. The Waste Acceptance Criteria limit of 360 piC/g must be a maximum allowable figure for any waste that goes into the cell. It cannot be an average or a "soft" ceiling/limit.

8. DOE headquarters must issue a final ruling on the current ban on disposal of DOE waste at permitted commercial disposal facilities. DOE headquarters has had plenty of time to study the problem.

Thank you.

COMMENT SHEET

DOE is interested in your comments on the cleanup alternatives being considered in the *Proposed Plan for Remedial Actions at Operable Unit 2*, including the preferred alternative to excavate and dispose Operable Unit 2 material on-site with off-site disposal of the fraction that exceeds waste acceptance criteria. Please use the space provided below to write your comments, then fold, staple or tape, and mail this form. We must receive your comments on or before the close of the public comment period on November 25, 1994. If you have questions about the comment period, please contact Gary Stegner, the DOE Director of Public Information at Fernald, at (513) 648-3153.

1. ALT. #6, EXCAVATION OF ALL MATERIAL ABOVE CLEAN-UP LEVELS.
   a. CRU-2 CLEAN-UP LEVELS MUST BE CONSISTENT WITH OTHER OU'S IE, OU-1 IS 58 pCi/g. OU-2 LISTS 4 DIFFERENT LEVELS.

2. CLEAN-UP LEVELS AND WASTE ACCEPTANCE CRITERIAL FOR THE CELL SHOULD BE LISTED IN PPM TOTAL URANIUM AND BASED ON NORMAL ENRICHMENT IF THIS PLAN IS EVER TO BE IMPLEMENTED IN THE FIELD. IT IS VERY DIFFICULT TO DETERMINE U238 ACTIVITY WITH FIELD INSTRUMENTS. ALSO, SAYING AVERAGE U238 CONCENTRATIONS OF 360 pCi/g IS 1071 PPM IS JUST NOT CORRECT. PLEASE USE TOTAL URANIUM VALUES AND BE CONSISTENT WITH CONVERSION TABLES USED IN THE ANNUAL SITE ENV. REPORT.

3. SANITARY LANDFILL HISTORY OR PROCESS KNOWLEDGE IS WORTH INVESTIGATING. I DON'T BELIEVE THAT "WE DON'T KNOW WHAT WAS PLACED IN THERE". INFORMATION IS AVAILABLE.

Name: DICK KASPAREK

Address: [redacted]

City: [redacted] State/Zip: [redacted]

Phone: [redacted]

MAILING LIST ADDITIONS:

Please add my name to the Fernald Mailing List to receive additional information on the cleanup progress at the Fernald Environmental Management Project:

YES ✓ NO ___

COMMENT SHEET

DOE is interested in your comments on the cleanup alternatives being considered in the *Proposed Plan for Remedial Actions at Operable Unit 2*, including the preferred alternative to excavate and dispose Operable Unit 2 material on-site with off-site disposal of the fraction that exceeds waste acceptance criteria. Please use the space provided below to write your comments, then fold, staple or tape, and mail this form. We must receive your comments on or before the close of the public comment period on November 25, 1994. If you have questions about the comment period, please contact Gary Stegner, the DOE Director of Public Information at Fernald, at (513) 648-3153.

Alternative 3 appears to be the best plan for clean-up for the following reasons:

1. It eliminates the construction of a hazardous waste facility in heavily populated Hamilton County.
2. Removes the material from the area of the Great Miami Aquifer and heavily populated Hamilton County.
3. Would be cost effective over the long run by eliminating yearly monitoring cost, estimated at $1,000,000.00 per year, and the cost of repairs when the facility fails. (sooner or later it will "fail").
4. Would be moved to a site that is much less densely populated, is in a more arid climate, is already storing hazardous waste, and is already being monitored for possible leaks or failure, all of which are plusses.
5. Safer methods of hauling and transporting should be investigated such as encapsulation of material etc.

Name: DR. WILLIAM M. KUHLMANN

Address: [redacted]

City: [redacted] State/Zip: [redacted]

Phone: [redacted]

MAILING LIST ADDITIONS:

Please add my name to the Fernald Mailing List to receive additional information on the cleanup progress at the Fernald Environmental Management Project:

YES____ NO____

Comment K

H. DODGION
Administrator

Administration:
(702) 687-4670
Fax 687-5856

Air Quality
Mining Regulation and Reclamation
Water Quality Planning
Water Pollution Control

STATE OF NEVADA
BOB MILLER
Governor

PETER G. MORROS
Director

Fax (702) 885-0868
TDD 687-4678

Waste Management
Corrective Actions
Federal Facilities

DEPARTMENT OF CONSERVATION AND NATURAL RESOURCES

DIVISION OF ENVIRONMENTAL PROTECTION

Capitol Complex
333 W. Nye Lane
Carson City, Nevada 89710

January 10, 1995

Gary Stegner, Director
Public Information
Fernald Area Office
U.S. Department of Energy
P.O. Box 538705
Cincinnati, Ohio 45253-8705

RE: PROPOSED PLAN FOR REMEDIAL ACTIONS AT OPERABLE UNIT 2

The State of Nevada has reviewed the August 1994 documents related to the above referenced actions. We believe the Recommended and Preferred Alternative which proposes to excavate the radioactive contaminated materials and dispose of the greatest extent of these materials on site, should be the selected alternative.

As I am sure you are aware, the National Governors' Association (NGA) has been, for the past two years, facilitating discussions between the DOE and representatives from States hosting DOE facilities, which includes both Nevada and Ohio. Although the principal focus of these discussions has centered around the Federal Facilities Compliance Act LDR mixed waste treatment issue, the subsequent disposal of these and all DOE wastes has also been a significant concern. A Disposal subgroup, of which Nevada and Ohio were both members, was formed and reviewed pertinent information from all 49 DOE sites. Presently only 16 sites have been determined to warrant further evaluation as to their acceptability to support disposal activities. Fernald remains one of these sites.

It was the consensus and subsequent recommendation of the group that DOE must consider appropriate on-site treatment and disposal alternatives for all wastes generated at a site. The recommended alternative for Operable Unit 2, on-site disposal, which has been determined to be a viable option, is consistent with the recommendations of this group. Therefore, the final ROD needs to select the recommended alternative and be supported by the DOE,

Comment K (Continued)

EPA and state of Ohio. The selection of any other alternative would be inconsistent with the past two years of national consensus building.

Sincerely,

Paul Liebendorfer, P.E.
Chief
Bureau of Federal Facilities

PL/db

cc: Julie Butler, State Clearinghouse
John Walker, NWPO
John Thomasian, NGA

Tom Schneider
Fernald Project Manager
Ohio EPA
401 E. 5th St.
Dayton, OH 45402

Jim Saric
Remedial Project Manager
U.S. EPA
Region V - 5HRE - 8J
77 W. Jackson Blvd.
Chicago, IL 60604

Mike Savage
Assistant Chief
Hazardous Waste Division
Ohio EPA
P.O. Box 1049
Columbus, OH 43266

COMMENT SHEET

DOE is interested in your comments on the cleanup alternatives being considered in the *Proposed Plan for Remedial Actions at Operable Unit 2*, including the preferred alternative to excavate and dispose Operable Unit 2 material on-site with off-site disposal of the fraction that exceeds waste acceptance criteria. Please use the space provided below to write your comments, then fold, staple or tape, and mail this form. We must receive your comments on or before the close of the public comment period on November 25, 1994. If you have questions about the comment period, please contact Gary Stegner, the DOE Director of Public Information at Fernald, at (513) 648-3153.

Need Monitoring

No other DOE waste only Fernald

DOE to own land at Fernald site

Need Buffer zone at least 300 feet and should be monitored

Waste accepted criteria at least 36 C maximum. No diluted waste to make it stick to 36 C

All time real monitoring on digging & construction
Public participation throughout the site
WPA Warning - Make sure only DOE waste can be put over aquifer

Name: Betty C McKay
Address: [redacted]
City: [redacted] State/Zip: [redacted]
Phone: [redacted]

MAILING LIST ADDITIONS:

Please add my name to the Fernald Mailing List to receive additional information on the cleanup progress at the Fernald Environmental Management Project:

YES___ NO___

Comment M

Donald J. Meyer, Jr., Co., L.P.A. I-0966

Attorneys at Law
1005 Harrison Avenue
Harrison, Ohio 45030-1553

Donald J. Meyer, Jr.*
Barbara Ross Szucsik

Phone (513) 367-2141
Fax (513) 367-2145

*Also Licensed In Indiana

December 29, 1994

Mr. Gary Stegner
Fernald Area Office
P.O. Box 538705
Cincinnati, OH 45253

Re: Operable Unit 2 Proposed Plan

Dear Mr. Stegener:

This letter is to express my opposition to the Operable Unit 2 Proposed Plan to put a disposal cell on the Fernald site.

As you are aware, the proposal calls for the containment and location of radioactive materials with a radioactive life in excess of 20,000 years above an aquifer. While I understand the efforts that have been put into this project and the representation that the best available technological knowledge has been applied to the proposal, it is my concern that the proposal is fraught with environmental danger.

As you may be aware, I am one of the founders of the FRESH organization, and I served as one of the class counsel in the Fernald litigation. At the time the waste pits and the K-65 silos were initially put into operation in the 50's, it was represented that the best technology was applied to those containment facilities as well. However, over the years due to the failure of the federal government and the operators of the facility to properly monitor these material containment areas, contamination occurred to the soil, water, and air as a result of that negligence.

Despite the current conditions and the environmental concern from the DOE, there is no way that we can be assured for the years in the future that this disposal cell will be appropriately monitored or that it can effectively contain the radioactive materials which are being stored.

000313

Mr. Gary Stenger
Page Two
December 29, 1994

It would seem more appropriate to ship these materials to the disposal site in Utah where the environmental risk are very minimal and the operators are willing to receive the materials.

It is in the best interest, not only of the area residents, but also of the federal government to have the contaminants removed from the site since it will enable the site to be converted to a use which will be a monetary asset to both the federal government and to the community.

In the alternative, another site in Ohio should be found which does not present the same risk of the aquifer as the current site. While this may take some time, it must be remembered that we are looking far into the future when we make this decision.

It seems short sighted, therefore, to consider the construction of the disposal cell on the existing Fernald site.

Your consideration of these comments is appreciated.

Sincerely yours,

Donald J. Meyer, Jr.
Attorney at Law

DJM:mbb

Comment N

DEPARTMENT OF ENVIRONMENTAL QUALITY
OFFICE OF THE EXECUTIVE DIRECTOR

Michael O. Leavitt
Governor
Dianne R. Nielson, Ph.D.
Executive Director
Brent C. Bradford
Deputy Director

168 North 1950 West
P.O. Box 144810
Salt Lake City, Utah 84114-4810
(801) 536-4400 Voice
(801) 536-4401 Fax
(801) 536-4414 T.D.D.

January 20, 1995

Mr. Gary Stegner, Director
Public Information
Fernald Area Office
U.S. Department of Energy
P.O. Box 538705
Cincinnati, Ohio 45253-8705

Dear Mr. Stegner:

It is our understanding that Envirocare is being used for the disposal of some mixed, low-level radioactive waste and is under consideration for the disposal of additional low level radioactive waste from the Fernald facility in Ohio. We appreciate being kept aware of what is happening and in being given an opportunity to comment on the proposed remediation actions. It is important to keep all the potentially impacted stakeholders involved.

We understand that a balanced process had been applied to remediation of the Fernald site. This involves shipment of some wastes to Envirocare, stabilization of some wastes on-site, and shipment of some waste to DOE's Nevada Test Site from the different areas regarding remediation. We support the balanced process that you have applied to this remediation effort. Providing for onsite disposal of some of the wastes gives the public in Utah the perception that an objective, technical-based decision making process was used. The end result is that support for Envirocare receiving out of state waste will continue and not be undermined.

Please keep us on your mailing list for any proposals that involve shipment of wastes to Utah.

Best Regards,

Dianne R. Nielson

Dianne R. Nielson, Ph.D.
Executive Director

Printed on recycled paper

6793
Comment O

OhioEPA
State of Ohio Environmental Protection Agency

Southwest District Office
40 South Main Street
Dayton, Ohio 45402-2086
(513) 285-6357
FAX (513) 285-6404

George V. Voinovich
Governor

December 13, 1994

RE: DOE FEMP
HAMILTON COUNTY
OU2 PROPOSED PLAN -
PUBLIC COMMENTS

Mr. Gary Stegner
Director, Public Information
U.S. DOE Fernald Area Office
P.O. Box 538705
Cincinnati, OH 45253-8705

Dear Mr. Stegner:

The purpose of this letter is to provide Ohio EPA's official comments on the Operable Unit 2 Proposed Plan during the public comment period. Ohio EPA's comments are as follows:

1. The OU2 Proposed Plan is the culmination of efforts by U.S. DOE, Ohio EPA, and U.S. EPA to understand and develop a plan for mitigating releases to the environment from OU2. Ohio EPA believes the alternative selected in the Proposed Plan is protective of human health and the environment. Ohio EPA believes the preferred alternative is the appropriate one, when considered in the context of overall site cleanup. Ohio EPA supports the concept of a balanced approach where the low volume high concentration wastes go off-site for disposal and high volume lower concentration wastes are disposed of in an engineered facility on-site. We believe that this approach provides the most implementable and protective strategy for remediation of the FEMP site.

2. The Operable Unit 2 Record of Decision (ROD) should clearly place restrictions on the use of the engineered on-site disposal facility DOE. Ohio EPA understands the need to allow flexibility for incorporation of other operable units but also feels the following restrictions must be made in the ROD:
   a) No off-site waste may be disposed of in the proposed engineered disposal facility or any other facility on the FEMP site;
   b) The disposal facility Waste Acceptance Criteria (WAC) for Uranium-238 should be set at a maximum of 360 pCi/g with the flexibility to be lowered based upon other operable unit decisions and volumes. The WAC must be an upper limit of concentration acceptable into the disposal facility and may not be used as an average limit.;
   c) No characteristic hazardous waste should be disposed of in the facility.

Printed on recycled paper

3. DOE should commit to being open to consider new technologies which may reduce the volume, toxicity or mobility of wastes being disposed of on-site. Ohio EPA is simply requesting that DOE remain open to the idea of additional technologies which may result in a safer waste form for on-site disposal.

4. During implementation of the preferred alternative, DOE must use excavation and waste management techniques which will prevent the dilution of waste concentrations to meet the WACs.

5. DOE should commit to including and/or developing real-time monitoring for discharges to the environment resulting from remedial actions. DOE should attempt to incorporate any new developments in real-time monitoring from the DOE Office of Technology Development as well as the private sector. Data obtained from real-time monitors and any additional monitoring activities should be provided to the Ohio EPA and public in a timely manner.

6. DOE should attempt to incorporate pollution prevention activities whenever possible during the design and operation of the OU2 remedial action system. All available methods to reduce or eliminate discharges and releases from the excavation and disposal activities should be considered during the design of the system.

7. DOE must ensure the public that their involvement will not be diminished during Remedial Design and Remedial Action (RD/RA). DOE should commit within the Record of Decision for OU2 to maintaining the exceptional on-going public involvement program during RD/RA .

8. DOE should make commitments within the OU2 ROD concerning perpetual government ownership of properties associated with the OU2 ROD. DOE must provide commitments to ensure the land-use employed to develop the cleanup standards is maintained into the future. DOE ownership is essential to maintaining institutional controls and limiting land-use to ensure protectiveness of the site.

9. With regard to the request for a USEPA waiver of the Ohio solid waste siting criteria, Ohio EPA supports this waiver only in that it allows for a remedy more protective than capping in place. Since the DOE FEMP is a CERCLA site and its location would not allow issuance of an Ohio EPA exemption of the criteria, Ohio EPA believes a waiver is the appropriate mechanism to support the preferred alternative. Ohio EPA's support of the waiver is inherently tied to the restrictions described in comment #2 above.

If you have any questions concerning these comments please contact me at (513) 285-6466.

Sincerely,

Thomas A. Schneider
Fernald Project Manager
Office of Federal Facilities Oversight

cc: Jack Van Kley, Ohio AGO
Jim Saric, USEPA
Terry Hagen, FERMCO
Lisa August, Geotrans
Jean Michaels, PRC
Manger TPSS, OEPA/DERR
Jeff Hurdley, OEPA/Legal
Robert Owen, ODH

COMMENT SHEET

DOE is interested in your comments on the cleanup alternatives being considered in the *Proposed Plan for Remedial Actions at Operable Unit 2*, including the preferred alternative to excavate and dispose Operable Unit 2 material on-site with off-site disposal of the fraction that exceeds waste acceptance criteria. Please use the space provided below to write your comments, then fold, staple or tape, and mail this form. We must receive your comments on or before the close of the public comment period on November 25, 1994. If you have questions about the comment period, please contact Gary Stegner, the DOE Director of Public Information at Fernald, at (513) 648-3153.

I'm in favor of cleanup Alternative 3 Off-site Disposal.

Name: Joan K. Pottenger [redacted]

Address: [redacted]

City: [redacted] State/Zip:

Phone: [redacted]

Joan K. Pottenger

MAILING LIST ADDITIONS:

Please add my name to the Fernald Mailing List to receive additional information on the cleanup progress at the Fernald Environmental Management Project:

YES X NO ____

November 21, 1994

Mr. Gary Stegner, Director
Public Information
Fernald Area Office
U.S. Department of Energy
P. O. Box 538705
Cincinnati, Ohio 45253-8705

Dear Mr. Stegner:

We are just one of a number of Ross residence who are opposed to your decision to implement the Remedial Alternative 6 process or (Excavation and On-Site Disposal with Off-Site Disposal of Fraction Exceeding Waste Acceptance Criteria) for the removal of waste at Operable Unit 2 at the FEMP site.

When we moved into the Ross area five years ago, we were told that they had every intention of removing all waste material from the site. Knowing that they had intended to clean up this area, was a main concern for our decision to move into the Ross area. If we would have known then what we know now, we would not be living in Ross today.

We are totally opposed to the Alternative 6 decision and are only concerned with **removing all waste material from the FEMP site.**

Sincerely,

Tom & Carolyn Rasche

H. Thomas Rasche & Carolyn A. Rasche

[redacted]

/car

000320

1/20/94

GARY STEGNER

ON: LARRY STEBBINS

AS A RESIDENT IN THE ROSS AREA, I WOULD LIKE TO MAKE THE FOLLOWING COMMENTS ON THE FEMP OU2 PROPOSED PLAN.

1) IF THE FEMP IS TO STORE WASTES IN AN ENGINEERED DISPOSAL CELL FROM OU2 OR ANY OTHER OU; I WOULD LIKE IT TO BE GUARANTEED WITH SPECIFIC LANGUAGE IN THE ROD, THAT THE DOE, EPA, AND OEPA SHALL NEVER SEEK TO STORE WASTE FROM ANY OTHER SITE AT THE FEMP.

2) THAT DURING REMEDIATION, DUST ABATEMENT BE A PRIORITY, TO REDUCE AIR EMISSIONS.

3) THAT CONSIDERATION BE GIVEN TO PLANTING FAST GROWING TREES ON THE PERIMETER OF THE EXCAVATION AREAS TO ACT AS NATURAL SCREEN TO REDUCE AIR EMISSIONS.

000321

MR. WILLSEY: Sorry, one more thing, Don and I have to leave because we have a levy on and we're going to get up to the Board of Elections, we're supposed to be up there. Thank you very much.

MR. WARNER: We appreciate your participation. Richard Strimple.

MR. STRIMPLE: I'm going to just make a little statement on water aquifers. If it is polluted, it's already polluted.

MR. WARNER: You are Richard Strimple?

MR. STRIMPLE: Yes, I'm sorry. It's polluted forever and there's no going to be a permanent digging it up and hauling it out. You will dilute it, you will cut your options, but for somebody to think that they're going to clean it up, it's spitting into the wind, period.

MR. WARNER: Thank you, Richard. Russ Beckner.

MR. BECKNER: My name is Russ Beckner, I'm a resident of Ross Township and live 1,500 feet from the site.

I would just like to go on record

1 MR. STORER: I'm Gary Storer, I'm
2 Crosby Township Trustee and also a resident within
3 one mile of the plant.
4 I wanted to make a point versus
5 alternative, versus Alternative 6. I favor
6 Alternative 3 based on the fact the initial cost,
7 212 million, will be exceeded by the initial cost
8 of Alternative 6, which is 110 million, in the fact
9 that the required monitoring over a number of years
10 in the future will far exceed Alternative 3. So
11 basically I don't see putting that burden on, I
12 don't see putting that burden on future
13 generations, however many years it would be down
14 the road, maybe a hundred years or more. I don't
15 feel it's fair to put that burden of monitoring,
16 which is going to far exceed Alternative 3. So I
17 oppose Alternative 6 and I prefer Alternative 3.
18 Thanks.
19 MR. WARNER: Thank you. Any other
20 comments?
21 We've got two to read into the record
22 here. I'm not sure I pronounce this last name,
23 Judy Suzurikawa. The Cincinnati Water Works
24 received notification of the public hearing and

COMMENT SHEET

DOE is interested in your comments on the cleanup alternatives being considered in the *Proposed Plan for Remedial Actions at Operable Unit 2*, including the preferred alternative to excavate and dispose Operable Unit 2 material on-site with off-site disposal of the fraction that exceeds waste acceptance criteria. Please use the space provided below to write your comments, then fold, staple or tape, and mail this form. We must receive your comments on or before the close of the public comment period on November 25, 1994. If you have questions about the comment period, please contact Gary Stegner, the DOE Director of Public Information at Fernald, at (513) 648-3153.

THE COST OF FUTURE MONITORING WILL FAR EXCEED THE COST OF ATERNATIVE 3.

HAVE YOU CONSIDERED THIS FACT?

WHAT WILL HAPPEN IF FUTURE GENERATIONS DECIDE NOT TO FUND MONITORING?

Name: GARY STORER

Address: [redacted]

City: [redacted] State/Zip: [redacted]

Phone: [redacted]

MAILING LIST ADDITIONS:

Please add my name to the Fernald Mailing List to receive additional information on the cleanup progress at the Fernald Environmental Management Project:

YES____ NO____

Formal Comment Card

Please write your formal comment(s) below for submittal during this meeting:

OFF-SITE DISPOSAL IS THE ONLY ACCEPTABLE ALTERNATIVE DUE to THE MAJOR GROWTH WHICH WILL TAKE PLACE IN WESTERN HAMILTION COUNTY.

GARY STORER CROSBY TRUSTEE

000325

6793

Comment U

Formal Comment Card

Please write your formal comment(s) below for submittal during this meeting:

The Cincinnati Water Works received notification of the public hearing and comment period on Nov. 7. We have not had sufficient time to review the options and their impact on water quality of the sole-source aquifer which supplies many residents of Butler County and Northern Hamilton County. Also, wells in the area of the Fernco project ~~sub~~ provide water to major industries in the Greater Cincinnati area (Fortune 500 companies) which provide employment which contributes to the economic health of the region.

Judy Suzurikawa
Chemist Cinti Water Works

000326

Comment V

Donald H. Thiem
[redacted]

Mr. Gary Stegner, Director
Public Information
Fernald Area Office

December 14, 1994

Mr. Gary Stegner,

Please consider:
Before DOE our land was free of contamination. Because of DOE, our land is polluted and the problem has grown to immense proportions.

Years and years of abuse, with no thought to the environment or the citizens, have compounded this problem. Over the last ten years we heard yes, we made mistakes, however, we have learned a lesson, never again. This has been the DOE refrain.

Now, we hear save money and lift this burden from DOE's back. A 91.83 acre landfill is being considered. Have we learned nothing?

My feelings are, if it must be stored in pits with liners of clay and polyurethane and capped by the same procedure, then it is too contaminated for on site storage.

Donald H. Thiem

Donald H. Thiem

Comment W

EVALUATION FORM
U.S. DEPARTMENT OF ENERGY
OPERABLE UNIT 2 PUBLIC MEETING
NOVEMBER 8, 1994

Thank you for attending tonight's meeting. We would like your opinion on the information presented this evening. Please take a few minutes to answer the following questions and turn in this form before you leave.

1. Please indicate your affiliation (check more than one, if applicable)
   - ✓ Fernald area resident
   - ✓ FERMCO employee
   - ___ DOE employee
   - ___ Subcontractor employee
   - ✓ FRESH member
   - ✓ Task Force member
   - ___ Representative of a regulatory agency
   - ___ Representative of another group/organization
   - ✓ Other FATLC - Council (please specify)

2. Was the format of the meeting
   - ___ Very satisfactory
   - ✓ Satisfactory
   - ___ Not very satisfactory
   - ___ Not at all satisfactory

3. How helpful would you rate the information that was provided during the presentations?
   - ___ Very helpful
   - ✓ Helpful
   - ___ Not very helpful
   - ___ Not at all helpful

4. Were the presentations
   - ___ Too long
   - ___ Too short
   - ✓ Adequate

5. Was the time allotted for the Q&A session
   - ___ Too long
   - ___ Too short
   - ✓ Adequate

6. During the Q&A session, were the answers to your questions

___ Very satisfactory
✓ Satisfactory
___ Not very satisfactory
___ Not at all satisfactory

Comment W (Continued)

7. How comfortable did you feel providing formal comments during the formal comment session?

___ Very comfortable
___ Comfortable
___ Not very comfortable
___ Not at all comfortable
✓ Did not provide a comment

8. Did you understand the purpose for separating the question and answer session from the formal comment session?

✓ Yes
___ No

9. Overall, do you feel this meeting was

___ Very valuable
✓ Valuable
___ Not very valuable
___ Not at all valuable

10. Overall, do you have any additional comments you would like to add about the meeting, or suggestions for improvement?

1.) off-site has maintanence + monitor also over-all govn'tmt cost still out of tax payer pocket should have been put in perspective
2.) The issue of bad stuff gone, some stuff keep is basically a political compromise that is the only alternative that is currently being considered nationally.

Thank you for taking the time to fill out this evaluation form.

000010

These things need to be brought into perspective in order for people to understand why the direction of things are what they are. — It's not like any body really wants the stuff but the reality of shipping all is not in the pic and shipping some (the real bad stuff) and keep some in the ~~[illegible]~~ way the nation is leaning — COMPROMISE

This needs more explanation to public

000329

1 holes are only so big.

2 UNIDENTIFIED SPEAKER: Jim, your

3 alternative number 3, you keep mentioning that this

4 material is sited to go to Envirocare in Utah. Did

5 you look at the cost of sending it to Nevada Test

6 Site since we're talking about splitting out the

7 low level radioactive components?

8 MR. WILLIAMS: Yes, we did, and the

9 reason why we used Envirocare was it was much more

10 cost effective than the Nevada Test Site primarily

11 due to the transportation and packaging

12 requirements.

13 UNIDENTIFIED SPEAKER: My second

14 question would be, you're given a whack for U-238

15 concentrations, are there going to be other whacks

16 as well as for other uranium isotopes as well as

17 thorium and some of the other materials?

18 MR. WILLIAMS: Not for Operable Unit

19 2. Uranium is the only contaminant of concern for

20 groundwater within Operable Unit 2.

21 MR. BECKNER: Earlier you used the

22 term design life of 500 years. Since you could not

23 have possibly tested any of these things for

24 anywhere near that period, I'd like to know how you

Comment Y

NEVADA TEST SITE
COMMUNITY ADVISORY BOARD

December 30, 1994

U.S. Department of Energy
Fernald Area Office
P.O. Box 538705
Cincinnati, OH 45353-8705
Att: Mr. Gary Stagner, Director
Public Information

Subject: **FERNALD, OHIO, REMEDIAL INVESTIGATION/FEASIBILITY (RI/FS) FOR OPERABLE UNIT 2**

Dear Mr. Stagner:

The Nevada Test Site (NTS) Community Advisory Board (CAB) appreciates the opportunity to comment on the RI/FS for **Operable Unit 2** at the Fernald, Ohio, Department of Energy (DOE) site. As you're probably aware, the CAB is extremely interested in all facets of the remediation work taking place at Fernald. Since the NTS has taken receipt of many Fernald waste shipments in the past, and may be the recipient of others in the future we obviously have a stake in decisions being considered at Fernald. The Board has previously commented on the recommendations being considered for **Operable Unit 4** at Fernald.

Operable Unit 2, as we understand it, is located over a sole-source aquifer which serves as a water supply for a number of communities in southwestern Ohio. The recommendations for remediation of **Operable Unit 2**, as they have been conveyed to the CAB, are to excavate flyash materials, solid waste and soil contaminated with relatively benign waste from this unit, and redispose the waste in engineered "cells" elsewhere on the Fernald property. Extremely hazardous wastes from the Unit would be excavated and transported to the **Envirocare** facility in Utah for final destruction.

The NTS CAB is supportive of this recommendation. Protecting the local aquifer by removing the waste to a safer, controlled site at Fernald appears needed to protect this important water supply source. Relocating the waste onsite would also eliminate the more expensive, and potentially more dangerous option of transporting large amounts of waste potentially thousands of miles. Since the waste appears to be, for the most part, not hazardous an onsite solution seems feasible.

Fernald cleanup funds can then be better employed for resolving the facility's more serious problems. Given the level of funding cuts being proposed for DOE's Environmental Management program in FY 95 (and probably into the future), it is imperative that the potentially limited cleanup funds be employed to their maximum utility.

000331

We applaud the efforts at Fernald and other sites to consider, where feasible, on-site remediation options. Given the significant amounts of waste present at Fernald and other locations throughout the nation, it is important that possible health and safety risks to the public be minimized. Reducing the numbers and volumes of waste transported is important in ameliorating some of these risks.

Nevada and Ohio, as you're well aware, were significant participants in developing the United State's nuclear deterrant option. The apparent success of this endeavor offers the potential for a safer and more peaceful world. Since many states and communities shared in the development of the nuclear deterrent, NTS CAB members feel that it is also important that all participate in the solution to the onerous waste problems that most DOE sites are experiencing. The on-site solutions being proposed at Fernald are important indicators that the will and technology exist to address many of these problems at their source in an equitable manner . All sites must bear the burden of sharing in the resolution of these problems to ensure that they are not simply passed on to other locations.

In closing one final comment is in order. The NTS CAB is an important stakeholder with respect to remediation decisions being made at the Fernald, Ohio site. Despite the significance of these issues to Southern Nevada, we have been given insufficient time to consider and comment on the many issues associated with the Fernald site. **Operable Units 2 and 4** are important examples. The CAB and Southern Nevada citizens need more advance notification to comprehensively comment on issues such as these that could adversely affect our communities. *The NTS CAB and our communities should be afforded the same time frame as Ohio residents to consider these issues when future operable units are remediated.*

Once again we are supportive of the onsite recommendations provided for **Operable Unit 2**. The CAB looks forward to your incorporation of the Board's comments into remediation decisions at **Operable Unit 2** at the Fernald facility.

If you have questions or require clarification please contact me.

Sincerely,

William L. Vasconi, Chairman
Nevada Test Site, Community Advisory Board
27doefnld.db

[redacted]

Comment Z

November 21, 1994

Mr. Ken Morgan
Director, Public Information
U.S. Department of Energy Field Office
P. O. Box 398705
Cincinnati, Ohio 45239-8705

SUBJECT: PUBLIC COMMENTS ON PROPOSED REMEDIATION PLAN OF FEMP OPERABLE UNIT #2 LOW-LEVEL RADIOACTIVE WASTE (DUE NOVEMBER 25, 1994)

Dear Mr. Morgan:

The Fernald Site is grossly inappropriate as a permanent storage site for any low level radioactive waste because of the following considerations:

1. Area geology and seismic activity.
2. Area demographics - increasing population density; 19 miles to Cincinnati.
3. Levels of precipitation and tornado-prone area.
4. Low depth to ground water - sand and gravel bottomland.
5. Site over Great Miami Aquifer currently the source of potable water for hundreds of thousands of people in Southwestern Ohio and future usage will be for millions of people.
6. People live in houses less than 100 ft. from the FEMP boundary.
7. The proposed FEMP nature preserve is no place for any kind of hazardous radioactive waste. What radiation does not kill, it mutates.
8. There is no minimum two-mile "safety" buffer zone between the proposed storage site and the FEMP boundary.
9. There is no permanent "fail-safe" radioactive waste containment facility under the above conditions.
10. There is no safe threshold for human exposure to cancer-causing ionizing radiation. There is danger of exposure to low levels of radiation.
11. No one likes radioactive waste in their backyard so why should we continue to be victimized under a "cloud" of cancer producing radioactivity for another 40 years and on into the future to hurt countless more generations!
12. Evaluation of rail transportation risks should be made for safest route to an existing or new isolated waste facility where the radioactive waste will not directly or potentially cause harm to any person for the foreseeable future and corrective action taken where needed to maximize assured success.

Your help to remove all radioactive waste from FEMP will be appreciated.

Sincerely,

J. E. Walther

J. E. Walther

cc: The Honorable John H. Glenn

6793
Comment AA

December 2d, 1994

Dear Mr. Stegner,

As per our previous conversation, I would like to request an extension of the open comment period until January 30, 1995. Due to the holiday season some of our lawmakers need this extension to make their thoughts and comments known. Thank you for your indulgence

Respectfully yours,

Tom Willey

President, Ross Twp
Board of Trustees

OH #2

after we've called everybody's name and they've made their comments, we will open the floor for any additional comments, and after that we'll read a couple of comments that we've received that were written on the cards. Again I would like to emphasize that responses will not be presented this evening to your comments. You will find them in the responsiveness summary document that will be submitted with the draft Record of Decision in January of this year.

If there's no questions, I would like you to come up to the microphone, clearly state your name, and then present your comment. Our first commenter will be Tom Willsey.

MR. WILLSEY: My name is Tom Willsey, and I'm a township trustee from Ross Township.

A lot of you people have not seen us -- Don King is also here, he's a township trustee. We have not been to a lot of these meetings because at this point we have never really been in an adversarial position with you folks, but I think now we are. I've been a trustee, I'm in my ninth year, so this didn't just happen to me last

1 night. We've known about the problems and all the
2 things that went on in that plant for some time,
3 and for ten years now we pretty much believed that
4 they were going to clean up, they were going to
5 move it off site, and we believed that because
6 that's pretty much what you told us. Now I'm
7 seeing where it's permanent, lifelong. I don't
8 think you plan on moving it. Our people in Ross
9 Township, they have a permanent stake in this, and
10 permanent to them is lifelong because they will be
11 there all their lives. So we feel that the meaning
12 of permanent means something different to us than
13 it does to you. We have been dumped on, we've had,
14 of course, the uranium blow on us. We put up with
15 it for a long time, and like I said, we have been
16 very cooperative to this point.
17 We've watched different things happen
18 in our area that we're not real happy with, our
19 property values obviously went down, that's a
20 matter of record, I'm not making that up, but we
21 tell people, hey, it's a good area, they're
22 cleaning it up, look at all the things they're
23 doing. Well, you're not doing that. We've had it
24 for four years.

1 I look at all your charts and your
2 graphs and I see the Alternative 3, I see
3 Alternative 6, 1, 2, I don't know how many there
4 were, but the thing that glares out and hits me on
5 the nose on Alternative 3 and Alternative 6 is 212
6 million versus 110 million. Cost, money. Quite
7 frankly, if you've ever been to Washington, DC,
8 cost has never been a factor to the federal
9 government. They're a monument to what you can do
10 with unlimited funds. On every street corner
11 there's a monument to something or somebody. So
12 cost should not be a factor. This cost to me is
13 not a factor. The well-being off our residents and
14 our township is a factor to me.
15 We will go on record as being opposed
16 to this, and quite frankly, we're going to try to
17 get a ground swell of people to be opposed to it
18 also. I didn't want to be adversarial about this
19 and I'm still not. I just want it moved. I don't
20 care what it costs. I'm paying for it anyway. I
21 would rather pay for it out of my pocket than pay
22 for it with the lives of my family. Thank you.
23 MR. WARNER: Thank you, Tom, we
24 appreciate your comment.

6793
Comment BB

Edwa Yocum [redacted]

November 14, 1994

Gary Stegner
DOE. Director of Public Information
P.O. Box 538705
Cincinnati, Ohio 45253-8705

Reference: Comment on OU2 alternatives.

- Public particpation including a comment period during Remedial and RODS of OU2.

- As a resident of Crosby Township I preferr the alternative three " Off -Site Disposal.
- As a concerned citizen of the United States I will accept OU2 alternative six (6) " On - Site disposal with Off Site disposal of hazardous waste exceeding the waste acceptance criteria. (WAC - 360pCi/g).
  - All of the FEMP (Fernald) site to be owned by the Department of Energy. (Not only the disposal cell area).
  - The disposal cell area will have the protection of a buffer zone. No less than 300 ft around.
  - Review of maintance around cell yearly.
- No other DOE or commerical low level waste for disposal be allowed in to the Fernald disposal cell.
- No dilution of waste to meet waste acceptance criteria.
- WAC 360 pCi/g of U-238 be maxium going into the cell.
- Real time monitoring day to day during excuvation and construction.
- Stated in the Record of Decision (ROD) that DOE will obey all regulation.
  - Meet ARAR protection of the Aquifer.
  - WAC no dilution of waste.
  - No off site waste from other DOE sites.

000338

Comment CC

December 21, 1994

Dear Mr. Stagner:

I am writing to protest the possibility of having any contaminated soil or building material left in or on-site in any type of containment device or sub-unit.

We, in Ross, have had enough from the government's over-sights, under-sights, lack of control, too much control and non-caring attitude toward us and the environment. My family and I have made Ross our home and we are tired of the D.O.D., D.O.E. and the E.P.A.'s lack of concern for us, our health and well being. It states in the Constitution that we are guaranteed the right and pursuit of happiness but we find that hard to believe when the government turns the D.O.D., D.O.E. and E.P.A. loose on the quality of life and drinking water supply. The E.P.A. makes more noise over a single housing unit than that of the contamination of the ground water under Fernald.

Stop spending millions on studies of what to do and do what should be done -- GET RID OF IT!!! Take it back to Nevada.

Sincerely,

David M. Young
Ross Township Trustee

ATTACHMENT II

PUBLIC MEETING TRANSCRIPT

U.S. DEPARTMENT OF ENERGY

PUBLIC MEETING FOR OPERABLE UNIT 2

PROPOSED PLAN

NOVEMBER 8, 1994

THE PLANTATIONS

- - -

1 MR. WARNER: Good evening, welcome
2 to the public meeting on the Operable Unit 2
3 Proposed Plan for the remediation of this unit at
4 the Fernald facility. My name is Rod Warner. I'm
5 the DOE program manager charged with the
6 remediation of that unit at Fernald.
7 We realize that November is a real
8 busy month for those of you who are involved in the
9 public participation activities here, and coupled
10 with that there's some holidays and such that it's
11 a little difficult for us to try to pick the most
12 appropriate evening to have this meeting. We
13 wanted to do it as early into the public comment
14 period as we could, and with that period ending
15 basically the day after Thanksgiving, we opted for
16 this date. We appreciate your coming out on this
17 busy election day and taking the time to
18 participate in this meeting, and we apologize for
19 any inconvenience we may have caused you with this
20 date.
21 I think to start the meeting off I
22 would like to go over some ground rules and the
23 agenda that maybe will help the meeting flow a
24 little bit better and get us all out of here at a

1 decent hour. Hopefully you all remembered to
2 register at the back, and if you didn't, you can do
3 so at the break which will follow this session of
4 the meeting. When you register, if you would
5 please indicate if you would like to make a formal
6 comment during the formal part of this meeting.
7 That will just help that part of the session go a
8 little better.
9 On your chairs you should have found
10 some handouts. I believe there is an evaluation
11 form we would like to have you fill out before you
12 leave the meeting tonight, and also there was a
13 comment card. Now if you would like to submit a
14 comment during the formal session and you choose
15 not to make it verbally, please write it down on
16 the comment card and give it to one of the
17 individuals at the front desk, and we will read
18 that into the record during the formal part of this
19 session.
20 Since this is a formal meeting, we do
21 have a court transcriber here, and all of the
22 comments that we make here tonight will be
23 transcribed basically as accurately as they're
24 said, and we will have a full transcript of this

1 meeting available in about two weeks, and this
2 transcript will be placed in the Public Information
3 Center, which is located about a half a mile or so
4 south of the plant on Route 128.
5 Tonight's meeting is going to be
6 divided into two sessions. During the first
7 session we will give you an overview of all the
8 remedial investigation, a review of alternatives,
9 and also our proposed plan for the remediation of
10 this Operable Unit. This will be followed by a
11 question and answer period, an informal session.
12 Feel free to ask questions as they specifically
13 apply to Operable Unit 2.
14 After that then we'll have a short
15 break and we'll go into the formal session. We
16 encourage you during this particular question and
17 answer period to ask any questions that you have,
18 but we ask that you specifically limit them to the
19 Operable Unit 2 proposed plan. Anything that we
20 present tonight material wise is fair game for you
21 to question. We will try to answer them as best we
22 can, and this is a real opportunity for you to get
23 that informal response.
24 At the break then I think it would be

1 a good idea if you would try to interface with some
2 of the participants. That way you can get some
3 real face-to-face interaction with them and maybe
4 get an increased comfort level of our approaches.
5 We would ask you to remember that we cannot
6 presuppose the remedial activities that some of the
7 other operable units will be taking, but we have
8 tried to integrate our plan with them as a
9 contingency, so please, if you will focus your
10 concerns on specifically Operable Unit 2 this
11 evening.
12 Following a short break, then we will
13 proceed into the formal session of the meeting.
14 Those of you who signed up on the register
15 indicating that you wanted to make a verbal comment
16 will be called up in order to make your comment and
17 have it placed into the public record. After we
18 receive everyone's verbal comments, we'll open the
19 floor again -- everybody who has requested verbal
20 comments, we'll open the floor again for any
21 additional commenters, and then after that we will
22 read into the record any written comments that we
23 receive during the meeting. This part of the
24 meeting will not be interactive, and by that I mean

1 when you make a comment, it will not be responded
2 to this evening. Your responses will be presented
3 in the responsive summary document which will be
4 submitted with the draft Record of Decision on
5 January 5th, 1995. So you will locate your
6 responses to your formal comments there.
7 Remember that to get a response to
8 your comment in that document you must either make
9 a verbal comment this evening, submit a written
10 card to be read into the record this evening, or
11 submit a written comment sometime before the end of
12 November 26th to DOE, which is the end of the
13 public comment period. And I will put a slide up
14 here that shows you that address. We'll go back
15 over this formal session again before we start it
16 up.
17 So with that, I would like to
18 introduce Jim Williams, FERMCO Director for
19 Operable Unit 2. Jim is going to give you that
20 overview of Operable Unit 2 and our proposed plan,
21 and we hope that you agree with us that our
22 proposed plan does represent the best balance of
23 protectiveness, cost, and implementability. Jim.
24 MR. WILLIAMS: Thank you, Rod. And

1 good evening everyone.
2 First thing I'd like to do this
3 evening is briefly review where we are and where
4 we're going in the public participation process for
5 Operable Unit 2.
6 On May 10th of this year we held a
7 workshop to go over Remedial Investigation for
8 OU-2, and at that time we presented our initial
9 thoughts on a likely preferred remedial alternative
10 for OU-2.
11 On June 28th of this year we held a
12 public workshop for the Feasibility Study for
13 OU-2. Again we went over our thinking with regard
14 to a proposed plan for Operable Unit 2.
15 On September 13th OEPA had an
16 availability session to discuss the possibility of
17 siting an on-site low level waste facility at
18 Fernald.
19 On October 25th we had a workshop to
20 discuss the proposed design and location of the
21 disposal facility.
22 On November 3rd there was an
23 availability session sponsored by OEPA to discuss
24 the OU-2 proposed plan and preferred remedial

1 alternative.

2 Tonight is the public meeting on the
3 proposed plan for OU-2. And there are a couple of
4 things that I'd like for you to think about with
5 regard to public participation for OU-2. First is
6 that we've listened to your concerns and your ideas
7 through the process. Many of you who have been
8 involved since May realize that we modified our
9 approach substantially, significantly, in part due
10 to comments and questions and concerns by the
11 public and by the regulatory agencies.

12 Secondly, although this is the public
13 meeting for the proposed plan for OU-2, it's not
14 the end of the process. The public comment period
15 will extend until the 25th of this month, and even
16 following the close of the comment period, the
17 public participation process will continue into the
18 remedial design. FERMCO, the Department of Energy,
19 and the regulatory agencies are committed to
20 continued public involvement into the remedial
21 design process.

22 So the two things we'd like you to
23 take away are that we are listening to you; equally
24 importantly, we're responding, we're modifying our

1 proposed actions based on the input we receive, and
2 your opportunity to participate will continue.
3 Would it be possible to dim the
4 lights just a little bit?
5 Next thing I'd like to do is just
6 very briefly review the contamination, the hazards
7 at Operable Unit 2, and review the need for a
8 remedy for remedial action at Operable Unit 2.
9 This is a three-dimensional picture of
10 contamination at the solid waste landfill. The
11 image in the reddish color is uranium contamination
12 in the landfill. The more magenta color is a lower
13 level contamination in the landfill. It's about an
14 acre in size, and most of the volume within the
15 landfill is contaminated with uranium.
16 Contamination has not impacted the Great Miami
17 aquifer.
18 The next waste unit in Operable Unit
19 2 are the lime sludge ponds. Again the color
20 coding of the images is the same, where the
21 purplish or magenta color represents low level
22 uranium contamination at the lime sludge ponds.
23 It's scattered around in the dikes or the berms
24 that are made of earth and they contain the lime

1 sludge. Again, the contamination at the lime
2 sludge ponds has not affected the Great Miami
3 aquifer.
4 This is a picture of contamination at
5 the three contiguous southern waste units, and
6 these are the inactive flyash pile, the South
7 Field, and the active flyash pile. The reddish
8 blob to the left center where John is indicating
9 with the pointer is uranium contamination at the
10 inactive flyash pile. To the east, directly to the
11 east is another blob or volume of uranium
12 contamination in the South Field. The big
13 difference with these waste units is that the
14 contamination in OU-2 has in this area
15 significantly impacted the Great Miami aquifer, and
16 you're looking down the bird's-eye view on the
17 groundwater, and it's color coded to represent
18 uranium contamination in the Great Miami aquifer.
19 The most significant contamination in
20 the aquifer is directly below the inactive flyash
21 pile. I trust John is indicating that. The
22 contamination is approximately 1,000 parts per
23 billion in this area. And without remediation in
24 Operable Unit 2, there are numerous problems that

1 represent unacceptable risks to human health in the
2 environment. And we'll go over those in a little
3 more detail, but primarily they would involve risks
4 to users of the groundwater. As you can see, it's
5 contaminated. In the absence of remediation, it
6 will become more so and the contamination will
7 spread. In addition, there is potential exposure
8 through surface pathways on the ground through
9 direct radiation, inhalation of suspended dusts,
10 dermal exposure, and ingestion.
11 Before we can get into the proposed
12 remedy for Operable Unit 2, we need a definition,
13 and that definition is for federal ownership,
14 federal land use at Fernald. We need this
15 definition because the proposed remedy for Operable
16 Unit 2 will require continued federal ownership of
17 at least a portion of the Fernald site into the
18 future. So what we're talking about, and the
19 functional definition for our purposes of federal
20 land use are when the federal government retains
21 ownership of the FEMP, land use and site access are
22 restricted for authorized government purposes
23 only. The receptors, in other words, the
24 individuals who could receive risk in the future

1 under this scenario are trespassers who come onto
2 the property, off-property farmers who are primary
3 water users, and users of the Great Miami River
4 water. These are the people that have to be
5 protected in the remedy for Operable Unit 2.
6 And these are the specific pathways
7 through which these individuals can be exposed to
8 risks from Operable Unit 2. For the trespasser,
9 there's direct radiation, inhalation, again that
10 would be primarily of dust from the surface,
11 ingestion of dust or surface water, and dermal or
12 exposure to the skin from contaminated material.
13 For the off-property farmer, the
14 primary pathway, the most significant risk would be
15 ingestion primarily of groundwater.
16 Those pathways I just described are
17 what have to be controlled by any successful remedy
18 at Operable Unit 2. In the course of developing
19 and evaluating potential remedies for Operable Unit
20 2, we looked at, by my last count, 28 different
21 remedial alternatives. Some of these were specific
22 to a specific subunit, but the point is we
23 thoroughly exhausted our imaginations in terms of
24 developing and comparing reasonable and feasible

1 alternatives for the remediation of Operable Unit
2 2. After the process of studying and screening out
3 the less feasible alternatives, when the smoke had
4 cleared, we were left with four, one of which is
5 required by CERCLA or Superfund guidance, and
6 that's the no action alternative.
7 The other three alternatives that
8 were given a very detailed comparative analysis are
9 consolidation and containment, which many of you
10 will remember was the alternative in which we
11 consolidated the waste within the OU-2 waste units
12 where it presently is, basically moved it around
13 within the waste unit to the safest place, and then
14 contained it with a cap within the waste unit.
15 The next alternative is excavation
16 and off-site disposal. That's pretty clear. The
17 waste above cleanup levels within each Operable
18 Unit 2 waste unit would be excavated and shipped
19 off-site for disposal. The disposal facility that
20 we evaluated in this feasibility study was the
21 Envirocare facility in Utah.
22 The final alternative that was given
23 detailed comparative analysis was excavation and
24 on-site disposal with off-site disposal for the

1 fraction exceeding the waste acceptance criteria,
2 which would be the limits of contamination which
3 would be accepted at the on-site disposal
4 facility.
5 What I want to spend most of the time
6 on, and I think what is most important for us to
7 understand, is how do these alternatives compare
8 and why did we select one for recommendation to you
9 over the other two. I hope that it is clear based
10 on the discussion we had of the contamination in
11 the waste units that the no action alternative is
12 unacceptable.
13 This picture is a summary in very
14 brief form, one page of literally thousands of
15 pages of analysis, and somebody has called it our
16 consumer reports table because it's a kind of way
17 of comparing different alternatives that is I hope
18 legible and easy to understand. What we need to do
19 is spend a little bit of time going through this
20 table, both with respect to the criteria that we
21 use to evaluate these alternatives and the results
22 of the evaluation. I'm going to have to resort to
23 my pointer so you make sure what I'm talking
24 about.

1 These are the evaluation criteria.
2 Let's talk about them a little bit. In the first
3 place the evaluation criteria are given to us by
4 EPA, they're EPA guidance. They're the same for
5 every CERCLA site. These are the same criteria
6 that was used to evaluate and select remedial
7 alternatives for Operable Units 4 and Operable Unit
8 1. So the criteria are a given.
9 What do they mean? The first
10 criteria or criterium, which is singular, overall
11 protection of human health in the environment, is
12 an absolute or threshold requirement. If an
13 alternative doesn't meet this standard, it cannot
14 be carried forward for detailed comparative
15 analysis. So it's not useful to us in terms of
16 choosing the best alternative, but it's a threshold
17 that each of the alternatives must meet in order to
18 be considered any further.
19 The same thing is true for the second
20 criterium, which is compliance with ARARs. ARARs
21 are the laws, regulations, and policies that are
22 pertinent to this project. And again, all of the
23 alternatives must, must meet this standard. You'll
24 notice that one of our alternatives, on-site

1 disposal, meets it with a footnote, and that
2 footnote is important. It meets the ARARs with
3 waiver of the OEPA restriction on disposal of solid
4 waste over a high yield sole source aquifer. EPA
5 has already stated its intent to grant such a
6 waiver in order for us to successfully implement
7 this project. It's important to realize that this
8 waiver will be specific to Operable Unit 2 waste
9 only, and that those wastes would be generated only
10 during the cleanup of this Superfund project at
11 Operable Unit 2. The disposal of waste from other
12 sites under this waiver would not be legal.
13 Now we're going to get into some
14 criteria that are useful in terms of comparing and
15 selecting the best alternative. The third one,
16 long-term effectiveness and permanence is very
17 important and it's self-explanatory, and for the
18 first time you see a difference among the three
19 action alternatives. And the difference is that
20 the consolidation and containment alternative
21 doesn't rate as highly as the other two, and the
22 reason for that is as follows: For off-site
23 disposal you excavate the material, you transport
24 it off-site, in this case we're talking about

1 shipping it to Utah and placing it in an engineered
2 facility. That's a relatively permanent,
3 long-range effective solution.
4 The same is true for Alternative 6,
5 on-site disposal. You excavate the material from
6 the OU-2 waste units, you put it in an engineered
7 facility that's engineered for a very long
8 lifetime.
9 With Alternative 2, consolidation and
10 containment, there's a difference, and that
11 difference is that it was not being placed in an
12 engineered facility. The material was being kept
13 in place and it wouldn't have the liner, the
14 underdrain, and the leak detection systems that are
15 to be engineered as a part of the recommended
16 alternative. By the way, I would point out that at
17 the back of the room there's a life-size
18 cross-section of both the conceptual design for the
19 proposed capping system and liner system for the
20 on-site disposal facility. It would be a nice idea
21 to take a look at it during the break or
22 afterwards. I believe that was in response to some
23 discussion we had at our last meeting.
24 So with respect to long-term

1 effectiveness and permanence, the on-site disposal
2 and off-site disposal alternatives are better than
3 the consolidation and containment, and I'll point
4 out also that the engineering features associated
5 with a proposed disposal facility at Fernald far
6 exceed those of the facility in Utah. The facility
7 in Utah, for example, doesn't have the complex
8 liner, leak detection, and leachate collection
9 systems that the facility here would have.
10 The fourth criterium, reduction of
11 toxicity, mobility, or volume through treatment,
12 again it doesn't help us differentiate among the
13 alternatives because treatment is not effective for
14 OU-2 wastes. Concentrations are too low for an
15 effective treatment.
16 Short-term effectiveness, and this
17 one is a little bit of a misnomer that just comes
18 out of the lingo associated with feasibility
19 studies. What the short-term effectiveness really
20 is is a measure of the risk to workers and the
21 community during remediation itself. So the
22 consolidation and containment in place is the least
23 risky thing to do because you're not moving the
24 material around, so it ranks highest in that

1 regard.

2 I want to skip implementability

3 because I want to come back to that with a little

4 more of a detailed summary type of analysis on

5 that. So we'll skip over number 6 and come back

6 later.

7 Number 7 is cost, and that's measured

8 in terms of the present worth, the total present

9 worth of implementing each alternative.

10 Consolidation and containment is the least

11 expensive at about $70 million. Off-site disposal

12 is almost $213 million, and on-site disposal is

13 about $110 million in terms of present value.

14 State acceptance and community

15 acceptance is what we're doing now. You're part of

16 the process, and your input will be a part of the

17 decision making. However, through the process that

18 I explained when I started, we've heard quite a bit

19 of input from the community already. And it has I

20 would say highly discouraged our consideration of

21 consolidation and containment. Frankly, the idea

22 of consolidation and containment was not well

23 received by the community or by the State and that

24 has been given significant weight in the remainder

1 of our analysis.

2 However, it is important to keep in

3 mind when we talk about community acceptance and

4 State acceptance, we're not just talking about you,

5 we're not just talking about the Fernald community

6 because there's also a community in Utah and

7 communities in every state through which material

8 must pass for off-site disposal. Those individuals

9 are a part of this process as well. And those

10 states and state agencies are a part of the process

11 as well, and we have attempted to accommodate that

12 as a part of our analysis.

13 So let's come back to

14 implementability. With respect to the darkened

15 circles, it looks like a drawing, but it's really a

16 little more subtle than that. We believe that the

17 on-site disposal is the most implementable of the

18 alternatives when we consider cost and the

19 political realities of the situation, political

20 realities of attempting to send all material off

21 Fernald and into Utah and Nevada. And furthermore,

22 this on-site disposal recommendation is a part of a

23 consolidated comprehensive strategy for waste

24 management at the Fernald project. This won't be

1 the first time you've heard it whereby the most
2 hazardous materials are shipped off site. They
3 also happen to be a lower quantity of material, and
4 the large quantities of not so hazardous materials
5 would stay behind and be placed in an engineered
6 facility at the Fernald site.
7 So to summarize this table and our
8 analysis, I would say that we believe that on-site
9 disposal is worth the extra cost compared to
10 consolidation and containment due to its superior
11 long-term effectiveness and community acceptance.
12 We believe that on-site disposal is preferable to
13 off-site disposal due to its superior
14 implementability and its large favorable cost
15 difference to achieve the same total
16 protectiveness. So that's basically how we boil it
17 down.
18 For the record, the preferred
19 alternative is excavation and on-site disposal with
20 off-site disposal of the fraction exceeding waste
21 acceptance criteria.
22 I want to take just a few minutes and
23 sort of help you visualize what that means, and in
24 particular what this waste acceptance criteria

1 means. If we could dim the lights one more time, I
2 think that will be the last time.
3 We have calculated that the waste
4 acceptance criteria for uranium for the on-site
5 disposal facility should be on the order of 1,000
6 parts per million total uranium. That's very
7 close. We have identified a couple places in the
8 OU-2 waste units where we have contamination
9 exceeding that level and, therefore, this material
10 would have to be disposed of off-site, and again
11 we're planning on the Envirocare facility in Utah.
12 This is a picture of where that contamination is
13 that exceeds the waste acceptance criteria at the
14 solid waste landfill. We also have a picture of
15 the material exceeding the waste acceptance
16 criteria; in other words, the material exceeding a
17 thousand parts per million, which is about 360
18 picocuries per gram of U238, those are roughly
19 equivalent. And John is pointing to it at the
20 inactive flyash pile. In total there's about 3,000
21 cubic yards of material in the OU-2 waste units
22 that would have to be sent off-site. Thank you,
23 John.
24 For those of you who are more linear

1 brain and like things in tabular form, this table
2 presents the volume of material that would be
3 disposed of in the on-site facility by subunit in
4 OU-2. You can see that the total is approximately
5 300,000 cubic yards. The total that would go
6 off-site is about 1 percent of that or 3,000 cubic
7 yards. The average contamination that would be put
8 in the disposal facility is very, very low. As you
9 can see, the highest subunit is the inactive flyash
10 pile, and that's only 50 picocuries per gram. The
11 maximum concentrations are also pointed out, and
12 the cleanup levels are also there for reference.
13 Implementation of this alternative is
14 relatively straightforward. We would have to
15 prepare the site, which means preparing for
16 stormwater control, transportation, and so forth.
17 We would excavate the waste material that exceeds
18 cleanup levels at the subunits from OU-2 waste
19 units, we would carry it either to the on-site
20 disposal facility if it's below the waste
21 acceptance criteria, if it's above, we take it to
22 the railhead for off-site shipment. We'll restore
23 the excavated waste units with backfilling and
24 grading, revegetation, and we will control any

1 groundwater that's encountered during construction
2 and any what we call construction water or
3 stormwater that comes in contact with contaminated
4 material. That water will be collected, tested,
5 and treated.
6 And then in final summary, a concept
7 of the remedy, if you think back to the receptors
8 and the pathways that we have to manage at Operable
9 Unit 2, the strategy is to consolidate the material
10 exceeding cleanup levels into a single place,
11 locate that consolidated material in the most
12 suitable place on the site, isolate the material
13 from potential human environmental receptors,
14 monitor the facility to insure that protectiveness
15 performance is maintained over time, and finally to
16 integrate remediation at Operable Unit 2 with the
17 overall site remediation strategy.
18 That concludes my presentation and I
19 think Rod has the podium next.
20 MR. WARNER: Thanks, Jim. Before we
21 go into the question and answer period, I would
22 like to ask some representatives from our
23 regulatory agencies to come up and say a few
24 words. I think Jim Saric is here from US EPA,

1 Region 5, he's our regional program manager. Jim.
2 MR. SARIC: I think what you've seen
3 today, what Jim has gone forward explaining, some
4 of the preferred alternatives here, the preferred
5 remedy is really something that has gone through a
6 lot of discussion with our agencies, both the Ohio
7 EPA and US EPA looking at a large number of
8 alternatives. When this first Feasibility Study
9 and Proposed Plan came forward, it was presented
10 having the capping containment alternative, and it
11 really was through our own looking at the situation
12 here, we didn't feel real comfortable with that
13 particular alternative, talking to various
14 citizens, members of the Task Force, that I think
15 we all together pushed DOE into saying this needed
16 to be changed, something else needed to come
17 forward. We also were all under the understanding
18 that this site-wide kind of conceptual idea of the
19 most hazardous stuff, if you will, material being
20 disposed of off-site which represents a smaller
21 volume and certainly felt that was probably most
22 important, but yet the idea of having much larger
23 volume of materials of lower concentrations being
24 disposed on-site in a more managed form.

1 I think from our perspective, US EPA,
2 we support this alternative. We've done a lot of
3 review of looking into this thing and the big
4 picture of how things must go. I think if you look
5 at the idea of leaving waste in place or looking at
6 wastes as they sit today, and you take that waste
7 material and you put it in an engineered cell, I
8 think you're in a lot better state than you would
9 be by leaving the units in place.
10 Obviously we're here to hear your
11 comments, and this is by no means a final decision
12 today, and that's why we're here. We're going to
13 listen to all the comments, we're going to address
14 them, and we're going to look at DOE's responses to
15 them, so if you have any questions now or if you
16 have any questions afterwards, feel free to ask me
17 and tonight is the night to participate. This is a
18 very important stage in this cleanup, in the idea
19 of the concept of a disposal facility on-site. So
20 with that, I'll take any questions later. Thank
21 you.
22 MR. WARNER: Thanks, Jim. Now I
23 would like to bring up Tom Schneider from Ohio
24 EPA.

1 MR. SCHNEIDER: Good evening. I
2 would like to express our appreciation for all of
3 you coming out tonight to this very important
4 public comment period with regard to this
5 alternative and this operable unit and the future
6 of this site.
7 We would like to concur with what Jim
8 said. It's been certainly a long process by which
9 we got to this alternative and this plan or
10 approach for the waste at Fernald and what we have
11 been referring to at the agency as the balanced
12 approach, and that's where we get the worst waste
13 off site and manage the large volume of low level
14 waste on-site in a safe facility.
15 So we support DOE's preferred
16 alternative for Operable Unit 2, and especially in
17 light of those preferred alternatives for Operable
18 Unit 1 and Operable Unit 4, and on that note we
19 would like to express our appreciation for DOE
20 wrapping up today the exemption for the OU-1 waste
21 to go to Envirocare. That was going to be a big
22 concern of mine tonight and they took care of that
23 at the last second this afternoon. We're okay to
24 get the waste from OU-1 out to Envirocare from

1 DOE's own internal processes, so that's a good
2 point to tack on to what we're proposing here
3 tonight.
4 We look forward to your comments.
5 Like I said, this alternative addresses the future
6 of the Fernald site and the cleanups here and your
7 comments should address those, your comments should
8 address what you think the site should be in the
9 future, and particularly the State is concerned
10 with, as is a number of the public, off-site waste
11 potentially coming to this cell. I'm here to tell
12 you it's going to be the State's -- we're going to
13 use all the tools in our chest to make sure that
14 that doesn't happen. That will be our effort with
15 regard to how the ROD is written, that will be our
16 effort with regard to how enforcement is taken at
17 the site to be sure that off-site waste doesn't
18 come to this cell.
19 But your comments during this public
20 comment period can only reinforce the fact that
21 we're willing to take care of our problems here but
22 we are certainly not willing to accept additional
23 waste at the site. I just recommend that you use
24 this public comment period to the best of your

1 ability. We look forward to your comments tonight.
2 The public comment period extends on through the
3 Friday after Thanksgiving, the 28th, something like
4 that -- the 25th. So if you don't public comment
5 tonight, be sure and send something in in writing
6 if you want to go home and think about it for a
7 while. Thanks for coming out.
8 MR. WARNER: I would like to thank
9 Tom and Jim for all their support to this process.
10 It's been tedious, we've had a lot of meetings and
11 a lot of discussions, but I think where we are
12 tonight indicates we've come an awful long way.
13 With that I would like to open up the
14 question and answer period and use this opportunity
15 to fire away.
16 MR. WILLIAMS: I've been designated
17 to accept your questions.
18 MS. DASTILLUNG: On Alternative 6
19 when you have the costs there, it's only going out
20 30 years with the operations and maintenance. How
21 much is it approximately in today's dollars per
22 year that we'll have to pay to monitor that out
23 into infinity?
24 MR. WILLIAMS: Like from the 31st

1 year on?

2 MS. DASTILLUNG: Uh-huh.

3 MR. WILLIAMS: In today's dollars,

4 those amounts depreciate to almost nothing because

5 of the discount rate. That's present net value

6 accounting. If somebody offered you a hundred

7 dollars now or a hundred dollars in 31 years, which

8 would you take?

9 MS. DASTILLUNG: Okay, well then how

10 much is it going to cost to operate and maintain it

11 in the year say 15?

12 MR. WILLIAMS: What's our annual

13 budget for operations and maintenance roughly?

14 MR. JONES: Well, the annual budget

15 in the earlier years I think is somewhere about a

16 million dollars a year.

17 MR. WILLIAMS: But that's actual

18 operating.

19 MR. JONES: That's the operation and

20 maintenance amount.

21 MR. WILLIAMS: Your question gets

22 more at like after all the waste is in it, it's

23 closed up and it's just sitting there?

24 MS. DASTILLUNG: Right. It would be

1 about a million dollars a year to maintain it?
2 MR. JONES: Yeah.
3 MR. WILLIAMS: About a million a
4 year.
5 MS. DASTILLUNG: So in a hundred
6 years beyond that 30 we will have broken even on
7 the cost then approximately between three and six
8 or less?
9 MR. WILLIAMS: You can't do that
10 kind of accounting in your head. It's a problem
11 because of the time value of money. It's not
12 intuitive.
13 MS. DASTILLUNG: Okay.
14 MR. WILLSEY: Yes, I heard a few
15 words that kind of brought some questions to mind.
16 You said that you were going to have a permanent
17 site and it will be a lifelong housing of the
18 contamination. I think that's probably the same
19 words they used when they built the K-65 silos
20 probably, and that was probably 30 years or 40
21 years ago, but I think the same technology that was
22 available today was probably as important back then
23 as it is today. I think they thought they were
24 state of the art back then like you do today. So

1 when you say permanent and you say lifelong, I
2 don't understand that terminology because I don't
3 know what that means.
4 MR. WILLIAMS: I don't recall using
5 those exact words.
6 MR. WILLSEY: You did because I
7 wrote them down.
8 MR. WILLIAMS: I did refer to a
9 design life, and a design life at a disposal
10 facility, which is the -- is an engineering goal
11 for the thing to be essentially perfect for that
12 length of time, is 500 years. The design life for
13 the K-65 silos was 30 years.
14 MR. WILLSEY: I think they had that
15 one pretty well pegged, didn't they?
16 MR. WILLIAMS: They have exceeded
17 their projected design life.
18 MR. WILLSEY: You know, lifelong and
19 permanent, we have a permanent aquifer that that
20 plant sits on and it is permanent, and I understand
21 what that means. That will be our source of water
22 forever. I don't know how permanent your liners
23 are going to be, but I know that we have to drink
24 that water forever.

1 MR. WILLIAMS: Right. The intent is
2 not to construct the facility and close it and walk
3 away. The intent is and the requirement will be to
4 continuously monitor the facility, and in the event
5 that the facility begins to need attention, it will
6 receive that attention. That might be in 500 or a
7 thousand years, but the intent and the design is
8 not one that can be walked away from. That's why
9 continued federal ownership, continued federal
10 control is an integral part of the alternative.
11 MR. WILLSEY: Quite frankly, I don't
12 think the ownership is what we're concerned about.
13 I really don't think anyone wants the site. I
14 think what we're concerned about is who owns the
15 site and if they'll be there 500 years from now or
16 40 years from now when this thing, if it goes
17 sour. As I said before, we've lived with this
18 thing since the plant was built, and it was state
19 of the art when it was built, and all this that
20 happened was not going to happen. That's why we're
21 here. Personally I want to get rid of it. We've
22 had it for a long time, and our residents have
23 suffered for a long time. But as I said, my
24 question for you, I would like to know what your

1 definition of permanent is because you keep using
2 that word.
3 MR. WILLIAMS: Long-term
4 effectiveness and permanence is one of the criteria
5 that we evaluate, and you're talking about an
6 engineering facility here versus an engineered
7 facility in Utah, okay. They're both engineered
8 facilities. The engineering design of this
9 facility is more rigorous and more protected than
10 the one in Utah. The environments are different.
11 I'm not going to cloud over the issue that the Utah
12 environment is very different than the Ohio
13 environment, but the design life of the Fernald
14 facility was on the order of 30 years. Most of the
15 material that we're cleaning up now is not the
16 result of any engineered effort at all. In OU-2,
17 the material that I showed you, it was simply
18 dumped on the ground and covered up. So again
19 that's not something that is comparable to the
20 alternative we're proposing, which is an engineered
21 facility, the design life of 500 years, and
22 continuous monitoring, continuous review, and a
23 responsibility for continued maintenance of the
24 facility.

1 MS. YOCUM: Mine is on the fact
2 sheet that we received in the mail and as you came
3 through the door. On page 5 in the last paragraph
4 of selecting the preferred remedial alternative, it
5 says by combining all the waste into one disposal
6 location, Alternative 6 will allow reduced buffer
7 zone, and I'm concerned about the buffer zone. So
8 what does that mean reduced buffer zone, what is
9 the, do you have one like 300 yards or 300 feet, is
10 there a special number that is a buffer zone and if
11 it's a smaller area?
12 MR. WILLIAMS: It's 300 feet and
13 that's a minimum. That's a minimum from Ohio
14 regulations.
15 MS. YOCUM: Then you're talking
16 about reducing it?
17 MR. WILLIAMS: No, we're talking
18 about, you know, by putting all the material in one
19 place, you reduce, you know, the places that waste
20 exists, and so, therefore, you reduce the overall
21 impact on site land use. Basically you have the
22 least perimeter possible, you know, for a disposal
23 facility by putting it in one place. By
24 concentrating it in one place, it gives you more

1 conceptual flexibility of moving it around, and
2 that 300 feet is a minimum, it's not necessarily a
3 target that we're shooting for. It all depends on
4 the ultimate geometry, and it can be any shape
5 within engineering responsibility. There's a
6 degree of flexibility with regard to the shape. So
7 the 300 foot buffer zone is a minimum. And we will
8 not be able to have any less of a buffer on any
9 order than that. But we would only, only
10 conceptually be at most within 300 feet would be on
11 one border. You wouldn't be talking about
12 impacting multiple borders, which you would if you
13 didn't consolidate it.
14 MS. YOCUM: I have one more
15 question. With the design of the disposal cell --
16 do you have a picture of it on file?
17 MR. WILLIAMS: Do we have a picture
18 of it? We have a rendition.
19 MS. YOCUM: I just want to explain
20 the slope, there's going to be water laying on the
21 sides and there's going to be filtration.
22 MR. WILLIAMS: No, that's why the
23 sides are sloped.
24 MS. YOCUM: But if you constantly

1 have a downpour, I mean the water is going to
2 settle, it's not all going to run off the hill and
3 just be --
4 MR. WILLIAMS: Well, as a matter of
5 fact, that's one of the reasons that the cap, which
6 is depicted on the back wall there, the cap extends
7 down the sides as well as on top.
8 MS. YOCUM: It does extend down the
9 sides? Because in one of the drawings it didn't
10 look like it extended down the sides and that's why
11 I was wondering.
12 MR. WILLIAMS: Once again we have
13 heard input along those lines, and we have
14 responded.
15 MS. YOCUM: Okay.
16 MS. CRAWFORD: I have a couple
17 questions, and I need you to put this slide up on
18 your overhead.
19 MR. WILLIAMS: The comparison?
20 MS. CRAWFORD: Whatever, the one
21 with the little colorful dots on it. At the bottom
22 it says total present worth cost, and off-site it
23 says 212.8 and on-site it says 110.3 million or
24 billion, whatever.

1 MR. WILLIAMS: Those are millions.
2 MS. CRAWFORD: Millions. Does that
3 include the cost of the cell or does the cost of
4 the cell fall under OU-5?
5 MR. WILLIAMS: That includes the
6 cost of the cell for Operable Unit 2, for Operable
7 Unit 2 volumes, that's correct.
8 MS. CRAWFORD: So to get an overall
9 cost of the cell itself, are we able to do that
10 yet?
11 MR. WILLIAMS: Yes, we can, and in
12 fact OU-5 will be submitting their Feasibility
13 Study next week, and that will have the official
14 comparable cost estimates for the OU-5 volumes of
15 material as well as they're also looking at the
16 off-site alternative. So on more of a site-wide
17 perspective, it will have the capability of looking
18 at on-site versus off-site for a wider range of
19 cleanup volumes. This is specific to the 300,000
20 cubic yards for OU-2.
21 MS. CRAWFORD: Now, I need your
22 little computer man to put up his other little
23 thing that he had up there with them two little hot
24 pink boxes on it. My question is what's in them

1 two little pink boxes?
2 MR. WILLIAMS: No, no, those aren't
3 boxes.
4 MS. CRAWFORD: You know what I mean,
5 what's in those two hot pink areas?
6 MR. WILLIAMS: It's simply a higher
7 level of uranium.
8 MS. CRAWFORD: Yeah, I understand
9 that. I guess my question is -- I don't mean to
10 interrupt you -- what was it, what was buried there
11 that was way higher than the rest of the stuff?
12 MR. WILLIAMS: Well, I guess, I
13 don't mean to quibble, but when you're talking
14 about way higher, you're talking about maybe 500
15 picocuries per gram versus 50.
16 MS. CRAWFORD: It would seem to me
17 that's way higher, I'm sorry, but it is. We don't
18 need to argue about that.
19 MR. WILLIAMS: Let me show you --
20 where's that -- just for some comparison. Average
21 OU-2 stuff is about 25, average OU-5 stuff is about
22 the same. The waste acceptance criteria, as I
23 mentioned, is 360. The average OU-4 stuff is about
24 12,000, and the average OU-1 stuff -- I'm sorry,

1 1200, and the average OU-1 stuff is about 5500. So
2 what you're talking about is about one-tenth the
3 activity of OU-1 stuff. Just for perspective. The
4 reason it's higher is that there was not a
5 systematic process of putting stuff over time in
6 the landfill, it took odds and ends, so there's
7 just differences, there's variations within the
8 landfill. Parts of it are clean, parts of it are
9 25, parts of it are 50, and there's a couple little
10 areas that are 500. There's nothing particularly
11 remarkable about those samples.
12 MS. CRAWFORD: Well, let me quibble
13 back with you. And say that OU-4 is not going to
14 go in the waste cell, so I'm not even counting OU-4
15 at this point, so I don't think we can compare
16 those two at all. I guess when you show me
17 something like this and you show me two hot pink
18 little areas, I won't call them boxes but areas, on
19 the screen, it makes me wonder what the heck was
20 buried there that is higher than the other stuff.
21 I think folks would just kind of -- I mean are
22 there derbies buried in there? And if you don't
23 know, it's okay to say I don't know.
24 MR. WILLIAMS: We have not found any

1 sense of anything like derbies and so forth. The
2 operational history of the landfill is not well
3 understood. They didn't keep records. It was
4 essentially a place to put stuff you didn't want
5 anymore, and so they did that. However, just --
6 this is a good time to explain how things would
7 operate. How do you make sure you didn't miss one,
8 how do you know what you're putting in the cell is
9 what you say you're putting into the disposal
10 facility, and the plan is for every unit of
11 material that comes out of the waste units will be
12 screened and sampled right there before it's taken
13 to the disposal facility to insure that it meets
14 the waste acceptance criteria, and then that
15 characterization will be verified from the
16 stockpile at the disposal facility. It will be
17 looked at twice before it goes into the disposal
18 facility, and if it doesn't meet the waste
19 acceptance, then it doesn't go into the facility.
20 MS. CRAWFORD: Is there going to be
21 like a huge lag time by the time you pull it out of
22 this thing, you test it, and you sift through it to
23 make sure it's what you say it is until you get it
24 to put it in the waste cell?

1 MR. WILLIAMS: No. The screening at
2 the landfill or at the inactive flyash pile is
3 essentially going to be real time screening using
4 real time instruments. From the stockpile,
5 however, at the --
6 MS. CRAWFORD: Don't use the word
7 stockpile, that's not a good word.
8 MR. WILLIAMS: The FEMP working
9 material at the disposal facility. The samples
10 will be laboratory samples, and they will take a
11 little longer but just on the order of, days not
12 anything more than that.
13 MR. REISING: Jim, I think it is
14 important to respond to Lisa's question because
15 remember we did use trenching in the silos, we put
16 a number of trenches in there to see the type of
17 material that was actually in there. In fact, I
18 think Jerry is here who was the soil scientist in
19 charge of that operation, and also the fact that
20 the waste sample that you took, and that matrix is
21 a soil matrix, so there was solid waste material in
22 there, and we did go in and try to excavate and
23 find if there were solid objects, et cetera, and we
24 found very little of that.

1 MS. CRAWFORD: I guess I'm just
2 curious to know what it is that would cause those
3 two areas to be higher than the rest of it. I
4 guess ultimately there could be more than those two
5 little areas.
6 MR. SCHNEIDER: Certainly. I think
7 that's the benefit of excavating these areas versus
8 consolidating them in place. That's been a big
9 concern of the State, is you can punch a lot of
10 holes in an area like that and still not have a
11 good idea of what's there. What we do gain out of
12 excavation is a knowledge of everything you pick up
13 out there and we know what goes into the cell and
14 we know what's where. So I think that's what we
15 gain. These areas can just be as little as
16 somebody dug up a contaminated soil area which was
17 relatively high contamination, a thousand
18 picocuries, and dumped it into the landfill and it
19 just got mixed in with the rest. So it's not
20 necessarily that they dumped a particular type of
21 material there, just what got dumped in the
22 landfill on a daily basis, and those were two hot
23 spots. I'll be surprised if these are the only two
24 hot spots when they dig that landfill up. The

1 holes are only so big.
2 UNIDENTIFIED SPEAKER: Jim, your
3 alternative number 3, you keep mentioning that this
4 material is sited to go to Envirocare in Utah. Did
5 you look at the cost of sending it to Nevada Test
6 Site since we're talking about splitting out the
7 low level radioactive components?
8 MR. WILLIAMS: Yes, we did, and the
9 reason why we used Envirocare was it was much more
10 cost effective than the Nevada Test Site primarily
11 due to the transportation and packaging
12 requirements.
13 UNIDENTIFIED SPEAKER: My second
14 question would be, you're given a whack for U-238
15 concentrations, are there going to be other whacks
16 as well as for other uranium isotopes as well as
17 thorium and some of the other materials?
18 MR. WILLIAMS: Not for Operable Unit
19 2. Uranium is the only contaminant of concern for
20 groundwater within Operable Unit 2.
21 MR. BECKNER: Earlier you used the
22 term design life of 500 years. Since you could not
23 have possibly tested any of these things for
24 anywhere near that period, I'd like to know how you

1 can design for 500 years. Also knowing a design
2 life is something that's a target and much like say
3 diesel engines, some are going to fail at a
4 thousand miles, some are going to fail at 200,000,
5 what would be the low end of failure for that
6 device if you could guarantee that the mean life
7 was 500?
8 MR. WILLIAMS: As you say, there's
9 not an operational history of hundreds of years for
10 these types of engineering facilities. The way
11 that's accommodated in the design process is
12 through application of conservatism upon
13 conservatism, belts and suspenders and everything
14 else. And so I think the 500-year design life is
15 going to be realistic with respect to an Ohio
16 application. I think that it's not meaningful to
17 speculate on what the range would be.
18 MR. BECKNER: Then I suggest you
19 don't quote 500 because you really can't guarantee
20 it or even a fraction of it.
21 MR. WILLIAMS: Well, the engineers
22 have to have a target, that's the design life
23 target.
24 MR. BECKNER: Okay, then say it's a

1 target.

2 The second question, back to Vicky

3 was talking about finance, there's about a hundred

4 million dollar difference between the plan leaving

5 it on-site and taking it off-site. This gentleman

6 I think quoted I think a million dollars a year

7 maintenance for the on-site plan. If there is no

8 inflation, in about a hundred years you would have

9 spent as much for the one plan as the other.

10 Knowing inflation, anybody who has bought a car say

11 20 years ago and bought one recently, I think it

12 would be safe to say that within 50 years or less

13 you'd probably consume that second hundred

14 million. So I'd contend -- plus if it's gone, you

15 don't have to worry about that maintenance program

16 not only being funded but being carried out.

17 My last question I guess is of the

18 two EPA representatives, I'm just curious where you

19 live, where your personal residence is, I don't

20 mean address, but like is it in Ross Township?

21 MR. SARIC: I don't live in Ross

22 Township, I live in Chicago, the Chicago area.

23 MR. SCHNEIDER: Dayton.

24 UNIDENTIFIED SPEAKER: Because I

1 found them very supportive of the plan, I was just
2 curious how close to the area they lived.
3 MS. WEATHERUP: One point I would
4 just like to make is that we have the design life
5 and some of the safety factors that Jim was talking
6 about is one of the reasons why this site as well
7 as the uranium mill tailing sites and a lot of the
8 other sites have gone to the type of cap that you
9 see back there, put in large cobble areas to keep
10 burrowing animals and trees from growing, the
11 things that, you know, that could break down a cap
12 and cause more infiltration. In the liner we have
13 not only a leachate collection system, but also a
14 leak detection system, and that's something that
15 you're able to monitor for a very long time, and if
16 there's a problem, then you'll know about it before
17 it ever begins to impact the aquifer. So that's
18 why the monitoring is key and that's why having
19 that liner, as Tom was saying, gives that added
20 level of protection and comfort and an ability to
21 do something if the containment isn't lasting.
22 UNIDENTIFIED SPEAKER: That sounds
23 very impressive, but the problem is it still needs
24 to be monitored, it still has to be paid for, and

1 with this gentleman's point he just made, and I
2 want to emphasize that point, that initial cost of
3 off-site disposal of course is going to exceed
4 Alternative 6, but in the long run Alternative 6 is
5 going to far exceed Alternative 3. And somebody is
6 going to have to pay for that, and future
7 generations are going to have that burden. Of
8 course, they'll have the alternative to not pay, to
9 cancel the monitoring. Then we run the risk of in
10 the future the aquifer being further contaminated
11 because the monitoring has been cut off. We favor
12 here, we favor off-site, we favor Alternative 3.
13 MR. WILLIAMS: If I can detect a
14 question in there, it might have to do with did we
15 accurately consider operations and maintenance in
16 the cost comparison. Just because we send the
17 material off-site, you know, from here, it doesn't
18 disappear. It's still going to require operations
19 and maintenance, and people are going to be worried
20 about it and taxpayers are going to go paying for
21 worrying about it whether it's in Utah or here.
22 UNIDENTIFIED SPEAKER: But in that
23 area climate you don't have near the concerns you
24 have over an aquifer.

1 MR. WILLIAMS: It's a different
2 climate, agreed.
3 MS. DUNN: I want to just respond to
4 a couple of these comments because I live in Crosby
5 Township, less than a mile from the site, and I am
6 willing to accept the preferred alternative because
7 there are a lot of other people in this country who
8 are dealing with this same issue, and they don't
9 want this stuff in their backyard either, and if we
10 can get the worst of this stuff out of here, I
11 think the least we can do is be responsible for
12 what we can safely keep here.
13 MR. WILLIAMS: Well, if there are no
14 further questions, I believe we're due for a break
15 of about ten minutes, and then we'll come back and
16 take your comments.
17 MR. WARNER: If you want to register
18 and make a verbal comment, please do so now or hand
19 in any written comments.
20 (Brief recess.)
21 MR. WARNER: I think we'll start the
22 formal session of this meeting now. I'm going to
23 call out the names of those who registered and
24 indicated they wanted to make a verbal comment, and

1 after we've called everybody's name and they've
2 made their comments, we will open the floor for any
3 additional comments, and after that we'll read a
4 couple of comments that we've received that were
5 written on the cards. Again I would like to
6 emphasize that responses will not be presented this
7 evening to your comments. You will find them in
8 the responsiveness summary document that will be
9 submitted with the draft Record of Decision in
10 January of this year.
11 If there's no questions, I would like
12 you to come up to the microphone, clearly state
13 your name, and then present your comment. Our
14 first commenter will be Tom Willsey.
15 MR. WILLSEY: My name is Tom
16 Willsey, and I'm a township trustee from Ross
17 Township.
18 A lot of you people have not seen
19 us -- Don King is also here, he's a township
20 trustee. We have not been to a lot of these
21 meetings because at this point we have never really
22 been in an adversarial position with you folks, but
23 I think now we are. I've been a trustee, I'm in my
24 ninth year, so this didn't just happen to me last

night. We've known about the problems and all the things that went on in that plant for some time, and for ten years now we pretty much believed that they were going to clean up, they were going to move it off site, and we believed that because that's pretty much what you told us. Now I'm seeing where it's permanent, lifelong. I don't think you plan on moving it. Our people in Ross Township, they have a permanent stake in this, and permanent to them is lifelong because they will be there all their lives. So we feel that the meaning of permanent means something different to us than it does to you. We have been dumped on, we've had, of course, the uranium blow on us. We put up with it for a long time, and like I said, we have been very cooperative to this point.

We've watched different things happen in our area that we're not real happy with, our property values obviously went down, that's a matter of record, I'm not making that up, but we tell people, hey, it's a good area, they're cleaning it up, look at all the things they're doing. Well, you're not doing that. We've had it for four years.

I look at all your charts and your graphs and I see the Alternative 3, I see Alternative 6, 1, 2, I don't know how many there were, but the thing that glares out and hits me on the nose on Alternative 3 and Alternative 6 is 212 million versus 110 million. Cost, money. Quite frankly, if you've ever been to Washington, DC, cost has never been a factor to the federal government. They're a monument to what you can do with unlimited funds. On every street corner there's a monument to something or somebody. So cost should not be a factor. This cost to me is not a factor. The well-being off our residents and our township is a factor to me.

We will go on record as being opposed to this, and quite frankly, we're going to try to get a ground swell of people to be opposed to it also. I didn't want to be adversarial about this and I'm still not. I just want it moved. I don't care what it costs. I'm paying for it anyway. I would rather pay for it out of my pocket than pay for it with the lives of my family. Thank you.

MR. WARNER: Thank you, Tom, we appreciate your comment.

1 MR. WILLSEY: Sorry, one more thing,
2 Don and I have to leave because we have a levy on
3 and we're going to get up to the Board of
4 Elections, we're supposed to be up there. Thank
5 you very much.
6 MR. WARNER: We appreciate your
7 participation. Richard Strimple.
8 MR. STRIMPLE: I'm going to just
9 make a little statement on water aquifers. If it
10 is polluted, it's already polluted.
11 MR. WARNER: You are Richard
12 Strimple?
13 MR. STRIMPLE: Yes, I'm sorry. It's
14 polluted forever and there's no going to be a
15 permanent digging it up and hauling it out. You
16 will dilute it, you will cut your options, but for
17 somebody to think that they're going to clean it
18 up, it's spitting into the wind, period.
19 MR. WARNER: Thank you, Richard.
20 Russ Beckner.
21 MR. BECKNER: My name is Russ
22 Beckner, I'm a resident of Ross Township and live
23 1,500 feet from the site.
24 I would just like to go on record

1 that I support Alternative 3 versus 6 for the
2 following reasons: One, I feel it's definitely the
3 safest choice for the area. Second, long term it
4 is definitely the least expensive, and long term
5 would only be a few decades, not a century. Today
6 no one can guarantee that a quality maintenance
7 program will be put in place and maintained because
8 the people doing it are very possibly not even
9 alive today, and I think some of the things we've
10 seen occur at this site in the last four decades
11 confirm that.
12 Also I would ask our EPA
13 representatives to give a second thought, would
14 they be so positive around the plan they support if
15 they lived 1,500 feet from the site as opposed to
16 the locations they mentioned. And the last thing,
17 as I said earlier, there's no one that can design
18 anything today that hasn't been designed before and
19 guarantee it will have a 500-year life. Thank
20 you.
21 MR. WARNER: Thank you, Russ. Are
22 there any other comments from the floor? That was
23 the last of our registered commenters. Yes, sir,
24 you want to come up and state your name, please.

1 MR. STORER: I'm Gary Storer, I'm
2 Crosby Township Trustee and also a resident within
3 one mile of the plant.
4 I wanted to make a point versus
5 alternative, versus Alternative 6. I favor
6 Alternative 3 based on the fact the initial cost,
7 212 million, will be exceeded by the initial cost
8 of Alternative 6, which is 110 million, in the fact
9 that the required monitoring over a number of years
10 in the future will far exceed Alternative 3. So
11 basically I don't see putting that burden on, I
12 don't see putting that burden on future
13 generations, however many years it would be down
14 the road, maybe a hundred years or more. I don't
15 feel it's fair to put that burden of monitoring,
16 which is going to far exceed Alternative 3. So I
17 oppose Alternative 6 and I prefer Alternative 3.
18 Thanks.
19 MR. WARNER: Thank you. Any other
20 comments?
21 We've got two to read into the record
22 here. I'm not sure I pronounce this last name,
23 Judy Suzurikawa. The Cincinnati Water Works
24 received notification of the public hearing and

1 comment period on November 7th. We have not had
2 sufficient time to review the options and their
3 impact on water quality and the sole source aquifer
4 which supplies many residents of Butler County and
5 northern Hamilton County. Also, wells in the area
6 of the FERMCO project provide water to major
7 industries in the Greater Cincinnati area (Fortune
8 500 companies), which provide employment, which
9 contributes to the economic health of the region.
10 And Judy is a chemist with the Cincinnati Water
11 Works. Thank you.
12 This final comment is from Darrell
13 Huff. I am submitting these formal comments on
14 Operable Unit 2 Proposed Plan. I'm a Morgan
15 Township resident, a member of the Fernald Citizens
16 Task Force, the chair of the Citizens Task Force
17 Waste Disposition Subcommittee. I submit these
18 comments, however, as a concerned area resident and
19 not as a representative of any of the
20 aforementioned groups.
21 One, I do not think forcing area
22 residents to accept a permanent disposal cell is
23 fair. No one asked us whether we wanted DOE to
24 come here in the first place, nobody even told us

1 what was going on at this site for decades.
2 Two, when all is said and done, DOE
3 will have buried the waste, packed up and moved
4 out. Area residents will be left with no benefit
5 from the site having been there. Only the waste
6 will remain, and it will stay forever.
7 Three, area residents are not being
8 unreasonable in asking DOE to ship the OU-2 waste
9 off-site. There were two reasons for this. A,
10 cost. The cost of the off-site option is
11 approximately $213 million. The cost of disposal
12 cell option is $110 million. If something should
13 go wrong with the disposal cell, it might bring the
14 cost of the disposal cell option much closer to
15 that of the off-site option. B, long term safety.
16 Places like Utah, Nevada are much better suited for
17 disposal of the waste because they aren't located
18 over water sources and also receive less rainfall.
19 Four, I have doubts that large
20 numbers of the public understand what a permanent
21 disposal cell really means to the area.
22 Five, extensive opportunities for
23 meaningful public involvement should be planned for
24 after the signing of the ROD. The community

1 relations plan draft that was circulated in
2 September does not give any concrete examples of
3 what public involvement will be after the ROD is
4 signed. That is unacceptable. DOE officials must
5 firmly commit themselves in writing before the ROD
6 is signed seeking public involvement, a specific
7 time frame, the RA time frame and beyond after the
8 ROD is made official.
9 Six, if DOE does not construct a
10 disposal cell on-site, absolutely no off-site waste
11 will be disposed of in the cell -- excuse me, if
12 DOE does construct a disposal cell on-site. I add
13 this comment reluctantly as I still do not believe
14 the cell should exist. The land there should be
15 left in the best condition possible. Area
16 residents have already sacrificed enough for God
17 and country.
18 Seven, the waste acceptance criteria
19 of 360 picocuries per gram must be a maximum
20 allowable figure for any waste that goes into the
21 cell. It cannot be an average or a soft ceiling
22 limit.
23 Eight, DOE headquarters must issue a
24 final ruling on the current ban on disposal of DOE

1 waste at a permit commercial disposal facility.
2 DOE headquarters has had plenty of time to study
3 the problem. Thank you.
4 And that's the final written comment,
5 so if there are no other comments, we will bring
6 this meeting to a close and I would like to ask you
7 to remember to fill out the evaluation form if you
8 will please, and place them on the desk by the
9 door. Again, thank you all for coming. It was
10 nice to see some new faces here.
11 - - -
12 MEETING CONCLUDED
13 - - -
14
15
16
17
18
19
20
21
22
23
24

1 C E R T I F I C A T E

2 I, LOIS A. ROELL, RPR, the undersigned, a
3 notary public-court reporter, do hereby certify
4 that at the time and place stated herein, I
5 recorded in stenotypy and thereafter had
6 transcribed with computer-aided transcription the
7 within (59) fifty-nine pages, and that the
8 foregoing transcript of proceedings is a complete
9 and accurate report of my said stenotypy notes.
10
11
12
13 MY COMMISSION EXPIRES: LOIS A. ROELL, RPR
14 AUGUST 12, 1997. NOTARY PUBLIC-STATE OF OHIO
15
16
17
18
19
20
21
22
23
24

000600

ATTACHMENT III

DISTRIBUTION LIST

DISTRIBUTION LIST FOR
THE OPERABLE UNIT 2 ROD - SUBMITTAL TO EPA

EPA AND OEPA
J. Saric, USEPA-V, 5HRE-8J
G. Jablonowski, USEPA-V, AT-18J
B. Barwick, USEPA-V, 5HRE-8J
G. Mitchell, OEPA-Dayton
J. Kwasniewski, OEPA-Columbus
P. Harris, OEPA-Dayton
R. Owen, OH Dept. of Health-Columbus
M. Proffitt, OEPA-Dayton
T. Schneider, OEPA-Dayton
F. Bell, ATSDR
J. Michaels, PRC
R. Cohan, GeoTrans

DOE Fernald
R. Warner
D. Rast
C. Fermaintt
E. Skintik
G. Stegner
J. Jalovec
DOE Files (Original)
G. Becker, MTC
S. Gibson, MTC

DOE Headquarters
M. McCune
K. Chaney
D. Kozlowski
S. Pearce, BA&H

Nevada Distribution
W. Griffin, DOE NTS
State of Nevada

FERMCO CRU2 Distribution
N. Weatherup
G. Jones
S. Garland
D. Walker
C. Esselman
File Copy

FERMCO
Office of the President (2 copies)
OP - E. Evered
CRU1 - R. Fellman
CRU3 - S. Houser
CRU3 - L. Goidell
CRU4 - M. Skriba
CRU5 - D. Carr
CRU5 - E. Dupuis-Nouille
ENV - R.D. George
EC - T. Hagen
Legal - R. Holmes
NRM - A. Taylor
NRM - J. Mailander
PA - J. Foster
AR Coordinator (2 copies)

w/o enclosure
J. Thiesing
M. Yates