1-203.3 [redacted]

2038

Operable Unit 1 Remedial Design
Pre-Final Design Package I

Volume 1 of 2

Fernald Environmental Management Project
Fernald, Ohio
Fernald Area Office

March 1996

EDC

United States Department of Energy

[redacted]

[redacted]

2038

ROADMAP

OU1 Pre-Final Design Package Contents

Deliverable	Components	Content
PACKAGE I (Volume 1 of 2)		
PLANT FACILITIES DESIGN CRITERIA PACKAGE	Design Criteria Document (DCD)	Documents the specific criteria which affect the design, including all pertinent DOE orders, engineering design codes, standards and requirements, etc.
	ARARs and TBC Requirements (Appendix A of DCD)	Discusses how the ARARs and TBCs are addressed through the design.
	Substantive Permit Crosswalk (Appendix B of DCD)	Provides overview of specific substantive permitting and ARAR-driven requirements associated with OU1 remediation.
	Results of the Studies/Tests Relevant to Remediation System Design (Appendix C of DCD)	Summarizes results of studies, reports, and/or evaluations in support of the design. (Results from DEEP are included in the Technical Summary of DEEP Test Data).
	Dryer Off-Gas Stack Limits (Appendix D of DCD)	Provides quantitative limits for composition of dryer off-gas.
PLANT FACILITIES ENGINEERING	Process Description	Describes the operation and process used to treat the waste, including wastewater handling as shown on the Process Flow Diagrams.
	Control Philosophy	Covers the general operating and control philosophy for the remediation facility, including a description of the instrumentation concept, on a system-by-system basis as shown on the Process Flow Diagrams.
	Mass Balances	Includes Mass Balances for all waste pits. The data is organized to correspond with the Process Flow Diagrams.
	Process Flow Diagrams	Includes Process Flow Diagrams for waste retrieval, waste preparation, drying, off-gas treatment, and dried waste blending and loadout.
	Equipment List	Includes a listing of the equipment associated with the process.
	General Arrangement Drawings	Includes a civil preliminary site plan, a civil preliminary utility plan, and material handling plans and sections for the pit waste remediation area, waste preparation area, the drying facility, and the blending and rail loadout facility.
SITE IMPROVEMENT PLAN	Description of Site Preparation Activities	Presents the contents of the Site Improvement Plan and their interrelationship.
	Civil Site Plan	Drawing depicting the general improvements to the site.
	Civil Utility Plan	Drawings showing the location and details of subsurface utilities.
	Civil Grading Plan	Drawings depicting the grading plan and details.
	Civil Utility Profiles and Civil Details	Drawings show details of subsurface features
	Civil Specifications	Construction specifications to support the site improvement activities.
	Utility Requirements	Estimate of utility needs for operating the remediation facilities.
	Description of On-Site Rail Improvements	Description of on-site rail improvements, including a layout figure showing the rail upgrades and construction required to support on-site operations, along with a description of the logistics associated with receiving, loading, storing, and moving full and empty cars.
	Off-Site Rail Upgrades	Discussion of the work to be performed by CSXT to repair or upgrade the rail system from the FEMP to Cottage Grove, Indiana.
CONSTRUCTION SCHEDULE	Construction Schedule	Estimate of the time required to complete the remedial action activities including an identification of the major construction tasks and subtasks.

OU1 Pre-Final Design Package Contents

Deliverable	Components	Content
PACKAGE I (Volume 2 of 2)		
EQUIPMENT SPECIFICATIONS	Debris and Process Shredders	Includes the performance specification for the shredders, motor and associated electrical materials.
	Indirect Dryer	Includes the performance specification for the indirect rotary dryer, motor, electrical materials, heat tracing, piping, pipe supports, and insulation.
	Off-Gas Treatment System	Includes draft specifications for the components of the Off-Gas Control System.
	Waste Loadout System	Includes the waste loadout system description.

Deliverable	Components	Content
PACKAGE II		
EXCAVATION PLAN	Waste Excavation Plan	Description of processes to be used in the excavation of waste from each of the various waste units and transfer to the processing facility, the basis of which is reflective of the results of the Dewatering Excavation Evaluation Program. Discussion is provided on stormwater management, dust and fugitive emissions control, and monitoring during excavation, although specific sampling and analysis details will be identified in the Remedial Action Work Plan. The plan discusses needed coordination with other FEMP groups related to soils excavation, and the management of oversized debris.
	Materials Management (Appendix A of Excavation Plan)	Discusses various forms of materials which can be expected to be generated through the OU1 excavation activities, and special waste handling needs associated with some of these materials (i.e., those which could potentially go to the on-site disposal facility).
	Conceptual Drawings (Appendix B of Excavation Plan)	Provides drawings of various excavation plans, sections, and civil details.
	Technical Summary of DEEP Test Data	Provides a summary of the results of the various phases of DEEP, including physical and engineering properties of the in situ waste.
SITE RESTORATION PLAN - Although identified in the RDWP, this design activity is no longer within the scope of the OU1 remediation design, but will be more appropriately covered on a site-wide basis.		
TRANSPORTATION AND DISPOSAL PLAN	Transportation and Disposal Plan	Description of plan for shipping waste to the PCDF and as required to NTS, including discussion of rail transportation concepts, shipment containers, plan for tracking of shipments, emergency response plan, and waste characterization testing and analysis requirements associated with meeting the waste acceptance criteria of the PCDF.

Roadmap to FEMP OU1 Pre-Final Design Package

1.0 Purpose of Documents

The documents described in Sections 4 and 5 of this Roadmap constitute the Pre-final Design submitted to the United States Environmental Protection Agency (US EPA)/Ohio Environmental Protection Agency (Ohio EPA) for the remediation of the Fernald Environmental Management Project (FEMP) Operable Unit 1 (OU1) facilities. The *Addendum to the Remedial Design Work Plan* (ARDWP) attached to the letter of transmittal of this Pre-Final Design Package provides an explanation of the Alternative Remedial Action Subcontracting Approach (ARASA) that the DOE now plans to use for remediation of OU1. It further provides a discussion of how the various sections of this Pre-Final Design Package will be applied to the ARASA. The Roadmap describes the documents and changes which have taken place since the October 24, 1995, Preliminary Engineering package issue. An insert presenting a quick reference to the OU1 Pre-final Design Package contents is included at the beginning of this section.

2.0 Background

2.1 Facility Description

The FEMP site is a 425-hectare (1,050-acre), government-owned facility located approximately 29 kilometers (18 miles) northwest of the city of Cincinnati, Ohio. It is situated on the boundary between Hamilton and Butler Counties. The FEMP, which operated under the name of the Feed Materials Production Center, produced high purity uranium metal products for the United States Department of Energy (DOE) and its predecessor agencies from 1952 to 1989. Former uranium processing operations at the FEMP were limited to a fenced, 55-hectare (136-acre) tract, closed to public access, known as the Production Area. Production activities ceased in 1989 due to a declining demand for uranium feed products. In June 1991, the site was officially closed for production by an act of Congress. The Fernald site was included on the Comprehensive Environmental Response, Compensation, and Liability Act National Priorities List in 1989. The current mission of the site is the safe environmental restoration of the site in accordance with all applicable requirements.

OU1 is a well-defined, 15.3-hectare (37.7-acre) area located in the northwest quadrant of the FEMP site. Large quantities of liquid and solid wastes that were generated by various chemical and metallurgical processing operations were stored or disposed in six waste pits and the Clearwell, or burned in the Burn Pit. These waste pits are located in a portion of the FEMP Waste Storage Area and are contained within the boundaries of OU1. A detailed discussion of each waste pit's construction, contents, and volume of waste material is provided in the Remedial Investigation Report for Operable Unit 1 (DOE 1994).

2.2 Remediation Strategy

Remediation of OU1 is based on the final Record of Decision (ROD) for Remedial Actions at Operable Unit 1 (DOE 1995a), signed by the US EPA on March 1, 1995. The overall goal of the OU1 remedial action is to safely remediate all the OU1 components in a timely, efficient, and cost-effective manner, ensuring compliance with all Applicable or Relevant and Appropriate Requirements (ARARs), and protecting human health and the environment. Additional detail may be found in the enclosed documents and in the Final RDWP for Remedial Actions at Operable Unit 1 (DOE 1995b). The selected remedy presented in the OU1 ROD is excavation of the waste pit contents, waste processing and treatment by thermal drying (as necessary to remove free water), and off-site disposal at a Permitted Commercial Disposal Facility.

3.0 General Structure of Pre-Final Design Packages

This submittal consists of the following elements as defined in the Final RDWP for Remedial Actions at Operable Unit 1 (DOE 1995b). The information is divided into two packages.

1) Package I addresses the equipment and facilities directly associated with the processing of the waste and the plan which describes site preparation activities necessary to support processing.

2) Package II addresses the operational plans associated with waste excavation, site restoration, and waste transportation and disposal.

To the extent possible, various documents reference each other instead of repeating detailed information.

In accordance with the approach presented in the DOE Proposal for Integration of Sitewide Planning (submitted to the US EPA and Ohio EPA by letter of August 18, 1995 [DOE 1995c]), the Site Restoration Plan, a design deliverable, is intentionally not included in this design package. Site restoration is more appropriately covered on a sitewide basis in a sitewide design package submitted pursuant to the OU5 remedial design process and, therefore, is deferred from the OU1 Remedial Design documentation.

3.1 Changes from Preliminary Design Package

This set of documents has been updated with additional design details, as well as responses to comments received from the US EPA and Ohio EPA on the Preliminary Design Package (submitted October 1995).

Various design improvements are also incorporated in this package. They are reviewed in Table 3-1 and summarized in Table 3-2.

Table 3-1 - Major Design Issues and Affected Documents

	Major Design Issues	Documents Affected
	Process Issues	
1.	A review of the various issues associated with placing debris from the waste pits into the On-Site Disposal Facility determined that there is no significant benefit in this option. Therefore, all debris originating in the pits will be sent off site for disposal. Soil beneath the pits may still be sent for on-site disposal. (Materials from the D&D activities will be addressed through Facilities D&D remedial planning documents and may or may not go to on-site disposal.)	- Design Criteria Document - Process Description - Mass Balances - Process Flow Diagram - Waste Excavation Plan Appendix A (Materials Management Plan)
2.	The OU1 Remediation System is capable of producing a maximum of 150,000 tons of dried waste product per year as loaded in the railcars. This correlates to a 680 tons per day loadout rate (decreased from the previous 960 tons per day rate), 5 days per week operation, 52 weeks per year, with an assumed operating efficiency of 85 percent. This is based on the current projected maximum annual funding level. The waste product has a moisture content with ±5 percent of the optimum moisture content as determined by the Standard Proctor Test. Note: The previous version of the mass balances reflecting the maximum loadout rate of 960 tons/day is included in this package. Corrected mass balances (to reflect the reduced processing rate) will be produced. Adequate design information was available to update the other documents noted.	- Design Criteria Document - Equipment List - General Arrangement Drawings - Description of On-Site Rail Improvements - Shredder Specification - Waste Loadout Description
3.	Rad waste acceptance criteria sampling is done prior to drying instead of prior to railcar loadout. With only acceptable waste being dried, the analytical holding period for filled railcars is reduced to 24 hours. Additional WAC confirmation samples are taken from the processed and blended waste as it is loaded in the railcars. Some fraction of these samples may be analyzed to confirm the screening results before the unit train leaves the site. The remaining samples are retained as reference samples in case the disposal facility finds a problem with a railcar shipment.) Proctor testing to determine optimum moisture of the final mixed product and actual moisture content of the feed is also done on the waste prior to drying. Real time moisture measurements (neutron probe) are made at the dryer discharge to ensure product moisture is in the acceptable range (optimum ±5 percent) for shipping.	- Design Criteria Document - Process Description - Control Philosophy - Process Flow Diagrams - Waste Loadout System

Table 3-1 - Major Design Issues and Affected Documents (Continued)

	Major Design Issues	Documents Affected
	Facility Configuration Issues	
4.	To reduce the overall facility layout, sizes of various interim storage piles are reduced. This decreases the overall footprint of the waste preparation area by 55 percent to 140 by 420 feet and the overall footprint of the waste loadout area by 45 percent to 135 by 370 feet. The following storage piles (surge capacities) are affected: Wet Waste Pile: Reduced to 2,350 yd^3 total Dryer Feed Pile*: Reduced to 2,650 yd^3 total Loadout Storage Piles: Reduced to 1,460 yd^3 total * The dryer feed pile is divided into five sections with partial walls running parallel to the flow of material to contain the daily feed blends. The capacity of the "Contingency Stockpile" north of the process facility is as large as the area accommodates (not to exceed approximately 7,000 yd^3).	- Design Criteria Document - Process Description - Control Philosophy - Process Flow Diagrams - Equipment List - General Arrangement Drawings - Description of Site Preparation Activities - Utility Requirements
5.	One of the four original railcar bays was also eliminated to reduce the size of the facilities. In the current design, the railcar lidding and lining is conducted in the first bay in the building (south side). Loading waste into the railcars is done in the second bay. The third and last bay is designated for radiological survey and decontamination (if necessary) of the exterior of the railcars.	- Design Criteria Document - General Arrangement Drawings - Description of On-Site Rail Upgrades - Waste Loadout Description
6.	"Rainbreaks," which are rigid, partial walls that extend from the roof, are used near waste piles to protect them from precipitation. A roof overhang (approximately 30 feet wide) is added on the west end of the building to protect the waste from precipitation in the receiving area. (Mechanical ventilation of the open-sided buildings is not anticipated. Vehicle operators are in enclosed cabs equipped with air filters.)	- Design Criteria Document - General Arrangement Drawings
7.	Engineered buildings with approximately 50-foot center columns are used in lieu of pre-engineered or tension support structures. Column design incorporates protection against damage from mobile equipment.	- Design Criteria Document - General Arrangement Drawings

Table 3-1 - Major Design Issues and Affected Documents (Continued)

Major Design Issues	Documents Affected
8. An equivalency request for local DOE Fire Protection concurrence/approval has been made based on the following design criteria for the fire protection systems: • Dry chemical fire extinguishers are located in the immediate vicinity of the debris and process shredders. (Fire suppression systems built into the shredders by the shredder manufacturers are not necessary) • Dry-pipe sprinkler systems are installed over the metal detection/segregation system, over the indirect dryer, and at dryer end enclosures. • A wet-pipe sprinkler system is installed in the mechanical/electrical control building. • No sprinklers are required for the loadout building. • The fire loop surrounding the process facility is eliminated except for short underground main to meet the reduced fire sprinkling and hydrant requirements. This request has been reflected in these documents. Upon approval of the equivalency request, the listed documents will be revised, as necessary.	- Design Criteria Document - Description of Site Preparation Activities - Utility Requirements - Shredder Specification
9. The layout of the railyard has been modified to better use the existing space and permit cost-effective and environmentally sound remediation of the northeast section of the FEMP according to the Soil Remediation Project schedule. The Soil Remediation Project can now proceed with soil remediation from north to south starting first in the area where the new railyard will be located. • The main railyard has been moved north of the site. • Existing Tracks 1 and 2 are not used. • Track 14 is used to store full railcars awaiting analysis of exterior swipe samples for radiological control and possible additional Waste Acceptance Criteria verification analysis of waste samples. (The railcars are not held on Track 14 for longer than 24 hours for these analyses.) • The radiological control point and final car wash building (on the north track) and railcar/locomotive maintenance building are currently eliminated from the design, but space for the buildings is maintained.	- Design Criteria Document - Description of On-Site Rail Improvements - General Arrangement Drawings

Table 3-2 - Checklist of Major Design Changes Incorporated in Pre-Final Design Documents
(March 1996 EPA Submittal)

DOCUMENT	1	2	3	4	5	6	7	8	9
Design Criteria Document	✓	✓	✓	✓	✓	✓	✓	✓	✓
Process Description	✓	✓	✓	✓	✓	N/A	N/A	N/A	N/A
Control Philosophy	N/A	N/A	✓	✓	N/A	N/A	N/A	N/A	N/A
Mass Balances	✓	(1)	N/A	N/A	N/A	N/A	N/A	N/A	N/A
Process Flow Diagrams	✓	N/A	✓	✓	N/A	N/A	N/A	N/A	N/A
Equipment List	N/A	✓	N/A	✓	N/A	N/A	N/A	N/A	N/A
General Arrangement Drawings	N/A	✓	N/A	✓	✓	✓	✓	N/A	✓
Description of Site Preparation Activities	N/A	N/A	N/A	✓	N/A	N/A	N/A	✓	N/A
Civil Site Plan	The drawings and specifications included in the *Site Improvement Plan* were issued Certified for Construction, Revision 0, on February 14, 1996. They have been revised to reflect value engineering changes and are undergoing a final review before reissue as Revision 1.								
Civil Utility Plan									
Civil Grading Plan									
Civil Utility Profiles and Civil Details									
Civil Specifications									
Utility Requirements	N/A	N/A	N/A	✓	N/A	N/A	N/A	✓	N/A
Description of On-Site Rail Improvements	N/A	✓	✓	N/A	✓	N/A	N/A	N/A	✓
Off-Site Rail Upgrades	NOT AFFECTED								
Construction Schedule	NOT AFFECTED								
Debris and Process Shredder Specification	N/A	✓	N/A	N/A	N/A	N/A	N/A	✓	N/A
Indirect Dryer Specification	NOT AFFECTED								
Off-Gas Treatment Specification	NOT AFFECTED								
Waste Loadout System	N/A	✓	✓	N/A	✓	N/A	N/A	N/A	N/A
Waste Excavation Plan/ Materials Management Plan	✓	N/A	N/A	N/A	N/A	N/A	N/A	N/A	N/A
Technical Summary of DEEP Test Data	NOT AFFECTED								
Transportation and Disposal Plan	N/A	N/A	N/A	N/A	N/A	N/A	N/A	N/A	✓

✓ Design issue has been incorporated in documents
(1) Mass balances are not yet modified. All other documents reflect the new processing rates.
N/A Not Affected

Some basic terminology changes may also be evident in the various documents due to recent management modifications at the FEMP:

2038

1) CRU-1 is replaced with Waste Pit Remedial Action Project.
2) CRU-2 is replaced with Soil Remediation Project.
3) CRU-3 is replaced with Facilities D&D Project.
4) CRU-4 is replaced with Fernald Residues Vitrification Plant Project.
5) CRU-5 is replaced with Aquifer Restoration Project.

("Operable Unit" or "OU" still refers to the physical elements of the FEMP.)

4.0 Package I Contents

4.1 Plant Facilities Design Criteria Package

The Design Criteria Document, Revision 1 (FERMCO 1996a) is the controlling element of the Plant Facilities Design Criteria Package. It summarizes the specific criteria which affect the design including all pertinent DOE Orders, engineering design codes, standards, and requirements. It relates how the various elements of the Conceptual Design of the remediation plan and facilities address the ARARs and To Be Considered requirements. The document includes a summary of the results of studies, reports, and/or evaluations in support of the design and a synopsis of the engineering tests (Appendix C). (The actual test data are included in other documents.) Status and results of value engineering studies performed since the Preliminary Design (submitted October 1995) are also included in Appendix C.

4.1.1 Changes from Design Criteria Document, Revision 0

This document now includes the results of physical property and other tests performed at the site or on OU1 materials that were not available for the Preliminary Design Package (submitted October 1995). Major changes reflect progress in detailed design and all of the issues listed in Subsection 3.1. (A summary of the design changes due to the Value Engineering Studies is included in Appendix C). A new Appendix B has been added to include a permitting "crosswalk" (the old Appendix B is now Appendix C) and a new Appendix D has been added to include Dryer Off-gas stack limits. Some of the subsections in Sections 1 and 2 have also been rearranged. Other changes involve responses to US EPA and Ohio EPA comments.

4.2 Plant Facilities Engineering

The Plant Facilities Engineering package contains a description of the operation and process used to treat waste and handle wastewater. This provides the basis for the preliminary design. Discussion of the material handling concepts is included in the Process Description and the Excavation Plan (Package II).

4.2.1 Process Description

The Process Description, Revision F (PARSONS 1996i) describes the operations to handle and treat the waste, and handle the wastewater, as shown on the Process Flow Diagrams (PFDs). It provides an explanation of the processes shown on the PFDs including a reference to the appropriate stream numbers. (Revisions D and E were issued during internal review cycles and have been superseded.)

4.2.1.1 Changes from Process Description, Revision C

The major technical changes to this document involve additional design detail and revisions to waste preparation material handling. These revisions include deletion of the trommel screen (now considered as future equipment) and incorporation of a metal detector and magnetic belt conveyor for removing ferrous and non-ferrous metal, respectively. Additional detail on the water balances has been included in Section 7. The document also reflects the off-site disposal of all debris, changes in sampling and stockpile strategies, and elimination of one railcar bay.

4.2.2 Control Philosophy

The Control Philosophy, Revision F (PARSONS 1996b) covers the general operating and control philosophy for the remediation facility on a system-by-system basis as shown on the PFDs.

4.2.2.1 Changes from Control Philosophy, Revision C

Major technical changes to this document involve additional design detail and updates to waste preparation as described in Subsection 4.2.1.1 Other changes involve responses to US EPA and Ohio EPA comments. The document also reflects the changes in sampling and stockpile strategies discussed in Subsection 3.1. (Revisions D and E were issued during internal review cycles and have been superseded.)

4.2.3 Mass and Energy Balances

The Mass and Energy Balances for all of the pits are included in this section as stand-alone tables that are organized to follow the PFDs. Weekly mass balance summary sheets are also included for each waste pit.

Note: The mass balances and process designs are based on the physical property data for the pit waste available January 22, 1996. It does not, at this time, reflect the revised loadout rates discussed in Subsection 3.1.

4.2.3.1 Changes from Preliminary Design Package

The Mass and Energy Balances for all of the pits have been developed and are included (versus the Preliminary Design Packages, where only Pit 6 Mass and Energy Balances were provided). Physical property data have been updated based on DEEP data.

4.2.4 Process Flow Diagrams

PFDs are included for waste retrieval, waste preparation, drying and off-gas treatment, dried waste blending and loadout, and overall water balance. The sketches included in the package are:

Drawing No.	Process	Revision	Date
SK-F-03909	Waste Retrieval	E	3/20/96
SK-F-03910	Waste Preparation	G	3/20/96
SK-F-03911	Drying and Off-Gas Treatment Sheet 1 of 2	E	3/20/96
SK-F-03956	Drying and Off-Gas Treatment Sheet 2 of 2	D	3/20/96
SK-F-03913	Dried Waste Blending & Loadout	F	3/20/96
SK-F-04084	(Block Flow Diagram) OU1 Water Balance	C	3/20/96

4.2.4.1 Changes from Process Flow Diagrams in Preliminary Design Package

The drawings have been updated to include additional design detail and process evolution. Drawing SK-F-03912 has been replaced by Drawing SK-F-03956, and reflects changes to the off-gas treatment system. A new drawing, SK-F-04084, has been added to schematically show the overall water balance. Reduction of the interim stockpile sizes, elimination of on-site debris disposal, the new sampling strategy, as discussed in Subsection 3.1, and waste preparation changes as described in Subsection 4.2.1.1 are also incorporated in these revisions.

4.2.5 Equipment List

The Equipment List (Revision F) currently provides a listing of the equipment associated with the process used to treat the waste.

4.2.5.1 Changes from Equipment List, Revision C

The list has been revised to reflect the current design and additional design detail. Sizes/capacities of several pieces of equipment were reduced due to the reduced loadout rates discussed in Subsection 3.1. A separate list of equipment for future expansion has been added. (Revisions D and E were issued during internal review cycles and have been superseded.)

4.2.6 General Arrangement Drawings

Civil overviews (site plan and utility plan), as well as material handling general arrangement plans and sections are included for the pit waste remediation area, waste preparation area, the drying facility, and the blending and rail loadout facility.

Drawing No.	Title	Revision	Date
SK-G-04164	Civil Preliminary Site Plan	B	03/20/96
SK-G-04165	Civil Preliminary Utility Plan	B	03/20/96
SK-M-03916	Materials Handling General Arrangement Plan Pit Waste Remediation Facility	E	03/20/96
SK-M-03917	Materials Handling Plan Waste Preparation Area	E	03/20/96
SK-M-03918	Material Handling Sections Waste Preparation Area	E	03/20/96
SK-M-03919	Material Handling Plan Drying Facility	E	03/20/96
SK-M-03920	Material Handling Sections- Drying Facility	E	03/20/96
SK-M-03921	Material Handling Plan Blending & Rail Loadout Facility	E	03/20/96
SK-M-03922	Material Handling Sections Blending & Rail Loadout Facility	E	03/20/96

4.2.6.1 Changes from General Arrangement Drawings in the Preliminary Design Package

The drawings have been revised to include additional design detail and the current physical arrangements. This includes reduction of the remedial facilities waste preparation and blending/loadout area sizes through reduced stockpile sizes and elimination of one railcar bay as discussed in Subsection 3.1. Other design factors discussed in Subsection 3.1 that are reflected in the drawings include the reduced loadout rate, elimination of the final car wash building, and building features such as rainbreaks and building column spacing.

4.3 Site Improvement Plan

4.3.1 Description of Site Preparation Activities

The Site Improvement Plan (SIP) comprises the drawings and specifications for the initial civil improvements necessary to prepare the site for the construction and operation of the OU1 treatment system. This initial civil work is primarily site grading and stormwater control-related work. The plan includes a general description of the site preparation activities and the following technical documents. Additional civil, structural, and architectural work associated with building construction, etc., will be detailed in future packages.

The drawings and specifications included in this package were issued Certified for Construction, Revision 0, on February 14, 1996.

The site preparation drawings presented have subsequently been revised and are currently undergoing a final review before reissue for construction as Revision 1. Revision 1 will reflect changes made in the processing facilities as a result of value engineering studies. Specifications did not change and were used to purchase materials to start construction on April 4.

Revision 0 drawings are included in this package to avoid issuing unchecked drawings. Revision 1 will be issued as a supplement to this pre-final design package.

4.3.2 Civil Site Plan

These drawings depict the general improvements to the site including: site clearing, utility and monitoring wells removal, access roads, stormwater management pond and 100-year storm spillway, and the embankment for the new rail spur. The warehouse, changeout facility, diesel fuel station, and other associated improvements, along with remaining OU1 remedial facilities are also shown, but not included in the initial design work.

4.3.2.1 Changes from Civil Site Plan, Revision B

Additional design detail, including underground utilities to be demolished, has been added.

4.3.3 Civil Utility Plan

This drawing shows the location of subsurface utilities.

4.3.3.1 Changes from Civil Utility Plan Drawings in the Preliminary Design Package

The underground utility profiles have been added and additional design details have been incorporated.

4.3.4 Civil Grading Plan

These two drawings show the grading for the waste process area, berms, future railroad tracks, and the stormwater management pond and culverts. Section drawings are also included.

4.3.4.1 Changes from Civil Grading Plan Drawings in the Preliminary Design Package

Additional design detail, including final stormwater drainage, retaining walls, and catch basins, has been added.

4.3.5 Civil Utility Profiles and Civil Details

These drawings show the profiles of subsurface utilities and civil details such as the pump station and underground tie-ins.

4.3.5.1 Changes from Drawings in the Preliminary Design

These drawings were not available in the Preliminary Design Package.

4.3.6 Civil Specifications

The following construction specification sections are included:

1) Section 01010 - General Requirements
2) Section 01011 - Submittals

3) Section 01012 - Schedule of Drawings
4) Section 02110 - Site Clearing
5) Section 02200 - Earthwork
6) Section 02270 - Erosion Control
7) Section 02300 - Boring and Jacking
8) Section 02667 - Site Water Lines
9) Section 02713 - Detention Pond Liner Geomembrane
10) Section 02720 - Site Drainage
11) Section 02733 - Pump Station
12) Section 02831 - Chain Link Fences
13) Section 02900 - Soil Preparation and Seeding
14) Section 03001 - Concrete

4.3.6.1 Changes from Civil Specifications in the Preliminary Design Package

The specifications have been revised as necessary to meet the current design requirements. The asphaltic concrete paving specification (Section 02510) has been deleted. The General Requirements section, Submittals section, and Concrete section have been added. Other changes involve responses to US EPA and Ohio EPA comments.

4.3.7 Utility Requirements

This document (PARSONS 1996g) is a description of the utilities required to support the waste treatment process.

4.3.7.1 Changes from Utility Requirements, Revision C

The document has been revised to reflect the current design. It incorporates additional water balance information, equipment related changes, and changes to the firewater system discussed in Subsection 3.1.

4.3.8 Description of On-Site Rail Improvements

This document (PARSONS 1996f) describes the rail upgrades and construction required to support the shipment of treated waste. It includes the logistics associated with receiving, loading, storing, and moving of full and empty rail cars.

4.3.8.1 Changes from Design of On-Site Rail Improvements in the Preliminary Design Package

The document has been updated to reflect the current design. Significant technical changes include relocation of the railyard north of existing Tracks 1 and 2 to facilitate Soil Remediation Project work and the removal of the radiological control point and final car wash building (on the north track) as discussed in Subsection 3.1. Other changes discussed in Subsection 3.1 that affected the document include the reduced loadout rate, changes in sampling strategy, and elimination of one railcar bay. The title of the document has also been corrected to more accurately reflect its contents.

4.3.9 Off-Site Rail Upgrades

This document (FERMCO 1995) describes the work to be performed by CSX to repair or upgrade the rail, switches, trestles, and culverts and other features from the FEMP to Cottage Grove, Indiana.

No changes were required for this document as presented in the Preliminary Design Package.

4.4 Equipment Specifications

Performance specifications are included for the major equipment items noted below. These specifications are being used to competitively procure items requiring longer lead fabrication/procurement times.

4.4.1 Shredder

The Debris and Process Shredder Performance Specification, Revision D (PARSONS 1996e) includes the motor and basic electrical materials and methods specification. This document has been finalized for procurement.

4.4.1.1 Changes from Shredder Performance Specification, Revision A

The specification has been updated to cover both a debris shredder and a process shredder. Other changes involve response to US EPA and Ohio EPA comments. It reflects the reduced loadout rate and revised fire protection philosophy discussed in Subsection 3.1.

4.4.2 Indirect Dryer

The Indirect Dryer Performance Specification (PARSONS 1996h) includes the specifications for the dryer, motor, electrical materials, piping, pipe supports, and insulation. This document has been finalized for procurement.

4.4.2.1 Changes from Indirect Dryer Performance Specification, Revision A

The specification has been revised based on system design modifications as well as vendor, US EPA, and Ohio EPA comments. None of the changes discussed in Subsection 3.1 affected this document.

4.4.3 Off-Gas Treatment System

A description of the Basis of the Off-Gas Treatment System (PARSONS 1996a) and draft specifications included the following specifications (these specifications are currently being finalized for procurement):

1) Section 01010 - General Requirements
2) Section 11501 - Scrubber System
3) Section 13205 - Tanks and Immersion Heaters
4) Section 14570 - Rotary Airlock Feeders
5) Section 15060 - Pipe, Fittings, Valves, and Accessories
6) Section 15090 - Piping Supports and Anchors
7) Section 15160 - Pumps
8) Section 15173 - Motors for Off-Gas Treatment System
9) Section 15250 - Insulation
10) Section 15755 - Heat Exchangers
11) Section 15860 - Fans
12) Section 15883 - Cyclone
13) Section 15885 - Air Cleaning Devices
14) Section 15890 - Ductwork
15) Section 16053 - Basic Electrical Materials and Methods for Off-Gas Treatment System
16) Section 16170 - Grounding and Bonding for Off-Gas Treatment System
17) Section 16856 - Heating Cables and Panel for Off-Gas Treatment System

4.4.3.1 Changes from Off-Gas Treatment System Presented in Preliminary Design Package

The preliminary design package included generic specifications for the types of equipment included in the conceptual off-gas system design. The current package includes specifications which are being

finalized for procurement. These specifications now reflect, in detail, the system depicted on the revised PFDs. For example, the specifications include material requirements, design conditions (flows, temperatures, and pressures), and, in many cases, dimensional details. Specifications are also included for ancillary equipment which is not in direct contact with the off-gas, but which will be procured together with the skid-mounted off-gas system due to its proximity to the off-gas equipment. This ancillary equipment includes the wastewater, condensate, and caustic tanks and pumps.

4.4.4 Waste Loadout System

The Waste Loadout System, Revision C, (PARSONS 1996d) description is included. The equipment associated with this system is standard equipment that is readily available and will be specified individually. Thus, there is no "Total System" specification.

4.4.4.1 Changes from Waste Loadout System Description in Preliminary Design Package

Significant technical changes were made to this document, including changing the sampling strategy and thereby reducing the railcar holding period to 24 hours as discussed in Subsection 3.1. Also, the stockpile size reduction and elimination of one of the four railcar loading stations as discussed in Subsection 3.1 are reflected in this document.

4.5 Construction Schedule (March 1, 1996)

The construction schedule shows all of the construction elements required to initiate operation of the OU1 Remediation Facility. A 10-Year Plan has been developed by the DOE which describes an approach for the remediation of the FEMP within an overall 10-year period commencing in Fiscal Year (FY) 1996 and ending in FY2005. The projected completion date for the remediation of OU1 by the second quarter of FY2005 is consistent with the 10-Year Plan.

The major elements addressed are:

1) Off-site upgrade of the FEMP to Cottage Grove branch rail line

2) On-site infrastructure development associated with the storage, maintenance, and logistics of railcar management on the site

3) Construction of the treatment facilities (dryer, shredder, material handling facilities, etc.)

4) Site preparation activities

The schedule only addresses development of the first phase of remediation facilities for OU1.

Phase I features single dryer operation with a nominal processing rate capacity of 22 tons per hour. Although the 10-Year Plan envisions the operation of a second dryer in FY2001, the need for this has not yet been established. The design provides space for installation of the additional capacity, although the activities required to install the additional capacity are not shown on this construction schedule.

4.5.1 Changes from Construction Schedule in the Preliminary Design Package

The document has been updated to reflect the Alternative Remedial Action Subcontracting Approach (ARASA). The *Amendment to the Remedial Action Work Plan* (ARDWP) attached to the letter of transmittal of the Pre-Final Design Package provides an explanation of the ARASA that the DOE now plans to use for remediation of OU1. It further provides a discussion of how the various sections of this Pre-Final Design Package will be applied to the ARASA.

5.0 Package II Contents

5.1 Waste Excavation Plan

The Waste Excavation Plan, Revision F (PARSONS 1996j) includes a description and evaluation of the waste excavation method and transfer to the processing facility. It addresses stormwater management, monitoring, dust and fugitive emissions control, and sequencing of the excavations. Drawings and sections are included that depict the excavation method for Pits 3 and 5. It also includes a discussion of coordination among the various other FEMP projects, for issues of soils disposal and debris management.

5.1.1 Changes from Waste Excavation Plan, Revision C

This document now includes the results of physical property and other tests performed at the site or on OU1 materials that were not available in Revision C. It has been updated in response to US EPA and Ohio EPA comments and to reflect the current design. The Materials Management Plan (Appendix A) has been revised to show that no debris originating from the pits will be sent to on-site disposal (as discussed in Subsection 3.1). It also reflects a more integrated, sitewide approach to materials management.

5.2 Technical Summary of DEEP Test Data

The Technical Summary of Dewatering, Excavation, and Extraction Process (DEEP) Test Data (PARSONS 1996c) presents a summary of all information from the DEEP tests planned and conducted to determine waste pit material geotechnical properties. The Excavation Plan incorporates waste strength

properties. Basic geotechnical properties for moisture content and density are used in the mass balances. There is also a discussion of dewatering results that could bear on waste drying requirements.

5.2.1 Changes from Preliminary Technical Summary of DEEP Test Data, Revision A

The document has been updated with results of the test work performed by the University of Cincinnati and confirmatory tests by an independent laboratory for Waste Pits 1, 2, 3, 5, and 6. Additional data are also presented for Waste Pits 4, 5, and 6, the Burn Pit, and the Clearwell.

5.3 Transportation and Disposal Plan

The Transportation and Disposal Plan, Revision F (FERMCO 1996b), describes the logistics of rail transportation, and provides objectives and criteria to be implemented in the detailed design phase. This plan highlights operational aspects of waste transportation to demonstrate that wastes can be transported safely in accordance with all applicable regulations.

5.3.1 Changes from Transportation and Disposal Plan, Revision C

As discussed in Subsection 3.1, the Final Wash Building Facility and Railcar/Locomotive Maintenance Building has been eliminated and the on-site railyard has been repositioned to the north side of Tracks 1 and 2 to coordinate with site requirements of the Soil Remediation Project. Track 14 is now double-ended, which allows for faster transferring of cars onto or from the analytical hold area.

6.0 US AND OHIO EPA COMMENT RESOLUTIONS

The US EPA and Ohio EPA reviewed the Operable Unit 1 Remedial Design Preliminary Design Packages during October 1995 and provided comments to DOE/FERMCO. DOE/FERMCO responded to these comments and proposed actions to be incorporated into the Pre-final Design Packages. Appendix A presents the US EPA and Ohio EPA comments, DOE/FERMCO's responses and proposed actions, and references as to where the actions can be found in the revised Pre-final Design Packages.

7.0 REFERENCES

(DOE 1994) United States Department of Energy, 1994. *Remedial Investigation Report for Operable Unit 1.* Fernald: DOE Fernald Field Office.

(DOE 1995a) ----------, March 1995. *Record of Decision for Remedial Actions at Operable Unit 1.* Fernald: DOE Fernald Field Office.

(DOE 1995b) ----------, July 1995. *Final Remediation Design Work Plan for Remedial Actions at Operable Unit 1.* Fernald: DOE Fernald Field Office.

(DOE 1995c) DOE Proposal for Integration of Sitewide Planning (submitted to the US EPA and Ohio EPA by letter of August 18, 1995). Cincinnati, Ohio.

(FERMCO 1995) ---------, October 1995. *Letter Report: Off-Site Rail Upgrades,* Revision A. Fernald: FERMCO.

(FERMCO 1996a) Fernald Environmental Restoration Management Corporation, March 1996. *Design Criteria Document for the Operable Unit 1 Remediation System Design,* Revision 1. Fernald: FERMCO.

(FERMCO 1996b) ----------, March 1996. *Transportation and Disposal Plan*, Revision F. Fernald: FERMCO.

(PARSONS 1996a) PARSONS ERA Project, March 1996. *Basis of Off-Gas Treatment System*, Revision B. Cincinnati: PARSONS.

(PARSONS 1996b) ---------, February 1996. *Control Philosophy for the Remediation System Design*, Revision F. Cincinnati: PARSONS.

(PARSONS 1996c) ----------, February 1996. *Technical Summary of DEEP Test Data,* Revision 0. Cincinnati: PARSONS.

(PARSONS 1996d) ----------, February 1996. *Waste Loadout System*, Revision C. Cincinnati: PARSONS.

(PARSONS 1996e) ---------, March 1996. *Debris and Process Shredder Performance Specification,* Revision D. Cincinnati: PARSONS.

(PARSONS 1996f) ---------, March 1996. *Description of On-Site Rail Improvements,* Revision C. Cincinnati: PARSONS.

(PARSONS 1996g) ---------, March 1996. *Estimate of Utility Requirements for Proposed Remedial Facilities for OU1 Remediation.* Revision F. Cincinnati: PARSONS.

(PARSONS 1996h) ---------, March 1996. *Indirect Dryer Performance Specification.* Revision C. Cincinnati: PARSONS.

(PARSONS 1996i) ---------, March 1996. *Process Description for the Remediation System Design,* Revision F. Cincinnati: PARSONS.

(PARSONS 1996j) ---------, March 1996. *Waste Excavation Plan for the Operable Unit 1 Remediation System Design,* Revision F. Cincinnati: PARSONS.

APPENDIX A

RESPONSE TO US EPA AND OHIO EPA COMMENTS ON THE OU1 REMEDIAL DESIGN PRELIMINARY DESIGN PACKAGES, I AND II

2038

Response to US EPA/ Ohio EPA
Comments on the OU1 Remedial Design
Preliminary Design Packages, I and II

The comment response document transmitted to the US EPA/Ohio EPA, dated January 1996, has been revised to provide a reference indicating the part of this Pre-Final Design Package where the response and action have been incorporated.

GENERAL COMMENTS

Materials Management Plan

1) Commenting Organization: US EPA Commentor: Saric
Section #: NA Page #: NA Line #: NA

Comment: The materials management plan provides a strategy for handling all of the material removed from operable unit 1 (OU1), both material that will be sent to an off-site disposal facility and to the on-site disposal cell. The handling of the material to be sent from OU1 to the on-site disposal cell will be coordinated along with the movement of material from other OUs that will be placed in the on-site disposal cell. Interim storage of OU1 material and the coordination of its transport with other OUs should be provided in the materials management plan.

Response: Agree. Activities associated with the transfer, storage, and placement of any OU1 soils in the on-site disposal facility (OSDF) will be coordinated with those from other FEMP remediation projects, first under the guidance of Revision 3 of the Removal Action 17 (RA17) Work Plan, and then under the guidance of remedial planning documents developed through the Soil Remediation Project. The only OU1 soils which would most likely be handled under Rev. 3 of the RA17 Work Plan are soils removed during initial site preparation activities. In accordance with Rev. 3 of the RA17 Work Plan, these OU1 soils will be managed with soils from other projects destined for on-property disposal, including potential management in a single central staging area.

Once the Soil Remediation Project remedial planning documents are approved relative to material handling for the OSDF, any subsequent OU1 activities which result in the generation of soils which can be placed into the on-site facility will be performed in a coordinated site-wide manner in accordance with these documents. Within the OU1 remediation facilities, various storage piles have been identified for soils, representing feed piles in support of treatment and blending, primarily for eventual loading into railcars for shipment for off-site

disposal. Those OU1 soils destined for the OSDF will be segregated and managed in one of these areas, as necessary, to effect a coordinated transfer to the Soil Remediation Project for placement in the OSDF.

As discussed in the response to Ohio EPA Comment #25, no efforts will be made to place any debris from the OU1 waste pit processing activities in the OSDF.

Action: The Materials Management Plan is being revised to ensure that discussions therein reflect this coordinated site-wide effort on the handling of soils destined for placement in the OSDF. This revision will be provided with the March 21, 1996, Pre-final Design Packages. It is important to note, however, that in order to continue to be effective as a planning tool, the Materials Management Plan most probably will require further updating beyond that submittal (e.g., to reflect the specifics of the Soil Remediation Project remedial planning documents).

Reference: The Materials Management Plan was extensively revised. See page A-1 starting at line 23 for an example of the revisions in response to this comment.

Excavation Plan

2) Commenting Organization: US EPA Commentor: Saric
Section #: NA Page #: NA Line #: NA
Comment: The excavation plan contains many assumptions, which at times are conflicting and confusing. Each time a design assumption is made on the basis of available data and a specific action is planned, a contingency is provided for by stating that if the planned action does not work, then other actions may become necessary and will be decided or designed later.

It is recognized that the overall excavation plan is complicated and all contingencies cannot be addressed; however, the plan appears to rely on many actions that will be designed later, and does not provide adequate alternatives. The main concern with this approach is that significant delays may occur in implementing the remedial action when new alternatives need to be designed.

Response: Comment Acknowledged. Due to the heterogeneity of the waste pits and based on the lessons learned from the DEEP project, maintaining a fixed schedule for the implementation of a defined mining plan could be accompanied by opportunities for delay resulting from the possibility of changed field conditions.

The Excavation Plan identifies potential concerns and identifies field responses when such difficulties arise.

As presented in the Excavation Plan, primary reliance is placed upon conventional excavation equipment to conduct the excavation. Upon encounter of an area within the pits where the use of conventional equipment is infeasible, the excavation would shift to another area within the same pit or to another pit in order to continue the overall excavation. As a contingency, excavation of the waste pits by slurrying is also presented.

If, based on experience in conducting excavation, a significant portion of one or more pits is ascertained to be excavable only through slurry pumping, this equipment will be procured and installed. The pre-final design for the OU1 plant includes space for the future installation of slurry handling equipment.

However, given the current state of knowledge of the OU1 waste, there would be a very low probability of incurring a significant delay in the excavation due to the lack of alternative opportunities within the same pit or of another pit, for the application of conventional excavation.

Action: The Excavation Plan will be revised for the Pre-final Design Packages to clarify the excavation techniques to be used and when they will be implemented. It will also emphasize that the planned excavation will allow for prompt changes to be implemented without the need to stop excavation and redesign.

Reference: See the Waste Excavation Plan page 1-1 lines 32-36 and page 5-3 lines 1-4 for the incorporation of this comment.

3) Commenting Organization: US EPA Commentor: Saric

Section #: 1-1 Page #: 1-1 Line #: 16 and 17

Comment: The text states that "equipment operations are not planned or anticipated to occur on pit wastes." It further states that "operations will be from on top of pit caps, on the pit bottoms..." These statements need further clarification. It does not seem possible that pits can be excavated without operations being conducted on top of or in the pit.

Response: Comment Acknowledged. DOE is currently planning to excavate the waste pits with mechanical excavation equipment located in two areas; the waste pit cover and the waste pit liner. At each of these points, the cover and the liner, a long reach backhoe will be utilized to remove waste from the waste excavation face.

This technique is referred to as the "top and bottom" excavation approach mentioned in the Excavation Plan; with the "top" being cover material, not pit wastes; and the "bottom" being the waste pit liner not pit wastes. This approach was devised to eliminate the need for the operators to drive on waste of unknown strength, thereby eliminating safety concerns for the mechanical equipment operators.

Action: The Excavation Plan will be revised for the Pre-final Design Packages to better describe the "top and bottom" approach for excavating pit wastes.

Reference: See the Waste Excavation Plan page 1-1 lines 20-26 and Section 5.2 for the incorporation of this comment.

4) Commenting Organization: US EPA Commentor: Saric

Section #: 1-2 Page #: 1-1 Line #: 25 through 38

Comment: The text states that the excavation to be conducted in Pits 1, 2, 4, and in the Burn Pit will be similar to that conducted in Pit 3. This statement appears to be contradictory because Pit 3 is a wet pit, which will most likely require hydraulic excavation. Pits 1, 2, 4, and the Burn Pit are dry pits and mechanical excavation is planned for the dry pits. This apparent contradiction should be resolved and the text revised accordingly.

Response: Comment Acknowledged. All of the waste pits (including Waste Pits 3 and 5) are currently planned to be excavated with mechanical equipment. If attempts to mechanically excavate wastes are unsuccessful, slurrying the wastes will be undertaken. This should allow excavation to proceed with no excavation down time.

Action: The Excavation Plan will be revised for the Pre-final Design Packages, to clarify, as necessary, that the current plan is to mechanically excavate all pit waste.

Reference: See the Waste Excavation Plan page 1-1 lines 32-36 and page 5-3 line 1.

5) Commenting Organization: US EPA Commentor: Saric

Conceptual Drawings Drawings No.: 91X-5900-G-00133 and 91X-5900-G-0015A

Section #: NA Page #: NA Line #: NA

Comment: Activities for plan phases 1, 2, 3, and 4 are shown in Drawing 00133, which relates to Pits 1, 2, and 3. These phases contradict the activities for phases 1 and 2 shown in Drawing 0015A, which relates to Pits 5 and 6. This apparent contradiction should be resolved by correctly renumbering the phases.

Response: Comment Acknowledged. The phases shown on Drawing 00133 are specific to excavation activities planned for Pits 1, 2, and 3, with a description of these phases provided in Section 5.2.1 of the Excavation Plan. Similarly, the phases shown on Drawing 0015A are specific to activities planned for Pits 5 and 6. There is no direct relationship between these phases (e.g., Phase 1 for Pits 1, 2, and 3 and Phase I for Pits 5 and 6), rather it is merely reflective of the use of the same nomenclature.

Action: Section 5.2.2 will be revised for the Pre-final Design Packages to reflect a referencing of the sequence discussion with the phases reflected on Drawing 0015A.

Reference: The Waste Excavation Plan Section 3, page 3-1, lines 10-12 were revised to clarify the phases shown on the drawings.

Specifications

6) Commenting Organization: US EPA Commentor: Saric

Section #: NA Page #: NA Line #: NA

Comment: The specifications for the dryer and shredder are presented in different formats and will require the bid evaluations of these major items of equipment to be carried out differently. The dryer specification is a typical performance specification. US EPA recommends that the shredder specification also be written as a performance specification.

Response: Comment Acknowledged. The heterogeneous nature of the waste material requires a wide degree of flexibility, so a strict duty or performance specification format describing the desired performance was selected for procurement of the shredder. Minimum essential requirements are stated in Section 2.1 and 2.2. The specification has refrained from being too detailed in order to allow different bidders to bid their standard equipment. It was expected that a more specific

definition was required for dryer fabrication and a more detailed specification was written.

Action: No additional action required.

SPECIFIC COMMENTS

7) Commenting Organization: US EPA Commentor: Saric
Section #: 13652 Page #: 4 of 23 Line #: 20 through 23

Comment: The text should specify the type of sensors to be used and how the fire suppression system will be activated. The text also should specify if the system is to be activated automatically or manually.

Response: Agree. At this time, the type of sensor and fire suppression system to be used is not yet fully developed.

Action: The Pre-final Design Packages will address these questions in detail.

Reference: The requirement for fire suppression in the shredder has been eliminated.

8) Commenting Organization: US EPA Commentor: Saric
Section #: 13652 Page #: 5 of 23 Line #: 8 through 10

Comment: A manufacturer cannot design instrumentation and controls for the shredder when details about the system operation are not specified. The text should be revised to include this information.

Response: Agree. The debris shredder will be used to process large debris greater than 12 inches in any dimension. The process shredder system will be used to size reduce all waste and debris (less than 12 inches size) to a 4 inch size in any direction to provide feed for the dryer. These systems will be stand alone with both local and remote controls and instrumentation. Both shredders will be interlocked with the rest of the material handling system for starting, stopping, and emergency alarms. The minimum requirements for the instrumentation and control system are sufficiently described in Section 2.1.F, Page 15 of 23, of the new shredder specification.

Action: The specification has been clarified. Two shredder systems will be provided in the Pre-final Design Package Specification.

Reference: Specification Section 13652 has been completely re-written. See Section 13652 1.4.A on page 2 of 30 and 1.4.B on page 4 of 30.

9) Commenting Organization: US EPA Commentor: Saric
Section #: 13652 Page #: 5 of 23 Line #: 14 through 19

Comment: If the bids for the shredder will be evaluated based on price (that is, low bid), then manufacturers will not volunteer additional "optional equipment" because it will increase their bids. The specifications should therefore clearly specify all minimum requirements, accessories, and auxiliary equipment, as required. All these minimum requirements should be specified so that all bidders are consistently providing bids on the same items.

Response: Agree. The specification has been revised to clarify minimum requirements. Also, the shredders will not be evaluated on price alone. A technical evaluation plan and a technical evaluation method for both the shredder systems has been prepared. The evaluation shall include technical as well as commercial assessment of bids. The successful bidder will be selected based on the results of both of these evaluations. Bidders will be encouraged to offer alternate proposals, provided they also submit a proposal meeting the minimum requirements.

This specification has been written as a performance specification to allow flexibility to the bidders to meet a certain performance criteria. The minimum essential requirements are stated in Sections 2.1 and 2.2.

Action: The revised shredder specification will be included with the Pre-final Design Packages.

Reference: Part 2 of Specification Section 13652 starting on page 14 of 30 has been re-written to provide the requested information. Note that the "option" mentioned in the original comment remains; all bidders must bid on the option.

10) Commenting Organization: US EPA Commentor: Saric
Section #: 13652 Page #: 9 of 23 Line #: 22 and 23

Comment: In addition to conducting shop testing, a field test should also be performed. The field test will evaluate the efficiency of the machine in the field on the actual material to be processed. This testing will demonstrate the field reliability of the shredder.

Response: Comment Acknowledged. The shredder(s) will be tested in the shop to verify operability before shipment. A field acceptance test will be run to verify that the installed equipment meets the performance requirements which have been specified in the revised specification, Section 13652, article 2.4, before payment of the vendor. Actual material to be processed will vary widely due to the heterogeneous nature of the waste pits. Flexibility of the shredder is considered more important than efficiency. The specified field acceptance test requirements will demonstrate this flexibility. Reliability of the shredder can only be demonstrated by extended (several months) operating experience. The storage pile between the two-stage process shredder (which now will provide dryer feed material as indicated in response to USEPA comment 8) and the dryer, will enhance operating reliability of the remediation facility.

Action: The revised shredder specification will be included with the Pre-final Design Packages.

Reference: The field acceptance test is specified in Specification Section 13652 Part 3.4.B, page 29 of 30. Shop performance testing is specified in Part 2.4.D starting on page 25 of 30.

11) Commenting Organization: US EPA Commentor: Saric

Section #: 13652 Page #: 12 of 23 Line #: 23 and 24

Comment: In addition to stating the pressure of available water and high pressure(HP) air, the text should also specify the available volume of water and HP air at that pressure. Provisions should also be included in the event that the machine will require a higher volume of water and air or higher pressure.

Response: Comment Acknowledged. Air and water will be supplied as required for the shredder systems. Utility requirement information will be supplied by the equipment vendor. The information in Section 1.9.F is for reference only. Please note that shredder systems do not typically require air and water for continuous operations. These utilities are normally required intermittently for clean up and maintenance.

Action: Section 1.9.F will be identified as "for reference only" in the revised specification for the Pre-final Design Packages.

Reference: The revised section 1.9.F can be found on page 13 of 30, line 33.

12) Commenting Organization: US EPA Commentor: Saric

Section #: 13652 Page #: 13 of 23 Line #: 12 through 14

Comment: The text states that the material will be dropped into the shredder feed hopper from a height of 7 feet. However, the test does not specify the maximum weight of the material and the operational status of the shredder (that is, stopped or operating at full speed) while the material is dropped into the hopper. These details should be specified to permit the manufacturer to properly bid on this piece of equipment.

Response: Comment Acknowledged.

Action: The specification will be revised for the Pre-final Design Packages to indicate that the shredder must be capable of having the material dropped into the system from a height of one foot above the hopper when the shredder is operating at full speed. A 1000 pound maximum drop weight should be used for the test.

Reference: The specification requirement may be found in Part 2.1.A.1.h. on page 15 of 30, line 17. note that the free fall requirement is seven feet, not one foot. The test requirement may be found in Section 2.4.D.1.c on page 25 of 30 line 33.

13) Commenting Organization: US EPA Commentor: Saric

Section #: 13652 Page #: 16 of 23 Line #: 10 through 20

Comment: The text does not state in what manner fire will be detected in the shredder. The specification needs to include information regarding how fire will be detected and whether the fire suppression system will be activated automatically.

Response: Agree. At this time, the type of sensor and fire suppression system to be used is not yet fully developed.

Action: The Pre-final Design Packages will address these questions in detail.

Reference: The requirement for fire suppression has been deleted from Specification 13652.

Site Preparation Activities

14) Commenting Organization: US EPA Commentor: Saric
Section #: Soil Grading Plan Page #: NA Line #: NA (Two sheets)

Comment: The soil grading plans indicate the contours of the proposed berms for the storm water management pond and the proposed railroad tracks. In order to evaluate the total site drainage, the plans should also show the contours for the proposed roads and other paved areas.

Response: Agree.

Action: The contours for the remaining areas, including proposed roads and the other paved areas will be included in drawings 91X-5900-G-000136 and 91X-5900-G-000137 in the Pre-final Design Packages.

Reference: The contours for the areas around the roads and other paved areas have been included in drawings G-000136 and G-000137 in the Civil Grading Plan.

Site Preparation Plans

15) Commenting Organization: US EPA Commentor: Saric
Section #: Civil Details-Miscellaneous Page #: NA Line #: NA Sheet 3 of 4, Detail 2

Comment: This detail shows a cross-sectional drawing for a gravel road. In order to assist the contractor in bidding for the project, the required thickness and depth of the aggregate should be shown on the site plan, where appropriate.

Response: Agree.

Action: The thickness and depth of the aggregate for the gravel road will be included in Civil Details drawing 91X-5900-G-000145 on the Pre-final Design Packages.

Reference: This information has been included in Civil Details Sheet 3 of 6, drawing G-00145.

16) Commenting Organization: US EPA Commentor: Saric
Section #: Civil Utility Plan Page #: NA Line #: NA

Comment: The civil utility plan indicates that an existing 30-inch-diameter reinforced concrete pipe is to be removed from under the existing railroad tracks. However, the civil grading plan (sheet 1 of 2) indicates that this reinforced concrete pipe is to be abandoned and plugged in place under the tracks. Also,

the civil grading plan shows both headwalls are to be removed. This inconsistency should be corrected and the plans revised accordingly.

Response: Agree.

Action: The civil utility plan will be corrected to show that the existing 30" diameter reinforced concrete pipe under the railroad tracks will only be partially removed with the remaining 30" pipe plugged in place. The correction will be included in the Pre-final Design Packages. The civil grading plan correctly shows that the headwalls are to be removed.

Reference: This information is shown on the civil site plan/demolition plan, drawing G-00135. The civil site utility plan (G-00141) and grading plan (G-00136) have been revised to be consistent with the site plan/demolition plan.

RESPONSE TO OHIO EPA COMMENTS ON THE OU1 REMEDIAL DESIGN PRELIMINARY DESIGN PACKAGES, I AND II

1) Commenting Organization: Ohio EPA Commentor: DSW
Section #: General Page #: Line #: Code M
Original Comment #:
Comment: In a previous document (OU1 FS) statements were made which indicated that Sloan's crayfish would be able to re-establish after any short-term impacts from increased sediment loads during remediation activities (G-2-14). This may not be true. In addition to Sloan's crayfish, the locations that would be impacted by remedial activities contain populations of *Oronectes rusticus*, a species of crayfish much more tolerant to sediment loads. It is very likely that once Sloan's crayfish has been extirpated from the locations on the FEMP, it would not be able to repopulate, *O. rusticus* becoming the sole resident.

In consideration of the above, it was encouraging to read in the OU1 RD-PD that all contaminated water would be diverted from Paddy's Run (pp 2-43, 2-14. lines 27-40, 1-10; p 7-2, lines 24-35; and Table A-1, p A-1) and contained in a storm water management basin (SWMB) designed to hold a 25 year, 24 hour storm. There are, however, some potential problems with the proposed design.

The SWMB is located to the east of the waste pits. There is an emergency overflow that connects the SWMB to two other basins with an outlet to the drainage ditch which drains the north side of the property. This ditch flows to the west and into Paddy's Run just north (upstream) of the railroad bridge. This is just upstream of the population of Sloan's crayfish on the FEMP (Report on the Status of Sloan's Crayfish, *Oronectes sloanii* (Bundy, 1876) at the Fernald Environmental Management Project (FEMP) site, addendum, June 24, 1994, Figure 1). If the drainage point were located 0.1 mile downstream, it would be below any populations of Sloan's Crayfish and drain into a section of Paddy's Run that remains dry for large periods of time during the year and supports little, if any, aquatic life. This should also be considered in grading, so that any uncontrolled storm water discharge will flow downstream of the Sloan's populations before entering Paddy's Run. Perhaps the west or south of the waste pits would be a feasible alternative location for the SWMB. That should make it easier to direct any overflow and uncontrolled runoff downstream in Paddys Run.

Another factor that should be considered during remediation, and particularly during initial grading is that Sloan's crayfish will be least susceptible to silt impacts to Paddy's Run during the winter. This is when the crayfish should be in there burrows and relatively inactive. Initial grading and soil stabilization should occur when they are least susceptible to silt load impacts.

Response: Comment Acknowledged. Additional impact on Paddys Run is expected to be small.

Overall the acreage added to the area that is drained by the ditch is very small. There are about three acres of new area north of the Stormwater Management (SWM) basin that drains to the ditch for all rainfall events. For the greater than 25-year rainfall events there are about 10 acres of new drainage area. These compare to an existing drainage area of over 1 square mile (640 acres). In addition to the silt retention capability of the SWM basin, all other required and necessary erosion control practices will be followed for all disturbed ground to minimize any silt carried to the ditch. Erosion control will be consistent with U.S.D.A.- S.C.S. Water Management and Sediment Control for Urbanizing Areas Manual and the site SWPPP.

The normal rainfall discharge from the SWM basin, for all storms up to a 25-year - 24-hour event, is through the AWWT, via the Biodenitrification Surge Lagoon (BSL). Only those storms greater than the 25-year event (one per 25 years or 0.04 probability per year of occurring) would discharge through the drainage ditch and into Paddys Run. Additionally, when these very infrequent events occur, all stream flows are very high and the effect from an additional flow is minimized.

Changing the SWM basin overflow discharge location to a westerly or southerly discharge would be very undesirable because of the unfavorable topography in those directions.

There is some schedule flexibility in planning of the construction activities. However, the site clearing, stormwater management system, and rough earthwork are the initial site activities and are tied to the 15-month ROD timeline which puts them in summer 1996. Wastewater generated from these activities will be directed to the stormwater management basin and managed in accordance with the existing site NPDES permit. Therefore, additional sediment loading on Paddys Run is not expected during this activity.

Action: No further action required.

2) Commenting Organization: Ohio EPA Commentor: OFFO
Section #: Pg #: Line #: Code:
Original Comment #:

Comment: Please provide a discussion of efforts made to reduce the quantity of waste generated by the D&D of the OU1 Remediation facilities. It is Ohio EPAs expectation that DOE will incorporate into the design process principles of waste minimization. This would reduce both the volume of materials going to the OSDF and the costs incurred in decontaminating materials that could be potentially recycled.

In a similar fashion, please discuss strategies to reduce the hydraulic loading to the expanded AWWT. Any reduction of process waste water streams will be reflected in lower mass loadings to the GMR.

Response: Comment Acknowledged. DOE is committed to factoring waste minimization into the design of the OU1 remediation facilities. In the October, 1995 Operable Unit 1 Draft Preliminary Engineering Design Packages I and II, this was evidenced by the following item in Section 1.4.1 of the Design Criteria Document: "4) The remediation system will be designed with conscious attention to waste minimization (e.g., no structures or parts of structures will be constructed unless absolutely necessary to support the process or comply with ARARs)."

The use of mobile equipment for many material handling activities, rather than stationary equipment (e.g., lengthy fixed conveyors), is an example of efforts which have taken place to date. Not only can mobile equipment support a multiplicity of tasks, but also mobile equipment has a better chance for being reused following completion of the Operable Unit 1 remediation project.

Another effort undertaken, is a value engineering (VE) examination addressed at reducing the size of the remediation facility (e.g., overhead structures and concrete pads). Success in this effort will not only reduce the D&D burden, but will also reduce capital costs for constructing the remediation facilities. As the design progresses, additional input will also be specifically sought from those involved in facilities D&D on site, relative to suggestions on materials, methods, etc., used in constructing the OU1 remediation facilities which will facilitate the D&D.

The design process recognizes OEPA's interest in reducing hydraulic loads to the AWWT. For example, water collected from chiller blowdown and the condensate discharges would be collected and diverted to other uses, e.g., to the scrubber system as makeup for evaporative losses. Runoff water from the pits and from the plant area would be collected and used for dust suppression.

Action: Results of the Value Engineering effort will be evidenced in the March 21, 1996 Pre-final Design Packages. Also, the water systems and the approach to reducing wastewater loading to the AWWT will be presented in further detail in the Pre-final Design Packages.

Reference: The reduced size of the remediation facility is reflected throughout the Pre-final Design Documents, particularly in the General Arrangement Plan, sketch M-03916, found in the General Arrangement Drawings section. Recycling of water is shown in the Process Block flow Diagram OU1 Water Balance, sketch F-04084, found in the Process Flow Diagrams section.

Package I

3) Commenting Organization: Ohio EPA Commentor: OFFO
Section #: 1.3.1 Pg #: 1-12 Line #: 3 Code: C
Original Comment #:

Comment: This sentence states that the on-site disposal facility (OSDF) will accept contaminated soil and debris from OU1. Please rewrite this sentence to be consistent with the OU1 ROD relating to the acceptance of residual soil contamination (i.e., fourth bullet, page D-iii, final OU1 ROD).

Response: Agree. The Pre-final Design Packages will include revisions to this section, including the referenced sentence, to reflect the logic between the above referenced bullets in the OU1 ROD addressing the dispositioning of soils and the discussion currently in this section concerning disposal of soil in the OSDF. As discussed in the response to Ohio EPA comment #25, no efforts will be made to place any debris from the OU1 waste pit processing activities in the OSDF. This does not, however, include placement of materials in the OSDF from the D&D activities, which will be addressed through Facilities D&D remedial planning documents.

Action: Section 1.3.1 of the Design Criteria Document will be revised for the Pre-final Design Packages to read as follows:

"The premise of this section, is that there is a potential that certain of the soils generated as a result of the OU1 remediation activities may be amenable to disposal in the OSDF, and to therefore provide a summary of the waste acceptance criteria which would apply to such placement. As indicated in Section 1.2, the selected remedy in the OU1 ROD includes a key component associated with the management of residual contaminated soils specifically. Item 11 of Section 1.2 addresses the management by Aquifer Restoration Project of OU1 residual contaminated soils consistent with the selected remedy for contaminated process area soils as documented in the OU5 ROD. As discussed in greater detail in Section A.5 of the *Materials Management Plan*, the selected remedy for Aquifer Restoration Project provides for on-site disposal of soils which meet the WAC for the OSDF. Accordingly, OU1 soils which meet the OSDF WAC, provided in Table 1-1, will be disposed of in the OSDF. Pursuant to the OU5 ROD, soil containing contaminants that are incompatible with the clay liners or the underlying native clays beneath the liners will not be allowed in the OSDF. In addition, through the identification of specific geographical areas in the OU5 ROD, where efforts will be made to identify and segregate for treatment (as needed) the soil that qualifies as RCRA characteristic waste, it is envisioned that no significant quantity of RCRA characteristic materials will be placed in the disposal facility."

Reference: The information above appears in the Design Criteria document Section 2.1.5.1, page 2-11, starting on line 20.

4) Commenting Organization: Ohio EPA Commentor: OFFO
Section #: 1.3.1 Pg #: 1-12 Line #: 6-7 Code: C
Original Comment #:

Comment: Please include the hazardous waste characteristic of TCLP, in the discussion of materials that will be excluded from the OSDF.

Response: Comment acknowledged.

Action: The Pre-final Design Packages will be revised to be consistent with the language in the OU5 ROD. The sentence which reads "Soils exhibiting the hazardous waste characteristics of reactivity, ignitability, or corrosivity will also be excluded," will be replaced with the following sentence: "In addition, through the identification of specific geographical areas in the OU5 ROD, where efforts will be made to identify and segregate for treatment (as needed) the soil that qualifies as RCRA characteristic waste, it is envisioned that no significant quantity of RCRA characteristic materials will be placed in the disposal facility."

Reference: This information appears in the Design Criteria document Section 2.1.5.1, page 2-11. starting on line 32.

5) Commenting Organization: Ohio EPA Commentor: DERR
Section #: Table 1-1 Pg #: 1-13 Line #: Code: C
Original Comment #:
Comment: It is unclear within this table, what the units for total uranium are. Is it mg/kg or pCi/g?

Response: The unit for total uranium is mg/kg.

Action: This table will be revised in the Pre-final Design Packages to more clearly identify the correct unit for total uranium.

Reference: The table, which now appears as Table 2-1 on page 2-13 of the DCD, has been revised to clarify the units.

6) Commenting Organization: Ohio EPA Commentor: DERR
Section #: Table 1.4.5 Pg #: 1-19 Line #: 6 Code: C
Original Comment#:
Comment: This sentence states that water sprays will be used for dust suppression. Will contaminated water be captured for pretreatment before disposal? Are drainage controls adequate to prevent runoff of water which is carrying contaminated dust? Same issue. Design Package II, page 5-2, line 26.

Response: Comment Acknowledged. DOE does not intend on adding such a significant quantity of water for dust control that run-off occurs. However, for all areas throughout the project where water sprays are used for dust control, the contaminated water is collected for treatment.

Within the waste pit area the existing stormwater management system will be used and modified as necessary as waste pit excavation progresses (See Section 5.5 of the Excavation Plan). This is appropriately discussed in greater detail in Section 5.5 of the Excavation Plan. Drainage and runoff from the waste pit area passes through the Clearwell (or Facility 18-N), thence to the Biodenitrification Surge Lagoon (BSL), and then to the AWWT.

Action: No action required. A more definitive discussion is appropriately provided in other design deliverables, as noted above.

7) Commenting Organization: Ohio EPA Commentor: DERR
Section #: 1.4.10 Pg #: 1-20 Line #: 21 Code: C
Original Comment #:

Comment: In the event of a power failure, can the emergency generator come on line quickly enough to prevent serious equipment damage or environmental releases?

Response: Comment Acknowledged. Upon loss of power, the drier will cease to rotate and the fuel gas supply and feed to the dyer will be automatically cut off, stopping the generation of off-gas. Automatic start-up of the generator (requiring approximately 15 seconds) will allow the drier to be rotated until cool and will allow the off-gas system to function as before.

Please note: The generator is not an emergency unit but a standby one as defined by article 700, NFPA 70. "Emergency" electrical equipment is required for life safety applications. DOE Order 6430.1A requires "emergency" electrical equipment where it is required within the normal life safety stipulations of article 700 of NFPA 70 and where equipment is designated "safety class" according to section 1300 of DOE 6430.1A. On this project no safety class equipment is anticipated. Standby equipment is provided for orderly shutdown in the event of a loss of normal power.

Action: No action required.

8) Commenting Organization: Ohio EPA Commentor: DERR
Section #: 2.1.1.2 Pg #: 2-2 Line #: 24 Code: C
Original Comment #:

Comment: This sentence states that airborne dust shall be minimized during pit excavation. How will this be accomplished? If spraying is used, will the runoff be adequately contained?

Response: Comment Acknowledged. DOE does not intend on adding such a significant quantity of water for dust control that run-off occurs. However, for all areas throughout the project where water sprays are used for dust control, the contaminated water is collected for treatment.

Within the waste pit area the existing stormwater management system will be used and modified as necessary as waste pit excavation progresses (see Section 5.5 of the Excavation Plan). Drainage and runoff from the waste pit area passes

through the Clearwell (or Facility 18-N), thence to the Biodenitrification Surge Lagoon (BSL), and then to the AWWT.

Action: No further action required.

9) Commenting Organization: Ohio EPA Commentor: OFFO
Section #: 2 Pg #: 2-31 Line #: 10,14 Code: C
Original Comment #:
Comment: What are potential sources for this cooling water? Are there possible benefits to using treated ground water from the AWWT? It is Ohio EPAs expectation that all process water flows will be minimized.

Response: Comment Acknowledged. The current PFDs show two heat exchangers in parallel (50% duty each) being cooled by a closed-loop chiller system. The chiller for this system may require a closed-loop cooling tower with the usual need for blowdown and minimum process water makeup. This and all other process water requirements will be minimized to the extent practicable and cost effective.

Additional process water flows will be minimized, see Section 7.1 of the Process Description. The water demand that cannot be provided by recycle loops will be made up from process water sources of acceptable quality. Although AWWT discharge water may be a possible source, concerns associated with potential pretreatment and other costs for conveying this water, may override any benefit from this source. OU1 plans involve use of stormwater runoff and various wastewater discharges for dust suppression operations, washdowns, etc.

Action: The water systems and the approach to minimizing process water demand will be presented in the Pre-final Design Packages.

Reference: Water use is shown in the Process Block flow Diagram OU1 Water Balance, sketch F-04084, found in the Process Flow Diagrams section.

10) Commenting Organization: Ohio EPA Commentor: DERR
Section #: 2.3.2.3 Pg #: 2-34 Line #: 3-4 Code: C
Original Comment #:
Comment: Lines 3 and 4 recommend a corrosion allowance of 1/16 inch for carbon steel tanks. The Ohio EPA suggests that any tank experiencing sufficient corrosion

to need that much allowance, should be replaced with stainless steel. A severely corrosive environment might concentrate damage into localized pitting corrosion, or even cracking, rather than uniformly attacking the metal. Thus a tank could be breached even if its uniform corrosive attack amounted to only 1/16th inch.

Response: Agree. DOE does not anticipate any "severely corrosive environment" where carbon steel tanks will be used.

Action: The 1/16" corrosion allowance will be eliminated from the Design Criteria Document in the Pre-final Design Packages as a general criteria for carbon steel tanks.

Reference: The corrosion allowance requirement has been eliminated. See DCD Section 2.3.2.3 page 2-36 line 16.

11) Commenting Organization: Ohio EPA Commentor: DERR
Section #: 2.3.6.3 Pg #: 2-50 Line #: 34-39 Code: C
Original Comment #:
Comment: Please confirm that low profile buildings can have a wind loading safety factor of only 1.0.

Response: Comment Acknowledged. Per DOE 6430.1A, Section 0101-1, "Criteria Purpose and Application", DOE projects are to accommodate the intent of local codes and regulations as much as possible. More stringent requirements for factor of safety equal to 1.5 required by OBBC shall be used for <u>all</u> building and structures, including the low rise structures.

Action: The Design Criteria Document in the Pre-final Design Packages will be clarified as indicated above.

Reference: The revised wind loading discussion appears in DCD Section 2.3.6.3 page 2-50 starting in line 18.

12) Commenting Organization: Ohio EPA Commentor: DERR
Section #: 2.3.9.3 Pg #: 2-60 Line #: 37 Code: C
Original Comment #:
Comment: This line states that no safety-class services requiring emergency generator backup are anticipated. What does this statement mean and what are its implications for safety?

Response: Comment Acknowledged. Diesel engine generators of this type normally are able to start within 10 to 15 seconds after loss of power because its purpose is to prevent damage to equipment (i.e., the dryer will continue to rotate until it has cooled). On power failure, the fuel gas supply and feed to the dryer would be automatically cut off, thus stopping the generation of off-gas.

Further relevant discussion: The generator is not an emergency unit but a standby one as defined by article 700, NFPA 70. "Emergency" electrical equipment is required for life safety applications. DOE Order 6430.1A requires "emergency" electrical equipment where it is required within the normal life safety stipulations of article 700 of NFPA 70 and where equipment is designated "safety class" according to section 1300 of DOE 6430.1A. On this project no safety class equipment is anticipated.

Action: No further action required.

13) Commenting Organization: Ohio EPA Commentor: DERR
Section #: ARARs/TBCs Pg #: A-7 Line #: Code: E
Original Comment #:
Comment: ARARS section, entry for air discharges has garbled text under compliance strategy.

Response: Comment Acknowledged.

Action: The ARARs table will be revised in the Pre-final Design Packages to correct word processing errors.

Reference: The entry on page A-7 of the ARAR tables has been corrected.

14) Commenting Organization: Ohio EPA Commentor: OFFO
Section #: Process Description Pg #: 5-4 Line #: 35 Code: C
Original Comment #:
Comment: The radon removal efficiency of the carbon beds is 0.97. The carbon beds that are to be used in the Vitrification Pilot Plant are estimated to have only 85% efficiency. Please explain the design elements in this system that will allow operation at a higher efficiency.

Response: Comment Acknowledged. The 97% efficiency was initially used for the vitrification pilot plant (VPP). However, after actual testing, 85% was

determined to be more realistic for that system design (97%, however, could be achieved if certain design modifications were made).

This information is not directly applicable to the dryer off-gas system since the VPP and dryer off-gas systems are two separate and distinct system designs (they differ in flowrate, off-gas composition, size of carbon beds, etc). The differences in these design parameters will result in differences in system operating efficiencies.

From an engineering design standpoint, the efficiency of the carbon bed is determined based upon the incoming radon concentration and the required limit on radon emission. The radon emission limit is still being determined for the dryer off-gas, therefore the required carbon bed efficiency (or the actual need for carbon beds for the dryer off-gas) has yet to be determined.

Action: The Process Description will be revised for the Pre-final Design Packages to remove the reference to 97% efficiency, and state that the dryer off-gas system will be designed to meet the limit on radon emission.

Reference: The reference to 97% efficiency has been removed. See Process Description Section 5.1, page 5-4 lines 21-24 and Section 5.2 page 5-6 line 18.

15) Commenting Organization: Ohio EPA Commentor: OFFO
Section #: Process Description Pg #: 7-2 Line #: 14,32 Code: C
Original Comment #:

Comment: The Ohio EPA concurs that recycling of condensate water for reuse in washing or dust control should be maximized. It is our expectation that all process water streams will be evaluated and minimized to reduce hydraulic loading to the expanded AWWT. Ohio EPA urges DOE to develop methods to reduce the volume of process waste water and storm water flows to the AWWT. If the possibility to "privatize" the OU1 operations is realized, Ohio EPA expects that there will be incentives built into the process that will encourage the sub-contractor to minimize the production of waste water.

Response: Comment acknowledged. The design process recognizes OEPA's interest in reducing hydraulic loads to the AWWT. For example, water collected from chiller blowdown and the condensate discharges would be collected and diverted to other uses, e.g., to the scrubber system as makeup for evaporative losses. Runoff water from the pits and from the plant area would be collected and used for dust suppression.

If DOE decides to proceed with a privatized concept, consideration will be given to incorporating incentives into the process to encourage the subcontractor to minimize the production of waste water.

Action: The water systems and the approach to reducing wastewater loading to the AWWT will be presented in further detail in the Pre-final Design Packages.

Reference: Water use is shown in the Process Block flow Diagram OU1 Water Balance, sketch F-04084, found in the Process Flow Diagrams section.

16) Commenting Organization: Ohio EPA Commentor: OFFO
Section #: Grading Plan Pg #: 91X-5900-G-00136 and
Pg #: 91X-5900-G-00137 Line#: Code: C
Original Comment #:
Comment: Several existing monitoring wells will be effected by the construction of the remediation system. Please discuss the closing of these wells and the installation of replacements wells.

Response: Comment Acknowledged. Of the fifteen (15) monitoring wells potentially impacted by the planned site preparation and construction activities, eight (8) were originally installed to monitor perched water zones in the glacial overburden, four (4) were installed to monitor the top of the Great Miami Aquifer (GMA), two (2) were installed to monitor the middle of the GMA, and one was installed to monitor the base of the GMA. The table included provides further information about these monitoring wells.

WELL NUMBER	STATUS	REMARKS
1030	Plugged/Abandoned	Previously Plugged and Abandoned.
1038	Glacial Till Well	Scheduled for Plugging and Abandonment, Fiscal Year 1996.
1076	Glacial Till Well	Scheduled for Plugging and Abandonment, Fiscal Year 1996.
1077	Glacial Till Well	Scheduled for Plugging and Abandonment, Fiscal Year 1996.
1952	Glacial Till Well	Scheduled for Plugging and Abandonment, Fiscal Year 1996 - Located just Northeast of Well 2953.
11077	Glacial Till Well	Scheduled for Plugging and Abandonment, Fiscal Year 1996.
11215	Glacial Till Well	Scheduled for Plugging and Abandonment, Fiscal Year 1996.
11216	Glacial Till Well	Scheduled for Plugging and Abandonment, Fiscal Year 1996.
2454	Top of Aquifer Well	Will retain for future ground water monitoring purposes.
2648	Top of Aquifer Well	Will retain for future ground water monitoring purposes.
2821	Top of Aquifer Well	Will retain for future ground water monitoring purposes.
2953	Top of Aquifer Well	Will retain for future ground water monitoring purposes.
3001	Middle of Aquifer Well	Will retain for future ground water monitoring purposes.
3821	Middle of Aquifer Well	Will retain for future ground water monitoring purposes.
4001	Base of Aquifer Well	Scheduled for Plugging and Abandonment, Fiscal Year 1996.

Present and Future Status of Wells in the Vicinity of the Waste Pits Remediation Facility Area.

Action: DOE will plug and abandon all glacial overburden, or Type 1 wells. All top of GMA, or Type 2 wells, will be retained for future ground water monitoring purposes. All middle of GMA, or Type 3 wells, will be retained for future ground water monitoring purposes. The base of GMA well, or Type 4 well, will be plugged and abandoned. The Type 4 well is no longer required for GMA monitoring purposes, and thus, will not be replaced unless determined to be necessary by the FEMP Ground Water Programs staff. No additional monitoring wells will be installed.

All wells to be plugged and abandoned will be done so during Fiscal Year 1996. Plugging and abandonment will be performed in accordance with FEMP Plugging and Abandonment standard operating procedures, OAC 3745-9, and American

Society for Testing and Materials standards. All wells to be retained will be fitted with reinforced steel posts set into concrete adjacent to the well heads, to minimize the possibility of damage to the wells from facility construction activities.

Reference: No changes to the Pre-final Design Packages resulted from this action.

17) Commenting Organization: Ohio EPA Commentor: DERR
Section #: Dryer Specification Pg #: 28 of 61 Line #: 28 Code: C
Original Comment#:
Comment: The requirement for a maximum deflection of 0.0002 mils between supports seems too stringent. It is doubtful such a small deflection could be practically measured, let alone achieved.

Response: Agree. This was a typographical error and should actually read 20 mils.

Action: The error will be corrected in the Pre-final Design Package dryer spec.

Reference: See Specification Section 11182 page 23 of 53 lines 8-9.

18) Commenting Organization: Ohio EPA Commentor: DERR
Section #: Off-Gas Control, 15060 Pipe, Fittings, Valves, etc.
Pg #: 10 of 10 Line #: Code: C
Original Comment #:
Comment: Please check the design and test pressures for this off-gas system. What does -35 psig in w.g. mean? This appears wherever this section is repeated.

Response: Comment Acknowledged. The design and test pressures are correct as stated. "-35 in. w.g." means that the design pressure is 35 inches of water gage, vacuum. There is no mention of psig for this design pressure. "-35 in. w. g." is approximately equal to 13.4 psia.

Action: No action required.

19) Commenting Organization: Ohio EPA Commentor: OFFO
Section #: Excavation Plan Pg #: 6-1 Line #: 37 Code: C
Original Comment #:

Comment: Ohio EPA concurs that addressing public concerns is a valid reason to initiate an air monitoring program. We believe that a real-time particulate air monitoring program should be implemented regardless of the outcome of the modeling.

Response: Comment Acknowledged. DOE has been investigating to determine if real-time air particulate air monitors exist that my be applicable to the activities at the FEMP. At this time, no known monitors exist that may be applied towards environmental radiological air particulate monitoring on a real-time basis.

Action: No action required for the Pre-final Design Packages. DOE will continue to evaluate existing equipment for this purpose.

20) Commenting Organization: Ohio EPA Commentor: OFFO
Section #: Excavation Plan Pg #: 6-2 Line #: 26 Code: C
Original Comment #:

Comment: Ohio EPA believes that the public concerns regarding air monitoring will be addressed best if the air monitors are located to detect the maximum levels that are being released to uncontrolled areas rather than at areas which may be considered representative of what is being released.

Response: Agree.

Action: The Excavation Plan will incorporate air monitoring for maximum levels for the Pre-final Design Packages.

Reference: See the Excavation Plan, Page 6-2, Line 28.

21) Commenting Organization: Ohio EPA Commentor: OFFO
Section #: Materials Mgm't Plan Pg #: A-16 Line #: Figure A-2 Code: C
Original Comment #:

Comment: It is unclear from the chart what processable waste streams are to be placed in the on-property disposal facility.

Response: Agree; the only "OU1 Processable Wastes" that will be placed in the OSDF are soils (v. waste pit contents) which meet the WAC for on-site disposal.

Action: Figure A-2 is being revised (for OU1 Processable Wastes) to show a block between "Package for Transport" and "Placement in the On-Site Disposal Facility", which shows that the material proceeding along this path includes only

"Soils Which Meet the WAC for On-Site Disposal." The revisions will be incorporated into the Materials Management Plan for the Pre-final Design Packages.

Reference: The revised figure appears as Figure A-1 on page A-12 of the Materials Management Plan.

22) Commenting Organization: Ohio EPA Commentor: OFFO
Section #:91-X-G-5900 Pg #: A-16 Line #: Figure A-2 Code: C
Original Comment #:

Comment: Section A shows that uncontaminated soil will be used to backfill for the construction of the access ramp. Use of uncontaminated material should be minimized.

Response: Comment Acknowledged. Uncontaminated soil in this drawing is intended to mean that the utilization of the relatively uncontaminated waste pit soil covers will be used as backfill in the construction of the access ramp. Utilizing this approach will allow DOE to eliminate the contamination of additional soils while also minimizing airborne contamination that will result from trucks driving over the soils.

Action: The Pre-final Design Packages drawing will not that uncontaminated soils refers to waste pit cover soils.

Reference: Drawing G-00131 in the Conceptual Drawings section has been revised.

23) Commenting Organization: Ohio EPA Commentor: OFFO
Section #: Transportation Plan Pg #: 7-10 Line #: Figure 7-4 Code: C
Original Comment #:

Comment: The circled numbers on the map are not in the right states.

Response: Comment Acknowledged. The numbers on the map denote the involved DOE Region, not the state in which DOE's Regional Coordinating Office for Radiological Assistance is located.

Action: No action required.

24) Commenting Organization: Ohio EPA Commentor: OFFO

Section #:02713 Detention Pond Geosynthetics Pg #: 6 of 9 Line #: 9 Code: C

Original Comment #:

Comment: Page 6, Section 3.2(A) states that the soil beneath the liner shall be sterilized to prevent the growth of vegetation and the choice of herbicide is to be made by a local agricultural authority. It should also be stated that the compatibility of the herbicide and the carrier be checked with the liner manufacturer.

Response: Agree. In reconsideration, the use of a herbicide is not considered necessary for subgrade preparation and satisfactory liner performance.

Action: The requirement to use a herbicide below the geomembrane will be deleted from the Detention Pond Geosynthetics specification for the Pre-final Design Packages submittal.

Reference: The requirement for herbicide has been deleted. See Section 012713 part 3.1 page 11 of 22.

Additional General Comments

25) Commenting Organization: Ohio EPA Commentor: OFFO
Section #: General Pg #: Line #: Code: M
Original Comment #:

Comment: The option to dispose of large debris with the OU3 materials has not taken into account several critical factors that are unique to the WAC development of OU3. Specifically, the OU3 WAC for technetium-99 has been developed using a mass-based approach. The additional mass of Tc-99 from the OU1 debris has not been considered in the WAC development. Additionally, other potential constituents within the OU1 debris were not incorporated into the OU3 WAC development.

Ohio EPA believes DOE must exhaust all size-reduction opportunities prior to opting for transfer of waste pit wastes to OU3. DOE must attempt to utilize disposal opportunities at Envirocare and NTS prior to considering forwarding the material to OU3. The types of debris that cannot be size-reduced has not been explicitly stated. Please give examples of the types and volumes of debris which may be potentially encountered that are not amenable to size reduction. Additionally, a justification for these estimates should be provided.

Additionally, a number of the design drawings state the materials will be disposed of on-site. Such statements are premature considering the OU3 RI/FS has yet to be approved and that such material would be more like process related metals (proposed for off-site disposal) than any other OU3 waste category.

Response: After reconsideration of the various issues associated with placing debris from the waste pits into the OSDF, DOE has concluded that there is no significant benefit in pursuing this option. Therefore, all debris originating in the pits will be sent off-site for disposal. This does not, however, include placement of materials in the OSDF from the D&D activities, which will be addressed through Facilities D&D remedial planning documents.

Action: The various Pre-final Design Documents will be revised to reflect that no debris from the waste pits will be placed in the OSDF.

Reference: The various Pre-final Design Documents have been revised. See, for example, the Figure A-1 on page A-12 of the Materials Management Plan and Section 2.1.5.1 on page 2-11 of the Design Criteria document.

OHIO EPA COMMENT NUMBERS 26, 27, AND 28 ARE BEING ADDRESSED IN A SINGLE RESPONSE (UNDER COMMENT 28) BECAUSE THE COMMENTS ADDRESS SIMILAR CONCERNS.

26) Commenting Organization: Ohio EPA Commentor: DHWM
Section #: General Pg #: Line #: Code: C
Original Comment #:
Comment: OEPA DHWM does not consider the Remedial Design document to have adequately addressed concerns associated with the management and treatment of RCRA characteristic wastes. The Remedial Design document should acknowledge that remediation activity will involve excavation and treatment of RCRA characteristic hazardous waste.

27) Commenting Organization: Ohio EPA Commentor: DHWM
Section #: General Pg #: Line #: Code: C
Original Comment #:
Comment: Section 2.0 of the Final OU1 ROD acknowledges the uncertainty surrounding both the Hazardous Waste Management Unit (HWMU) status, and presence of RCRA characteristic wastes associated with Pit 5. The ROD indicated that a final characterization of Pit 5 waste would be completed following treatment. The ROD summarized Pit Waste concentration ranges for contaminants of concern. Remediation activity may involve excavation of regulated levels of RCRA TC waste regardless of the HWMU status of a particular waste pit. Additional RCRA characterization of waste material from other pits may be required prior to disposal. It would seem prudent then, to conduct remediation as if RCRA TC wastes were being managed in this activity.

28) Commenting Organization: Ohio EPA Commentor: DHWM
Section #: Table A-3, Pkg 1 Pg #: Line #: Code: C
Original Comment #:
Comment: Please refer to the action specified ARARs. The Ohio EPA DHWM does not agree that OAC 3745-56-51, 54 and 58 requirements do not apply to the processing of any OU1 wastes. Please reference this ARAR as outlined in the ROD. Current language in the "compliance strategy" for this ARAR is inconsistent with the ARAR in the ROD. Current language in the "compliance strategy" for this ARAR is also confusing. Please revise the ARAR to clarify applicability of hazardous waste regulations governing waste piles. Unless DOE-FEMP can show further justification as to why these ARARs are not relevant, the document should be revised to include a description of the design standard,

procedures and controls developed to achieve compliance with hazardous waste management regulations appropriate to storage and treatment activity involving waste piles.

Response: Response to numbers 26, 27, and 28:
Comment acknowledged; In accordance with the OU1 ROD, characterization of OU1 material will be conducted after treatment, but prior to off-site shipment. Treatment of OU1 pit wastes will generate a homogenous waste stream that best represents the waste stream to be disposed. The treated waste stream must comply with regulatory requirements and disposal facility waste acceptance criteria for radiological concentrations, and must be characterized with respect to RCRA.

Data in the OU1 RI do not indicate the presence of RCRA characteristic wastes throughout the waste pit area. If, during waste acceptance criteria sampling, RCRA characteristic wastes are identified, the waste will be packaged and shipped to a low-level disposal facility that is also capable of treating and disposing RCRA waste.

OAC 3745-56-51, 54, 58 establish requirements for design/operation, monitoring/inspection, and closure of hazardous waste in piles. DOE believes these requirements are not applicable because the OU1 feedstock and 14-day storage piles are part of the ongoing remediation process. However, DOE recognizes OEPA's concerns relative to the management of this material and believes that the OU1 design meets the substantive intent of the requirements. For example, the processing facility which includes feedstock piles is located under cover and on a concrete surface with run-on/run-off collection control; the feedstock and 14-day piles will be managed to control wind dispersal; and the processing facility will be remediated to remove all processing facilities and residual contamination consistent with established remediation levels.

Action: The Permit-Information-Summary and ARARs Crosswalk in the Design Criteria Document will be revised for the Pre-final Design Packages to show how the OU1 design meets the substantive intent of the requirements.

Reference: The Substantive Permit Crosswalk has been added following the ARAR table in the Design Criteria document.

Additional Ohio EPA Comments

Ohio EPA provided these comments in response to FERMCO/DOE's proposed resolutions to OEPA's comments given above. Because the design of the OU1 remediation system has been suspended while FERMCO explores the privatization of the remediation of OU1, the incorporation of these comments into the Pre-final Design Packages will be held in abeyance until the privatization of the remediation of Operable Unit 1 has been resolved.

1) Commenting Organization: Ohio EPA Commentor:DSW
Section #. General Page#: Line#: Code: M
Original Comment #: 1

Comment: The following statement from DOE's response to this comment needs to be addressed: "Erosion control will be consistent with U.S.D.A.-S.C.S. Water Management and Sediment Control for Urbanizing Areas Manual and the site SWPPP." The erosion control should follow the guidelines in the publication **Rainwater and Land Development, Ohio's Standards for Stormwater Management and Stream Protection** 1995, which replaces the manual that is referenced by DOE. Additionally, DOE should develop a SWPPP for this project which includes a monitoring component specific to the project and not reference a sitewide SWPPP.

Response: Comment Acknowledged.

Action: DOE will follow the guidelines set forth in *Rainwater and Land Development, Ohio's Standards for Stormwater Management and Stream Protection, 1996.*

The Site-wide SWPPP, being developed as a condition of the existing site NPDES Permit, will address specific inspection and monitoring criteria applicable to all projects conducted at the site. The Permit-Information-Summary in the Design Criteria Document will be revised for the Pre-final Design Packages to identify the basic requirements mandated under the SWPPP; and to identify the appropriate design package that addresses that requirement.

2) Commenting Organization: Ohio EPA Commentor:DHWM
Section#: Page#: Line#: Code:C
Original Comment #: 26,27,28

Comment: The Ohio EPA DHWM does not feel that DOE has adequately addressed the concerns raised in our original comments numbered 26, 27, 28. The DHWM is

in contact with the appropriate DOE personnel regarding these issues, and is awaiting further explanation/justification related to DOE's response to these comments.

Response: Comment Acknowledged.

Action: The concerns raised by the DHWM centered on whether OAC 3745-56 is applicable to the OU1 design features, specifically to the processing feedstock piles. As documented in the OU1 Record of Decision, OAC requirements for waste piles are applicable or relevant and appropriate requirements that must be addressed during remedial activities. Applicable under CERCLA means those cleanup standards, standards of control, and other substantive environmental protection requirements, criteria, or limitations promulgated under Federal or State law that specifically address a hazardous substance, pollutant, contaminant, remedial action, location, or other circumstance at a CERCLA site. DOE acknowledges that these regulations are applicable or relevant and appropriate requirements (ARARs) under CERCLA; hence, DOE will comply with the substantive requirements of these regulations as mandated. Therefore, to demonstrate compliance with the substantive requirements, the "Permit Crosswalk" contained in the Design Criteria Document will be revised for the Pre-final Design Packages to include the design requirements for waste piles per OAC 3745-56 and identify the appropriate design package that addresses the substantive intent of each requirement. The enhanced level of detail contained in the "crosswalk" will show explicitly how DOE will comply with the subject requirements.

2038

PLANT FACILITIES DESIGN
CRITERIA DOCUMENT

2038

Design Criteria Document for the Operable Unit 1 Remediation System Design

Fernald Environmental Management Project
March 1996

Submitted by:
U.S. Department of Energy
Fernald Area Office
P.O. Box 398705
Cincinnati, Ohio 45239-8705

58

2038

Design Criteria Document for the Operable Unit 1 Remediation System Design

Fernald Environmental Management Project
March 1996
Revision 1

Submitted by:
U.S. Department of Energy
Fernald Area Office
P.O. Box 398705
Cincinnati, Ohio 45239-8705

59

Design Criteria Document for the Operable Unit 1 Remediation System Design

CONTENTS

SECTION

1.0 Project Description 1-1
1.1 Project Scope 1-1
1.1.1 Background 1-1
1.1.2 Proposed Facility Location 1-4
1.1.3 Design Criteria Document Interfaces 1-4
1.1.4 Project Constraints and Limitations 1-5
1.2 Description of Selected Remedial Alternative 1-11
1.3 Assumptions 1-13
1.3.1 Design Assumptions 1-13

2.0 Design Basis 2-1
2.1 Functional and Regulatory Requirements 2-1
2.1.1 Functional Requirements 2-1
2.1.2 Identification of Standards/Requirements 2-5
2.1.3 ARARs and TBC Requirements 2-10
2.1.4 Substantive Permitting Requirements 2-11
2.1.5 Waste Acceptance Criteria for Disposal Facilities 2-11
2.1.6 Packaging Requirements 2-18
2.2 General Design Criteria 2-19
2.2.1 Requirements for Waste Streams 2-19
2.2.2 Human Factors 2-21
2.2.3 General Nuclear, System Safety, and Worker Protection Requirements 2-22
2.2.4 Security 2-25
2.2.5 Geotechnical 2-26
2.3 Discipline-Specific Design Criteria 2-32
2.3.1 Process 2-33
2.3.2 Mechanical Process 2-34
2.3.3 Piping 2-36
2.3.4 Material Handling 2-39
2.3.5 Civil 2-42
2.3.6 Structural 2-48

CONTENTS (Continued)

2.3.7 Architectural 2-54
2.3.8 Mechanical Utilities 2-56
2.3.9 Electrical 2-61
2.3.10 Instrumentation 2-64

3.0 References 3-1

APPENDICES

A ARARs and TBC Requirements Tables

B Substantive Permit Crosswalk

C Results of the Studies/Tests Relevant to Remediation System Design

D Dryer Off-Gas Stack Limits

LIST OF ILLUSTRATIONS

FIGURES

1-1 OU1 Boundaries
1-2 Location of the OU1 Remediation Facilities

TABLES

2-1 On-Site Disposal Facility Waste Acceptance Criteria
2-2 Excerpts from the Selected Representative PCDF's Radioactive Material License
2-3 Selected Representative PCDF Waste Acceptance Criteria
2-4 Excerpts from the NTS Waste Acceptance Criteria
2-5 Summary of Radiation Dose Limits and Control Levels
2-6 Summary of Geotechnical Data by Waste Pit
2-7 Summary of Geotechnical Composite Samples by Material Type
2-8 Process Parameters
2-9 Minimum Design Dead Loads
2-10 Minimum Design Live Loads

LIST OF ACRONYMS AND ABBREVIATIONS

ACOE	United States Army Corps of Engineers
ASNT	American Society for Nondestructive Testing
AASHTO	American Association of State Highway and Transportation Officials
ACGIH	American Conference of Government Industrial Hygienists
ACI	American Concrete Institute
AFBMA	Anti-Friction Bearing Manufacturers Association
AGMA	American Gear Manufacturers Association
AISC	American Institute of Steel Construction
ALARA	As Low As Reasonably Achievable
ALTER	Accelerated Life Testing and Environmental Research Facility
ANS	American Nuclear Society
ANSI	American National Standards Institute
API	American Petroleum Institute
ARAR	Applicable or Relevant and Appropriate Requirement
ARI	American Refrigeration Institute
ASCE	American Society of Civil Engineers
ASHRAE	American Society of Heating, Refrigeration, and Air Conditioning Engineers
ASME	American Society of Mechanical Engineers
ASTM	American Society for Testing and Materials
AWS	American Welding Society
AWWT	Advanced Wastewater Treatment
BAT	Best Available Technology
CBR	California Bearing Ratio
CERCLA	Comprehensive Environmental Response, Compensation, and Liability Act
CFR	Code of Federal Regulations
CRU	CERCLA/RCRA Unit
CWA	Clean Water Act of 1977, as amended
D&D	Decontamination and Dismantlement
DCD	Design Criteria Document
DEEP	Dewatering Excavation Evaluation Program
DOE	United States Department of Energy
DOE-NV	United States Department of Energy - Nevada Office of Operations
DOT	United States Department of Transportation
ERDA	Energy Research and Development Administration
F	Fahrenheit
FEMP	Fernald Environmental Management Project
FERMCO	Fernald Environmental Restoration Management Corporation
FFCA	Federal Facilities Compliance Agreement

LIST OF ACRONYMS AND ABBREVIATIONS (Continued)

fpm	feet per minute
FSAR	Final Safety Analysis Report
ft^2	square foot (feet)
gpm	gallons per minute
HEPA	High-Efficiency Particulate Air
hr	hour
HVAC	Heating, Ventilation, and Air Conditioning
IEEE	Institute of Electrical and Electronics Engineers
IES	Illuminating Engineers Society
kg	kilogram
kV	Kilovolt
kVA	Kilovolt-Ampere
kW	Kilowatt
lb	pound
m^2	square meter
MBMA	Metal Building Manufacturers Association
MCC	Motor Control Center
MEI	Maximally Exposed Individual
mrem	millirem
MSS	Manufacturers Standardization Society
NAD	North American Datum
NEMA	National Electrical Manufacturers Association
NESHAP	National Emission Standards for Hazardous Air Pollutants
NETA	National Electrical Testing Association
NFPA	National Fire Protection Association
NP	Nonplastic
NPDES	National Pollutant Discharge Elimination System
NPH	Natural Phenomena Hazard
NTS	Nevada Test Site
OAC	Ohio Administrative Code
OBBC	Ohio Basic Building Code
ODOT	Ohio Department of Transportation
Ohio EPA	Ohio Environmental Protection Agency
OSHA	Occupational Safety and Health Administration
OU	Operable Unit
PC	Performance Category
PCDF	Permitted Commercial Disposal Facility
pcf	pounds per cubic foot

LIST OF ACRONYMS AND ABBREVIATIONS (Continued)

pCi/L	picocuries per liter
psf	pounds per square foot
psi	pounds per square inch
PVC	Polyvinyl Chloride
RCRA	Resource Conservation and Recovery Act
RI	Remedial Investigation
ROD	Record of Decision
S/RID	Standards/Requirements Identification Document
SAE	Society of Automotive Engineers
SCS	Soil Conservation Service
sec	second
SSC	Structure, System, and Component
STD	Standard (DOE)
TBC	To Be Considered
TEMA	Tubular Exchanger Manufacturers Association
UBC	Uniform Building Code
UCRL	University of California Research Laboratory
UL	Underwriters Laboratories
US EPA	United States Environmental Protection Agency
V	Volt
WAC	Waste Acceptance Criteria
yd^3	cubic yard
yr	year

SECTION 1

PROJECT DESCRIPTION

1.1 Project Scope

As part of the June 1990 Consent Agreement and the December 1991 Amended Consent Agreement between the United States Environmental Protection Agency (US EPA) and the United States Department of Energy (DOE), the DOE agreed to remediate the Fernald Environmental Management Project (FEMP). The consent agreement divided remedial areas at the FEMP into five operable units. This DCD addresses Operable Unit 1 (OU1), which is Waste Pits 1 through 6; the Burn Pit; the Clearwell; and berms, liners, and soil within the operable unit boundary. Figure 1-1 shows the boundaries for OU1.

This Design Criteria Document (DCD) establishes the OU1 remediation system functional requirements. In addition, it defines the design criteria that the design engineers must follow during preliminary and detailed design activities. The word "shall" is used in this DCD to denote criteria derived from a law, regulation, engineering code or standard, DOE Order/standard, or site policy. If additional requirements are identified during the detailed design phases, this document will be revised and reissued. This DCD is a portion of the Design Criteria Package described in the *Final Remedial Design Work Plan for Remedial Actions at Operable Unit 1* (DOE 1995b).

1.1.1 Background

The waste pits were constructed beginning in 1952 for the storage or disposal of large quantities of liquid and solid wastes generated by various chemical and metallurgical processing operations. Wastes generated at the FEMP, as well as some waste shipped from other DOE facilities, were disposed of on the property. The *Remedial Investigation Report for Operable Unit 1* (DOE 1994b) provides OU1 characterization data, as well as size, shape, construction, contents, and operation of the waste pits.

The selected remedy, discussed in Subsection 1.2, addresses the OU1 environmental and health threats by removing the waste materials and contaminated soils to health-based levels, and treating the waste materials and soils to meet the waste acceptance criteria (WAC) of the appropriate disposal facility. Subsection 1.3 describes the WAC for the On-Site Disposal Facility, Envirocare (which is the representative permitted commercial disposal facility [PCDF]), and the Nevada Test Site (NTS).

The OU1 remediation system design will be comprised of four basic components: waste retrieval, waste preparation drying, and off-gas treatment, and dried waste blending and loadout. A description of the project components is provided in the *Process Description of the Remediation System Design* (PARSONS

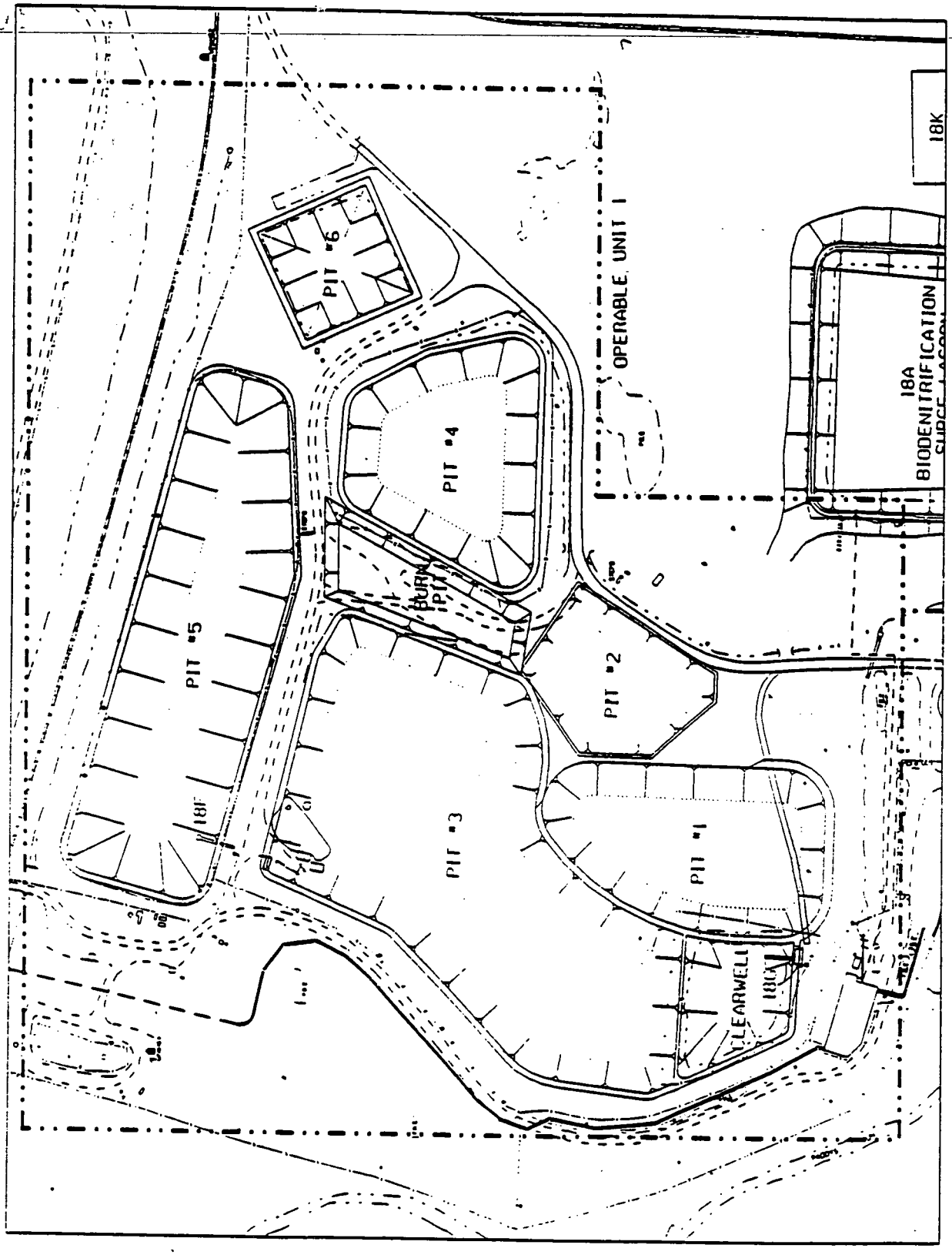

Figure 1-1 - OU1 Boundaries

skg04164.m po145@ws412. Fri Mar 15 14:08:41 CST 1996

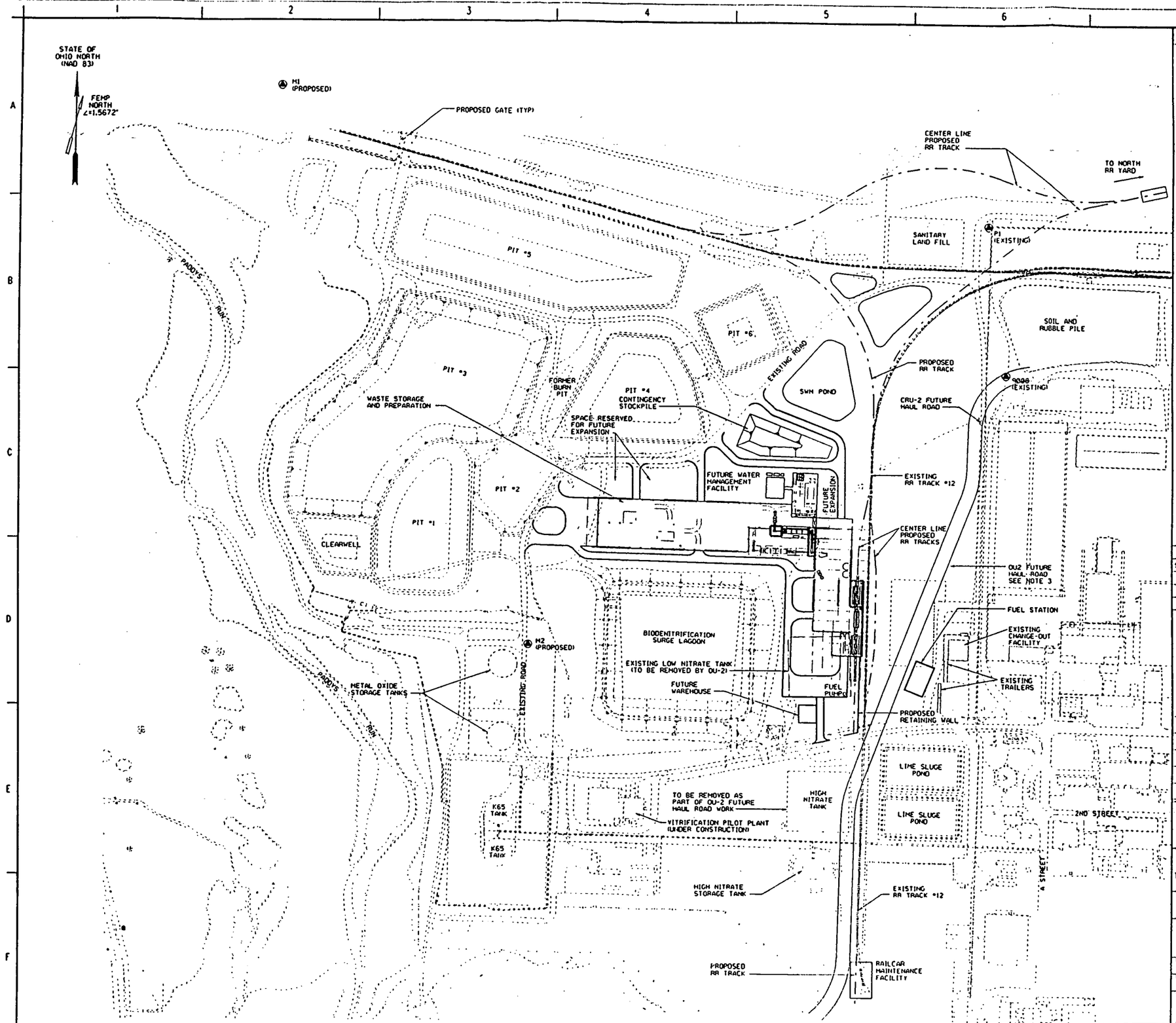

Figure 1-2 - Location of the OU1 Remediation Facilities

NOTES

1. EXISTING CONDITIONS SHOWN ON THIS DRAWING WERE PREPARED FROM THE DOCUMENTS LISTED BELOW:
   EXISTING SITE DATA SOURCE (IN PLANT FILES)
   FEMP 1992 FLYOVER SURVEY
   FEMP CONTRACTOR PROJECT DESIGN DOCUMENTS
2. THIS DRAWING SUPERSEDES DRAWING NO. SK-G-03936 REV. B.
3. COORDINATION OF OU2 HAUL ROAD CONSTRUCTION AND PROPOSED RAILROAD SPUR IS REQUIRED.

~~2031~~
2038

LEGEND

EXISTING		PROPOSED
	ROAD/PAVEMENT	
	RAILROAD	
	STRUCTURE	
	FENCE	
	SURVEY MONUMENT	

REF DWG NO.	DRAWING TITLE
SK-G-04165	PRELIMINARY UTILITY PLAN

[redacted]

PRELIMINARY
NOT FOR CONSTRUCTION

REV. NO.	CODE OF REVISION PURPOSE - DESCRIPTION	A-E	FEMCO	DATE
B	ISSUED FOR EPA SUBMITTAL PRE-FINAL DESIGN			3/28/96
A	ISSUED FOR CLIENT REVIEW PREFINAL DESIGN FOR EPA		NA	2/19/96

INITIALS AND DATE

UNITED STATES
DEPARTMENT OF ENERGY
FERNALD ENVIRONMENTAL MANAGEMENT PROJECT

THIS DRAWING PREPARED BY
PARSONS
THE RALPH M. PARSONS CO. - PARSONS MAIN, INC. - ENGINEERING-SCIENCE, INC.
CINCINNATI, OHIO

PROJECT NAME
OU1 REMEDIATION SYSTEM DESIGN

DRAWING TITLE
CIVIL
PRELIMINARY SITE PLAN

DRAWN BY	DATE	LEAD ENGINEER	DATE	ENGINEER BY	DATE
T. AFSHAR	01/30/96			ED AUDRIN	2/16/96
PLOTTED BY NO		FLOOR		SCALE 1"=100'	CLASS
SUBMITTED FOR APPROVAL		FEMCO CM APPROVAL NA		68	

A-E PROJECT NO.	DATE	FEMP PROJECT NO.	DRAWING SHEET CODE NO.	SHEET NO.	REV. NO
		WBS 1.1.1.1.1.3.1 00-90701	SK-G-04164	G0001	B

PREPARED UNDER PARSONS PROJECT ORDER NUMBER WPRAP/P0145

3/15/96, 1:44pm, Rev. No.: 1

1996b) and shown on the process flow diagrams in the Plant Facilities Engineering Package. Subsection 2.1 presents the functional and regulatory requirements for the remediation facilities.

An indirect fired rotary dryer will be used to reduce the moisture content of the waste. This treatment will allow the waste material to meet the WAC for the off-site disposal facility. The initial system design will leave space for installation of additional equipment or expansion of the facilities. Space equivalent to that required for a second dryer and the associated off-gas treatment system will be provided. Utilities will be provided for a two dryer system. In addition, a reserve capacity of 25 percent will be provided for utilities where appropriate. Should design development or operating experience identify the need for supplemental facilities, the DCD will be revised to reflect any design criteria changes.

1.1.2 Proposed Facility Location

Figure 1-2 shows the area planned for the OU1 remediation facilities. This area will cover open space between the road on the east side of Waste Pits 2, 4, and 6, the Biodenitrification Surge Lagoon, and rail spur 12. The site improvement package will include a topographic map. The following monuments will be survey control points for the OU1 area:

1) M-1 - N 482,600.0, E 1,346,400.0
2) M-2 - N 481,025.0, E 1,347,100.0
3) P-1 - N 482,223.87, E 1,348,384.18
4) 9008 - N 481,809.07, E 1,348,436.33

The proposed OU1 remediation facilities will be located in close proximity to the waste pits and the incoming/outgoing rail system. As indicated on Figure 1-2, the proposed new rail spur will connect the existing rail system and the waste loadout area.

The proposed facility location will extend across the eastern limit of the OU1 area and into an area designated as OU5. Subsection 1.1.4 discusses the soil volume project constraint resulting in the necessary coordination of remedial activities in support of the OU1 and OU5 Records of Decision.

1.1.3 Design Criteria Document Interfaces

This subsection outlines the interfaces between this DCD and other OU1 documents. The following documents were used to develop the design criteria presented in this DCD.

1) The *Remedial Investigation Report for Operable Unit 1* (DOE 1994b) provides characterization data for the OU1 waste. These data are used as input for the design calculations.

2) The *Feasibility Study Report for Operable Unit 1* (DOE 1994c) describes the remedial alternatives, including the final selected remedial alternative.

2038

3) The Record of Decision (ROD) (DOE 1995a) defines the selected remedial alternative and regulatory requirements for OU1 remediation, forming the basis for the design.

4) The *Remedial Design Work Plan for Remedial Actions at Operable Unit 1* (DOE 1995b) presents the activities required to develop the final design plans, construction plans, specifications, and procurement documents for the implementation of the OU1 selected remedy.

The following documents are related to this DCD:

1) The *Plant Facilities Engineering Site Improvements Plan* and equipment specifications provide detailed information on the remediation facilities for OU1. This DCD provides the functional requirements and design criteria which form the basis of these documents.

2) The *Transportation and Disposal Plan* (FERMCO 1995b) provides detail on rail upgrades that will be required to support OU1 remedial activities. Subsection 2.3.5.2 notes the national codes, standards, and requirements for the rail upgrades; however, the *Transportation and Disposal Plan* (FERMCO 1995b) discusses the rail upgrades in detail.

3) The *Waste Excavation Plan for the Operable Unit One Remediation System Design* describes the excavation process. This plan also provides detail on stormwater controls and fugitive dust suppression used during excavation of the pits.

4) A Safety Assessment, which is based on this Pre-Final Design Package, will establish the hazard category for these facilities. This preliminary hazard category will contribute to setting performance grades and quality levels for the Systems, Structures, and Components (SSCs) which comprise the facility. These activities will be completed in 1996, and, when approved, will become a part of this DCD and will guide further engineering, procurement, construction, and operation of the remedial facilities.

1.1.4 Project Constraints and Limitations

The following nonregulatory constraints and limitations are included as criteria for the design of the OU1 remediation facilities.

1.1.4.1 Integration with Other FEMP Remediation Projects

The following discussions reflect constraints and limitations on the OU1 remediation activities as a result of coordinating OU1 remediation activities with those of the other FEMP remediation projects (i.e., those addressing the remedies for Operable Units 2, 3, 4, and 5). In general, as discussed below, these remediation projects are aligned with the operable unit definitions contained within DOE's Amended Consent Agreement with the US EPA. The principal exception is the Soil Remediation Project, which includes the scope of the OU2 ROD. The Soil Remediation Project also includes the remediation of contaminated soils, which is a component of the selected remedy of the OU5 ROD. Reference is made to either the operable unit or to the project designation, whichever is more appropriate.

A general integration issue relates to the need to factor into the OU1 remediation facility design the coordinated shipment of materials from other remediation projects. Specifically, other remediation projects, such as the Soil Remediation Project and the Facilities D&D Project, have identified the potential shipment of materials off site, possibly by rail.

Another general integration issue concerns the need to coordinate remediation activities among the remediation projects so as to best control and prevent the spread of contamination (e.g, site-wide integration of vehicle travel paths, most appropriate placement of rail lines, etc.).

Soil Remediation Project

This project includes the scope of activities identified in the OU2 Record of Decision, including the removal of the source units (i.e., inactive flyash pile, sanitary landfill, etc.) within the operable unit, and all aspects of design and operation of the on-site disposal facility. In addition, the Soil Remediation Project includes the various components of the OU5 Record of Decision associated with the sitewide excavation of contaminated soils, disposition of those soils, and sitewide restoration activities.

A primary integration issue with respect to the Soil Remediation Project activities relates to constraints/limitations associated with the placement of soils in the on-site disposal facility. Specifically, as discussed in Appendix A of the OU1 Excavation Plan, residual contaminated soils, as amenable, will be placed in the on-site disposal facility. Appendix A provides information on constraints/limitations, as they currently exist, with respect to the attainment of contaminant-specific criteria, size criteria, etc., to be factored into the design to ensure such disposal can be performed. As the design of the on-site disposal facility progresses and these WAC are finalized, the OU1 design shall be revised, as necessary, to reflect any changes. In addition, in support of the on-site disposal facility design, the Waste Pit Remedial Action Project shall provide estimates of material volumes to be placed in the on-site facility as these estimates are developed.

The remediation of OU1 contaminated soils (including surface soils, contaminated soils from beneath the excavated waste pits, and some cover soils) shall be consistent with the selected remedy for contaminated process area soils in the OU5 ROD, as is discussed in Appendix A of the OU1 Excavation Plan. In this regard, Appendix A presents final remediation levels which reflect those presented in the OU1 ROD, as well as the OU5 final remediation levels. In accordance with details to be developed through the Soil Remediation Project design process, excavation will proceed until the remaining soils are below these final remediation levels. Such details will be incorporated into the OU1 remediation efforts as they are developed.

Disposition of the contaminated soils is also discussed in Appendix A of the OU1 Excavation Plan. Consistent with the planned OU5 remediation approach, excavated soils that meet the WAC for the on-site disposal facility will be disposed of therein. As these criteria are finalized, along with the methodology for ascertaining that they have been met, they will be reflected in the OU1 remediation approach. Until such time as the appropriate Soil Remediation Project design deliverables (addressing management of soils destined for the on-site disposal facility) are approved, soils management will be conducted consistent with the requirements of the US EPA-approved Removal Action 17 Work Plan. Soils that do not meet the WAC for the on-site disposal facility will be managed consistent with the management of OU1 waste materials.

The Soil Remediation Project is also responsible for other sitewide remediation efforts which shall be incorporated into the OU1 remediation approach as they are approved. Specifically, the Soil Remediation Project is responsible for sitewide design efforts associated with the development of final sitewide restoration: grading plans, wetlands mitigation, natural resources management, and ground and surface water monitoring.

The Soil Remediation Project is also responsible for the alignment of haul roads on site. This activity, which is currently under development, may create a geographic constraint for the OU1 remediation system design.

Facilities Decontamination and Dismantlement Project

The Facilities Decontamination and Dismantlement (D&D) Project includes the scope of activities identified in the preferred alternative for OU3, as identified in the December 1995 Draft Proposed Plan for OU3. OU1 remediation activities shall be coordinated with D&D activities being performed by the Facilities D&D Project so as to minimize constraints placed on the implementation of OU1 remediation efforts. For example, it is necessary to perform D&D of the low nitrate tank earlier than has been planned by the Facilities D&D Project in order to ease a potential geographic constraint on the OU1 remediation system design.

Facilities D&D project personnel have participated in design reviews of the OU1 facility design as a part of the OU1 waste minimization effort. These reviews have resulted in significant reductions in the facilities to be dismantled after remediation of the waste pits is completed.

In support of the Facilities D&D Project planning effort, OU1 will provide updates of remediation facility needs to ensure an appropriate sequencing of the D&D. These remediation facility needs will specifically include the identification of the ongoing need for utilities, most of which originate from the former production area. These utility needs will be assessed against the D&D sequencing to identify constraints and limitations, and identify necessary work-arounds to ensure complete, uninterrupted utility services.

Fernald Residues Vitrification Plant Project

The Fernald Residues Vitrification Plant Project includes the scope of activities identified in the OU4 Record of Decision. For purposes of this discussion, this project also includes the Vitrification Pilot Plant.

The Vitrification Pilot Plant has extended fire, potable water, treated water, and electrical service on Second Street into the Waste Pit Area. As part of the overall utilities coordination efforts, the capabilities of these systems to support all or a part of the OU1 remediation facility needs shall be assessed.

Pursuant to the Final Safety Analysis Report (FSAR) for the Vitrification Pilot Plant facility, a geographical constraint of 200 meters from this facility has been established, within which no regularly occupied facilities may be established without a revision to the OU4 FSAR.

Aquifer Restoration Project

Ongoing groundwater remediation for the Aquifer Restoration Project will include installing recovery wells and pipelines in the Waste Pit Area; this work will be coordinated with the OU1 remediation system design.

The Aquifer Restoration Project is responsible for assessing the capabilities of the FEMP's wastewater treatment system. Stormwater and process wastewater collected during OU1 remediation facilities operation will be sent to the FEMP wastewater treatment system via the Biodenitrification Surge Lagoon for processing. The treatment of the additional volume of wastewater will be assessed and coordinated with the operation of the FEMP wastewater treatment system. To avoid overflowing at the Biodenitrification Surge Lagoon, the proposed OU1 stormwater management system retention basin outlet controls will be integrated with the Biodenitrification Surge Lagoon level indicators. The wastewater from pit remediation activities will also be analyzed to determine whether pretreatment is necessary prior to transport to the FEMP wastewater treatment system, so as to ensure that the FEMP National Pollutant Discharge Elimination System (NPDES) permit limits and conditions can continue to be met.

1.1.4.2 Tie-in to Site Utilities and Infrastructure

Utilities required by the OU1 remediation facilities will be tied into existing site utilities which have adequate capacity for the additional load and whose availability is consistent with the long-term remediation needs of the site. Specifically, although a tie-in to the closest existing utility may seem most advantageous, the FEMP's long-term remediation goals may dictate that this utility be relocated, thereby requiring that another tie-in be utilized or that an alternative be designed. As the utility needs of OU1 are coordinated with other remediation projects and assessed against the long-term D&D strategy, specific utility tie-in locations will be factored into the design of the OU1 remediation facilities.

Utility needs for the OU1 processing facilities will include natural gas, electric power, fire protection water, and treated water for process use. No potable water supply or sanitary sewer system needs have been identified for the processing facilities themselves. Wash or bathroom facilities for the project will be provided within the support trailers for the remedial action, which have already been installed. Potable water will be provided to any fixed facility within the OU1 remediation facility, where feasible, for eyewashes and safety showers. A tie-in source for this potable water is at the northeast corner of the new Change Out Facility. Portable eyewashes/safety showers will be used processing facilities and in the waste pits and in remote areas of the processing facility where permanently installed potable water supply is not appropriate. The *Estimate of Utility Requirements* (PARSONS 1996c) discusses utility requirements in more detail.

Natural Gas

Natural gas will fuel the dryer. A new natural gas line is being constructed and will be located on a pipe rack east of Building 51 (FEMP wastewater treatment system). This new line will have sufficient full load capacity to support two dryers.

Electrical

Electrical power for the facility will be from a unit substation(s) connected to the FEMP 13.2 kV distribution system. Unit substation(s) will be sized according to the facility loads.

A standby diesel generator will be provided for process backup power. No safety class equipment requiring generator backup is anticipated. The generator capacity will be sized based on the loads to be served and will start automatically.

Lighting will be provided both in enclosed facilities and for outside areas as required. Lighting levels shall be determined consistent with Illuminating Engineers Society (IES) Handbook values and anticipated occupancies and uses and shall be consistent with OSHA hazardous waste operations lighting requirements in 29 CFR 1910.120. Battery-backed lighting for emergency egress will be provided. Fire detection and

alarm systems and evacuation systems will be provided with ties to the FEMP sitewide fire and evacuation systems. The *Estimate of Utility Requirements* (PARSONS 1996c) provides a discussion of electrical utilities.

Fire Protection Water

Tie-ins to existing utilities for fire protection water will be underground.

Treated Process Water

Treated water, obtained from the existing FEMP system, is required for the following uses: debris washing at pitside; debris washing in the processing facilities; truck washing in the waste preparation area; dust control in the waste preparation and waste loadout area; scrubber makeup water; cooled and chilled makeup water; and general cleanup at various locations in the waste processing area. Whenever possible, recovered water and recycling are used to meet part of this need. The *Estimate of Utility Requirements* (PARSONS 1996c) discusses utility requirements in more detail.

Wastewater

Wastewater generated by the OU1 remediation activities will be sent to the FEMP wastewater treatment system, via the Clearwell and/or Biodenitrification Surge Lagoon, for treatment prior to being discharged to the Great Miami River. Wastewater disposition is discussed in more detail in Subsection 2.2.1.4.

Roadways

Access to the remediation area will be from existing site roadways. Road access to the OU1 area from the former production area currently occurs at Second Street. A construction gate entrance exists at the west side of Pit 5. The need for roadway improvements outside the remediation facility area will be defined and made part of sitewide integration.

Rail

On-site rail improvements planned in support of OU1 remediation activities are detailed in the *Description of On-Site Rail Improvements* (PARSONS 1996e) and include modifications to existing tracks, the addition of tracks and switches, the elimination and/or upgrading of crossings, and the construction of miscellaneous facilities to support rail shipping activities.

1.1.4.3 Waste Drying Capacity

The primary process component of the OU1 remediation facilities will be a single indirect-fired rotary dryer, sized to operate at a wide range of processing rates (within maximum practical limits). The two primary capacity limiting factors for this dryer will be a moisture removal rate of approximately 4.2 tons per hour and a raw waste (wet) feed rate of approximately 22 tons per hour. The size of the dryer will be based on the largest proven commercially available dryer. These estimated rates will be verified by the selected dryer manufacturer.

1.1.4.4 OU1 Remediation Facilities System Capacity

The design will provide for a single-dryer facility that can effectively process a large range of waste throughput volumes. However, the facilities design will allow for the addition of a second dryer with similar dimensions and capacity as the first dryer. The expansion area for the second dryer shall be sufficient for the dryer, dryer feeder and discharge mechanism, and dryer off-gas system. The waste auger mixer that will be directly connected to the discharge of the first dryer will be common to both dryers. The actual need for the second dryer will be evaluated as the project progresses, and constraints and conditions change.

The waste preparation and loadout facilities will be sized to match the current anticipated maximum throughput. Addition of a second dryer will not necessarily require expansion of these facilities; however, the facilities will be laid out such that some expansion is possible. The areas designated for expansion will be kept clear of process equipment and utilities.

The initial design will accommodate subsequent expansion with minimal interference to ongoing waste processing operations. For those portions or components of the system that cannot later be readily or efficiently expanded, the design will reflect anticipated full-scale operations. The full capacity operations that will be in the initial system design are waste preparation, blending, and loadout areas.

1.2 Description of Selected Remedial Alternative

According to the ROD for OU1 (DOE 1995a), the selected remedial alternative includes excavation of the waste pit contents, waste processing and treatment by thermal drying (as necessary to remove free water), and off-site disposal at a PCDF. The selected remedy consists of the following key activities:

1) Construction of waste processing and loading facilities and equipment.

2) Removal of water from open waste pits for treatment at the site's wastewater treatment facility.

3) Removal of waste pit contents, caps, and liners, and excavation of surrounding contaminated soil.

4) Confirmation sampling of waste pit excavations to verify achievement of remediation levels.

5) Pretreatment (sorting/blending/shredding) of waste.

6) Treatment of the waste by thermal drying as required to meet the WAC of the disposal facility.

7) Waste sampling and analysis prior to shipment to ensure that the WAC of the disposal facility are met.

8) Off-site shipment of waste for disposal at a PCDF. It is estimated that over 600,000 cubic yards of waste material will be excavated and disposed of as low-level radioactive waste.

9) As a contingency, shipment of any waste that fails (due to radiological concentrations) to meet the WAC of the PCDF (up to 10 percent of the total waste volume) for disposal at the NTS.

10) Decommissioning and removal of the drying treatment unit and associated facilities as well as miscellaneous structures and facilities within OU1. Oversized material that is amenable to the selected alternative for OU3 will be segregated from OU1 waste, decontaminated, and forwarded to OU3 to be managed as construction rubble. **This D&D activity is not in the scope of this document.**

11) Disposition of remaining OU1 residual contaminated soils consistent with selected remedies for contaminated process area soils as documented in the OU5 ROD. Any materials not amenable to the OU5 remedy will be disposed of as waste materials (i.e., shipped off site). **Specifics on soil excavation and management, confirmation sampling, and site restoration will be covered on a sitewide basis through the Soil Remediation Project design process.**

12) Placement of backfill into excavation, and construction of cover system. **Interim grading will be provided until final grading and restoration are defined through the Soil Remediation Project design process.**

The major components of this design project are waste retrieval, waste transfer, wastewater handling, waste preparation, shredding, thermal drying, process off-gas treatment, blending, loadout, and storage. The *Process Description for the Remediation System Design* (PARSONS 1996b) provides detailed descriptions of the major project components of the process and associated equipment.

77

1.3 Assumptions

The following subsections present the assumptions that will be used in the design of the OU1 remediation facilities. These assumptions will be verified during the design phase. For design purposes, the facility is considered a "Radioactive Solid Waste Facility" under DOE Order 6430.1A, Section 1324, as the facility will store and treat low-level radioactive solid waste.

1.3.1 Design Assumptions

1) The newly installed personnel support facilities, including restrooms, change rooms, and parking are considered adequate for the current operating strategy. Existing laboratory capability will be augmented by contract analytical services.

2) The design of feed preparation, blending, and loadout areas will not initially include measures to control radon emissions based on emissions calculations. However, field measurements will be taken during initial operations to verify the modeling results. If the field measurements taken during initial operation indicate that secondary confinement of radon is required, controls will be added accordingly.

3) Sample analytical turnaround time for the WAC confirmatory sampling will be less than 24 hours.

4) Analytical screening techniques (i.e., gamma spectroscopy, total metals, total semi-volatiles, total volatiles, and the microwave method for determining moisture content) are sufficiently accurate to determine if the waste will pass the PCDF WAC, even if the waste were to be subjected to more rigorous analyses (i.e., alpha spectroscopy, full TCLP, and oven drying.)

5) OU1 does not contain Resource Conservation and Recovery Act (RCRA)-listed wastes. In addition, post-treated waste are not expected to exhibit any hazardous characteristics, based on existing analytical results (e.g., from the RI), which have not indicated characteristic concentrations of contaminants, including metals, that exceed regulatory thresholds.

6) For volume calculation purposes, 1.5 feet of soil underlying the pit wastes will be considered contaminated above the WAC for the on-site disposal facility and will be disposed of at the PCDF or the NTS. It is assumed that the next 1.5 feet will meet the WAC for the on-site disposal facility. Variations of this assumption do not affect the design.

SECTION 2

DESIGN BASIS

2.1 Functional and Regulatory Requirements

2.1.1 Functional Requirements

The OU1 remedial action will consist of the components discussed in Subsection 1.2: waste retrieval, waste preparation, thermal drying and off-gas treatment, and dried waste blending and loadout. The functional requirements for the project components are presented below. From these functional requirements, the criteria in Subsections 2.2 and 2.3 were developed.

2.1.1.1 General Functional Requirements

1) Off-site shipment of waste will be coordinated on a sitewide basis, with OU1 as lead for rail shipment to the off-site PCDF.

2) Excavation and feed stockpiles will be maintained to facilitate continuous dryer operation.

3) The remediation of OU1 contaminated soils will be consistent with the selected remedy for contaminated soils in the OU5 ROD.

4) OU1 contaminated soils that exceed the WAC for the on-site disposal facility will be managed consistent with the management of OU1 waste materials.

5) Decisions for OU1 tie-in to existing site utilities will consider capacity and long-term availability.

6) The remediation facility will include provisions to allow for the future addition of an additional dryer and associated equipment.

7) Heating, Ventilation, and Air Conditioning (HVAC) systems shall be provided for buildings to prevent the spread of contamination, protect workers from airborne contamination, and create functional environments for workers and uninterrupted equipment operation.

8) Waste processing equipment air effluent shall be filtered/treated before release to the atmosphere to comply with all ARARs and substantive permitting requirements (discussed in Subsection 2.1.4). All air effluent shall be released through a stack. A continuous stack monitor is required to be installed on the stack.

9) Electrical power distribution, lighting, and fire and evacuation alarm systems of adequate capacity and configuration for the processes and facilities involved, and consistent with the FEMP systems into which they will be connected.

10) A standby diesel generator will be provided and sized for equipment that must operate (e.g., the dryer auxiliary drive) following a loss of power. The standby diesel generator will also provide for an orderly shutdown of operations. Additional equipment that may require standby operation will be identified in the design phase.

11) Mixed waste (RCRA hazardous and low-level radioactive) treatment will be handled by the PCDF or another FEMP facility. This system will not be designed to treat mixed waste.

12) All wastewater will be pretreated as necessary to allow settling of suspended solids prior to discharge into the FEMP wastewater treatment system.

13) Wastewater effluent will be coordinated with the FEMP wastewater treatment system to prevent overflow of the Biodenitrification Surge Lagoon.

14) To the extent practical, contaminated stormwater will be segregated from uncontaminated stormwater to minimize treatment volume.

15) Appropriate engineered controls will be included to meet environmental safety and health requirements. Engineered controls are preferred over administrative controls, when feasible.

16) Controls (e.g., planned path of vehicle travel) will be incorporated into the design to minimize and/or keep control over the spread of contamination.

17) All facilities shall be designed to provide for safety and ease of maintenance, and removal of equipment.

18) The remediation system will be designed with conscious attention to waste minimization (e.g., no structures or parts of structures will be constructed unless absolutely necessary to support the process or comply with ARARs).

2.1.1.2 Waste Retrieval

1) Airborne dust emissions shall be minimized or eliminated during pit excavation by meeting the criteria included in Ohio Administrative Code (OAC) 3745-31-05, which includes the use of Best Available Technology to control emissions.

80

2) Mechanical excavation will be the primary method of waste excavation to limit the subsequent waste dewatering that would be necessary if hydraulic excavation were used.

3) Large debris will be segregated from the waste in the pits to avoid excessive handling.

4) Stormwater controls shall be provided to control water runoff, minimizing the spread of contamination.

5) Excavated waste will be transferred to the process area using conventional material handling equipment.

6) Limited amounts of waste, that may be hydraulically excavated, shall be transferred from the pits to a tanker truck via hoses or pipes with secondary containment to minimize the spread of contamination during normal and potential abnormal operating conditions.

7) Facilities (i.e., truck washing area) and controls shall be provided at the exit of the contamination and controlled areas.

2.1.1.3 Waste Preparation

1) Metal debris (including uranium) and nonprocessable debris larger than 4 inches will be removed from the waste before drying. Uranium metal shall be handled and disposed of in accordance with site procedures.

2) Waste fed to the dryer will be shredded to ensure that all of the waste is less than 4 inches (diameter) to prevent damage to the dryer.

3) Wet material will be stored for a sufficient time to allow evaporation/drainage of excess water. Waste storage areas will be covered to prevent rainwater infiltration.

4) Wet material may be blended with dry material for ease of handling and to optimize dryer operating efficiency.

5) Dust suppression systems shall be used to minimize spread of contamination due to fugitive airborne emissions.

6) Clean soil below and adjacent to waste storage areas will be protected with impermeable liners or floors with drains and sumps to collect leachate or spills.

7) Waste will not be processed through the dryer or loaded into railcars until laboratory analysis indicates that the batch meets the WAC. Samples will be taken from daily batches of blended waste stockpiled in the dryer feed pile and analyzed to confirm that the waste meets the WAC for moisture content, radionuclide concentrations, and RCRA constituents. A batch of waste that fails the WAC analysis will be reblended with other waste from the pits and reanalyzed.

8) Waste that meets the PCDF WAC for moisture content and has little or no debris as received at the waste preparation area will be transferred directly to the final blending and loadout area. It will not be processed through the dryer.

2.1.1.4 Drying and Off-Gas Treatment

1) The dryer will be capable of accepting different types of feed.

2) The dryer will be designed to yield a product with 1 percent to 25 percent moisture content with a nominal design of 10 percent moisture content.

3) The size of the dryer will be based on the largest proven commercially available dryer.

4) An off-gas treatment system will be required to treat the process off-gases leaving the dryer to remove excess moisture, acid gases, volatile organic compounds, radon, and particulates before discharge to the atmosphere.

5) The relative humidity of the off-gas will be minimized to extend the operating life of the Medium-Efficiency Particulate Air filters, High-Efficiency Particulate Air (HEPA) filters, and future potential carbon beds.

2.1.1.5 Dried Waste Blending and Loadout

1) Dried waste may be blended with wet unprocessed waste using conventional earth-moving equipment to achieve optimum moisture content and to homogenize the waste to meet the WAC for the PCDF.

2) For planning purposes, the representative railcar is a gondola car which is expected to be loaded to a minimum of 90 tons and a maximum of 106.25 tons of product for economical transport.

3) Additional samples will be taken from the waste as it is loaded in the railcars. Some fraction of these samples may be analyzed to verify the in-process analysis before the unit train leaves the site. If this set of analyses disputes the pre-dryer analyses, more rigorous analyses (i.e., TCLP, alpha spectroscopy) will be performed on the waste. If these analyses indicate that the shipment

82 [redacted]

fails the WAC for RCRA constituents, then it will be shipped to the PCDF as a hazardous waste. If it fails the WAC for radionuclides, then it may be unloaded and reblended with other waste or averaged into the entire unit train shipment, depending on the concentration. The remaining samples will be retained to dispute or confirm the PCDF's analyses.

4) If a railcar is rejected at the PCDF and returned to the FEMP because its contents do not pass the WAC according to the PCDF, then the railcar will be unloaded in the load-out area. Unloading will be done with conventional earth-moving equipment during an off-shift. If this unloading results in the liner being incapable of containing the waste (i.e., if it is ripped or torn), it will be folded into the railcar and a new liner will be installed over it. The reject waste will be reblended with other pit waste until it satisfies the PCDF WAC.

5) The facilities shall be designed with provisions for dust suppression to minimize spread of contamination.

6) For bulk loading in railcars or containers, a liner shall be installed before waste loadout. At the end of loadout, the liner will be folded over and taped before the lid is installed.

7) Each railcar and container will be weighed, radiologically surveyed, and decontaminated (if necessary) to meet DOE and DOT requirements prior to leaving the loadout area.

2.1.2 Identification of Standards/Requirements

The FEMP has grouped activities associated with the environmental, safety, health, or business management issues of the facility into 24 functional areas. Each Standards/Requirements Identification Document (S/RID) identifies the activities and baseline requirements for a functional area. The program governing the FEMP S/RIDs considers the purpose of the project and the principal drivers, scope, objectives, and participants. The FEMP S/RID program identifies the baseline requirements for all functional areas that establish responsibilities and authorities under the contract with the DOE; determines the adequacy of these requirements; ascertains a baseline level of compliance with the requirements; and implements a maintenance program that will keep the program current as requirements or compliance levels change. The FEMP S/RIDs are included in *The Management Plan: FERMCO Policies and Requirements Manual* (FERMCO 1995a).

Subsection 3.2 of the Management Plan provides the Functional Area Interface Matrix, which identifies the appropriate interfaces between the various functional areas. The eight functional areas that do not interface with this design activity are not addressed in this DCD but are listed below.

1) Emergency Preparedness and Management
2) Maintenance

3) Operations
4) Human Resources and Industrial Relations
5) Project Control
6) Property Management
7) Public Involvement
8) Financial Management

Many of the requirements specified in the functional areas that interface with engineering design apply to programmatic activities to which the design process (as well as other site activities) must adhere. Since these S/RIDs are implemented by existing departmental procedures and site policies and do not directly affect the engineering design itself, they have not been included in the DCD but are listed below.

1) Configuration Management
2) Research and Development and Experimental Activities
3) Management Systems
4) Quality Assurance
5) Training and Qualification
6) Construction
7) Acquisition

The engineering design and remaining nine functional areas are being reviewed to determine those that will interface with the engineering design functional area are discussed in Subsections 2.1.2.1 through 2.1.2.9. In some cases, a portion of a functional area (e.g., security) is referenced if it pertains to design.

2.1.2.1 Engineering Design (S/RID No. 2)

The engineering design functional area encompasses the design aspects for projects ranging from major to minor modifications of existing SSCs, to the design of facilities, as well as demolition design work associated with any of the identified activities. This functional area applies to architect/engineers who are responsible for design of new facilities or facility modifications, as well as to the plant engineering role of facility operators for ongoing engineering support. The engineering design functional area includes the design process from conceptual design through start-up and preparation of project closeout documentation. As such, the engineering design S/RID is the primary S/RID governing the OU1 remediation system design and this DCD.

All the requirements in this S/RID are functional requirements for this design project, with the exception of the contractual requirements specified in Subsection 2.3.1 of the Management Plan, which are considered programmatic requirements. Specific design requirements, such as building codes and design standards, are discussed in Subsection 2.3 of this DCD.

84

DOE Order 6430.1A, Section 1324-2.1 (under Radioactive Solid Waste Facilities) states that "the design objective shall be to ensure that conservatively estimated consequences of normal operations and credible accidents are limited in accordance with the guidelines contained in Section 1300-1.4, Guidance on Limiting Exposure of the Public." Air modeling was performed to estimate particulate and radon emissions from the process. Results of the modeling are found in Appendix D.

2.1.2.2 Environmental Protection (S/RID No. 5)

The environmental protection functional area includes the requirements that are protective of human health and the environment. The basic elements of this functional area are:

1) Management and Organization
2) Staffing and Training
3) Monitoring, Surveillance, and Inspections
4) Permits, Pollution Control, and Prevention
5) Record Keeping
6) Reports and Notifications

The scope of the environmental protection S/RID includes programmatic and technical requirements, formal controls, and standards to ensure compliance with applicable laws and regulations. The requirements for environmental protection are specified in various statutes and regulations (Federal and State), DOE Orders, and related documents. The ARARs and To Be Considered (TBC) requirements for the OU1 remediation system design are addressed in this DCD in Subsection 2.1.3 and Appendix A. ARARs address environmental regulations and TBCs address guidance, proposed environmental regulations, and environmental-related DOE Orders.

2.1.2.3 Fire Protection (S/RID No. 6)

The fire protection functional area includes requirements for prevention of a fire or explosion; fire protection and suppression systems; and personnel safety during a fire. These requirements protect the environment, public, and workers from potential fires and prevent property loss.

All the requirements in the fire protection S/RID apply to this design project, with the exception of Subsection 6.4.4, Fire Protection of DOE Electronic Computer Data Processing System, and Subsection 6.4.5, Fire Protection for Portable Structures.

2.1.2.4 Nuclear and Systems Safety (S/RID No. 9)

The nuclear and systems safety functional area includes the administrative and technical activities that are required to protect the environment and health and safety of the public and to ensure the safe operations of DOE nonreactor nuclear and non-nuclear facilities. Within this scope are requirements for documented safety analysis and review, risk analysis, design, operating limits, facility changes, criticality analysis, and criticality alarm systems.

All the requirements in the nuclear and system safety S/RID are functional requirements for this design project, with the exception of the contractual requirements in Subsection 9.3.1 of the FERMCO Management Plan, which are programmatic requirements.

2.1.2.5 Occupational Safety and Health (S/RID No. 10)

Many of the occupational safety and health functional area requirements do not apply to this design project, as they are programmatic. 29 Code of Federal Regulations (CFR) 1910 and DOE Order 5480.4 requirements identified in Subsection 10.3 of the FERMCO management plan, are the only requirements in the Occupational Safety and Health S/RID that pertain to this design.

2.1.2.6 Packaging and Transportation (S/RID No. 12)

The packaging and transportation functional area requirements provide administrative controls and technical guidance for the shipment of all materials from the FEMP. The requirements from Subsection 12.3 of the FERMCO Management Plan that apply to this project are:

1) 10 CFR 71, "Packaging and Transportation of Radioactive Materials"

2) 49 CFR 173, "Shippers - General Requirements for Shipments and Packaging"

3) 49 CFR 174, "Carriage by Rail"

4) 49 CFR 178, "Shipping Container Specifications"

5) 49 CFR 213, "Track Safety Standards"

6) 49 CFR 215, "Railroad Freight Car Safety Standards"

7) DOE Order 1540.2, "Hazardous Materials Packaging for Transport"

86

8) DOE Order 1540.3A, "Base Technology for Radioactive Material Transportation Packaging Systems"

9) DOE Order 5480.3, "Safety Requirements for Radioactive Material Transportation Packaging Systems"

10) International Atomic Energy Agency, "Safety Series No. 6, Regulations for the Safe Transport of Radioactive Material"

2.1.2.7 Radiological Protection (S/RID No. 14)

The radiological protection functional area requirements identify the elements and programmatic controls necessary to demonstrate compliance with applicable Federal, State, and local laws and regulations, and DOE requirements, while ensuring the following:

1) Any radiation exposure of the work force or the public is maintained As Low As Reasonably Achievable (ALARA).

2) New facilities and modifications to existing facilities shall incorporate design features aimed at maintaining exposures (occupational and public) ALARA.

The requirements in the radiological protection S/RID (i.e., in Subsections 14.3 and 14.4 of the FERMCO Management Plan) that apply to this design project are listed below. Refer to the S/RID for the exact reference, including date, of the requirement.

1) 40 CFR 61, "National Emission Standards for Hazardous Air Pollutants"

2) American National Standards Institute (ANSI) N42.18 - 1980, "Specification and Performance of On-Site Instrumentation for Continuously Monitoring Radioactivity in Effluents"

3) DOE Order 5400.1, "General Environmental Protection Program"

4) DOE Order 5400.5, "Radiation Protection of the Public and the Environment"

5) 10 CFR 835, "Occupational Radiation Protection"

6) DOE Order 5480.11, "Radiation Protection for Occupational Workers"

7) DOE Order 5480.4, "Environmental Protection, Safety, and Health Protection Standards"

8) DOE/EH-0256T, "Department of Energy Radiological Control Manual"

2.1.2.8 Security (S/RID No. 15)

Appropriate levels of protection must be provided at DOE facilities to preclude the loss or theft of government property and to prevent acts of unauthorized access, theft, diversion, sabotage, espionage, or other hostile acts. These acts may cause unacceptable risks to national security or to the health and safety of DOE and contractor employees, the public, or the environment. Specific security requirements are primarily contained in the DOE Order 5600 Series. These directives were reviewed for applicability at the FEMP facility, and the resulting requirements are contained in the security S/RID.

The programmatic aspects of the security S/RID are not included as functional requirements for this design project. However, the design requirements (such as fencing, sign posting, surveillance equipment, etc.) are included and shall be incorporated into the design. Specific requirements in the security S/RID (i.e., identified in Subsection 15.3 of the FERMCO Management Plan) that apply are listed below.

1) 10 CFR 1046, "Physical Protection of Security Interests"
2) 41 CFR Chapter 101-20.103,"Physical Protection and Building Security"
3) DOE Order 5630.11A, "Safeguards and Security Program"
4) DOE Order 5632.6, "Physical Protection of DOE Property and Unclassified Facilities"

2.1.2.9 Environmental Restoration and Waste Management (S/RID No. 17)

The environmental restoration and waste management functional area requirements identify the elements and programmatic controls necessary to comply with applicable Federal, State, and local laws and regulations, and DOE requirements. This functional area includes the activities and requirements most directly associated with the FEMP mission - environmental restoration and waste management.

The requirements in the environmental restoration and waste management S/RID that are also ARARs or TBC requirements are functional requirements for this design project. The ARARs and TBC requirements are discussed in Subsection 2.1.3 and identified in Appendix A.

2.1.3 ARARs and TBC Requirements

Appendix A in the *Remedial Design Work Plan for Remedial Actions at Operable Unit 1* (DOE 1995b) contains the ARARs and TBC requirements for the selected remedial alternative for OU1. Tables A-1, A-2, and A-3 in Appendix A of this DCD provide all the OU1 ARARs and contain compliance strategies for each. Specifically, the compliance strategies presented in these tables identify how the ARARs and TBC requirements are addressed through the design. Implementation of ARARs will be documented in

88

the Remedial Action Work Plan; final demonstration of compliance with ARARs will be documented in the Remedial Action Report.

2.1.4 Substantive Permitting Requirements

Appendix B of the *Design Criteria Document for Operable Unit 1 Remedial Systems Design* discusses substantive permitting requirements for the Operable Unit 1 remedial action. Tables B-1 through B-4 of Appendix B provide detailed listings of specific substantive permitting requirements and reference the appropriate portions of this Pre-Final Design Package in which these requirements are addressed. Final demonstration of compliance with substantive permitting requirements will be provided in the *Remedial Action Work Plan.*

2.1.5 Waste Acceptance Criteria for Disposal Facilities

The subsections below provide the WAC for the on-site disposal facility, the representative PCDF (Envirocare), and the NTS, as it is expected that all three may be used in the remediation of OU1.

2.1.5.1 On-Site Disposal Facility

The premise of this section, is that there is potential that certain of the soils generated as a result of the OU1 remediation activities may be amenable to disposal in the on-site disposal facility, and to therefore provide a summary of the waste acceptance criteria which would apply to such placement. As indicated in Section 1.2, the selected remedy in the OU1 ROD includes a key component associated with the management of residual contaminated soils. Specifically, Item 11 of Section 1.3 addresses the management by OU5 of OU1 residual contaminated soils consistent with the selected remedy for contaminated process area soils as documented in the OU5 ROD. As discussed in greater detail in Section A.5 of the *Materials Management Plan*, the selected remedy for OU5 provides for on-site disposal of soils which meet the WAC for the on-site disposal facility. Accordingly, OU1 soils which meet the on-site disposal facility WAC, provided in Table 2-1, will be disposed of in the on-site disposal facility. Pursuant to the OU5 ROD, soil containing contaminants that are incompatible with the clay liners or the underlying native clays beneath the liners will not be allowed in the on-site disposal facility. In addition, through the identification of specific geographical areas in the OU5 ROD, where efforts will be made to identify and segregate for treatment (as needed) the soil that qualifies as RCRA characteristic waste, it is envisioned that no significant quantity of RCRA characteristic materials will be placed in the on-site disposal facility.

2.1.5.2 Permitted Commercial Disposal Facility

Waste Analysis and Acceptance

The selected representative PCDF's Waste Characterization Plan describes the procedures that the waste generator and the disposal facility must follow to characterize the waste and to verify acceptability of the waste at the facility. A partial list of the conditions in the facility's Radioactive Material License, which may affect acceptance of OU1 material, is presented on Table 2-2. (Note: Table 2-2 is not all inclusive. Refer to the actual license for a complete list of conditions.) The disposal facility is in the process of amending its disposal limits for specific radioisotopes. Table 2-3 provides the maximum radionuclide concentrations in waste for disposal at the PCDF.

Before waste shipment, the disposal facility requires submittal of a waste profile, (including laboratory analyses and completed forms) with five 2-pound or 1-liter analytic samples and one large (50 pound) physical sample to establish a baseline for future shipments. The physical sample is used to determine compaction ratios (Standard Proctor Test). The five analytical samples will be analyzed at the disposal facility's on-site laboratory. The five representative samples are intended to represent the range of expected concentrations of radionuclides. The collection should include two high concentration samples, two low concentration samples, and one intermediate concentration. Analytical results will be compared to the submitted waste profile for consistency. Subsequent waste shipments will be sampled for the facility's fingerprint analysis and for independent third-party analysis, to confirm received waste is within the range established by the preshipment sampling and analysis. Peak sampling values are permitted to be 10 times the bulk average values. About 6 months are expected to be required to gain initial acceptance for a waste stream (i.e., to perform the analytical tests and to verify consistency with the facility's license conditions).

Debris Content and Limitation

The PCDF's Radioactive Material License with the State of Utah defines the term "debris" as anything other than soil (see Table 2-2, Conditions 38, 42, and 43). In addition, debris shall not exceed 10 percent of the volume of the waste material, and no single piece shall be larger than 8 feet by 8 feet by 10 inches.

In accordance with its license, debris that does not meet the above specification is not acceptable for disposal at the disposal facility. If any such debris is received by the disposal facility, it can either return the debris to the shipper or process the debris to meet its license conditions at an additional cost.

90 [redacted]

Table 2-1 - On-Site Disposal Facility Waste Acceptance Criteria
(from Table 9-7 of the *Final OU5 ROD*)

Constituent of Concern	Maximum Concentration	Constituent of Concern	Maximum Concentration
Radionuclides (pCi/g)		**Organics (Cont.) (mg/kg)**	
Neptunium-237	3.12×10^{9}	Heptachlor epoxide[a]	*
Strontium-90	5.67×10^{9}	Hexachlorobutadiene[a]	*
Technetium-99	2.91×10^{1}	Methoxychlor[a]	*
Uranium, total (mg/kg)	1.03×10^{3}	Methylene chloride[a]	*
Organics (mg/kg)		Methyl ethyl ketone[a]	*
Acetone[a]	*	Methyl isobutyl ketone[a]	*
Alpha-chlordane	2.89×10^{0}	4-Nitroaniline	4.42×10^{-2}
Benzene[a]	*	Tetrachloroethane[a]	1.28×10^{2}
Bis(2-chloroisopropyl)ether	2.44×10^{-2}	Toluene[a]	*
Bromodichloromethane	9.03×10^{-1}	Toxaphene[a]	1.06×10^{5}
Carbazole	7.27×10^{4}	1,1,1-Trichloroethane[a]	*
Carbon tetrachloride[a]	*	Trichloroethene[a]	1.28×10^{2}
Chloroethane[a]	3.92×10^{5}	Vinyl chloride	1.51×10^{0}
Chloroform[a]	*	Xylenes[a]	*
Chloromethane[a]	*	**Inorganics (mg/kg):**	
1,1-Dichloroethane	*	Barium[a]	*
1,2-Dichloroethane[a]	*	Boron	1.04×10^{3}
1,1-Dichloroethene[a]	1.14×10^{1}	Chromium VI[a]	*
1,2-Dichloroethene[a]	1.14×10^{1}	Lead[a]	*
Endrin[a]	*	Mercury[a]	5.66×10^{4}
Ethylbenzine[a]	*	Silver[a]	*
Heptachlor[a]	*		

[a] RCRA-based constituent of concern.

* Denotes compounds that will not exceed designated Great Miami Aquifer action level within the 1,000-year performance period, regardless of starting concentration in the disposal facility.

Table 2-2 - Excerpts from the Selected Representative PCDF's Radioactive Material License

9. AUTHORIZED USE . . . The licensee shall not accept low-level radioactive waste generated outside the region . . . unless the provisions of Articles IV and V of the Compact are met. Before receipt of any such shipment, the licensee shall submit to the Utah Division of Radiation Control documentation evidencing compliance . . .

13. The maximum quantity of special nuclear material (enriched or fissile material) which the licensee may possess, undisposed of, at any one time shall not exceed: 350 gams of U-235, 200 grams of U-233, and 200 grams of Pu, or any combination of the . . .

14. License material . . . shall not be placed in a disposal cell unless it has been determined that the concentrations of radionuclides is approximately homogeneous within the physical form of the waste . . .

18 Radioactive waste containing free liquid shall not be accepted for disposal.

38. For the purpose of this license, debris is defined as any radioactive waste for disposal other than soils. Compactible debris is defined as: (A) having a gradation that will pass through a 4-inch grizzly and (B) as having a density greater (sic) than seventy pounds per cubic foot . . . . Contaminated materials, other than soil, not meeting either of these criteria are defined as noncompactible debris.

40. In-place bulk radioactive waste shall be compacted at a moisture content up to three percent above optimum as determined by the Standard Proctor Method ASTM D 698.

41. The licensee shall compact each lift to not less than 90 percent of optimum density.

42. All debris shall be less than 10 inches in at least one dimension, and no longer than 8 feet in any dimension.

43. A lift or any portion of a lift shall be limited to less than 10 percent by volume of debris and the debris shall be uniformly distributed throughout the lift. However, noncompactible debris in the form of concrete, stone, or metal may be placed in the lift up to 25 percent by volume, of the total lift, uniformly distributed throughout . . .

52B. Waste containing more than 0.1 percent chelating agents by weight must be identified . . .

53. The licensee shall not accept radioactive waste for storage and disposal unless the licensee has received a complete "Radioactive Waste Shipment and Disposal Record," (Form #E-100) from the shipper.

Table 2-3 - Selected Representative PCDF Waste Acceptance Criteria

Radioactive Material	Maximum Concentration In Waste for Disposal (pCi/g)
Americium-241	2.3×10^{2}
Cobalt-60	3.6×10^{2}
Cesium-137	5.6×10^{2}
Lead-210	2.3×10^{5}*
Polonium-210	2.0×10^{4}
Radium-226	2.0×10^{3}*
Radium-228	1.8×10^{3}
Radium-228 (1 year)	1.2×10^{3}*
Radium-228 (5 years)	6.7×10^{2}*
Radium-228 (10 years)	5.6×10^{2}*
Strontium-90	2.0×10^{4}
Thorium-230	1.5×10^{4}
Thorium-232	6.8×10^{2}*
Uranium-234	3.7×10^{4}
Uranium-235	7.7×10^{2}
Uranium-236	3.6×10^{4}
Uranium-238	2.8×10^{4}
Uranium-natural	1.8×10^{4}
Uranium-depleted	1.1×10^{5}

* Daughters are assumed to be present at same concentrations in equilibrium.

Moisture Content and Limitation

The PCDF imposes a minimum moisture content of about 5 to 7 percent to minimize dust generation. This requirement is not known to be specifically related to the PCDF's license, but is waste stream-specific to facilitate waste handling by the facility. The OU1 waste treatment process is designed to generate a treated waste product near optimum moisture content. The maximum acceptable moisture content (Table 2-2, Condition 40) is ± 5 percent of optimum, as determined by the Standard Proctor test. Additionally, no free liquid is allowed in the waste.

2.1.5.3 Nevada Test Site

Material that does not meet the PCDF's radionuclide WAC will be disposed of at the NTS. Before any waste material leaves the FEMP, the waste will be analyzed to ensure compliance with the NTS WAC and requirements for waste certification and transfer under NVO-325. NVO-325 (NTS Defense Waste Acceptance Criteria, Certification, and Transfer, NVO-325 [Rev 1]) provides the NTS process for application approval, waste characterization, waste certification, exemption requests, and waste transfer. The criteria under NVO-325 apply to all defense radioactive wastes received at NTS for storage or disposal. Waste acceptance criteria are consistent and in compliance with DOE Order 5820.2A and all applicable federal, state, and local regulatory requirements. NTS may only accept waste from generators designated by DOE-Headquarters and approved by DOE-Nevada Office of Operations (DOE-NV).

Prior to shipping waste to NTS, the generator must complete the application process and obtain approval from DOE-NV to ship. The application includes general items such as facility location, operating information, and organizational charts, plans for waste handling and traceability, waste minimization plan, and funding, as well as specific information on the waste streams to be disposed at the facility. Once the application is approved, changes or additions to the application can be made. DOE-NV also conducts annual audits on the shipping facility to ensure compliance with their waste acceptance criteria.

A partial list of NTS WAC is presented in Table 2-4. (Note: The criteria presented in Table 2-4 are not all inclusive. Refer to NVO-325 for the complete list of criteria.)

Waste Characterization

As part of the NTS waste acceptance criteria, a generator is required to demonstrate compliance with 40 CFR 261 through 268 (that the waste is not regulated as a RCRA hazardous waste); and to provide information required under DOE Order 5820.2A for a performance assessment of the waste disposal site.

NTS will not accept waste regulated as hazardous under RCRA or wastes containing 50 ppm or more of polychlorinated biphenyls under the Toxic Substances Control Act. Process knowledge and/or sampling and analysis may be used to demonstrate compliance with these requirements. NTS requires the generator to submit a sampling and analysis plan for approval prior to shipping waste to the facility.

Table 2-4 - Excerpts from the NTS Waste Acceptance Criteria

Packaging for radioactive waste must meet DOT (49 CFR 173) and NRC (10 CFR 71) requirements for LSA, Type A, and Type B packages.

Only low activity LLRW will be accepted in bulk. Bulk waste will be contained such that personnel can unload waste without contaminating personnel and equipment. Bulk waste must meet the requirements of 49 CFR 173.425. Bulk waste containers may be returned to the waste generator.

The quantity of radioactive material in a package shall be limited to the extent that the effects of nuclear decay eat will not adversely affect the physical integrity of a package or (its contents)...(49 CFR 173.442)

The package closure shall not be breached under normal handling conditions and shall not be the weakest structural element in the package.

Packages shall be capable of supporting a uniform distributed load of 4,000 psf on any of the surfaces. (Sea/land containers, steel drums and bulk waste are exempt.)

All waste packages shall be provided with permanently attached...auxiliary lifting devises to allow handling by means of forklifts, cranes, or similar equipment. ...lifting devises on the package must not inhibit stacking of the packages. Lifting devices must have a 5:1 safety factor...

DOE-NV recommends that 4 ft by 4 ft by 7 ft or 4 ft by 2 ft by 7 ft (width, height, length) boxes or 55-gallon steel drums be used. Other size containers are acceptable with approval of DOE-NV.

NTS imposes limits of 9,000 lbs. per box and 1,200 lbs. per drum. Packages exceeding these limits...(need approval) and must be shipped in...(certain types of) trailers.

Waste packages shall utilize package volume in such a fashion...(to maximize packing) efficiency.

Use of Type A packaging not evaluated under the DOE Type A Package Certification Program will not be permitted.

Radioactive gases shall be...so that pressure does not exceed 1.5 atmosphere at 20 degrees C. Compressed gases (49 CFR 173.300) will not be accepted.

The external radiation levels for packages shall not exceed 200 mrem/hour on contact (49 CFR 173.411). DOT regulatory exceptions will be acceptable on a case by case basis. Type B containers that require remote handling will be addressed on a case by case basis.

All packages shall be marked with a unique package identifier. Bar coding denoting shipment, package, and waste stream identification required. bulk waste shipments must be accompanied by appropriate waste identification documentation.

Fine particulate waste shall be immobilized so that the package contains no more than 1 per cent (by weight) of less than 10-micron diameter particles or 15 percent (by weight) if less than 200-micron diameter particles. When immobilization is impractical, the package shall include a sealed liner and be over-packed.

Radioactive-contaminated asbestos capable of giving off friable asbestos dust must be wetted with water and surfactant and stored in double plastic bags having a combine wall thickness of at least 6 mil...must be overpacked in leak-resistant metal or wood containers. Sea/land containers containing radioactive asbestos will be considered on a case by case basis. Any regulated asbestos waste must be segregated into a separate stream.

Each waste package shall be prepared for shipment so as to minimize damage during transit. Preshipment storage shall be controlled to avoid adverse effects of weather.... The accumulation of moisture on or in the packages...shall be avoided. Each waste container shall be provided with tamper indication devices once all certification actions have been taken.

Table 2-4 - Excerpts from the NTS Waste Acceptance Criteria (Continued)

Minor liquid residue...(is) acceptable. In no case shall free liquid content exceed 0.5 percent (by volume). May use Method 9095 (Paint Filter Test) to demonstrate compliance. LLRW containing pathogens, infectious wastes, or other etiologic agents (49 CFR 173.386) will not be accepted. LLRW containing chelating or complexing agents at concentrations greater than 1 percent (by weight_ will not be accepted.

Waste Stream Information

NTS requires the generator to provide specific information for each waste stream that will be disposed at the facility. Physical data, such as particle size, moisture content, and waste form, and chemical data, such as radiological and hazardous constituents, must be provided for each waste stream being offered for disposal. The generator is required to submit a 3-year forecast summary for each waste stream to be shipped. The forecast must include information such as the waste stream, container type and size, number of shipments, and expected total volume to be shipped.

Waste Certification

NTS requires generators to develop a waste certification program to ensure all waste acceptance criteria are met. The program must be documented in the Waste Certification Program Plan, which defines the generator's quality assurance program as it applies to waste certification and characterization. NTS requires the generator to designate a Waste Certification Official to certify that all waste acceptance criteria are met prior to shipment. The generator may also designate a package certifier, who must be independent of waste generation activities, and who certifies that the package to be shipped and its contents meet United States Department of Transportation (DOT), US EPA, and DOE-NV requirements.

2.1.6 Packaging Requirements

Packages for low-level radioactive material shall meet the requirements of 49 CFR 173.441. Each package, under conditions normally incidental to transportation, shall not exceed 200 mrem/hr at any point on its external surface. The transport index cannot exceed 10.

The transport index is a dimensionless number, rounded up to the first decimal place, that is placed on a package label to designate the degree of control to be exercised by the carrier during transportation. For the waste involved in this project, the transport index will be the maximum radiation level in mrem/hr at 1 meter from the external surface of the package.

Railcars containing radioactive material shall meet the requirements of 49 CFR 174, Subpart K, which requires that railcars be loaded in a manner that avoids spillage and scattering of loose material. The amount of low-level radioactive waste placed into a railcar cannot make the total transport index number greater than 50.

2.2 General Design Criteria

2.2.1 Requirements for Waste Streams

The following subsections identify the requirements for the six waste streams that will be generated during construction and operation of the OU1 remediation facilities. These streams include:

1) Unprocessed pit waste, soil, and debris
2) Processed pit waste, soil, and debris
3) Air discharges
4) Wastewater
5) Miscellaneous

2.2.1.1 Unprocessed Pit Waste, Soil, and Debris

It is anticipated that some of the pit waste, soil, and debris will meet the PCDF's WAC without having to be processed (blended and/or dried). This material will be taken directly to the loadout area or will be used as blend material for waste that does not meet the WAC. Soil that meets the WAC for the on-site disposal facility will also bypass the process and will be taken directly to the OSDF. The exact location of the receiving area and the delivery schedule will be coordinated with SRP.

2.2.1.2 Treated Pit Waste and Debris

Pit waste, soil, and debris from the waste pit excavation that does not meet the PCDF WAC will be sized reduced, blended, and dried. The WAC for the PCDF is described in Subsection 2.1.5.2.

2.2.1.3 Air Discharges

Remediation activities will produce fugitive and point source emissions of air contaminants. The open excavation, waste transfer activities, and waste stockpiles will produce fugitive emissions, while the dryer will be the only point source. Section 2 and Table B-1 of Appendix B describe the substantive permit requirements for air contaminant sources.

In general, employing Best Available Technology (BAT) will apply to all fugitive and point source emission sources as required by the Ohio EPA's permit to install and permit to operate. Using BAT covers all toxic, particulate, and radiological emissions except radon emissions from point sources. Radon emissions from the dryer shall meet a stack limit based on a maximum allowable off-site impact of 0.5 pCi/L annual average. Radioactive dose limits are federally enforced under NESHAP, Subpart H.

Concentrations of air toxics, particulates, and radon in the dryer off-gas were determined by PARSONS using METSIM simulation software. These data were used by FERMCO to model the concentrations of these substances at specific receptor locations to determine stack limits. The stack limits for individual compounds are presented in Appendix D. These limits are based on specific stack configurations, off-gas volumes and velocities, and the METSIM data. If any of these variables change, the stack limits will also change.

2.2.1.4 Wastewater

Wastewater generated by the OU1 remediation activities will be treated at the FEMP wastewater treatment system prior to discharge to the Great Miami River via manhole 176B. The FEMP NPDES permit governs the discharge from the FEMP wastewater treatment system. All OU1 wastewater is either transferred directly to the Biodenitrification Surge Lagoon or indirectly via the Clearwell prior to entering the FEMP wastewater treatment system.

The five types of wastewater streams generated by the remedial action are waste pit surface water, excavation water from the waste pit area (which includes storm and drainage water), process wastewater, decontamination water, and stormwater from the process area. These wastewater streams are described in detail in the *Process Description for the Remediation System Design* (PARSONS 1996b).

Additional pretreatment (other than removal of suspended solids) of the wastewater may be necessary depending upon the WAC for the FEMP wastewater treatment system. This WAC is currently being developed. As this WAC is finalized, and the sampling and analysis plan is developed to ensure compliance with this WAC, details regarding these sampling requirements will be incorporated into the design.

Wastewater shall be managed in accordance with the ARARs identified in Appendix A. In addition to the ARARs, stormwater controls are discussed in Subsection 2.3.5.3 of this DCD as well as the *Waste Excavation Plan for the Operable Unit One Remediation System Design* (PARSONS 1996d).

98

2.2.1.5 Miscellaneous

Other waste streams that will be generated during remedial activities involve contaminated personal protective equipment and spent activated carbon. Other streams and their disposition will be identified during design.

2.2.2 Human Factors

The appropriate human factors technology will be considered in the design, operation, and maintenance of DOE nuclear facilities. The human factors safety design considerations shall be documented as required by the draft 10 CFR 830.110 and in accordance with FEMP Procedure SA-DPT-004.

2.2.2.1 Equipment Labeling

Equipment and any parts of the equipment to be used by personnel shall be identified with appropriate labels. The labels shall clearly and concisely indicate the function and purpose of the item being labeled, and the use of abbreviations and/or acronyms shall be minimized. Permanent labels shall be attached so that environmental conditions or usage by personnel will not remove the labels or render them illegible.

2.2.2.2 Workplace Environment

In enclosed buildings, an effective climate control system shall be designed to maintain temperature and humidity at an acceptable level and compatible with the work being performed in enclosed buildings. Acoustic design shall minimize the noise level to ensure that the limits of DOE Order 5480.10 and 29 CFR 1910.95 are not exceeded, verbal communications are not impaired, and auditory signals are readily detectable. Also, auditory distractions that can lead to operator fatigue shall be minimized.

Proper means of egress shall be provided to ensure that workers have an unobstructed path to an exit. The path to an exit shall have a width greater than 3 feet, and a height greater than 7 feet, 6 inches. For overhead equipment hanging in a path of egress, the allowable clearance is 6 feet, 8 inches. Fall protection shall be provided in any areas that exceed 4 feet in height and are accessible to personnel.

Portable eyewash stations and safety showers shall be provided, where required.

2.2.2.3 Lighting

Adequate lighting levels shall be provided in all work areas, with glare and/or shadowing conditions avoided wherever possible. When appropriate, lighting design shall consider environmental effects and ensure adequate lighting intensities. Levels shall be consistent with IES Handbook values.

2.2.2.4 Operating Panels and Controls

The arrangement of controls and displays on control panels shall be designed to promote efficient use of task-related components, rapid location of a given component, and maximum operator awareness of plant conditions; and to limit the potential for operator error.

2.2.2.5 Warning and Annunciator Systems

Warning systems shall alert personnel to abnormal conditions and provide sufficient time to respond to annunciated warnings. All warning systems shall be capable of being tested periodically. Standard audible signals shall be used for common nuclear facility events (fire, severe weather) as required by the FEMP and national standards. These systems will be tied into the FEMP sitewide systems.

2.2.2.6 Communication Systems

The communication system will permit users to transmit and receive information accurately and conveniently, with a minimum of distractions from the user's other tasks. This system will be tied into the FEMP sitewide system. A Giatronics®, or similar, type communications system will be available for emergency communications throughout the waste pit area.

2.2.3 General Nuclear, System Safety, and Worker Protection Requirements

The OU1 remediation facilities shall be designed based on the requirements of a nonreactor nuclear facility under DOE Orders. Hazard category calculations for the waste processing operations indicate that this facility is less than Hazard Category 3 as defined in DOE Order 5480.23, "Nuclear Safety Analysis Reports," and DOE-EM-STD-5502, "Hazard Baseline Documentation." By definition, the SSCs associated with waste processing can be Performance Category 2 at most (DOE-STD-1021-93, "Natural Phenomena Hazards Performance Categorization Guidelines for SSCs"), unless upgraded to a higher performance category by FERMCO or DOE management.

Health and safety performance objectives to be achieved in the design of DOE facilities include:

1) Protection of the public and all personnel from injury and from exposure to toxic materials, radiation, and other hazards in accordance with DOE requirements and allowable limits

2) Protection of private and public property against damage resulting from DOE operations

3) Continuation of operations by minimization of accident potential

100

4) Limitation of loss or damage to Federal property, including losses associated with the inability to readily decontaminate or decommission facilities for other subsequent uses

5) The waste process and excavation areas will be a contamination area with a controlled access point

2.2.3.1 Radiation Dose Limits

Table 2-5 provides a summary of occupational radiation dose limits and control levels. Dose rates will be modeled during design to demonstrate compliance with FEMP Control Levels (which were developed to ensure the DOE levels are not exceeded as well as keeping exposures ALARA), and ARAR limits identified in Appendix A.

Table 2-5 - Summary of Radiation Dose Limits and Control Levels

	DOE	DOE Admin. Control Level	FEMP Control Level
Whole Body	5 rem/yr	2 rem/yr	1 rem/yr
Extremities	50 rem/yr	n/a	10 rem/yr
Skin and Other Organs	50 rem/yr	n/a	10 rem/yr
Lens of Eye	15 rem/yr	n/a	3 rem/yr
Embryo/Fetus	500 mrem/gestation period	n/a	400 mrem/gestation period

Operations must be in accordance with the requirements of DOE Order 5400.5, Chapter II involving the DOE public dose limit for all exposure modes and the DOE sources of radiation. The total effective dose equivalent to members of the public is limited to 100 mrem/yr, excluding radon. Radon may be encountered in some of the pits. Therefore, controls for radon emission will be evaluated during detailed design.

2.2.3.2 Facility Design - External Exposure

10 CFR 835.1002 states that optimization methods shall be used to ensure that occupational exposure is maintained ALARA in developing and justifying facility design and physical controls. Also, the design objective for controlling personnel exposure from external sources of radiation in areas of continuous occupational occupancy (2,000 hours per year) shall be to maintain exposure levels below an average of 0.50 mrem per hour and as far below this average as is reasonably achievable. The facility shall be

divided into separate areas for limited access (dose rates less than 0.50 mrem/hr) and restricted access (dose rates greater than 0.50 mrem/hr). The design objectives for exposure rates for potential exposure to a radiological worker, where occupancy differs from the above, shall be ALARA and shall not exceed 20 percent of the applicable standards in 10 CFR 835.202.

Preliminary calculations have indicated that shielding will not be required. This will be confirmed during design. Required shielding shall be designed to limit the total external dose to less than 20 percent of the annual DOE exposure limit values (1 rem/yr) as specified in 10 CFR 835. Projected dose rates will be based on occupancy, duration, and frequency of exposure, and shall not exceed 1 rem/yr as specified in 10 CFR 835. This may require that shielding be provided for areas requiring normal and intermittent access, such as those for preventive maintenance, component changes, or operation/adjustment of systems and equipment. The characteristics of the radiation, structural requirements, flammability requirements, and radiation damage potential will determine the type of shielding. Shielding shall also be installed to minimize nonpenetrating external radiation exposures to the skin and lens of the eye, where required. In most cases, confinement barriers or process equipment provide this function. Where shielding is an integral part of the facility structure, it shall be installed to at least the same level of natural phenomenon qualification as the facility structure.

2.2.3.3 Facility Design - Internal Exposure

10 CFR 835.1002 requires that to control airborne radioactive material, the design objective shall be, under normal conditions, to avoid releases to the workplace atmosphere, and in any situation, to control the inhalation of such material by workers to levels that are ALARA. Control of internal exposures shall be through the use of confinement and ventilation. Eating, drinking, and smoking shall not be allowed in the remediation facilities. In addition, the facilities shall be designed to ensure that the routine use of respirators is not required by on-site personnel during normal facility operations.

2.2.3.4 Codes, Standards, and Regulations

The following will be used as guidance during the design of the OU1 remediation facilities:

1) RM-0021, Safety Performance Requirements Manual (FEMP document)

2) DOE Order 5400.1, "General Environmental Protection Plan"

3) DOE Order 5400.5, "Radiation Protection of the Public and Environment"

4) DOE Order 5480.10, "Contractor Industrial Hygiene Program"

5) 10 CFR 835, Occupational Radiation Protection

102

6) DOE Order 5480.11, "Radiation Protection for Occupational Workers"

7) DOE/EH-0256T, Radiological Control Manual

8) DOE Order 6430.1A, "General Design Criteria"

9) 29 CFR 1910, Occupational Safety and Health Standards

10) 29 CFR 1926, Safety and Health Regulations for Construction

11) American Concrete Institute (ACI) 349, Code Requirements for Nuclear Safety Related Concrete Structures

12) American Nuclear Society (ANS) 6.4, Guidelines on the Nuclear Analysis and Design of Concrete Radiation Shielding for Nuclear Power Plants

13) ANS 6.4.2, Specifications for Radiation Shielding Material

14) ANSI N13.1, Guide to Sampling Airborne Radioactive Materials in Nuclear Facilities

15) DOE-STD-1021-93, Natural Phenomena Hazards Performance Categorization Guidelines for Structures, Systems,and Components

16) DOE-STD-1027-92, Hazard Categorization and Accident Analysis Techniques for Compliance with DOE Order 5480.23, "Nuclear Safety Analysis Reports"

17) DOE Order 5480.23, "Nuclear Safety Analysis Reports"

18) DOE Order 5480.28, "Natural Phenomena Hazards Mitigation"

19) DOE-EM-5502-94, Hazard Baseline Documentation

20) RM-0020, Radiological Control Requirements Manual (for activities at the FEMP)

2.2.4 Security

Special security and safeguard measures do not directly apply to the OU1 Remediation System Design because the facility will not process special nuclear material. However, some security and safeguards may be required based on the facility's hazard category. The hazard category, and the required security and safeguards, will be confirmed during design.

Fencing will be limited to that required for safety, physical security, and activity control. Temporary fencing will be used during construction. Radiation control fencing will also be provided. Existing fence material that is to be removed will be salvaged for re-use. New fences and hardware shall be standard chain-link fabric with three strands of barbed wire, with a total fence height of 8 feet. The integrity of site perimeter security fencing shall be maintained. DOE and FEMP standards for fencing shall be followed.

2.2.5 Geotechnical

Several geotechnical investigations have been conducted in the OU1 area. This section provides summary descriptions of the geological, hydrogeological, and geotechnical conditions of the OU1 area waste, and materials pertaining to the design of the preferred remedial alternatives, from the following data sources:

1) *Characterization Investigation Study Geotechnical Evaluation of Waste Pit Material Properties and Boring Logs* (Weston 1988)

2) *CRU-1 Cooperative Remedy Screening Program Final Report* (ALTER 1994)

3) *Remedial Investigation Report for Operable Unit 1* (DOE 1994b)

4) *Technical Summary of DEEP Test Data,* Revision 0 (PARSONS 1996a)

5) *CRU-1-Dewatering, Excavation, Evaluation Program: Waste Pits 1, 2, and 3,* (ALTER 1995a)

6) *CRU-1 Dewatering Excavation Evaluation Dewatering Program: Waste Pits 5 and 6* (ALTER 1995b)

The Dewatering Excavation Evaluation Program (DEEP) results will provide necessary geotechnical data. Geotechnical data evaluation from these sources is ongoing and will be used for the following general purposes:

1) Provide design parameters for the remediation facility foundation designs

2) Provide geotechnical data for analysis of slope stability and bearing capacity of equipment during waste pit excavation

3) Provide design parameters for road and pad design

4) Provide waste characteristic data for process design

The following sections discuss some of the specifics regarding OU1 geological conditions, hydrogeological properties, and geotechnical data collection and interpretation, as well as waste characteristics that influence design parameters.

2.2.5.1 Geological Conditions

The cross sections through OU1 presented in the Remedial Investigation (RI) Report (DOE 1994b) show that the glacial overburden is predominantly clay. Within the clay of the glacial overburden are lenses of coarse, nonplastic (NP) sediments, silt, sand, and gravel. These coarse-grained lenses have complex geometries and are difficult to correlate laterally without closely spaced borings.

Prior to construction of the waste pits, small tributaries to Paddys Run eroded surface features of the waste pit area. The waste pits are constructed above and below the original grade. The material that was used to make the above-grade additions was taken from local excavations in and around the waste pit area. Consequently, the fill above the original grade in the cross sections is clay- and silt-dominated strata typical of the glacial overburden.

2.2.5.2 Hydrogeological Properties

This subsection describes groundwater flow in the glacial overburden and in the Great Miami Aquifer at OU1. Groundwater exists in both perched and water table conditions beneath OU1. The groundwater level is seasonal and fluctuates between 518 feet and 522 feet.

Groundwater of the glacial overburden has a radial flow pattern in the area of the pits, with the exception of the Burn Pit. Based on groundwater level contours presented in the RI report, groundwater elevations beneath OU1 range seasonally from 518 to 522 feet above mean sea level. Seasonal variations in groundwater elevation are only a few feet in Waste Pits 1 through 4, but vary up to 10 feet in the Burn Pit (DOE 1994b).

Based on discussions in the RI (See Section 3.4 of the RI Report), horizontal groundwater flow within perched water zones in OU1 is limited in extent to areas of coarse-grained lenses. Two significant areas of coarse-grained lenses have been identified, on the eastern portion of Pit 4 and to the north and east of Pit 6. The potentiometric contours for Type 1 (1000-series) wells, indicates that perched water seepage could occur on the east side of Pit 4. The clay liners for Pits 1 and 3, and the EPDM liners for Pits 5 and 6 are effective low hydraulic conductivity zones or barriers. However, as demonstrated during the installation of the Pit 6 liner, water seepage into the excavation from the sand and gravel lens on the northeast corner of Pit 6 could occur once the liner is removed. Based on review of wet trenching activities in Waste Pits 1, 2, and 3, water seepage into test excavations, at the base of porous cap material, was observed. A probable source of the water is infiltration of rainwater through the cap

material. Perched water may be another source of water, but based on existing hydrological data is not likely.

Infiltration of surface water along Paddys Run into the Great Miami Aquifer affects local groundwater in the waste pit area. During the high precipitation seasons of winter and spring, there is more flow in Paddys Run, and stream water infiltrates into the Great Miami Aquifer, creating a groundwater mound centered beneath Paddys Run. This mounding may cause increased seepage into the waste excavation near Paddys Run Creek. During the dry season, there is relatively little recharge to the regional aquifer, the mound is not present (DOE 1994b).

2.2.5.3 Geotechnical Design Parameters

Geotechnical Investigations and Testing

Geotechnical testing continues to be conducted to evaluate the characteristics and geotechnical properties of the OU1 waste and surrounding berm materials. The latest results are found in the *Technical Summary of DEEP Test Data* (PARSONS 1996a).

In addition to the Clearwell, two of the waste pits have water on their surfaces: Waste Pit 5 (1 to 5 feet water) and Waste Pit 6 (2 feet of water). The Clearwell has 11 feet of water. The remaining waste pits have dry surfaces.

Table 2-6 summarizes geotechnical data by waste pit in two primary categories, the first representing geotechnical parameters used for the design basis for this DCD and the second containing a summary of data ranges from the five data sources listed in Subsection 2.2.5. Table 2-7 summarizes data from composited samples based on material type. Therefore, composited samples could be from different waste pits but of similar geotechnical classification.

Geotechnical data from the OU1 perimeter dikes can be found in the Waste Pits 3 and 5, and Clearwell Stability Analysis Report (PARSONS 1992). Geotechnical data for the proposed remediation facility foundation analysis and design can be found in the *Technical Summary of DEEP Test Data* (PARSONS 1996a). Geotechnical data needed to support material process design include moisture content and dry density. These data will be used to estimate the total amount of liquids and solids that must be handled as part of the waste pit remediation processes.

Table 2-6 - Summary of Geotechnical Data by Waste Pit

Parameters	Pit 1	Pit 2	Pit 3	Pit 4	Pit 5	Pit 6	Burn Pit	Clearwell
Parameters Used for Design Basis[1] Estimated Volume of Pit Materials (yds^3)	W=48,500 LC=19,900 S=5,212 T=73,612	W=24,200 LC=13,200 S=2,592 T=39,992	W=204,100 LC=103,400 S=13,702 T=321,202	W=55,100 LC=17,700 S=4,736 T=77,536	W=97,900 LC=0 S=9,581 T=107,481	W=9,600 LC=0 S=1,923 T=11,523	W=30,300 LC=0 S=2,210 T=32,510	W=3,700 LC=600 S=1,866 T=6,166
Wet Density (lb/ft^3)	114.5	82.7	80.0	131.7	71.8	148.3	122.0	104.0
Average Moisture Content (w)(% Dry Basis)	46.0	156.9	183.5	29.1	393.4	18.4	30.6	58.8
Optimum Moisture Content Goal (from Compaction Test) (%)	13	14	26	13	36	9	20	20
Major Types of Waste (USCS Group Name)	ML, ML (NP), GC (clayey gravel with sand), MH	ML (NP), MH, SM, SC (clayey sand with gravel), CL	SM, MH, ML, CL, ML (NP)	CL, ML (NP)	MH, ML, ML (NP)	ML (NP), SM	CL, MH, SM	ML, SM
Average Specific Gravity of Solids	2.98	2.71	2.66	3.12	2.80	3.18	2.76	2.74
Percentage of Material Less Than 200 Mesh (% Silt and Clay)	46-96	15 - 99	43 - 96	55 - 94	68 - 100	46 - 96	36 - 59	45 - 77
Undrained Internal Friction Angle (deg)	19 - 23	18	13 - 24	NA	15	NA	NA	NA

Table 2-6 - Summary of Geotechnical Data by Waste Pit (Continued)

Parameters	Pit 1	Pit 2	Pit 3	Pit 4	Pit 5	Pit 6	Burn Pit	Clearwell
Cohesion (psi) Undrained	4.9 - 6.7	1.7	0 - 2.4	NA	1.0	NA	NA	NA
Drained Internal Friction Angle (deg)	30 - 39	36	28 - 40	NA	32	NA	NA	NA
Cohesion (psi) Undrained	0 - 3.3	0.9	0.0 - 1.6	NA	0.7	NA	NA	NA

Notes:

LC = In Situ Volume of Cover and Liner

W = In Situ Volume of Waste

S = In Situ Volume of Soil (1.5 feet surrounding waste pits)

T = Total In Situ Volume to be processed and disposed of off-site (An additional 1.5 feet of soil surrounding the waste pits will be excavated and disposed of on site)

NA = Not Applicable

w = Moisture Content

Table 2-7 - Summary of Geotechnical Composite Samples by Material Type

	ML (NP1) Non-Plastic Silt 1	ML (NP2) Non-Plastic Silt 2	MH1 Elastic Silt 1	MH2 Elastic Silt 2	ML Silt	CL Clay	SM Silty Sand
Pit No.	1,4	5,6	5	2,3	6, Burn Pit	4	2, Clearwell
Standard Proctor Maximum Dry Density (from Compaction Test) (lb/ft^3)	116.6	76.9	64.5	77.8	99.0	118.4	102.3
Optimum Moisture Content (from Compaction Test) (%)	13.4	36.2	56.0	35.4	19.7	18.7	20.1

Pit Excavation Design Parameters

The following geotechnical parameters (determined as part of the DEEP) have been evaluated to determine the appropriate design of the waste pit excavation:

1) Cohesion
2) Internal angle of friction
3) Wet and Dry Density
4) Specific Gravity
5) Soil Classification
6) California Bearing Ratio (CBR)
7) Moisture content
8) Boring logs
9) Cone Penetrometer Test (CPT) logs
10) Compressibility or consolidation

Remediation Facility Foundation Design Parameters

The following geotechnical test parameters will be determined and analyzed to support the design of the remediation facility foundation:

1) Unconfined compressive strength
2) Consolidated, undrained triaxial compressive strength
3) Perched water conditions
4) Material classification
5) Standard Penetrometer Test data
6) Consolidation data
7) CBR
8) Compaction densities and optimum moisture content
9) Wet and dry density

2.3 Discipline-Specific Design Criteria

Each discipline will use the current revisions, as of the issue date of this DCD, of the codes, standards, and regulations listed in the following subsections.

110

2.3.1 Process

2.3.1.1 Responsibility

Process will have the responsibility of developing the project conceptual flowsheets, completing heat and material balances, performing initial process equipment sizing, and interacting with Material Handling and Mechanical Process.

Specifically, Process will have sole responsibility for the indirect rotary dryer and associated equipment, and all equipment contained in the treatment system. Process will have joint responsibility, with Material Handling and Mechanical Process, for all other equipment depicted on the flowsheets.

2.3.1.2 Codes, Standards, and Regulations

No specific codes and standards apply to Process design beyond the ARARs and those listed in the sections addressing Material Handling and Mechanical Process.

2.3.1.3 Design Criteria

Table 2-8 presents the design rates and operating periods for the remediation process. Actual operating rates will depend on the moisture content of the feed stock. Note that the dryer and shredder feeds will vary by material.

Table 2-8 - Process Parameters

Operation	Operating Times	Design Rates
Mechanical Excavation	8 hours/day; 5 days/week	847 tons/day
Waste Preparation Facility Production	16 hours/day; 5 days/week	820 tons/day
Dryer Feed	24 hours/day; 7 days/week	22 tons/hour
Dryer Product	24 hour/day; 7 days/week	20 tons/hour
Dryer/Mixer Product	24 hours/day; 7 days/week	484 tons/day
Water to Off-Gas System (Dryer Evaporation Rate)	24 hours/day; 7 days/week	4.2 tons/hour
Loadout	8 hours/day; 5 days/week	680 tons/day

Waste material will be stockpiled to provide surge capacities for downstream processes and to allow for drainage of any free-draining water. Waste shall also be stockpiled outside the process area to provide contingency for inclimate weather periods.

The off-gas treatment system shall remove steam, particulates, organic contaminants, and acid gases from the off-gas before release to the atmosphere in accordance with the required permit specified in Appendix B. Based on air modeling (Appendix D), control of radon emissions from the dryer off-gas will not be required. Fugitive emission sources of radon will be controlled using BAT. Entrained solids shall be removed by a cyclone and venturi scrubber. A packed tower scrubber with a caustic solution shall be used to remove acid gases. Off-gas condensers shall be used to condense water vapor from the off-gas, thereby reducing the volume of off-gas and its relative humidity, to prevent condensation in downstream equipment. HEPA and MEPA filters shall be used to meet particulate emissions requirements. If needed to meet radon emissions limits, carbon beds shall be provided. Off-gas exiting the scrubbers will pass through a heat exchanger, which will reduce the temperature of the off-gas.

2.3.2 Mechanical Process

2.3.2.1 Responsibility

Mechanical Process will interact with Process during the development of the project conceptual flowsheets and process equipment sizing. Mechanical Process will have joint responsibility with Material Handling and Process for all equipment depicted on the flowsheets.

Mechanical Process will be responsible for the specification of tanks, pumps, air compressors, heat exchangers, filters, and scrubbers, and support will be provided to Process for the indirect rotary dryer.

2.3.2.2 Codes, Standards, and Regulations

1) American Petroleum Institute (API) Standard 620-90, Eighth Edition, Design and Construction of Large, Welded, Low-Pressure Storage Tank

2) API Standard 650-93, Ninth Edition, Welded Steel Tanks for Oil Storage

3) DOE Order 6430.1A, "General Design Criteria"

4) Tubular Exchanger Manufacturers Association, Inc. (TEMA) standards

5) American Society of Mechanical Engineers (ASME) B73.1M-91, Specification for Horizontal End Suction Centrifugal Pumps for Chemical Process

6) ASME Boiler and Pressure Vessel Code Sections VIII and IX

2.3.2.3 Design Criteria

The facility shall be designed to meet the requirements of DOE Order 6430.1A. Design shall consider, and where required, use secondary containment to restrict the movement of radioactive liquid waste that has the potential for human contact or reducing groundwater quality. When necessary to prevent chemical reactions or introduction of contaminants, individual lines shall be used for each waste stream fed to collection tanks. Materials shall be selected for corrosion resistance and ease of decontamination. Provisions shall be made so that liquids can be analyzed prior to transfer.

Tank systems shall be equipped with spill prevention devices (i.e., check valves, dry disconnect couplings) and overfill controls (i.e., liquid level probes, high level alarms, and interlocks to stop flow).

Equipment

Tank design shall meet the requirements of API 620 and/or 650.

Shell and tube heat exchangers shall meet the requirements of TEMA.

Where applicable, pumps shall meet the requirements of ASME B73.1M.

Dryers, receivers, and filter housings shall meet the requirements of the ASME Boiler and Pressure Vessel Code, Section VIII. Welding associated with pressure vessels shall meet the requirements of the ASME Boiler and Pressure Vessel Code, Section IX. Note that the equipment will meet the requirements of the ASME Boiler and Pressure Vessel Code to ensure the quality of welds and fabrication. This does not imply that the equipment must be "stamped."

Process Water

Process water will be obtained from the FEMP's process water system.

Plant and Instrument Air

Plant and instrument air will be required for the off-gas treatment system, laboratory, and maintenance needs. Air compressor(s) will be installed rather than tying into existing site air system to avoid conflicts with the D&D project.

Vibration

Rotating equipment will be dynamically balanced in accordance with the manufacturer's standard practice.

Containment, Sump Requirements

Containment systems shall meet the criteria in DOE Order 6430.1A, Paragraphs 1300-7 and 1323-5.

Accessibility for In-Service Inspection

All equipment shall be provided with access, including platforms and ladders (as required), for inspection while in service.

Corrosion Allowance

Stainless steel and epoxy-coated steel tanks will not require a corrosion allowance.

2.3.3 Piping

2.3.3.1 Responsibility

Piping will be responsible for the specification of pipes, fittings, valves, pipe supports/anchors, and piping and equipment insulation.

2.3.3.2 Codes, Standards, and Regulations

1) ASME B31.3, Chemical Plant and Refinery Piping

2) ASME Boiler and Pressure Vessel Code

3) American Society for Nondestructive Testing (ASNT) SNT-TC-1A, Recommended Practice

4) American Society for Testing and Materials (ASTM) A-36, Standard Specification for Structural Steel

5) ASTM A-576, Standard Specification for Steel Bars, Carbon, Hot Wrought, Special Quality

6) ASTM B-209, Aluminum and Aluminum Alloy Sheet and Plate

7) ASTM C-533, Calcium Silicate Block and Pipe Thermal Insulation

8) ASTM C-552, Cellular Glass Thermal Insulation

9) American Welding Society (AWS) D.1.1, Structural Welding Code Steel

10) DOE Order 6430.1A, General Design Criteria

11) Manufacturers Standard Society (MSS) SP-58, Pipe Hangars and Support - Materials, Design, and Manufacture

12) MSS SP-69, Pipe Hangars and Support - Skeleton and Application

13) MSS SP-89, Pipe Hangars and Support - Fabrication and Installation Practices

2.3.3.3 Design Criteria

General Criteria

ASME B31.3 and the ASME Boiler and Pressure Vessel Code shall be the basis for the various piping systems designs.

Flexibility

The impacts of dynamic effects (wind and vibration) and weight effects (live loads, dead loads, and test loads) shall be considered in the design so that stresses created by these combined loads do not exceed the allowable stresses as prescribed by ASME B31.3 and, where applicable, the ASME Boiler and Pressure Vessel Code. Seismic and stress analysis calculations will be performed as part of the design.

Double-Walled Pipe

In accordance with DOE Order 6430.1A, Paragraph 1300-7.4, and where required, radioactive or other hazardous materials shall be carried in double-walled pipes where the primary pipe leaves a secondary confinement structure. In areas within the secondary confinement structure, the use of double-walled pipe shall be considered. Use of double-walled pipe will depend on factors such as accessibility, location, and type of waste. Leakage monitoring shall be provided to detect leakage into the space between the carrier (inner) and containment (outer) pipes.

Pressure

Design and test pressures shall comply with ASME B31.3.

Testing

Pipe and piping systems testing shall conform to the requirements set forth in ASME B31.3 and ASNT SNT-TC-1A.

Special Flow Considerations

Slurry pipe flow capacities shall maintain an adequate velocity to prevent settling of solids. Slurry pipe design shall consider internal erosion.

Heat Tracing and Insulation

Heat tracing and insulation shall be provided for all piping, fittings, valves, and equipment which are subject to freezing temperatures, to prevent heat loss and freezing, and for personnel protection.

Insulation

Insulation requirements shall be in accordance with the applicable ASTM insulation and sheeting specifications.

Pipe Supports

Pipe supports shall be spaced in accordance with ASME B31.3.

Pipe hanger material, design, manufacture, selection, application, fabrication, and installation shall be in accordance with MSS, SP-58, SP-69, and SP-89.

Auxiliary steel supports shall be in accordance with ASTM A-36 and S-576.

Welding Requirements

Welding shall be in accordance with ASME B31.3 and AWS D1.1.

116 [redacted]

Material

Corrosion, abrasion resistance, and ease of decontamination shall be considered when selecting pipe, fittings, valves, and equipment items.

Special Valves

Slurry valves shall be full port.

2.3.4 Material Handling

2.3.4.1 Responsibility

Material Handling will be responsible for the design of solids handling and waste processing equipment such as bridge cranes, excavation equipment, hoppers, apron conveyors, belt conveyors, feeders, shredder systems, product storage and blending system, and railcar handling and loadout system. Material Handling will also be responsible for the design of any specialty equipment.

2.3.4.2 Codes, Standards, and Regulations

Components of the material handling systems shall conform to requirements of the following standards, as applicable:

1) Crane Manufacturers Association of America Spec. No. 70, 1988, Electric Overhead Traveling Cranes

2) ANSI B30.16-93, Overhead Hoists (underhung)

3) ANSI B30.11-88, Monorails and Underhung Cranes

4) ANSI B56.6-87, Rough Terrain Fork Lift Trucks

5) American Gear Manufacturers Association (AGMA) 2001B-88, Fundamental Rating Factors and Calculation Methods for Involute Spur and Helical Gear Teeth

6) AGMA 6017E-86, Rating and Application of Single and Multiple Reduction Double-Enveloping-Worm and Helical-Worm Speed Reducers

7) AGMA 6021-G-89, Shaft Mounted and Screw Conveyor Drives Using Spur, Helical and Herringbone Gears

8) AGMA 6034-B-92, Practice for Enclosed Cylindrical Wormgear Speed Reducers and Gearmotors

9) Anti-Friction Bearing Manufacturers Association (AFBMA) 9-91, Load rating Standard for Ball Bearings

10) AFBMA 11-90, Load Rating Standard for Roller Bearings

11) ASME B29.1M-86, Precision Power Transmission Roller Chains, Attachments and Sprockets

12) Society of Automotive Engineers (SAE) J514-92, Hydraulic Tube Fittings, Standard

13) SAE J516-92, Hydraulic Hose Fittings, Standard

14) SAE J517-91, Hydraulic Hose, Standard

15) SAE J518-91, Hydraulic Flanged Tube, Pipe, and Hose Connections, Four-Bolt Split Flange Type, Standard

16) AWS D1.1-94, Structural Welding Code Steel

17) ASTM A36/A36M-Rev. A-93, Standard Specification for Structural Steel

18) ASTM A53 Rev. A-93, Standard Specification for Pipe, Steel, Black and Hot-Dipped, Zinc-Coated, Welded and Seamless

19) Steel Structures Painting Council SP6-91, Surface Preparation Specification No. 6, Commercial Blast Cleaning

20) ASTM 1-167 Rev. A-94, Standard Specification for Stainless and Heat Resistant Chromium-Nickel Steel Plate, Sheet, and Strip.

2.3.4.3 Design Criteria

General Criteria

Material handling systems will be designed for manual operations, to the maximum extent practicable. Equipment maintenance will be performed manually by hand-held equipment. Operators will wear

personal protective clothing as specified in the project-specific Health and Safety Plans. Remotely operated robotics equipment will not be used for operations or maintenance of equipment.

Specific Criteria

1) The on-site transportation of packaged dry pit waste shall conform to the requirements of FEMP Site Policy and Procedure PP-0314.

2) The off-site transportation of packaged dry pit waste shall conform to all applicable Federal regulations. These are discussed in the *Transportation and Disposal Plan* (FERMCO 1995b). The shipment of wastes shall also conform to applicable State and local regulations of the states through which the shipment travels.

3) All packages for transportation of radioactive waste shall conform to the standards identified in Subsection 2.1.5 of this DCD and the *Transportation and Disposal Plan* (FERMCO 1995b).

4) Design of waste processing facilities shall conform to the requirements of DOE Order 6430.1A and DOE/TIC-11603.

5) Waste being processed through the dryer will be limited to a maximum of 4 inches in any direction.

6) Apron feeders, if used for conveyance of materials, will have a maximum speed of 100 feet per minute (fpm).

7) Conventional earth-moving equipment will be used for handling wet, sticky material as well as dry material.

8) Bottom openings of all chutes and hoppers for handling of wet, sticky waste will be as large as possible to accommodate oversize debris. Chutes and hoppers will be lined with 1/2-inch-thick, ultra high molecular weight plastic and shall be designed so that two opposing sides are vertical or diverging. The number of belts, chutes, and hoppers will be kept to a minimum.

9) Provisions shall be made for periodic automatic water washdown of all equipment that processes wet, sticky material. Drip pans shall be provided underneath the equipment for water collection. Floor sumps with sump pumps shall be required for processing of washdown water.

10) Access shall be provided in all areas for removal of equipment for maintenance in case of equipment breakdown.

11) Dust collection and/or dust suppression systems shall be provided, as required, at material transfer points to keep airborne particulates to a minimum.

12) The following bulk densities and angles of repose will be used for sizing storage piles:
   (1) Waste Preparation Area (as received from the excavation):
      a) Wet waste: 85 pounds per cubic feet (pcf) at 15 degrees (angle of repose)
      b) Dry waste: 135 pcf at 33 degrees (angle of repose)
   (2) Dryer Feed Pile (after draining, blending, and shredding): 77 pcf at 30 degrees (angle of repose)
   (3) Loadout Area
      a) Waste at optimum moisture: 95 pcf at 33 degrees (angle of repose)

13) All components in a hydraulic power system shall be designed for 3,000 pounds per square inch (psi). The associated hydraulic piping and hoses must have a minimum safety factor of four. Maximum operating pressure in hydraulic systems shall be limited to 2,400 psi.

14) Material handling processes, including waste segregation, shall be designed to avoid direct human contact with the waste material.

15) Material handling processes shall be designed such that waste material that could damage or otherwise cause significant down-time to material transfer or processing equipment shall be segregated from the main waste stream as early in the process as possible.

16) Any material segregation equipment, such as a screen or grizzly shall be of a type and size that minimizes plugging and can be easily cleared if plugging does occur.

17) Because of the sticky characteristic of some of the waste material, the number of material transfer points shall be minimized to avoid excessive system down-time for cleaning or maintenance.

18) Skip hoists shall be used to transfer or load material only when use of conventional mobile earth moving equipment is not feasible or practical.

2.3.5 Civil

2.3.5.1 Responsibility

Civil design work will include all utilities (i.e., underground fire protection water, process water lines, natural gas, and routing of electric), stormwater management, floodplain and wetlands management,

excavation, and secondary containment design. Civil will be responsible for the design and specification of:

1) Site clearing and layout
2) Surveying
3) Earthwork (coordinated with Geotechnical)
4) Slope protection and erosion control (slope stability coordinated with Geotechnical)
5) Paving and surfacing
6) Underground utilities
7) Stormwater management systems
8) Geosynthetics (coordinated with Geotechnical)
9) Fences and gates
10) Landscaping and seeding
11) Floodplain and wetlands management
12) Excavation (assistance to Material Handling)
13) Rail upgrades (see the *Description of On-Site Rail Improvements* [PARSONS 1996e] for scope)

2.3.5.2 Codes, Standards, and Regulations

1) American Association of State Highway and Transportation Officials (AASHTO) GDHS-90 Policy on Geometric Design of Highways and Streets, 1990

2) DOE Order 6430.1A

3) North American Datum (NAD) of 1983

4) North American Vertical Datum of 1929

5) National Fire Protection Association (NFPA) 24, Installation of Private Fire Service Mains and their Appurtenances

6) Soil Conservation Service (SCS) TR-55 Urban Hydrology for Small Watersheds, Technical Release 55

7) TP-40, Rainfall Frequency Atlas of the United States for Durations from 30 minutes to 24 Hours and Return Periods from 1 to 100 Years, National Weather Service

8) Hamilton County Earthwork Regulations

9) ANSI B31.8, Gas Transmission and Distribution Systems

10) NFPA 54, National Fuel Gas Code

11) Ohio Department of Transportation (ODOT) Standards

12) ACI Codes

13) American Railway Engineering Association standards

14) CSX Transportation Design and Construction of Industrial Sidetracks manual

15) Rainwater and Land Development, Ohio's Standards for Stormwater Management, Land Development, and Urban Stream Protection (ODNR)

2.3.5.3 Design Criteria

Site Clearing

The remediation area will be arranged to reduce the amount of clearing required. Work will be specified to be performed in accordance with ODOT and Rainwater and Land Development standards. Fence material and topsoil will be removed and salvaged for re-use. FEMP standards for waste material will be specified for material that cannot be re-used and must be removed from the work zone. Fence removed for construction will be salvaged and re-used where possible.

Surveying

A field run topographic and location survey will be performed for the proposed treatment area, railyard storage area, and utility routes. Soil boring locations, elevation benchmarks, and construction control points will be established. All coordinates will be referenced to the NAD 83 State Planar Coordinate System. All survey work shall be to a third order accuracy standard as established by the Standards and Specifications for Geodetic Control Networks.

Topographic contours will be established at 1-foot intervals. Spot elevations will be taken at high and low points of areas, ditch inverts, culvert inverts, and tops of grates or manholes. Railyard and roadway centerlines and pavement width will be determined. All utility poles, valve boxes, fences, rail tracks, and other similar surface features will be located.

Earthwork

Earthwork for the facilities shall include all grading, excavation, compaction, trenching, and filling, and shall be specified to conform to ODOT and Rainwater and Land Development standards. Trenching and

open pit excavations shall also conform to Occupational Safety and Health Administration (OSHA) standards, 29 CFR Part 1926. Where feasible, permanent slopes shall be a minimum of 0.5 percent for impervious surfaces, 2 percent for vegetated surfaces, and no greater than 3 horizontal to 1 vertical (3H:1V). Cut and fill will be planned to achieve a reasonable balance where possible.

Pit excavation activities will minimize the creation of additional wastes and excessive earthwork. Excavated contaminated and clean soils will be segregated. Excavation sequences will ensure that workers and equipment remain off of the exposed waste and outside the line of the waste's angle of repose. Temporary slopes shall be stable and maintained and/or covered to minimize erosion. Dewatering and excavation activities will occur simultaneously.

The pit excavations will be backfilled in compacted lifts to minimize settlement. The backfill will minimize infiltration from surrounding soils and from surface waters. The surface will be graded and vegetated. Grading will be "interim," as the Soil Remediation Project will be responsible for final grading. Clayey common soil will be used, similar to the surrounding soils at the excavation. If potential for contamination exists from surrounding soils or waters, the backfill may be encapsulated to limit this spread; or, possibly, coarser, quick-draining soils could be used as backfill at interface areas. Final topography will be consistent with that identified in the final sitewide topography determination.

Slope Protection and Erosion Control

Slope protection and erosion control will include temporary measures to prevent erosion (both wind and water) and control sediment during construction. Some measures will be installed prior to any earthwork being performed. During construction, additional measures will be required, such as around new catch basins. All erosion and sediment control measures will require maintenance during construction. ODOT and Rainwater and Land Development standards for control measures will be specified.

Paving and Surfacing

All paving and surfacing methods, materials, design, and details shall conform to ODOT standards. AASHTO's *A Policy on Geometric Design of Highways and Streets* 1990 (GDHS-90) will be used as a reference in site layout. Unless conditions dictate otherwise, the minimum slope shall be 0.5 percent. AASHTO H-20 loadings shall be used.

Utilities

Civil utility design work will include all proposed underground fire protection water, process water lines, natural gas, communication, and routing of electrical power lines. A field run survey will provide the information necessary to update/correct/supplement the existing FEMP grid utility drawings.

1) Process Water (designated as TW on drawings): All water lines shall have a minimum depth of cover of 3.5 feet for frost protection or be heat traced if carried aboveground. Layout shall minimize the amount of line under pavement. Thrust blocks are required for all lines 2 inches or greater. Gate valves or post indicator valves shall be installed at line intersections and at selected points throughout the distribution system to provide control over the service area in accordance with DOE Order 6430.1A.

2) Fire Protection (designated as FQ on drawings): All water mains supplying fire protection systems, fire hydrants, etc. shall be treated as fire mains and installed in accordance with NFPA 24 and DOE Order 6430.1A. Each fire hydrant within the distribution system must be capable of delivering 1,000 gpm at a residual pressure of not less than 10 psi. Fire hydrant branches (from main to hydrant) shall be at least 6 inches in diameter and no longer than 300 feet. A gate valve shall be installed with each hydrant. Fire hydrants shall be installed at a maximum spacing of 400 feet and shall not be located more than 300 feet from the building nor closer than 50 feet from the building to be protected. A minimum of two hydrants shall protect each building.

3) Natural Gas Distribution (designated as FG on drawings): All gas pipelines, valves, regulators, relief valves, and meters shall be installed as per ANSI B31.8, Gas Transmission and Distribution Piping Systems. The requirements of NFPA 54, National Fuel Gas Code, shall be adhered to during design. The practices of Cincinnati Gas & Electric shall also be followed. The FEMP site area will be considered a Class 4 location, type D construction class.

4) Communication and Electrical Power Lines: Electrical medium-voltage power circuits will be taken from manhole 247 north to the facility on overhead lines. Underground portions of the circuits near manhole 247 and at the substation will be in concrete encased PVC conduit below grade or rigid steel conduit above grade. Telephone circuits will be routed aerially by FEMP telecommunications subcontractor. Tie-in to the FEMP fire alarm detection system will be by telephone lines. Facility evacuation system tie-in to the FEMP central system will be by radio link. Aerial lines will conform to National Electrical Safety Code for clearances and other significant features.

5) Potable water and sanitary service will not be required for the process facilities.

Storm Sewer and Stormwater Management Systems

At present, the proposed remediation facilities site area is a clean area that drains southwest to Paddys Run. The site will be immediately adjacent to the waste pits' stormwater management system. To control sediment and stormwater discharge from the area during facility construction and remedial operations, the proposed site area will be incorporated into the site stormwater management system. All stormwater from the 25-year, 24-hour storm event will be collected and retained. The proposed

stormwater management system for the plant facilities will be permitted to discharge into the Biodenitrification Surge Lagoon. A retention basin will be required to properly control discharge into the Biodenitrification Surge Lagoon and to reduce suspended solids. Stormwater will be sent to FEMP wastewater treatment system from the Biodenitrification Surge Lagoon.

The stormwater management basin's discharge will be controlled by the Biodenitrification Surge Lagoon capacity. To prevent an overcapacity at the Biodenitrification Surge Lagoon, new systems will be designed to retain the 25-year, 24-hour storm per FEMP site policy. Open channels will use the 5-year storm for evaluating velocity. The stormwater management basins will be designed to safely pass the 100-year, 24-hour storm. Storm drain systems not directly connected to the stormwater management system, with catchments less than 160 acres, may be designed by the rational method. Those storm drain systems directly connected to the stormwater management system, as well as the stormwater management system, will be designed by SCS methods (e.g., TR-55, TR-20). Design details, construction methods, and materials shall be in accordance with ODOT standards. This section will also include the design of the stormwater management control structure/system. Other disciplines may also have input, depending on the system and discharge requirements.

Landscaping and Seeding

All areas disturbed during construction and reclamation that are not being surfaced will be stabilized with grass or stone, depending on conditions. Sod or stone will be specified if water velocities in channels or other conditions warrant their use. All vegetated surfaces will be on topsoil and will have soil supplements as necessary. Seed and supplement rate and materials shall conform to ODOT and Rainwater and Land Development standards. Temporary seeding of exposed soil shall be required if the area is not expected to be worked for 30 days, per ODOT and Rainwater and Land Development standards.

Floodplain and Wetlands Management

The work proposed is not in the 100-year floodplain (PARSONS 1993a). Some utility line routes may run through FEMP designated wetlands. All necessary approvals will be obtained for this work.

Excavation

It is assumed that the waste to be excavated can be sufficiently dewatered (i.e., by drainage) to permit handling by conventional earth-moving equipment. The waste material will be dewatered to a moisture content less than the waste's liquid limit as determined by Plasticity Index testing. The pit waste's natural angle of repose will be determined as part of the geotechnical investigations for the project. Excavation sequences will ensure that the tracks of the excavation equipment remain off of the exposed waste and outside the line of the waste's repose angle. Safety of equipment operators will need special consideration and first priority during design and waste excavation.

Siting

As required by the ARARs in Appendix A, impacts on wetlands and floodplains shall be minimized. Table A-1 of Appendix A discusses these requirements.

2.3.6 Structural

2.3.6.1 Responsibility

Structural will have the responsibility of designing the structures for OU1 remediation facilities.

2.3.6.2 Codes, Standards, and Regulations

Codes, standards, and Orders applicable to the structural design follow:

1) Uniform Building Code (UBC) 1994

2) Ohio Basic Building Code (OBBC) 1995

3) Metal Building Manufacturers Association (MBMA) - Recommended Design Practice Manual

4) ASTM standards as referenced in Subsection 2.3.6.3

5) DOE Order 6430.1A, "General Design Criteria"

6) DOE-STD-1020-94, "Natural Phenomena Hazards, Design and Evaluation Guidelines for DOE Facilities"

7) University of California Research Laboratory (UCRL) 53582, "Natural Phenomena Hazards Modeling Project; Seismic Hazard Models for DOE Sites"

8) American Society of Civil Engineers (ASCE), 7-93, "Minimum Design Loads for Buildings and Other Structures"

9) ACI 318, "Building Code Requirements for Reinforced Concrete"

10) American Institute of Steel Construction (AISC) Manual, 9th edition

11) DOE Order 5480.28, "Natural Phenomena Hazards Mitigation"

12) DOE-STD-1021, "Natural Phenomena Hazards Performance Categorization Criteria for Structures, Systems, and Components"

2.3.6.3 Design Criteria

The design and evaluation of SSCs for NPHs due to wind, earthquake, and flood shall be in accordance with DOE Order 6430.1A and DOE-STD-1020 (formerly UCRL 15910).

The SSCs for the OU1 remediation system include engineered buildings, pre-engineered buildings, miscellaneous structural steel supports, and concrete foundations.

Dead Loads

Dead loads shall include all loads that remain permanently in place, including weights of all permanent materials, equipment, self-weights, and provisions for future loads, if required.

The unit weights of materials and assemblies for buildings and other structures may be based on sources of data from manufacturer's drawings and catalogs, Table C1 of ASCE 7-93 and Table 2-9 of this DCD.

Dead loads shall also include weights of all permanent service equipment, including piping, air conditioning equipment, electrical equipment, and fixed furnishings.

Dead loads for partition walls shall be per Section 0111-2.2.4 of DOE Order 6430.1A.

Table 2-9 - Minimum Design Dead Loads

Structure	Load
Pipe racks	Actual load but not less than 35 psf at each level
Electrical raceways	Actual load but not less than 15 psf at each level
Materials and equipment	Actual load

Live Loads

Live loads shall include all loads resulting from occupancy and use of the structures. Live loads may act in any direction. Impact loads, moving loads, and operating loads shall be considered as part of live loads.

Live loads for buildings and other structures shall be as shown in Table 2-10, but not less than the minimum uniform or concentrated loads stipulated in ASCE 7-93.

Roof live loads shall include snow loads, snow drifts, or rain loads as applicable per ASCE 7-93.

Table 2-10 - Minimum Design Live Loads

Structure	Load
Building Floors	125 psf, or equipment load or storage weight if greater
Walkways (other than exitways)	60 psf
Stairs and exitways	100 psf
Equipment platforms	100 psf
Trench covers	16,000 lb wheel load
All other areas	100 psf
Roofs	20 psf where tributary area is less than 200 sf and roof pitch is less than 4:12
Impact loads	In accordance with ASCE 7-93, Subsection 4.7

Wind Loads

Wind load design criteria presented in this section shall be based on the requirements of DOE Order 6430.1A, DOE-STD-1020, ASCE 7-93, and the OBBC. Exposure "C" shall be used for all wind load calculations, per Section 0111-2.4.2 of DOE Order 6430.1A.

The effective velocity pressure q_z at any height Z above the ground shall be calculated using the following equation:

$$q_z = 0.00256\ K_z(IV)^2 \text{ (Section 6.5.1 of ASCE 7-93)}$$

where:

I = Importance Factor = 1.07 (Table 3-1 of DOE-STD-1020)
K_z = Velocity pressure coefficient at height Z (Table 6 of ASCE 7-93)
V = Basic wind speed = 80 mph (Section 1611-3 of OBBC)

Design wind loads shall be based on factors and coefficients stipulated in ASCE 7-93, Table 4.

128 [redacted]

Tornado Loads

Tornado loadings, tornado missiles, and Atmospheric Pressure Change loads are not applicable for PC-2 facilities per DOE-STD-1020. Tornado loadings, therefore, are not considered.

Seismic Design and Evaluation

The seismic criteria for the design and evaluation of SSCs shall be based on procedures detailed in Section 2.3.1 of DOE-STD-1020, PC-2, and UBC Section 1628.

The earthquake response shall be evaluated in accordance with procedures given in UBC Section 1627.8, using the static force method.

The design base shear using the static force procedure shall be calculated using the following formula:

$$V = \frac{ZIC}{R_w} W$$

where

Z = A seismic zone factor equivalent to peak ground acceleration = 0.13 (based on site-specific seismic hazard curve for the FEMP from UCRL 53582)

I = Importance Factor = 1.25

C = Spectral Amplification Factor = 2.75 (Based on site-specific response spectra for the FEMP from UCRL 53582)

R_w = Reduction factor from UBC Table 16-N or Table 16-P, as applicable

W = Total dead load and applicable portions of their loads as listed in UBC Section 1628.1

The capacities will be evaluated using the strength design or allowable stress design method. The story drift limitations shall be per UBC Section 1628.8.

The SSCs shall meet the UBC Seismic Zone No. 2 detailing provisions in accordance with UBC Section 1631.

Nonbuilding structures shall meet the requirements of UBC Section 1632.

Lateral force on elements of structures and nonstructural components supported by structures shall be in accordance with UBC Section 1630.

Quality assurance and peer review for earthquake evaluation shall be in accordance with Appendix C.8 of DOE-STD-1020 for PC-2.

Other Loads

1) Other loads: Load criteria not specified above shall conform to DOE Order 6430.1A, paragraph 0111-2.8, "Other Loads for Buildings and Other Structures."

2) Cyclic/Dynamic Loads: Consideration will be given to dynamic loading of any vibrating equipment (i.e., pumps, compressors, and shredder).

Other Structural Material/Design Requirements

Design requirements for structural materials and design are as follows:

1) Concrete: Concrete material, design, and construction for buildings and other structures shall be per ACI 318-89. Minimum concrete strength at 28 days shall be 3,000 psi. Concrete exposed to weather shall be a minimum of 4,000 psi.

2) Reinforcement: Deformed billet steel shall conform to ASTM A615, Grade 60.

3) Grout: High strength, nonshrink grout shall be 1 inch minimum thickness under equipment, columns, and pipe support base plates unless otherwise recommended by equipment supplier.

4) Structural Steel: Design, details, fabrication, and erection of structural steel shall conform to the UBC and the AISC Manual, Ninth Edition. The material for structural steel shapes and plates shall conform to ASTM A36. All structural steel and connections, including ladders, handrailing, and grating, shall be painted or galvanized. Connection bolts shall be high-strength ASTM A325 with hardened washer and nut.

5) Field connections: Connections may be bolted or welded connections per AISC.

6) Operating and Maintenance Platforms: These shall be a minimum of 3 feet, 0 inches wide, with walkways 2 feet, 6 inches minimum width.

7) Minimum Headroom Clearance: Clearance shall be 7 feet, 6 inches above nosing line of stairs, and shall conform to OSHA requirements.

8) Masonry: Materials, design, and construction of masonry structures shall be per UBC 94, assuming special inspection. Hollow, non-load-bearing block shall be per ASTM C129. Hollow,

load-bearing block shall be per ASTM C90. Mortar shall be per ASTM C35 or C56, Type M or N.

9) Open Pipe Trenches: Locate tops of walls at the same elevations as surrounding grades/slabs. Slope trench floors at least 1 percent to drains. Cover with grating weighing not over 150 pounds per piece. Size to allow easy access to in-trench pipe and fittings. Allow 3-inch minimum between flanges or pipe, and walls and floor. Provide anchorage and supports for pipe. Supply reinforced concrete or ductile iron covers if heavy trucks will pass over the trenches.

10) Concrete Slabs-on-Grade: Show control joints except where floor covering occurs, preferably in line with faces of foundation pedestals, pilasters, etc., but not more than 20 feet apart. Pour strips to be a maximum of 20 feet wide.

11) Foundations: Per DOE Order 6430.1A, Section 0111-3.4, the provisions of UBC Chapter 18 shall be the minimum requirements for foundation design. Use spread, mat-type, or continuous strip footings placed in the upper natural soils, or properly compacted fill, for an assumed allowable bearing pressure of 2,000 psf at a depth of 3 feet below the adjacent final grade. Allowable soil bearing pressures and any other special foundation requirements will be verified by the site-specific soil report. Allowable stresses may be increased by a value of 1/3 when wind or earthquake forces are included. The minimum embedment depth of foundations in soil shall be 3 feet, 0 inches to prevent problems with frost penetration. Comply with specific requirements based on the site-specific soil report (to be prepared later).

12) Pre-engineered Buildings: Pre-engineered buildings shall comply with MBMA Metal Building Systems Manual and Section 0111 of DOE Order 6430.1A, Structural Design Requirements. Certified shop drawings and calculations will be submitted in accordance with applicable specifications and worked in conjunction with Architectural.

13) Doorways, roadways, and other means of vehicle ingress or egress shall have adequate clearance for vehicle traffic.

Factor of Safety Against Overturning

Per UBC Section 1619.1, the base overturning moment for the entire structure, or for any of its individual primary lateral-resisting elements, shall not exceed 2/3 of the dead-load-resisting moment. For an entire structure with a height-to-width ratio of 0.5 or less in the wind direction and a maximum height of 60 feet, the combination of the effects of uplift and overturning will be reduced by 1/3 (i.e., factor of safety equal to 1.0). The weight of earth superimposed over footings will be used to calculate the dead-load-resisting moment.

Per Section 1611-1-3 of the OBBC, the overturning moment due to wind load shall not exceed 2/3 of the dead load stabilizing moment unless the building or structure is anchored to resist the excess moment (i.e., factor of safety equal to 1.5).

Loading Combinations

Combinations of loads, allowable stresses, and strength requirements for buildings and other structures shall be in accordance with UBC 94, Chapter 16, Section 1603.6.

2.3.7 Architectural

2.3.7.1 Responsibility

Architectural will be responsible for the design and specifications of:

1) Pre-engineered buildings
2) Metal siding for steel buildings
3) Material finishes
4) Insulation
5) Paintings and coatings

2.3.7.2 Codes, Standards, and Regulations

1) DOE Order 6430.1A, "General Design Criteria"
2) OBBC 1995
3) UBC 1994
4) NFPA 101, Life Safety Code
5) NFPA 13, Standard for Installation of Sprinkler Systems
6) MBMA - Recommended Design Practice Manual
7) ASTM as referenced in Subsection 2.3.7.3
8) 40 CFR 101-19.6, " Uniform Federal Accessibility Standards"
9) ANSI, as referenced in Subsection 2.3.7.3
10) Performance Criteria for Roofing Membranes Using Polymer Modified Bituminous Products
11) Recommended Work Procedures for Resilient Floor Covering
12) Architectural Painting and Wall Covering Manual

In case of conflict between the codes and standards, the most stringent will be adhered to.

132

2.3.7.3 Design Criteria

General Criteria

The dryer discharge and entry enclosures will be shed type buildings designed by PARSONS ERA Project.

Buildings will be categorized as Factory Occupancy, Moderate Hazard (F-1), and classified as Type 2B construction (not to be confused with DOE Order 6430.1A classifications), with an approved fire suppression system throughout in accordance with the requirements of UBC, OBBC, and NFPA 13.

Exits

A minimum of two exits are required on all buildings except the dryer discharge and entry enclosures, leading to the exterior of the buildings. The maximum allowable length of exit access travel for this occupancy with fire suppression system is 75 feet according to NFPA 101 Section 5-11.1.

Ceiling and floor finishes at exit access shall be Class B (minimum) per NFPA 101.

Doors

All exterior personnel doors, interior doors, and special doors shall be hollow metal fabricated conforming to ASTM A366. All exterior doors shall be insulated. Hollow metal door frames shall conform to ASTM A366.

Finish hardware for doors shall include butts, locks, kickplates, closures, doorstops, thresholds, and silencers, and shall follow the requirements of the ANSI A156 Series.

Overhead coiling doors shall be fabricated to resist a wind load of 25 psf. Door tracks shall be of a gage and size to meet door size and wind loading. Doors shall be chain hoist operated with electric motors (code reference - ANSI A216.1).

Materials and Surface Treatment

The interior walls will be either concrete, concrete block, or gypsum drywall.

Sheet metal roofing shall comply to UBC for roof covering.

Exterior insulation and finish systems shall comply with UBC Standard No. 17-6.

Resilient flooring installation shall comply with Resilient Floor Covering Institute's Recommended Work Procedures for Resilient Floor Covering.

Concrete floors are to be sealed according to Portland Cement Association's Painting Concrete. Coatings will be lead free and have no chromates.

Painting of all surfaces will be in accordance with the recommendations of a single-source manufacturer of the painting system selected. Painting shall comply with the Architectural Painting and Wall Covering Manual.

2.3.8 Mechanical Utilities

2.3.8.1 Responsibility

Mechanical Utilities will be responsible for HVAC, air cleaning, off-gas handling, fire protection, and plumbing for the facility in support of the remediation system design for OU1.

Enclosed Buildings

HVAC will be provided for all enclosed buildings to prevent the spread of contamination, create suitable environments for workers, and provide uninterrupted equipment operation. Building exhaust fans will exhaust all ventilated air from buildings through prefilters, HEPA filters, and a stack. Airflow shall be controlled and directed from less contaminated areas to more contaminated areas. Air handling units or louvers/backdraft dampers will supply makeup air. Air handling units will be furnished with cooling and heating coils.

For cooling, the following alternatives will be considered: direct expansion type coils with air-cooled condensing units, chilled water coils with chilled water from a chiller, or an air-cooled chiller. These will provide cooling capacity for the process, as well.

For heating, the following alternatives will be considered: space unit heaters, or installation of a heat exchanger in the dryer exhaust air stream (to utilize the heat from the dryer to provide hot water or steam to heating coils in air handling units).

The vendor-supplied support trailers will also have vendor-supplied HVAC systems.

2.3.8.2 Codes, Standards, and Regulations

1) American Air Balance Council National Standards for Total System Balance

134

2) American Conference of Government Industrial Hygienists (ACGIH) Industrial Ventilation

3) Air Movement and Controllers Association, Inc. 210, Laboratory Method of Testing Fans for Rating

4) ANSI Z358.1, Emergency Eyewash and Shower Equipment

5) American Refrigeration Institute (ARI) 360, Commercial and Industrial Unitary Air Conditioning Equipment

6) ARI 430, Central Station Air Handling Units

7) ARI 460, Remote Mechanical Draft Air-Cooled Refrigerant Condensers

8) ARI 520, Positive Displacement Refrigerant Compressors, Compressor Units, and Condensing Units

9) American Society of Heating, Refrigeration, and Air Conditioning Engineers (ASHRAE) - Handbooks
   (1) ASHRAE 15, Safety Code for Mechanical Refrigeration
   (2) ASHRAE 20, Methods of Testing for Rating Remote Mechanical Draft Air-Cooled Refrigerant Condensers
   (3) ASHRAE 55, Thermal Environmental Conditions for Human Occupancy
   (4) ASHRAE 62, Ventilation for Acceptable Indoor Air Quality
   (5) ASHRAE 90.1-1989, Energy Efficient Design of New Buildings Except Low-Risk Residential Buildings

10) OBBC (mechanical)

11) 29 CFR 1910, Occupational Safety and Health Standards

12) DOE Order 6430.1A, General Design Criteria

13) DOE/TIC 11603-Rev I, Standards and Criteria Guide Non-Reactor Nuclear Facilities

14) Energy Research and Development Administration (ERDA) 76-21, Nuclear Air Cleaning Handbook

15) Sheet Metal and Air Conditioning Contractors' National Association 75, Accepted Industrial Practice for Industrial Ducts

16) Underwriters Laboratories, Inc. (UL) 207, US Standard for Safety Refrigerant-Containing Components and Accessories, 1993

17) UL 900, UL Standard for Safety Air Filter Units

18) DOE Order 5480.7A, Fire Protection

19) NFPA
   (1) NFPA 10, Portable Fire Extinguishers
   (2) NFPA 11, Low Expansion Foam
   (3) NFPA 11A, Medium- and High-Expansion Foam Systems, 1994
   (4) NFPA 12, Carbon Dioxide Extinguishing Systems, 1993
   (5) NFPA 13, Installation of Sprinkler Systems
   (6) NFPA 14, Installation of Standpipe and Hose Systems
   (7) NFPA 15, Water Spray Fixed Systems for Fire Protection, 1990
   (8) NFPA 16, Installation of Deluge Foam-Water Sprinkler and Foam-Water Spray Systems, 1991
   (9) NFPA 16A, Installation of Closed-Head Foam-Water Sprinkler Systems, 1994
   (10) NFPA 24, Installation of Private Fire Service Mains and Their Appurtenances, 1992
   (11) NFPA 72, National Fire Alarm Code, 1993
   (12) NFPA 90A, Installation of Air Conditioning and Ventilating Systems, 1993
   (13) NFPA 90B, Installation of Warm Air Hearing and Air Conditioning System, 1993
   (14) NFPA 91, Installation of Exhaust Systems for Air Conveying of Materials

2.3.8.3 Design Criteria

Heating, Ventilation, and Air Conditioning

The design of the HVAC systems shall conform to DOE Order 6430.1A (Section 1550); ASHRAE handbooks, ASHRAE Standards 55 and 62; NFPA 90A, 90B, and 91; ACGIH, Industrial Ventilation Manual; and the OBBC.

Outside design temperature shall be 92° F dry bulb/73° F wet bulb for summer and 1 degree F for winter.

Ventilation exhaust systems design requirements shall be in accordance with DOE Order 6430.1A, Section 1550-1.5. Ventilation air shall be provided to achieve OSHA air quality limits, all the Permissible Exposure Limits established by 29 CFR 1910, and ACGIH Threshold Limit Values or better.

Ventilation exhaust systems shall provide a minimum of six air changes per hour for the process building.

136

All exhaust air will pass through prefilters, HEPA filters, and an exhaust stack before being discharged to the atmosphere in compliance with DOE Order 6430.1A and ERDA 76-21. The exhaust stack shall be at least 12 feet higher than the nearest building within 500 feet (ERDA 76-21, pg. 130).

All enclosed buildings and enclosed conveyors shall be maintained under a negative pressure of 0.1 inches water gage to ensure that there will be no exfiltration of airborne contaminants to the environment.

The ventilation system shall provide airflow from areas of low contamination to areas of higher contamination to prevent cross-contamination. The ventilation system shall permit the filters to be changed easily, with a minimum potential for the release of radioactive materials, and shall minimize worker exposure.

All exhaust duct work shall be designed to maintain a minimum transport velocity of 2500 fpm.

Duct work that will come into contact with radioactive airborne particles shall be constructed of stainless steel. Process off-gas duct work shall be stainless steel if deemed necessary as a result of the off-gas composition analysis. All other duct work will be made from galvanized steel.

Where mechanical ventilation cannot maintain the room temperature within the National Electrical Manufacturers Association (NEMA) equipment rating, mechanical cooling systems shall be provided in compliance with DOE Order 6430.1A, Section 1550, paragraph 1.5.7.

Air conditioning will be provided for the control room.

Air handling and air conditioning equipment will be sized and selected in accordance with ASHRAE handbooks and shall comply with ARI 430 and ARI 360 in compliance with DOE Order 6430.1A, Section 1550, paragraph 2.1.

Air-cooled condensers, chillers, and condensing units shall meet the standards, rating, and testing requirements of ARI 460, ARI 520, and ASHRAE Standard 20, and shall be in compliance with DOE Order 6430.1A, Section 1550, paragraph 2.1.3.

Energy Conservation

An Energy Conservation Report is required for the system per DOE Order 6430 1.A, Section 0110, paragraph 12.8. A waiver of this requirement has been applied for since it is not appropriate nor necessary for the OU1 remediation facilities.

Plumbing Systems

For emergency eyewash showers or other potable water requirements, self-contained equipment may be used.

Process-related wastewater drains and water from equipment drains will be collected in a wastewater drainage system.

Fire Protection

Where required, fire protection will consist of an automatic sprinkler system designed in accordance with DOE Order 6430.1A, Section 1530, and NFPA 13.

Fire extinguishers shall be provided for all mobile equipment and throughout the facility in accordance with NFPA 10.

Fire protection systems shall have audible and visual alarms installed in accordance with NFPA 72 and shall be monitored in the site communications center.

Fire protection systems shall be designed to provide protection from fires started from pyrophoric materials.

All fire detection and alarms devised shall have UL-listed components or be Factory Mutual-approved.

Fire water mains, including valves, hydrants, and fittings, shall be installed, flushed, disinfected, and tested in accordance with NFPA 24 and DOE Order 6430.1A.

A standby source of electrical power shall be provided to operate the fire protection system.

The design and installation of the systems will be the responsibility of a qualified fire protection contractor regularly engaged in the installation of fire protection systems. The contractor will obtain the approval or acceptance of all governing authorities, including the insurance underwriter (if any).

A general fire hazard analysis will be made for each building by a cognizant DOE fire protection authority. The analysis shall be made using parameters established in DOE Order 5480.7A. The analysis will be documented in report form and kept with project files.

FERMCO and PARSONS ERA Project Fire Protection Engineers are preparing an equivalency request for local DOE Fire Protection concurrence/approval. If this request is approved, the following design criteria will apply to the design of the fire protection systems for the remediation system:

138

1) Dry chemical fire extinguishers will be located in the immediate vicinity of the debris and process shredders. Fire suppression systems that are built into the shredders by the shredder manufacturers are not necessary.

2) Dry-pipe sprinkler systems will be installed over the metal detection/segregation system, over the indirect dryer, and at the dryer end enclosures.

3) A wet-pipe sprinkler system will be installed in the mechanical/electrical control building.

4) No sprinklers will be required for the loadout building.

5) The fire loop surrounding the process facility shall be eliminated except for a short run(s) for the above sprinklered areas and hydrant(s) along the run(s).

2.3.9 Electrical

2.3.9.1 Responsibility

Electrical will be responsible for the electrical power distribution system, electrical power backup supply, grounding systems, lighting, and fire alarm, evacuation, and communication systems.

2.3.9.2 Codes, Standards, and Regulations

The National Electrical Code, NFPA 70-96, the UL Electrical Construction Materials Directory 94, and Division 16 and of DOE Order 6430.1A shall be applicable to all electrical discipline work. The following codes and standards will govern design and installation of the systems for which Electrical will be responsible:

Electrical Power Distribution System

1) American National Standards Institute (ANSI):
   (1) ANSI C37.20.3-87, Rev. 1992, Metal-Enclosed Interrupter Switchgear
   (2) ANSI C37.121-89, Rev. 1995, Switchgear - Unit Substations
   (3) ANSI C57.12.28-88, Correction 1988, Switchgear and Transformers - Pad-Mounted Equipment - Enclosure Integrity
   (4) ANSI C57.12.55-87, Transformers - Dry-Type Transformers Used in Unit Installations, Including Unit Substations - Conformance Standard
   (5) ANSI C2-93, National Electrical Safety Code
   (6) ANSI C80.1-90, Rigid Steel Conduit - Zinc-Coated

2) Institute of Electrical and Electronics Engineers (IEEE):

(1) IEEE C12.1-88, Code for Electricity Metering

(2) IEEE C57.12.01-89, Standard General Requirements for Dry-Type Distribution and Power Transformers Including Those with Solid Cast and/or Resin-Encapsulated Windings

(3) IEEE C57.12.91-79, Standard Test Code for Dry-Type Distribution and Power Transformers

(4) IEEE C57.13-93, Standard Requirements for Instrument Transformers

(5) IEEE C57.94-82, Rev. 1987, Recommended Practice for Installation, Application, Operation, and Maintenance of Dry-Type General Purpose Distribution and Power Transformers

(6) IEEE C62.1-89, Standard for Gapped Silicon-Carbide Surge Arresters for AC Power Circuits.

(7) IEEE 48-90, Standard Test Procedures and Requirements for High-Voltage AC Cable Terminations

(8) NEMA ICS 1-88, Rev. 2-90, General Standards for Industrial Control and Systems

(9) NEMA ICS 2-88, Industrial Control Devices, Controllers, and Assemblies

(10) NEMA ICS 2.3-83, Instructions for the Handling, Installation, Operation, and Maintenance of Motor Control Centers (MCCs)

3) National Electrical Manufacturers Association (NEMA):

(1) NEMA AB 1-93, Molded Case Circuit Breakers and Molded Case Switches

(2) NEMA TC 3-90, Polyvinyl Chloride (PVC) Fittings for Use with Rigid PVC Conduit and Tubing

(3) NEMA TC 6-90, PVC and ABS Plastic Utilities Duct for Underground Installation

(4) NEMA WC 8-88, Ethylene-Propylene-Rubber- Insulated Wire and Cable for the Transmission and Distribution of Electrical Energy

(5) NEMA ST 20-92, Dry Type Transformers for General Applications

(6) NEMA PB 1-90, Panelboards

(7) NEMA PB 2-89, Deadfront Distribution Switchboards

(8) NEMA PB 1.1-91, General Instructions for Proper Installation, Operation, and Maintenance of Panelboards Rated 600 Volts or Less

(9) NEMA 250-91, Enclosures for Electrical Equipment (1000 Volts Maximum)

4) National Electrical Testing Association (NETA):

(1) NETA ATS-95, Acceptance Testing Specification for Electrical Power Distribution Equipment

5) National Fire Protection Association (NFPA):

(1) NFPA 70-96, National Electrical Code

Electrical Backup Power Supply

1) NEMA:
   (1) NEMA ICS 2-93, Industrial Control and System Controllers, Contactors, and Overload Relays Rated Not More Than 2000 Volts AC or 750 Volts DC
   (2) NEMA ICS 6-93, Industrial Controls and Systems Enclosures
   (3) NEMA MG 1-93, Motors and Generators

Grounding Systems

1) UL:
   (1) UL 467-93, UL Standard for Safety Grounding and Bonding Equipment

Lighting

1) NFPA:
   (1) NFPA 101-94, Code for Safety to Life from Fire in Buildings and Structures

2) NEMA:
   (1) NEMA WD 6-88, Wiring Devices - Dimensional Requirements

3) ANSI:
   (1) ANSI C82.1-85, Ballasts for Fluorescent Lamps - Specifications
   (2) ANSI C82.4-85, Ballasts for High Intensity Discharge and Low Pressure Sodium Lamps (Multiple Supply Types)

4) Illuminating Engineers Society (IES):
   (1) IES Handbook

Fire Alarm, Evacuation, and Communication Systems

1) NFPA:
   (1) NFPA 72-93, Installation, Maintenance, and Use of Protective Signaling Systems
   (2) NFPA 101-94, Code for Safety to Life from Fire in Buildings and Structures

2.3.9.3 Design Criteria

There are no specific project-related electrical design criteria. The systems under Electrical's responsibility will be designed consistent with normal requirements for these systems in any similar

industrial setting (i.e., wet, outside), with the normal FEMP requirements and coordination taken into consideration.

The facility power distribution system will include taps of the FEMP 13.2 kV distribution feeders F1B and F4B at electrical manhole EMH 247, a 13.2 kV to 480 V, 1500/2000 kVA unit substation to serve the process shredder, a 13.2 kV to 480 V, 2000/2667 kVA unit substation to serve the remainder of the facility, and 480 V MCCs and panelboards as required to serve electrical loads such as pumps, fans, HVAC equipment, and building lighting. It is anticipated that the unit substation shall be dry type, cast coil, and that MCCs and distribution panelboards shall be rated 600 amps, 480 V, 3 phase.

A dual incoming 13.2 kV line will provide an alternate feeder in the event that the primary normal feeder loses power. In addition, if power is lost within the facility, a standby diesel generator will allow an orderly shutdown of process equipment and will maintain ventilation and fire protection systems. An uninterruptible power supply will provide for continuous power to the Data Acquisition and Control System during a power loss or system failure. These backup systems are for process-related concerns. No safety-class services requiring emergency generator backup are anticipated.

A grounding grid system will be installed within and around the facility, around substations, and for fences.

High-efficiency, high-intensity discharge lighting will be installed in the process and outdoor areas of the facility. This will include the railcar storage area. High-efficiency, fluorescent fixtures will be installed in offices, electrical rooms, and control rooms. Battery-backed fluorescent and high-intensity discharge quartz fixtures will be provided for emergency lighting.

Fire alarm and evacuation systems will be extended to the new facility from the central command center via existing facilities as directed by FEMP fire protection. The fire alarm system will consist of manual pull stations, other detection devices as required, tamper and flow switches, and audio and visual alarms connecting to a central fire alarm panel located within the new facility. The evacuation system will consist of speakers located throughout the new facility. No special security systems are required. The telephone company will provide detailed design of the communication/telephone system.

2.3.10 Instrumentation

2.3.10.1 Responsibility

Instrumentation will be responsible for the distributed control system and instrument equipment.

2.3.10.2 Codes, Standards, and Regulations

International Society for Measurements and Control

2.3.10.3 Design Criteria

There are no specific project-related instrumentation design criteria. The systems under Instrumentation's responsibility will be designed consistent with normal requirements for these systems in any similar industrial setting, with the normal FEMP requirements and coordination taken into consideration. Instrumentation for specific purchased equipment, which is provided by the major equipment vendors, will be to manufacturer's standard. This information will be required with the vendor bid packages for technical evaluation.

A dedicated distributed control system will be specified for interfacing with the package systems (shredder, conveyor, and rotary dryer), waste preparation, waste dewatering, waste blending, and off-gas treatment. Vendor data information provided from package system suppliers will be required for incorporation into the control system's design. The distributed control system, as a minimum, will include operator interface terminals, hardware, software, and input/output modules.

Instrument data sheets for package systems will be provided with the corresponding performance specification. Instruments will connect to a central control panel for each package system. The control panel will be provided with instrument and control inputs and outputs via vendor-supplied terminals, designated for use by "others." This will allow for quick installation to the distributed control system without disabling or revising package equipment vendor provided instruments and controls.

Requirements for all other nonpackage instruments (flow, level, pressure, etc.) will be determined during detailed design and provided under separate procurement packages.

SECTION 3

REFERENCES

(ALTER 1994) Accelerated Life Testing and Environmental Research Facility (ALTER), July 1994. *CRU1 Cooperative Remedy Screening Program, Final Report.* Cincinnati: University of Cincinnati, College of Engineering.

(ALTER 1995a) --------- September 1995. *Interim Report, CRU-1-Dewatering, Excavation, Evaluation Program: Waste Pits 1, 2, and 3.* Cincinnati: University of Cincinnati, College of Engineering.

(ALTER 1995b) --------- September 1995. *Interim Report, CRU-1-Dewatering, Excavation, Evaluation Program: Waste Pits 5 and 6.* Cincinnati: University of Cincinnati, College of Engineering.

(Becker 1995) Becker, J., June 15, 1995. Lotus printout titled "Average Operating Conditions for Waste Pit Remediation."

(DOE 1994a) United States Department of Energy, August 1994. *Operable Unit 1 Dewatering Excavation Evaluation Program (DEEP) Treatability Study Work Plan,* Final. Fernald: DOE Fernald Field Office.

(DOE 1994b) ---------, August 1994. *Remedial Investigation Report for Operable Unit 1,* Final. Fernald: DOE Fernald Field Office.

(DOE 1994c) ---------, October 1994. *Feasibility Study Report for Operable Unit 1,* Final. Fernald: DOE Fernald Field Office. DOE\EA-0938.

(DOE 1995a) ---------, January 1995. *Final Record of Decision for Remedial Actions at Operable Unit 1.* Fernald: DOE Fernald Field Office.

(DOE 1995b) ---------, July 1995. *Final Remedial Design Work Plan for Remedial Actions at Operable Unit 1.* Fernald: DOE Fernald Field Office.

(FERMCO 1995a) FERMCO, August 1995. *Management Plan: FERMCO Policies and Requirements Manual,* Rev. 8. Fernald: FERMCO. RM-0016.

(FERMCO 1995b) ----------, March 1996. *Transportation and Disposal Plan*, Revision F. Fernald: FERMCO.

(Jenike & Johanson, Inc. 1994) Jenike and Johanson, Inc., 1994. *Flow Properties Test Report*. Westford, MA: Jenike and Johanson, Inc.

(PARSONS 1992) PARSONS ERA Project, January 1992. *Waste Pits 3 and 5 and Clearwell Dikes Stability Analysis Report*, Rev. 0. Fairfield, Ohio: PARSONS.

(PARSONS 1993) ----------, September 1993. *100- and 500- Year Flood Plain Determination Sitewide*. Fairfield, Ohio: PARSONS.

(PARSONS 1994) ----------, 1994. Shredding Engineering Tests Report. Fairfield, Ohio: PARSONS.

(PARSONS 1995a) ----------, November 1995. *Letter Report: Selection of an Indirect Rotary Dryer*, Revision B. Fairfield, Ohio: PARSONS

(PARSONS 1995b) ----------, May 1995. *Project Order Plan for Project Order 145 Remediation System Design*, Revision 1. Fairfield, Ohio: PARSONS.

(PARSONS 1995c) ----------, September 1995. *Dryer Off-Gas Compositions, Operable Unit 1 Remediation System*, Revision A. Fairfield, Ohio: PARSONS.

(PARSONS 1996a) ----------, March 1996. *Technical Summary of DEEP Test Data*, Revision 0. Cincinnati, Ohio: PARSONS.

(PARSONS 1996b) ----------, March 1996. *Process Description for the Remediation System Design*, Revision F. Cincinnati, Ohio: PARSONS.

(PARSONS 1996c) ----------, March 1996. *Estimate of Utility Requirements for Proposed Remedial Facilities for OU1 Remediation*, Revision F. Cincinnati, Ohio: PARSONS.

(PARSONS 1996d) ----------, March 1996. *Waste Excavation Plan for the Operable Unit 1 Remediation System Design*. Revision F. Cincinnati, Ohio: PARSONS.

(PARSONS 1996e) ----------, March 1996. *Description of On-Site Rail Improvements*. Revision C. Cincinnati, Ohio: PARSONS.

145

(Weston 1988) Roy F. Weston, Inc., March 1988. *Characterization Investigation Study Geotechnical Evaluation of Waste Pit Material Properties and Boring Logs*. Cincinnati.

ARARs and TBC Requirements

APPENDIX A

ARARS AND TBC REQUIREMENTS TABLES

TABLE A-1
LOCATION-SPECIFIC ARARS
(APPLICABLE REQUIREMENTS; RELEVANT AND APPROPRIATE REQUIREMENTS)

Category	Applicable Requirements	Compliance Strategy	Addressed In
Wildlife Protection	16 USC 1531 et. seq., and 50 CFR 17.21, 17.31, 17.61, 17.71, 17.94, 50 CFR 402, and Endangered Species Act All federal agencies must insure that any action authorized, funded or carried out by them is not likely to jeopardize the continued existence of any listed species or result in the destruction or adverse modification of the constituent elements essential to the conservation of a listed species within a defined critical habitat. Additional requirements apply if it is determined that a proposed activity could adversely affect these species or their habitat.	In 1994, updated surveys at the FEMP determined the presence of summer habitat for the federally-listed endangered Indiana bat along Paddys Run including areas adjacent to OU1. This area is not critical habitat. Consultation with U.S. Fish and Wildlife Service will determine restorative measures that may need to be taken during and after remedial actions. If any endangered or threatened species are encountered, the additional requirements of the referenced regulation would be applicable. Efforts will be made during remediation to preserve riparian vegetation, habitat for the Indiana bat, to the maximum practicable extent. Mitigatory requirements will be determined on a site-wide basis and presented as an outcome of the OU5 design process, for appropriate implementation.	DCD Section 2.3.5.3
Wildlife Protection	ORC 1531.25, 1518.02, and 1501: 18-1, Ohio Endangered Species Regulations No person shall take or possess any native species of wild animal, or any eggs, or offspring thereof, that is endangered with state-wide extinction.	Updated surveys in 1993 and 1994 found state-listed threatened Sloan's crayfish populations in sections of Paddys Run, including sections directly adjacent to OU1 area. Wastewater controls will be designed to minimize negative impacts on Paddys Run, to the maximum practicable extent during and after remedial activities. Process wastewater will not be discharged to Paddys Run from any OU1 operation. Stormwater flows from the new facilities area, for storms greater than the 25 year, 24 hour will discharge to Paddys Run. Mitigatory requirements will be determined on a site-wide basis and presented as an outcome of the Soil Remediation Project design process, for appropriate implementation. The *Waste Excavation Plan for the Operable Unit 1 Remediation System Design* provides detail on the design of stormwater controls.	DCD Section 2.3.5.3 and *Waste Excavation Plan for the. Operable Unit 1 Remediation System Design* Section 5
Wildlife Protection	16 USC 66 *et seq.*, Fish and Wildlife Coordination Act Requires consultation with other state agencies for any activities which might affect any body of water for the purpose of conserving fish and wildlife resources.	Remedial activities at OU1 may have the potential to affect wildlife and fish in Paddys Run. Wastewater controls will be designed to minimize negative impacts on Paddys Run, to the maximum practicable extent during and after remedial activities. Process wastewater will not be discharged to Paddys Run from any OU1 operation. Stormwater flows from the new facilities area, for storms greater than the 25 year, 24 hour will discharge to Paddys Run. The *Waste Excavation Plan for the Operable Unit 1 Remediation System Design* provides detail on the design of stormwater controls.	DCD Section 2.3.5.3 and *Waste Excavation Plan for the Operable Unit 1 Remediation System Design* Section 5

149

TABLE A-1
(Continued)

Category	Applicable Requirements	Compliance Strategy	Addressed In
Historic Preservation	16 USC 469, Archaeological and Historic Preservation Act Implemented through 36 CFR 800 Requires preservation of artifacts and data associated with archaeological finds.	Historical data and artifacts are not expected to be discovered or destroyed during remedial activities at OU1. Nevertheless, the requirements of the law are applicable.	n/a
Historic Preservation	16 USC 470 *et seq.*, National Historic Preservation Act Implemented through 36 CFR 800 DOE must take into account the effect of an undertaking on historic properties and accord the Advisory Council on Historic Preservation a reasonable opportunity to comment. Historic properties are described as any prehistoric or historic district, building, site, structure, or object included in, or eligible for inclusion in the National Register of Historic Places. This term includes artifacts, records, and remains that are related to and located within such properties. Historic properties that are substantially altered or demolished must be recorded for future use and reference.	Areas adjacent to OU1 boundaries will be surveyed pursuant to the programmatic agreement by the DOE, the Advisory Council on Historic Preservation, and the Ohio Historic Preservation Office. The programmatic agreement stipulates what actions are required for compliance with the National Historic Preservation Act. Historic sites listed or eligible for listing in the *National Register of Historic Places* are not present within OU1 nor is it expected that any will be. Nevertheless, the requirements of the law are applicable.	n/a
Historic Preservation	16 USC 470 (aa) - 470 (11), Archaeological Resources Protection Act Requires permit for removal of any archaeological resources from federal lands.	OU1 is located on federal land. Although archeological resources are not expected to be encountered on the site, the requirements of the law remain applicable to OU1 remedial activities.	n/a
Historic Preservation	16 USC 431-433 and USC 461-467, Antiquities Act and Historic Sites Act. Requires that no person may appropriate, excavate, injure or destroy any historical or prehistoric ruin or monument or any object or antiquity situated or controlled by the U.S. Government without an applicable permit. Also requires the identification and preservation of cultural resources on federal lands.	Although OU1 is not expected to contain cultural resources or natural landmarks of significance, it is located on federal land and the law is applicable should any cultural resources be discovered during remedial actions on site.	n/a
Historic Preservation	25 USC 3001, Native American Graves Protection and Repatriation Act Provides for return of human remains and cultural objects from Native American graves to affiliated tribes.	Although OU1 does not contain known American Indian burial grounds, this law would apply should graves and human remains be discovered during excavation of the waste pits.	n/a

TABLE A-1
(Continued)

Category	Applicable Requirements	Compliance Strategy	Addressed In
Historic Preservation	42 USC 1996, American Indian Religious Freedom Act Provides for tribal access by native peoples to grave sites and sites of cultural, symbolic, or religious significance.	Although no sites of this nature have been identified at OU1, the law is applicable to federal lands and activities.	n/a
Historic Preservation	Executive Order 11593, Protection and Enhancement of Cultural Environment. Requires an inventory of site for potential historic places for eligibility in the *National Register of Historic Places*.	The requirement is applicable to activities at OU1. An updated inventory will be completed prior to remedial action. It is not expected that any sites of this nature will be identified at OU1.	n/a
Siting	10 CFR 1022, Protection of Wetlands and Floodplain Management 10 CFR 1022 contains the DOE regulation implementing Executive Order 11990 and 11988. Executive Order 11990 requires that Federal agencies take action to avoid adversely impacting wetlands wherever possible, to minimize wetlands destruction, to preserve the values of wetlands, and to prescribe procedures to implement the policies and procedures of the Executive Order. Executive Order 11988 requires Federal agencies undertaking actions within a floodplain to evaluate the potential the action has for adverse impact on the floodplain. If it is determined that adverse impacts could occur, the effects of the action must be minimized to the extent practical.	Approximately 36 acres of jurisdictional wetlands were identified on the site as the result of the 1993 wetland delineation. Wetland impacts will be minimized during remedial activities by avoiding these areas to the maximum extent possible. Mitigatory requirements will be determined on a site-wide basis and presented as an outcome of the Soil Remediation Project design process, for appropriate implementation. OU1 is in the immediate vicinity of the Paddys Run Floodplain. Remediation activities will be undertaken while minimizing impacts to the floodplain primarily through minimizing activities within the floodplain which could cause substantial adverse changes to the floodplain. The final topography of the site and its impact on the floodplain will be addressed on a site-wide basis and presented as an outcome of the Soil Remediation Project design process, for appropriate implementation.	DCD Section 2.3.5.3 and Soil Remediation Project Remedial Design Package
Construction	33 CFR 330, Nationwide Permit Program (33 CFR 323 and OAC 3745-32) The Army Corps of Engineers authorizes discharges of dredge or fill material into wetlands and waters of the United States under its Nationwide Permit (33 CFR 330) or Individual Permit Programs (33 CFR 323). Section 401 State Water Quality Certification (OAC 3745-32) is also required for these types of discharges. Approximately 4.9 acres of jurisdictional wetlands will be impacted as a result of the Operable Unit One Remedial Action and will be subjected to the substantive requirements of these regulations.	Discharges of dredged and fill material associated with the OU1 remedial action will be conducted in accordance with the substantive requirements of Nationwide Permit 26 - Headwaters and Isolated Waters Discharges and its corresponding Section 401 State Water Quality Certification. Wetland mitigatory requirements for OU1 impacts will be addressed under the site-wide wetland mitigation plan currently being developed by DOE as part of the Soil Remediation Project Remedial Design Package.	Soil Remediation Project Remedial Design Package

2038

151

TABLE A-2
CHEMICAL-SPECIFIC ARARS
(APPLICABLE REQUIREMENTS; RELEVANT AND APPROPRIATE REQUIREMENTS; TBCs)

Category	Applicable Requirements	Compliance Strategy	Addressed In
Surface Water Discharges	OAC 3745-1 Ohio Water Quality Standards It is the purpose of these Water Quality Standards to establish minimum water quality requirements for all surface waters of the State, thereby protecting public health and welfare; and to enhance, improve, and maintain water quality as provided under the laws of the State of Ohio, and ORC 6111.041, the Federal Clean Water Act, 33 U.S.C. Section 1251 *et seq.* Whenever two or more use designations apply to the same surface water, the more stringent criteria of each use designation will apply.	OU1 remediation activities will not result in the direct discharge of wastewater to a water of the State. Wastewater generated by OU1 remediation activities will be pretreated and discharged to the existing FEMP Wastewater Treatment System where it will be combined with other site wastewaters for treatment. Pretreatment of OU1 wastewater will consist of solids removal. The method of pretreatment is discussed in detail in the *Process Description for the Remediation System Design*. Treated wastewaters will be discharged in accordance with the requirements of the FEMP NPDES permit and applicable numeric and narrative water quality standards promulgated in OAC 3745-1. The FEMP NPDES permit will be modified to incorporate OU1 discharges in the event such a change is warranted.	*Process Description for the Remediation System Design* Section 7
Surface Water Discharges	OAC 3745-01-04 Criteria Applicable to All Waters The following general water quality criteria shall apply to all surface waters of the State including mixing zones. To every extent practical and possible as determined by the director, these waters shall be: (A) Free from suspended solids or other substances that enter the waters as a result of human activity and that will settle to form putrescent or otherwise objectionable sludge deposits, or that will adversely affect aquatic life; (B) Free from floating debris, oil, scum and other floating materials entering the waters as a result of human activity in amounts sufficient to be unsightly or cause degradation; (C) Free from materials entering the waters as a result of human activity producing color, odor or other conditions in such a degree as to create a nuisance; (D) Free from substances entering the waters as a result of human activity in concentrations that are toxic or harmful to human, animal or aquatic life and/or are rapidly lethal in the mixing zone; (E) Free from nutrients entering the waters as a result of human activity in concentrations that create nuisance growths of aquatic weeds and algae.	OU1 remediation activities will not result in the direct discharge of wastewater to a water of the State. Wastewater generated by OU1 remediation activities will be pretreated and discharged to the existing FEMP Wastewater Treatment System where it will be combined with other site wastewaters for treatment. Pretreatment of OU1 wastewater will consist of solids removal. The method of pretreatment is discussed in detail in the *Process Description for the Remediation System Design*. Treated wastewaters will be discharged in accordance with the requirements of the FEMP NPDES permit and applicable numeric and narrative water quality standards promulgated in OAC 3745-1. The FEMP NPDES permit will be modified to incorporate OU1 discharges in the event such a change is warranted.	*Process Description for the Remediation System Design* Section 7

TABLE A-2
(Continued)

Category	Applicable Requirements	Compliance Strategy	Addressed In
Surface Water Discharges	OAC 3745-1-07, Table 7-1 Numerical and Narrative Criteria for Aquatic Life Habitat and Water Supply Use Designation Surface Waters in the State of Ohio must comply with the maximum concentrations of each contaminant of concern listed in Table I-5 and I-6 in Attachment I for inside and outside the mixing zones of the receiving water to protect warm water aquatic habitats.	OU1 remediation activities will not result in the direct discharge of wastewater to a water of the State. Wastewater generated by OU1 remediation activities will be pretreated and discharged to the existing FEMP Wastewater Treatment System where it will be combined with other site wastewaters for treatment. Pretreatment of OU1 wastewater will consist of solids removal. The method of pretreatment is discussed in detail in the *Process Description for the Remediation System Design*. Treated wastewaters will be discharged in accordance with the requirements of the FEMP NPDES permit and applicable numeric and narrative water quality standards promulgated in OAC 3745-1. The FEMP NPDES permit will be modified to incorporate OU1 discharges in the event such a change is warranted.	*Process Description for the Remediation System Design* Section 7
Surface Water Discharges	OAC 3745-1-07, Table 7-10, Outside Mixing Zone Maximum Criteria for Water Hardness Dependent Parameters in Warm Water Habitats Table I-7 in Attachment I contains the numerical limits on cadmium, copper, chromium, lead, and silver.	OU1 remediation activities will not result in the direct discharge of wastewater to a water of the State. Wastewater generated by OU1 remediation activities will be pretreated and discharged to the existing FEMP Wastewater Treatment System where it will be combined with other site wastewaters for treatment. Pretreatment of OU1 wastewater will consist of solids removal. The method of pretreatment is discussed in detail in the *Process Description for the Remediation System Design*. Treated wastewaters will be discharged in accordance with the requirements of the FEMP NPDES permit and applicable numeric and narrative water quality standards promulgated in OAC 3745-1. The FEMP NPDES permit will be modified to incorporate OU1 discharges in the event such a change is warranted.	*Process Description for the Remediation System Design* Section 7
Surface Water Discharges	OAC 3745-1-07, Table 7-11 Outside Mixing Zone 30-Day Average Criteria for Water Hardness Dependent Parameters in Warm Water Habitats Table I-8 in Attachment I contains the average numerical limits for cadmium, copper, chromium, lead, and silver.	OU1 remediation activities will not result in the direct discharge of wastewater to a water of the State. Wastewater generated by OU1 remediation activities will be pretreated and discharged to the existing FEMP Wastewater Treatment System where it will be combined with other site wastewaters for treatment. Pretreatment of OU1 wastewater will consist of solids removal. The method of pretreatment is discussed in detail in the *Process Description for the Remediation System Design*. Treated wastewaters will be discharged in accordance with the requirements of the FEMP NPDES permit and applicable numeric and narrative water quality standards promulgated in OAC 3745-1. The FEMP NPDES permit will be modified to incorporate OU1 discharges in the event such a change is warranted.	*Process Description for the Remediation System Design* Section 7

152

2038

153

TABLE A-2
(Continued)

Category	Applicable Requirements	Compliance Strategy	Addressed In
Surface Water Discharges	OAC Table 7-12 Inside Mixing Zone Maximum Criteria for Water Hardness Dependent Criteria in Warm Water Habitats Table I-8 in Attachment I contains numerical limits for cadmium, copper, chromium, lead, and silver.	OU1 remediation activities will not result in the direct discharge of wastewater to a water of the State. Wastewater generated by OU1 remediation activities will be pretreated and discharged to the existing FEMP Wastewater Treatment System where it will be combined with other site wastewaters for treatment. Pretreatment of OU1 wastewater will consist of solids removal. The method of pretreatment is discussed in detail in the *Process Description for the Remediation System Design*. Treated wastewaters will be discharged in accordance with the requirements of the FEMP NPDES permit and applicable numeric and narrative water quality standards promulgated in OAC 3745-1. The FEMP NPDES permit will be modified to incorporate OU1 discharges in the event such a change is warranted.	*Process Description for the Remediation System Design* Section 7
Surface Water Discharges	OAC 3745-1-07 Outside Mixing Zone Maximum Criteria for pH dependent Parameters in warm water Aquatic Habitats Table I-10 in Attachment I contains the numerical limits for pentachlorophenol. OAC 3745-1-07 Inside the Mixing Zone Maximum Criteria for pH dependent Parameters in warm water Aquatic Habitats Table I-11 in Attachment I contains the numerical limits for pentachlorophenol.	OU1 remediation activities will not result in the direct discharge of wastewater to a water of the State. Wastewater generated by OU1 remediation activities will be pretreated and discharged to the existing FEMP Wastewater Treatment System where it will be combined with other site wastewaters for treatment. Pretreatment of OU1 wastewater will consist of solids removal. The method of pretreatment is discussed in detail in the *Process Description for the Remediation System Design*. Treated wastewaters will be discharged in accordance with the requirements of the FEMP NPDES permit and applicable numeric and narrative water quality standards promulgated in OAC 3745-1. The FEMP NPDES permit will be modified to incorporate OU1 discharges in the event such a change is warranted.	*Process Description for the Remediation System Design* Section 7
Surface Water Discharges	OAC 3745-1-07 Lower Miami River Temperature Criteria in Fahrenheit and degrees (Celsius) Table I-12 in Attachment I contains the acceptable monthly temperatures for water discharged to the Lower Great Miami River.	OU1 remediation activities will not result in the direct discharge of wastewater to a water of the State. Wastewater generated by OU1 remediation activities will be pretreated and discharged to the existing FEMP Wastewater Treatment System where it will be combined with other site wastewaters for treatment. Pretreatment of OU1 wastewater will consist of solids removal. The method of pretreatment is discussed in detail in the *Process Description for the Remediation System Design*. Treated wastewaters will be discharged in accordance with the requirements of the FEMP NPDES permit and applicable numeric and narrative water quality standards promulgated in OAC 3745-1. The FEMP NPDES permit will be modified to incorporate OU1 discharges in the event such a change is warranted.	*Process Description for the Remediation System Design* Section 7

TABLE A-2
(Continued)

Category	Applicable Requirements	Compliance Strategy	Addressed In
Air Discharges	OAC 3745-17-07 Ohio Ambient Air Quality Standards Visible particulate emissions from any stack may exceed twenty percent opacity, as a six minute average, for not more than six consecutive minutes in any sixty minutes, but shall not exceed sixty percent opacity, as a six-minute average, at any time.	The State standard for particulate emissions is an ARAR because it places a time limit on particulate emissions that may work in tandem with the Federal annual average. Design includes a scrubber and HEPA filter in the dryer off-gas system to remove particulates. This process is described in more detail in the *Process Description for the Remediation System Design*.	*Process Description for the Remediation System Design* Sections 4,5

154

2038

155

TABLE A-2
(Continued)

Category	To-Be-Considered Requirements	Compliance Strategy	Addressed In
Soil Remediation	<u>40 CFR 761.125 Requirements for PCB Spill Cleanup</u> PCBs at concentrations greater than 50 ppm are subject to decontamination TSCA requirements in 40 CFR 761.120(b). PCB containers containing non-liquid PCBs, such as contaminated soil, rags, and debris designated for disposal may be stored temporarily (up to 30 days from the date of removal) in an area that does not comply with the storage building requirements at 40 CFR 761.65 (b). <u>40 CFR 761.125(c)</u> Soils in non-restricted access areas contaminated by a PCB spill will be decontaminated to 10 ppm PCB by weight, provided that the soil is excavated to a minimum depth of 10 inches. The excavated soils will be replaced with clean soils, i.e., containing <1 ppm PCB, and the spill site will be restored (e.g., replacement of turf) [40 CFR 761.125(c)(4)(v)]. For soils in restricted access areas, decontaminate to 25 ppm PCB by weight [40 CFR 761.125(c)(3)(v)].	Concentrations of PCBs at OU1 are expected to be less than 50 ppm. This regulation would then be considered guidance to be considered. PCB containing/contaminated materials are addressed in various ways within the OU1 remediation activities, and subsequently within the design. The *Waste Excavation Plan for the Operable Unit 1 Remediation System Design* (specifically Appendix A) is the primary design document in which this is discussed, both in terms of debris type materials and soils. Relative to contaminated soils, Section A.4 of the *Waste Excavation Plan for the Operable Unit 1 Remediation System Design* presents the OU1 soils management strategy, including soil remediation levels, and soils disposition. The amount of contaminated soil excavated during the remedial action will be based upon the final remediation levels presented therein. The management of other OU1 materials is discussed in Sections A.3 and A.4 of Appendix A of the *Waste Excavation Plan for the Operable Unit 1 Remediation System Design*. Section A.3 addresses the handling of transformers and intact drums. Section A.4 addresses the handling of oversized materials, including potential placement of such materials in the off-site disposal facility, assuming that waste acceptance criteria are met.	*Waste Excavation Plan for the Operable Unit 1 Remediation System Design* Appendix A and Record of Decision for OU5

TABLE A-2
(Continued)

Category	To-Be-Considered Requirements	Compliance Strategy	Addressed In
Radiation	DOE Order 5400.5 Radiation Protection of the Public and Environment DOE Order 5400.5 sets derived concentration guides (DCG) for radioactive emissions to air resulting from DOE activities. The DCG values for internal exposure are based on a committed dose equivalent of 100 mrem for the radionuclides taken into the body during one year. The DCGs comply with 40 CFR Part 61, Subpart H criterion of 10 mrem/year effective dose equivalent. The DCGs are not release limits. They are one step in the process of controlling releases. DOE uses the guides to screen waste streams for application of best available technologies. If the concentration of a contaminant is above the DCG, the best available technology is applied to bring the annual averages of the contaminant below the DCG at the point of discharge. See Attachment I, Table I-21.	The effective dose equivalent by any member of the public entering a Controlled Area is limited to 100 mrem per year. At the FEMP, TLDs are required to be worn to enter the Controlled Area and personnel entering the Controlled Area are not expected to receive more than 100 mrem in a year. Emission estimates have been prepared for area and point source air emissions to demonstrate that no off-site member of the general public will receive an annual effective dose equivalent in excess of the 10 mrem per year standard. Each potential air emission source was evaluated (by modeling) to determine its contribution to the annual release from OU1 activities and if continuous monitoring of the source is required. Results are provided in the draft report *Assessment of Radiological Hazards Associated with OU1 Remedial Design*. Sources with the potential for releases that could exceed the 0.1 mrem per year dose to any member of the general public will be continuously monitored. These sources are the open pits, feed and storage piles, and drying/blending facilities. Sources with the potential to emit radionuclides below the 0.1 mrem per year dose will be subject to confirmatory periodic sampling. This applies to the loadout facility and dryer stack.	DCD Section 2.2.1.3
Radiation	DOE Order 5400.5 Radiation Protection of the Public and Environment To prevent buildup of radionuclide concentrations in sediment, liquid process waste streams containing radioactive material in settle-able solids may be released to natural waterways if the concentration of radioactive material in the solids present in the waste stream do not exceed 5 pCi/g above background levels of settle-able solids of alpha-emitting radionuclides or 50 pCi/g above background level of settle-able solids for beta-gamma-emitting radionuclides. To protect native animal aquatic organisms, the absorbed dose to these organisms shall not exceed 1 rad per day from exposure to the radioactive material in liquid wastes discharged to material waterways.	OU1 remediation activities will not result in the direct discharge of wastewater to a water of the State. Wastewater generated by OU1 remediation activities will be pretreated and discharged to the existing FEMP Wastewater Treatment System where it will be combined with other site wastewaters for treatment. Pretreatment of OU1 wastewater will consist of solids removal. The method of pretreatment is discussed in detail in the *Process Description for the Remediation System Design*. Treatment of the combined wastewaters will be undertaken so as to meet the FEMP NPDES permit limits and conditions.	*Process Description for the Remediation System Design* Section 7

2038

TABLE A-2
(Continued)

Category	To-Be-Considered Requirements	Compliance Strategy	Addressed In
Radiation	DOE Order 5400.5 Radiation Protection of the Public and Environment The DCGs are given for different lung retention classes (noted as D,W, or Y, where D equals a removal half-time of 0.5 days, W equals a removal half-time of 50 days, and Y equals a removal half-time of 500 days). The derived concentration guides can be found in Table I-21 in Attachment I.	Emission estimates have been prepared for area and point source air emissions to demonstrate that no off-site member of the general public will receive an annual effective dose equivalent in excess of the 10 mrem per year standard. Each potential air emission source was evaluated (by modeling) to determine its contribution to the annual release from OU1 activities and if continuous monitoring of the source is required. Results are provided in the draft report *Assessment of Radiological Hazards Associated with OU1 Remedial Design*. Sources with the potential for releases that could exceed the 0.1 mrem per year dose to any member of the general public will be continuously monitored. These sources are the open pits, feed and storage piles, and drying/blending facilities. Sources with the potential to emit radionuclides below the 0.1 mrem per year dose will be subject to confirmatory periodic sampling. This applies to the loadout facility and dryer stack.	DCD Section 2.2.1.3
Radiation	DOE Order 5400.5 Residual plus natural dose limit for public exposure to residual radioactive material are 100 mrem effective dose equivalent per year. Guidelines for residual concentrations of radionuclides in soil shall be derived from the basic dose limits by means of an environment pathway analysis using specific property data where available. Procedures for these derivations are given in DOE/CH-8901. Residual concentrations of radioactive material in soil are defined as those in excess of background concentrations averaged over an area of 100 square meters. Control and Stabilization and Administrative Control features shall be designed to provide to the extent reasonably achievable, an effective life of 50 years with a minimum life of at least 25 years. Groundwater shall be protected in accordance with legally applicable Federal and State standards.	All waste pit material will be removed from OU1. The only residual material will be soil that meets the Final Remediation Levels established by the OU5 remedial action. The Final Remediation Levels have been developed in accordance with this requirement. Compliance will be demonstrated on a sitewide basis following remediation of the entire site by the Soil Remediation Project. Some material from OU1 will be placed into the On-Site Disposal Facility. The disposal facility will be designed to meet this requirement and demonstration of compliance will be performed by the Soil Remediation Project.	Soil Remediation Project Remedial Design Package

TABLE A-3
ACTION-SPECIFIC ARARS
(APPLICABLE REQUIREMENTS; RELEVANT AND APPROPRIATE REQUIREMENTS; TBCs)

Category	Applicable Requirements	Compliance Strategy	Addressed In
Radon	40 CFR Part 61, Subpart Q Emission of radon-222 from DOE facilities is limited to 20 pCi/m^{2}s on an annual average and 5 pCi/m^{2}s annual average for the maximum allowable off-site impact.	A source is defined by 40 CFR 61 Subpart Q to be any building structure, pile impoundment, or area used for interim storage or disposal of waste material containing radium in sufficient concentrations to emit radon-222 in excess of this standard prior to remedial action. Therefore, this requirement does not apply to the OU1 remedial action. This interpretation of 40 CFR 61 Subpart Q is consistent with that for the EPA approved ROD for OU4.	n/a
Stormwater Control	40 CFR 122.26 (OAC 3745-38) Discharge of Storm Water Runoff Storm water runoff from landfills, construction sites, and industrial activities must be monitored and controlled. A Storm Water Pollution Prevention Plan (SWPPP) is required for construction activities which result in a total land disturbance of 5 or more acres.	Remedial activities will comply with an approved FEMP SWPPP which will include specific inspection and monitoring criteria applicable to all site projects. Additional stormwater measures are discussed in Subsection 2.3.5.3 of the DCD and Section 5 of the *Waste Excavation Plan for the Operable Unit 1 Remediation System Design*. Guidelines set forth in rainwater and land development, Ohio's standard for stormwater management stream protection, 1996, will be followed.	DCD Section 2.3.5.3 and *Waste Excavation Plan for the Operable Unit 1 Remediation System Design* Section 5
Hazardous Waste	ORC 3734.02(H) Digging Where Hazardous or Solid Waste was Located Filling, grading, excavating, building, drilling, or mining on land where hazardous waste or solid waste facility was operated is prohibited without prior approval from the Director of the Ohio EPA.	This requirement needs no further discussion relative to attainment, since Ohio EPA concurrence on the ROD has met the intent of this requirement.	Record of Decision for OU1

158

2038

151

TABLE A-3
(Continued)

Category	Applicable Requirements	Compliance Strategy	Addressed In
Hazardous Waste	OAC 3745-56-51, 54 and 58; Waste Piles These requirements specify design and operating requirements, monitoring and inspection, closure and post-closure care. Specific substantive requirements include: (A) Run-on/run-off control systems must be designed and installed to prevent flow onto or runoff from the active pile during peak flows from a 25-year, 24-hour storm event. (B) Collection and hold facilities associated with run-on/run-off control systems must be emptied after storms. (C) Piles must be covered or otherwise managed to prevent wind dispersal. (D) Waste piles must be inspected weekly and after storms to ensure the integrity of run-on and run-off controls. (E) At closure, owners must remove or decontaminate all waste residues, contaminated system components, contaminated subsoils and structures, and equipment contaminated with waste and leachate and manage as hazardous waste.	The requirements for hazardous waste piles are potentially applicable only to waste excavated from Pits 4 and 5. Based on the design described in the *Process Description for the Remediation System Design*, however, this requirement does not apply to the processing of any OU1 wastes. Specifically, these requirements do not apply to the feed piles that are within the OU1 waste processing facility as these piles are neither for long-term storage nor treatment. In addition, although the contingency stockpile could, at some point, be considered long-term storage, no Pit 4 or Pit 5 wastes will be stored therein. Waste piles will be inspected on a weekly basis after storm events. Waste piles generated during the course of the project will be managed in accordance with the substantive provisions of these requirements. Under the design build and operate concept feedstock piles associated with the process facility would be contained under roof and would be located on a concrete surface with run-on/run-off collection control. Feedstock and contingency piles would be managed to control wind dispersal. Upon completion of remedial activities, the processing facility would be remediated to remove all processing facilities and residual contamination consistent with established remedial levels. The ARASA contractor will be required to meet the substantive provisions of the requirements.	Record of Decision for OU1, Waste Excavation Plan for the OU1 Remediation System Design, Process Description, Sections 2.0 and 3.0, General Arrangement Drawings
Well Abandonment	OAC 3745-9-10 Ohio Water Well Standards Abandonment of Test Holes and Wells.	These requirements for closure of test holes and wells at the FEMP are implemented through the *Sitewide CERCLA Quality Assurance Program Plan*.	*Sitewide CERCLA Quality Assurance Program Plan* Section 5.2 and Appendix J
Air Discharges	OAC 3745-15-07(A) Ohio Air Pollution Control Regulations Describes forms of air pollution nuisances and prohibits their emission or escape.	Both excavation and waste treatment processes have the potential to generate prohibited fugitive emissions. Fugitive and blowing dust carrying contamination will be controlled on excavation faces and spoil piles by standard practices described in the *Waste Excavation Plan for the Operable Unit 1 Remediation System Design*. Shredding and drying activities will take place in enclosures. Design includes a scrubber and HEPA filter in the dryer off-gas system to remove particulates. This process is described in more detail in the *Process Description for the Remediation System Design.*	*Waste Excavation Plan for the Operable Unit 1 Remediation System Design* Sections 4 and 5

TABLE A-3
(Continued)

Category	Applicable Requirements	Compliance Strategy	Addressed In
Fugitive Dust	OAC 3745-17-08 Control of Fugitive Dust Requires the minimization or elimination of visible emissions of fugitive dust generated during grading, loading, or construction operations and other practices which emit fugitive dust.	The implementation of remedial action alternatives will require the movement of dirt and other material likely to result in fugitive dust emissions. Fugitive and blowing dust carrying contamination will be controlled on excavation faces and spoil piles by standard practices described in the *Waste Excavation Plan for the Operable Unit 1 Remediation System Design*. Shredding and drying activities will take place in enclosures with HEPA ventilation.	*Waste Excavation Plan for the Operable Unit 1 Remediation System Design* Section 5
Air Discharges	OAC 3745-21-02(C) and OAC 3745-21-03(D) Ambient air quality standards and guidelines and methods of ambient air quality measurements (for non-methane hydrocarbons). Mean ambient concentration of non-methane hydrocarbons not to exceed 160 μg/cubic meter (0.24 ppm as carbon) between 6 and 9 a.m.; methods for determining ambient concentration of non-methane hydrocarbons.	METSIM calculations indicate that non-methane hydrocarbons will not be present in the dryer off-gas.	*Process Description for the Remediation System Design* Section 5 and the *METSIM Process Simulation Model, Pit Waste Indirect Thermal Drying*
Air Discharges	OAC 3745-21-07 (G)(2) Control of emissions of organic material from stationary sources. Emissions of photochemical reactive material from processes, including drying, not to exceed 40 lbs/day, with a peak of 8 lbs/hour.	An off-gas composition determination was performed and it was determined that organics would be present in the off-gas. Therefore, a scrubber will be provided to treat the off-gas prior to discharge. The off-gas composition and scrubber are discussed in the *Process Description of the Remediation System Design.*	*Process Description for the Remediation System Design* Sections 4,5
Air Discharges	OAC 3745-31-05(A)(3) Permit to Install The director shall issue a permit to install if he determines that the installation or modification and operation of the air contaminant source will employ the best available technology.	Although an administrative Permit to Install is not required for alternatives involving treatment, the substantive requirements of this section must be met by employing Best Available Technology (BAT) for treating particulate and off-gas emissions. Condensers and scrubbers will be employed as BAT.	DCD Section 2.1.4
NEPA	10 CFR 1021.2 DOE actions must be subjected to NEPA evaluation as outlined by CEQ regulations in 40 CFR 1500-1508.	On June 13, 1994, the DOE issued a revised policy statement on NEPA. The new policy allows DOE, at CERCLA sites, to rely on the CERCLA process to satisfy the procedural aspects of NEPA. NEPA values have been incorporated into the Final Operable Unit 1 Feasibility Study Report. Any further NEPA documentation will be prepared for this project in accordance with established site procedures.	Final Operable Unit 1 Feasibility Study Report

TABLE A-3
(Continued)

Category	Relevant and Appropriate Requirements	Compliance Strategy	Addressed In
Air Discharges	40 CFR 60.670 Subpart OOO Stack emissions from affected facilities shall not: • Contain particulate matter in excess of 0.05 g/dscm; or • Exhibit greater than 7 percent opacity, unless the stack emissions are discharged from an affected facility using a wet scrubbing control device.	These standards are relevant and appropriate to OU1 remedial activities since they specify requirements for shredder and conveyor systems. The standards will be considered when determining BAT requirements for these systems in accordance with OAC 3745-31-05(A)(3). Shredder and conveyor systems will be enclosed with dust suppression system to meet this requirement. Also, design includes a scrubber and HEPA filter to remove particulates prior to discharge from the dryer.	*Process Description for the Remediation System Design* Sections 4,5
BMP Program	40 CFR 125.100 and 125.104 Discharge of Treatment System Effluent Best Management Practices Develop and implement a BMP program to prevent the release of toxic or hazardous pollutants to waters of the U.S. Development and implementation of a sitewide BMP Program is also required as a condition of the FEMP NPDES Permit.	This requirement is programmatic and is met by the approved Best Management Practices Plan currently in place at the FEMP. The FEMP BMP Plan may require revision to include any special circumstances involving this remedial action.	BMP Plan
Solid Waste	40 CFR 241 Subpart B (OAC 3745-27), RCRA Subtitle D On-Site Solid Nonhazardous Waste Management Facilities Design standards are presented in the following citations: 241.200-2, 241.201-2, 241.202-2, 241.203-2, 241.204-2, 241.205-2, 241.206-2, 241.207-2, 241.208-2, 241.209-2, and 241.210-2.	Land disposal of solid waste will not occur in OU1. Solid waste from OU1 destined for on-site disposal will be sent to the On-Site Disposal Facility. The OU1 selected remedy involves handling residual contaminated soils and oversized materials in accordance with the OU5 and OU3 RODs. Appendix A of the *Waste Excavation Plan for the Operable Unit 1 Remediation System Design*, which discusses disposal of these materials on-site, requires that OU1 generated waste meet the waste acceptance criteria of the On-Site Disposal Facility. The design of the On-Site Disposal Facility, including the establishment of final design criteria, will be handled through the Soil Remediation Project remedial design efforts, with the impact of any changes to the OU1 design reflected in future OU1 design efforts.	*Waste Excavation Plan for the Operable Unit 1 Remediation System Design* Appendix A

TABLE A-3
(Continued)

Category	Relevant and Appropriate Requirements	Compliance Strategy	Addressed In
Hazardous Waste	40 CFR 262.11 (OAC 3745-52-11) Hazardous Waste Determinations Any generator of waste must determine whether or not the waste is hazardous.	Excavation, size reduction, homogenization, blending, and drying of pit wastes are process activities which result in generation of a single waste stream. The newly generated waste is the waste stream that will be shipped off-site for disposal and represents the waste that must comply with regulatory requirements and disposal facility waste acceptance criteria. As documented in the OU1 FS/PP and ROD, this waste stream does not contain RCRA listed wastes; and in accordance with US EPA guidance for Superfund sites and 40 CFR 262.11(c), the waste will be sampled for RCRA characteristics only. The statistical methods that will be used to demonstrate compliance with regulatory criteria and WAC will be included in the RA Sampling and Analysis Plan.	Remedial Action Work Plan Sampling and Analysis Plan
Hazardous Waste	Closure 40 CFR 264, Subpart G (OAC 3745-55-(11-16)) Operator must close facility in a manner that: • Minimizes the need for further maintenance • Minimizes post-closure escape of hazardous constituents • Complies with specific unit type closure requirements	As documented in the Draft Director's Final Findings and Orders between Ohio EPA and DOE, demonstration of compliance with substantive closure and post-closure requirements for hazardous waste management units will be documented in remedial design and remedial action deliverables. DOE will provide a cross-reference to Ohio EPA that will contain an index to closure and post-closure requirements within the RD/RA deliverables. The RD/RA deliverables will be submitted for review in accordance with the Amended Consent Agreement.	Waste Excavation Plan for the Operable Unit 1 Remediation System Design
Air Discharges	40 CFR 264.1030 - 264.1036, Subpart AA Air Emission Standards for Process Vents • Reduce total organic emissions below 1.4 kg/h (3 lb/h) and 2.8 Mg/yr (3.1 tons/yr) • Control device (condenser or absorber) must recover organic vapors with an efficiency of 95 percent or greater.	No regulations have been promulgated for process vents associated with thermal drying; however, 40 CFR 264.1030 - .1036 will be relevant and appropriate but not applicable to air emission standards for process vents associated with thermal drying. Design includes a scrubber and condenser in the off-gas treatment system. The *Process Description for the Remediation System Design* includes a discussion of the off-gas treatment system.	*Process Description for the Remediation System Design* Sections 4,5

162

2038

163

TABLE A-3
(Continued)

Category	Relevant and Appropriate Requirements	Compliance Strategy	Addressed In
Hazardous Waste	Post-Closure 40 CFR 264 Subpart G 40 CFR 264.117 (OAC 3745-55-17) 40 CFR 264.119 (OAC 3745-55-19) Post-closure care and use of property for a period as necessary to protect human health and the environment including: • Access controls • Monitoring Post-closure notices must include deed notation/use restriction.	As documented in the Draft Director's Final Findings and Orders between Ohio EPA and DOE, demonstration of compliance with substantive closure and post-closure requirements for hazardous waste management units will be documented in remedial design and remedial action deliverables. DOE will provide a cross-reference to Ohio EPA that will contain an index to closure and post-closure requirements within the RD/RA deliverables. The RD/RA deliverables will be submitted for review in accordance with the Amended Consent Agreement.	Waste Excavation Plan for the Operable Unit 1 Remediation System Design.
Monitoring	OAC 3745-57-91 and 92, Miscellaneous Methods of Waste Treatment Parts 91 and 92 include requirements for miscellaneous units environmental performance standards and monitoring, analysis, inspection, response, reporting, and corrective action.	This ARAR will be met by the implementation of the other ARARs that are protective of human health and the environment. Releases to the environment will be controlled by using a ventilation system with a scrubber and HEPA filter (for air discharges) and a stormwater/wastewater collection system (water discharges).	n/a
CAMUs	Corrective Action for SWMUs 40 CFR Subpart S 40 CFR 264.552,.553 Corrective Action Management Units (CAMUs) might be designed at the site as areas where remediation wastes (solid, hazardous, or contaminated media and debris) might be placed during the process of remediation. Temporary units (TUs) consisting of tanks and container storage units might be used to store and treat hazardous waste during the process of corrective action.	As an ARAR, the CAMU designation does not apply to waste disposed off-site; however, it does apply to waste that is managed on-site. OU1 pit wastes will be disposed of at an off-site facility and therefore, must meet all regulatory and disposal facility requirements. CAMUs can apply to residual soils remaining on-site. As such, residual OU1 soils will managed in accordance with the OU5 ROD which designates the FEMP site as a CAMU.	Record of Decision for OU5

TABLE A-3
(Continued)

Category	To-Be-Considered Requirements	Compliance Strategy	Addressed In
Monitoring	DOE Order 5400.1 @ p. iv - 1 Since each DOE facility is unique, the need and level of effort for monitoring programs shall be determined by the appropriate field organization on a case-by-case basis.	Operable Unit 1 is part of a DOE facility and is subject to these orders. The existing FEMP sitewide monitoring program will be used for the remediation facilities. If necessary, the existing program may be modified, but that decision will not be made until later in the project. The *Remedial Action Work Plan* will discuss sitewide monitoring.	*Remedial Action Work Plan*
Monitoring	DOE Order 5400.1 @ iv - 9, 10 Groundwater that is or could be affected by DOE activities shall be monitored to determine and document the effects of operations on groundwater quality and quantity and to demonstrate compliance with DOE requirements and applicable Federal, State, and local laws and regulations.	As discussed in Subsection 4.4.1 of the OU1 *Remedial Design Work Plan*, the existing FEMP groundwater monitoring program will be used for assessing potential impacts to the groundwater due to planned OU1 remediation activities.	*Remedial Action Work Plan*
Waste Management	DOE Order 5820.2A @ 1 Radioactive Waste Management DOE 5820.2A III.3h Management of Low-Level Waste, Long-Term Storage Radioactive and mixed wastes shall be managed in a manner that assures protection of the health and safety of the public, DOE and contractor employees, and the environment. 5820.2A III.3h requires achieving performance objectives of DOE. 5820.2A III.3a requires records and documentation be kept for storage of low-level waste and permits the storage of waste until disposal by approved methods.	The treatment and storage of OU1 radioactive wastes, and the other pollutants or hazardous substances they contain, will be accomplished in a manner that complies with all applicable Federal, State and local environmental, safety, and health laws and regulations, and DOE requirements. The *Transportation and Disposal Plan* identifies specific requirements for disposal.	*Transportation and Disposal Plan* Sections 5 and 6

141

2038

Substantive Permit
Crosswalk

APPENDIX B

SUBSTANTIVE PERMIT CROSSWALK

Appendix B
Operable Unit 1 - Substantive Permit Crosswalk

B.1.0 INTRODUCTION

The Operable Unit 1 (OU1) Record of Decision (ROD) established thermal drying and the subsequent off-site disposal of OU1 wastes at a permitted commercial disposal facility (PCDF) as the selected remedy for the OU1 remedial action. The OU1 ROD also established Applicable and Relevant and Appropriate Requirements (ARARs) that must be followed to ensure that OU1 remedial activities are conducted in compliance with the substantive requirements of existing federal, state, and local environmental laws and regulations.

OU1 remedial activities are regulated under the Comprehensive Environmental Response, Compensation, and Liability Act (CERCLA), as amended by the Superfund Amendments and Reauthorization Act of 1986. Section 121(e) of CERCLA and the National Oil and Hazardous Substances Pollution Contingency Plan (NCP), 40 Code of Federal Regulations (CFR) Part 300 specifies that on-site remedial actions are exempt from the requirement to obtain formal permit approval, provided these actions are conducted in compliance with the substantive requirements of applicable and/or relevant and appropriate Federal, state and local environmental permits and regulations.

To comply with these CERCLA- and NCP-driven requirements, the United States Department of Energy (DOE) is required to provide the United States Environmental Protection Agency (US EPA) and the Ohio Environmental Protection Agency (Ohio EPA) with information demonstrating how remedial activities will comply with substantive permitting and ARAR-driven requirements associated with the selected remedy for each operable unit at the Fernald site. The DOE has committed to providing this information as part of the Remedial Design Work Plans currently being prepared for the various operable units. The DOE has further committed to providing this information in the form of Permitting and ARAR Crosswalk Tables, in which all substantive permit and ARAR-related requirements are identified along with a description of where in the design package the particular requirement is specifically addressed. A final demonstration of ARAR and substantive permitting compliance will be provided for each operable unit in their corresponding Remedial Action Work Plan submittals.

This appendix provides an overview of specific substantive permitting and ARAR-driven requirements associated with the OU1 remedial action. Tables B-1 through B-4 of this appendix provide a detailed listing of substantive permitting requirements associated with the OU1 remedial action and references the specific sections of the design submittals where additional information on the substantive requirements are addressed. Additional ARARs associated with the OU1 remedial action that are not related to the issuance of a specific permit and references to the sections of the design submittals where additional information on compliance with these requirements can be found are discussed in Appendix A.

B.2.0 SUBSTANTIVE PERMITTING REQUIREMENTS FOR AIR CONTAMINANT SOURCES

B.2.1 Applicability of Air Permit Program

The OU1 remedial action consists of the excavation and thermal drying of material contained in Waste Pits 1-6, the Clearwell, and Burn Pit. As a result of these activities numerous sources of fugitive and point source emissions of air contaminates will arise. These sources are subjected to compliance with the provisions of existing Federal and state air control laws.

B.2.2 Substantive Air Permitting Requirements Associated with the OU1 Selected Remedy

Under the federally enforced National Emission Standards for Hazardous Air Pollutants (NESHAP) Subpart H Standard promulgated in 40 CFR Part 61, Subpart H, radiological emissions from all sources at the site are limited to an annual effective dose equivalent of 10 mrem per year. Pursuant to the NESHAP Subpart H standard, emission estimates must be prepared for fugitive and point-source air emissions associated with the OU1 remedial action to demonstrate compliance with the 10 mrem/year standard. Each potential air emissions point source must be evaluated (by modeling) prior to placement to determine permitting and monitoring requirements. Specifically point sources with the potential for releases that could exceed a 0.1 mrem/year dose to any member of the general public on an uncontrolled basis must be continuously monitored. In addition, a notice of project completion for sources that exceed a 0.1 mrem/year dose to any member of the general public on a controlled basis is required.

In addition to the Federal requirements described above, the substantive permitting requirements of Ohio EPA's permit to install (Ohio Administrative Code [OAC] 3745-31) and permit to operate (OAC 3745-35) rules are applicable to air contaminant sources associated with the OU1 remedial action. The use of Best Available Technology (BAT) to control air emissions is included under these requirements.

B.2.3 Compliance Demonstration

Radiological sources associated with the OU1 remedial action will be evaluated against the substantive requirements of the NESHAP Subpart H Standard. Continuous monitoring and fugitive emission estimates will be used to measure off-site receptor doses. New sources of air contaminates or modifications to existing sources of air contaminants associated with the OU1 remedial action have been reviewed against the substantive provisions of the Ohio EPA's permit to install and permit to operate rules promulgated in OAC 3745-31 and OAC 3745-35. The need for specific pollution control equipment has been determined on a case-by-case basis such that it complies with the Ohio EPA's BAT requirements

167 [redacted]

for mitigating air contaminant emissions. Specific substantive permitting requirements for air contaminant sources associated with the OU1 remedial action are listed in Table B-1 of this Appendix.

B.3.0 SUBSTANTIVE PERMITTING REQUIREMENTS FOR WASTEWATER AND STORMWATER DISCHARGES

B.3.1 Applicability of NPDES Permit Program

Section 402 of the Clean Water Act (CWA) establishes the National Pollutant Discharge Elimination System (NPDES) permit program. The program is implemented in accordance with regulations promulgated in 40 CFR Part 122 through 136 which regulate the point source discharge of wastewater to waters of the United States through the issuance of NPDES permits. NPDES permits are designed to specify discharge limitations necessary to comply with applicable technology-based effluent standards and/or water quality-based standards. NPDES permits typically include monitoring requirements and additional conditions regulating point source discharges. Discharges of stormwater from specific types of activities have also been included under the NPDES permit program. Authority for administering the NPDES permit program within the State of Ohio has been delegated to the Ohio EPA.

B.3.2 NPDES Permitting Requirements

The DOE, the US EPA, and Ohio EPA have agreed that off-site discharges of process wastewater and stormwater generated during the course of the CERCLA remedial actions will be subject to compliance with both the substantive and administrative provisions of the Ohio EPA's NPDES permit program. OU1 discharges will be treated within the Fernald Environmental Management Project (FEMP) wastewater treatment system prior to discharge to the Great Miami River. Surge capacity and primary settling of OU1 wastewaters will be provided at the Biodenitrification Surge Lagoon. Final treatment of OU1 process wastewaters will be provided at the Advanced Wastewater Treatment facility (AWWT). Process wastewaters will be produced during initial de-watering of Waste Pits 5, 6 and the Clearwell, waste excavation and handling operations, and dryer operations. Stormwater runoff currently being collected in the waste pit area will also continue to be processed through the existing wastewater treatment system via the waste pit stormwater collection system.

A new industrial stormwater outfall to Paddy's Run Creek will also be established during implementation of the OU1 remedial action. Discharges from this outfall will be comprised of overflows from the new stormwater management basin that will be used to collect stormwater runoff for the waste processing area. Establishment of this outfall constitutes a new point source discharge of industrial stormwater, and as such is subject to the provisions of the Ohio EPA's NPDES permit program.

Current operating plans also call for processing standing water from Pits 5 and 6 through the Clearwell during the initial dewatering of these pits prior to excavation. Under the 1987 Director's Findings and Orders, use of the Clearwell in this manner was prohibited; however, the DOE has requested and approval has been received from the Ohio EPA by letter of March 1, 1996, to use the Clearwell for the proposed remediation activities.

Process wastewater and stormwater discharges associated with the OU1 remedial action will be treated at the AWWT to ensure compliance with the terms and conditions of the existing NPDES permit. By permit condition, the DOE is required to notify the Ohio EPA of any activities or changes at the site which have the potential to significantly alter the character of the wastewater streams being discharged under its existing NPDES permit. A NPDES permit modification is required if the discharge is deemed significant enough to cause a change in the character of the wastewater stream. The DOE has evaluated process wastewater discharges associated with the OU1 remedial action and has determined that they are of significant nature to warrant an NPDES permit modification. The existing FEMP NPDES permit will be updated through the normal modification and/or renewal processes to reflect process wastewater discharges associated with the OU1 remedial action. The existing NPDES permit will also be modified to reflect the addition of the new industrial stormwater outfall to Paddy's Run Creek. Construction related stormwater runoff will continue to be managed in accordance with the requirements of the existing FEMP NPDES permit and Stormwater Pollution Prevention Plan.

B.3.3 Compliance Demonstration

The DOE, US EPA, and Ohio EPA have agreed that off-site wastewater discharges associated with the AWWT, and any other point-source wastewater or stormwater discharges to the Great Miami River or Paddys Run Creek will continue to be permitted through the NPDES modification and renewal processes. In order to comply with the requirements of this agreement, the existing FEMP NPDES permit will be renewed and/or modified to reflect process wastewater and stormwater discharges associated with the OU1 remedial action. Table B-2 of this Appendix documents NPDES related permitting requirements associated with the OU1 remedial action.

B.4.0 SUBSTANTIVE RCRA PERMITTING REQUIREMENTS

B.4.1 Applicability of RCRA Permit Program

Subtitle C of Resource Conservation and Recovery Act (RCRA) requires all hazardous waste treatment, storage, or disposal facilities (TSDs) to obtain RCRA Part A and B permits. The Part A permit includes basic information about the TSD facility, such as its name, location, and types of activities performed at the facility. Part B permits require detailed information about the TSD facilities including the types of wastes to be handled, groundwater monitoring plans, and facility design information. These permit

requirements are established in 40 CFR Part 270 and reflect the requirements of 40 CFR Part 264. The administration of the RCRA permitting process has been delegated to the Ohio EPA in the State of Ohio. The general state implemented RCRA permit requirements are equivalent to the Federal RCRA permitting requirements promulgated in OAC 3745-50.

B.4.2 Substantive RCRA Permitting Requirements Associated with the OU1 Selected Remedy

The FEMP submitted a RCRA Part B Permit Application to the Ohio EPA in October 1991 in accordance with its stipulated amended Consent Decree with the Ohio EPA. Therefore, the substantive permitting requirements mandated under the RCRA Part B permit are applicable to remedial actions conducted at the site that involve the treatment, storage, and disposal of hazardous wastes.

Of the Clearwell, Burn Pit, and six waste pits located within the OU1 boundary, only Waste Pits 4 and 5 are currently listed as hazardous waste management units. However, analytical testing of material from these pits does not support the position that pit wastes are hazardous under existing RCRA regulations, nor does it indicate the presence of RCRA characteristic wastes throughout the remaining waste pits. Regardless, waste pit material must be characterized prior to shipment off-site.. In the event RCRA characteristic wastes are identified, they must be managed in accordance with RCRA ARARs.

In addition, the *Draft Director's Findings and Orders* between the Ohio EPA and the DOE specify that demonstration of compliance with the substantive closure and post-closure requirements for hazardous waste management units will be documented in the remedial design and remedial action deliverables. The manner in which the OU1 remedial action will achieve compliance with these requirements is documented in this DCD.

B.4.3 Compliance Demonstration

Excavation, size reduction, homogenization, blending, and drying of OU1 pit wastes will be conducted to produce a single wastestream that will subsequently be shipped off-site for disposal at a PCDF. Prior to shipment off-site, wastes will be analyzed to determine if they meet the PCDF's waste acceptance criteria. If, during waste acceptance criteria testing, RCRA characteristic wastes are identified, the waste will be packaged and shipped to a low-level disposal facility that is also capable of treating and disposing of these types of RCRA wastes. The off-site shipment of RCRA wastes will be conducted in accordance with Department of Transportation and RCRA requirements.

Substantive RCRA permitting requirements and hazardous waste management unit closure and post-closure requirements associated with the OU1 remedial action are addressed in Table B-3 of this

Appendix. Table B-3 also provides reference to the sections of the DCD where additional detail on this requirements can be found.

B.5.0 SUBSTANTIVE PERMITTING REQUIREMENTS ASSOCIATED WITH DISCHARGES OF DREDGED AND FILL MATERIAL INTO WETLANDS AND WATERS OF THE UNITED STATES

B.5.1 Applicability of Clean Water Act Section 404 and 401 Wetland Permit Programs

Pursuant to Section 404 of the CWA, any activity that results in the discharge of dredge or fill material into waters of the United States, including wetlands requires permit authorization by the United States Army Corps of Engineers (ACOE). The ACOE authorizes dredge and fill activities within wetlands and other waters of the United States through the issuance of permits under its Nationwide or Individual Permit Programs (33 CFR Parts 330 and 323, respectively). In instances where discharges of dredge and fill material are associated with CERCLA removal and remedial actions, the ACOE has delegated responsibility for ensuring discharges are conducted in accordance with Sections 404 and 401 of the CWA to the US EPA.

In addition to the federally enforceable permitting requirements mandated under Section 404 of the CWA, individual States are delegated responsibility for ensuring discharges of dredged or fill material conducted within their borders comply with the requirements of Section 401 of the CWA. In Ohio, the Section 401 State Water Quality Certification program is administered by the Ohio EPA pursuant to OAC 3745-32.

B.5.2 Substantive Permitting Requirements Associated with the OU1 Selected Remedy

Impacts to wetlands and waters of the United States were considered during selection of the OU1 selected remedy as documented in the OU1 ROD. Although the DOE has avoided and minimized wetland impacts to the maximum extent practicable during its remedial design efforts, approximately 4.96 acres of headwaters and isolated jurisdictional wetlands will be dredged and/or filled as a result of the OU1 remedial action. Because the OU1 remedial action will result in the dredging and filling of these jurisdictional wetlands, the substantive permitting requirements mandated under the implementing regulations of the CWA Section 404 and 401 permit programs are applicable to the OU1 remedial action.

Based upon review of ACOE Nationwide Permits promulgated in Appendix A to 33 CFR Part 330, the DOE has determined that impacts associated with the OU1 remedial action meet the substantive terms and conditions of Nationwide Permit 26 - *"Headwaters and Isolated Waters Discharges"* and therefore, would

171

have been authorized under this Nationwide Permit in absence of the CERCLA Section 121(e) exemption. The Ohio EPA granted its corresponding Section 401 State Water Quality Certification for Nationwide Permit 26 on January 17, 1992.

The specific terms and conditions of Nationwide Permit 26 that must be followed for discharges to be authorized under the Nationwide Permit are promulgated in Appendix A to 33 CFR Part 330. Of these, only those requirements which are deemed substantive in nature (i.e., non-administrative) are considered applicable to the OU1 remedial action. Substantive permitting requirements mandated under the Ohio EPA's corresponding Section 401 State Water Quality Certification are limited to restrictions on the acreage of dredge and fill activities and on discharges to special aquatic areas such as bogs and fens. The substantive permitting requirements of Nationwide Permit 26 and its corresponding Section 401 State Water Quality Certification that are applicable to the OU1 remedial action are presented in Table B-4.

B.5.3 Compliance Demonstration

The unavoidable 4.96 acre impact that will result from the OU1 remedial action will be conducted in accordance with the substantive requirements of Nationwide Permit 26 and its corresponding Section 401 State Water Quality Certification, including soil and erosion control and wetland mitigation. To avoid a piece-meal approach to mitigation, wetland impacts will be mitigated on a sitewide basis. Documentation addressing how specific mitigatory requirements will be addressed will be submitted pursuant to the schedule established in the Operable Unit 5 Remedial Design Work Plan. Additional information on the manner in which the OU1 remedial action will comply with substantive wetland permitting requirements has been incorporated in this DCD. Table B-4 relates these substantive permitting requirements to the specific sections of the DCD where compliance with the substantive permit requirements are addressed.

B.6.0 COMPLIANCE WITH NON-PERMIT RELATED ARARS

OU1 remedial actions must also comply with non-permit related ARARs established under existing Federal, state, and local environmental regulations. Tables describing the requirements of these ARARs and the manner in which the OU1 remedial action will comply with their requirements are included in Appendix A to this DCD.

173

Table B-1 - Substantive Permitting Requirements for Air Contaminant Sources

Citation	Substantive Permitting Requirements	Compliance Plan	Cross Reference Index
	Substantive Air Permits - Dryer		
Permits to Install New Sources of Emissions OAC 3745-31-05(A)	The director shall issue a permit to install if he determines that the installation or modification and operation of an air contaminant source will: • Not prevent or interfere with the attainment or maintenance of applicable ambient air quality standards; • Not result in a violation of any applicable air pollution control laws; and • Employ best available technology to control emissions.	Permits to Install would be required for the fueling station, rotary dryer, and gas furnace in absence of the CERCLA 121(e) permitting exemption. These sources will be installed such that they do not interfere with the attainment or maintenance of any applicable air quality standards or cause a violation of applicable air control laws. BAT will be employed to control both point source and fugitive emissions associated with the project. BAT for particulate radionuclide emissions shall be HEPA Filtration with differential pressure gauge and low differential pressure alarm to be installed on the dryer off-gas system.	*Process Description for the Remediation System Design Section 4.0 and 5.0*
Particulate Matter Standards OAC 3745-17-07	Visible particulate emissions from any stack may exceed twenty percent opacity, as a six minute average, for not more than six consecutive minutes in any sixty minutes, but shall not exceed sixty percent opacity, as a six minute average, at any time.	BAT shall mean that visible emissions of particulate shall not exceed 0 percent opacity from the discharge stack of any control device associated with this source excluding water vapor. Based on the design of the dryer, HEPA filtration and a spray tower shall be installed on the off-gas system to remove particulate.	*Waste Excavation Plan for the OU1 Remediation System Design Section 5.0 and Process Description for the Remediation System Design Section 4.0 and 5.0*

Table B-1 - Substantive Permitting Requirements for Air Contaminant Sources (Continued)

Citation	Substantive Permitting Requirements	Compliance Plan	Cross Reference Index
	Substantive Air Permits - Dryer		
National Emission Standards for Hazardous Air Pollutants (NESHAP) - 40 CFR Part 61, Subpart H - Emissions of Radionuclides Other Than Radon From DOE Facilities 40 CFR 61.90 and 40 CFR 61.96(b) and 40 CFR 61.92 (DOE 5400.5) and 40 CFR 61.93(b)	An application for approval does not have to be filed for radionuclide sources if the effective dose equivalent caused by all emissions from the new construction or modification is less than 0.1 mrem per year. Radiological emissions (except radon-222 and radon-220) to the ambient air from DOE facilities shall not exceed those amounts that would cause any member of the public to receive an effective dose equivalent of 10 mrem in any one year. Continuous emission monitoring is required for stacks and vents that have the potential, under normal operating conditions, but without emission control release radionuclides in sufficient quantities to cause any member of the general public to receive an effective dose equivalent of 0.1 mrem/year or greater.	HEPA filtration is BAT for radionuclide emissions and shall be installed to minimize radiological emissions to the ambient air and the contribution to the effective dose equivalent to any member of the public from the dryer stack. Continuous stack monitoring will be required on the exhaust stack based on modelling of radionuclide emissions to the site boundary. The monitoring system shall be operated continuously when radionuclide emissions are exhausted through the stack. The monitoring system shall have an isokinetic sampler designed and built in accordance with 40 CFR 61.93. The sampler shall include a radiation monitor with a high radiation alarm.	*Process Description for the Remediation System Design Section 4.0 and 5.0*
Radon Emissions 40 CFR 192, Subpart A	Radon emissions from the dryer or other point sources shall meet a stack limit based on a maximum allowable off-site impact of 0.5 pCi/l annual average for each point source. This limit is based on 40 CFR 192, Subpart A. although this limit is not directly applicable to point sources, applying to the impact from restored sites and not sites under remediation, it is being identified as a relevant and appropriate limit. To calculate the stack limit for a point source, US EPA-approved dispersion modeling shall be used.	Based on the current design of the dryer, modeling was completed on radon emissions from the dryer stack. The results indicate that radon emissions from the dryer will be well below the 0.5 pCi/l limit at the site boundary, therefore, no control equipment or administrative controls will be necessary to maintain compliance with environmental regulatory requirements. To verify that the stack limit will not be exceeded during the operation of the dryer, a continuous radon monitor shall be installed in the stack.	*Process Description for the Remediation System Design Section 4.0 and 5.0*
Ohio EPA Air Toxics Policy	The current PTI regulations provide the Director of the Ohio EPA with a mechanism to require the evaluation of toxic air contaminants from new sources. The Ohio EPA Air Toxics Policy provides a mechanism for calculating the Maximum Acceptable Ground-Level Concentration (MAGLC) for a toxic substance. This value at the site boundary will be modeled to the stack to determine a stack limit. All toxic compounds that will exceed the stack limit shall be controlled administratively or by BAT to lower emissions to below the calculated stack limit.	For toxic compound emissions that were calculated to exceed the established stack limit, administrative controls shall be implemented or emissions shall be controlled by implementing BAT for toxic emissions. BAT for toxic emissions shall be throughput/materials restrictions or carbon beds for organic, caustic scrubbers for acidic fumes, or condenser for organic and acidic fumes.	*Process Description for the Remediation System Design Section 4.0 and 5.0*

2038

Table B-1 - Substantive Permitting Requirements for Air Contaminant Sources (Continued)

Citation	Substantive Permitting Requirements	Compliance Plan	Cross Reference Index
	Substantive Air Permits - Dryer		
Air Emission Standards for Process Vents 40 CFR 264.1030- 264.1036	Reduced total organic emissions below 1.4 kg/h (3 lbs/hr) and 2.8 Mg/yr (3.1 tons/yr). Control device (condenser or absorber) must recover organic vapors with an efficiency of 95 percent or greater. No regulations have been promulgated for process vents associated with thermal drying, however, 40 CFR 264.1030- 1036 will be relevant and appropriate but not applicable to air emission standards for process vents associated with thermal drying.	To control organic emissions, BAT shall be implemented. BAT for organic emissions shall be either carbon beds or condensers or administrative controls.	*Process Description for the Remediation System Design Section 4.0 and 5.0*
Air Quality Standards 40 CFR 60.670 Subpart OOO	Stack emissions from affected facilities shall not: contain particulate matter in excess of 0.05 g/dscm; or exhibit greater than 7 percent opacity, unless the stack emissions are discharged from an affected facility using a wet scrubbing control device. These standards are relevant and appropriate since shredder and conveyor systems were specified.	Shredder and conveyor systems will be enclosed with dust suppression system to meet this requirement. Also, preliminary design includes a spray tower to remove particulate prior to discharge from the dryer. BAT for particulate radionuclides emissions shall be HEPA Filtration with differential pressure gauge and low differential pressure alarm to be installed on the dryer off-gas system.	*Process Description for the Remediation System Design Section 4.0 and 5.0*
Air Quality Standards OAC 3745-21-07(G)(2)	Emissions of photochemical reactive material from processes, including drying, not to exceed 40 lbs/day, with a peak of 8 lbs/hour.	BAT shall be implemented to control organic emissions. BAT for organic emissions shall be either administrative controls or installing carbon beds or a condenser.	*Process Description for the Remediation System Design Section 4.0 and 5.0*
Air Quality Standards OAC 3745-21-02(C) and OAC 3745-21-03(D)	This requirement covers ambient air quality standards, guidelines, and methods of ambient air quality measurements for non-methane hydrocarbons. Mean ambient concentration of non-methane hydrocarbons not to exceed 160 micrograms/cubic meters (0.24 ppm as carbon) between 6 and 9 a.m.; methods for determining ambient concentration of non-methane hydrocarbons.	During drying, hydrocarbon soil contaminants may be evolved with the steam. An uncontrolled release could lead to a violation of this standard. BAT shall be implemented to control non-methane hydrocarbon emissions. BAT to reduce non-methane hydrocarbon emissions shall be either administrative controls or installing carbon beds or a condenser. Compliance to this standard shall be demonstrated using US EPA-approved air modeling.	*Process Description for the Remediation System Design Section 4.0 and 5.0*
General Provisions on Air Pollution Control OAC 3745-15-07(A)	Emission of any substance into the air in such a manner or in such amounts as to endanger the health, safety or welfare of the public, or cause unreasonable injury or damage to property, is hereby found and declared a public nuisance. It shall be unlawful for any person to cause, permit, or maintain any such public nuisance.	Potential emissions from the dryer shall be evaluated during the design phase. Emissions shall be controlled using BAT either administratively or installing BAT control equipment.	*Process Description for the Remediation System Design Section 4.0 and 5.0*

Table B-1 - Substantive Permitting Requirements for Air Contaminant Sources (Continued)

Citation	Substantive Permitting Requirements	Compliance Plan	Cross Reference Index
Substantive Air Permits - Dryer			
Nitrogen Oxide Standards OAC 3745-23-06(B)	Except as otherwise provided in these regulations, all stationary nitrogen oxide emission sources shall minimize nitrogen oxide emission by use of the latest available control techniques and operating practices in accordance with best current technology.	To minimize nitrogen oxide emissions, the dryer shall be equipped with low NOx burners which is considered BAT for gas-fired burners.	*Process Description for the Remediation System Design Section 4.0 and 5.0*

2038

Table B-1 - Substantive Permitting Requirements for Air Contaminant Sources (Continued)

Citation	Substantive Permitting Requirements	Compliance Plan	Cross Reference Index
Excavated Working Materials - Materials Being Excavated, Transported, Stored, or Blended			
Permits to Install New Sources of Emissions OAC 3745-31-05(A)	The director shall issue a permit to install if he determines that the installation or modification and operation of an air contaminant source will: • Not prevent or interfere with the attainment or maintenance of applicable ambient air quality standards; • Not result in a violation of any applicable air pollution control laws; and • Employ best available technology to control emissions.	Permits to Install would be required for the fueling station, rotary dryer, and gas furnace in absence of the CERCLA 121(e) permitting exemption. These sources will be installed such that they do not interfere with the attainment or maintenance of any applicable air quality standards or cause a violation of applicable air control laws. BAT will be employed to control both point source and fugitive emissions associated with the project.	*Process Description for the Remediation System Design Section 4.0 and 5.0*

Table B-1 - Substantive Permitting Requirements for Air Contaminant Sources (Continued)

Citation	Substantive Permitting Requirements	Compliance Plan	Cross Reference Index
Excavated Working Materials - Materials Being Excavated, Transported, Stored, or Blended			
Particulate Matter Standards OAC 3745-17-07(B) and OAC 3745-17-8 (B)	Visible particulate emissions from any fugitive dust source shall not exceed twenty percent opacity as a three-minute average except: a) There shall be no visible particulate emissions from any paved roadway or parking area except for a period of time not to exceed six minutes during any sixty-minute observation period. b) There shall be no visible particulate emissions from any unpaved roadway or parking area except for a period of time not to exceed thirteen minutes during any sixty-minute observation period. c) There shall be no visible particulate emissions from any material storage piles except for a period of time not to exceed thirteen minutes during any sixty-minute observation period.	No person shall cause or permit any fugitive dust source to be operated; or any materials to be handled, transported, or stored; or a building or its appurtenances or a road to be used, without taking or installing reasonably available control measures to prevent fugitive dust from becoming airborne. Such reasonably available control measures shall include, but not limited to, one or more of the following which are appropriate to minimize or eliminate visible particulate emissions of fugitive dust: 1) The use of water or other suitable dust suppression chemicals for the control of fugitive dust from demolition of existing buildings or structures, constructions operations, the grading of roads or clearing land; 2) The periodic application of asphalt, water, or other suitable dust suppression chemicals on dirt or gravel roads and parking lots, and other surfaces which can cause emissions of fugitive dust; suitable coverings; 3) The periodic application of water or other suitable dust suppression chemicals, the installation of storage silos, bins, or other enclosed structures, or the use of canvas or other suitable coverings, for all materials stockpiles and stockpiling operations; 4) The covering, at all times, of open bodied vehicles when transporting materials likely to become airborne; 5) The paving of roadways and the maintaining of roadways in a clean condition. Fugitive sources can also be controlled through work practices such as minimize handling, disturbances, or time exposed of the residues. For contingency materials that will be stored for an extended period of time, more stringent BAT controls shall be implemented such as applying tarps or building a ventilated temporary structure with BAT controls such as HEPA filtration. For contingency materials that will be stored for an extended period of time, more stringent BAT controls shall be implemented such as applying tarps or building a ventilated temporary structure with BAT controls such as HEPA filtration.	*Process Description for the Remediation System Design Section 4.0 and 5.0 and the Waste Excavation Plan for the OU1 Remediation System Design Section 5.0*

178

2038

Table B-1 - Substantive Permitting Requirements for Air Contaminant Sources (Continued)

Citation	Substantive Permitting Requirements	Compliance Plan	Cross Reference Index
Excavated Working Materials - Materials Being Excavated, Transported, Stored, or Blended			
Radon Emissions	Radon emissions from excavated working materials are intermittent fugitive sources and will be controlled by implementing BAT with no numerical emission rate limit.	BAT control for radon emissions from excavated working materials can be, but not limited to, applying water or a dust suppressant over the residues, or work practices to minimize handling, disturbances or time exposed. For contingency storage piles that will be stored for an extended period of time, more stringent BAT controls shall be implemented such as applying tarps or building a ventilated temporary structure with controls such as carbon beds.	*Process Description for the Remediation System Design Section 4.0 and 5.0 and the Waste Excavation Plan for the OU1 Remediation System Design Section 5.0*
General Provisions on Air Pollution Control OAC 3745-15-07 (A)	Emission of any substance into the air in such a manner or in such amounts as to endanger the health, safety or welfare of the public, or cause unreasonable injury or damage to property, is hereby found and declared a public nuisance. It shall be unlawful for any person to cause, permit, or maintain any such public nuisance.	Fugitive emissions shall be controlled using BAT. See OAC 3745-17-07(B) and OAC 3745-17-8 (B).	*Process Description for the Remediation System Design Section 4.0 and 5.0*

Table B-1 - Substantive Permitting Requirements for Air Contaminant Sources (Continued)

Citation	Substantive Permitting Requirements	Compliance Plan	Cross Reference Index
	Waste Pits		
National Emission Standards for Air Pollutants (NESHAP) -40 CFR 61, Subpart Q - Emissions of Radon From Department of Energy Facilities	No source at a DOE facility shall emit more than 20 pCi/m^2/sec of radon-222 as an average for the entire source, into the air. Source means any building, structure, pile, impoundment or area used for interim storage or disposal that is or contains waste material containing radium in sufficient concentration to emit radon-222 in excess of this standard prior to remedial action.	The radon flux rate from the unexcavated parts of Waste Pits 1, 2, 3, and 4 have already been measured by FERMCO and Chem-Nuclear Geotech, Inc. in 1992 per 40 CFR 61 Appendix B, Method 115 and were below this standard. No radon flux measurements were required for the Clearwell and Waste Pit 5 since these areas are covered with water. These areas need to remain covered with water, otherwise, radon flux measurements of these areas will be required per Method 115. No radon flux measurements were necessary from Waste Pit 6 and the Burn Pit because these storage pits do not contain a sufficient quantity of radium-226.	*Process Description for the Remediation System Design Section 4.0 and 5.0*

160

2038

Table B-2 - NPDES Permitting Requirements

Citation	Substantive Permitting Requirements	Compliance Plan	Cross Reference Index
Ohio EPA Permit No. 1IO00004*ED			
Ohio EPA NPDES Permit No. 1IO0004*ED	Wastewater discharges associate with the OU1 remedial action must be treated to ensure compliance with the terms and conditions of the FEMP NPDES permit. The DOE is required to notify the Ohio EPA of any activities or changes at the site which have the potential to significantly alter the character of the wastewater streams being discharged under its existing NPDES permit. A NPDES permit modification is required if the discharge is deemed significant enough to cause a change in the character of the wastewater stream. The existing NPDES permit must also be modified to reflect the addition on any new point source discharges of process wastewaters or stormwaters. Construction related stormwater runoff must be managed in accordance with the requirements of the existing FEMP NPDES permit and Stormwater Pollution Prevention Plan.	Wastewater discharges associated with the OU1 remedial action will be treated to ensure compliance with NPDES permit requirements. The existing NPDES permit will be modified and/or renewed to reflect process wastewater discharges and to incorporate the addition of the new industrial stormwater outfall to Paddy's Run Creek. Construction related stormwater runoff will continue to be managed in accordance with the requirements of the existing FEMP NPDES permit and Stormwater Pollution Prevention Plan.	*Process Description for the Remediation System Design Section 7.0* *DCD Section 2.3.5.3 and Waste Excavation Plan For the OU1 Remediation System Design Section 5.0*

Table B-3 - RCRA Substantive Permitting Requirements

Citation	Substantive Permitting Requirements	Compliance Plan	Cross Reference Index
RCRA Substantive Permitting Requirements			
Hazardous Waste Determinations 40 CFR 262.11 (OAC 3745-52-11)	Generators of wastes must determine whether or not these wastes are hazardous in accordance with the requirements of this rule.	Excavation, size reduction, homogenization, blending, and drying of pit wastes will result in the production of a single waste stream that will subsequently be shipped off-site by railcar for disposal at a PCDF. Representative samples from each railcar will be sampled to ensure they meet disposal facility waste acceptance criteria. As documented in the OU1 FS/PP and ROD, this waste stream does not contain RCRA listed wastes and therefore, samples will be analyzed for RCRA characteristics only in accordance with the requirements of 40 CFR 262.11 and OAC 3745-52-11. If analytical results indicate the waste exhibits RCRA hazardous characteristics, the railcar will be shipped to a PCDF for treatment and disposal as hazardous waste.	*Sampling and Analysis Plan to be developed as a part of the Remedial Action Work Plan.*

Table B-3 - RCRA Substantive Permitting Requirements (Continued)

Citation	Substantive Permitting Requirements	Compliance Plan	Cross Reference Index
RCRA Substantive Permitting Requirements			
Preparing and Transporting Hazardous Waste Off-site. 40 CFR 262.20 through 262.33 and 40 CFR 263.20 (OAC 3745-52-20 through 33 and OAC 3745-52-40 and OAC 3745-52-42)	Any generator who transports hazardous waste for off-site treatment, storage, or disposal must originate and follow-up the manifest for off-site shipments. Pre-transporting requirements include appropriate packaging, labeling, marking, and placarding.	If analytical results indicate the waste exhibits RCRA hazardous characteristics, the railcar will be shipped to a PCDF for treatment and disposal as hazardous waste in accordance with the provisions of these regulations.	*Sampling and Analysis Plan to be developed as a part of the Remedial Action Work Plan.*
Closure 40 CFR 264, Subpart G (OAC 3745-55-11 through 16)	Owner and/or operators must close facilities in a manner that: • Minimizes the need for further maintenance • Minimizes post-closure escape of hazardous constituents • Complies with specific unit type closure requirements	Hazardous waste management units located within the OU1 boundary will be closed in accordance with the substantive provisions of these requirements during the OU1 remedial process. As documented in the Draft Director's Final Findings and Orders between the DOE and the Ohio EPA, demonstration of compliance with substantive closure and post-closure requirements for hazardous waste management units are documented in this DCD.	*Waste Excavation Plan for the OU1 Remediation System Design*

Table B-3 - RCRA Substantive Permitting Requirements (Continued)

Citation	Substantive Permitting Requirements	Compliance Plan	Cross Reference Index
	RCRA Substantive Permitting Requirements		
Post-Closure 40 CFR 264 Subpart G 40 CFR 264.117 and 40 CFR 264.119 (OAC 3745-55-17 and OAC 3745-55-19)	Post-closure care and use of property for a period as necessary to protect human health and the environment including: • Access controls • Monitoring Post-closure notices must include deed notation/use restriction.	Post-closure care will be provided in accordance with the substantive provisions of these requirements during the OU1 remedial process. As documented in the Draft Director's Final Findings and Orders between the DOE and the Ohio EPA, demonstration of compliance with substantive closure and post-closure requirements for hazardous waste management units are documented in this DCD.	*Waste Excavation Plan for the OU1 Remediation System Design*
Waste Piles OAC 3745-56-51, 54, and 58	These requirements specify design and operating requirements, monitoring, and inspection, closure and post-closure care. Specific substantive requirements include: • Run-on/run-off control systems must be designed and installed to prevent flow onto or runoff from the active pile during peak flows from a 25-year, 24-hour storm event. • Collection and hold facilities associated with run-on/run-off control systems must be emptied after storms. • Piles must be covered or otherwise managed to prevent wind dispersion. • Waste piles must be inspected weekly and after storms to ensure the integrity of run-on and run-off controls. • At closure, owners must remove or decontaminate all waste residues, contaminated system components, contaminated subsoils and structures, and equipment contaminated with waste and leachate and manage as hazardous waste.	Waste piles generated during the course of the project will be managed in accordance with the substantive provisions of these requirements. Under the design build and operate concept feedstock piles associated with the process facility would be contained under roof and would be located on a concrete surface with run-on/run-off collection control. Feedstock and contingency piles would be managed to control wind dispersal. Upon completion of remedial activities, the processing facility would be remediated to remove all processing facilities and residual contamination consistent with established remedial levels. The ARASA contractor will be required to meet the substantive provisions of the requirements.	*Waste Excavation Plan for the OU1 Remediation System Design, Process Description Sections 2.0 and 3.0, and General Arrangement Drawings*

184

2038

Table B-4 - CWA Section 404 and 401 Substantive Wetland Permitting Requirements

Citation	Substantive Permitting Requirements	Compliance Demonstration	Cross Reference Index
Nationwide Permit 26 - Substantive Permitting Requirements			
Nationwide Permits 33 CFR Part 330, Appendix A	Discharges of dredged and fill material associated with the OU1 remedial action shall not exceed 10 acres or more acres of total disturbance.	Discharges of dredged or fill material associated with the OU1 remedial action total approximately 4.96 acres.	*DCD Section 2.3.5.3 and Waste Excavation Plan for the OU1 Remediation System Design Section 5.0*
	No activity may cause more than a minimal adverse effect on navigation.	Discharges will be conducted within isolated and headwater wetlands and therefore, will have no adverse impacts on navigation.	*DCD Section 2.3.5.3 and Waste Excavation Plan for the OU1 Remediation System Design Section 5.0*
	Any structure or fill authorized shall be properly maintained, including maintenance to ensure public safety.	Fill material will be maintained and stabilized upon completion of remedial activities. Public access to the OU1 area of the site is restricted to site personnel, via the existing site security system.	*DCD Section 2.3.5.3 and Waste Excavation Plan for the OU1 Remediation System Design Section 5.0*
	Appropriate erosion control and siltation controls must be used and maintained in effective operating condition during construction, and all exposed soil or other fills must be permanently stabilized at the earliest practicable date.	Appropriate erosion control and siltation devices will be installed and maintained to minimize solids loadings to wetlands and Paddys Run. Erosion and siltation control devices will be design in accordance with the applicable requirements of USDA's Water Management and Sedimentation Control Manual for Urbanizing Areas and the provisions of the current FEMP Stormwater Pollution Prevention Plan.	*DCD Section 2.3.5.3 and Waste Excavation Plan for the OU1 Remediation System Design Section 5.0*

Table B-4 - CWA SECTION 404 and 401 Substantive Wetland Permitting Requirements (Continued)

Citation	Substantive Permitting Requirements	Compliance Demonstration	Cross Reference Index
Nationwide Permit 26 - Substantive Permitting Requirements			
Nationwide Permits 33 CFR Part 330, Appendix A	No activity may substantially disrupt the movement of those species of aquatic life indigenous to the water body, including those species which normally migrate through the area, unless the activity's primary purpose is to impound water.	Discharges of dredge and fill material will be conducted with headwater and isolated wetland systems and therefore, will not substantially disrupt the movement of any indigenous aquatic species.	*DCD Section 2.3.5.3 and Waste Excavation Plan for the OU1 Remediation System Design Section 5.0*
	Heavy equipment working in wetlands must be placed on mats or other measures must be taken to minimize soil disturbance.	Appropriate measures will be taken to ensure impacts from heavy equipment operating in wetlands will be avoided or minimized to the maximum extent practicable.	*DCD Section 2.3.5.3 and Waste Excavation Plan for the OU1 Remediation System Design Section 5.0*
	No activity is authorized under any Nationwide Permit which is likely to jeopardize the continued existence of a threatened or endangered species or a species proposed for such designation, as identified in the Federal Endangered Species Act, or which is likely to destroy or adversely modify the critical habitat of such species.	No known federally listed or proposed threatened or endangered species will be impacted by dredge and fill activities conducted in support of the OU1 remedial action.	*DCD Section 2.3.5.3 and Waste Excavation Plan for the OU1 Remediation System Design Section 5.0*
	No activity which may adversely affect historic properties listed, or eligible for listing, in the National Register of Historic properties is authorized.	No known listed or potential eligible historic properties will be impacted by the OU1 remedial action.	*DCD Section 2.3.5.3 and Waste Excavation Plan for the OU1 Remediation System Design Section 5.0*

186

2038

Table B-4 - CWA SECTION 404 and 401 Substantive Wetland Permitting Requirements (Continued)

Citation	Substantive Permitting Requirements	Compliance Demonstration	Cross Reference Index
Nationwide Permit 26 - Substantive Permitting Requirements			
Nationwide Permits 33 CFR Part 330, Appendix A	A wetland delineation is required to define the areal extent of impacts to wetland areas. Wetland delineations must be prepared in accordance with the current method required by the ACOE.	A sitewide jurisdictional wetland delineation was conducted using the ACOE 1987 Wetland Delineation manual and was subsequently approved by the ACOE in 1993. This delineation has served as the basis for defining wetland impacts associated with remedial activities at the FEMP site.	*DCD Section 2.3.5.3 and Waste Excavation Plan for the OU1 Remediation System Design Section 5.0*
	No discharge of dredged or fill material may occur in the proximity of a public water supply intake except where the discharge is for repair of the public water supply intake structures or adjacent bank stabilization.	No known public water supply intake structures existing within a 1000 foot radius of proposed OU1 discharges.	*DCD Section 2.3.5.3 and Waste Excavation Plan for the OU1 Remediation System Design Section 5.0*
	No discharge of dredged or fill material may consist of unsuitable material (e.g., trash, debris, car bodies, etc.) and material discharged must be free from toxic pollutants in toxic amount (see section 307 of the CWA).	Fill material associated with OU1 fill activities will consist of suitable material. Clean backfill will be used during stabilization of the OU1 area upon completion of remedial activities.	*DCD Section 2.3.5.3 and Waste Excavation Plan for the OU1 Remediation System Design Section 5.0*

Table B-4 - CWA SECTION 404 and 401 Substantive Wetland Permitting Requirements (Continued)

Citation	Substantive Permitting Requirements	Compliance Demonstration	Cross Reference Index
Nationwide Permit 26 - Substantive Permitting Requirements			
Nationwide Permits 33 CFR Part 330, Appendix A	Discharges of dredged or fill material into waters of the United States must be minimized or avoided to the maximum extent practicable at the project site. A compensatory mitigation plan defining the manner in which adverse impacts will be compensated for may be required.	Although the DOE has avoided and minimized impacts to wetlands and waters of the United State through the remedial design process, approximately 4.96 acres of unavoidable adverse wetland impacts will be associated with the Operable Unit remedial action. Impacts to these areas will be mitigated at a 1 to 1.5 acre ration in accordance with the Sitewide Wetland Mitigation Plan currently being prepared under the Operable Unit 5 Remedial Design process. In addition, the DOE has evaluated the proposed excavation of fill material from the area directly north of Waste Pit 5 and has determined that limiting the maximum depth of the proposed excavation to an elevation of 575 feet (MSL) should preclude direct contact with the water table in the immediate vicinity of the proposed borrow pit, thereby effectively minimizing potential adverse hydrologic impacts to the 26-acre wetland.	*DCD Section 2.3.5.3 and Waste Excavation Plan for the OU1 Remediation System Design Section 5.0*
	To the maximum extent practicable, discharges must not permanently restrict or impede the passage of normal or expected high flows or cause the relocation of waters unless the primary purpose of the fill is to impound waters.	Discharges associated with the OU1 remedial action will not adversely affect normal or anticipated high flows within those drainage basins which are contained within the OU1 boundary.	*DCD Section 2.3.5.3 and Waste Excavation Plan for the OU1 Remediation System Design Section 5.0*
	If the discharge creates an impoundment of water, adverse impact on the aquatic system caused by the accelerated passage of water and/or the restriction of its flow shall be minimized to the maximum extent practicable.	Discharges of dredged or fill material associated with the OU1 remedial action will not result in the impoundment of water within wetland areas located within the OU1 boundary.	*DCD Section 2.3.5.3 and Waste Excavation Plan for the OU1 Remediation System Design Section 5.0*

Table B-4 - CWA SECTION 404 and 401 Substantive Wetland Permitting Requirements (Continued)

Citation	Substantive Permitting Requirements	Compliance Demonstration	Cross Reference Index
Nationwide Permit 26 - Substantive Permitting Requirements			
Nationwide Permits 33 CFR Part 330, Appendix A	Discharges into breeding areas for migratory waterfowl must be avoided to the maximum extent practicable.	Proposed discharges of dredge and fill material will not occur with migratory waterfowl breeding areas.	*DCD Section 2.3.5.3 and Waste Excavation Plan for the OU1 Remediation System Design Section 5.0*
	Any temporary fills must be removed in their entirety and the affected areas returned to their preexisting elevation.	Temporary fills will be removed upon completion of remedial activities and the OU1 will be stabilized in accordance with the requirements of the grading plan prepared as part of this design package.	*DCD Section 2.3.5.3 and Waste Excavation Plan for the OU1 Remediation System Design Section 5.0*
Section 401 State Water Quality Certification - Substantive Permitting Requirements			
Section 401 Water Quality Certifications OAC 3745-32	Discharges of dredged or fill material are limited to a total disturbance of 5 acres or less.	While Nationwide Permit 26 allows for a maximum disturbance of 10 acres, the Ohio EPA has restricted the total allowable acreage authorized under the Nationwide Permit to 5 acres under its corresponding Section 401 State Water Quality Certification. The OU1 remedial action will result in a total impact of 4.67 acres and therefore, this impact is in compliance with this substantive requirement.	*DCD Section 2.3.5.3 and Waste Excavation Plan for the OU1 Remediation System Design Section 5.0*
	Discharges of dredged or fill material are precluded from occurring in special aquatic sites such as bogs and fens.	The wetland systems located within the OU1 boundary do not meet the technical definition of bogs or fens as established in the 401 State Water Quality Certification.	*DCD Section 2.3.5.3 and Waste Excavation Plan for the OU1 Remediation System Design Section 5.0*

2038

Results of Studies
/Tests

2038

APPENDIX C

RESULTS OF THE STUDIES/TESTS RELEVANT TO REMEDIATION SYSTEM DESIGN

Appendix C
Results of the Studies/Tests Relevant to Remediation System Design

A significant number of studies and tests have been completed that provided information for remedial design purposes. A summary of the scope of the study or testing work and the results are presented below. Additional detail is available in the referenced material.

C.1 Waste Excavation Plan

This study has evaluated and planned a top and bottom-based excavation approach. The plan considers various contingency actions to respond to unexpected conditions and reviews alternative measures that will lead to overall optimization of the top and bottom operations. A contingency operation for hydraulic excavation of the waste is also included.

For backup, and to minimize possible later delay, an alternative excavation approach, based on a berm-located dragline, has also been studied. This fallback alternative approach could be chosen if waste excavation became too difficult with the preferred top and bottom-based excavation approach.

C.2 Evaluation of Existing Equipment

This continuing evaluation is also under way as a separate task. Review has indicated that some potentially useable equipment is available from the FEMP surplus equipment inventory. The equipment list for the remedial facilities is currently being reviewed to designate what specific, surplus equipment may be available. Following that determination, field reviews will be conducted to further confirm suitable equipment. This continuing evaluation will lead to a final list of existing equipment designated for use in the OU1 remedial facilities.

C.3 Surrogate Waste Drying Testing

The surrogate waste drying tests *Report on Execution of Surrogate Waste Drying Tests* (PARSONS 1994), presents drying test information that has been the basis of the design of the indirect rotary dryer. That testing was completed with a variety of surrogate blends selected to duplicate the geotechnical properties of the pit wastes. These geotechnical properties are primarily related to particle size and moisture retention capacity as indicated by Atterberg Limits.

Drying rates, dryer operating conditions, heat transfer conditions, retention times, feed conditions, and a variety of other data were collected during the testing. Evaluation of this data has led to the recommended dryer type and the dryer-related information presented in the OU1 remedial facilities

design. Additional information is included in the document *Selection of an Indirect Rotary Dryer* (PARSONS 1995a).

C.4 DEEP Test Results

This program was a phased field and laboratory investigation focusing on the waste geotechnical properties. It provided basic information on water and solids content of the waste and provided information to determine preferred waste excavation methods and whether in situ waste dewatering is practical. DEEP includes pre-dewatering tests, dewatering testing, excavation tests, and waste pumping tests.

Pre-dewatering tests included 23 CPT probes and 9 field borings and sampling in Pits 1, 2, and 3. Both undisturbed and disturbed samples were collected. Laboratory testing of the samples was completed to determine basic geotechnical index and physical properties.

Additional confirmatory borings (five total), sampling, and laboratory testing work was also completed in Pits 1, 2, and 3 to provide increased confidence in final data.

Sampling was also completed in Pit 5 (14 locations) and Pit 6 (six locations) to obtain waste samples and data through the entire depth of the pit waste. Testing of these samples for basic geotechnical and physical properties was also completed. Because of the required sampling method, truly undisturbed samples could not be collected from these pits; however, the testing and data developed significantly improved previous available data.

Pre-dewatering test excavations were completed at a total of seven locations in Pits 1, 2, and 3. At these locations a backhoe dug a trench 10 - 15 feet deep in the waste to determine waste digging and handling characteristics.

Dewatering testing has been completed in Pits 1 and 3 to test different well designs and the practicality of in situ dewatering.

Excavation tests have been completed in Pits 1 and 3 by excavating ramps into the waste and operating equipment on the ramps. The *Technical Summary of DEEP Test Data* summarizes all the DEEP test activities and results and includes all the boring logs and laboratory testing data and results. The information from this report has established revised waste density and moisture content information that will provide final revisions to mass and energy balances for the waste processing. Also, waste strength data in conjunction with the test excavations into the waste provided information to finalize excavation plans.

C.5 Thickening/Settling Test Results

Tests on representative wastes were performed to determine thickening and settling properties of the pit wastes. This testing, in conjunction with the vacuum and pressure filtration tests that follow was used in investigating potential water removal processing steps for wastes that may be excavated hydraulically. Overall, the objective of the testing was to determine whether there were mechanical processing steps that could efficiently remove or reduce the water in the wastes and reduce thermal drying requirements. All testing information (thickening/settling and filtration) will be presented in a report (now being prepared).

The thickening and settling test data did not justify including thickening/settling equipment in the remedial facilities design. In situ waste densities are equal to or greater then what could be achieved with thickening/settling. These results indicated that if wastes have to be excavated hydraulically, it will be done without the addition of diluting slurry water.

C.6 Vacuum Filtration Test Results

Vacuum and pressure filtration tests were performed on representative wastes to determine the effectiveness and potential for use of a filtration step in the waste processing operations. This testing indicated a worthwhile increment of moisture removal was possible with a filtration step. The pressure filtration was actually more effective than the vacuum filtration but was not judged as practical because of the heterogeneity of the pit wastes. However, after testing was completed, the decision was made to not use vacuum filtration.

C.7 Solids Flow Testing

Flow properties testing on surrogate wastes was performed to determine bin design parameters for storage of the dried waste product (Jenike & Johanson, Inc., 1994). Minimum bin outlet dimensions and wall angles, and maximum practical moisture contents in the dried surrogates were determined in the testing.

C.8 Waste Densification Testing

A preliminary test has been performed to determine whether densification of the waste product is a cost-effective processing step. Burial costs will be based on weight, so increases in density and reductions in volume do not directly reduce waste burial costs. However, preliminary indications are that densification is possible and that it may offer other benefits; therefore, additional study and testing may be warranted.

C.9 Shredder Test Results

A debris shredding test was conducted at Komar Industries, Inc. in April 1994. Overall results and conclusions were mixed. There was satisfactory volume reduction but substantial material was not reduced to less than 4 inches in size. Results from this test were used to develop the material size limitations in the DCD. Additional detail is included in the *Shredding Engineering Tests Report* (PARSONS 1994).

C.10 Value Engineering Study

In January 1996, a value engineering study was initiated to attempt to reduce the overall size of the remediation facilities and reduce construction costs accordingly. In addition, other cost related aspects of the remedial facilities were also evaluated with the objective of adding value and/or reducing cost. The areas studied and the results of the studies are summarized below and the resultant changes are reflected in the revised general arrangement drawings:

1) Reduce the remedial facility size, including the waste preparation area and blending and loadout area, including the facility floor area, roof area, and roof overhangs.

   As a result of the value engineering the floor area has been reduced approximately 50 percent from the October 1995 size. There is a very limited amount of unroofed floor area and roof overhang in only two areas.

2) Reduce waste processing storage piles including the contingency, raw waste, dryer feed, and loadout piles.

   Through the value engineering effort all pile physical sizes have been reduced by approximately 1/3 to 1/2. Although reduced in size, there has also been a reduction in the maximum loadout rate of the waste product, so the reduction of the pile size in terms processing time is less.

3) Review alternative structural systems including tension support structures, pre-engineered buildings, and engineered buildings. As necessary, but not to hinder operations, space interior columns as closely as 50 feet.

   An engineered structure using prefabricated truss roof joists was determined to be the most cost efficient structural system. The flexibility in locating columns to not interfere with material handling operations was the primary factor.

4) Minimize overall roof height. Review raised bays or penthouses to accommodate higher equipment depending on type of structure.

The typical height to the bottom of the roof trusses is based on clearances for the mobile equipment operating in all areas of the remedial facilities. Raised bays or penthouses are used in only limited areas where fixed equipment height requires additional clearance. The engineered structural system can readily accommodate these features.

5) Depending on the need for facility walls, either from forthcoming safety analysis, or for operations improvement, consider them in conjunction with the type of structure.

Safety analysis has determined walls are not required for safety reasons. However, for operations there are some full height walls to isolate areas within the blending and loadout facility. Also waste pile rain shield walls and pile containment partitions are included as necessary. Aside from those walls the majority of the remedial facility is open sided.

6) Reduce floor slab thickness. Also, reconsider all parts of the floor system, including the underlying seepage containment, the slab, and a top seal.

Floor slab final design will size reinforcing steel and establish slab thickness. Also remaining floor system components, including the surface seal system, and the underlying seepage containment system will be finalized. At this time a reinforced 10" deep slab is expected to be adequate for the expected equipment loads and traffic.

7) Consider need for wintertime heating in some of the operating areas to minimize waste freezing.

At this time no provision is included for wintertime heating in the waste preparation and blending and loadout areas. The conditions and lengths of time when freezing could hinder operations are not expected to be severe enough to warrant heating systems. However, if limited space heating is later deemed necessary, it could be added, and systems for recovery and reuse of waste heat would be considered.

C.11 Other Possible Testing

Additional testing may be justified in a few other areas, including the following:

1) Raw waste handling/screening/transfer tests - Such tests could reduce the degree of conservatism in the conceptual design, such as for conveyor belt incline angles.

2) Consolidation tests of Pit 5 wastes - The extremely high moisture content of the Pit 5 wastes raises the question of whether a more cost-effective method of removing the waste entrained water than through thermal drying.

3) High-solids-content waste pumping - Previous attempts at water jetting and slurry pumping have not been effective for excavating wastes. In addition, if diluting water is added, it must later be removed from the wastes. DEEP data indicate there are substantial quantities of liquid-like wastes in Pits 5 and 3. If those materials do not drain or dewater, then pumping, at the existing solids content (without water addition), may be the most cost-effective excavation method.

4) Waste material handling evaluation - A subcontractor may be procured to test the loading of surrogate waste into a lined gondola car. This effort would aid in the development of: (1) specifications for the railcar liners and covers, (2) standard operating procedures for loadout; and (3) refined estimate of as-loaded bulk density.

2038

Stack Limits

APPENDIX D

DRYER OFF-GAS STACK LIMITS

APPENDIX D
Dryer Off-Gas Stack Limits

ASSUMPTIONS FOR MODEL

Assumptions	
Stack Height	60 feet
Stack Diameter	6 inches
Flow Rate	850 acfm
Exit Velocity	4,500 fpm
Ambient Temperature	67.7 degrees F
Stack Exit Temperature	95 degrees F

METSIM Data (PARSONS ID# 01:145:140:-287-95) is the best current estimate of the concentration of contaminants in the off-gas

Best Available Technology (BAT) - Low NO_x Burner fired with natural gas.

DRYER PRODUCT OFF-GAS LIMITS

Particulates: HEPA with a designed control efficiency of 99.97 percent at 3 microns.

Off-Gas Limits for Acid Gas	
Acid Gas	Limit (tons/year)
Hydrogen Fluoride	6.22
Hydrogen Chloride	17.95
Nitric Acid	12.45
Sulfuric Acid	2.39
Ammonia:	40.69
Nitrogen Dioxide	13.40
Sulfur Dioxide	12.45
Carbon Dioxide	21,542.00

Radon: 2×10^8 pCi/second or 6,307 Ci/year.

Off-Gas Limits for Organic Emissions	
Organic Compound	Limit (tons/year)
1,1,1-Trichloroethane	4,574.19
1,1,2,2-Tetrachloroethane	16.76
1,1-Dichloroethane	970.13
1,1-Dichloroethene	48.59
1,2-Dichloroethane	95.67
1,2-Dichloroethylene	1893.38
1,4-Dioxane	216.14
2,4-Dinitrotoluene	0.36
2,6-Dinitrotoluene	0.36
2-Butanone	1,412.47
2-Hexanone	47.92
2-Methylnaphthalene	86.12
Acetone	4,255.84
Benzene	76.57
Carbon Disulfide	74.06
Carbon Tetrachloride	74.06
Chlorobenzene	110.08
Chloroform	117.29
Dichlorodifluoromethane	100.53
Diethyl Phthalate	11.96
Ethylbenzene	10,388.27
Hexachloroethane	23.29
Isobutyl Alcohol	363.59
Isophorone	67.02
Methylene Chloride	417.21
Naphthalene	124.49
Pentachlorophenol	1.20
Phenol	45.41
Styrene	509.36
Tetrachloroethene	810.96
Toluene	450.72
Total Xylene	1,038.827
Tributyl Phosphate	5.26
Trans-1,2-Dichloroethene	1,893.35
Trichloroethene	643.40
Trichlorofluoromethane	13,404.22
Vinyl Chloride	31.16

2038

PLANT FACILITIES ENGINEERING

2038

2038

Process Description for the Remediation System Design

Operable Unit 1
Project Order 145

March 1996
Revision F

Environmental Remedial Action Project
Fernald Environmental Management Project
Fernald, Ohio
FERMCO Subcontract No. 2-21487

PARSONS

25 Merchant Street
Cincinnati, Ohio 45246

200

Process Description for the Remediation System Design

CONTENTS

SECTION

1.0 Introduction 1-1
- 1.1 Background 1-1
- 1.2 Overall Process Description 1-1
- 1.3 Process Design Requirements 1-5

2.0 Waste Retrieval (PFD SK-F-03909) 2-1
- 2.1 Waste Retrieval 2-1
- 2.2 Waste Transfer 2-2

3.0 Waste Preparation (PFD SK-F-03910) 3-1
- 3.1 Waste Receipt/Storage 3-1
- 3.2 Waste Segregation 3-1
- 3.3 Debris Management 3-2

4.0 Drying and Off-Gas Treatment Sheet 1 of 2 (PFD SK-F-03911) 4-1

5.0 Drying and Off-Gas Treatment Sheet 2 of 2 (PFD SK-F-03956) 5-1
- 5.1 Off-Gas Treatment Design Basis and Data 5-1
- 5.2 Off-Gas Treatment System Description 5-6

6.0 Dried Waste Blending and Loadout (PFD SK-F-03913) 6-1
- 6.1 Debris Storage 6-1
- 6.2 Blending 6-1
- 6.3 Loadout and Storage 6-1

7.0 Wastewater, Utilities, and Miscellaneous Systems 7-1
- 7.1 Wastewater 7-1
- 7.2 Utilities and Miscellaneous Systems 7-4

8.0 References 8-1

LIST OF ILLUSTRATIONS

FIGURES

1-1 Overall Process Block Flow Diagram

TABLES

1-1 Remediation System Design Data

5-1 Extent of Decomposition or Reaction
5-2 Radon Retained in the Pit Wastes
5-3 Continuous Radon Generation Rates
5-4 Solids Removal Efficiencies
5-5 Particle-Size Distributions and Removal Efficiencies
5-6 Contaminant Removal Efficiencies
5-7 Comparison of Stack Emission Rates with Emission Limits for Each Pit (lb/hr)

202

LIST OF ACRONYMS AND ABBREVIATIONS

DOE	United States Department of Energy
DOT	United States Department of Transportation
ERA	Environmental Remedial Action
FS	Feasibility Study
HEPA	High-Efficiency Particulate Air
MEPA	Medium-Efficiency Particulate Air
OSDF	On-Site Disposal Facility
OU	Operable Unit
PFD	Process Flow Diagram
RI	Remedial Investigation
US EPA	United States Environmental Protection Agency
WAC	Waste Acceptance Criteria
wt%	weight percent

SECTION 1

INTRODUCTION

1.1 Background

The objective of this project is to remove the contents (waste and debris) of Waste Pits 1 through 6, the Burn Pit, and the Clearwell; excavate the contaminated soil underlying the pits, and prepare these materials for final disposal by drying and blending. The type of pit waste material encountered during excavation varies, including standing water, sludge, waste filter cake, raffinate slag, soil, clay, pit caps and liners, and other miscellaneous waste materials. Debris encountered also varies, including 55-gallon drums, scrap metal, wooden pallets, and other miscellaneous objects.

The selection of thermal drying as the preferred remedial alternative proceeded according to the standard Comprehensive Environmental Response, Compensation, and Liability Act process. The first step was to characterize the pit wastes. The Remedial Investigation (RI) report (DOE 1994a) presents the chemical and radiological composition and other physical characteristics of the pit wastes. The University of Cincinnati (ALTER 1994) performed another relevant characterization study. Based on the characteristics of the pit wastes as described in these reports, appropriate treatability studies (DOE 1994b) were performed as the second step in the selection process.

Based on the characterization data and the results of treatability studies, a Feasibility Study (FS) (DOE 1994c) was then performed. The thermal drying alternative was selected from various remediation strategies developed in the FS. This work was performed under the direction of the Fernald Environmental Management Project site contractors who issued the RI and FS reports to the United States Environmental Protection Agency (US EPA). A Record of Decision for this project was signed by the US EPA on March 1, 1995.

Following the selection and approval of the preferred remedial alternative by the US EPA (established in the Record of Decision) and the approval of the Remedial Design Work Plan by the US EPA on June 21, 1995, the next step in this process is the design of the remediation facility.

1.2 Overall Process Description

The following description summarizes the overall process. Detailed process descriptions, based on each of the Process Flow Diagrams, are presented later in this section.

The overall objective of the remediation of Operable Unit 1 (OU1) is to remove the pit wastes and other contaminated materials, treat them so they meet the Waste Acceptance Criteria (WAC) for disposal, load

them into railcars, and ship them to an off-site disposal facility. To achieve this objective, a conceptual remediation process has been designed consisting of waste retrieval and transfer, waste preparation, drying and off-gas treatment, waste blending and loadout, and wastewater handling, as shown in Figure 1-1.

As Figure 1-1 shows, functions such as blending of waste streams and handling of drainage water from the pit materials occur in more than one area. The following paragraphs summarize the remediation process.

The majority of the waste materials are retrieved by standard mechanical excavation. During the excavation, the waste is segregated in the pits into four categories for processing: dry materials (including pit wastes, soils, cap, and liner materials), wet materials, processable debris, and nonprocessable debris. This segregation is only a gross, initial attempt performed with the excavating equipment. Further separation occurs in the waste preparation area. The wet and dry waste materials are transported by truck to the waste preparation area.

In the Waste Preparation Area, the large, non-processable debris is washed and size reduced if necessary in the pits, then transported by truck to loadout. The large, processable debris is transported by truck to the Debris Management Area inside the Waste Preparation Area. As a contingency, hydraulic mining of pit wastes is also available to retrieve wastes too wet to be handled by dry excavation equipment. The retrieved slurry is transferred to a tanker truck, from where the slurry is fed intermittently to the dryer.

Trucks used for waste transfer may be rinsed to remove gross contamination at a location next to the waste preparation area prior to moving along haul roads to minimize fugitive dust emissions. These trucks will be covered with impermeable membranes before transporting.

The waste preparation area operations consist of (1) receiving and storing the retrieved waste, (2) blending, (3) waste segregation, (4) size reduction, and (5) debris management. Waste is received and stored in separate piles of wet waste and dry waste, and a contingency storage pile of both materials. These piles are designed with the main purpose of providing surge capacity for the operating facility during scheduled and non-scheduled down time. The material remains in these piles for a few to several days to allow water to drain from the materials. Wet and dry materials are then blended to produce a mixture with physical properties amenable to the downstream screening and material handling operations. The first screening operation is a 12-inch vibrating grizzly. The oversize material from the grizzly (+12 inch) is sent to the Debris Management Area, and the undersize material from the grizzly (-12 inch) is discharged to a belt conveyor, where ferrous and non-ferrous metal is removed from the waste stream. The ferrous and non-ferrous metals are sent to the Debris Management Area with the grizzly oversize material.

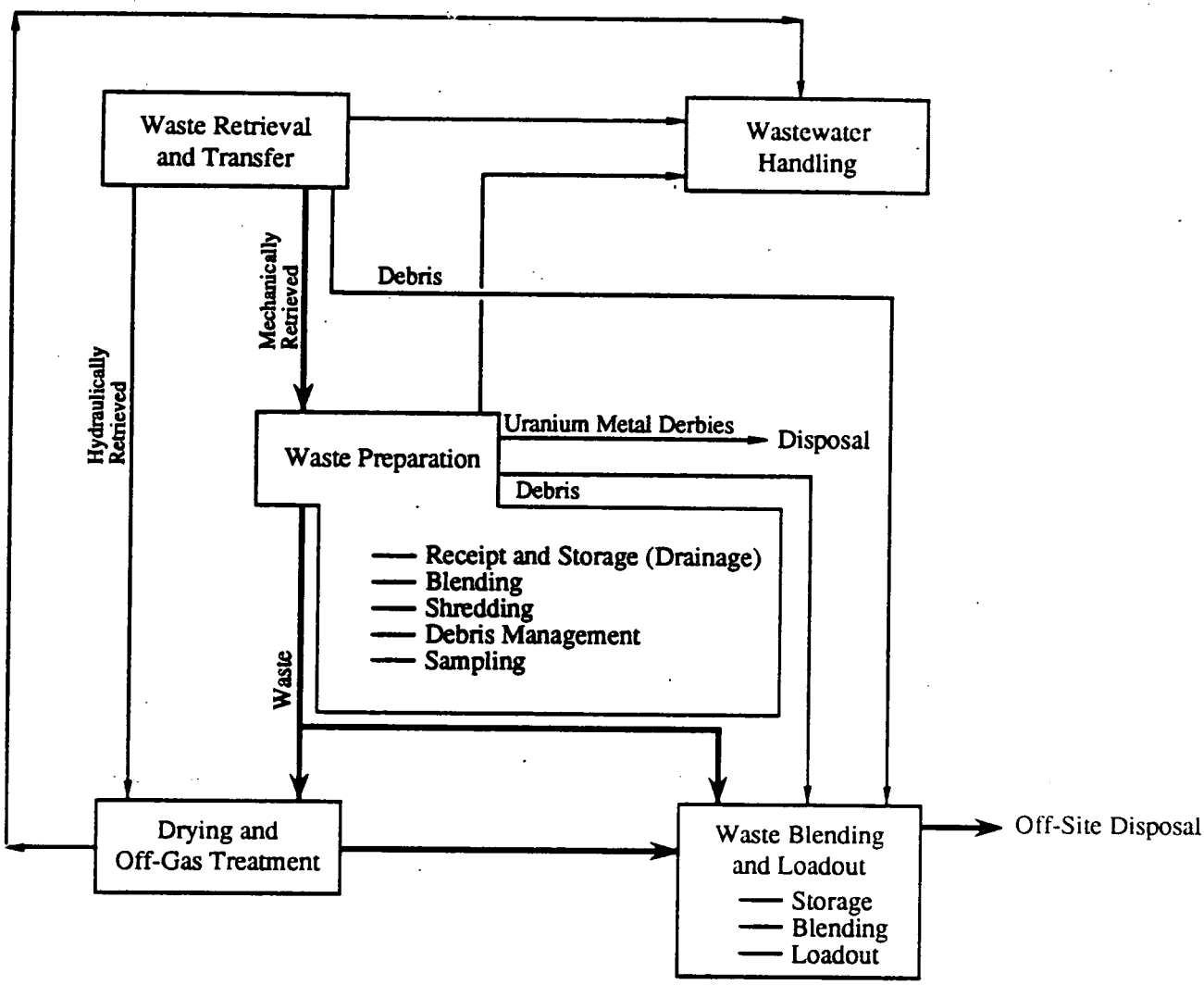

= Main Flows

= Other Flows

*ILLUS\OU-1\PO-145\PROC SYS BFD.EPS

Figure 1-1 - Overall Process Block Flow Diagram

All material sent to the Debris Management Area is manually segregated by sight. Large uranium metal pieces such as derbies and top crops found during this segregation are sent to FEMP Materials Management. Bulky debris that requires size reduction is sent to the debris shredder, then transported directly to railcar loading. The remaining debris greater than 10 inches in one dimension, and longer than 8 feet in any dimension is sent directly to railcar loading.

The remaining waste from the belt conveyor (after ferrous and non-ferrous metal removal) is sent to the process shredder for size reduction, then transferred to the 2,650 cubic yard storage pile used to feed the dryer and mixer. This pile is sampled and analyzed for RCRA constituents and specific radioisotopes before feeding to the dryer. Failed material is reworked in with incoming waste.

A portion of the materials from the 2,650 cubic yard storage area are dried to a target moisture content of 10 percent (dry weight basis). Wet materials from this storage pile are then blended in an auger mixer with the result dried product in a ratio specified to achieve a moisture content of the waste within $\pm$ 5 percent of optimum. This material is sent to the waste blending and loadout operation.

An indirect rotary dryer heated by combustion of natural gas is used to dry the wastes. The wastes pass through the dryer concurrently with a controlled flow of heated sweep air. The process off-gas consists mostly of water vapor. A cyclone is used to remove the larger particulates from the process off-gas stream. The cyclone is electrically heated to prevent condensation.

The combustion gases do not come in contact with the waste. These combustion gases are used as a source of heat which is utilized in a heat economizer that provides heated sweep air for the dryer. After leaving the heat economizer, the combustion gases are combined with outside air for further cooling. The cooled combustion gases are then released to the atmosphere through a dedicated exhaust fan and stack.

The process off-gas leaving the heated cyclone passes through the remaining off-gas treatment system, which removes water vapor and other volatiles, particulates, and acid gases. The off-gas leaving the cyclone passes through a combination venturi scrubber and packed tower, which remove the off-gas solids and acid gases, respectively. The packed tower has a cooling effect on the off-gas; therefore, the packed tower also serves to condense a portion of the water vapor from the off-gas. After the packed tower, the off-gas passes through two condensers in parallel for water vapor removal, a heater to lower the relative humidity of the off-gas, a Medium-Efficiency Particulate Air (MEPA) filter for prefiltering and, finally, a High-Efficiency Particulate Air (HEPA) filter for final filtration before release through the exhaust fan and the monitored stack.

The final operation in this remediation process is blending and loadout. Product from the single stage debris shredder, dry waste and soil, and product from the twin auger mixer are all blended together, then transported by front-end loaders to storage piles. These piles are sampled before loading into railcars

for activity per mass only. Non-processable debris from the Debris Management Area and larger, non-processable debris from the waste pits are placed on top of the waste already loaded into the railcars. The railcars are then lidded, decontaminated, and shipped off site. At the final loading stage before shipping, the waste in the railcar is at optimum moisture content.

Wastewater handling is an important ancillary operation supporting the waste retrieval operation. Successful mechanical excavation depends on control and removal of stormwater from the pits as well as the water that drains from the pit materials during excavation. Drainage water from the pit materials collected in the waste preparation area is also handled by this operation. All of this water is collected in a sump, then pumped either directly to the Biodenitrification Surge Lagoon, or to the Clearwell and then to the Biodenitrification Surge Lagoon, with ultimate treatment at the FEMP wastewater treatment system.

1.3 Process Design Requirements

This subsection presents the process design requirements for performing process operations for the remediation of pit wastes prior to shipment for disposal.

1.3.1 Pit Waste Characterization

1.3.1.1 Waste Composition

Waste composition as used for this project is defined and detailed in *Dryer Off-gas Composition, Operable Unit 1 Remediation System*, (PARSONS 1995a).

1.3.1.2 Waste Physical Characteristics

In situ moisture contents are defined for each waste pit, as shown in Table 1-1. These data are used for equipment sizing and material balances.

1.3.2 Processing Rates and Operating Times by Process Areas

1.3.2.1 Waste Retrieval (SK-F-03909)

1) Operating Time: 8 hours per day, 5 days per week
2) Retrieval Rate: 820 tons per day
3) Waste Transfer: Dump truck; 20 tons per truck

1.3.2.2 Waste Preparation (SK-F-03910)

1) Operating Time: 16 hours per day; 5 days per week

2) Storage capacities
   (1) Wet waste storage: 2,350 cubic yards (drainage water transferred to Biodenitrification Surge Lagoon)
   (2) Dryer feed storage: 2,650 cubic yards
   (3) Contingency storage: 7,000 cubic yards maximum (drainage water transferred to Biodenitrification Surge Lagoon)

Table 1-1 - Remediation System Design Data

Waste Pit	Total Waste In Situ (tons)	Wet Density (lb/ft^3)	Average Moisture Content (% Wet Basis)	Assumed Optimum Moisture (% Wet Basis)
Pit 1	119,026	128.9	24.0	11.8
Pit 2	47,259	93.6	61.1	12.4
Pit 3	348,705	84.0	60.7	20.9
Pit 4	126,683	128.9	22.5	11.8
Pit 5	96,348	72.9	79.8	21.1
Pit 6	19,038	146.9	21.5	8.4
Burn Pit	41,478	101.4	30.2	8.7
Clearwell	4,232	72.9	79.8	16.7
Soil	76,116	140.7	23.1	23.1
TOTAL	878,885			

Note: Wet density, average moisture content, and optimum moisture content are based on available DEEP data as of January 1996. Final data included in the DEEP Data Report (Package II) revises this data.

3) Screening
   (1) Equipment: 12-inch vibrating grizzly
   (2) Number of trains: one
   (3) Screen oversize: 1.0 weight percent (wt%) of feed
   (4) Screen undersize: 99.0 wt% of feed

209

4) Ferrous Metal Removal
   (1) Equipment: Magnetic belt conveyor

5) Non-ferrous Metal Removal
   (1) Equipment: Metal Detector

6) Streams received by Debris Management Area
   (1) 12-inch grizzly oversize
   (2) Ferrous metal
   (3) Non-ferrous metal
   (4) Large, processable debris

7) Streams resulting from Debris Management Area
   (1) Processable debris
   (2) Nonprocessable debris
   (3) Derbies (uranium metal)

   Note: Debris Management Area operates 8 hours per day, 5 days per week.

1.3.2.3 Drying and Off-Gas Treatment Sheet 1 of 2 (SK-F-03911)

1) Operating time: 24 hours per day, 7 days per week

2) Equipment: Indirect rotary dryer with furnace surrounding cylinder

3) Maximum dryer feed rate: 22 tons per hour (wet) (nominal, to be determined by vendor)

4) Maximum dryer feed size: 4 inches (any direction)

5) Maximum evaporation rate: 4.2 tons per hour

6) Dryer product moisture percent: 10 percent (dry basis)

7) Product temperature: 250 degrees F (maximum)

8) Dryer/furnace fuel: Natural gas

9) Natural gas gross heat value: 1,027 British thermal units/standard cubic foot

10) Natural gas supply pressure: 60 pounds per square inch gauge

11) Natural gas composition: CH_4 (96 percent), C_2H_6 (1.9 percent), N_2 (0.036 percent), other (2.064 percent)

12) Economizer: Preheats sweep air

1.3.2.4 Drying and Off-gas Treatment Sheet 2 of 2 (SK-F-03956)

1) Operating Time: 24 hours per day, 7 days per week
2) Process off-gas composition: as defined in Section 5.
3) Extent of contaminant decomposition or reaction: refer to Table 5-2.
4) Radon retained in the pit wastes: refer to Table 5-3.
5) Continuous radon regeneration rate: refer to Table 5-4.
6) Particle size distributions and removal efficiencies: refer to Table 5-5.
7) Contaminant removal efficiencies: refer to Table 5-6.
8) Stack emissions and limits: refer to Table 5-7.
9) Process off-gas temperature: 350 degrees F (maximum).

1.3.2.5 Dried Waste Blending and Loadout (SK-F-03913)

1) Operating Time: 8 hours per day, 5 days per week

2) Streams blended (to achieve optimum moisture content)
   (1) Product from twin auger mixer (mixed wet and dried waste material)
   (2) Dry waste/soil
   (3) Shredded material
   (4) Non-processable debris

3) Working storage piles are to be provided as follows:
   (1) Product from twin auger mixer: 3 days

4) Blending accomplished by material handling equipment

5) Maximum blending to loadout: 680 tons per day

6) Streams loaded into railcars
   (1) Blended waste
   (2) Nonprocessable waste (from debris management)
   (3) Large, non-processable waste (from pits)

7) Operations include railcar loading, lidding/liner placement, and decontamination

SECTION 2

WASTE RETRIEVAL (PFD SK-F-03909)

2.1 Waste Retrieval

The overall process for excavation and processing of the OU1 wastes begins with waste retrieval from the waste pits. This waste retrieval process is depicted in the PFD SK-F-03909. For more descriptive details, refer to the Waste Excavation Plan (PARSONS 1996a).

Mechanical excavation is the planned excavation method for all pits and will be accomplished using conventional earth-moving equipment, such as track-type loaders and long-reach excavators. The waste and debris removal is depicted on the above PFD as three main streams: dry waste and soil removal (Stream 101), wet waste removal (Stream 102), and large debris removal (Stream 103).

The dry waste and soil (such as cap and contaminated berm material) is excavated on an as-needed basis, placed in dump trucks, then transported for blending with wet waste at the waste preparation area (see PFD SK-F-03910) and at the blending and loadout facility next to the rail loadout area (See PFD SK-F-03913). Blending of wet and dry materials may also be performed within a given pit when necessary. During excavation of dry materials, dust suppression methods are used to minimize fugitive emissions.

Wet waste, along with some debris that is not visually apparent, is loaded into trucks for transport to the storage pits located in the waste preparation area (see SK-F-03910).

Large debris is excavated from the pits, then visually and manually segregated into processable and nonprocessable debris. The processable debris (Stream 105) is loaded into trucks for transport to the Debris Management Area (See PFD SK-F-03910). The nonprocessable debris (Stream 104) is washed at a pit side area to remove gross contamination, then loaded into trucks for transport to the loadout area (non-processable debris is defined as special case waste streams in Appendix A of the Excavation Plan).

The PFD-SK-F-03909 also shows a contingency operation for hydraulic waste removal if any wastes are encountered that cannot be mechanically excavated. Hydraulic excavation is used only as necessary, based on the decision of the responsible field engineer. A slurry pump transfers the slurry from the waste pit to a self-unloading tanker truck (Stream 109). This tanker truck serves as both storage and supply for the slurry waste and is equipped with an agitator and metering pump used to feed slurry to the dryer. In the event that using the tanker truck as both storage and supply does not prove feasible, a separate agitated slurry tank and metering pump will be provided. Space for future installations has been reserved.

2.2 Waste Transfer

Waste is transferred from the pits to the Waste Preparation Area, as depicted on PFD SK-F-03909.

All waste and debris shall be transported from the present excavation area to the waste preparation area by all-wheel-drive, articulating rear-dump trucks. As required by field and waste conditions, trucks are covered with tarps during transportation of dry materials to minimize fugitive emissions to the atmosphere. Haul roads are developed and maintained as necessary to ensure efficient truck operation and material transfer. Water sprays are used throughout to minimize airborne contamination.

Large debris found during excavation is loaded into trucks and transported or possibly moved by skid to a pad at the pit side. If debris cannot be loaded into trucks because of its size, mobile equipment will be used for size reduction. Debris washing at the pit side is employed as necessary, with additional size reduction at that point if necessary for more efficient debris handling.

When large uranium metal pieces such as derbies and top crops are detected during excavation, they are segregated and transported to FEMP Materials Management. The details of Materials Management are also described in Appendix A of the Excavation Plan.

The wastewater (precipitation and waste drainage water) handling operations shown on Sketch SK-F-03909 are discussed in Section 7.

213

SECTION 3

WASTE PREPARATION
(PFD SK-F-03910)

3.1 Waste Receipt/Storage

PFD SK-F-03910 shows the destination of the waste streams from the waste pit area as they arrive (by truck) at the waste preparation area.

The PFD also depicts a contingency stockpile (maximum 7,000 cubic yards) that is maintained, but not used, on a continual basis. The stockpile location is shown on the project preliminary site plan (SK-G-04164). The stockpile is covered to provide ready access to waste materials if inclement weather (or other factors) restrict excavation in the waste pits. The stockpile incorporates a liner and wastewater collection to remove water draining from the waste. Wet materials are stockpiled to take advantage of natural drainage.

The primary waste streams (Stream 101, dry waste/soil and Stream 102, wet waste) are dumped into their respective storage pits as shown by the stockpiles on the diagram. General arrangement sketch SK-M-03917 shows the location of the transfer area and storage pits for the primary waste streams. Wet waste is kept in the storage pits for approximately 3 days to allow free moisture to drain before further processing. Handling and destination of wastewater collected at various locations in the waste preparation area is discussed in Section 7.

In the initial preparation step, waste is retrieved from the pits to blend wetter and drier materials to achieve a waste material that is handleable (Stream 204). This mixing is by operator discretion, with the purpose and objective of preparing a blended working pile suitable for material handling and size separation. Waste retrieval and mixing is accomplished with the front-end loader in the working pile area of the Waste Preparation Area.

3.2 Waste Segregation

The first step in waste segregation is to remove debris larger than 12 inches from the blended waste stream. Waste from the blended working pile is retrieved using front-end loaders and transferred to a skip hoist, which dumps the waste onto an apron feeder, and is then transferred to a vibrating grizzly with 12-inch openings. Oversize material (+12 inch) from the grizzly (Stream 205) is collected in a pile, then transferred to the Debris Management Area by means of a front-end loader. Undersize material (-12 inch) from the grizzly (Stream 206) is discharged onto the grizzly undersize conveyor. Two separate operations occur on the undersize conveyor: ferrous metal removal and non-ferrous metal removal. Ferrous metal

(Stream 207) is separated from the waste by a magnetic belt separator. The separated ferrous metal is collected in a pile, then transferred to the Debris Management Area by a front-end loader. Non-ferrous metal (Stream 208) is detected in the waste by a metal detector, and the waste flow is diverted momentarily to remove the detected material. The separated non-ferrous metal is collected in a pile, then transferred to the Debris Management Area by a front-end loader.

After the ferrous and non-ferrous material is removed from the waste, the remaining waste discharges from the grizzly undersize conveyor into a pile (Stream 209), then is transferred by front-end loader to the process shredder skip hoist. The shredder skip hoist feeds the waste to the process shredder (Stream 213). The process shredder size reduces the waste and debris to 4 inches by 4 inches by 4 inches or less. Sketch SK-M-03917 shows the general arrangement of the process shredder in the Waste Preparation Area.

The smaller-than-4-inch material from the process shredder is used to form five 530 cubic yard piles (2,650 cubic yards). A portion of this storage pile is fed directly to the dryer (Stream 215), which reduces the moisture content in this feed to approximately 10 percent dry wt% (9 percent on a wet weight basis). Dryer feed is sampled and analyzed before further processing. Waste failing testing is reworked with incoming waste. Another portion of this storage pile is blended with the dryer product (Stream 214 as shown on PFD SK-F-03911) to achieve a moisture content below optimum for that particular pit waste. (Blending at "below optimum moisture" is required here because additional wet waste streams are added to this mixture in the blending and loadout area, bringing the final moisture content up to the required optimum.) The wet waste from the 2,650 cubic yard storage pile is transferred to a hopper feeder located above the twin auger mixer, where the wet waste and dryer product are blended.

3.3 Debris Management

The Debris Management area is located in the Waste Preparation Area and receives the large processable debris from excavation (Stream 105), the grizzly oversize (Stream 205), the ferrous metal from the grizzly undersize (Stream 207), and the non-ferrous metal from the grizzly undersize (Stream 208). Once in the Debris Management Area, these wastes are segregated, using a backhoe with a grapple, into three waste streams. Any derbies (or pieces of uranium, croptops, etc.) found during this segregation (Stream 212) are collected and sent to FEMP Materials Management for handling. (It should be noted that the total mass flow for this stream includes excess waste that is diverted with the derbies during detection. This excess will eventually be returned to the waste treatment stream.) Bulky or awkward debris that requires size reduction is sent to the debris shredder for processing (Stream 217), and is then transported to the blending area. The remaining debris from the Debris Management Area is transferred to railcar loading, where it is placed on top of the waste loaded into the railcar from the blending area. This operation is carried out using a front-end loader.

215 [redacted]

SECTION 4

DRYING AND OFF-GAS TREATMENT SHEET 1 OF 2 (PFD SK-F-03911)

PFD SK-F-03911 depicts operations for waste materials being received from the waste preparation area and processed through the dryer. In addition, this PFD shows the other primary waste processing step wherein the dryer product stream is mixed with wet (not dried) waste to produce a waste material blend that will result in achieving the optimum moisture content at the railcars. Finally, the PFD shows utilization of waste heat from the dryer and the initial removal of entrained solids from the process off-gas. The following is an operational description of these processes.

An indirectly heated rotary dryer receives and processes wet waste material of various moisture contents, depending on the type of waste. The dryer reduces the moisture content of the waste materials to 10 percent (dry weight basis). Waste materials are fed to the dryer primarily from the 2,650 cubic yard storage pile (Stream 215). Materials from the 2,650 cubic yard storage pile are transferred to a skip hoist, using a front-end loader. The skip hoist dumps into the dryer feed hopper located over the feeder and feed conveyor, which delivers the material into the dryer. Feed spirals inside the rotating shell of the dryer convey the feed materials quickly into the heated section of the dryer.

Slurry feed to the dryer is provided as a means to accommodate the hydraulic retrieval contingency only, and is not anticipated to be part of the normal operation. However, if slurry feed is required, waste slurry from a tank truck is metered directly to the feeder (Stream 110) where it is mixed with the normal feed (to avoid having to make dramatic adjustments to the dryer operations) discharging from the dryer feed hopper.

The rotary dryer system consists of a cylindrical shell rotated with a variable speed drive. The rotating cylinder is heated externally by a furnace with adequate length to satisfy heat transfer requirements. Using natural gas as fuel for combustion, heat energy for the indirect drying is produced in multiple furnace zones by a set of burners located in each zone. Burners are operated with adjustable primary air/fuel ratio, and secondary air addition to control the flame temperature so the rotating cylinder does not exceed its design temperature. Exit gases from each furnace zone are collected into a header, where they are transferred through an economizer (Stream 305) and eventually discharged through the combustion gas stack. The economizer preheats clean, outside air for use as dryer sweep air.

Heat energy from each furnace zone is indirectly transferred to the material advancing inside the rotating shell. This heat transfer from the furnace involves convection, conduction, and radiation. To ensure better mixing and, thus, efficient drying of the material inside the dryer, the shell is equipped with shallow agitating flights (flow disturbers).

The indirect rotary dryer has multiple furnace zones and is provided with individual temperature control of each zone. This ability to control the temperature throughout the dryer provides flexibility and simplicity in drying wastes with varying levels of incoming moisture content to achieve the desired moisture content in the dried product.

The slope and speed of the cylinder's rotation determines the retention time in the dryer. The slope is fixed, but the rotation speed is variable and is used to adjust the retention time as necessary, providing additional control of the drying process.

The preheated sweep air is introduced to the dryer in a co-current fashion to aid in both heating the waste and carrying the vapors produced during the drying process through the off-gas treatment system. After exiting the dryer, the process off-gas stream is drawn first through the heated cyclone and then through the rest of the off-gas treatment process shown on PFD SK-F-03956. The cyclone removes the larger particulate matter entrained in the process off-gas, while keeping the steam and vapors in the process off-gas from condensing. The captured particulate matter (Stream 313) is blended with the dryer product (Stream 314).

The dryer product is discharged into a hopper that feeds the dryer discharge conveyor. The conveyor delivers the dried product to a twin auger mixer, where it is blended with wet (not dried) waste (Stream 214) from the 2,650 cubic yard storage pile in a ratio specified to achieve the optimum moisture content at the railcars. General arrangement sketches SK-M-03919 and SK-M-03921 depict the dryer, twin auger mixer, and associated equipment and facilities.

SECTION 5

DRYING AND OFF-GAS TREATMENT SHEET 2 OF 2 (PFD SK-F-03956)

5.1 Off-Gas Treatment Design Basis and Data

SK-F-03956 presents the design in which the process off-gas is cleaned and released. The condensate and bleed streams from the various off-gas treatment unit operations are also identified.

The process off-gas leaving the dryer originates from five sources: (1) air (sweep and in-leaked), (2) vapors from the volatile components (mostly water, some organics), (3) gases generated from decomposition and/or reaction of feed components, (4) entrained solids from the feed (including associated moisture and organic content, and (5) radon generated and released during the drying process. This off-gas, which contains air, steam, particulates, and various organic, inorganic, and radioactive contaminants (Stream 311 on SK-F-03911), is scrubbed and filtered before release to the atmosphere.

The composition of the process off-gas was estimated based on the pit waste composition data given in the RI report. The composition of the pit wastes was developed from data given in Tables 4.4 through 4.10 of the Remedial Investigation report (DOE 1994). These tables include inorganic, organic, and radionuclide data for the pits. The data are reported as "Avg," "Min," and "Max." The "Max" values were used to ensure conservatism in the off-gas composition.

For some of the pits, two sets of data ("CIS" and "RI/FS") are reported in the RI tables listed above, but for Pits 5 and 6, and the Clearwell, only Characterization Investigation Study (CIS) data are available. To be conservative, for data reported in both sets the highest value was used. The CIS data reports cations only, with the exception of cyanide. The cations were combined with oxygen or other anions to form chemical components. The selection of chemical components was based on process knowledge (obtained from [1] the Remedial Investigation report and [2] interviews with Fernald Environmental Management Project personnel with extensive knowledge of the applicable process operations) and in-house processing experience at PARSONS. For those cations assumed to exist in multiple components, the cation was divided by weight fraction, as shown in Table 5-1.

Table 5-1 - Basis for Pit Waste Composition

Cation	Component	Weight Fraction
Ba	$BaCl_2$	0.5
Ba	$BaSO_4$	0.5
Cd	CdO	0.25
Cd	$CdSO_4$	0.75
Ca	$Ca(OH_2)$	0.85
Ca	CaF_2	0.1
Ca	$Ca(NO_3)_2$	0.05
Mg	MgF_2	0.8
Mg	$Mg(OH)_2$	0.15
Mg	$Mg(NO_3)_2$	0.05
K	KOH	0.6
K	KCl	0.2
K	KF	0.1
K	K_2CO_3	0.1
Na	NaOH	0.79
Na	Na_3UO_4	0.01
Na	NaCl	0.2
U	U_3O_8	0.45
U	UO_3	0.45
U	UF_4	0.1
Th	ThO_2	0.5
Th	$ThSO_4$	0.5

For Pits 1, 2, 3, 4, and the Burn Pit, both "CIS" and "RI/FS" data are reported. The Remedial Investigation/Feasibility Study (RI/FS) data reports anions, cations, and some additional parameters. In the RI/FS data, boron, molybdenum, and silicon are reported in addition to the cations reported in the CIS data, while osmium is not reported, as it is in the CIS data. For these pits, the reported anions were

219 [redacted]

coupled with the reported cations to form appropriate chemical components while preserving the individual cation and anion quantities. The data for oil and grease, total Kjeldahl nitrogen, total organic carbon, total organic nitrogen, and pH were not used.

The radionuclide data in the RI report are presented in units of picocuries per gram. These data were converted from radioactive decay units to weights, then entered in the feed composition as pure elements, with the exception of uranium and thorium. These radionuclides are present in larger quantities and were assumed to exist in multiple components. For Pits 5 and 6, and the Clearwell, (1) some of the uranium was assumed to exist as Na_3UO_4, so the remaining uranium was divided as shown in Table 5-1; (2) all of the cyanide was assumed to exist as NaCN, so the remaining sodium was divided as shown in Table 5-1. For all the pits, the total weight of each element/substance given in the RI data was preserved.

With the chemical components determined, appropriate adjustments to the milligrams/kilogram values of the cations were made to account for the added elements, and a total weight of all the components was determined. Finally, the weight of each component was divided by the total weight to normalize the data and provide a weight fraction value for each component.

For the organic composition, all of the organics reported for Pits 5 and 6, and the Clearwell, were used (only CIS data are available). For Pits 1, 2, 3, 4, and the Burn Pit, both RI/FS and CIS data are available. The RI/FS data set is extensive and most of the organic components listed in the RI report were not available in the standard METSIM data base. Consequently, a user data base was developed for METSIM that included all the necessary data for the organics of interest. In addition, the organic components present in trace quantities were not included in the material balances. Those components present in concentrations greater than 1 weight percent of the organic composition were included. This left 89 percent of Pit 1, 94.9 percent of Pit 2, 98.9 percent of Pit 3, 94.1 percent of Pit 4, and 93.5 percent of the Burn Pit organics in the material balances. Here again, the weight of each organic component was divided by the total weight of organics to provide a weight fraction value for each component. The resulting pit compositions, given in Appendix C, were input as stream data in the METSIM runs used to obtain the material balances.

For the volatile components (i.e., water, organics), the off-gas composition was determined by performing flash calculations in each zone of the dryer using the METSIM dryer simulation model developed by PARSONS (PARSONS 1995a). Flash calculations determine the distribution of volatile components between the vapor and liquid phases. Volatile components in the vapor phase report to the dryer off-gas. The quantity of sweep air is controlled so that 80 percent of the off-gas volume is water vapor.

Some of the inorganic components fed to the dryer decompose due to localized heating at the shell surface or react with steam. It is assumed that these decompositions or reactions form acids and other gases (i.e., NO_2, CO_2, HF, NH_3) to the extent shown in Table 5-2.

Table 5-2 - Extent of Decomposition or Reaction

Component	Decomposition Temperatures (°C)	Extent (%)
UF_4	(reaction with steam)	5
NH_4HCO_3	35	100
NH_4NO_3	210	2.5
$Mg(NO_3)_2$	129	5

The amount of entrained solids in the off-gas (including remaining moisture and organics) is assumed to be 5 percent of the dryer product. This estimate will be revisited based on the drying equipment procured.

Due to the radium content of the pit wastes, radon gas also is released to the process off-gas. The radon present in the wastes consists of the radon continuously generated by the material, and the radon that, although previously generated, remains trapped in the material. All of this radon is assumed to be released during the drying process as the water vapor is driven from the material. Both the radon generation rate from the material and the quantity of radon retained by the material are based on an engineering calculation (PARSONS 1994), the results of which are summarized in Tables 5-3 and 5-4. Only radon-222 is considered because of the extremely short half-lives of the other isotopes.

The off-gas treatment system presented is a design based on the off-gas compositions determined, the regulatory requirements that apply, and the results of air dispersion modeling. Based on METSIM analysis, the off-gas treatment system and associated equipment presented in the following section will meet the ARARs relevant to the off-gas emissions.

Table 5-3 - Radon Retained in the Pit Wastes

Pit	Retained Radon (pCi/g)
Pit 1	5.06E+01
Pit 2	4.37E+02
Pit 3	1.72E+02
Pit 4	2.34E+01
Pit 5	9.34E+01
Pit 6	3.90E+00
Burn Pit	1.47E+01
Clearwell	7.35E+01

221 [redacted]

Table 5-4 - Continuous Radon Generation Rate

Pit	Radon Release Rate (pCi/g/s)
Pit 1	1.06E-04
Pit 2	9.16E-04
Pit 3	3.61E-04
Pit 4	4.92E-05
Pit 5	1.96E-04
Pit 6	8.18E-06
Burn Pit	3.08E-05
Clearwell	1.54E-04

5.2 Off-Gas Treatment System Description

The first step in the off-gas treatment system is removal of large entrained solids in the electrically heated cyclone from Stream 311 (shown on PFD SK-F-03911). The cyclone is heated to prevent condensation of acid gases, steam, and organics within the unit. The cyclone off-gas (Stream 312) continues on PFD SK-F-03956, where it first passes through a venturi scrubber for further removal of solids to protect the downstream equipment from solids buildup. From the venturi scrubber, the off-gas passes through a packed tower scrubber equipped with a mist eliminator where the majority of the acid gases are removed. The scrubber uses a caustic solution which is maintained at the desired strength in the combined sump for the two scrubbers. In addition, the water-add and scrubber-bleed rates from this sump are controlled to maintain the solids level at or below 5 wt% solids.

The off-gas from the packed tower (Stream 401) is then cooled and condensed (water and organics) in two shell-and-tube type heat exchangers operated in parallel using chilled water as the cooling medium. An electric air heater is then used to reheat the off-gas leaving the condenser (Stream 402), thus reducing its relative humidity to prevent condensation in the downstream MEPA and HEPA filters. Finally, the off-gas passes through the induced-draft fan and the stack before release to the atmosphere.

Chilled water is used as the cooling medium at this time since a carbon bed for radon removal is still being considered as a future addition to the off-gas treatment system. To be effective at radon removal, the carbon beds must operate at a low relative humidity (<30 percent) and thus the off-gas temperature must be dropped sufficiently. If the carbon beds are removed from future consideration, based on the

radon emission and working level limits, the chilled water might be replaced with cooling water (using a cooling tower instead of a chiller).

The scrubber bleed (Stream 413) is sent to the contaminated water collection tank. The much cleaner condensate stream (Stream 414) is sent to the recycle water collection tank. Both of these liquid effluent streams pass through small transfer tanks from which they are pumped to their respective collection tanks.

Particulate removal efficiencies were based on the particle size distributions of the pit wastes (PARSONS 1996b) and the particulate size distributions entering the off-gas equipment. Table 5-5 presents the particle size and efficiency information. It should be noted that the concentration of solid phase radionuclides in the pit waste solids remains fixed throughout the off-gas treatment process since the solid radionuclides are removed at the same efficiencies as the rest of the solids.

Acid gas and other gaseous compound removal efficiencies are shown in Table 5-6. As previously discussed, water and organic vapors are removed from the off-gas by condensation as determined by flash calculations.

Table 5-7 compares the stack emission rates with the emission limits.

Table 5-5 - Particle-Size Distributions and Removal Efficiencies

Pit 5	Size	Weight	Cyclone	Cyclone	Weight	New wt.	Venturi	Venturi	Weight	New wt.	Tower	Tower	Weight	New wt.	MEPA	MEPA	Weight	New wt.	HEPA	HEPA	Weight	New wt.
wt% finer	(microns)	Fraction	Efficiency	Removal	Remaining	Fraction	Efficiency	Removal	Remaining	Fraction	Efficiency	Removal	Remaining	Fraction	Efficiency	Removal	Remaining	Fraction	Efficiency	Removal	Remaining	Fraction
100	100																					
88	50	0.1200	95%	0.1140	0.0060	0.0147	100%	0.0147	0.0000	0.0000												
78	30	0.1000	95%	0.0950	0.0050	0.0122	100%	0.0122	0.0000	0.0000												
67	25	0.1100	95%	0.1045	0.0055	0.0134	100%	0.0134	0.0000	0.0000												
56	20	0.1100	75%	0.0825	0.0275	0.0672	100%	0.0672	0.0000	0.0000												
44	15	0.1200	50%	0.0600	0.0600	0.1467	100%	0.1467	0.0000	0.0000												
33	10	0.1100	50%	0.0550	0.0550	0.1345	100%	0.1345	0.0000	0.0000												
22	7	0.1100	50%	0.0550	0.0550	0.1345	100%	0.1345	0.0000	0.0000												
17	5	0.0500	50%	0.0250	0.0250	0.0611	100%	0.0611	0.0000	0.0000												
11	3	0.0600	0%	0.0000	0.0600	0.1467	100%	0.1467	0.0000	0.0000												
6	1.8	0.0500	0%	0.0000	0.0500	0.1222	98%	0.1198	0.0024	0.0769	60%	0.0462	0.0308	0.0526	90%	0.0474	0.0053	0.0182	100.00%	0.0182	0.0000	0.0000
3	1	0.0300	0%	0.0000	0.0300	0.0733	90%	0.0660	0.0073	0.2308	40%	0.0923	0.1385	0.2368	85%	0.2013	0.0355	0.1227	100.00%	0.1227	0.0000	0.0000
0	0	0.0300	0%	0.0000	0.0300	0.0733	70%	0.0513	0.0220	0.6923	40%	0.2769	0.4154	0.7105	65%	0.4618	0.2487	0.8591	99.97%	0.8568	0.0003	1.0000
		1.0000		0.5910	0.4090	1.0000		0.9682	0.0318	1.0000		0.4154	0.5846	1.0000		0.7105	0.2895	1.0000		0.9997	0.0003	1.0000

Pit 6	Size	Weight	Cyclone	Cyclone	Weight	New wt.	Venturi	Venturi	Weight	New wt.	Tower	Tower	Weight	New wt.	MEPA	MEPA	Weight	New wt.	HEPA	HEPA	Weight	New wt.
wt% finer	(microns)	Fraction	Efficiency	Removal	Remaining	Fraction	Efficiency	Removal	Remaining	Fraction	Efficiency	Removal	Remaining	Fraction	Efficiency	Removal	Remaining	Fraction	Efficiency	Removal	Remaining	Fraction
100	100																					
83	70	0.1700	95%	0.1615	0.0085	0.0268	100.0%	0.0268	0.0000	0.0000												
67	40	0.1600	95%	0.1520	0.0080	0.0252	100.0%	0.0252	0.0000	0.0000												
50	25	0.1700	95%	0.1615	0.0085	0.0268	100.0%	0.0268	0.0000	0.0000												
33	12	0.1700	75%	0.1275	0.0425	0.1339	100.0%	0.1339	0.0000	0.0000												
25	9	0.0800	50%	0.0400	0.0400	0.1260	100.0%	0.1260	0.0000	0.0000												
17	5	0.0800	50%	0.0400	0.0400	0.1260	100.0%	0.1260	0.0000	0.0000												
8	2.5	0.0900	0%	0.0000	0.0900	0.2835	98.8%	0.2801	0.0034	0.0957	60%	0.0574	0.0383	0.0659	95%	0.0626	0.0033	0.0130	100.00%	0.0130	0.0000	0.0000
2	1	0.0600	0%	0.0000	0.0600	0.1890	93.0%	0.1757	0.0132	0.3723	40%	0.1489	0.2234	0.3846	85%	0.3269	0.0577	0.2278	100.00%	0.2278	0.0000	0.0000
0	0	0.0200	0%	0.0000	0.0200	0.0630	70.0%	0.0441	0.0189	0.5319	40%	0.2128	0.3191	0.5495	65%	0.3571	0.1923	0.7592	99.97%	0.7590	0.0002	1.0000
		1.0000		0.6825	0.3175	1.0000		0.9645	0.0355	1.0000		0.4191	0.5809	1.0000		0.7467	0.2533	1.0000		0.9998	0.0002	1.0000

BP	Size	Weight	Cyclone	Cyclone	Weight	New wt.	Venturi	Venturi	Weight	New wt.	Tower	Tower	Weight	New wt.	MEPA	MEPA	Weight	New wt.	HEPA	HEPA	Weight	New wt.
wt% finer	(microns)	Fraction	Efficiency	Removal	Remaining	Fraction	Efficiency	Removal	Remaining	Fraction	Efficiency	Removal	Remaining	Fraction	Efficiency	Removal	Remaining	Fraction	Efficiency	Removal	Remaining	Fraction
100	100																					
86	60	0.1400	95%	0.1330	0.0070	0.0137	100.0%	0.0137	0.0000	0.0000												
57	20	0.2900	75%	0.2175	0.0725	0.1423	100.0%	0.1423	0.0000	0.0000												
43	10	0.1400	50%	0.0700	0.0700	0.1374	100.0%	0.1374	0.0000	0.0000												
29	6	0.1400	50%	0.0700	0.0700	0.1374	100.0%	0.1374	0.0000	0.0000												
14	2	0.1500	0%	0.0000	0.1500	0.2944	98.8%	0.2909	0.0035	0.0520	60%	0.0312	0.0208	0.0353	95%	0.0335	0.0018	0.0055	100.00%	[illegible]	0.0000	0.0000
10	1	0.0400	0%	0.0000	0.0400	0.0785	93.0%	0.0730	0.0055	0.0809	40%	0.0324	0.0486	0.0824	90%	0.0741	0.0082	0.0258	100.00%	0.0258	[illegible]	[illegible]
0	0	0.1000	0%	0.0000	0.1000	0.1963	70.0%	0.1374	0.0589	0.8671	40%	0.3468	0.5202	0.8824	65%	0.5735	0.3088	0.9686	99.97%	0.9683	0.0003	1.0000
		1.0000		0.4905	0.5095	1.0000		0.9321	0.0679	1.0000		0.4104	0.5896	1.0000		0.6812	0.3188	1.0000		0.9997	0.0003	1.0000

CW	Size	Weight	Cyclone	Cyclone	Weight	New wt.	Venturi	Venturi	Weight	New wt.	Tower	Tower	Weight	New wt.	MEPA	MEPA	Weight	New wt.	HEPA	HEPA	Weight	New wt.
wt% finer	(microns)	Fraction	Efficiency	Removal	Remaining	Fraction	Efficiency	Removal	Remaining	Fraction	Efficiency	Removal	Remaining	Fraction	Efficiency	Removal	Remaining	Fraction	Efficiency	Removal	Remaining	Fraction
100	100																					
83	50	0.1700	95%	0.1615	0.0085	0.0158	100%	0.0158	0.0000	0.0000												
63	20	0.2000	75%	0.1500	0.0500	0.0929	100%	0.0929	0.0000	0.0000												
47	10	0.1600	50%	0.0800	0.0800	0.1486	100%	0.1486	0.0000	0.0000												
33	6	0.1400	50%	0.0700	0.0700	0.1300	100%	0.1300	0.0000	0.0000												
17	3	0.1600	0%	0.0000	0.1600	0.2971	100%	0.2971	0.0000	0.0000												
6	1	0.1100	0%	0.0000	0.1100	0.2043	93%	0.1900	0.0143	0.2956	40%	0.1198	0.1798	0.2998	85%	0.2547	0.0449	0.1549	100.00%	0.1549	0.0000	0.0000
0	0	0.0600	0%	0.0000	0.0600	0.1114	70%	0.0780	0.0334	0.7004	40%	0.2802	0.4202	0.7004	65%	0.4553	0.2451	0.8451	99.97%	0.8448	0.0003	1.0000
		1.0000		0.4615	0.5385	1.0000		0.9523	0.0477	1.0000		0.4000	0.6000	1.0000		0.7099	0.2901	1.0000		0.9997	0.0003	1.0000

Table 5-5 - Particle-Size Distributions and Removal Efficiencies (Continued)

Pit 1 wt% finer	Size (microns)	Weight Fraction	Cyclone Efficiency	Cyclone Removal	Weight Remaining	New wt. Fraction	Venturi Efficiency	Venturi Removal	Weight Remaining	New wt. Fraction	Tower Efficiency	Tower Removal	Weight Remaining	New wt. Fraction	MEPA Efficiency	MEPA Removal	Weight Remaining	New wt. Fraction	HEPA Efficiency	HEPA Removal	Weight Remaining	New wt. Fraction
100	100																					
78	50	0.2200	95%	0.2090	0.0110	0.0319	100.0%	0.0319	0.0000	0.0000												
56	30	0.2200	95%	0.2090	0.0110	0.0319	100.0%	0.0319	0.0000	0.0000												
39	20	0.1700	75%	0.1275	0.0425	0.1234	100.0%	0.1234	0.0000	0.0000												
22	10	0.1700	50%	0.0850	0.0850	0.2467	100.0%	0.2467	0.0000	0.0000												
17	6	0.0500	50%	0.0250	0.0250	0.0726	100.0%	0.0726	0.0000	0.0000												
5	2	0.1200	0%	0.0000	0.1200	0.3483	98.8%	0.3442	0.0042	0.1509	60%	0.0906	0.0604	0.1060	95%	0.1007	0.0053	0.0204	100.00%	0.0204	0.0000	0.0000
2	1	0.0300	0%	0.0000	0.0300	0.0871	93.0%	0.0810	0.0061	0.2201	40%	0.0881	0.1321	0.2318	90%	0.2086	0.0232	0.0891	100.00%	0.0891	0.0000	0.0000
0	0	0.0200	0%	0.0000	0.0200	0.0581	70.0%	0.0408	0.0174	0.6289	40%	0.2516	0.3774	0.6623	65%	0.4305	0.2318	0.8908	99.97%	0.8903	0.0003	1.0000
		1.0000		0.6555	0.3445	1.0000		0.9723	0.0277	1.0000		0.4302	0.5698	1.0000		0.7397	0.2603	1.0000		0.9997	0.0003	1.0000

Pit 2 wt% finer	Size (microns)	Weight Fraction	Cyclone Efficiency	Cyclone Removal	Weight Remaining	New wt. Fraction	Venturi Efficiency	Venturi Removal	Weight Remaining	New wt. Fraction	Tower Efficiency	Tower Removal	Weight Remaining	New wt. Fraction	MEPA Efficiency	MEPA Removal	Weight Remaining	New wt. Fraction	HEPA Efficiency	HEPA Removal	Weight Remaining	New wt. Fraction
100	100																					
83	50	0.1700	95%	0.1615	0.0085	0.0218	100.0%	0.0218	0.0000	0.0000												
67	25	0.1600	95%	0.1520	0.0080	0.0203	100.0%	0.0203	0.0000	0.0000												
50	15	0.1700	75%	0.1275	0.0425	0.1079	100.0%	0.1079	0.0000	0.0000												
33	7	0.1700	50%	0.0850	0.0850	0.2157	100.0%	0.2157	0.0000	0.0000												
25	6	0.0800	50%	0.0400	0.0400	0.1015	100.0%	0.1015	0.0000	0.0000												
17	5	0.0800	50%	0.0400	0.0400	0.1015	100.0%	0.1015	0.0000	0.0000												
8	2	0.0900	0%	0.0000	0.0900	0.2284	98.8%	0.2257	0.0027	0.0680	60%	0.0408	0.0272	0.0464	95%	0.0441	0.0023	0.0080	100.00%	0.0080	0.0000	0.0000
4	1	0.0400	0%	0.0000	0.0400	0.1015	93.0%	0.0944	0.0071	0.1763	40%	0.0705	0.1058	0.1804	90%	0.1624	0.0180	0.0820	100.00%	0.0820	0.0000	0.0000
0	0	0.0400	0%	0.0000	0.0400	0.1015	70.0%	0.0711	0.0305	0.7557	40%	0.3023	0.4534	0.7732	65%	0.5026	0.2706	0.9300	99.97%	0.9297	0.0003	1.0000
		1.0000		0.6060	0.3940	1.0000		0.9597	0.0403	1.0000		0.4136	0.5864	1.0000		0.7090	0.2910	1.0000		0.9997	0.0003	1.0000

Pit 3 wt% finer	Size (microns)	Weight Fraction	Cyclone Efficiency	Cyclone Removal	Weight Remaining	New wt. Fraction	Venturi Efficiency	Venturi Removal	Weight Remaining	New wt. Fraction	Tower Efficiency	Tower Removal	Weight Remaining	New wt. Fraction	MEPA Efficiency	MEPA Removal	Weight Remaining	New wt. Fraction	HEPA Efficiency	HEPA Removal	Weight Remaining	New wt. Fraction
100	100																					
89	80	0.1100	95%	0.1045	0.0055	0.0132	100.0%	0.0132	0.0000	0.0000												
80	50	0.0900	95%	0.0855	0.0045	0.0108	100.0%	0.0108	0.0000	0.0000												
71	40	0.0900	95%	0.0855	0.0045	0.0108	100.0%	0.0108	0.0000	0.0000												
54	25	0.1700	75%	0.1275	0.0425	0.1019	100.0%	0.1019	0.0000	0.0000												
36	14	0.1800	50%	0.0900	0.0900	0.2158	100.0%	0.2158	0.0000	0.0000												
27	10	0.0900	50%	0.0450	0.0450	0.1079	100.0%	0.1079	0.0000	0.0000												
18	7	0.0900	50%	0.0450	0.0450	0.1079	100.0%	0.1079	0.0000	0.0000												
8.9	3	0.0910	0%	0.0000	0.0910	0.2182	100.0%	0.2182	0.0000	0.0000												
7.1	2	0.0180	0%	0.0000	0.0180	0.0432	98.8%	0.0426	0.0005	0.0150	60%	0.0090	0.0060	0.0101	95%	0.0096	0.0005	0.0016	100.00%	0.0016	0.0000	0.0000
4	1	0.0310	0%	0.0000	0.0310	0.0743	93.0%	0.0691	0.0052	0.1508	40%	0.0603	0.0905	0.1516	90%	0.1364	0.0152	0.0490	100.00%	0.0490	0.0000	0.0000
0	0	0.0400	0%	0.0000	0.0400	0.0959	70.0%	0.0671	0.0288	0.8341	40%	0.3337	0.5005	0.8383	65%	0.5449	0.2934	0.9493	99.97%	0.9490	0.0003	1.0000
		1.0000		0.5830	0.4170	1.0000		0.9655	0.0345	1.0000		0.4030	0.5970	1.0000		0.6909	0.3091	1.0000		0.9997	0.0003	1.0000

Pit 4 wt% finer	Size (microns)	Weight Fraction	Cyclone Efficiency	Cyclone Removal	Weight Remaining	New wt. Fraction	Venturi Efficiency	Venturi Removal	Weight Remaining	New wt. Fraction	Tower Efficiency	Tower Removal	Weight Remaining	New wt. Fraction	MEPA Efficiency	MEPA Removal	Weight Remaining	New wt. Fraction	HEPA Efficiency	HEPA Removal	Weight Remaining	New wt. Fraction
100	100																					
77	40	0.2300	95%	0.2185	0.0115	0.0224	100%	0.0224	0.0000	0.0000												
62	20	0.1500	75%	0.1125	0.0375	0.0730	100%	0.0730	0.0000	0.0000												
46	10	0.1600	50%	0.0800	0.0800	0.1556	100%	0.1556	0.0000	0.0000												
31	6	0.1500	50%	0.0750	0.0750	0.1459	100%	0.1459	0.0000	0.0000												
23	4	0.0800	0%	0.0000	0.0800	0.1556	100%	0.1556	0.0000	0.0000												
15	3	0.0800	0%	0.0000	0.0800	0.1556	100%	0.1556	0.0000	0.0000												
8	1.5	0.0700	0%	0.0000	0.0700	0.1362	97%	0.1321	0.0041	0.1160	60%	0.0696	0.0464	0.0805	90%	0.0724	0.0080	0.0283	100.00%	0.0283	0.0000	0.0000
4	1	0.0400	0%	0.0000	0.0400	0.0778	90%	0.0700	0.0078	0.2210	40%	0.0884	0.1326	0.2299	85%	0.1954	0.0345	0.1215	100.00%	0.1215	0.0000	0.0000
0	0	0.0400	0%	0.0000	0.0400	0.0778	70%	0.0545	0.0233	0.6630	40%	0.2652	0.3978	0.6897	65%	0.4483	0.2414	0.8502	99.97%	0.8499	0.0003	1.0000
		1.0000		0.4860	0.5140	1.0000		0.9648	0.0352	1.0000		0.4232	0.5768	1.0000		0.7161	0.2839	1.0000		0.9997	0.0003	1.0000

Table 5-6 - Contaminant Removal Efficiencies

	Contaminant			
Unit Operation	**NO_2**	**HF**	**NH_3**	**CO_2**
Venturi Scrubber	0.3	0.9	0.9	0.6
Packed Tower Scrubber	0.9	0.95	0.95	0.95
Cumulative Efficiency	0.93	0.995	0.995	0.98

Table 5-7 - Comparison of Stack Emission Rates with Emission Limits for Each Pit (lb/hr)

	CONTAMINANT									
	NO2		CO2		HF		NH3		Rn	
Limit (ton/yr)	13.4		21542		6.22		40.69		6307 (Ci/yr)	
PIT	(lb/hr)	(ton/yr)	(lb/hr)	(ton/yr)	(lb/hr)	(ton/yr)	(lb/hr)	(ton/yr)	(pCi/L)	(Ci/yr)
Pit 1	2.65	8.7	0	0	0.015	0.05	0	0	1053	5.4
Pit 2	0.23	0.8	0	0	0	0	0	0	998	9.0
Pit 3	0.53	1.7	0	0	0	0	0	0	429	3.9
Pit 4	0	0	0.82	2.7	0.041	0.14	0	0	632	2.6
Pit 5	0.15	0.5	0	0	0	0	0	0	85	0.8
Pit 6	3.8	12.5	0	0	0.73	2.41	0	0	175	0.4
BP	0	0	0	0	0.001	0	0	0	232	1.5
CW	0.13	0.4	0	0	0	0	0	0	64	0.6

*Note: The values reported for Waste Pit 6 are conservative since the actual processing time for Waste Pit 6 is less than 1 year.

SECTION 6

DRIED WASTE BLENDING AND LOADOUT (PFD SK-F-03913)

6.1 Debris Storage

A debris storage area is provided in the blending and loadout area to receive the shredded debris and nonprocessable waste designated for railcar loading for off-site disposal. Sketch SK-M-03921 shows the general arrangement of the blending and loadout facility.

6.2 Blending

The Blending Area receives waste from four different sources: material from the debris shredder (Stream 218), dry material storage (Stream 216), material from the twin auger mixer (Stream 315), and dryer bypass (Stream 215). These materials are retrieved from their respective storage with a front-end loader, and blended together on a pad with the same front-end loader for ease of handling and to achieve the desired moisture content. The operator will determine the blending ratio of these materials. After blending, the material is transferred to a storage pile and a grab sample is pulled before loading into railcars.

6.3 Loadout and Storage

Four empty railcars are transferred from north to south into the Loadout Facility by the on-site yard locomotive and decoupled. At the opposite end of the rail spur, the cars are coupled to an in-plant railcar mover. The car mover moves the railcars into the various areas of the facility.

The Loadout Facility consists of three discrete areas. Area 1 is the railcar lid removal and liner placement area; Area 2 is the railcar loading area; and Area 3 is the decontamination area. The facility equipment is located under roof to prevent exposure to precipitation. The facility will have a curbed concrete floor which is sloped to a sump to provide containment for any liquids, such as windblown precipitation.

The first railcar is moved to Area 1 of the facility, where the lid is removed. Here, operators on adjacent structural steel platforms disconnect the lid latches from both sides of the car. Then, the operator remotely maneuvers the lifting beam with the overhead bridge crane to secure the beam to the two lifting lugs on the lid. The crane is then actuated to lift the lid from the car and store it at grade level. An area has been provided for lid repair, when required, in the lid removal area.

Next, the operators insert a plastic liner into the railcar. The top of the liner is draped over the side of the railcar to prevent contamination during loading.

The railcar is then moved by the car mover to the Area 2, where it is loaded with waste via a front-end loader. The blended waste and debris are transferred from their respective storage areas to the railcar with a front-end loader. The car mover may be required to provide limited car movement to obtain the full capacity of the railcar.

The second area will incorporate an integral track scale to provide local indication of the weight of the railcar. The net weight will be recorded on the shipping manifest along with the car serial number.

During loading of the railcars, grab samples will be taken. Each sample will be referenced to the railcar serial number. These samples will be retained at site to be used as verification samples, in case questions arise at a later date as to whether or not the shipment meets the waste acceptance criteria.

Once the car is filled, the car mover moves the filled car back to the first area. Here, the top of the liner is placed over the waste (blended and debris) and sealed. The lid is then replaced by the overhead bridge crane system and secured by latches.

The car mover then moves the car to Area 3. Here, the car is uncoupled from the train and surveyed to comply with DOT requirements. Any gross surface contamination is removed, and smears taken and counted to determine the removable contamination level. In addition, the car surface dose rate measurements are taken and recorded. During decontamination of the first car, the second car is staged by the car mover in the first area for lid removal and liner placement. The sequence continues until the second car is ready for decontamination. At that time, the car mover advances the string of cars until the second car is positioned in the decontamination area.

The sequence continues for all remaining cars until the train of four cars is completed. Then, the yard locomotive transfers the four-car train to an on-site holding area until a shipping manifest can be prepared.

If a particular car does not meet all of the shipping and disposal requirements, then the car is removed from the train and returned by the yard locomotive to the loadout facility. Once the lid is removed, a backhoe or other suitable equipment is used to remove the waste from the car and transfer it back to the blending area via a dump truck. Here, it is reblended with other waste to meet the shipping and disposal requirements. Reject waste may be blended with other waste either in the waste loadout or waste preparation areas.

The Waste Loadout Facility will be operated one shift (8 hours) per day, 5 days per week, 52 weeks per year, and will be designed for a loadout rate of 680 tpd.

WASTEWATER, UTILITIES, AND MISCELLANEOUS SYSTEMS

7.1 Wastewater

Sketch SK-F-04084 presents a block flow diagram showing the water balance for OU1. All wastewater generated by the OU1 remediation activities is treated at the FEMP wastewater treatment system prior to discharge to the Great Miami River via manhole 176B. Some peak storm water flows are discharged to Paddy's Run. The FEMP National Pollutant Discharge Elimination System (NPDES) permit governs the discharge of all water from the FEMP. The Biodenitrification Surge Lagoon is the receiving basin for wastewater sent to the FEMP wastewater treatment system from OU1. A description of the wastewater streams and the peak and average discharge rates for each stream also are identified on the water balance block flow diagram and in the discussion that follows.

Five types of wastewater streams are generated by OU1:

1) Waste pit surface water is the standing water currently on Pits 5 and 6. This water is pumped off prior to beginning waste excavation in the pit. This water is transferred through the Clearwell to the Biodenitrification Surge Lagoon using the existing piping system. New submersible pumps with level controllers will be installed in the Clearwell. The existing pumps will be removed. This operation is not included in the water balance.

2) Waste pit excavation water includes precipitation directly over the waste pit excavation operation and water that continually and freely drains from the waste into the excavation area (combined as Stream 108). It is advantageous to promote drainage and to collect and remove as much of this waste drainage water as possible to support mechanical excavation. Sketch SK-F-03909 shows the basic process for removal of water entering the open pit area. The Excavation Plan presents additional discussion of wastewater management in the pit area.

   As shown on PFD SK-F-03909, stormwater directly entering the open excavation is collected in portable sumps and pumped out of the pits to the Clearwell as quickly as practical. This pumping rate is limited so it does not exceed the capacity of the Clearwell discharge pumps. Additionally, Clearwell levels are closely monitored to prevent Clearwell overflow. Clearwell sediment levels are monitored to assure that adequate retention time is provided for the majority of solids to settle within the Clearwell. To maintain the capacity of the Clearwell, sediment is periodically dredged out and processed through the OU1 remedial facilities. If necessary to reduce sediment loading on the Clearwell, temporary settling pools will be used prior to transfer to the Clearwell. Surface

water run-in is controlled and minimized to the extent practical. Stormwater not entering the excavation area is discussed under item 5 below.

Wastewater will also drain from the excavation face and accumulate at the toe of that face. This water is pumped to the Clearwell (or first to the pit sump) with the rest of the waste pit excavation water. Depending on the final estimates for these quantities and additional waste pit excavation plan development, additional water handling systems may be advantageous and will be included as necessary to support excavation. For example, it may be advantageous, if feasible, to collect the waste drainage water and storm water in separate systems. These final decisions will be made as the design progresses.

3) Process wastewater includes water that free drains from the pit waste (Stream 201) during storage (e.g., in the waste preparation area and contingency stockpile), condensed water vapor (Stream 419), and the scrubber bleed stream (Stream 415). Process wastewater is collected in a contaminated water collection tank and transferred to the Biodenitrification Surge Lagoon.

Reuse of some of this wastewater (such as the condensate water) for washing or dust control will be maximized, where feasible, by transferring it to a recycle water collection tank. The allowable contamination levels for recycled wastewater will be determined as the design progresses. Recycled water streams will be analyzed to ensure compliance with the allowable contamination levels.

4) Decontamination water: Stream 107 is wastewater collected from debris washing operations conducted in the waste pit area. An area will be established near the Clearwell for debris washing so the waste water can be returned to the Clearwell by pumping or gravity.

Decontamination water is also generated from the decontamination of equipment, personnel, and railcars in the remedial facilities area (Stream 21). This wastewater from the remedial facilities is collected and transferred to a contaminated water collection tank.

5) Stormwater over the waste pit area that does not enter the excavation area is handled by the existing surface runoff system that feeds the Clearwell and the 18-N Basin facility, ultimately being processed by the FEMP wastewater treatment system. The storm water from drainage area "B" and Pit 5 (combined as Stream 10) is collected in the Clearwell. Water collected in the Clearwell is normally pumped to the BSL. Stormwater from drainage areas "C". "D", "E", "J", "K", and Pits 4 and 6 (combined as Stream 11) drains to a ditch that flows to the 18-N Basin Facility before being pumped to the BSL. Stormwater from drainage area "F" is also collected in the 18-N Basin Facility.

Stormwater from the new process area (approximately 10.6 acres) is handled two different ways. Stormwater collected by the roof drains from the process buildings (Stream 18) is considered clean enough to be used as recycle water. This water is collected in a cistern and pumped to the recycle water collection tank. The 25% fraction shown on the water balance diagram corresponds to the approximate roof area of the new facilities. The rest of the water from the new process area (Stream 7) has potential to be contaminated. Therefore, it is collected in a new stormwater management basin (sized for a 25-year, 24-hour storm) and pumped to the BSL. An overflow spillway for the stormwater management basin discharges excess water (up to a 100-year storm) through two retention areas, and then through a ditch north of Pit 5 to Paddy's Run. After commencing operations, all basin discharge, except overflows, will be pumped to the Biodenitrification Surge Lagoon.

The water balance sketch provides three separate sets of water balance data for 1) average conditions, 2) peak (design) conditions, and 3) a normalized yearly mass balance. The average conditions represent either the normal flow rates expected or the average flow rates for the durations specified. The peak conditions take into account existing or proposed pump capacities, 25-year-storm conditions, or higher-than-normal flows. The yearly mass balance is based on the average conditions, but with all streams normalized over a 24-hour-per-day, 365-day-per-year duration.

Pretreatment of the wastewater from the OU1 process may be necessary. This will depend on the Waste Acceptance Criteria (WAC) for the FEMP wastewater treatment system and the water quality of the OU1 wastewater. The Aquifer Restoration Project is currently developing the WAC for the FEMP wastewater treatment system, and PARSONS is developing the water quality of the OU1 wastewater to ensure that the discharge from the FEMP wastewater treatment system will meet the requirements of the NPDES permit.

7.2 Utilities and Miscellaneous Systems

Auxiliary processes and utilities required for this facility include the following:

1) Electrical power and lighting

2) Fuel (diesel and natural gas)

3) Heating, ventilation, and air conditioning (minimal requirements; basic waste processing is performed in open-sided, roof-covered areas)

4) Compressed air (instrument, plant)

5) Water (plant, treated, cooling, chilled)

6) Dust collection and suppression

7) Chemicals/reagents

8) Fire protection

Mobile dust suppression systems are used throughout the facilities on an as-needed basis to minimize airborne emissions.

To the maximum extent possible, the water needs for this facility are met through recycle of process wastewater to lower the demand for total water input to the process facility. Additional information on the overall utility requirements is presented in the *Estimate of Utility Requirements for Proposed Remedial Facilities for OU1 Remediation.*

SECTION 8

REFERENCES

(ALTER 1994) Accelerated Life Testing and Environmental Research Facility, July 1994. Cooperative Remedy Screening Program, Final Report. Cincinnati: University of Cincinnati.

(DOE 1994) United States Department of Energy, August 1994. *Remedial Investigation Report for Operable Unit 1*, Final. Fernald, Ohio: DOE Fernald Field Office.

(PARSONS 1993) PARSONS ERA Project, September 10, 1993. *Waste Pit Contents Study Report*, Revision 0. Cincinnati, Ohio: PARSONS.

(PARSONS 1995) PARSONS ERA Project, September 1995. Engineering Calculation No. 1019-56-01, Rev. 1. Fairfield, Ohio: PARSONS.

(PARSONS 1995a) ---------, September 1995. *Dryer Off-gas Composition, Operable Unit 1 Remediation System*, Rev. A. Fairfield, Ohio: PARSONS.

(PARSONS 1995b) ---------, March 1995. *METSIM Process Simulation Model, Pit Waste Indirect Thermal Drying*, Rev. 0. Fairfield, Ohio: PARSONS.

(PARSONS 1996a) ---------, March 1996. *Waste Excavation Plan for the Operable Unit 1 Remediation System Design*, Rev. F. Cincinnati, Ohio: PARSONS.

(PARSONS 1996b) ---------, March 1996. *Technical Summary of DEEP Test Data*, Revision 0. Cincinnati, Ohio: PARSONS

(SAIC 1996) Science Applications International Corporation, January 1996. *PO 19 Data Report*, Draft Final Report. Golden, Colorado: SAIC

(Weston 1988) Roy F. Weston, Inc., March 1988. *Characterization Investigation Study Geotechnical Evaluation of Waste Pit Material Properties and Boring Logs*. Albuquerque: Roy F. Weston, Inc.

2038

Control Philosophy

2038

Control Philosophy for the Remediation System Design

Operable Unit 1
Project Order 145

March 1996
Revision F

Environmental Remedial Action Project
Fernald Environmental Management Project
Fernald, Ohio
FERMCO Subcontract No. 2-21487

PARSONS

25 Merchant Street
Cincinnati, Ohio 45246

234

Control Philosophy for the Remediation System Design

2038

CONTENTS

SECTION

1.0 Introduction 1-1

1.1 Objective 1-1

1.2 Distributed Control System 1-1

1.3 General Instrumentation and Controls 1-2

2.0 Process Flow Diagram Systems 2-1

2.1 Waste Retrieval - PFD SK-F-03909 2-1

2.2 Waste Preparation - PFD SK-F-03910 2-2

2.3 Drying and Off-Gas Treatment Sheet 1 of 2 - PFD SK-F-03911 2-3

2.4 Drying and Off-Gas Treatment Sheet 2 of 2 - PFD SK-F-03956 2-6

2.5 Dried Waste Blending and Loadout - PFD SK-F-03913 2-8

2.6 Wastewater, Utilities, and Miscellaneous Systems - BFD SK-F-04084 2-8

LIST OF ACRONYMS AND ABBREVIATIONS

AWWT	Advanced Wastewater Treatment
BFD	Block Flow Diagram
DCS	Distributed Control System
HEPA	High-Efficiency Particulate Air
HOA	Hand-Off-Auto
MEPA	Medium-Efficiency Particulate Air
OCA	Open-Close-Auto
PFD	Process Flow Diagram

SECTION 1

INTRODUCTION

1.1 Objective

This report covers the general operating and control philosophy for the Operable Unit 1 Waste Pits Remediation System Design, which covers remediation of Pits 1 through 6, the Burn Pit, the Clearwell, waste pit caps, and contaminated waste pit soils. Section 2 describes the operation, process control and instrumentation for each process operation as depicted on the Process Flow Diagrams (PFDs). The process operations include waste retrieval and transfer, waste preparation, drying and off-gas treatment, waste blending and loadout, and wastewater handling. For more detailed descriptions on the operations of these systems, refer to the document titled "Process Description for the Remediation System Design."

1.2 Distributed Control System

The remediation system operation is controlled and monitored by a Distributed Control System (DCS). As a minimum, the DCS is capable of performing the following functions:

1) Collection and display of all process parameters (i.e., temperature, density, pressure, etc.); the number of analog and digital input/outputs will be determined during detailed design.

2) Orderly display and information on video monitors. The monitor display program includes graphic features for displaying process parameters.

3) Automatic or manual operation of selected control loops and digital outputs through the operator station interface.

4) Initiation of an audible and/or visual alarm signal when any input parameter, either analog or digital, exceeds a preset limit or status. The DCS also reacts to alleviate alarm situations through the use of software interlocks.

5) Allowance for programs for various data management, manipulations, trending, and report generation.

6) Automatic printing of alarms on a dedicated printer.

1.3 General Instrumentation and Controls

The following are general statements and apply to all process equipment. (Note: heating, ventilation, fire protection, and air conditioning are not included.)

1) Motor-driven equipment have a local Hand-Off-Auto (HOA) switch. Placing the HOA in the HAND position allows the associated motor to run until the switch is placed in the OFF or AUTO position. Placing the HOA in the AUTO position allows the associated motor to be operated by the DCS until the HOA switch is placed in the OFF or HAND position. The DCS provides indication when the HOA switches are in the AUTO position.

2) Motor-driven equipment have an auxiliary contact input to the DCS. These contacts are used to inform the operator when motors are running and to keep the motors running after the start signal is removed. When the auxiliary contact drops out, the DCS "start" pushbutton must be depressed again after the condition that stopped the motor has been corrected.

3) Motors can be manually started and stopped from the DCS operator's panel. The motors can also be automatically stopped or prevented from starting by the DCS or by hard wiring.

4) Solenoid valves are used to control the instrument air to the pneumatically operated equipment and open/close valves. The solenoid valves are controlled from the DCS, with "run" and "stop" pushbuttons for equipment and "open" and "close" pushbuttons for valves and interlocking functions, as described in Section 2. Each of these solenoid valves has an attached manual operator to allow local operation of the valve or equipment. When the manual operator is disengaged, the control reverts back to the DCS. Pneumatically operated open/close valves have limit switches to provide status information to the DCS.

5) The DCS alarms if a control valve is not in the position the DCS program requires.

6) Motorized valves have Open-Close-Auto (OCA) switches. Placing the OCA switch in the OPEN position causes the valve to drive open until the internal "open" limit switch is engaged. Placing the OCA switch in the CLOSE position causes the valve to drive closed until the internal "closed" limit switch is engaged. Placing the OCA switch in the AUTO position allows the DCS to control the valve. The DCS provides indication when the OCA switches are in the AUTO position.

SECTION 2

PROCESS FLOW DIAGRAM SYSTEMS

2.1 Waste Retrieval - PFD SK-F-03909

2.1.1 Mechanical Excavation

2.1.1.1 Operation

Mechanical excavation is the planned excavation method for all pits. Waste pits will be excavated using conventional earth moving equipment such as extended reach hydraulic excavators and front end loaders. These pieces of equipment shall have enclosed cabs with HEPA filtration on air intakes. Approach ramps will be excavated as required for equipment deployment and for transporting waste from the pits. The excavated waste will be loaded into dump trucks and transferred into the waste preparation facility. Processable and nonprocessable debris will also be transported by truck to the Debris Management Area and to the Waste Loadout Area, respectively. During excavation of dry materials, dust suppression methods will be used to minimize fugitive emissions.

Stormwater and waste-drainage water will drain into sumps located at the bottom of the pit, then pumped directly to the Clearwell for eventual treatment in the FEMP wastewater treatment facility.

2.1.1.2 Instrumentation and Controls

1) The waste-drainage water collection sump(s) will contain an automatic level control to start the drainage water collection pump when the sump is at a pre-set high level, and shut off the pump when the sump is at a pre-set low level.

2) The drainage water collection pump will also have local, manual switches.

3) The drainage water collection pump outlet will contain a flow indicator/totalizer.

2.1.2 Hydraulic Waste Removal

2.1.2.1 Operation

The PFD also depicts a contingency operation for hydraulic waste removal if any wastes are encountered that cannot be mechanically excavated. A slurry pump on a boom crane pumps the slurry from the waste pits to a tanker truck. The tanker truck transports the slurry to the dryer, and the waste slurry is metered in as part of the dryer feed. If metering the slurry directly from the tanker truck does not prove to be feasible, the tanker truck is unloaded into an agitated slurry tank (designated as future equipment), which uses a metering pump to feed the dryer. This contingency hydraulic waste removal operation is only used as necessary based on the decision of the waste excavation supervisor.

2.1.2.2 Instrumentation and Controls

1) The slurry pump has local manual controls and switches.

2) The tanker truck has its own level instrumentation.

3) The tanker truck has its own HOA switches for agitator and pumps.

4) The slurry tank has automatic level instrumentation. (FUTURE)

5) The slurry tank agitator has torque indication. (FUTURE)

6) The slurry tank metering pump has automatic controls.

7) Alarms:
   (1) The tanker truck has a high-level alarm.
   (2) The slurry tank has a high-level alarm. (FUTURE)
   (3) The agitator in the slurry tank has a high-torque alarm. (FUTURE)

2.2 Waste Preparation - PFD SK-F-03910

2.2.1 Operation

The waste preparation area operations consist of (1) receiving and storing the retrieved waste, (2) blending, (3) waste segregation, (4) size reduction, and (5) debris management. Waste is received and stored in piles of wet waste, dry waste, and a contingency storage pile of both. The main purpose of these piles is to provide surge capacity for the operating facility during scheduled and non-scheduled

240 [redacted]

downtime. The material remains in these piles for a few to several days to allow water to drain from the materials. Wet and dry materials are then blended to produce a mixture with physical properties amenable to the downstream screening and material handling operations. The first screening operation is a 12-inch vibrating grizzly. The oversize material from the grizzly (+12 inch) is sent to the Debris Management Area, and the undersize from the grizzly (-12 inch) is discharged to a belt conveyor, where ferrous and non-ferrous metal is removed from the waste stream. The ferrous and non-ferrous metals are sent to the Debris Management Area with the grizzly oversize. All material sent to the Debris Management Area is segregated into three streams: (1) Derbies found during this segregation are sent to FEMP Materials Management; (2) Bulky debris that requires size reduction is sent to the debris shredder, then transported directly to railcar loading; (3) Debris that does not require size reduction is sent directly to railcar loading.

The remaining waste from the belt conveyor (after ferrous and non-ferrous metal removal) is sent to the process shredder for size reduction, then transferred to the 2,650 cubic yard storage pile. This storage pile provides both feed to the dryer and material for adjusting the moisture content of the dryer product.

The contingency stockpile (7,000 cubic yards maximum) will be covered when not used.

2.2.2 Instrumentation and Controls

1) Skip hoists have standard instrumentation/controls as supplied by the vendor.

2) A high torque controller on the shredders shuts down the operation until the problem is alleviated.

3) The dust suppression system for the shredders is provided with local flow indication.

4) The non-ferrous and ferrous metal removal systems are fully automated.

5) The shredders are equipped with an automatic fire protection system that is linked to the DCS.

2.3 Drying and Off-Gas Treatment Sheet 1 of 2 - PFD SK-F-03911

2.3.1 Operations

The dryer receives waste materials with various moisture contents depending on the type of waste. Waste materials are fed into the dryer from the 2,650 cubic yard storage pile. Some of the waste materials are also fed intermittently as a slurry from a tanker truck (only as a contingency method). Both of these materials are metered into the dryer and dried to 10 percent moisture content (dry weight basis).

The rotary dryer system consists of a cylindrical shell rotated with a variable speed drive. The rotating cylinder is heated externally by a furnace with adequate length to satisfy heat transfer requirements. Using natural gas as fuel for combustion, heat energy for the indirect drying is produced in multiple furnace zones by a set of burners located in each zone. Burners are operated with adjustable primary air/fuel ratio, and secondary air addition to control the flame temperature so the rotating cylinder does not exceed its design temperature.

The drying operation is controlled by adjusting the temperature conditions in each zone of the dryer, the feed rate into the dryer, and the retention time in the dryer. The retention time is controlled by varying the speed of rotation of the dryer shell. The feed rate is controlled by a variable rate feeder, and the temperature conditions are manually set on the temperature controllers for each zone of the multiple-zone furnace. Product moisture content and temperature are monitored and used as feedback data for manual control of the drying operation.

The product moisture content is targeted at 10 percent so that the optimum moisture content of the waste can be achieved in the railcar by mixing the dryer product with wet (not dried) material from the 2,650 cubic yard storage pile in the twin auger mixer and blending with other streams before loading into the railcar. Knowing the moisture content and flow rate of the dried product, and the moisture content of the wet material, the flow of the wet material is controlled to achieve the desired moisture content.

The economizer utilizes the heat available in the combustion gases exiting the dryer to preheat the sweep air. Measurement of the heated sweep air temperature and control of the combustion gas flow through the economizer are used to control the sweep air temperature.

The cyclone is heated to prevent condensation of acid gases, steam, and organics within the unit.

A more complete explanation of the operation is available in the Process Description.

2.3.2 Instrumentation and Controls

To support and control the operation depicted in PFD SK-F-03911, the following major controls and instrumentation are implemented.

1) A burner management system ensures safe operation of the dryer. The safety-interlock logic ensures that the required limits and conditions (as specified by the vendor and standard burner management/safeguard practice) are satisfied prior to permitting start-up, continued operation, or shutdown of the dryer. If the limits and conditions of the logic are not met, the management system does not allow startup of the burners, or shuts them down if in operation.

242

2) The burners in each zone are automatically controlled to maintain the selected shell temperatures. The shell temperatures are selected manually by the operator.

3) The fuel/air ratio of each burner is controlled by a pressure balanced regulator or a fully metered electronic control integrated with a programmable microprocessor as determined by the vendor.

4) The temperature of the sweep is controlled by varying the quantity of the combustion gases passing through the economizer. The unused portion will by-pass the economizer.

5) The volume of sweep air is controlled by feedback of the flow rate leaving the cyclones to the variable speed drive of the sweep air supply fan.

6) The velocity of the air entering the cyclones is controlled by varying the number of cyclones operated (valving them in or out as needed) based on the flow rate measured after the cyclones.

7) The skip hoists, feeders, mixers, and other equipment are provided with standard controls as specified by the vendors.

8) Temperature instrumentation is provided in the following locations: primary and secondary combustion air to burners, dryer shell temperature in each zone, combustion gases in each furnace zone in various locations in the annular space between the furnace wall and the dryer shell, combustion gases exiting each furnace zone, air to and from the economizer, combustion gases to and from the economizer, sweep air to the dryer, process off-gas from the dryer, dryer product temperature just before leaving the last dryer zone, and process off-gas from the cyclone.

9) Flow instrumentation is provided on the following: natural gas to the burners, primary and secondary combustion air to the burners, total combustion gas to the stack, process off-gas from the cyclone, air to the economizer, air bypassing by the economizer, sweep air to the dryer, slurry feed to the dryer, and feed rate to the dryer.

10) Pressure instrumentation is provided on the following: natural gas to burners, primary and secondary combustion air to burners, process off-gas from dryer, and process gas from cyclone.

11) Moisture content determination is performed using both on-line instrumentation and grab sample techniques for the dryer product, material from the 2,650 cubic yard storage pile, and the discharge from the twin auger mixer.

12) The skip hoists, feeders, mixers, and other equipment are provided with standard instrumentation as specified by the vendors.

2.4 Drying and Off-Gas Treatment Sheet 2 of 2 - PFD SK-F-03956

2.4.1 Operations

On this flowsheet, the process off-gas leaving the heated cyclone is further cleaned, cooled, and condensed in an off-gas treatment system consisting of the following unit operations: (1) venturi scrubber, (2) packed-tower scrubber, (3) condenser, (4) reheater, (5) Medium-Efficiency Particulate Air (MEPA) filters, (6) High-Efficiency Particulate Air (HEPA) filters, and (7) blower with stack. In addition, the condensate and bleed streams from the various unit operations are also transferred to wastewater or recycle collection tanks.

On this PFD, the off-gas (which has already passed through the cyclone on the previous PFD) passes through a venturi scrubber for further removal of solids to protect the downstream equipment from solids buildup. From the venturi scrubber, the off-gas passes through a packed tower scrubber equipped with a mist eliminator, where the majority of the acid gases are removed. The scrubber uses a caustic soda solution to scrub the acid gases. The caustic solution is maintained at the desired strength in the combined sump for the two scrubbers. In addition, the water-add and scrubber-bleed rates from this sump are controlled to maintain the solids level at or below 5 wt% solids.

The off-gas from the packed tower is then cooled and condensed (water and organics) in a shell-and-tube type heat exchanger using chilled water as the cooling medium. An electric air heater is then used to reheat the off-gas leaving the condenser, thus reducing its relative humidity to prevent condensation in the downstream MEPA and HEPA filters. Finally, the off-gas passes through the induced-draft fan and the stack before release to the atmosphere.

The scrubber bleed is sent to the contaminated water collection tank. The much cleaner condensate stream is sent to the recycle water collection tank.

A more complete explanation of the operation is available in the Process Description.

2.4.2 Instrumentation and Controls

To support and control the operation depicted in PFD SK-F-03956, the following major controls and instrumentation are implemented:

1) The temperature of the off-gas leaving the condenser is automatically controlled by varying the flow rate of the chilled water passed through the condenser.

244 [redacted]

2) The temperature of the off-gas leaving the reheater uses a temperature controller for the electric heat.

3) The total solids (suspended and dissolved) in the scrubber sump is manually controlled by setting the bleed to maintain the density below a set maximum value.

4) The caustic strength in the scrubber sump is controlled by monitoring the pH, with automatic addition of caustic when required.

5) The position of the venturi insert in the variable throat venturi scrubber is controlled by monitoring the pressure drop across the venturi.

6) Temperature instrumentation is provided on the following: process off-gas streams to and from the condenser, scrubber, and reheater; chilled water to and from the condenser; and scrubber sump liquid.

7) Flow instrumentation is provided on the following: water and caustic makeup (totalizers) to the scrubber sump, chilled water, venturi scrubber and packed tower recycle, and scrubber bleed and condensate (totalizers).

8) Level instrumentation is provided for the following: scrubber sump, condensate transfer tank, wastewater transfer tank, and caustic day tank.

9) Differential pressure instrumentation is provided on the following: MEPA filters, HEPA filters, and scrubber.

10) An isokinetic sampler/monitor is provided for the process off-gas stack. Isokinetic sampling is continuous during normal operation with stack data input to the DCS.

11) Caustic level in the day tank will be maintained automatically using an automatic filling system.

2.5 Dried Waste Blending and Loadout - PFD SK-F-03913

2.5.1 Operation

The Waste Blending and Loadout Facility consists of blending, railcar loading, lid handling, and railcar decontamination. Railcar loading incorporates an integral track scale to provide local indication of gross railcar weight to determine net load weight. During loading of the railcar, composite grab samples of the waste are taken to test for total rad only. (Refer to "Waste Loadout Description" for more detailed information.)

2.5.2 Instrumentation and Controls

1) A local weigh scale is used for the railcar filling operation.
2) A local flow indicator/totalizer is provided for the decontamination water.
3) Level control is provided for the decontamination water sump.

2.6 Wastewater, Utilities, and Miscellaneous Systems (BFD-SK-F-04084)

2.6.1 Operation

Refer to Section 7 of the "Process Description for the Remediation System Design" for operational detail.

2.6.2 Instrumentation and Controls

1) Spill Containment Sump Pumps: Pump control is entirely manual. Off-on control is incorporated in a local manual motor starter. Before running the pump, the operator manually operates a discharge valve to direct flow from the sump to a building sump tank or spare storage tank, depending on the contents of the sump.

2) Wash Water Sump Pump: The pump is controlled by a locally mounted HOA switch. The pump may be manually run in HAND position for maintenance purposes. In AUTO position, pump operation is controlled by level switches mounted in the sump tank. The liquid, on reaching a predetermined level in the sump tank, closes these level switches, which energizes the electrical contactor. An auxiliary contact closes during a decreasing level until the low-level switch opens, breaking the seal-in circuit and stopping the pump at low level.

246

3) Building sump pumps are controlled by locally mounted HOA switches. Each individual pump may be run manually in the hand position for maintenance purposes. In auto position, pump operation is controlled by low-, high-, and high-high-level switches mounted in the tank. The liquid, on reaching a predetermined level in the sump tank, closes the low-level contacts in both pump circuits. A continued rising sump level eventually closes the high-level contact in the pump circuit, initiating its start. An auxiliary contact closes the circuit during a decreasing level until the low-level switch opens, breaking the seal-in circuit and stopping the pump at the low level. Should the inflow exceed the capacity of the pump, or should the pump be out of service, the level will continue to rise in the tank, closing the high-high contacts. This will sound the building sump pump high-high alarm, and initiate the start of the standby pump. Both pumps will continue to operate until the low level contacts open, breaking the seal-in circuits and stopping both pumps.

4) Water collection tanks have automatic level controls, and automatic transfer pumps with local, manual switches as well.

5) Emergency Horn Valve: Solenoid valve opens when power is lost at the valve.

6) Alarms:
   (1) Fire alarm system detects a fire or a pull station is activated.
   (2) Emergency shutdown is activated.
   (3) Plant compressed air pressure low.
   (4) Building sump tank reaches high-high level.

2038

Mass Balances

WASTE PIT MASS BALANCES

Included are the mass balances developed for each waste pit (Pits 1 through 6, the Burnpit, and the Clearwell).

The mass balances are arranged in sets, with each set representing a different pit. Within each set are individual mass balance sheets arranged according to flowsheet number, with each flowsheet (listed below) representing a different step in the remediation process:

SK-F-03909	Waste Retrieval
SK-F-03910	Waste Preparation
SK-F-03911	Drying and Off-gas Treatment (Sheet 1 of 2)
SK-F-03956	Drying and Off-gas Treatment (Sheet 2 of 2)
SK-F-03913	Dried Waste Blending and Loadout

MASS BALANCES

PIT 1

SK-F-03909 **WASTE RETRIEVAL (PIT 1)**

	101	102	103	104	105	106	107	108	109	110	111
COMPONENT	Dry Waste & Soil Removal	Wet Waste Removal	Large Debris Removal	Large Non-Proc Removal	Large Proc Removal	Wash Water Supply	Wash Water to Clearwell	Storm Water to Clearwell	Slurry to Tanker	Slurry to Dryer	Precip to Pits
Operating Time (hrs/day)	8	8	8	8	8	Intermittent	Intermittent	8	Intermittent	Intermittent	Intermittent
Operating Time (days/wk)	5	5	5	5	5			5			
Solids (lbs/hr)	7703	184191	2763	1381	1381						
Water/Liquids (lbs/hr)	2314	45127	655	327	327			12893			
Water Vapor (lbs/hr)											
Air/Gas (lbs/hr)											
Mass Flow (lbs/hr)	10017	229318	3418	1709	1709	0	0	12893	0	0	0
Vol. Flow (gpm)								25.8			
Volumetric Flow (scfm)											
Temperature (F)											

[redacted]
250

2038

[redacted]

SK-F-03910 **WASTE PREPARATION (PIT 1)**

	201	202	203	204	205	206	207	208	209	210	211	212	213	214	215	216	217	218
COMPONENT	Drainage to Clearwell	Wet Waste Mixing	Dry Waste Mixing	Blended Waste to Grizzly	> 12" to Mechncal Segreg'n	Grizzly < 12" Undersize	Ferrous Removal	Metal Removal	Final Conveyor D'charge	Total to Debris Man.	Debris to Loadout	Derbies to Disposal	Waste to Shredder	10 Day Stg. to T. Auger	10 Day Stg. to Dryer	Dry Waste to Blending	Debris to Shredder	Shred'd Mat'l to Loadout
Operating Time (hrs/day)	16	16	16	16	16	16	16	16	16	16	8	8	16	24	24	16	8	8
Operating Time (days/wk)	5	5	5	5	5	5	5	5	5	5	5	5	5	7	7	5	5	5
Solids (lbs/hr)		92095	0	92095	921	91174	460	460	90254	1842	760	253	90254	7408	35570	3852	4052	4052
Water/Liquids (lbs/hr)	737	21827	0	21827	218	21608	109	109	21390	437	180	60	21390	1756	8430	1157	960	960
Water Vapor (lbs/hr)																		
Air/Gas (lbs/hr)																		
Mass Flow (lbs/hr)	737	113922	0	113922	1139	112783	570	570	111644	2278	940	313	111644	9164	44000	5009	5013	5013
Vol .Flow (gpm)	1.5																	
Vol. Flow (scfm)																		
Temperature (F)																		

NOTE: Stream 212 includes derbies, small and large pieces or uranium, crop tops, etc., along with the excess waste that is diverted with these materials during detection. In actuality, derbies are a small part of this stream.

Pit 1 Balance	SK-F-03911									
Stream No.	110	214	215	301	302	303	304	305	306	307
Component	SLURRY TO DRYER	10-DAY STG. TO T. AUGER	10-DAY STG. TO DRYER	AMBIENT AIR TO ECON'R	HOT SWEEP AIR	TOTAL AIR TO BURNERS	TOT. NAT GAS TO BURNERS	FURNACE OG TO ECON'R	FURNACE OG FROM ECON'R	COOLING AIR
Operating Time (hrs/day)	INTERMITTENT	24	24	24	24	24	24	24	24	24
Operating Time (days/wk)		7	7	7	7	7	7	7	7	7
Solids (Total) (lb/hr)		7408	35570	0	0	0	0	0	0	0
Liquids (Total) (lb/hr)		1756	8430	0	0	0	0	0	0	0
H2O (lb/hr)		1755.0	8426.8	0	0	0	0	0	0	0
NaOH (lb/hr)				0	0	0	0	0	0	0
Other Salts (Total) (lb/hr)				0	0	0	0	0	0	0
Organics (lb/hr)		0.7	3.2	0.0	0.0	0.0	0.0	0.0	0.0	0.0
Gas (Total) (lb/hr)				1954	1954	23326	615	23941	23941	33927
H2O (lb/hr)				27	27	317	0	1652	1652	461
N2 (lb/hr)				1484	1484	17716	0	17716	17716	25768
O2 (lb/hr)				443	443	5293	0	2866	2866	7698
NO2 (lb/hr)				0	0	0	0	0	0	0
CO2 (lb/hr)				0	0	0	0	1707	1707	0
HF (lb/hr)				0	0	0	0	0	0	0
NH3 (lb/hr)				0	0	0	0	0	0	0
Rn (pCi/L)				0	0	0	0	0	0	0
Other (lb/hr)				0	0	0	615	0	0	0
Total Mass Flow (lb/hr)		9164	44001	1954	1954	23326	615	23941	23941	33927
Gas Flow (scfm)				432	432	5157	223	5392	5392	7501
Gas Flow (acfm)				446	881	5326	230	13307	12931	7747
Temperature (F)				77	600	77	77	823	787	77
Pressure (in WC)										
Design Flow (acfm)										
Heat Content (BTU/hr)			-1220	31236	277665	372953	0	6450218	6203789	542460

252

2038

253

[redacted]

Pit 1 Balance								
Stream No.	308	309	310	311	312	313	314	315
Component	FURNACE OG TO FAN	FURNACE OG D'CHARGE	PROCESS WATER TO CLEAN	PROCESS OG TO CYCLONE	PROCESS OG TO SCRUBBER	CYCLONE SOLIDS	DRYER PRODUCT TO MIX	DRYER PRODUCT FROM MIX
Operating Time (hrs/day)	24	24	INTERMITTENT	24	24	24	24	24
Operating Time (days/wk)	7	7		7	7	7	7	7
Solids (Total) (lb/hr)	0	0		1776	612	1164	33748	42320
Liquids (Total) (lb/hr)	0	0		178	61	116	3376	5248
H2O (lb/hr)	0	0		177.5	61.2	116.4	3373.1	5244.5
NaOH (lb/hr)	0	0		0	0	0	0	0
Other Salts (Total) (lb/hr)	0	0		0	0	0	0	0
Organics (lb/hr)	0.0	0.0		0.1	0.0	0.1	2.7	3.4
Gas (Total) (lb/hr)	57868	57868		6877	6877	0	0	0
H2O (lb/hr)	2114	2114		4901	4901	0	0	0
N2 (lb/hr)	43483	43483		1484	1484	0	0	0
O2 (lb/hr)	10564	10564		450	450	0	0	0
NO2 (lb/hr)	0	0		37.874	37.874	0	0	0
CO2 (lb/hr)	1707	1707		0.004	0.004	0	0	0
HF (lb/hr)	0	0		3.087	3.087	0	0	0
NH3 (lb/hr)	0	0		0.041	0.041	0	0	0
Rn (pCi/L)	0	0		177	160	0	0	0
Other (lb/hr)	0	0		1.489	1.489	0	0	0
Total Mass Flow (lb/hr)	57868	57868		8831	7551	1281	37123	47568
Gas Flow (scfm)	12893	12893		2151	2151	0	0	0
Gas Flow (acfm)	21328	21328		2725	3004	0	0	0
Temperature (F)	400	400		199	266	266	199	
Pressure (in WC)				405	399			
Design Flow (acfm)								
Heat Content (BTU/hr)	6746249	6746249		5543877	5687820	77151	1415333	

Pit 1 Balance	SK-F-03956									
Stream No.	312	401	402	403	404	405	406	407	408	409
Component	OFFGAS TO SCRUBBER	OFFGAS TO CONDEN'R	OFFGAS TO REHEATER	CHILLED WATER TO CONDEN'R	CHILLED WTR. FROM CONDEN'R	OFFGAS TO MEPA	OFFGAS TO CARBN BEDS	OFFGAS TO HEPA FILTER	OFFGAS TO FAN	OFFGAS TO ATMOSPHE
Operating Time (hrs/day)	24	24	24	24	24	24	24	24	24	24
Operating Time (days/wk)	7	7	7	7	7	7	7	7	7	7
Solids (Total) (lb/hr)	612	9.7	9.7	0	0	9.7	2.5	2.5	0.0008	0.0008
Liquids (Total) (lb/hr)	61	0	0	549018	549018	0	0	0	0	0
H2O (lb/hr)	61.2	0.0	0.0	549018.4	549018.4	0.0	0.0	0.0	0.0	0.0
NaOH (lb/hr)	0	0.00	0.00	0.00	0.00	0.00	0.00	0.00	0.00	0.00
Other Salts (Total) (lb/hr)	0	0.00	0.00	0.00	0.00	0.00	0.00	0.00	0.00	0.00
Organics (lb/hr)	0.0	0.0	0.0	0.0	0.0	0.0	0.0	0.0	0.0	0.0
Gas (Total) (lb/hr)	6877	6344	1948	0	0	1948	1948	1948	1948	1948
H2O (lb/hr)	4901	4413	17	0	0	17	17	17	17	17
N2 (lb/hr)	1484	1484	1484	0	0	1484	1484	1484	1484	1484
O2 (lb/hr)	450	444	444	0	0	444	444	444	444	444
NO2 (lb/hr)	38	2.651	2.651	0.000	0.000	2.651	2.651	2.651	2.651	2.651
CO2 (lb/hr)	0	0.000	0.000	0.000	0.000	0.000	0.000	0.000	0.000	0.000
HF (lb/hr)	3	0.015	0.015	0.000	0.000	0.015	0.015	0.015	0.015	0.015
NH3 (lb/hr)	0	0.000	0.000	0.000	0.000	0.000	0.000	0.000	0.000	0.000
Rn (pCi/L)	160	194	1146	0	0	1053	1053	1053	1053	1053
Other (lb/hr)	1	1	1	0	0	1	1	1.133	1.133	1.133
Total Mass Flow (lb/hr)	7551	6354	1957	549018	549018	1957	1950	1950	1948	1948
Gas Flow (scfm)	2151	1972	429	0	0	429	429	429	429	429
Gas Flow (acfm)	3004	2486	421	0	0	458	458	458	458	458
Liquid Flow (gpm)	0	0	0	1097	1097	0	0	0	0	0
Temperature (F)	266	195	50	42	51	95	95	95	95	95
Pressure (in WC)	399	367	363							
Design Flow (acfm)										
Heat Content (BTU/hr)	5687820	4920589	10139	-18963546	-13935847	27934	27904	27904	27893	27893

254

2038

255

[redacted]

Pit 1 Balance										
Stream No.	410	411	412	413	414	415	416	417	418	419
Component	TOTAL SCRUBBER D'CHARGE	VENTURI RECYCLE	PACKED TOWER RECYCLE	SCRUBBER BLEED	CONDENSA TO TRANS. TANK	WATER TO COLLECT. TANK	SCRUBBER WATER MAKEUP	SCRUBBER CAUSTIC SUPPLY	VENTURI OFFGAS	COND. TO RECYCLE TANK
Operating Time (hrs/day)	24	24	24	24	24	24	24	24	24	24
Operating Time (days/wk)	7	7	7	7	7	7	7	7	7	7
Solids (Total) (lb/hr)	1444	658	184	602	0	602	0	0	16.9	0
Liquids (Total) (lb/hr)	27443	12500	3500	11443	4396	11443	10624	224	0	4396
H2O (lb/hr)	27090.1	12339.5	3455.1	11295.6	4396.2	11295.6	10624.2	111.9	0.0	4396.2
NaOH (lb/hr)	180.11	82.04	22.97	75.10	0.00	75	0.00	111.87	0.00	0.00
Other Salts (Total) (lb/hr)	171.65	78.18	21.89	71.57	0.00	72	0.00	0.00	0.00	0.00
Organics (lb/hr)	0.6	0.3	0.1	0.3	0.1	0.3	0.0	0.0	0.0	[illegible]
Gas (Total) (lb/hr)	0	0	0	0	0	0	0	0	6490	0
H2O (lb/hr)	0	0	0	0	0	0	0	0	4531	0
N2 (lb/hr)	0	0	0	0	0	0	0	0	1484	0
O2 (lb/hr)	0	0	0	0	0	0	0	0	448	0
NO2 (lb/hr)	0.000	0.000	0.000	0.000	0.000	0.000	0.000	0.000	26.512	0.000
CO2 (lb/hr)	0.000	0.000	0.000	0.000	0.000	0.000	0.000	0.000	0.002	0.000
HF (lb/hr)	0.000	0.000	0.000	0.000	0.000	0.000	0.000	0.000	0.309	0.000
NH3 (lb/hr)	0.000	0.000	0.000	0.000	0.000	0.000	0.000	0.000	0.000	0.000
Rn (pCi/L)	0	0	0	0	0	0	0	0	189	0
Other (lb/hr)	0.000	0.000	0.000	0.000	0.000	0.000	0.000	0.000	1.296	0.000
Total Mass Flow (lb/hr)	28045	12500	3500	12045	4396	12045	10624	224	6507	4396
Gas Flow (scfm)	0	0	0	0	0	0	0	0	2018	0
Gas Flow (acfm)	0	0	0	0	0	0	0	0	2549	0
Liquid Flow (gpm)	55	25	7	23	9	23	21	0.3	0	9
Temperature (F)	150	150	150	150	50	150	77	77	197	50
Pressure (in WC)									377	
Design Flow (acfm)										
Heat Content (BTU/hr)	1995074	900743	252208	842123	-117222	842123	0	-70	5055227	-117222

SK-F-03913 **DRIED WASTE BLENDING & LOADOUT** **(PIT 1)**

	211	215	216	218	315	501	502	503	504	505	506
COMPONENT	Debris to Loadout	10 Day Dryer Bypass	Dry Waste to Blending	From Debris Shredder	Dryer Product from Mix	Mixed Mat'l to Blending	Mixed Mat'l to Storage	Mixed Mat'l to Screen'g	Mixed Mat'l to Loading	Total to Decon	To Off-Site Disposal
Operating Time (hrs/day)	8	24	16	8	24	8	8	8	8	8	8
Operating Time (days/wk)	5	7	5	5	7	5	5	5	5	5	5
Solids (lbs/hr)	760	0	3852	4052	42320	185447	189499	189499	189499	190259	190259
Water/Liquids (lbs/hr)	180	0	1157	960	5248	24354	25315	25315	25315	25495	25495
Water Vapor (lbs/hr)											
Air/Gas (lbs/hr)											
Mass Flow (lbs/hr)	940	0	5009	5013	47568	209801	214813	214813	214813	215753	215753
Vol. Flow (gpm)											
Vol. Flow (scfm)											
Temperature (F)											

256

2038

MASS BALANCES

PIT 2

SK-F-03909 **WASTE RETRIEVAL (PIT 2)**

	101	102	103	104	105	106	107	108	109	110	111
COMPONENT	Dry Waste & Soil Removal	Wet Waste Removal	Large Debris Removal	Large Non-Proc Removal	Large Proc Removal	Wash Water Supply	Wash Water to Clearwell	Storm Water to Clearwell	Slurry to Tanker	Slurry to Dryer	Precip to Pits
Operating Time (hrs/day)	8	8	8	8	8	Intermittent	Intermittent	8	Intermittent	Intermittent	Intermittent
Operating Time (days/wk)	5	5	5	5	5			5			
Solids (lbs/hr)	1669	29151	437	219	219						
Water/Liquids (lbs/hr)	501	39617	584	292	292			6268			
Water Vapor (lbs/hr)											
Air/Gas (lbs/hr)											
Mass Flow (lbs/hr)	2171	68768	1021	511	511	0	0	6268	0	0	0
Vol. Flow (gpm)								12.5			
Volumetric Flow (scfm)											
Temperature (F)											

258

2038

SK-F-03910 **WASTE PREPARATION (PIT 2)**

COMPONENT	201 Drainage to Clearwell	202 Wet Waste Mixing	203 Dry Waste Mixing	204 Blended Waste to Grizzly	205 > 12" to Mechnical Segreg'n	206 Grizzly < 12" Undersize	207 Ferrous Removal	208 Metal Removal	209 Final Conveyor D'charge	210 Total to Debris Man.	211 Debris to Loadout	212 Derbies to Disposal	213 Waste to Shredder	214 10 Day Stg. to T. Auger	215 10 Day Stg. to Dryer	216 Dry Waste to Blending	217 Debris to Shredder	218 Shred'd Mat'l to Loadout
Operating Time (hrs/day)	16	16	16	16	16	16	16	16	16	16	8	8	16	24	24	16	8	8
Operating Time (days/wk)	5	5	5	5	5	5	5	5	5	5	5	5	5	7	7	5	5	5
Solids (lbs/hr)		14576	0	14576	146	14430	73	73	14284	292	120	40	14284	0	6802	835	641	641
Water/Liquids (lbs/hr)	350	19459	0	19459	195	19264	97	97	19069	389	161	54	19069	0	9081	251	856	856
Water Vapor (lbs/hr)																		
Air/Gas (lbs/hr)																		
Mass Flow (lbs/hr)	350	34034	0	34034	340	33694	170	170	33354	681	281	94	33354	0	15883	1085	1498	1498
Vol. Flow (gpm)	0.7																	
Vol. Flow (scfm)																		
Temperature (F)																		

NOTE: Stream 212 includes derbies, small and large pieces or uranium, crop tops, etc., along with the excess waste that is diverted with these materials during detection. In actuality, derbies are a small part of this stream.

Pit 2 Balance	SK-F-03911									
Stream No.	110	214	215	301	302	303	304	305	306	307
Component	SLURRY TO DRYER	10-DAY STG. TO T. AUGER	10-DAY STG. TO DRYER	AMBIENT AIR TO ECON'R	HOT SWEEP AIR	TOTAL AIR TO BURNERS	TOT. NAT GAS TO BURNERS	FURNACE OG TO ECON'R	FURNACE OG FROM ECON'R	COOLING AIR
Operating Time (hrs/day)	INTERMITTENT	24	24	24	24	24	24	24	24	24
Operating Time (days/wk)		7	7	7	7	7	7	7	7	7
Solids (Total) (lb/hr)		0	6802	0	0	0	0	0	0	0
Liquids (Total) (lb/hr)		0	9081	0	0	0	0	0	0	0
H2O (lb/hr)		0.0	9055.9	0	0	0	0	0	0	0
NaOH (lb/hr)				0	0	0	0	0	0	0
Other Salts (Total) (lb/hr)				0	0	0	0	0	0	0
Organics (lb/hr)		0.0	25.1	0.0	0.0	0.0	0.0	0.0	0.0	0.0
Gas (Total) (lb/hr)				3423	3423	33268	877	34145	34145	62223
H2O (lb/hr)				47	47	452	0	2357	2357	846
N2 (lb/hr)				2599	2599	25267	0	25267	25267	47258
Q2 (lb/hr)				777	777	7549	0	4088	4088	14118
NO2 (lb/hr)				0	0	0	0	0	0	0
CO2 (lb/hr)				0	0	0	0	2434	2434	0
HF (lb/hr)				0	0	0	0	0	0	0
NH3 (lb/hr)				0	0	0	0	0	0	0
Rn (pCi/L)				0	0	0	0	0	0	0
Other (lb/hr)				0	0	0	877	0	0	0
Total Mass Flow (lb/hr)		0	15883	3423	3423	33268	877	34145	34145	62223
Gas Flow (scfm)				757	757	7356	319	7690	7690	13757
Gas Flow (acfm)				781	1543	7598	328	20667	20017	14208
Temperature (F)				77	600	77	77	937	893	77
Pressure (in WC)										
Design Flow (acfm)										
Heat Content (BTU/hr)			745	54723	486458	531924	0	10316665	9884930	994887

260

2038

261

[redacted]

Pit 2 Balance								
Stream No.	308	309	310	311	312	313	314	315
Component	FURNACE OG TO FAN	FURNACE OG D'CHARGE	PROCESS WATER TO CLEAN	PROCESS OG TO CYCLONE	PROCESS OG TO SCRUBBER	CYCLONE SOLIDS	DRYER PRODUCT TO MIX	DRYER PRODUCT FROM MIX
Operating Time (hrs/day)	24	24	INTERMITTENT	24	24	24	24	24
Operating Time (days/wk)	7	7		7	7	7	7	7
Solids (Total) (lb/hr)	0	0		340	134	206	6458	6664
Liquids (Total) (lb/hr)	0	0		34	13	21	646	666
H2O (lb/hr)	0	0		32.9	13.0	20.0	625.8	645.8
NaOH (lb/hr)	0	0		0	0	0	0	0
Other Salts (Total) (lb/hr)	0	0		0	0	0	0	0
Organics (lb/hr)	0.0	0.0		1.1	0.4	0.6	20.0	20.6
Gas (Total) (lb/hr)	96369	96369		11828	11828	0	0	0
H2O (lb/hr)	3203	3203		8444	8444	0	0	0
N2 (lb/hr)	72526	72526		2599	2599	0	0	0
O2 (lb/hr)	18206	18206		777	777	0	0	0
NO2 (lb/hr)	0	0		3.294	3.294	0	0	0
CO2 (lb/hr)	2434	2434		0.001	0.001	0	0	0
HF (lb/hr)	0	0		0.000	0.000	0	0	0
NH3 (lb/hr)	0	0		0.001	0.001	0	0	0
Rn (pCi/L)	0	0		169	154	0	0	0
Other (lb/hr)	0	0		4.008	4.008	0	0	0
Total Mass Flow (lb/hr)	96369	96369		12202	11975	227	7104	7331
Gas Flow (scfm)	21447	21447		3705	3705	0	0	0
Gas Flow (acfm)	35479	35479		4736	5174	0	0	0
Temperature (F)	400	400		205	266	266	205	
Pressure (in WC)				405	399			
Design Flow (acfm)								
Heat Content (BTU/hr)	10879817	10879817		9461653	9736161	12533	259531	

Pit 2 Balance	SK-F-03956									
Stream No.	312	401	402	403	404	405	406	407	408	409
Component	OFFGAS TO SCRUBBER	OFFGAS TO CONDEN'R	OFFGAS TO REHEATER	CHILLED WATER TO CONDEN'R	CHILLED WTR. FROM CONDEN'R	OFFGAS TO MEPA	OFFGAS TO CARBN BEDS	OFFGAS TO HEPA FILTER	OFFGAS TO FAN	OFFGAS TO ATMOSPHE
Operating Time (hrs/day)	24	24	24	24	24	24	24	24	24	24
Operating Time (days/wk)	7	7	7	7	7	7	7	7	7	7
Solids (Total) (lb/hr)	134	3.2	3.2	0	0	3.2	0.9	0.9	0.0003	0.0003
Liquids (Total) (lb/hr)	13	0	0	988293	988293	0	0	0	0	0
H2O (lb/hr)	13.0	0.0	0.0	988293.4	988293.4	0.0	0.0	0.0	0.0	0.0
NaOH (lb/hr)	0	0.00	0.00	0.00	0.00	0.00	0.00	0.00	0.00	0.00
Other Salts (Total) (lb/hr)	0	0.00	0.00	0.00	0.00	0.00	0.00	0.00	0.00	0.00
Organics (lb/hr)	0.4	0.0	0.0	0.0	0.0	0.0	0.0	0.0	0.0	0.0
Gas (Total) (lb/hr)	11828	11322	3405	0	0	3405	3405	3405	3405	3405
H2O (lb/hr)	8444	7945	29	0	0	29	29	29	29	29
N2 (lb/hr)	2599	2599	2599	0	0	2599	2599	2599	2599	2599
O2 (lb/hr)	777	777	777	0	0	777	777	777	777	777
NO2 (lb/hr)	3	0.231	0.231	0.000	0.000	0.231	0.231	0.231	0.231	0.231
CO2 (lb/hr)	0	0.000	0.000	0.000	0.000	0.000	0.000	0.000	0.000	0.000
HF (lb/hr)	0	0.000	0.000	0.000	0.000	0.000	0.000	0.000	0.000	0.000
NH3 (lb/hr)	0	0.000	0.000	0.000	0.000	0.000	0.000	0.000	0.000	0.000
Rn (pCi/L)	154	180	1086	0	0	998	998	998	998	998
Other (lb/hr)	4	0	0	0	0	0	0	0.009	0.009	0.009
Total Mass Flow (lb/hr)	11975	11325	3408	988293	988293	3408	3406	3406	3405	3405
Gas Flow (scfm)	3705	3530	751	0	0	751	751	751	751	751
Gas Flow (acfm)	5174	4450	736	0	0	801	801	801	801	801
Liquid Flow (gpm)	0	0	0	1974	1974	0	0	0	0	0
Temperature (F)	266	195	50	42	51	95	95	95	95	95
Pressure (in WC)	399	367	363							
Design Flow (acfm)										
Heat Content (BTU/hr)	9736161	8857150	17842	-34136468	-25086058	48819	48811	48811	48807	48807

2038

263

[redacted]

Pit 2 Balance										
Stream No.	410	411	412	413	414	415	416	417	418	419
Component	TOTAL SCRUBBER D'CHARGE	VENTURI RECYCLE	PACKED TOWER RECYCLE	SCRUBBER BLEED	CONDENSA TO TRANS. TANK	WATER TO COLLECT. TANK	SCRUBBER WATER MAKEUP	SCRUBBER CAUSTIC SUPPLY	VENTURI OFFGAS	COND. TO RECYCLE TANK
Operating Time (hrs/day)	24	24	24	24	24	24	24	24	24	24
Operating Time (days/wk)	7	7	7	7	7	7	7	7	7	7
Solids (Total) (lb/hr)	292	126	35	131	0	131	0	0	5.4	0
Liquids (Total) (lb/hr)	28945	12500	3500	12945	7916	12945	12402	24	0	7916
H2O (lb/hr)	28902.0	12481.4	3494.8	12925.8	7916.4	12925.8	12402.0	11.9	0.0	7916.4
NaOH (lb/hr)	20.64	8.91	2.50	9.23	0.00	9	0.00	11.90	0.00	0.00
Other Salts (Total) (lb/hr)	12.66	5.47	1.53	5.66	0.00	6	0.00	0.00	0.00	0.00
Organics (lb/hr)	9.8	4.2	1.2	4.4	0.0	4.4	0.0	0.0	0.0	0.0
Gas (Total) (lb/hr)	0	0	0	0	0	0	0	0	11492	0
H2O (lb/hr)	0	0	0	0	0	0	0	0	8113	0
N2 (lb/hr)	0	0	0	0	0	0	0	0	2599	0
O2 (lb/hr)	0	0	0	0	0	0	0	0	777	0
NO2 (lb/hr)	0.000	0.000	0.000	0.000	0.000	0.000	0.000	0.000	2.305	0.000
CO2 (lb/hr)	0.000	0.000	0.000	0.000	0.000	0.000	0.000	0.000	0.000	0.000
HF (lb/hr)	0.000	0.000	0.000	0.000	0.000	0.000	0.000	0.000	0.000	0.000
NH3 (lb/hr)	0.000	0.000	0.000	0.000	0.000	0.000	0.000	0.000	0.000	0.000
Rn (pCi/L)	0	0	0	0	0	0	0	0	176	0
Other (lb/hr)	0.000	0.000	0.000	0.000	0.000	0.000	0.000	0.000	0.047	0.000
Total Mass Flow (lb/hr)	29076	12500	3500	13076	7916	13076	12402	24	11498	7916
Gas Flow (scfm)	0	0	0	0	0	0	0	0	3589	0
Gas Flow (acfm)	0	0	0	0	0	0	0	0	4535	0
Liquid Flow (gpm)	59	25	7	26	16	26	25	0.0	0	16
Temperature (F)	146	146	146	146	50	146	77	77	197	50
Pressure (in WC)									377	
Design Flow (acfm)										
Heat Content (BTU/hr)	1977314	852446	238685	886183	-211086	886183	0	-7	9049194	-211086

SK-F-03913 **DRIED WASTE BLENDING & LOADOUT** **(PIT 2)**

	211	215	216	218	315	501	502	503	504	505	506
COMPONENT	Debris to Loadout	10 Day Dryer Bypass	Dry Waste to Blending	From Debris Shredder	Dryer Product from Mix	Mixed Mat'l to Blending	Mixed Mat'l to Storage	Mixed Mat'l to Screen'g	Mixed Mat'l to Loading	Total to Decon	To Off-Site Disposal
Operating Time (hrs/day)	8	24	16	8	24	8	8	8	8	8	8
Operating Time (days/wk)	5	7	5	5	7	5	5	5	5	5	5
Solids (lbs/hr)	120	0	835	641	6664	29658	30300	30300	30300	30420	30420
Water/Liquids (lbs/hr)	161	0	251	856	667	3303	4159	4159	4159	4320	4320
Water Vapor (lbs/hr)											
Air/Gas (lbs/hr)											
Mass Flow (lbs/hr)	281	0	1085	1498	7331	32961	34459	34459	34459	34739	34739
Vol. Flow (gpm)											
Vol. Flow (scfm)											
Temperature (F)											

264

2038

MASS BALANCES

PIT 3

SK-F-03909 **WASTE RETRIEVAL (PIT 3)**

	101	102	103	104	105	106	107	108	109	110	111
COMPONENT	Dry Waste & Soil Removal	Wet Waste Removal	Large Debris Removal	Large Non-Proc Removal	Large Proc Removal	Wash Water Supply	Wash Water to Clearwell	Storm Water to Clearwell	Slurry to Tanker	Slurry to Dryer	Precip to Pits
Operating Time (hrs/day)	8	8	8	8	8	Intermittent	Intermittent	8	Intermittent	Intermittent	Intermittent
Operating Time (days/wk)	5	5	5	5	5			5			
Solids (lbs/hr)	10226	35874	538	269	269						
Water/Liquids (lbs/hr)	3072	45166	661	330	330			10188			
Water Vapor (lbs/hr)											
Air/Gas (lbs/hr)											
Mass Flow (lbs/hr)	13298	81040	1199	599	599	0	0	10188	0	0	0
Vol. Flow (gpm)								20.4			
Volumetric Flow (scfm)											
Temperature (F)											

266

2038

[redacted]

267

ERAFS1\VOL1:RSAPPS\RSDATA\
OU-1\PO-145\MASS-BAL.SHT

SK-F-03910 **WASTE PREPARATION (PIT 3)**

COMPONENT	201 Drainage to Clearwell	202 Wet Waste Mixing	203 Dry Waste Mixing	204 Blended Waste to Grizzly	205 > 12" to Mechncal Segreg'n	206 Grizzly < 12" Undersize	207 Ferrous Removal	208 Metal Removal	209 Final Conveyor D'charge	210 Total to Debris Man.	211 Debris to Loadout	212 Derbies to Disposal	213 Waste to Shredder	214 10 Day Stg. to T. Auger	215 10 Day Stg. to Dryer	216 Dry Waste to Blending	217 Debris to Shredder	218 Shred'd Mat'l to Loadout
Operating Time (hrs/day)	16	16	16	16	16	16	16	16	16	16	8	8	16	24	24	16	8	8
Operating Time (days/wk)	5	5	5	5	5	5	5	5	5	5	5	5	5	7	7	5	5	5
Solids (lbs/hr)		17937	0	17937	179	17758	90	90	17578	359	148	49	17578	924	7447	5113	789	789
Water/Liquids (lbs/hr)	556	22027	0	22027	220	21807	110	110	21586	441	182	61	21586	1135	9145	1536	969	969
Water Vapor (lbs/hr)																		
Air/Gas (lbs/hr)																		
Mass Flow (lbs/hr)	556	39964	0	39964	400	39564	200	200	39165	799	330	110	39165	2058	16591	6649	1758	1758
Vol. Flow (gpm)	1.1																	
Vol. Flow (scfm)																		
Temperature (F)																		

NOTE: Stream 212 includes derbies, small and large pieces or uranium, crop tops, etc., along with the excess waste that is diverted with these materials during detection. In actuality, derbies are a small part of this stream.

Pit 3 Balance	SK-F-03911									
Stream No.	110	214	215	301	302	303	304	305	306	307
Component	SLURRY TO DRYER	10-DAY STG. TO T. AUGER	10-DAY STG. TO DRYER	AMBIENT AIR TO ECON'R	HOT SWEEP AIR	TOTAL AIR TO BURNERS	TOT. NAT GAS TO BURNERS	FURNACE OG TO ECON'R	FURNACE OG FROM ECON'R	COOLING AIR
Operating Time (hrs/day)	INTERMITTENT	24	24	24	24	24	24	24	24	24
Operating Time (days/wk)		7	7	7	7	7	7	7	7	7
Solids (Total) (lb/hr)		924	7447	0	0	0	0	0	0	0
Liquids (Total) (lb/hr)		1135	9145	0	0	0	0	0	0	0
H2O (lb/hr)		1134.5	9144.7	0	0	0	0	0	0	0
NaOH (lb/hr)				0	0	0	0	0	0	0
Other Salts (Total) (lb/hr)				0	0	0	0	0	0	0
Organics (lb/hr)		0.0	0.3	0.0	0.0	0.0	0.0	0.0	0.0	0.0
Gas (Total) (lb/hr)				3421	3421	36346	959	37305	37305	74706
H2O (lb/hr)				47	47	494	0	2575	2575	1016
N2 (lb/hr)				2598	2598	27605	0	27605	27605	56739
O2 (lb/hr)				776	776	8247	0	4466	4466	16951
NO2 (lb/hr)				0	0	0	0	0	0	0
CO2 (lb/hr)				0	0	0	0	2659	2659	0
HF (lb/hr)				0	0	0	0	0	0	0
NH3 (lb/hr)				0	0	0	0	0	0	0
Rn (pCi/L)				0	0	0	0	0	0	0
Other (lb/hr).				0	0	0	959	0	0	0
Total Mass Flow (lb/hr)		2059	16592	3421	3421	36346	959	37305	37305	74706
Gas Flow (scfm)				756	756	8036	348	8401	8401	16517
Gas Flow (acfm)				781	1542	8299	359	23274	22628	17058
Temperature (F)				77	600	77	77	980	940	77
Pressure (in WC)										
Design Flow (acfm)										
Heat Content (BTU/hr)			496	54702	486270	581142	0	11735134	11303566	1194471

268

2038

Pit 3 Balance								
Stream No.	308	309	310	311	312	313	314	315
Component	FURNACE OG TO FAN	FURNACE OG D'CHARGE	PROCESS WATER TO CLEAN	PROCESS OG TO CYCLONE	PROCESS OG TO SCRUBBER	CYCLONE SOLIDS	DRYER PRODUCT TO MIX	DRYER PRODUCT FROM MIX
Operating Time (hrs/day)	24	24	INTERMITTENT	24	24	24	24	24
Operating Time (days/wk)	7	7		7	7	7	7	7
Solids (Total) (lb/hr)	0	0		372	155	217	7066	8207
Liquids (Total) (lb/hr)	0	0		37	16	22	707	1863
H2O (lb/hr)	0	0		37.2	15.5	21.7	706.8	1862.9
NaOH (lb/hr)	0	0		0	0	0	0	0
Other Salts (Total) (lb/hr)	0	0		0	0	0	0	0
Organics (lb/hr)	0.0	0.0		0.0	0.0	0.0	0.0	0.1
Gas (Total) (lb/hr)	112011	112011		11831	11831	0	0	0
H2O (lb/hr)	3591	3591		8447	8447	0	0	0
N2 (lb/hr)	84344	84344		2598	2598	0	0	0
O2 (lb/hr)	21416	21416		778	778	0	0	0
NO2 (lb/hr)	0	0		7.533	7.533	0	0	0
CO2 (lb/hr)	2659	2659		0.000	0.000	0	0	0
HF (lb/hr)	0	0		0.000	0.000	0	0	0
NH3 (lb/hr)	0	0		0.001	0.001	0	0	0
Rn (pCi/L)	0	0		67	66	0	0	0
Other (lb/hr)	0	0		0.285	0.285	0	0	0
Total Mass Flow (lb/hr)	112011	112011		12240	12002	239	7773	10070
Gas Flow (scfm)	24919	24919		3707	3707	0	0	0
Gas Flow (acfm)	41222	41222		5130	5177	0	0	0
Temperature (F)	400	400		259	266	266	259	
Pressure (in WC)				405	399			
Design Flow (acfm)								
Heat Content (BTU/hr)	12498037	12498037		9725131	9742061	13969	438737	

Pit 3 Balance	SK-F-03956									
Stream No.	312	401	402	403	404	405	406	407	408	409
Component	OFFGAS TO SCRUBBER	OFFGAS TO CONDEN'R	OFFGAS TO REHEATER	CHILLED WATER TO CONDEN'R	CHILLED WTR. FROM CONDEN'R	OFFGAS TO MEPA	OFFGAS TO CARBN BEDS	OFFGAS TO HEPA FILTER	OFFGAS TO FAN	OFFGAS TO ATMOSPHE
Operating Time (hrs/day)	24	24	24	24	24	24	24	24	24	24
Operating Time (days/wk)	7	7	7	7	7	7	7	7	7	7
Solids (Total) (lb/hr)	155	3.2	3.2	0	0	3.2	1.0	1.0	0.0003	0.0003
Liquids (Total) (lb/hr)	16	0	0	980870	980870	0	0	0	0	0
H2O (lb/hr)	15.5	0.0	0.0	980870.5	980870.5	0.0	0.0	0.0	0.0	[illegible]
NaOH (lb/hr)	0	0.00	0.00	0.00	0.00	0.00	0.00	0.00	0.00	0.00
Other Salts (Total) (lb/hr)	0	0.00	0.00	0.00	0.00	0.00	0.00	0.00	0.00	0.00
Organics (lb/hr)	0.0	0.0	0.0	0.0	0.0	0.0	0.0	0.0	0.0	0.0
Gas (Total) (lb/hr)	11831	11261	3404	0	0	3404	3404	3404	3404	3404
H2O (lb/hr)	8447	7885	29	0	0	29	29	29	29	29
N2 (lb/hr)	2598	2598	2598	0	0	2598	2598	2598	2598	2598
O2 (lb/hr)	778	776	776	0	0	776	776	776	776	776
NO2 (lb/hr)	8	0.527	0.527	0.000	0.000	0.527	0.527	0.527	0.527	0.527
CO2 (lb/hr)	0	0.000	0.000	0.000	0.000	0.000	0.000	0.000	0.000	0.000
HF (lb/hr)	0	0.000	0.000	0.000	0.000	0.000	0.000	0.000	0.000	0.000
NH3 (lb/hr)	0	0.000	0.000	0.000	0.000	0.000	0.000	0.000	0.000	0.000
Rn (pCi/L)	66	78	467	0	0	429	429	429	429	429
Other (lb/hr)	0	0	0	0	0	0	0	0.001	0.001	0.001
Total Mass Flow (lb/hr)	12002	11284	3407	980870	980870	3407	3405	3405	3404	3404
Gas Flow (scfm)	3707	3509	750	0	0	750	750	750	750	750
Gas Flow (acfm)	5177	4422	736	0	0	801	801	801	801	801
Liquid Flow (gpm)	0	0	0	1959	1960	0	0	0	0	0
Temperature (F)	266	195	50	42	51	95	95	95	95	95
Pressure (in WC)	399	367	363							
Design Flow (acfm)										
Heat Content (BTU/hr)	9742061	8790774	17834	-33880074	-24897640	48805	48796	48796	48792	48792

2038

Pit 3 Balance

Stream No.	410	411	412	413	414	415	416	417	418	419
Component	TOTAL SCRUBBER D'CHARGE	VENTURI RECYCLE	PACKED TOWER RECYCLE	SCRUBBER BLEED	CONDENSA TO TRANS. TANK	WATER TO COLLECT. TANK	SCRUBBER WATER MAKEUP	SCRUBBER CAUSTIC SUPPLY	VENTURI OFFGAS	COND. TO RECYCLE TANK
Operating Time (hrs/day)	24	24	24	24	24	24	24	24	24	24
Operating Time (days/wk)	7	7	7	7	7	7	7	7	7	7
Solids (Total) (lb/hr)	314	126	35	152	0	152	0	0	5.4	0
Liquids (Total) (lb/hr)	31037	12500	3500	15037	7857	15037	14400	52	0	7857
H2O (lb/hr)	30969.0	12472.5	3492.3	15004.2	7858.5	15004.2	14399.5	26.0	0.0	7858.5
NaOH (lb/hr)	41.01	16.52	4.63	19.87	0.00	20	0.00	25.96	0.00	0.00
Other Salts (Total) (lb/hr)	26.72	10.76	3.01	12.94	0.00	13	0.00	0.00	0.00	0.00
Organics (lb/hr)	0.5	0.2	0.1	0.3	0.0	0.3	0.0	0.0	0.0	0.0
Gas (Total) (lb/hr)	0	0	0	0	0	0	0	0	11445	0
H2O (lb/hr)	0	0	0	0	0	0	0	0	8064	0
N2 (lb/hr)	0	0	0	0	0	0	0	0	2598	0
O2 (lb/hr)	0	0	0	0	0	0	0	0	777	0
NO2 (lb/hr)	0.000	0.000	0.000	0.000	0.000	0.000	0.000	0.000	5.273	0.000
CO2 (lb/hr)	0.000	0.000	0.000	0.000	0.000	0.000	0.000	0.000	0.000	0.000
HF (lb/hr)	0.000	0.000	0.000	0.000	0.000	0.000	0.000	0.000	0.000	0.000
NH3 (lb/hr)	0.000	0.000	0.000	0.000	0.000	0.000	0.000	0.000	0.000	0.000
Rn (pCi/L)	0	0	0	0	0	0	0	0	76	0
Other (lb/hr)	0.000	0.000	0.000	0.000	0.000	0.000	0.000	0.000	0.029	0.000
Total Mass Flow (lb/hr)	31189	12500	3500	15189	7857	15189	14400	52	11451	[illegible]
Gas Flow (scfm)	0	0	0	0	0	0	0	0	3572	0
Gas Flow (acfm)	0	0	0	0	0	0	0	0	4513	0
Liquid Flow (gpm)	63	25	7	31	16	31	29	0.1	0	16
Temperature (F)	141	141	141	141	50	141	77	77	197	50
Pressure (in WC)									377	
Design Flow (acfm)										
Heat Content (BTU/hr)	1985633	797984	223436	964213	-209488	964213	0	-16	8994738	-209488

SK-F-03913 **DRIED WASTE BLENDING & LOADOUT** **(PIT 3)**

	211	215	216	218	315	501	502	503	504	505	506
COMPONENT	Debris to Loadout	10 Day Dryer Bypass	Dry Waste to Blending	From Debris Shredder	Dryer Product from Mix	Mixed Mat'l to Blending	Mixed Mat'l to Storage	Mixed Mat'l to Screen'g	Mixed Mat'l to Loading	Total to Decon	To Off-Site Disposal
Operating Time (hrs/day)	8	24	16	8	24	8	8	8	8	8	8
Operating Time (days/wk)	5	7	5	5	7	5	5	5	5	5	5
Solids (lbs/hr)	148	0	5113	789	8207	44695	45485	45485	45485	45632	45632
Water/Liquids (lbs/hr)	182	0	1536	969	1863	10896	11865	11865	11865	12047	12047
Water Vapor (lbs/hr)											
Air/Gas (lbs/hr)											
Mass Flow (lbs/hr)	330	0	6649	1758	10070	55591	57350	57350	57350	57679	57679
Vol. Flow (gpm)											
Vol. Flow (scfm)											
Temperature (F)											

272

2038

MASS BALANCES

PIT 4

SK-F-03909 **WASTE RETRIEVAL** **(PIT 4)**

	101	102	103	104	105	106	107	108	109	110	111
COMPONENT	Dry Waste & Soil Removal	Wet Waste Removal	Large Debris Removal	Large Non-Proc Removal	Large Proc Removal	Wash Water Supply	Wash Water to Clearwell	Storm Water to Clearwell	Slurry to Tanker	Slurry to Dryer	Precip to Pits
Operating Time (hrs/day)	8	8	8	8	8	Intermittent	Intermittent	8	Intermittent	Intermittent	Intermittent
Operating Time (days/wk)	5	5	5	5	5			5			
Solids (lbs/hr)	9131	199292	2989	1495	1495						
Water/Liquids (lbs/hr)	2743	43047	622	311	311			14947			
Water Vapor (lbs/hr)											
Air/Gas (lbs/hr)											
Mass Flow (lbs/hr)	11874	242340	3611	1806	1806			14947			
Mass Flow (gpm)								30			
Volumetric Flow (scfm)											
Temperature (F)											

274

2038

SK-F-03910 WASTE PREPARATION (PIT 4)

COMPONENT	201 Drainage to Clearwell	202 Wet Waste Mixing	203 Dry Waste Mixing	204 Blended Waste to Grizzly	205 > 12" to Mechncal Segreg'n	206 Grizzly < 12" Undersize	207 Ferrous Removal	208 Metal Removal	209 Final Conveyor D'charge	210 Total to Debris Man.	211 Debris to Loadout	212 Derbies to Disposal	213 Waste to Shredder	214 10 Day Stg. to T. Auger	215 10 Day Stg. to Dryer	216 Dry Waste to Blending	217 Debris to Shredder	218 Shred'd Mat'l to Loadout
Operating Time (hrs/day)	16	16	16	16	16	16	16	16	16	16	8	8	16	24	24	16	8	8
Operating Time (days/wk)	5	5	5	5	5	5	5	5	5	5	5	5	5	7	7	5	5	
Solids (lbs/hr)		99646	0	99646	996	98650	498	498	97653	1993	822	274	97653	10078	36424	4566	[illegible]	4384
Water/Liquids (lbs/hr)	797	20726	0	20726	207	20519	104	104	20312	415	171	57	20312	2096	7576	1371	912	912
Water Vapor (lbs/hr)																		
Air/Gas (lbs/hr)																		
Mass Flow (lbs/hr)	797	120373	0	120373	1204	119169	602	602	117965	2407	993	331	117965	12174	44000	5937	5296	5296
Mass Flow (gpm)	2																	
Vol. Flow (scfm)																		
Temperature (F)																		

NOTE: Stream 212 includes derbies, small and large pieces or uranium, crop tops, etc., along with the excess waste that is diverted with these materials during detection. In actuality, derbies are a small part of this stream.

Pit 4 Balance	SK-F-03911									
Stream No.	110	214	215	301	302	303	304	305	306	307
Component	SLURRY TO DRYER	10-DAY STG. TO T. AUGER	10-DAY STG. TO DRYER	AMBIENT AIR TO ECON'R	HOT SWEEP AIR	TOTAL AIR TO BURNERS	TOT. NAT GAS TO BURNERS	FURNACE OG TO ECON'R	FURNACE OG FROM ECON'R	COOLING AIR
Operating Time (hrs/day)	INTERMITTENT	24	24	24	24	24	24	24	24	24
Operating Time (days/wk)		7	7	7	7	7	7	7	7	7
Solids (Total) (lb/hr)		10078	36424	0	0	0	0	0	0	0
Liquids (Total) (lb/hr)		2096	7576	0	0	0	0	0	0	0
H2O (lb/hr)		2091.8	7560.5	0	0	0	0	0	0	0
NaOH (lb/hr)				0	0	0	0	0	0	0
Other Salts (Total) (lb/hr)				0	0	0	0	0	0	0
Organics (lb/hr)		4.3	15.5	0.0	0.0	0.0	0.0	0.0	0.0	0.0
Gas (Total) (lb/hr)				1546	1546	19644	518	20162	20162	27043
H2O (lb/hr)				21	21	267	0	1392	1392	368
N2 (lb/hr)				1174	1174	14920	0	14920	14920	20539
O2 (lb/hr)				351	351	4457	0	2414	2414	6136
NO2 (lb/hr)				0	0	0	0	0	0	0
CO2 (lb/hr)				0	0	0	0	1437	1437	0
HF (lb/hr)				0	0	0	0	0	0	0
NH3 (lb/hr)				0	0	0	0	0	0	0
Rn (pCi/L)				0	0	0	0	0	0	0
Other (lb/hr)				0	0	0	518	0	0	0
Total Mass Flow (lb/hr)		12174	44000	1546	1546	19644	518	20162	20162	27043
Gas Flow (scfm)				342	342	4343	188	4541	4541	5979
Gas Flow (acfm)				353	697	4485	194	11013	10715	6175
Temperature (F)				77	600	77	77	801	767	77
Pressure (in WC)										
Design Flow (acfm)										
Heat Content (BTU/hr)			2009	24720	219743	314089	0	5305045	5110022	432389

276

2038

877

Pit 4 Balance

Stream No.	308	309	310	311	312	313	314	315
Component	FURNACE OG TO FAN	FURNACE OG D'CHARGE	PROCESS WATER TO CLEAN	PROCESS OG TO CYCLONE	PROCESS OG TO SCRUBBER	CYCLONE SOLIDS	DRYER PRODUCT TO MIX	DRYER PRODUCT FROM MIX
Operating Time (hrs/day)	24	24	INTERMITTENT	24	24	24	24	24
Operating Time (days/wk)	7	7		7	7	7	7	7
Solids (Total) (lb/hr)	0	0		1817	1077	741	34529	45347
Liquids (Total) (lb/hr)	0	0		182	108	74	3453	5623
H2O (lb/hr)	0	0		181.0	107.2	73.8	3439.0	5604.6
NaOH (lb/hr)	0	0		0	0	0	0	0
Other Salts (Total) (lb/hr)	0	0		0	0	0	0	0
Organics (lb/hr)	0.0	0.0		0.7	0.4	0.3	14.2	18.8
Gas (Total) (lb/hr)	47205	47205		5565	5565	0	0	0
H2O (lb/hr)	1759	1759		3975	3975	0	0	0
N2 (lb/hr)	35459	35459		1174	1174	0	0	0
O2 (lb/hr)	8550	8550		351	351	0	0	0
NO2 (lb/hr)	0	0		0.000	0.000	0	0	0
CO2 (lb/hr)	1437	1437		40.984	40.984	0	0	0
HF (lb/hr)	0	0		8.215	8.215	0	0	0
NH3 (lb/hr)	0	0		15.860	15.860	0	0	0
Rn (pCi/L)	0	0		104	94	0	0	0
Other (lb/hr)	0	0		0.520	0.520	0	0	0
Total Mass Flow (lb/hr)	47205	47205		7564	6750	815	37982	50970
Gas Flow (scfm)	10520	10520		1744	1744	0	0	0
Gas Flow (acfm)	17403	17403		2209	2436	0	0	0
Temperature (F)	400	400		198	268	266	198	
Pressure (in WC)				405	399			
Design Flow (acfm)								
Heat Content (BTU/hr)	5542411	5542411		4499857	4641035	42095	1236757	

Pit 4 Balance	SK-F-03956									
Stream No.	312	401	402	403	404	405	406	407	408	409
Component	OFFGAS TO SCRUBBER	OFFGAS TO CONDEN'R	OFFGAS TO REHEATER	CHILLED WATER TO CONDEN'R	CHILLED WTR. FROM CONDEN'R	OFFGAS TO MEPA	OFFGAS TO CARBN BEDS	OFFGAS TO HEPA FILTER	OFFGAS TO FAN	OFFGAS TO ATMOSPHE
Operating Time (hrs/day)	24	24	24	24	24	24	24	24	24	24
Operating Time (days/wk)	7	7	7	7	7	7	7	7	7	7
Solids (Total) (lb/hr)	1077	21.9	21.9	0	0	21.9	6.2	6.2	0.0019	0.0019
Liquids (Total) (lb/hr)	108	0	0	403651	403651	0	0	0	0	0
H2O (lb/hr)	107.2	0.0	0.0	403651.3	403651.3	0.0	0.0	0.0	0.0	0.0
NaOH (lb/hr)	0	0.00	0.00	0.00	0.00	0.00	0.00	0.00	0.00	0.00
Other Salts (Total) (lb/hr)	0	0.00	0.00	0.00	0.00	0.00	0.00	0.00	0.00	0.00
Organics (lb/hr)	0.4	0.0	0.0	0.0	0.0	0.0	0.0	0.0	0.0	0.0
Gas (Total) (lb/hr)	5585	4769	1539	0	0	1539	1539	1539	1539	1539
H2O (lb/hr)	3975	3243	13	0	0	13	13	13	13	13
N2 (lb/hr)	1174	1174	1174	0	0	1174	1174	1174	1174	1174
O2 (lb/hr)	351	351	351	0	0	351	351	354	351	351
NO2 (lb/hr)	0	0.000	0.000	0.000	0.000	0.000	0.000	0.000	0.000	0.000
CO2 (lb/hr)	41	0.820	0.820	0.000	0.000	0.820	0.820	0.820	0.820	0.820
HF (lb/hr)	8	0.041	0.041	0.000	0.000	0.041	0.041	0.041	0.041	0.041
NH3 (lb/hr)	18	0.000	0.000	0.000	0.000	0.000	0.000	0.000	0.000	0.000
Rn (pCi/L)	94	123	687	0	0	632	632	632	632	632
Other (lb/hr)	1	0	0	0	0	0	0	0.012	0.012	0.012
Total Mass Flow (lb/hr)	6750	4791	1561	403651	403651	1561	1545	1545	1539	1539
Gas Flow (scfm)	1744	1473	339	0	0	339	339	339	339	339
Gas Flow (acfm)	2436	1855	333	0	0	362	362	362	362	362
Liquid Flow (gpm)	0	0	0	806	806	0	0	0	0	0
Temperature (F)	266	195	50	42	51	95	95	95	95	95
Pressure (in WC)	399	367	363							
Design Flow (acfm)										
Heat Content (BTU/hr)	4641035	3618296	7965	-13942448	-10245965	22130	22077	22077	22056	22056

278

2038

Pit 4 Balance

Stream No.	410	411	412	413	414	415	416	417	418	419
Component	TOTAL SCRUBBER D'CHARGE	VENTURI RECYCLE	PACKED TOWER RECYCLE	SCRUBBER BLEED	CONDENSA TO TRANS. TANK	WATER TO COLLECT. TANK	SCRUBBER WATER MAKEUP	SCRUBBER CAUSTIC SUPPLY	VENTURI OFFGAS	COND. TO RECYCLE TANK
Operating Time (hrs/day)	24	24	24	24	24	24	24	24	24	24
Operating Time (days/wk)	7	7	7	7	7	7	7	7	7	7
Solids (Total) (lb/hr)	1897	658	184	1055	0	1055	0	0	37.9	0
Liquids (Total) (lb/hr)	36043	12500	3500	20043	3230	20043	18559	580	0	3230
H2O (lb/hr)	35447.3	12293.5	3442.2	19711.6	3230.1	19711.6	18559.2	290.0	0.0	3230.1
NaOH (lb/hr)	360.78	125.12	35.03	200.62	0.00	201	0.00	289.97	0.00	0.00
Other Salts (Total) (lb/hr)	233.31	80.92	22.66	129.74	0.00	130	0.00	0.00	0.00	0.00
Organics (lb/hr)	1.4	0.5	0.1	0.8	0.1	0.8	0.0	0.0	0.0	0.1
Gas (Total) (lb/hr)	0	0	0	0	0	0	0	0	4970	0
H2O (lb/hr)	0	0	0	0	0	0	0	0	3428	0
N2 (lb/hr)	0	0	0	0	0	0	0	0	1174	0
O2 (lb/hr)	0	0	0	0	0	0	0	0	351	0
NO2 (lb/hr)	0.000	0.000	0.000	0.000	0.000	0.000	0.000	0.000	0.000	0.000
CO2 (lb/hr)	0.000	0.000	0.000	0.000	0.000	0.000	0.000	0.000	16.394	0.000
HF (lb/hr)	0.000	0.000	0.000	0.000	0.000	0.000	0.000	0.000	0.821	0.000
NH3 (lb/hr)	0.000	0.000	0.000	0.000	0.000	0.000	0.000	0.000	0.000	0.000
Rn (pCi/L)	0	0	0	0	0	0	0	0	118	0
Other (lb/hr)	0.000	0.000	0.000	0.000	0.000	0.000	0.000	0.000	0.180	0.000
Total Mass Flow (lb/hr)	37098	12500	3500	21098	3230	21098	18559	580	5008	3230
Gas Flow (scfm)	0	0	0	0	0	0	0	0	1540	0
Gas Flow (acfm)	0	0	0	0	0	0	0	0	1945	0
Liquid Flow (gpm)	72	25	7	40	6	40	37	0.8	0	6
Temperature (F)	133	133	133	134	50	134	77	77	196	50
Pressure (in WC)									377	
Design Flow (acfm)										
Heat Content (BTU/hr)	2031201	695943	194864	1140394	-86129	1140394	0	-183	3826193	-86129

SK-F-03913 **DRIED WASTE BLENDING & LOADOUT** (PIT 4)

COMPONENT	211 Debris to Loadout	215 10 Day Dryer Bypass	216 Dry Waste to Blending	218 From Debris Shredder	315 Dryer Product from Mix	501 Mixed Mat'l to Blending	502 Mixed Mat'l to Storage	503 Mixed Mat'l to Screen'g	504 Mixed Mat'l to Loading	505 Total to Decon	506 To Off-Site Disposal
Operating Time (hrs/day)	8	24	16	8	24	8	8	8	8	8	8
Operating Time (days/wk)	5	7	5	5	7	5	5	5	5	5	5
Solids (lbs/hr)	822	0	4566	4384	45347	199588	203973	203973	203973	204795	204795
Water/Liquids (lbs/hr)	171	0	1371	912	5623	26360	27272	27272	27272	27443	27443
Water Vapor (lbs/hr)											
Air/Gas (lbs/hr)											
Mass Flow (lbs/hr)	993	0	5937	5296	50970	225948	231244	231244	231244	232237	232237
Mass Flow (gpm)											
Vol. Flow (scfm)											
Temperature (F)											

2038

MASS BALANCES

PIT 5

SK-F-03909 **WASTE RETRIEVAL** **PIT 5**

	101	102	103	104	105	106	107	108	109	110	111
COMPONENT	Dry Waste & Soil Removal	Wet Waste Removal	Large Debris Removal	Large Non-Proc Removal	Large Proc Removal	Wash Water Supply	Wash Water to Clearwell	Storm Water to Clearwell	Slurry to Tanker	Slurry to Dryer	Precip to Pits
Operating Time (hrs/day)	8	8	8	8	8	Intermittent	Intermittent	8	Intermittent	Intermittent	Intermittent
Operating Time (days/wk)	5	5	5	5	5			5			
Solids (lbs/hr)	29326	11976	420	210	210						
Water/Liquids (lbs/hr)	8809	38216	630	315	315			9138			
Water Vapor (lbs/hr)											
Air/Gas (lbs/hr)											
Mass Flow (lbs/hr)	38135	50192	1050	525	525	0	0	9138	0	0	0
Vol. Flow (gpm)								18.3			
Vol. Flow (scfm)											
Temperature (F)											

282

2038

263

[redacted]

ERAFS1\VOL1:RSAPPS\RSDATA\
OU-1\PO-145\MASS-BAL.SHT

SK-F-03910 **WASTE PREPARATION PIT 5**

COMPONENT	201 Drainage to Clearwell	202 Wet Waste Mixing	203 Dry Waste Mixing	204 Blended Waste to Grizzly	205 >12" to Mechanical Segreg'n	206 Grizzly <12" Undersize	207 Ferrous Removal	208 Metal Removal	209 Final Conveyor D'charge	210 Total to Debris Man.	211 Debris to Loadout	212 Derbies to Disposal	213 Waste to Shredder	214 10 Day Stg. to T. Auger	215 10 Day Stg. to Dryer	216 Dry Waste to Blending	217 Debris to Shredder	218 Shred'd Mat'l to Loadout
Operating Time (hrs/day)	16	16	16	16	16	16	16	16	16	16	8	8	16	24	24	16	8	8
Operating Time (days/wk)	5	5	5	5	5	5	5	5	5	5	5	5	5	7	7	5	5	5
Solids (lbs/hr)		5988	8017	14005	140	13865	70	70	13725	280	116	39	13725	535	6000	6646	616	616
Water/Liquids (lbs/hr)	509	18599	2408	21007	210	20797	105	105	20587	420	173	58	20587	803	9000	1997	924	924
Water Vapor (lbs/hr)																		
Air/Gas (lbs/hr)																		
Mass Flow (lbs/hr)	509	24587	10425	35012	350	34661	175	175	34311	700	289	96	34311	1339	15000	8643	1541	1541
Vol. Flow (gpm)	1.0																	
Vol. Flow (scfm)																		
Temperature (F)																		

NOTE: Stream 212 includes derbies, small and large pieces or uranium, crop tops, etc., along with the excess waste that is diverted with these materials during detection. In actuality, derbies are a small part of this stream.

Pit 5 Balance	SK-F-03911									
Stream No.	110	214	215	301	302	303	304	305	306	307
Component	SLURRY TO DRYER	10-DAY STG. TO T. AUGER	10-DAY STG. TO DRYER	AMBIENT AIR TO ECON'R	HOT SWEEP AIR	TOTAL AIR TO BURNERS	TOT. NAT GAS TO BURNERS	FURNACE OG TO ECON'R	FURNACE OG FROM ECON'R	COOLING AIR
Operating Time (hrs/day)	INTERMITTENT	24	24	24	24	24	24	24	24	24
Operating Time (days/wk)		7	7	7	7	7	7	7	7	7
Solids (Total) (lb/hr)		536	6000	0	0	0	0	0	0	0
Liquids (Total) (lb/hr)		803	9000	0	0	0	0	0	0	0
H2O (lb/hr)		803.2	8999.9	0	0	0	0	0	0	0
NaOH (lb/hr)				0	0	0	0	0	0	0
Other Salts (Total) (lb/hr)				0	0	0	0	0	0	0
Organics (lb/hr)		0.0	0.1	0.0	0.0	0.0	0.0	0.0	0.0	0.0
Gas (Total) (lb/hr)				3425	3425	33684	888	34573	34573	62246
H2O (lb/hr)				47	47	458	0	2388	2388	847
N2 (lb/hr)				2602	2602	25583	0	25583	25583	47278
O2 (lb/hr)				777	777	7643	0	4139	4139	14124
NO2 (lb/hr)				0	0	0	0	0	0	0
CO2 (lb/hr)				0	0	0	0	2465	2465	0
HF (lb/hr)				0	0	0	0	0	0	0
NH3 (lb/hr)				0	0	0	0	0	0	0
Rn (pCi/L)				0	0	0	0	0	0	0
Other (lb/hr)				0	0	0	888	0	0	0
Total Mass Flow (lb/hr)		1339	15000	3425	3425	33684	888	34573	34573	62246
Gas Flow (scfm)				757	757	7448	323	7786	7786	13763
Gas Flow (acfm)				782	1544	7691	333	20833	20182	14213
Temperature (F)				77	600	77	77	931	887	77
Pressure (in WC)										
Design Flow (acfm)										
Heat Content (BTU/hr)			-751	54767	486848	538579	0	10384088	9952007	995257

284

2038

285

[redacted]

Pit 5 Balance								
Stream No.	308	309	310	311	312	313	314	315
Component	FURNACE OG TO FAN	FURNACE OG D'CHARGE	PROCESS WATER TO CLEAN	PROCESS OG TO CYCLONE	PROCESS OG TO SCRUBBER	CYCLONE SOLIDS	DRYER PRODUCT TO MIX	DRYER PRODUCT FROM MIX
Operating Time (hrs/day)	24	24	INTERMITTENT	24	24	24	24	24
Operating Time (days/wk)	7	7		7	7	7	7	7
Solids (Total) (lb/hr)	0	0		300	123	177	5698	6410
Liquids (Total) (lb/hr)	0	0		30	12	18	570	1391
H2O (lb/hr)	0	0		30.0	12.3	17.7	569.7	1390.6
NaOH (lb/hr)	0	0		0	0	0	0	0
Other Salts (Total) (lb/hr)	0	0		0	0	0	0	0
Organics (lb/hr)	0.0	0.0		0.0	0.0	0.0	0.0	0.0
Gas (Total) (lb/hr)	96819	96819		11828	11828	0	0	0
H2O (lb/hr)	3233	3233		8447	8447	0	0	0
N2 (lb/hr)	72859	72859		2602	2602	0	0	0
O2 (lb/hr)	18262	18262		778	778	0	0	0
NO2 (lb/hr)	0	0		2.177	2.177	0	0	0
CO2 (lb/hr)	2465	2465		0.001	0.001	0	0	0
HF (lb/hr)	0	0		0.020	0.020	0	0	0
NH3 (lb/hr)	0	0		0.000	0.000	0	0	0
Rn (pCi/L)	0	0		13	13	0	0	0
Other (lb/hr)	0	0		0.081	0.081	0	0	0
Total Mass Flow (lb/hr)	96819	96819		12158	11963	195	6267	7801
Gas Flow (scfm)	21549	21549		3707	3707	0	0	0
Gas Flow (acfm)	35647	35647		5082	5176	0	0	0
Temperature (F)	400	400		253	266	266	253	
Pressure (in WC)				405	399			
Design Flow (acfm)								
Heat Content (BTU/hr)	10947264	10947264		9687709	9738866	10676	317648	

Pit 5 Balance	SK-F-03956									
Stream No.	312	401	402	403	404	405	406	407	408	409
Component	OFFGAS TO SCRUBBER	OFFGAS TO CONDEN'R	OFFGAS TO REHEATER	CHILLED WATER TO CONDEN'R	CHILLED WTR. FROM CONDEN'R	OFFGAS TO MEPA	OFFGAS TO CARBN BEDS	OFFGAS TO HEPA FILTER	OFFGAS TO FAN	OFFGAS TO ATMOSPHE
Operating Time (hrs/day)	24	24	24	24	24	24	24	24	24	24
Operating Time (days/wk)	7	7	7	7	7	7	7	7	7	7
Solids (Total) (lb/hr)	123	2.3	2.3	0	0	2.3	0.7	0.7	0.0002	0.0002
Liquids (Total) (lb/hr)	12	0	0	992915	992915	0	0	0	0	0
H2O (lb/hr)	12.3	0.0	0.0	992915.0	992915.0	0.0	0.0	0.0	0.0	0.0
NaOH (lb/hr)	0	0.00	0.00	0.00	0.00	0.00	0.00	0.00	0.00	0.00
Other Salts (Total) (lb/hr)	0	0.00	0.00	0.00	0.00	0.00	0.00	0.00	0.00	0.00
Organics (lb/hr)	0.0	0.0	0.0	0.0	0.0	0.0	0.0	0.0	0.0	0.0
Gas (Total) (lb/hr)	11828	11362	3408	0	0	3408	3408	3408	3408	3408
H2O (lb/hr)	8447	7983	29	0	0	29	29	29	29	29
N2 (lb/hr)	2602	2602	2602	0	0	2602	2602	2602	2602	2602
O2 (lb/hr)	778	777	777	0	0	777	777	777	777	777
NO2 (lb/hr)	2	0.152	0.152	0.000	0.000	0.152	0.152	0.152	0.152	0.152
CO2 (lb/hr)	0	0.000	0.000	0.000	0.000	0.000	0.000	0.000	0.000	0.000
HF (lb/hr)	0	0.000	0.000	0.000	0.000	0.000	0.000	0.000	0.000	0.000
NH3 (lb/hr)	0	0.000	0.000	0.000	0.000	0.000	0.000	0.000	0.000	0.000
Rn (pCi/L)	13	15	93	0	0	85	85	85	85	85
Other (lb/hr)	0	0	0	0	0	0	0	0.001	0.001	0.001
Total Mass Flow (lb/hr)	11963	11364	3410	992915	992915	3410	3409	3409	3408	3408
Gas Flow (scfm)	3707	3544	751	0	0	751	751	751	751	751
Gas Flow (acfm)	5176	4467	737	0	0	802	802	802	802	802
Liquid Flow (gpm)	0	0	0	1983	1984	0	0	0	0	0
Temperature (F)	266	195	50	42	51	95	95	95	95	95
Pressure (in WC)	399	367	363							
Design Flow (acfm)										
Heat Content (BTU/hr)	9738868	8898509	17861	-34296100	-25203368	48853	48848	48848	48846	48846

2038

25

287

[redacted]

Pit 5 Balance

Stream No.	410	411	412	413	414	415	416	417	418	419
Component	TOTAL SCRUBBER D'CHARGE	VENTURI RECYCLE	PACKED TOWER RECYCLE	SCRUBBER BLEED	CONDENSA TO TRANS. TANK	WATER TO COLLECT. TANK	SCRUBBER WATER MAKEUP	SCRUBBER CAUSTIC SUPPLY	VENTURI OFFGAS	COND. TO RECYCLE TANK
Operating Time (hrs/day)	24	24	24	24	24	24	24	24	24	24
Operating Time (days/wk)	7	7	7	7	7	7	7	7	7	7
Solids (Total) (lb/hr)	282	126	35	120	0	120	0	0	3.9	0
Liquids (Total) (lb/hr)	27916	12500	3500	11916	7954	11916	11422	16	0	7954
H2O (lb/hr)	27893.1	12489.6	3497.1	11906.5	7953.7	11906.5	11421.8	7.9	0.0	7953.7
NaOH (lb/hr)	14.24	6.37	1.78	6.08	0.00	6	0.00	7.88	0.00	0.00
Other Salts (Total) (lb/hr)	8.87	3.97	1.11	3.78	0.00	4	0.00	0.00	0.00	0.00
Organics (lb/hr)	0.1	0.1	0.0	0.1	0.0	0.1	0.0	0.0	0.0	0.0
Gas (Total) (lb/hr)	0	0	0	0	0	0	0	0	11524	0
H2O (lb/hr)	0	0	0	0	0	0	0	0	8144	0
N2 (lb/hr)	0	0	0	0	0	0	0	0	2602	0
O2 (lb/hr)	0	0	0	0	0	0	0	0	727	0
NO2 (lb/hr)	0.000	0.000	0.000	0.000	0.000	0.000	0.000	0.000	1.524	0.000
CO2 (lb/hr)	0.000	0.000	0.000	0.000	0.000	0.000	0.000	0.000	0.000	0.000
HF (lb/hr)	0.000	0.000	0.000	0.000	0.000	0.000	0.000	0.000	0.002	0.000
NH3 (lb/hr)	0.000	0.000	0.000	0.000	0.000	0.000	0.000	0.000	0.000	0.000
Rn (pCi/L)	0	0	0	0	0	0	0	0	15	0
Other (lb/hr)	0.000	0.000	0.000	0.000	0.000	0.000	0.000	0.000	0.022	0.000
Total Mass Flow (lb/hr)	28037	12500	3500	12037	7954	12037	11422	16	11528	7954
Gas Flow (scfm)	0	0	0	0	0	0	0	0	3800	0
Gas Flow (acfm)	0	0	0	0	0	0	0	0	4549	0
Liquid Flow (gpm)	57	25	7	24	16	24	23	0.0	0	16
Temperature (F)	148	148	148	148	50	148	77	77	197	50
Pressure (in WC)									377	
Design Flow (acfm)										
Heat Content (BTU/hr)	1973493	882313	247048	844132	-212080	844132	0	-5	9082764	-212080

SK-F-03913

DRIED WASTE BLENDING & LOADOUT

PIT 5

COMPONENT	211 Debris to Loadout	215 10 Day Dryer Bypass	216 Dry Waste to Blending	218 From Debris Shredder	315 Dryer Product from Mix	501 Mixed Mat'l to Blending	502 Mixed Mat'l to Storage	503 Mixed Mat'l to Screen'g	504 Mixed Mat'l to Loading	505 Total to Decon	506 To Off-Site Disposal
Operating Time (hrs/day)	8	24	16	8	24	8	8	8	8	8	8
Operating Time (days/wk)	5	7	5	5	7	5	5	5	5	5	5
Solids (lbs/hr)	116	0	6646	616	6410	40215	40831	40831	40831	40946	40946
Water/Liquids (lbs/hr)	173	0	1997	924	1391	9835	10759	10759	10759	10933	10933
Water Vapor (lbs/hr)											
Air/Gas (lbs/hr)											
Mass Flow (lbs/hr)	289	0	8643	1541	7801	50050	51590	51590	51590	51879	51879
Vol. Flow (gpm)											
Vol. Flow (scfm)											
Temperature (F)											

2038

MASS BALANCES

PIT 6

SK-F-03909 **WASTE RETRIEVAL (PIT 6)**

COMPONENT	101 Dry Waste & Soil Removal	102 Wet Waste Removal	103 Large Debris Removal	104 Large Non-Proc Removal	105 Large Proc Removal	106 Wash Water Supply	107 Wash Water to Clearwell	108 Storm Water to Clearwell	109 Slurry to Tanker	110 Slurry to Dryer	111 Precip to Pits
Operating Time (hrs/day)	8	8	8	8	8	Intermittent	Intermittent	8	Intermittent	Intermittent	Intermittent
Operating Time (days/wk)	5	5	5	5	5			5			
Solids (lbs/hr)	768	161726	2426	1213	1213						
Water/Liquids (lbs/hr)	231	28625	403	201	201			15687			
Water Vapor (lbs/hr)											
Air/Gas (lbs/hr)											
Mass Flow (lbs/hr)	999	190351	2829	1414	1414	0	0	15687	0	0	0
Vol. Flow (gpm)								31.3			
Vol. Flow (scfm)											
Temperature (F)											

290

2038

225

SK-F-03910 **WASTE PREPARATION (PIT 6)**

COMPONENT	201 Drainage to Clearwell	202 Wet Waste Mixing	203 Dry Waste Mixing	204 Blended Waste to Grizzly	205 > 12" to Mechncal Segreg'n	206 Grizzly < 12" Undersize	207 Ferrous Removal	208 Metal Removal	209 Final Conveyor D'charge	210 Total to Debris Man.	211 Debris to Loadout	212 Derbies to Disposal	213 Waste to Shredder	214 10 Day Stg. to T. Auger	215 10 Day Stg. to Dryer	216 Dry Waste to Blending	217 Debris to Shredder	218 Shred'd Mat'l to Loadout
Operating Time (hrs/day)	16	16	16	16	16	16	16	16	16	16	8	8	16	24	24	16	8	8
Operating Time (days/wk)	5	5	5	5	5	5	5	5	5	5	5	5	5	7	7	5	5	5
Solids (lbs/hr)		80863	0	80863	809	80054	404	404	79246	1617	667	222	79246	0	37736	384	3558	3558
Water/Liquids (lbs/hr)	889	13423	0	13423	134	13289	67	67	13155	268	111	37	13155	0	6264	115	591	591
Water Vapor (lbs/hr)																		
Air/Gas (lbs/hr)																		
Mass Flow (lbs/hr)	889	94286	0	94286	943	93343	471	471	92400	1886	778	259	92400	0	44000	500	4149	4149
Vol. Flow (gpm)	1.8																	
Vol. Flow (scfm)																		
Temperature (F)																		

NOTE: Stream 212 includes derbies, small and large pieces or uranium, crop tops, etc., along with the excess waste that is diverted with these materials during detection. In actuality, derbies are a small part of this stream.

Pit 6 Balance	SK-F-03911									
Stream No.	110	214	215	301	302	303	304	305	306	307
Component	SLURRY TO DRYER	10-DAY STG. TO T. AUGER	10-DAY STG. TO DRYER	AMBIENT AIR TO ECON'R	HOT SWEEP AIR	TOTAL AIR TO BURNERS	TOT. NAT GAS TO BURNERS	FURNACE OG TO ECON'R	FURNACE OG FROM ECON'R	COOLING AIR
Operating Time (hrs/day)	INTERMITTENT	24	24	24	24	24	24	24	24	24
Operating Time (days/wk)		7	7	7	7	7	7	7	7	7
Solids (Total) (lb/hr)		0	37736	0	0	0	0	0	0	0
Liquids (Total) (lb/hr)		0	6264	0	0	0	0	0	0	0
H2O (lb/hr)		0.0	6257.9	0	0	0	0	0	0	0
NaOH (lb/hr)				0	0	0	0	0	0	0
Other Salts (Total) (lb/hr)				0	0	0	0	0	0	0
Organics (lb/hr)		0.0	6.1	0.0	0.0	0.0	0.0	0.0	0.0	0.0
Gas (Total) (lb/hr)				947	947	12365	326	12691	12691	9054
H2O (lb/hr)				13	13	168	0	876	876	123
N2 (lb/hr)				719	719	9391	0	9391	9391	6876
O2 (lb/hr)				215	215	2806	0	1519	1519	2054
NO2 (lb/hr)				0	0	0	0	0	0	0
CO2 (lb/hr)				0	0	0	0	905	905	0
HF (lb/hr)				0	0	0	0	0	0	0
NH3 (lb/hr)				0	0	0	0	0	0	0
Rn (pCi/L)				0	0	0	0	0	0	0
Other (lb/hr)				0	0	0	326	0	0	0
Total Mass Flow (lb/hr)		0	44000	947	947	12365	326	12691	12691	9054
Gas Flow (scfm)				209	209	2734	118	2858	2858	2002
Gas Flow (acfm)				216	427	2823	122	6005	5818	2067
Temperature (F)				77	600	77	77	632	598	77
Pressure (in WC)										
Design Flow (acfm)										
Heat Content (BTU/hr)			-307	15135	134545	197706	0	2738788	2619378	144761

2038

293

Pit 6 Balance

Stream No.	308	309	310	311	312	313	314	315
Component	FURNACE OG TO FAN	FURNACE OG D'CHARGE	PROCESS WATER TO CLEAN	PROCESS OG TO CYCLONE	PROCESS OG TO SCRUBBER	CYCLONE SOLIDS	DRYER PRODUCT TO MIX	DRYER PRODUCT FROM MIX
Operating Time (hrs/day)	24	24	INTERMITTENT	24	24	24	24	24
Operating Time (days/wk)	7	7		7	7	7	7	7
Solids (Total) (lb/hr)	0	0		1883	598	1285	35780	37065
Liquids (Total) (lb/hr)	0	0		188	60	129	3579	3707
H2O (lb/hr)	0	0		188.2	59.7	128.4	3575.1	3703.5
NaOH (lb/hr)	0	0		0	0	0	0	0
Other Salts (Total) (lb/hr)	0	0		0	0	0	0	0
Organics (lb/hr)	0.0	0.0		0.2	0.1	0.1	3.8	4.0
Gas (Total) (lb/hr)	21745	21745		3516	3516	0	0	0
H2O (lb/hr)	999	999		2500	2500	0	0	0
N2 (lb/hr)	16268	16268		719	719	0	0	0
O2 (lb/hr)	3574	3574		224	224	0	0	0
NO2 (lb/hr)	0	0		54.310	54.310	0	0	0
CO2 (lb/hr)	905	905		0.001	0.001	0	0	0
HF (lb/hr)	0	0		16.541	16.541	0	0	0
NH3 (lb/hr)	0	0		0.001	0.001	0	0	0
Rn (pCi/L)	0	0		28	28	0	0	0
Other (lb/hr)	0	0		2.060	2.060	0	0	0
Total Mass Flow (lb/hr)	21745	21745		5588	4174	1414	39359	40773
Gas Flow (scfm)	4860	4860		1097	1097	0	0	0
Gas Flow (acfm)	8040	8040		1393	1532	0	0	0
Temperature (F)	400	400		200	266	266	200	
Pressure (in WC)				405	399			
Design Flow (acfm)								
Heat Content (BTU/hr)	2764140	2764140		2861872	2915415	74076	1324679	

Pit 6 Balance	SK-F-03956									
Stream No.	312	401	402	403	404	405	406	407	408	409
Component	OFFGAS TO SCRUBBER	OFFGAS TO CONDEN'R	OFFGAS TO REHEATER	CHILLED WATER TO CONDEN'R	CHILLED WTR. FROM CONDEN'R	OFFGAS TO MEPA	OFFGAS TO CARBN BEDS	OFFGAS TO HEPA FILTER	OFFGAS TO FAN	OFFGAS TO ATMOSPHE
Operating Time (hrs/day)	24	24	24	24	24	24	24	24	24	24
Operating Time (days/wk)	7	7	7	7	7	7	7	7	7	7
Solids (Total) (lb/hr)	598	12.3	12.3	0	0	12.3	3.1	3.1	0.0009	0.0009
Liquids (Total) (lb/hr)	60	0	0	250016	250016	0	0	0	0	0
H2O (lb/hr)	59.7	0.0	0.0	250015.8	250015.8	0.0	0.0	0.0	0.0	0.0
NaOH (lb/hr)	0	0.00	0.00	0.00	0.00	0.00	0.00	0.00	0.00	0.00
Other Salts (Total) (lb/hr)	0	0.00	0.00	0.00	0.00	0.00	0.00	0.00	0.00	0.00
Organics (lb/hr)	0.1	0.0	0.0	0.0	0.0	0.0	0.0	0.0	0.0	0.0
Gas (Total) (lb/hr)	3516	2947	946	0	0	946	946	946	946	946
H2O (lb/hr)	2500	2009	8	0	0	8	8	8	8	8
N2 (lb/hr)	719	719	719	0	0	719	719	719	719	719
O2 (lb/hr)	224	215	215	0	0	215	215	215	215	215
NO2 (lb/hr)	54	3.802	3.802	0.000	0.000	3.802	3.802	3.802	3.802	3.802
CO2 (lb/hr)	0	0.000	0.000	0.000	0.000	0.000	0.000	0.000	0.000	0.000
HF (lb/hr)	17	0.083	0.083	0.000	0.000	0.083	0.083	0.083	0.083	0.083
NH3 (lb/hr)	0	0.000	0.000	0.000	0.000	0.000	0.000	0.000	0.000	0.000
Rn (pCi/L)	26	34	193	0	0	178	178	178	178	178
Other (lb/hr)	2	0	0	0	0	0	0	0.011	0.011	0.011
Total Mass Flow (lb/hr)	4174	2960	959	250016	250016	959	949	949	946	946
Gas Flow (scfm)	1097	911	208	0	0	208	208	208	208	208
Gas Flow (acfm)	1532	1147	204	0	0	222	222	222	222	222
Liquid Flow (gpm)	0	0	0	499	499	0	0	0	0	0
Temperature (F)	266	195	50	42	51	95	95	95	95	95
Pressure (in WC)	399	367	363							
Design Flow (acfm)										
Heat Content (BTU/hr)	2915415	2241039	4887	-8635750	-6346202	13586	13555	13555	13544	13544

2038

25

295

[redacted]

Pit 6 Balance										
Stream No.	410	411	412	413	414	415	416	417	418	419
Component	TOTAL SCRUBBER D'CHARGE	VENTURI RECYCLE	PACKED TOWER RECYCLE	SCRUBBER BLEED	CONDENSA TO TRANS. TANK	WATER TO COLLECT. TANK	SCRUBBER WATER MAKEUP	SCRUBBER CAUSTIC SUPPLY	VENTURI OFFGAS	COND. TO RECYCLE TANK
Operating Time (hrs/day)	24	24	24	24	24	24	24	24	24	24
Operating Time (days/wk)	7	7	7	7	7	7	7	7	7	7
Solids (Total) (lb/hr)	1428	658	184	586	0	586	0	0	21.2	0
Liquids (Total) (lb/hr)	27128	12500	3500	11126	2001	11126	10121	377	0	2001
H2O (lb/hr)	26538.1	12229.1	3424.2	10884.8	2000.6	10884.8	10120.6	188.3	0.0	2000.6
NaOH (lb/hr)	271.78	125.24	35.07	111.47	0.00	111	0.00	188.29	0.00	0.00
Other Salts (Total) (lb/hr)	311.73	143.65	40.22	127.86	0.00	128	0.00	0.00	0.00	0.00
Organics (lb/hr)	4.3	2.0	0.6	1.8	0.4	1.8	0.0	0.0	0.0	0.4
Gas (Total) (lb/hr)	0	0	0	0	0	0	0	0	3083	0
H2O (lb/hr)	0	0	0	0	0	0	0	0	2102	0
N2 (lb/hr)	0	0	0	0	0	0	0	0	719	0
O2 (lb/hr)	0	0	0	0	0	0	0	0	221	0
NO2 (lb/hr)	0.000	0.000	0.000	0.000	0.000	0.000	0.000	0.000	38.017	0.000
CO2 (lb/hr)	0.000	0.000	0.000	0.000	0.000	0.000	0.000	0.000	0.001	0.000
HF (lb/hr)	0.000	0.000	0.000	0.000	0.000	0.000	0.000	0.000	1.654	0.000
NH3 (lb/hr)	0.000	0.000	0.000	0.000	0.000	0.000	0.000	0.000	0.000	0.000
Rn (pCi/L)	0	0	0	0	0	0	0	0	33	0
Other (lb/hr)	0.000	0.000	0.000	0.000	0.000	0.000	0.000	0.000	0.511	0.000
Total Mass Flow (lb/hr)	27711	12500	3500	11711	2001	11711	10121	377	310	2001
Gas Flow (scfm)	0	0	0	0	0	0	0	0	950	0
Gas Flow (acfm)	0	0	0	0	0	0	0	0	1199	0
Liquid Flow (gpm)	54	25	7	22	4	22	20	0.5	0	4
Temperature (F)	150	150	150	151	50	151	77	77	196	50
Pressure (in WC)									377	
Design Flow (acfm)										
Heat Content (BTU/hr)	1985211	908395	254351	822465	-53348	822465	0	-119	2346960	-53348

SK-F-03913 **DRIED WASTE BLENDING & LOADOUT** **(PIT 6)**

COMPONENT	211 Debris to Loadout	215 10 Day Dryer Bypass	216 Dry Waste to Blending	218 From Debris Shredder	315 Dryer Product from Mix	501 Mixed Mat'l to Blending	502 Mixed Mat'l to Storage	503 Mixed Mat'l to Screen'g	504 Mixed Mat'l to Loading	505 Total to Decon	506 To Off-Site Disposal
Operating Time (hrs/day)	8	24	16	8	24	8	8	8	8	8	8
Operating Time (days/wk)	5	7	5	5	7	5	5	5	5	5	5
Solids (lbs/hr)	667	0	384	3558	37065	156441	159999	159999	159999	160666	160666
Water/Liquids (lbs/hr)	111	0	115	591	3708	15804	16395	16395	16395	16506	16506
Water Vapor (lbs/hr)											
Air/Gas (lbs/hr)											
Mass Flow (lbs/hr)	778	0	500	4149	40773	172246	176394	176394	176394	177172	177172
Vol. Flow (gpm)											
Vol. Flow (scfm)											
Temperature (F)											

2038

956

MASS BALANCES

BURN PIT

SK-F-03909 **WASTE RETRIEVAL (BURNPIT)**

COMPONENT	101 Dry Waste & Soil Removal	102 Wet Waste Removal	103 Large Debris Removal	104 Large Non-Proc Removal	105 Large Proc Removal	106 Wash Water Supply	107 Wash Water to Clearwell	108 Storm Water to Clearwell	109 Slurry to Tanker	110 Slurry to Dryer	111 Precip to Pits
Operating Time (hrs/day)	8	8	8	8	8	Intermittent	Intermittent	8	Intermittent	Intermittent	Intermittent
Operating Time (days/wk)	5	5	5	5	5			5			
Solids (lbs/hr)	10745	147552	2213	1107	1107						
Water/Liquids (lbs/hr)	3228	43380	615	308	308			20510			
Water Vapor (lbs/hr)											
Air/Gas (lbs/hr)											
Mass Flow (lbs/hr)	13973	190932	2829	1414	1414	0	0	20510	0	0	0
Mass Flow (gpm)								41.0			
Volumetric Flow (scfm)											
Temperature (F)											

258

2038

SK-F-03910 WASTE PREPARATION (BURNPIT)

COMPONENT	201 Drainage to Clearwell	202 Wet Waste Mixing	203 Dry Waste Mixing	204 Blended Waste to Grizzly	205 > 12" to Mechncal Segreg'n	206 Grizzly < 12" Undersize	207 Ferrous Removal	208 Metal Removal	209 Final Conveyor D'charge	210 Total to Debris Man.	211 Debris to Loadout	212 Derbies to Disposal	213 Waste to Shredder	214 10 Day Stg. to T. Auger	215 10 Day Stg. to Dryer	216 Dry Waste to Blending	217 Debris to Shredder	218 Shred'd Mat'l to Loadout
Operating Time (hrs/day)	16	16	16	16	16	16	16	16	16	16	8	8	16	24	24	16	8	8
Operating Time (days/wk)	5	5	5	5	5	5	5	5	5	5	5	5	5	7	7	5	5	5
Solids (lbs/hr)		73776	0	73776	738	73038	369	369	72300	1476	609	203	72300	0	34429	5373	3246	3246
Water/Liquids (lbs/hr)	1180	20510	0	20510	205	20305	103	103	20100	410	169	56	20100	0	9571	1614	902	902
Water Vapor (lbs/hr)																		
Air/Gas (lbs/hr)																		
Mass Flow (lbs/hr)	1180	94286	0	94286	943	93343	471	471	92400	1886	778	259	92400	0	44000	6986	4149	4149
Mass Flow (gpm)	2.4																	
Vol. Flow (scfm)																		
Temperature (F)																		

NOTE: Stream 212 includes derbies, small and large pieces of uranium, crop tops, etc., along with the excess waste that is diverted with these materials during detection. In actuality, derbies are a small part of this stream.

Burn Pit Balance	SK-F-03911									
Stream No.	110	214	215	301	302	303	304	305	306	307
Component	SLURRY TO DRYER	10-DAY STG. TO T. AUGER	10-DAY STG. TO DRYER	AMBIENT AIR TO ECON'R	HOT SWEEP AIR	TOTAL AIR TO BURNERS	TOT. NAT GAS TO BURNERS	FURNACE OG TO ECON'R	FURNACE OG FROM ECON'R	COOLING AIR
Operating Time (hrs/day)	INTERMITTENT	24	24	24	24	24	24	24	24	24
Operating Time (days/wk)		7	7	7	7	7	7	7	7	7
Solids (Total) (lb/hr)		0	34429	0	0	0	0	0	0	0
Liquids (Total) (lb/hr)		0	9571	0	0	0	0	0	0	0
H2O (lb/hr)		0.0	9562.9	0	0	0	0	0	0	0
NaOH (lb/hr)				0	0	0	0	0	0	0
Other Salts (Total) (lb/hr)				0	0	0	0	0	0	0
Organics (lb/hr)		0.0	8.1	0.0	0.0	0.0	0.0	0.0	0.0	0.0
Gas (Total) (lb/hr)				2500	2500	28620	755	29375	29375	48416
H2O (lb/hr)				34	34	389	0	2028	2028	658
N2 (lb/hr)				1899	1899	21737	0	21737	21737	36772
O2 (lb/hr)				567	567	6494	0	3516	3516	10986
NO2 (lb/hr)				0	0	0	0	0	0	0
CO2 (lb/hr)				0	0	0	0	2094	2094	0
HF (lb/hr)				0	0	0	0	0	0	0
NH3 (lb/hr)				0	0	0	0	0	0	0
Rn (pCi/L)				0	0	0	0	0	0	0
Other (lb/hr)				0	0	0	755	0	0	0
Total Mass Flow (lb/hr)		0	44000	2500	2500	28620	755	29375	29375	48416
Gas Flow (scfm)				553	553	6328	274	6615	6615	10705
Gas Flow (acfm)				571	1127	6535	283	17118	16641	11055
Temperature (F)				77	600	77	77	885	848	77
Pressure (in WC)										
Design Flow (acfm)										
Heat Content (BTU/hr)			2584	39968	355295	457605	0	8435988	8120659	774130

301

Burn Pit Balance								
Stream No.	308	309	310	311	312	313	314	315
Component	FURNACE OG TO FAN	FURNACE OG D'CHARGE	PROCESS WATER TO CLEAN	PROCESS OG TO CYCLONE	PROCESS OG TO SCRUBBER	CYCLONE SOLIDS	DRYER PRODUCT TO MIX	DRYER PRODUCT FROM MIX
Operating Time (hrs/day)	24	24	INTERMITTENT	24	24	24	24	24
Operating Time (days/wk)	7	7		7	7	7	7	7
Solids (Total) (lb/hr)	0	0		1721	877	844	32707	33552
Liquids (Total) (lb/hr)	0	0		172	88	84	3271	3356
H2O (lb/hr)	0	0		171.8	87.5	84.2	3263.5	3347.7
NaOH (lb/hr)	0	0		0	0	0	0	0
Other Salts (Total) (lb/hr)	0	0		0	0	0	0	0
Organics (lb/hr)	0.0	0.0		0.4	0.2	0.2	7.7	7.8
Gas (Total) (lb/hr)	77791	77791		8628	8628	0	0	0
H2O (lb/hr)	2686	2686		6162	6162	0	0	0
N2 (lb/hr)	58509	58509		1899	1899	0	0	0
O2 (lb/hr)	14502	14502		567	567	0	0	0
NO2 (lb/hr)	0	0		0.000	0.000	0	0	0
CO2 (lb/hr)	2094	2094		0.007	0.007	0	0	0
HF (lb/hr)	0	0		0.126	0.126	0	0	0
NH3 (lb/hr)	0	0		0.003	0.003	0	0	0
Rn (pCi/L)	0	0		40	36	0	0	0
Other (lb/hr)	0	0		0.023	0.023	0	0	0
Total Mass Flow (lb/hr)	77791	77791		10521	9592	929	35979	36907
Gas Flow (scfm)	17320	17320		2704	2704	0	0	0
Gas Flow (acfm)	28652	28652		3426	3776	0	0	0
Temperature (F)	400	400		199	266	266	199	
Pressure (in WC)				405	399			
Design Flow (acfm)								
Heat Content (BTU/hr)	8894790	8894790		6951398	7160317	59249	1447012	

Burn Pit Balance	SK-F-03956									
Stream No.	312	401	402	403	404	405	406	407	408	409
Component	OFFGAS TO SCRUBBER	OFFGAS TO CONDEN'R	OFFGAS TO REHEATER	CHILLED WATER TO CONDEN'R	CHILLED WTR. FROM CONDEN'R	OFFGAS TO MEPA	OFFGAS TO CARBN BEDS	OFFGAS TO HEPA FILTER	OFFGAS TO FAN	OFFGAS TO ATMOSPHE
Operating Time (hrs/day)	24	24	24	24	24	24	24	24	24	24
Operating Time (days/wk)	7	7	7	7	7	7	7	7	7	7
Solids (Total) (lb/hr)	877	35.1	35.1	0	0	35.1	11.2	11.2	0.0034	0.0034
Liquids (Total) (lb/hr)	88	0	0	684721	684721	0	0	0	0	0
H2O (lb/hr)	87.5	0.0	0.0	684720.8	684720.8	0.0	0.0	0.0	0.0	0.0
NaOH (lb/hr)	0	0.00	0.00	0.00	0.00	0.00	0.00	0.00	0.00	0.00
Other Salts (Total) (lb/hr)	0	0.00	0.00	0.00	0.00	0.00	0.00	0.00	0.00	0.00
Organics (lb/hr)	0.2	0.0	0.0	0.0	0.0	0.0	0.0	0.0	0.0	0.0
Gas (Total) (lb/hr)	8628	7969	2487	0	0	2487	2487	2487	2487	2487
H2O (lb/hr)	6162	5503	21	0	0	21	21	21	21	21
N2 (lb/hr)	1899	1899	1899	0	0	1899	1899	1899	1899	1899
O2 (lb/hr)	567	567	567	0	0	567	567	567	567	567
NO2 (lb/hr)	0	0.000	0.000	0.000	0.000	0.000	0.000	0.000	0.000	0.000
CO2 (lb/hr)	0	0.000	0.000	0.000	0.000	0.000	0.000	0.000	0.000	0.000
HF (lb/hr)	0	0.001	0.001	0.000	0.000	0.001	0.001	0.001	0.001	0.001
NH3 (lb/hr)	0	0.000	0.000	0.000	0.000	0.000	0.000	0.000	0.000	0.000
Rn (pCi/L)	36	44	253	0	0	232	232	232	232	232
Other (lb/hr)	0	0	0	0	0	0	0	0.000	0.000	0.000
Total Mass Flow (lb/hr)	9592	8004	2522	684721	684721	2522	2498	2498	2487	2487
Gas Flow (scfm)	2704	2473	548	0	0	548	548	548	548	548
Gas Flow (acfm)	3778	3114	538	0	0	585	585	585	585	585
Liquid Flow (gpm)	0	0	0	1368	1368	0	0	0	0	0
Temperature (F)	266	195	50	42	51	95	95	95	95	95
Pressure (in WC)	399	367	363							
Design Flow (acfm)										
Heat Content (BTU/hr)	7160317	6137061	12816	-23650819	-17380410	35806	35697	35697	35646	35646

308

2038

303

[redacted]

ERAFS1\VOL1:RSAPPS\RSDATA\
OU-1\PO-145\MASS-BAL.SHT

Burn Pit Balance

Stream No.	410	411	412	413	414	415	416	417	418	419
Component	TOTAL SCRUBBER D'CHARGE	VENTURI RECYCLE	PACKED TOWER RECYCLE	SCRUBBER BLEED	CONDENSA TO TRANS. TANK	WATER TO COLLECT. TANK	SCRUBBER WATER MAKEUP	SCRUBBER CAUSTIC SUPPLY	VENTURI OFFGAS	COND. TO RECYCLE TANK
Operating Time (hrs/day)	24	24	24	24	24	24	24	24	24	24
Operating Time (days/wk)	7	7	7	7	7	7	7	7	7	7
Solids (Total) (lb/hr)	1684	658	184	842	0	842	0	0	59.6	0
Liquids (Total) (lb/hr)	31997	12500	3500	15997	5482	15997	15234	17	0	5482
H2O (lb/hr)	31980.0	12493.2	3498.1	15988.7	5481.6	15988.7	15233.7	8.4	0.0	5481.6
NaOH (lb/hr)	16.29	6.36	1.78	8.14	0.00	8	0.00	8.41	0.00	0.00
Other Salts (Total) (lb/hr)	0.57	0.22	0.06	0.28	0.00	0	0.00	0.00	0.00	0.00
Organics (lb/hr)	0.5	0.2	0.0	0.2	0.0	0.2	0.0	0.0	0.0	0.0
Gas (Total) (lb/hr)	0	0	0	0	0	0	0	0	8160	0
H2O (lb/hr)	0	0	0	0	0	0	0	0	5695	0
N2 (lb/hr)	0	0	0	0	0	0	0	0	1899	0
O2 (lb/hr)	0	0	0	0	0	0	0	0	567	0
NO2 (lb/hr)	0.000	0.000	0.000	0.000	0.000	0.000	0.000	0.000	0.000	0.000
CO2 (lb/hr)	0.000	0.000	0.000	0.000	0.000	0.000	0.000	0.000	0.003	0.000
HF (lb/hr)	0.000	0.000	0.000	0.000	0.000	0.000	0.000	0.000	0.013	0.000
NH3 (lb/hr)	0.000	0.000	0.000	0.000	0.000	0.000	0.000	0.000	0.000	0.000
Rn (pCi/L)	0	0	0	0	0	0	0	0	42	0
Other (lb/hr)	0.000	0.000	0.000	0.000	0.000	0.000	0.000	0.000	0.002	0.000
Total Mass Flow (lb/hr)	32839	12500	3500	16839	5482	16839	15234	17	8220	5482
Gas Flow (scfm)	0	0	0	0	0	0	0	0	2540	0
Gas Flow (acfm)	0	0	0	0	0	0	0	0	3207	0
Liquid Flow (gpm)	65	25	7	33	11	33	31	0.0	0	11
Temperature (F)	140	140	140	140	50	140	77	77	196	50
Pressure (in WC)									377	
Design Flow (acfm)										
Heat Content (BTU/hr)	2021131	779247	218189	1023695	-146163	1023695	0	-5	6354577	-146163

SK-F-03913 **DRIED WASTE BLENDING & LOADOUT** **(BURNPIT)**

COMPONENT	211 Debris to Loadout	215 10 Day Dryer Bypass	216 Dry Waste to Blending	218 From Debris Shredder	315 Dryer Product from Mix	501 Mixed Mat'l to Blending	502 Mixed Mat'l to Storage	503 Mixed Mat'l to Screen'g	504 Mixed Mat'l to Loading	505 Total to Decon	506 To Off-Site Disposal
Operating Time (hrs/day)	8	24	16	8	24	8	8	8	8	8	8
Operating Time (days/wk)	5	7	5	5	7	5	5	5	5	5	5
Solids (lbs/hr)	609	0	5373	3246	33551	151659	154905	154905	154905	155514	155514
Water/Liquids (lbs/hr)	169	0	1614	902	3356	17323	18225	18225	18225	18395	18395
Water Vapor (lbs/hr)											
Air/Gas (lbs/hr)											
Mass Flow (lbs/hr)	778	0	6986	4149	36907	168982	173131	173131	173131	173909	173909
Mass Flow (gpm)											
Vol. Flow (scfm)											
Temperature (F)											

304

-2038

~~825~~

MASS BALANCES

CLEARWELL

SK-F-03909 **WASTE RETRIEVAL (CLEARWELL)**

	101	102	103	104	105	106	107	108	109	110	111
COMPONENT	Dry Waste & Soil Removal	Wet Waste Removal	Large Debris Removal	Large Non-Proc Removal	Large Proc Removal	Wash Water Supply	Wash Water to Clearwell	Storm Water to Clearwell	Slurry to Tanker	Slurry to Dryer	Precip to Pits
Operating Time (hrs/day)	8	8	8	8	8	Intermittent	Intermittent	8	Intermittent	Intermittent	Intermittent
Operating Time (days/wk)	5	5	5	5	5			5			
Solids (lbs/hr)	19392	10961	400	200	200						
Water/Liquids (lbs/hr)	5825	36084	600	300	300			7256			
Water Vapor (lbs/hr)											
Air/Gas (lbs/hr)											
Mass Flow (lbs/hr)	25217	47045	1000	500	500	0	0	7256	0	0	0
Mass Flow (gpm)								14.5			
Volumetric Flow (scfm)											
Temperature (F)											

306

F-2038

307

[redacted]

SK-F-03910 WASTE PREPARATION (CLEARWELL)

COMPONENT	201 Drainage to Clearwell	202 Wet Waste Mixing	203 Dry Waste Mixing	204 Blended Waste to Grizzly	205 > 12" to Mechnical Segreg'n	206 Grizzly < 12" Undersize	207 Ferrous Removal	208 Metal Removal	209 Final Conveyor D'charge	210 Total to Debris Man.	211 Debris to Loadout	212 Derbies to Disposal	213 Waste to Shredder	214 10 Day Stg. to T. Auger	215 10 Day Stg. to Dryer	216 Dry Waste to Blending	217 Debris to Shredder	218 Shred'd Mat'l to Loadout
Operating Time (hrs/day)	16	16	16	16	16	16	16	16	16	16	8	8	16	24	24	16	8	8
Operating Time (days/wk)	5	5	5	5	5	5	5	5	5	5	5	5	5	7	7	5	5	5
Solids (lbs/hr)		5480	7849	13329	133	13196	67	67	13063	267	110	37	13063	220	6000	1847	586	586
Water/Liquids (lbs/hr)	406	17636	2358	19994	200	19794	100	100	19594	400	165	55	19594	331	9000	555	880	880
Water Vapor (lbs/hr)																		
Air/Gas (lbs/hr)																		
Mass Flow (lbs/hr)	406	23117	10207	33323	333	32990	167	167	32657	666	275	92	32657	551	15000	2402	1466	1466
Mass Flow (gpm)	0.8																	
Vol. Flow (scfm)																		
Temperature (F)																		

NOTE: Stream 212 includes derbies, small and large pieces or uranium, crop tops, etc., along with the excess waste that is diverted with these materials during detection. In actuality, derbies are a small part of this stream.

Clearwell Balance	SK-F-03911									
Stream No.	110	214	215	301	302	303	304	305	306	307
Component	SLURRY TO DRYER	10-DAY STG. TO T. AUGER	10-DAY STG. TO DRYER	AMBIENT AIR TO ECON'R	HOT SWEEP AIR	TOTAL AIR TO BURNERS	TOT. NAT GAS TO BURNERS	FURNACE OG TO ECON'R	FURNACE OG FROM ECON'R	COOLING AIR
Operating Time (hrs/day)	INTERMITTENT	24	24	24	24	24	24	24	24	24
Operating Time (days/wk)		7	7	7	7	7	7	7	7	7
Solids (Total) (lb/hr)		220	6000	0	0	0	0	0	0	0
Liquids (Total) (lb/hr)		331	9000	0	0	0	0	0	0	0
H2O (lb/hr)		331.0	8999.8	0	0	0	0	0	0	0
NaOH (lb/hr)				0	0	0	0	0	0	0
Other Salts (Total) (lb/hr)				0	0	0	0	0	0	0
Organics (lb/hr)		0.0	0.2	0.0	0.0	0.0	0.0	0.0	0.0	0.0
Gas (Total) (lb/hr)				3425	3425	34926	921	35847	35847	68151
H2O (lb/hr)				47	47	475	0	2474	2474	927
N2 (lb/hr)				2602	2602	26527	0	26527	26527	51761
O2 (lb/hr)				777	777	7925	0	4291	4291	15484
NO2 (lb/hr)				0	0	0	0	0	0	0
CO2 (lb/hr)				0	0	0	0	2555	2555	0
HF (lb/hr)				0	0	0	0	0	0	0
NH3 (lb/hr)				0	0	0	0	0	0	0
Rn (pCi/L)				0	0	0	0	0	0	0
Other (lb/hr)				0	0	0	921	0	0	0
Total Mass Flow (lb/hr)		551	15000	3425	3425	34926	921	35847	35847	68151
Gas Flow (scfm)				757	757	7722	335	8073	8073	15068
Gas Flow (acfm)				782	1544	7975	345	21983	21334	15561
Temperature (F)				77	600	77	77	955	914	77
Pressure (in WC)										
Design Flow (acfm)										
Heat Content (BTU/hr)			-574	54770	486868	558437	0	11021574	10589475	1089673

309

Clearwell Balance

Stream No.	308	309	310	311	312	313	314	315
Component	FURNACE OG TO FAN	FURNACE OG D'CHARGE	PROCESS WATER TO CLEAN	PROCESS OG TO CYCLONE	PROCESS OG TO SCRUBBER	CYCLONE SOLIDS	DRYER PRODUCT TO MIX	DRYER PRODUCT FROM MIX
Operating Time (hrs/day)	24	24	INTERMITTENT	24	24	24	24	24
Operating Time (days/wk)	7	7		7	7	7	7	7
Solids (Total) (lb/hr)	0	0		300	161	138	5698	6056
Liquids (Total) (lb/hr)	0	0		30	16	14	570	915
H2O (lb/hr)	0	0		30.0	16.1	13.8	569.8	914.7
NaOH (lb/hr)	0	0		0	0	0	0	0
Other Salts (Total) (lb/hr)	0	0		0	0	0	0	0
Organics (lb/hr)	0.0	0.0		0.0	0.0	0.0	0.0	0.0
Gas (Total) (lb/hr)	103999	103999		11828	11828	0	0	0
H2O (lb/hr)	3401	3401		8447	8447	0	0	0
N2 (lb/hr)	78287	78287		2602	2602	0	0	0
O2 (lb/hr)	19755	19755		778	778	0	0	0
NO2 (lb/hr)	0	0		1.917	1.917	0	0	0
CO2 (lb/hr)	2555	2555		0.000	0.000	0	0	0
HF (lb/hr)	0	0		0.014	0.014	0	0	0
NH3 (lb/hr)	0	0		0.000	0.000	0	0	0
Rn (pCi/L)	0	0		10	10	0	0	0
Other (lb/hr)	0	0		0.157	0.157	0	0	0
Total Mass Flow (lb/hr)	103999	103999		12158	12006	152	6268	6971
Gas Flow (scfm)	23141	23141		3707	3707	0	0	0
Gas Flow (acfm)	38282	38282		5221	5176	0	0	0
Temperature (F)	400	400		272	266	266	272	
Pressure (in WC)				405	399			
Design Flow (acfm)								
Heat Content (BTU/hr)	11679148	11679148		9779398	9741126	8438	359984	

Clearwell Balance	SK-F-03956									
Stream No.	312	401	402	403	404	405	406	407	408	409
Component	OFFGAS TO SCRUBBER	OFFGAS TO CONDEN'R	OFFGAS TO REHEATER	CHILLED WATER TO CONDEN'R	CHILLED WTR. FROM CONDEN'R	OFFGAS TO MEPA	OFFGAS TO CARBN BEDS	OFFGAS TO HEPA FILTER	OFFGAS TO FAN	OFFGAS TO ATMOSPHE
Operating Time (hrs/day)	24	24	24	24	24	24	24	24	24	24
Operating Time (days/wk)	7	7	7	7	7	7	7	7	7	7
Solids (Total) (lb/hr)	161	4.6	4.6	0	0	4.6	1.3	1.3	0.0004	0.0004
Liquids (Total) (lb/hr)	16	0	0	977832	977832	0	0	0	0	0
H2O (lb/hr)	16.1	0.0	0.0	977831.7	977831.7	0.0	0.0	0.0	0.0	0.0
NaOH (lb/hr)	0	0.00	0.00	0.00	0.00	0.00	0.00	0.00	0.00	0.00
Other Salts (Total) (lb/hr)	0	0.00	0.00	0.00	0.00	0.00	0.00	0.00	0.00	0.00
Organics (lb/hr)	0.0	0.0	0.0	0.0	0.0	0.0	0.0	0.0	0.0	0.0
Gas (Total) (lb/hr)	11828	11240	3408	0	0	3408	3408	3408	3408	3408
H2O (lb/hr)	8447	7861	29	0	0	29	29	29	29	29
N2 (lb/hr)	2602	2602	2602	0	0	2602	2602	2602	2602	2602
O2 (lb/hr)	778	777	777	0	0	777	777	777	777	777
NO2 (lb/hr)	2	0.134	0.134	0.000	0.000	0.134	0.134	0.134	0.134	0.134
CO2 (lb/hr)	0	0.000	0.000	0.000	0.000	0.000	0.000	0.000	0.000	0.000
HF (lb/hr)	0	0.000	0.000	0.000	0.000	0.000	0.000	0.000	0.000	[illegible]
NH3 (lb/hr)	0	0.000	0.000	0.000	0.000	0.000	0.000	0.000	0.000	0.000
Rn (pCi/L)	10	12	70	0	0	64	64	64	64	[illegible]
Other (lb/hr)	0	0	0	0	0	0	0	0.001	0.001	0.001
Total Mass Flow (lb/hr)	12006	11245	3413	977832	977832	3413	3409	3409	3408	3408
Gas Flow (scfm)	3707	3501	751	0	0	751	751	751	751	751
Gas Flow (acfm)	5176	4412	737	0	0	802	802	802	802	802
Liquid Flow (gpm)	0	0	0	1953	1954	0	0	0	0	0
Temperature (F)	266	195	50	42	51	95	95	95	95	95
Pressure (in WC)	399	367	363							
Design Flow (acfm)										
Heat Content (BTU/hr)	9741126	8763619	17850	-33775112	-24820506	48863	48852	48852	48847	48847

310

2038

311

[redacted]

Clearwell Balance

Stream No.	410	411	412	413	414	415	416	417	418	419
Component	TOTAL SCRUBBER D'CHARGE	VENTURI RECYCLE	PACKED TOWER RECYCLE	SCRUBBER BLEED	CONDENSA TO TRANS. TANK	WATER TO COLLECT. TANK	SCRUBBER WATER MAKEUP	SCRUBBER CAUSTIC SUPPLY	VENTURI OFFGAS	COND. TO RECYCLE TANK
Operating Time (hrs/day)	24	24	24	24	24	24	24	24	24	24
Operating Time (days/wk)	7	7	7	7	7	7	7	7	7	7
Solids (Total) (lb/hr)	318	128	35	157	0	157	0	0	7.7	0
Liquids (Total) (lb/hr)	31530	12500	3500	15530	7832	15530	14907	19	0	7832
H2O (lb/hr)	31508.8	12490.8	3497.4	15518.5	7832.0	15518.5	14906.9	9.5	0.0	7832.0
NaOH (lb/hr)	16.04	6.36	1.78	7.90	0.00	8	0.00	9.48	0.00	0.00
Other Salts (Total) (lb/hr)	6.75	2.67	0.75	3.32	0.00	3	0.00	0.00	0.00	0.00
Organics (lb/hr)	0.3	0.1	0.0	0.1	0.0	0.1	0.0	0.0	0.0	0.0
Gas (Total) (lb/hr)	0	0	0	0	0	0	0	0	11429	0
H2O (lb/hr)	0	0	0	0	0	0	0	0	8049	0
N2 (lb/hr)	0	0	0	0	0	0	0	0	2602	0
O2 (lb/hr)	0	0	0	0	0	0	0	0	777	0
NO2 (lb/hr)	0.000	0.000	0.000	0.000	0.000	0.000	0.000	0.000	1.342	0.000
CO2 (lb/hr)	0.000	0.000	0.000	0.000	0.000	0.000	0.000	0.000	0.000	0.000
HF (lb/hr)	0.000	0.000	0.000	0.000	0.000	0.000	0.000	0.000	0.001	0.000
NH3 (lb/hr)	0.000	0.000	0.000	0.000	0.000	0.000	0.000	0.000	0.000	0.000
Rn (pCi/L)	0	0	0	0	0	0	0	0	11	0
Other (lb/hr)	0.000	0.000	0.000	0.000	0.000	0.000	0.000	0.000	0.012	0.000
Total Mass Flow (lb/hr)	31687	12500	3500	15687	7832	15687	14907	19	11437	7832
Gas Flow (scfm)	0	0	0	0	0	0	0	0	3567	0
Gas Flow (acfm)	0	0	0	0	0	0	0	0	4506	0
Liquid Flow (gpm)	64	25	7	32	16	32	30	0.0	0	16
Temperature (F)	140	140	140	140	50	140	77	77	197	50
Pressure (in WC)									377	
Design Flow (acfm)										
Heat Content (BTU/hr)	1987301	786287	220160	980853	-208835	980853	0	-6	8977675	-208835

SK-F-03913 **DRIED WASTE BLENDING & LOADOUT** **(CLEARWELL)**

	211	215	216	218	315	501	502	503	504	505	506
COMPONENT	Debris to Loadout	10 Day Dryer Bypass	Dry Waste to Blending	From Debris Shredder	Dryer Product from Mix	Mixed Mat'l to Blending	Mixed Mat'l to Storage	Mixed Mat'l to Screen'g	Mixed Mat'l to Loading	Total to Decon	To Off-Site Disposal
Operating Time (hrs/day)	8	24	16	8	24	8	8	8	8	8	8
Operating Time (days/wk)	5	7	5	5	7	5	5	5	5	5	5
Solids (lbs/hr)	110	0	1847	586	6056	29131	29717	29717	29717	29827	29827
Water/Liquids (lbs/hr)	165	0	555	880	915	4951	5830	5830	5830	5995	5995
Water Vapor (lbs/hr)											
Air/Gas (lbs/hr)											
Mass Flow (lbs/hr)	275	0	2402	1466	6971	34082	35548	35548	35548	35823	35823
Mass Flow (gpm)											
Vol. Flow (scfm)											
Temperature (F)											

235

2038

WEEKLY MASS BALANCES

PIT 1

[redacted]

313

Pit 1

OVERALL BALANCE					
		(tons/week)			
Stream No.	Stream Description	Solids	Water	Gas	Total
	INPUT				
101	Dry Waste & Soil Removal	183	55		237
102	Wet Waste Removal	3986	861		4847
103	Large Debris Removal	60	12		72
	Waste Water Drainage to Pit	0	299		299
	TOTAL	4228	1227	0	5455
	OUTPUT				
104	Large Non-Processable Debris	30	6		36
108	Drainage Water to Clearwell	0	299		299
201	Storage Pile Drainage to BSL	0	32		32
212	Derbies to Disposal	5	1		7
312	Offgas to Scrubber	97	340		437
506	Waste to Off-Site Disposal	4096	549		4645
	TOTAL	4228	1227	0	5455

NOTE: Stream 212 includes derbies, small and large pieces or uranium, crop tops, etc., along with the excess waste that is diverted with these materials during detection. In actuality, derbies are a small part of this stream.

Waste Retrieval SK-F-03909					
		(tons/week)			
Stream No.	Stream Description	Solids	Water	Gas	Total
	INPUT				
101	Dry Waste & Soil Removal	183	55	0	237
102	Wet Waste Removal	3986	861	0	4847
103	Large Debris Removal	60	12	0	72
	Water Drained from Waste	0	299	0	299
	TOTAL	4228	1227	0	5455
	OUTPUT				
101	Dry Waste & Soil Removal	183	55	0	237
102	Wet Waste Removal	3986	861	0	4847
104	Large Non-Processable Debris	30	6	0	36
105	Large Proc. Debris to Mng't	30	6	0	36
108	Waste Water Drainage to Pit	0	299	0	299
	TOTAL	4228	1227	0	5455

315

Pit 1

Waste Preparation SK-F-03910					
		(tons/week)			
Stream No.	Stream Description	Solids	Water	Gas	Total
	INPUT				
101	Dry Waste & Soil Removal	183	55	0	237
102	Wet Waste Removal	3986	861	0	4847
105	Large Proc. Debris to Mng't	30	6	0	36
	TOTAL	4198	922	0	5120
	OUTPUT				
201	Storage Pile Drainage to BSL	0	32	0	32
211	Debris to Railcar Loading	16	3	0	20
212	Derbies to Disposal	5	1	0	7
214	Waste to Twin Auger Mixer	847	176	0	1023
215	Wet Waste to Dryer	3060	636	0	3696
216	Dry Waste & Soil to Blending	183	55	0	237
218	Shredded Material to Blending	88	18	0	106
	TOTAL	4198	922	0	5120

NOTE: Stream 212 includes derbies, small and large pieces or uranium, crop tops, etc., along with the excess waste that is diverted with these materials during detection. In actuality, derbies are a small part of this stream.

316

PIT 1

Drying and Off-Gas Treatment Sheet 1 of 2 (SK-F-03911)					
		(tons/week)			
Stream No.	Stream Description	Solid	Liquid	Gas	Total
	INPUT				
214	10-day storage to twin auger	622	148	0	770
215	10-day storage to dryer	2988	708	0	3696
301	Sweep air	0	0	164	164
303	Combustion air (Total)	0	0	1958	1958
304	Natural Gas	0	0	52	52
307	Cooling Air	0	0	2841	2841
	TOTAL	3610	856	5014	9480
	OUTPUT				
309	Furnace OG discharge	0	0	4850	4850
312	Process OG to scrubber	51	5	578	634
315	Dryer product from mix	3555	441	0	3996
	TOTAL	3606	446	5428	9480

Notes:

1. 4 tons/week of solid components decompose or react to form gases
2. 410 tons/week of liquid components vaporize to form gases

317

PIT 1

Drying and Off-Gas Treatment Sheet 2 of 2 (SK-F-03956)					
		(tons/week)			
Stream No.	Stream Description	Solid	Liquid	Gas	Total
	INPUT				
312	OG to scrubber	51.4	5	578	634
416	Scrubber water make-up	0	892	0	892
417	Scrubber caustic supply	0	19	0	19
	TOTAL	51	916	578	1546
	OUTPUT				
	Removed by MEPA and HEPA	1.4			1
409	OG to atmosphere	0	0	164	164
415	Wastewater to collection tank	50.6	961	0	1012
419	Condensate to recycle tank	0	369	0	369
	TOTAL	52	1330	164	1546

Notes:

1. 414 tons/week of gas are condensed to liquid
2. Solids balance differently due to round-off errors

318

Dried Waste Blending and Loadout SK-F-03913					
		(tons/week)			
Stream No.	Stream Description	Solids	Water	Gas	Total
	INPUT				
211	Debris to Railcar Loading	16	3	0	20
216	Dry Waste & Soil to Blending	183	55	0	237
218	Shredded Material to Blending	88	18	0	106
315	Product from Twin Auger Mixer	3809	472	0	4281
	TOTAL	4096	549	0	4645
	OUTPUT				
506	Product to Off-Site Disposal	4096	549	0	4645
	TOTAL	4096	549	0	4645

[redacted]

319

WEEKLY MASS BALANCES

PIT 2

OVERALL BALANCE					
		(tons/week)			
Stream No.	Stream Description	Solids	Water	Gas	Total
	INPUT				
101	Dry Waste & Soil Removal	205	61		266
102	Wet Waste Removal	717	903		1621
103	Large Debris Removal	11	13		24
	Waste Water Drainage to Pit	0	204		204
	TOTAL	933	1182	0	2115
	OUTPUT				
104	Large Non-Processable Debris	5	7		12
108	Drainage Water to Clearwell	0	204		204
201	Storage Pile Drainage to BSL	0	22		22
212	Derbies to Disposal	1	1		2
312	Offgas to Scrubber	14	707		721
506	Waste to Off-Site Disposal	913	241		1154
	TOTAL	933	1182	0	2115

NOTE: Stream 212 includes derbies, small and large pieces or uranium, crop tops, etc., along with the excess waste that is diverted with these materials during detection. In actuality, derbies are a small part of this stream.

Waste Retrieval SK-F-03909					
		(tons/week)			
Stream No.	Stream Description	Solids	Water	Gas	Total
	INPUT				
101	Dry Waste & Soil Removal	205	61	0	266
102	Wet Waste Removal	717	903	0	1621
103	Large Debris Removal	11	13	0	24
	Water Drained from Waste	0	204	0	204
	TOTAL	933	1182	0	2115
	OUTPUT				
101	Dry Waste & Soil Removal	205	61	0	266
102	Wet Waste Removal	717	903	0	1621
104	Large Non-Processable Debris	5	7	0	12
105	Large Proc. Debris to Mng't	5	7	0	12
108	Waste Water Drainage to Pit	0	204	0	204
	TOTAL	933	1182	0	2115

[redacted]

322

Pit 2

Waste Preparation SK-F-03910					
		(tons/week)			
Stream No.	Stream Description	Solids	Water	Gas	Total
	INPUT				
101	Dry Waste & Soil Removal	205	61	0	266
102	Wet Waste Removal	717	903	0	1621
105	Large Proc. Debris to Mng't	5	7	0	12
	TOTAL	927	971	0	1899
	OUTPUT				
201	Storage Pile Drainage to BSL	0	22	0	22
211	Debris to Railcar Loading	3	4	0	7
212	Derbies to Disposal	1	1	0	2
214	Waste to Twin Auger Mixer	78	95	0	173
215	Wet Waste to Dryer	626	768	0	1394
216	Dry Waste & Soil to Blending	205	61	0	266
218	Shredded Material to Blending	16	19	0	35
	TOTAL	927	971	0	1899

NOTE: Stream 212 includes derbies, small and large pieces or uranium, crop tops, etc., along with the excess waste that is diverted with these materials during detection. In actuality, derbies are a small part of this stream.

Drying and Off-Gas Treatment Sheet 1 of 2 (SK-F-03911)					
		(tons/week)			
Stream No.	Stream Description	Solid	Liquid	Gas	Total
	INPUT				
214	10-day storage to twin auger	0	0	0	0
215	10-day storage to dryer	571	763	0	1334
301	Sweep air	0	0	287	287
303	Combustion air (Total)	0	0	2788	2788
304	Natural Gas	0	0	74	74
307	Cooling Air	0	0	5189	5189
	TOTAL	571	763	8338	9672
	OUTPUT				
309	Furnace OG discharge	0	0	8050	8050
312	Process OG to scrubber	11	1	993	1006
315	Dryer product from mix	560	56	0	616
	TOTAL	571	57	9044	9672

Notes:

1. 706 tons/week of liquid components vaporize to form gases

[redacted]

324

Pit 2

Drying and Off-Gas Treatment Sheet 2 of 2 (SK-F-03956)					
		(tons/week)			
Stream No.	Stream Description	Solid	Liquid	Gas	Total
	INPUT				
312	OG to scrubber	11	1	993	1006
416	Scrubber water make-up	0	1042	0	1042
417	Scrubber caustic supply	0	2	0	2
	TOTAL	11	1045	993	2050
	OUTPUT				
	Removed by MEPA and HEPA	0.3			0.3
409	OG to atmosphere	0	0	286	286
415	Wastewater to collection tank	11	1087	0	1098
419	Condensate to recycle tank	0	665	0	665
	TOTAL	11	1752	286	2049

Notes:

1. 707 tons/week of gas are condensed to liquid
2. Total different due to round-off errors

Dried Waste Blending and Loadout SK-F-03913					
		(tons/week)			
Stream No.	Stream Description	Solids	Water	Gas	Total
	INPUT				
211	Debris to Railcar Loading	3	4	0	7
216	Dry Waste & Soil to Blending	205	61	0	266
218	Shredded Material to Blending	16	19	0	35
315	Product from Twin Auger Mixer	689	156	0	846
	TOTAL	913	241	0	1154
	OUTPUT				
506	Product to Off-Site Disposal	913	241	0	1154
	TOTAL	913	241	0	1154

326

WEEKLY MASS BALANCES

PIT 3

Pit 3

OVERALL BALANCE					
		(tons/week)			
Stream No.	Stream Description	Solids	Water	Gas	Total
	INPUT				
101	Dry Waste & Soil Removal	33	10		43
102	Wet Waste Removal	583	792		1375
103	Large Debris Removal	9	12		20
	Waste Water Drainage to Pit	0	125		125
	TOTAL	625	939	0	1565
	OUTPUT				
104	Large Non-Processable Debris	4	6		10
108	Drainage Water to Clearwell	0	125		125
201	Storage Pile Drainage to BSL	0	14		14
212	Derbies to Disposal	1	1		2
312	Offgas to Scrubber	12	707		718
506	Waste to Off-Site Disposal	608	86		695
	TOTAL	625	939	0	1565

NOTE: Stream 212 includes derbies, small and large pieces or uranium, crop tops, etc., along with the excess waste that is diverted with these materials during detection. In actuality, derbies are a small part of this stream.

~~[illegible]~~

328

Waste Retrieval SK-F-03909					
		(tons/week)			
Stream No.	Stream Description	Solids	Water	Gas	Total
	INPUT				
101	Dry Waste & Soil Removal	33	10	0	43
102	Wet Waste Removal	583	792	0	1375
103	Large Debris Removal	9	12	0	20
	Water Drained from Waste	0	125	0	125
	TOTAL	625	939	0	1565
	OUTPUT				
101	Dry Waste & Soil Removal	33	10	0	43
102	Wet Waste Removal	583	792	0	1375
104	Large Non-Processable Debris	4	6	0	10
105	Large Proc. Debris to Mng't	4	6	0	10
108	Waste Water Drainage to Pit	0	125	0	125
	TOTAL	625	939	0	1565

329

Pit 3

Waste Preparation SK-F-03910					
		(tons/week)			
Stream No.	Stream Description	Solids	Water	Gas	Total
	INPUT				
101	Dry Waste & Soil Removal	33	10	0	43
102	Wet Waste Removal	583	792	0	1375
105	Large Proc. Debris to Mng't	4	6	0	10
	TOTAL	621	808	0	1429
	OUTPUT				
201	Storage Pile Drainage to BSL	0	13.99	0	13.99
211	Debris to Railcar Loading	2	3	0	6
212	Derbies to Disposal	1	1	0	2
214	Waste to Twin Auger Mixer	0	0	0	0
215	Wet Waste to Dryer	571	763	0	1334
216	Dry Waste & Soil to Blending	33	10	0	43
218	Shredded Material to Blending	13	17	0	30
	TOTAL	621	808	0	1429

NOTE: Stream 212 includes derbies, small and large pieces or uranium, crop tops, etc., along with the excess waste that is diverted with these materials during detection. In actuality, derbies are a small part of this stream.

Drying and Off-Gas Treatment Sheet 1 of 2 (SK-F-03911)					
		(tons/week)			
Stream No.	Stream Description	Solid	Liquid	Gas	Total
	INPUT				
214	10-day storage to twin auger	78	95	0	173
215	10-day storage to dryer	626	768	0	1394
301	Sweep air	0	0	287	287
303	Combustion air (Total)	0	0	3039	3039
304	Natural Gas	0	0	80	80
307	Cooling Air	0	0	6202	6202
	TOTAL	703	864	9609	11175
	OUTPUT				
309	Furnace OG discharge	0	0	9321	9321
312	Process OG to scrubber	13	1	994	1008
315	Dryer product from mix	689	156	0	846
	TOTAL	702	158	10315	11175

Notes:

1. 1 ton/week of solid components decompose or react to form gases
2. 706 tons/week of liquid components vaporize to form gases

331

Pit 3

Drying and Off-Gas Treatment Sheet 2 of 2 (SK-F-03956)					
		(tons/week)			
Stream No.	Stream Description	Solid	Liquid	Gas	Total
	INPUT				
312	OG to scrubber	13	1	994	1008
416	Scrubber water make-up	0	1210	0	1210
417	Scrubber caustic supply	0	4	0	4
	TOTAL	13	1215	994	2222
	OUTPUT				
	Removed by MEPA and HEPA	0.3			0.3
409	OG to atmosphere	0	0	286	286
415	Wastewater to collection tank	13	1263	0	1276
419	Condensate to recycle tank	0	660	0	660
	TOTAL	13	1923	286	2222

Notes:

1. 708 tons/week of gas are condensed to liquid

332

Dried Waste Blending and Loadout SK-F-03913					
		(tons/week)			
Stream No.	Stream Description	Solids	Water	Gas	Total
	INPUT				
211	Debris to Railcar Loading	2	3	0	6
216	Dry Waste & Soil to Blending	33	10	0	43
218	Shredded Material to Blending	13	17	0	30
315	Product from Twin Auger Mixer	560	56	0	616
	TOTAL	608	86	0	695
	OUTPUT				
506	Product to Off-Site Disposal	608	86	0	695
	TOTAL	608	86	0	695

333

WEEKLY MASS BALANCES

PIT 4

Pit 4

OVERALL BALANCE					
		(tons/week)			
Stream No.	Stream Description	Solids	Water	Gas	Total
	INPUT				
101	Dry Waste & Soil Removal	154	46		200
102	Wet Waste Removal	3684	903		4586
103	Large Debris Removal	55	13		68
	Waste Water Drainage to Pit	0	258		258
	TOTAL	3893	1220	0	5113
	OUTPUT				
104	Large Non-Processable Debris	28	7		34
108	Drainage Water to Clearwell	0	258		258
201	Storage Pile Drainage to BSL	0	29		29
212	Derbies to Disposal	5	1		6
312	Offgas to Scrubber	55	415		470
506	Waste to Off-Site Disposal	3805	510		4315
	TOTAL	3893	1220	0	5113

NOTE: Stream 212 includes derbies, small and large pieces or uranium, crop tops, etc., along with the excess waste that is diverted with these materials during detection. In actuality, derbies are a small part of this stream.

335

Waste Retrieval SK-F-03909					
		(tons/week)			
Stream No.	Stream Description	Solids	Water	Gas	Total
	INPUT				
101	Dry Waste & Soil Removal	154	46	0	200
102	Wet Waste Removal	3684	903	0	4586
103	Large Debris Removal	55	13	0	68
	Water Drained from Waste	0	258	0	258
	TOTAL	3893	1220	0	5113
	OUTPUT				
101	Dry Waste & Soil Removal	154	46	0	200
102	Wet Waste Removal	3684	903	0	4586
104	Large Non-Processable Debris	28	7	0	34
105	Large Proc. Debris to Mng't	28	7	0	34
108	Waste Water Drainage to Pit	0	258	0	258
	TOTAL	3893	1220	0	5113

[redacted]

336

2038

Waste Preparation SK-F-03910					
		(tons/week)			
Stream No.	Stream Description	Solids	Water	Gas	Total
	INPUT				
101	Dry Waste & Soil Removal	154	46	0	200
102	Wet Waste Removal	3684	903	0	4586
105	Large Proc. Debris to Mng't	28	7	0	34
	TOTAL	3866	955	0	4821
	OUTPUT				
201	Storage Pile Drainage to BSL	0	29	0	29
211	Debris to Railcar Loading	15	4	0	19
212	Derbies to Disposal	5	1	0	6
214	Waste to Twin Auger Mixer	622	147	0	770
215	Wet Waste to Dryer	2988	708	0	3696
216	Dry Waste & Soil to Blending	154	46	0	200
218	Shredded Material to Blending	81	19	0	100
	TOTAL	3866	955	0	4821

NOTE: Stream 212 includes derbies, small and large pieces or uranium, crop tops, etc., along with the excess waste that is diverted with these materials during detection. In actuality, derbies are a small part of this stream.

337

Drying and Off-Gas Treatment Sheet 1 of 2 (SK-F-03911)					
		(tons/week)			
Stream No.	Stream Description	Solid	Liquid	Gas	Total
	INPUT				
214	10-day storage to twin auger	847	176	0	1023
215	10-day storage to dryer	3060	636	0	3696
301	Sweep air	0	0	130	130
303	Combustion air (Total)	0	0	1648	1648
304	Natural Gas	0	0	43	43
307	Cooling Air	0	0	2258	2258
	TOTAL	3906	812	4079	8798
	OUTPUT				
309	Furnace OG discharge	0	0	3949	3949
312	Process OG to scrubber	90	9	467	567
315	Dryer product from mix	3809	472	0	4281
	TOTAL	3900	481	4417	8798

Notes:

1. 6 tons/week of solid components decompose or react to form gases
2. 331 tons/week of liquid components vaporize to form gases
3. Small (1 ton/week) differences are due to round-off errors

[redacted]

338

Pit 4

Drying and Off-Gas Treatment Sheet 2 of 2 (SK-F-03956)					
		(tons/week)			
Stream No.	Stream Description	Solid	Liquid	Gas	Total
	INPUT				
312	OG to scrubber	90	9	467	567
416	Scrubber water make-up	0	1559	0	1559
417	Scrubber caustic supply	0	49	0	49
	TOTAL	90	1617	467	2175
	OUTPUT				
	Removed by MEPA and HEPA	2			2
409	OG to atmosphere	0	0	129	129
415	Wastewater to collection tank	89	1684	0	1772
419	Condensate to recycle tank	0	271	0	271
	TOTAL	90	1955	129	2175

Notes:

1. 338 tons/week of gas are condensed to liquid
2. Small (1 ton/week) differences are due to round-off errors

Dried Waste Blending and Loadout SK-F-03913					
		(tons/week)			
Stream No.	Stream Description	Solids	Water	Gas	Total
	INPUT				
211	Debris to Railcar Loading	15	4	0	19
216	Dry Waste & Soil to Blending	154	46	0	200
218	Shredded Material to Blending	81	19	0	100
315	Product from Twin Auger Mixer	3555	441	0	3996
	TOTAL	3805	510	0	4315
	OUTPUT				
506	Product to Off-Site Disposal	3805	510	0	4315
	TOTAL	3805	510	0	4315

[redacted]

340

WEEKLY MASS BALANCES

PIT 5

Pit 5

OVERALL BALANCE					
		(tons/week)			
Stream No.	Stream Description	Solids	Water	Gas	Total
	INPUT				
101	Dry Waste & Soil Removal	388	117		504
102	Wet Waste Removal	219	722		941
103	Large Debris Removal	8	12		20
	Waste Water Drainage to Pit	0	145		145
	TOTAL	615	995	0	1610
	OUTPUT				
104	Large Non-Processable Debris	4	6		10
108	Drainage Water to Clearwell	0	145		145
201	Storage Pile Drainage to BSL	0	16		16
212	Derbies to Disposal	1	1		2
312	Offgas to Scrubber	14	707		721
506	Waste to Off-Site Disposal	597	120		716
	TOTAL	615	995	0	1610

NOTE: Stream 212 includes derbies, small and large pieces or uranium, crop tops, etc., along with the excess waste that is diverted with these materials during detection. In actuality, derbies are a small part of this stream.

Waste Retrieval SK-F-03909					
		(tons/week)			
Stream No.	Stream Description	Solids	Water	Gas	Total
	INPUT				
101	Dry Waste & Soil Removal	388	117	0	504
102	Wet Waste Removal	219	722	0	941
103	Large Debris Removal	8	12	0	20
	Water Drained from Waste	0	145	0	145
	TOTAL	615	995	0	1610
	OUTPUT				
101	Dry Waste & Soil Removal	388	117	0	504
102	Wet Waste Removal	219	722	0	941
104	Large Non-Processable Debris	4	6	0	10
105	Large Proc. Debris to Mng't	4	6	0	10
108	Waste Water Drainage to Pit	0	145	0	145
	TOTAL	615	995	0	1610

[redacted]

343

Pit 5

Waste Preparation SK-F-03910					
		(tons/week)			
Stream No.	Stream Description	Solids	Water	Gas	Total
	INPUT				
101	Dry Waste & Soil Removal	388	117	0	504
102	Wet Waste Removal	219	722	0	941
105	Large Proc. Debris to Mng't	4	6	0	10
	TOTAL	611	844	0	1455
	OUTPUT				
201	Storage Pile Drainage to BSL	0	16	0	16
211	Debris to Railcar Loading	2	3	0	5
212	Derbies to Disposal	1	1	0	2
214	Waste to Twin Auger Mixer	19	28	0	46
215	Wet Waste to Dryer	504	756	0	1260
216	Dry Waste & Soil to Blending	74	22	0	96
218	Shredded Material to Blending	12	18	0	29
	TOTAL	611	844	0	1455

NOTE: Stream 212 includes derbies, small and large pieces or uranium, crop tops, etc., along with the excess waste that is diverted with these materials during detection. In actuality, derbies are a small part of this stream.

PIT 5

Drying and Off-Gas Treatment Sheet 1 of 2 (SK-F-03911)					
		(tons/week)			
Stream No.	Stream Description	Solid	Liquid	Gas	Total
	INPUT				
214	10-day storage to twin auger	45	67	0	112
215	10-day storage to dryer	504	756	0	1260
301	Sweep air	0	0	288	288
303	Combustion air (Total)	0	0	2822	2822
304	Natural Gas	0	0	74	74
307	Cooling Air	0	0	5193	5193
	TOTAL	549	823	8377	9749
	OUTPUT				
309	Furnace OG discharge	0	0	8089	8089
312	Process OG to scrubber	10	1	994	1005
315	Dryer product from mix	538	117	0	655
	TOTAL	549	118	9083	9749

Notes:

1. 705 tons/week of liquid components vaporize to form gases
2. Small (1 ton/week) differences are due to round-off errors

[redacted]

345

PIT 5

Drying and Off-Gas Treatment Sheet 2 of 2 (SK-F-03956)					
		(tons/week)			
Stream No.	Stream Description	Solids	Water	Gas	Total
	INPUT				
312	OG to scrubber	10	1	994	1005
416	Scrubber water make-up	0	959	0	959
417	Scrubber caustic supply	0	1	0	1
	TOTAL	10	962	994	1966
	OUTPUT				
	Removed by MEPA and HEPA	0.2			0.2
409	OG to atmosphere	0	0	286	286
415	Wastewater to collection tank	10	1001	0	1011
419	Condensate to recycle tank	0	668	0	668
	TOTAL	10	1669	286	1966

Notes:

1. 705 tons/week of gas are condensed to liquid
2. Small (1 ton/week) differences are due to round-off errors

Dried Waste Blending and Loadout SK-F-03913					
		(tons/week)			
Stream No.	Stream Description	Solids	Water	Gas	Total
	INPUT				
211	Debris to Railcar Loading	2	3	0	5
216	Dry Waste & Soil to Blending	74	22	0	96
218	Shredded Material to Blending	12	18	0	29
315	Product from Twin Auger Mixer	509	77	0	586
	TOTAL	597	120	0	716
	OUTPUT				
506	Product to Off-Site Disposal	597	120	0	716
	TOTAL	597	120	0	716

[redacted]

347

WEEKLY MASS BALANCES

PIT 6

Pit 6

Overall Balance					
		(tons/week)			
Stream No.	Stream Description	Solids	Liquid	Gas	Total
	INPUT				
101	Dry Waste & Soil Removal	215	65		279
102	Wet Waste Removal	2951	868		3819
103	Large Debris Removal	44	12		57
	Waste Water Drainage to Pit	0	410		410
	TOTAL	3210	1355	0	4565
	OUTPUT				
104	Large Non-Processable Debris	22	6		28
108	Drainage Water to Clearwell	0	410		410
201	Storage Pile Drainage to BSL	0	47		47
212	Derbies to Disposal	4	1		5
312	Offgas to Scrubber	74	522		596
506	Waste to Off-Site Disposal	3110	368		3478
	TOTAL	3210	1355	0	4565

NOTE: Stream 212 includes derbies, small and large pieces or uranium, crop tops, etc., along with the excess waste that is diverted with these materials during detection. In actuality, derbies are a small part of this stream.

Waste Retreival SK-F-03909					
		(tons/week)			
Stream No.	Stream Description	Solids	Water	Gas	Total
	INPUT				
101	Dry Waste & Soil Removal	215	65	0	279
102	Wet Waste Removal	2951	868	0	3819
103	Large Debris Removal	44	12	0	57
	Water Drained from Waste	0	410	0	410
	TOTAL	3210	1355	0	4565
	OUTPUT				
101	Dry Waste & Soil Removal	215	65	0	279
102	Wet Waste Removal	2951	868	0	3819
104	Large Non-Processable Debris	22	6	0	28
105	Large Proc. Debris to Mng't	22	6	0	28
108	Waste Water Drainage to Pit	0	410	0	410
	TOTAL	3210	1355	0	4565

350

Pit 6

Waste Preparation SK-F-03910					
		(tons/week)			
Stream No.	Stream Description	Solids	Water	Gas	Total
	INPUT				
101	Dry Waste & Soil Removal	215	65	0	279
102	Wet Waste Removal	2951	868	0	3819
105	Large Proc. Debris to Mng't	22	6	0	28
	TOTAL	3188	938	0	4126
	OUTPUT				
201	Storage Pile Drainage to BSL	0	47	0	47
211	Debris to Railcar Loading	12	3	0	16
212	Derbies to Disposal	4	1	0	5
214	Waste to Twin Auger Mixer	0	0	0	0
215	Wet Waste to Dryer	2892	804	0	3696
216	Dry Waste & Soil to Blending	215	65	0	279
218	Shredded Material to Blending	65	18	0	83
	TOTAL	3188	938	0	4126

NOTE: Stream 212 includes derbies, small and large pieces or uranium, crop tops, etc., along with the excess waste that is diverted with these materials during detection. In actuality, derbies are a small part of this stream.

Drying and Off-Gas Treatment Sheet 1 of 2 (SK-F-03911)					
		(tons/week)			
Stream No.	Stream Description	Solid	Liquid	Gas	Total
	INPUT				
214	10-day storage to twin auger	0	0	0	0
215	10-day storage to dryer	3170	526	0	3696
301	Sweep air	0	0	80	80
303	Combustion air (Total)	0	0	1038	1038
304	Natural Gas	0	0	27	27
307	Cooling Air	0	0	758	758
	TOTAL	3170	526	1903	5599
	OUTPUT				
309	Furnace OG discharge	0	0	1823	1823
312	Process OG to scrubber	50	5	295	351
315	Dryer product from mix	3113	311	0	3425
	TOTAL	3164	316	2119	5599

Notes:

1. 6 tons/week of solid components decompose or react to form gases
2. 210 tons/week of liquid components volatize to form gases

352

Pit 6

Drying and Off-Gas Treatment Sheet 2 of 2 (SK-F-03956)					
		(tons/week)			
Stream No.	Stream Description	Solid	Liquid	Gas	Total
	INPUT				
312	OG to scrubber	50	5	295	351
416	Scrubber water make-up	0	852	0	852
417	Scrubber caustic supply	0	30	0	30
	TOTAL	50	887	295	1232
	OUTPUT				
	Removed by MEPA and HEPA	1.0			1.0
409	OG to atmosphere	0	0	80	80
415	Wastewater to collection tank	49	934	0	984
419	Condensate to recycle tank	0	168	0	168
	TOTAL	50	1102	80	1232

Notes:

1. 215 tons/week of gas are condensed to liquid

Dried Waste Blending and Loadout SK-F-03913					
		(tons/week)			
Stream No.	Stream Description	Solids	Water	Gas	Total
	INPUT				
211	Debris to Railcar Loading	12	3	0	16
216	Dry Waste & Soil to Blending	215	65	0	279
218	Shredded Material to Blending	65	18	0	83
315	Product from Twin Auger Mixer	2818	282	0	3100
	TOTAL	3110	368	0	3478
	OUTPUT				
506	Product to Off-Site Disposal	3110	368	0	3478
	TOTAL	3110	368	0	3478

354

WEEKLY MASS BALANCES

BURN PIT

ERAFS1\VOL1:RSAPPS\RSDATA\
OU-1\PO-145\WKMASBAL.SHT

3/19/96, 11:00am, Rev. No.: B

Burn Pit

OVERALL BALANCE					
		(tons/week)			
Stream No.	Stream Description	Solids	Water	Gas	Total
	INPUT				
101	Dry Waste & Soil Removal	15	5		20
102	Wet Waste Removal	3235	573		3807
103	Large Debris Removal	49	8		57
	Waste Water Drainage to Pit	0	314		314
	TOTAL	3298	899	0	4197
	OUTPUT				
104	Large Non-Processable Debris	24	4		28
108	Drainage Water to Clearwell	0	314		314
201	Storage Pile Drainage to BSL	0	36		36
212	Derbies to Disposal	4	1		5
312	Offgas to Scrubber	56	215		271
506	Waste to Off-Site Disposal	3213	330		3543
	TOTAL	3298	899	0	4197

NOTE: Stream 212 includes derbies, small and large pieces or uranium, crop tops, etc., along with the excess waste that is diverted with these materials during detection. In actuality, derbies are a small part of this stream.

Waste Retrieval SK-F-03909					
		(tons/week)			
Stream No.	Stream Description	Solids	Water	Gas	Total
	INPUT				
101	Dry Waste & Soil Removal	15	5	0	20
102	Wet Waste Removal	3235	573	0	3807
103	Large Debris Removal	49	8	0	57
	Water Drained from Waste	0	314	0	314
	TOTAL	3298	899	0	4197
	OUTPUT				
101	Dry Waste & Soil Removal	15	5	0	20
102	Wet Waste Removal	3235	573	0	3807
104	Large Non-Processable Debris	24	4	0	28
105	Large Proc. Debris to Debris M	24	4	0	28
108	Waste Water Drainage to Pit	0	314	0	314
	TOTAL	3298	899	0	4197

357

Waste Preparation SK-F-03910					
		(tons/week)			
Stream No.	Stream Description	Solids	Water	Gas	Total
	INPUT				
101	Dry Waste & Soil Removal	15	5	0	20
102	Wet Waste Removal	3235	573	0	3807
105	Large Proc. Debris to Debris M	24	4	0	28
	TOTAL	3274	581	0	3855
	OUTPUT				
201	Storage Pile Drainage to BSL	0	36	0	36
211	Debris to Railcar Loading	13	2	0	16
212	Derbies to Disposal	4	1	0	5
214	Waste to Twin Auger Mixer	0	0	0	0
215	Wet Waste to Dryer	3170	526	0	3696
216	Dry Waste & Soil to Blending	15	5	0	20
218	Shredded Material to Blending	71	12	0	83
	TOTAL	3274	581	0	3855

NOTE: Stream 212 includes derbies, small and large pieces or uranium, crop tops, etc., along with the excess waste that is diverted with these materials during detection. In actuality, derbies are a small part of this stream.

Drying and Off-Gas Treatment Sheet 1 of 2 (SK-F-03911)					
		(tons/week)			
Stream No.	Stream Description	Solid	Liquid	Gas	Total
	INPUT				
214	10-day storage to twin auger	0	0	0	0
215	10-day storage to dryer	2892	804	0	3696
301	Sweep air	0	0	210	210
303	Combustion air (Total)	0	0	2402	2402
304	Natural Gas	0	0	63	63
307	Cooling Air	0	0	4053	4053
	TOTAL	2892	804	6729	10425
	OUTPUT				
309	Furnace OG discharge	0	0	6519	6519
312	Process OG to scrubber	74	7	725	806
315	Dryer product from mix	2818	282	0	3100
	TOTAL	2892	289	7243	10425

Notes:

1. 515 tons/week of liquid components vaporize to form gases
2. Small (1 ton/week) differences are due to round-off errors

359

Burn Pit

Drying and Off-Gas Treatment Sheet 2 of 2 (SK-F-03956)					
		(tons/week)			
Stream No.	Stream Description	Solids	Water	Gas	Total
	INPUT				
312	OG to scrubber	74	7	725	806
416	Scrubber water make-up	0	1280	0	1280
417	Scrubber caustic supply	0	1	0	1
	TOTAL	74	1288	725	2087
	OUTPUT				
	Removed by MEPA and HEPA	3			3
409	OG to atmosphere	0	0	209	209
415	Wastewater to collection tank	71	1344	0	1414
419	Condensate to recycle tank	0	460	0	460
	TOTAL	74	1804	209	2087

Notes:

1. 516 tons/week of gas are condensed to liquid

Dried Waste Blending and Loadout SK-F-03913					
		(tons/week)			
Stream No.	Stream Description	Solids	Water	Gas	Total
	INPUT				
211	Debris to Railcar Loading	13	2	0	16
216	Dry Waste & Soil to Blending	15	5	0	20
218	Shredded Material to Blending	71	12	0	83
315	Product from Twin Auger Mixer	3113	311	0	3425
	TOTAL	3213	330	0	3543
	OUTPUT				
506	Product to Off-Site Disposal	3213	330	0	3543
	TOTAL	3213	330	0	3543

[redacted]

361

WEEKLY MASS BALANCES

CLEARWELL

Clearv ell

OVERALL BALANCE					
		(tons/week)			
Stream No.	Stream Description	Solids	Water	Gas	Total
	INPUT				
101	Dry Waste & Soil Removal	587	176		763
102	Wet Waste Removal	240	764		1004
103	Large Debris Removal	8	13		21
	Waste Water Drainage to Pit	0	183		183
	TOTAL	834	1136	0	1970
	OUTPUT				
104	Large Non-Processable Debris	4	6		11
108	Drainage Water to Clearwell	0	183		183
201	Storage Pile Drainage to BSL	0	20		20
212	Derbies to Disposal	1	1		2
312	Offgas to Scrubber	11	707		717
506	Waste to Off-Site Disposal	819	219		1038
	TOTAL	834	1136	0	1970

NOTE: Stream 212 includes derbies, small and large pieces or uranium, crop tops, etc., along with the excess waste that is diverted with these materials during detection. In actuality, derbies are a small part of this stream.

Waste Retrieval SK-F-03909					
		(tons/week)			
Stream No.	Stream Description	Solids	Water	Gas	Total
	INPUT				
101	Dry Waste & Soil Removal	587	176	0	763
102	Wet Waste Removal	240	764	0	1004
103	Large Debris Removal	8	13	0	21
	Water Drained from Waste	0	183	0	183
	TOTAL	834	1136	0	1970
	OUTPUT				
101	Dry Waste & Soil Removal	587	176	0	763
102	Wet Waste Removal	240	764	0	1004
104	Large Non-Processable Debris	4	6	0	11
105	Large Proc. Debris to Mng't	4	6	0	11
108	Waste Water Drainage to Pit	0	183	0	183
	TOTAL	834	1136	0	1970

[redacted]

364

Clearwell

Waste Preparation SK-F-03910					
		(tons/week)			
Stream No.	Stream Description	Solids	Water	Gas	Total
	INPUT				
101	Dry Waste & Soil Removal	587	176	0	763
102	Wet Waste Removal	240	764	0	1004
105	Large Proc. Debris to Mng't	4	6	0	11
	TOTAL	830	947	0	1777
	OUTPUT				
201	Storage Pile Drainage to BSL	0	20	0	20
211	Debris to Railcar Loading	2	3	0	6
212	Derbies to Disposal	1	1	0	2
214	Waste to Twin Auger Mixer	45	67	0	112
215	Wet Waste to Dryer	504	756	0	1260
216	Dry Waste & Soil to Blending	266	80	0	346
218	Shredded Material to Blending	12	18	0	31
	TOTAL	830	947	0	1777

NOTE: Stream 212 includes derbies, small and large pieces or uranium, crop tops, etc., along with the excess waste that is diverted with these materials during detection. In actuality, derbies are a small part of this stream.

365

CLEARWELL

Drying and Off-Gas Treatment Sheet 1 of 2 (SK-F-03911)					
		(tons/week)			
Stream No.	Stream Description	Solid	Liquid	Gas	Total
	INPUT				
214	10-day storage to twin auger	18	28	0	46
215	10-day storage to dryer	504	756	0	1260
301	Sweep air	0	0	288	288
303	Combustion air (Total)	0	0	2932	2932
304	Natural Gas	0	0	77	77
307	Cooling Air	0	0	5718	5718
	TOTAL	522	784	9015	10321
	OUTPUT				
309	Furnace OG discharge	0	0	8727	8727
312	Process OG to scrubber	14	1	994	1008
315	Dryer product from mix	509	77	0	586
	TOTAL	522	78	9721	10321

Notes:

1. 706 tons/week of liquid components vaporize to form gases

[redacted]

366

CLEARWELL

Drying and Off-Gas Treatment Sheet 2 of 2 (SK-F-03956)					
		(tons/week)			
Stream No.	Stream Description	Solid	Liquid	Gas	Total
	INPUT				
312	OG to scrubber	14	1	994	1008
416	Scrubber water make-up	0	1252	0	1252
417	Scrubber caustic supply	0	2	0	2
	TOTAL	14	1255	994	2262
	OUTPUT				
	Removed by MEPA and HEPA	0.4			0.4
409	OG to atmosphere	0	0	286	286
415	Wastewater to collection tank	13	1305	0	1318
419	Condensate to recycle tank	0	658	0	658
	TOTAL	14	1962	286	2262

Notes:

1. 706 tons/week of gas are condensed to liquid
2. Small (1 ton/week) differences are due to round-off errors

Dried Waste Blending and Loadout SK-F-03913					
		(tons/week)			
Stream No.	Stream Description	Solids	Water	Gas	Total
	INPUT				
211	Debris to Railcar Loading	2	3	0	6
216	Dry Waste & Soil to Blending	266	80	0	346
218	Shredded Material to Blending	12	18	0	31
315	Product from Twin Auger Mixer	538	117	0	655
	TOTAL	819	219	0	1038
	OUTPUT				
506	Product to Off-Site Disposal	819	219	0	1038
	TOTAL	819	219	0	1038

[redacted]

368

Process Flow Diagrams

Drawing No.	Title	Revision	Date
SK-F-03909	Process Process Flow Diagrams Waste Retrieval	E	3/20/96
SK-F-03910	Process Process Flow Diagrams Waste Preparation	G	3/20/96
SK-F-03911	Process Process Flow Diagrams Drying & Offgas Treatment Sheet 1 of 2	E	3/20/96
SK-F-03956	Process Process Flow Diagrams Drying & Offgas Treatment Sheet 2 of 2	D	3/20/96
SK-F-03913	Process Process Flow Diagrams Dried Waste Blending & Loadout	F	3/20/96
SK-F-04084	Process Block Flow Diagram OU1 Water Balance	C	3/20/96

P:\oudata\ou1\po145\review

~~235~~

2038

Process Flow Diagrams

skf03909.m po145@ws306. Fri Mar 15 13:49:54 CST 1996

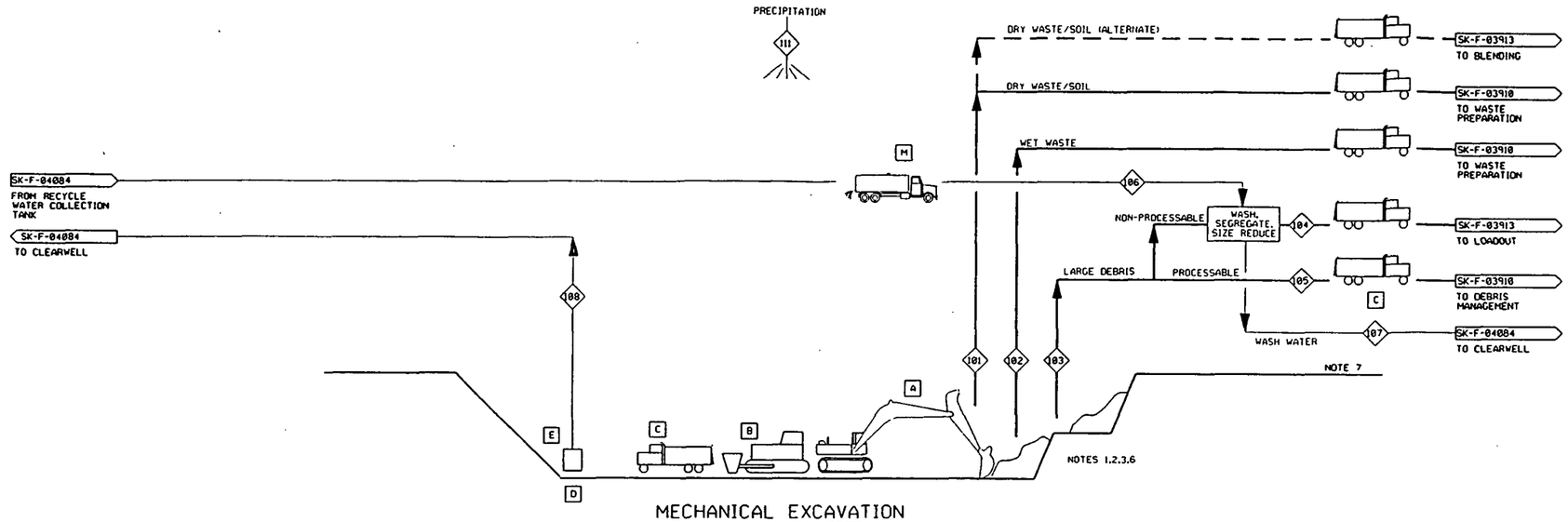

MECHANICAL EXCAVATION

(ALL PITS)

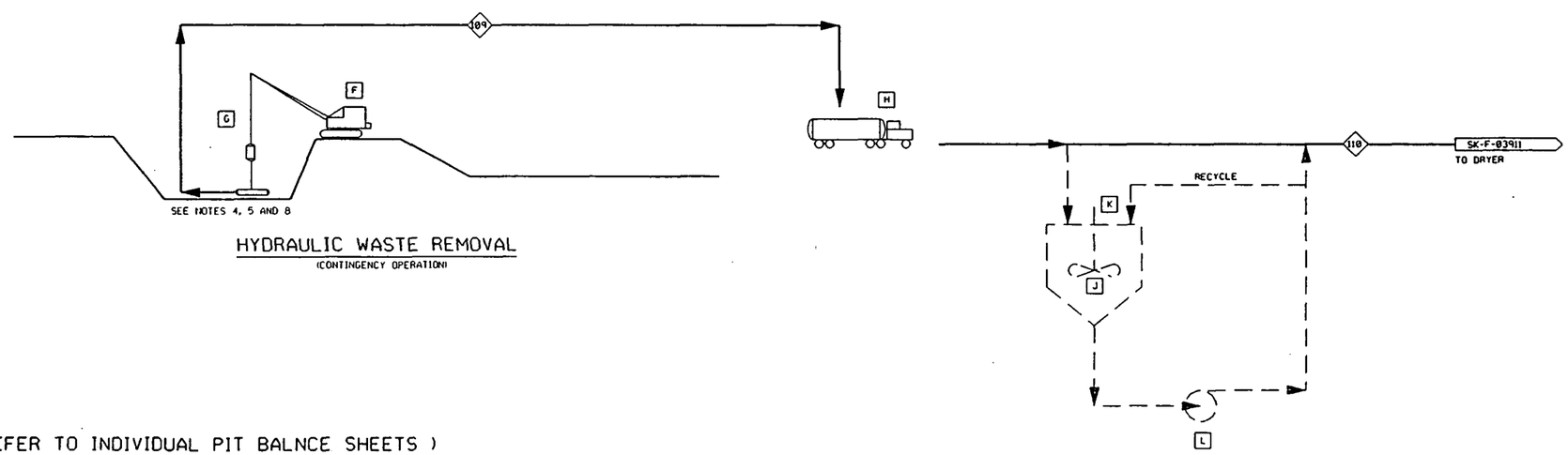

HYDRAULIC WASTE REMOVAL

(CONTINGENCY OPERATION)

(REFER TO INDIVIDUAL PIT BALNCE SHEETS)

STREAM NO.	101	102	103	104	105	106	107	108	109	110	111
COMPONENT	DR WASTE & SOIL REMOVAL	WET WASTE REMOVAL	LARGE DEBRIS REMOVAL	LG NON-PROC. DEBRIS	LARGE PROC. DEBRIS	WASH WATER SUPPLY	WASH WATER TO CLRWELL	PIT EXCAVAT'N WATER	SLURRY TO TANKER	SLURRY TO DRYER	PRECIP TO PITS
OPERATING TIME (hrs/day)	8	8	8	8	8	INTERMIT	INTERMIT	INTERMIT	INTERMIT	INTERMIT	INTERMIT
OPERATING TIME (days/wk)	5	5	5	5	5						
SOLIDS (lbs/hr)											
WATER/LIQUIDS (lbs/hr)											
WATER VAPOR (lbs/hr)											
AIR/GAS (lbs/hr)											
MASS FLOW (lbs/hr)											
VOLUME FLOW (scfm)											
TEMPERATURE (F)											
HEAT CONTENT (BTU/hr)											
NOTES											

NOTES

1. UNHANDLEABLE ITEMS SUCH AS LONG BEAMS MAY BE SIZE REDUCED AND WASHED AS REQUIRED AT THE PIT SITE FOR MORE EFFICIENT HANDLING AND TRANSFER.
2. IF WET, STICKY WASTE IS ENCOUNTERED DURING EXCAVATION, MIXING OF DRY SOILS OR CAP MATERIAL WITH THE WASTE WILL BE REQUIRED TO MAKE IT MORE HANDLEABLE.
3. EXCAVATION IS ILLUSTRATED IN GENERALIZED FORM, AND AS A CONCEPT ONLY. IT SHALL BE ADJUSTED AS THE FINAL EXCAVATION PLAN IS DEVELOPED.
4. STORMWATER COLLECTION PUMP PRESENT FOR THIS OPERATION ALSO.
5. PRECIPITATION RATE TO THIS OPERATION IS THE SAME AS SHOWN IN STREAM 111.
6. EXCAVATION ACTIVITIES DEPICTED AS IF STREAMS 101, 102 AND 103 TAKE PLACE SIMULTANEOUSLY.
7. EXCAVATION ACTIVITIES AND EQUIPMENT SHOWN AT BOTTOM OF PIT ALSO TYPICAL FOR TOP OF PITS.
8. SLURRY HYDRAULIC REMOVAL IS A CONTINGENCY ONLY, IN THE EVENT MECHANICAL EXCAVATION IS NOT POSSIBLE.

2038

MAJOR EQUIPMENT LIST

MARK	QUANTITY	EQUIPMENT NAME
A	2	LONG REACH EXCAVATOR
B	2	TRACK-TYPE LOADER
C	4	DUMP TRUCK
D	1	DRAINAGE WATER COLLECTION SUMP
E	1	DRAINAGE WATER COLLECTION PUMP
F	1	BOOM CRANE
G	1	SLURRY PUMP
H	1	TANKER TRUCK (W/AGITATOR AND DISCHARGE PUMP)
J	1	SLURRY SURGE TANK (FUTURE)
K	1	SLURRY SURGE TANK AGITATOR (FUTURE)
L	2	SLURRY SURGE TANK PUMP (FUTURE)
M	1	WATER TRUCK AND UNLOADING PUMP

LEGEND

— — — — FUTURE

REF DWG NO.	DRAWING TITLE
SK-F-03910	WASTE PREPARATION
SK-F-03911	DRYING AND OFF-GAS TREATMENT SHEET 1 OF 2
SK-F-03913	DRIED WASTE BLENDING AND LOADOUT
SK-F-04084	OU1 WATER BALANCE

PRELIMINARY

NOT FOR CONSTRUCTION

REV. NO.	ISSUE OR REVISION PURPOSE - DESCRIPTION	A-E	FERNCO	DATE
E	ISSUED FOR EPA SUBMITTAL PRE-FINAL DESIGN		-	3/28/96
D	ISSUED FOR EPA SUBMITTAL PRE-FINAL DESIGN		-------	
C	ISSUED FOR CONCEPTUAL DESIGN (CLIENT COMMENTS INCORPORATED)			
B	ISSUED FOR CONCEPTUAL DESIGN			10/23/95
A	ISSUED FOR CONCEPTUAL DESIGN		N/A	

INITIALS AND DATE

UNITED STATES DEPARTMENT OF ENERGY

FERNALD ENVIRONMENTAL MANAGEMENT PROJECT

THIS DRAWING PREPARED BY

PARSONS

THE RALPH M. PARSONS CO. - PARSONS MAIN, INC. - ENGINEERING-SCIENCE, INC.
CINCINNATI, OHIO

PROJECT NAME

OU1 REMEDIATION SYSTEM DESIGN

DRAWING TITLE

PROCESS
PROCESS FLOW DIAGRAM
WASTE RETRIEVAL

DRAWN BY	DATE	LEAD ENGINEER	DATE	CHECKED BY	DATE
P. A. WILSON	5/31/95			S. C. YANLER	7/19/95

PLANT/BLDG. NO. | FLOOR | SCALE: NONE | CLASS

SUBMITTED FOR APPROVAL: A-E | DATE

FERNCO CRU APPROVAL: N/A | DATE

N/A

A-E PROJECT NO.	TEMP PROJECT NO.	DRAWING INDEX CODE NO.	SHEET NO.	REV. NO.
	WBS 1.1.1.1.1.3.1 00-90701	SK-F-03909	F0001	E

PREPARED UNDER PARSONS PROJECT ORDER NUMBER: WPRAP/PO-145

370

[redacted]

skf03910.m po145@ws306. Fri Mar 15 14:00:03 CST 1996

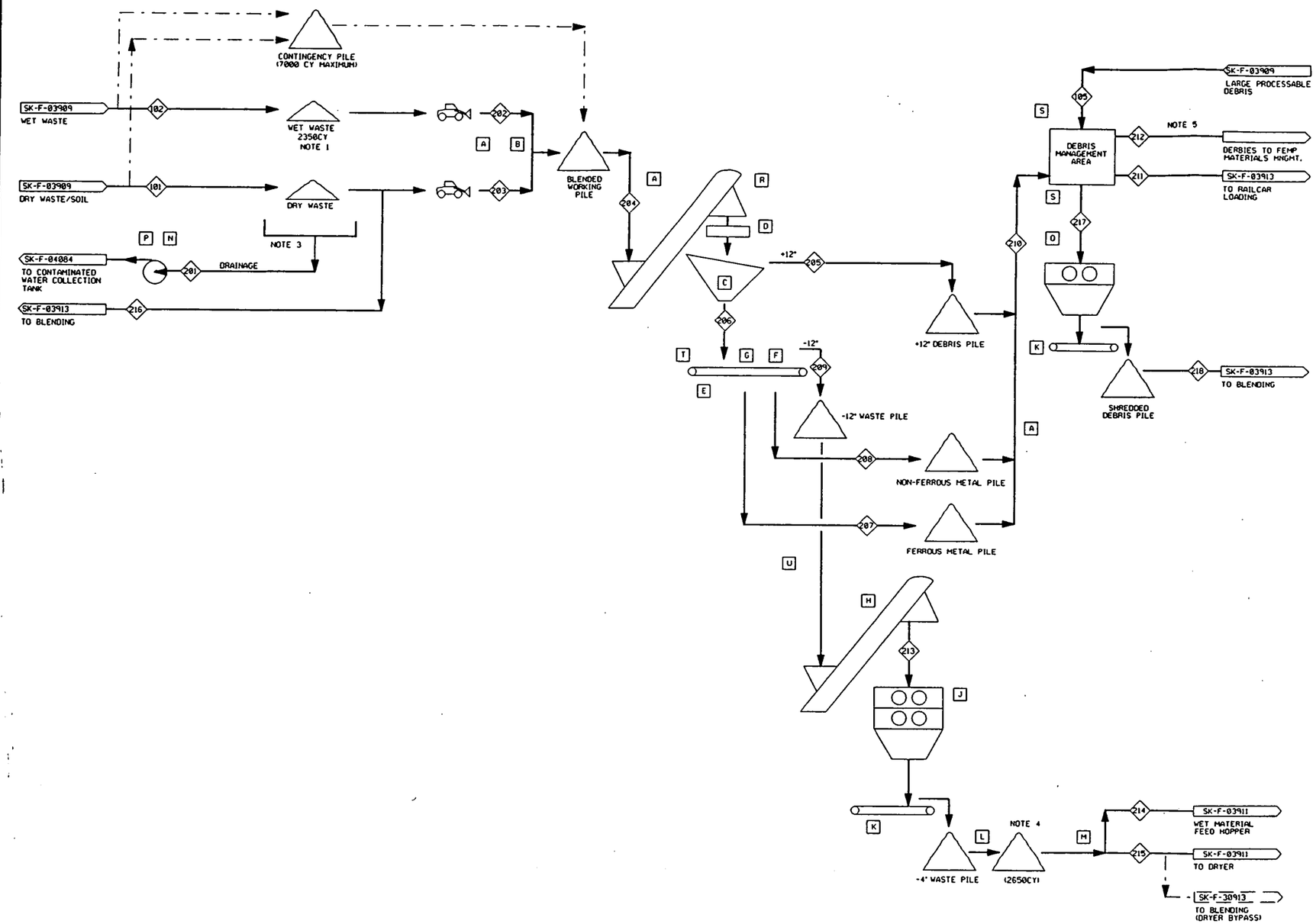

(REFER TO INDIVIDUAL PIT BALANCE SHEET)

STREAM NO.	101	102	105	201	202	203	204	205	206	207	208	209
COMPONENT	DR WASTE & SOIL REMOVAL	WET WASTE REMOVAL	LARGE PROC. DEBRIS	DRAINAGE FROM PIT WASTE	WET WASTE MIXING	DRY WASTE MIXING	BLENDED WASTE TO GRIZZLY	GRIZZLY +12" OVERSIZE	GRIZZLY -12" U SIZE	FERROUS REMOVAL	METAL REMOVAL	FINAL CONVEYOR D'CHARGE
OPERATING TIME (hrs/day)	8	8	8	INTERMIT	16	16	16	16	16	16	16	16
OPERATING TIME (days/wk)	5	5	5	INTERMIT	5	5	5	5	5	5	5	5
SOLIDS (lbs/hr)												
WATER/LIQUIDS (lbs/hr)												
WATER VAPOR (lbs/hr)												
AIR/GAS (lbs/hr)												
MASS FLOW (lbs/hr)												
VOLUME FLOW (scfm)												
TEMPERATURE (F)												
HEAT CONTENT (BTU/hr)												
NOTES												

STREAM NO.	210	211	212	213	214	215	216	217	218
COMPONENT	TOTAL TO DEBRIS MAN.	DEBRIS TO LOADOUT	DERBIES WASTE TO DISPOSAL	WASTE TO SHREDDER	2650CY STG. TO T. AUGER	2650CY STG. TO DRYER	DRY WASTE TO BLENDING	DEBRIS TO SHREDDER	SHREDDED MAT'L TO BLENDING
OPERATING TIME (hrs/day)	16	8	8	16	24	24	16	8	8
OPERATING TIME (days/wk)	5	5	5	5	7	7	5	5	5
SOLIDS (lbs/hr)									
WATER/LIQUIDS (lbs/hr)									
WATER VAPOR (lbs/hr)									
AIR/GAS (lbs/hr)									
MASS FLOW (lbs/hr)									
VOLUME FLOW (scfm)									
TEMPERATURE (F)									
HEAT CONTENT (BTU/hr)									
NOTES									

NOTES

1. THE ASSUMPTION IS MADE THAT WET WASTE WILL REQUIRE MIXING WITH DRY MATERIAL FOR HANDLING.
2. IN MANY CASES, ONE FRONT-END LOADER WILL BE USED IN MULTIPLE LOCATIONS.
3. SEPARATE SUMPS ARE PROVIDED FOR WET WASTE AND DRY WASTE PILES. THESE AND OTHER WASTEWATER STREAMS MAY FIRST BE PUMPED TO A COLLECTOR TANK BEFORE BEING PUMPED TO THE BIODENITRIFICATION SURGE LAGOON.
4. THE DRYER FEED PILE IS SAMPLED BEFORE FURTHER PROCESSING. MATERIAL FAILING TESTING IS REWORKED WITH IN COMING WASTE.
5. THIS STREAM INCLUDES DERBIES, SMALL AND LARGE PIECES OF URANIUM, CROP TOPS, ETC., ALONG WITH THE EXCESS WASTE DIVERTED WITH THESE MATERIALS DURING DETECTION. IN ACTUALITY, TOTAL DERBIES ARE A SMALL PART OF THIS STREAM.

~~285~~ 2038

MAJOR EQUIPMENT LIST

MARK	QUANTITY	EQUIPMENT NAME
A	1	FRONT END LOADER
B	1	DOZER
C	1	VIBRATING 12" GRIZZLY
D	1	APRON FEEDER
E	1	GRIZZLY UNDERSIZE CONVEYOR
F	1	METAL DETECTOR
G	1	MAGNETIC BELT CONVEYOR
H	1	SHREDDER SKIP HOIST
J	1	PROCESS SHREDDER
K	1	PROCESS SHREDDER DISCHARGE CONVEYOR
L	1	FRONT END LOADER
M	1	HYDRAULIC EXCAVATOR
N	1	SUMP PUMP
P	1	SUMP
O	1	DEBRIS SHREDDER
R	1	APRON FEEDER SKIP HOIST
S	1	BACKHOE W/GRAPPLE
T	3	LUMP BREAKER
U	1	FRONT END LOADER

LEGEND

— - — - — INTERMITTENT

REF DWG NO.	DRAWING TITLE
SK-F-03909	WASTE RETRIEVAL
SK-F-03911	DRYING AND OFF-GAS TREATMENT SHEET 1 OF 2
SK-F-03913	DRIED WASTE BLENDING AND LOADOUT
SK-F-04084	OU1 WATER BALANCE

PRELIMINARY
NOT FOR CONSTRUCTION

REV. NO.	ISSUE OR REVISION PURPOSE - DESCRIPTION	A-E	FEMCO	DATE
G	ISSUED FOR EPA SUBMITTAL PRE-FINAL DESIGN			3/28/95
F	INCORPORATED FERMCO COMMENTS			
E	ISSUED FOR EPA SUBMITTAL PRE-FINAL DESIGN			
D	ISSUED FOR CONCEPTUAL DESIGN (CLIENT COMMENTS INCORPORATED)			
C	ISSUED FOR CONCEPTUAL DESIGN (CLIENT COMMENTS INCORPORATED)			10/23/95
B	ISSUED FOR CONCEPTUAL DESIGN			
A	ISSUED FOR CONCEPTUAL DESIGN		N/A	

INITIALS AND DATE

UNITED STATES
DEPARTMENT OF ENERGY
FERNALD ENVIRONMENTAL MANAGEMENT PROJECT

THIS DRAWING PREPARED BY
PARSONS
THE RALPH M. PARSONS CO. - PARSONS MAIN, INC. - ENGINEERING-SCIENCE, INC.
CINCINNATI, OHIO

PROJECT NAME
OU1 REMEDIATION SYSTEM DESIGN

DRAWING TITLE
PROCESS
PROCESS FLOW DIAGRAM
WASTE PREPARATION

DRAWN BY	DATE	LEAD ENGINEER	DATE	CHECKED BY	DATE
P. A. WILSON	6/8/95			S. C. YAGLER	7/19/95

PLANT/BLDG NO.	FLOOR	SCALE	CLASS
		NONE	

SUBMITTED FOR APPROVAL	FEMCO CRU APPROVAL	
	N/A	N/A

A-E PROJECT NO.	DATE	FEMP PROJECT NO.	DRAWING INDEX CODE NO.	DATE	SHEET NO.	REV. NO.
		VBS 1.1.1.1.1.3.1 00-90701	SK-F-03910		[redacted]	[redacted]

371

PREPARED UNDER PARSONS PROJECT ORDER NUMBER
WPRAP/PO-145

skf03911.m po145@ws306. Fri Mar 15 14:12:53 CST 1996

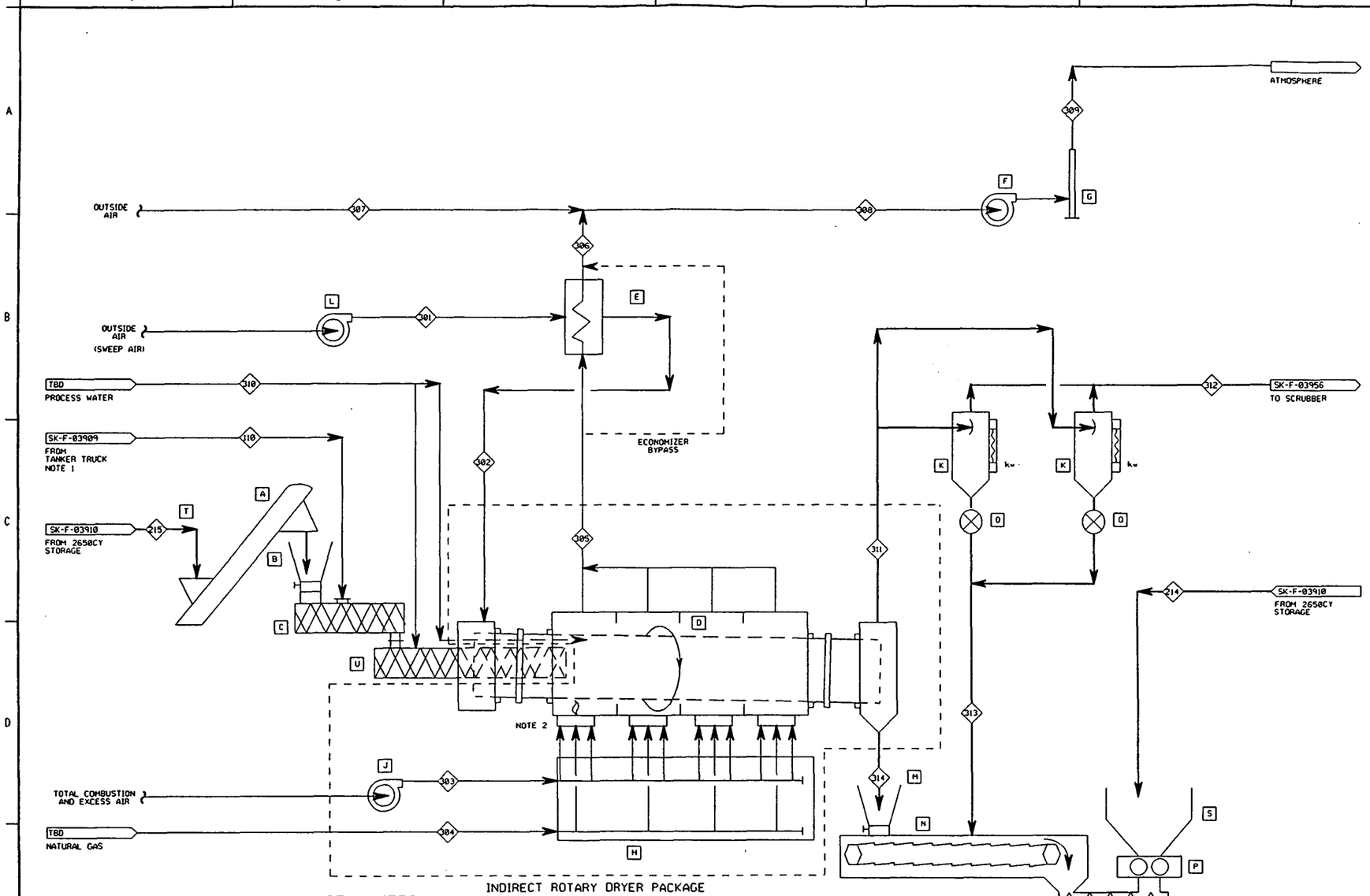

(REFER TO INDIVIDUAL PIT BALANCE SHEETS)

STREAM NO.	110	214	215	301	302	303	304	305	306	307	308	309	310	311	312	313	314	315
COMPONENT	SLURRY TO DRYER	2650CY STG. TO T. AUGER	2650CY STG. TO DRYER	AMBIENT AIR TO ECON'R 1	HOT SWEEP AIR	TOTAL AIR TO BURNERS	TOT. NAT GAS TO BURNERS	FURNACE OG TO ECON'R	FURNACE OG FROM ECON'R	COOLING AIR	FURNACE OG TO FAN	FURNACE OG D'CHARGE	PROCESS WATER TO CLEAN	PROCESS OG TO CYCLONE	PROCESS OG TO SCRUBBER	CYCLONE SOLIDS	DRYER PRODUCT TO MIX	DRYER PRODUCT FROM MIX
OPERATING TIME (hrs/day)	INTERMIT	24	24	24	24	24	24	24	24	24	24	24	INTERMIT	24	24	24	24	24
OPERATING TIME (days/wk)		7	7	7	7	7	7	7	7	7	7	7		7	7	7	7	7
SOLIDS (TOTAL) (lbs/hr)																		
LIQUIDS (TOTAL) (lbs/hr)																		
H_2O (lbs/hr)																		
NaOH (lbs/hr)																		
OTHER SALTS (TOTAL) (lbs/hr)																		
ORGANICS (lbs/hr)																		
GAS (TOTAL) (lbs/hr)																		
H_2O (lbs/hr)																		
N_2 (lbs/hr)																		
O (lbs/hr)																		
NO_2 (lbs/hr)																		
CO_2 (lbs/hr)																		
HF (lbs/hr)																		
NH_3 (lbs/hr)																		
Rn (pCi/L)																		
OTHER (lbs/hr)																		
TOTAL MASS FLOW (lbs/hr)																		
GAS FLOW (scfm)																		
GAS FLOW (acfm)																		
TEMPERATURE (F)																		
PRESSURE (in WC)																		
DESIGN FLOW (acfm)																		
HEAT CONTENT (BTU/hr)																		
NOTES																		

NOTES

1. AS A CONTINGENCY, SLURRY WILL BE FED TO THE DRYER ALONG WITH THE WASTE FROM THE DRYER FEED HOPPER.
2. THE SCHEMATIC INDICATES ONE SET OF BURNERS PER ZONE. TOTAL BURNERS PER ZONE AND TOTAL NUMBER OF ZONES IS TO BE DETERMINED BY THE VENDOR. BURNER ARRANGEMENT SHOWS INTAKES FOR NATURAL GAS, PRIMARY COMBUSTION AIR AND SECONDARY (COMBUSTION AND EXCESS) AIR. SECONDARY COMBUSTION AIR IS REQUIRED IF THE BURNERS ARE TO BE OPERATED AS STAGED COMBUSTION FOR LOWER NOX CONCENTRATIONS.

~~235~~
2038

MAJOR EQUIPMENT LIST

MARK	QUANTITY	EQUIPMENT NAME
A	1	DRYER SKIP HOIST
B	1	DRYER FEEDER HOPPER
C	1	DRYER FEEDER
D	1	INDIRECT ROTARY DRYER
E	1	HEAT ECONOMIZER
F	1	COMBUSTION GAS EXHAUST FAN
G	1	COMBUSTION GAS STACK
H	1	BURNER PIPE & INSTRUMENTATION SKID
J	1	COMBUSTION AIR SUPPLY FAN
K	2 SETS	CYCLONE WITH ELECTRIC HEAT
L	1	AIR SUPPLY FAN
M	1	DRYER DISCHARGE HOPPER
N	1	DRYER DISCHARGE CONVEYOR
P	1	WET MATERIAL FEED CONVEYOR
Q	2	ROTARY AIRLOCK
R	1	TWIN AUGER MIXER
S	1	WET MATERIAL FEED HOPPER
T	1	FRONT END LOADER
U	1	DRYER FEED CONVEYOR

REF DWG NO.	DRAWING TITLE
SK-F-03909	WASTE RETRIEVAL
SK-F-03910	WASTE PREPARATION
SK-F-03956	DRYING AND OFF-GAS TREATMENT SHEET 2 OF 2
SK-F-03913	DRIED WASTE BLENDING AND LOADOUT

PRELIMINARY
NOT FOR CONSTRUCTION

REV. NO.	ISSUE OR REVISION PURPOSE - DESCRIPTION	A-E	FERNCO	DATE
E	ISSUED FOR EPA SUBMITTAL PRE-FINAL DESIGN			3/28/96
D	ISSUED FOR EPA SUBMITTAL PRE-FINAL DESIGN			
C	ISSUED FOR CONCEPTUAL DESIGN (CLIENT COMMENTS INCORPORATED)			
B	ISSUED FOR CONCEPTUAL DESIGN			10/23/95
A	ISSUED FOR CONCEPTUAL DESIGN		N/A	

INITIALS AND DATE

UNITED STATES
DEPARTMENT OF ENERGY
FERNALD ENVIRONMENTAL MANAGEMENT PROJECT

THIS DRAWING PREPARED BY
PARSONS
THE RALPH M. PARSONS CO. - PARSONS MAIN, INC. - ENGINEERING-SCIENCE, INC.
CINCINNATI, OHIO

PROJECT NAME
OU1 REMEDIATION SYSTEM DESIGN

DRAWING TITLE
PROCESS
PROCESS FLOW DIAGRAM
DRYING AND OFF-GAS TREATMENT SHEET 1 OF 2

DRAWN BY	DATE	LEAD ENGINEER	DATE	CHECKED BY	DATE
P. A. WILSON	6/01/95			S. C. VAALER	7/19/95

PLANT/BLDG NO.	FLOOR	SCALE	CLASS
		NONE	

SUBMITTED FOR APPROVAL	FERNCO CRU APPROVAL	
	N/A	N/A

PREPARED UNDER PARSONS PROJECT ORDER NUMBER	A-E DATE	DOE PROJECT NO.	TEMP PROJECT NO.	DRAWING INDEX CODE NO.	SHEET NO.	REV. NO.
WPRAP/P0145			WBS 1.1.1.1.1.3.1 00-90701	SK-F-03911	F0003	E

372

skf03956.m po145@ws306. Fri Mar 15 14:19:07 CST 1996

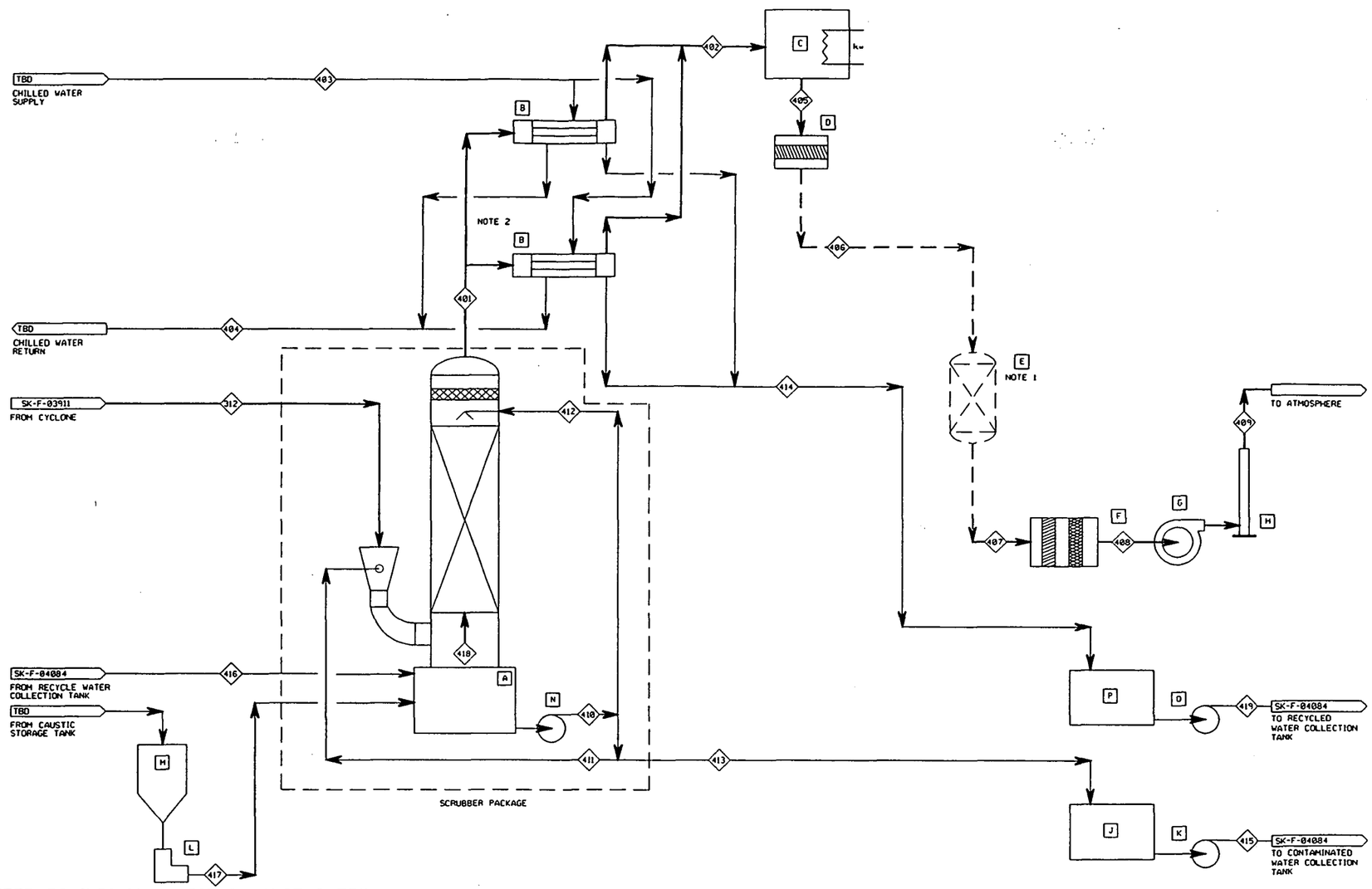

(REFER TO INDIVIDUAL PIT BALANCE SHEET)

STREAM NO.	312	401	402	403	404	405	406	407	408	409	410
COMPONENT	OFFGAS TO SCRUBBER	OFFGAS TO CONDEN'R	OFFGAS TO REHEATER	CHILLED WATER TO CONDEN'R	CHILLED WTR. FROM CONDEN'R	OFFGAS TO HEPA	OFFGAS TO CARBN BEDS	OFFGAS TO HEPA FILTER	OFFGAS TO FAN	OFFGAS TO ATMOSPHE	TOTAL SCRUBBER D'CHARGE
OPERATING TIME (hrs/day)	24	24	24	24	24	24	24	24	24	24	24
OPERATING TIME (days/wk)	7	7	7	7	7	7	7	7	7	7	7
SOLIDS (TOTAL) (lbs/hr)											
LIQUIDS (TOTAL) (lbs/hr)											
H_2O (lbs/hr)											
NaOH (lbs/hr)											
Salts (TOTAL) (lbs/hr)											
ORGANICS (lbs/hr)											
GAS (TOTAL) (lbs/hr)											
H_2O (lbs/hr)											
N_2 (lbs/hr)											
O_2 (lbs/hr)											
NO_2 (lbs/hr)											
CO_2 (lbs/hr)											
HF (lbs/hr)											
NH_3 (lbs/hr)											
Rn (pCi/L)											
OTHER (lbs/hr)											
TOTAL MASS FLOW (lbs/hr)											
GAS FLOW (acfm)											
GAS FLOW (scfm)											
LIQUID FLOW (gpm)											
TEMPERATURE (F)											
PRESSURE (in. WC.)											
DESIGN FLOW (scfm)											
HEAT CONTENT (BTU/hr)											
NOTES											

STREAM NO.	411	412	413	414	415	416	417	418	419
COMPONENT	VENTURI RECYCLE	PACKED TOWER RECYCLE	SCRUBBER BLEED	CONDENSA TO TRANS TANK	SCRUBBER BLEED TANK	SCRUBBER MAKE-UP WATER	SCRUBBER CAUSTIC SUPPLY	VENTURI OFFGAS	COND. TO RECYCLE TANK
OPERATING TIME (hrs/day)	24	24	24	24	24	24	24	24	24
OPERATING TIME (days/wk)	7	7	7	7	7	7	7	7	7
SOLIDS (TOTAL) (lbs/hr)									
LIQUIDS (TOTAL) (lbs/hr)									
H_2O (lbs/hr)									
NaOH (lbs/hr)									
Salts (TOTAL) (lbs/hr)									
ORGANICS (lbs/hr)									
GAS (TOTAL) (lbs/hr)									
H_2O (lbs/hr)									
N_2 (lbs/hr)									
O_2 (lbs/hr)									
NO_2 (lbs/hr)									
CO_2 (lbs/hr)									
HF (lbs/hr)									
NH_3 (lbs/hr)									
Rn (pCi/L)									
OTHER (lbs/hr)									
TOTAL MASS FLOW (lbs/hr)									
GAS FLOW (acfm)									
GAS FLOW (scfm)									
LIQUID FLOW (gpm)									
TEMPERATURE (F)									
PRESSURE (in. WC.)									
DESIGN FLOW (scfm)									
HEAT CONTENT (BTU/hr)									
NOTES									

NOTES

1. CARBON BED FOR RADON REMOVAL (SHOWN WITH DOTTED LINE) FOR FUTURE CONSIDERATION ONLY. IT IS NOT CONSIDERED IN THE CURRENT MATERIAL AND HEAT BALANCES.
2. HEAT EXCHANGERS INSTALLED IN PARALLEL. EACH WITH 50% OF THE TOTAL REQUIRED CAPACITY.

~~225~~
2038

MAJOR EQUIPMENT LIST

MARK	QUANTITY	EQUIPMENT NAME
A	1	CAUSTIC SCRUBBER W/VENTURI AND MIST ELIMINATOR
B	2	OFFGAS CONDENSER
C	1	OFFGAS REHEATER ELECTRIC
D	2	HEPA FILTER (ONE STAND BY)
E	2 SETS	CARBON BED (ONE STAND BY) (FUTURE)
F	2	HEPA W/PREFILTERS (ONE STAND BY)
G	2	OFFGAS EXHAUST FAN (ONE STAND BY)
H	1	OFFGAS STACK
J	1	WASTEWATER TRANSFER TANK
K	2	WASTEWATER TRANSFER TANK PUMP (ONE STAND BY)
L	2	CAUSTIC SUPPLY PUMP (ONE STAND BY)
M	1	CAUSTIC DAY TANK
N	2	CAUSTIC SRUBBER PUMP (ONE STAND BY)
P	1	CONDENSATE TRANSFER TANK
O	2	CONDENSATE TRANSFER PUMP (ON STAND BY)

REF DWG NO.	DRAWING TITLE
SK-F-03911	DRYING AND OFF-GAS TREATMENT SHEET 1 OF 2
SK-F-04084	OU1 WATER BALANCE

PRELIMINARY
NOT FOR CONSTRUCTION

REV. NO.	ISSUE OR REVISION PURPOSE - DESCRIPTION	A-E INITIALS	FERMCO INITIALS	DATE
D	ISSUED FOR EPA SUBMITTAL PRE-FINAL DESIGN			3/28/96
C	INCORPORATED FERMCO COMMENTS			
B	ISSUED FOR EPA SUBMITTAL PRE-FINAL DESIGN			
A	ISSUED FOR CONCEPTUAL DESIGN		N/A	

UNITED STATES DEPARTMENT OF ENERGY
FERNALD ENVIRONMENTAL MANAGEMENT PROJECT

THIS DRAWING PREPARED BY
PARSONS
THE RALPH M. PARSONS CO. - PARSONS MAIN, INC. - ENGINEERING-SCIENCE, INC.
CINCINNATI, OHIO

PROJECT NAME
OU1 REMEDIATION SYSTEM DESIGN

DRAWING TITLE
PROCESS
PROCESS FLOW DIAGRAM
DRYING AND OFF-GAS TREATMENT SHEET 2 OF 2

DRAWN BY	DATE	LEAD ENGINEER	DATE	CHECKED BY	DATE
P. A. WILSON	6/01/95			S. C. VANLER	7/19/95

PLANT/BLDG. NO.	FLOOR	SCALE	CLASS
		NONE	

SUBMITTED FOR APPROVAL	FERMCO CRU APPROVAL
N/A	N/A

A-E PROJECT NO.	DATE	TEMP PROJECT NO.	DRAWING SHEET CODE NO.	SHEET NO.	REV. NO.
		WBS 1.1.1.1.3.1 00-90701	SK-F-03956	F0004	D

PREPARED UNDER PARSONS PROJECT ORDER NUMBER
WPRAP/PO-145

373

skf03913.m po145@ws306. Fri Mar 15 14:21:07 CST 1996

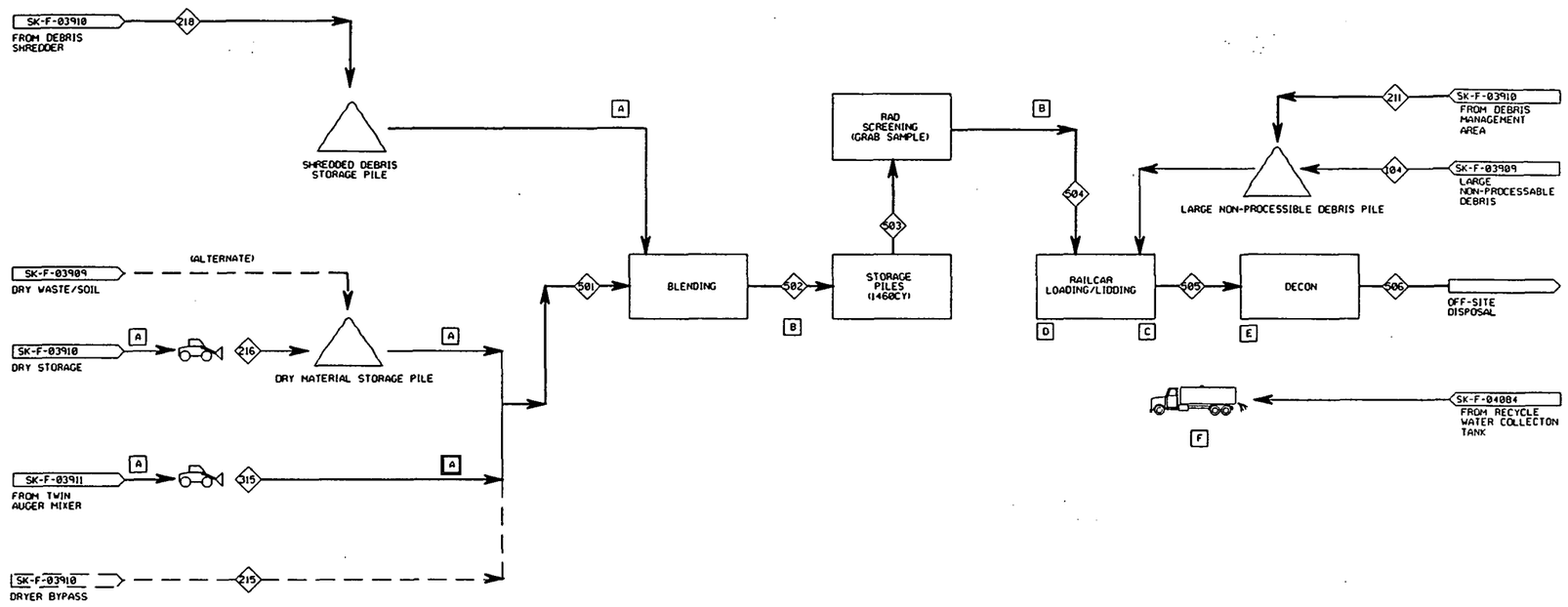

(REFER TO INDIVIDUAL PIT BALANCE SHEETS)

STREAM NO.		104	211	215	216	218	315	501	502	503	504	505	506
COMPONENT		LG NON-PROC. DEBRIS	FROM DEBRIS MANAGE.	DRYER BYPASS	DRY WASTE TO BLENDING	FROM DEBRIS SHREDDER	DRIED PROD. TO BLENDING	MIXED MAT'L TO BLENDING	MIXED MAT'L TO STORAGE	MIXED MAT'L TO SCREENING	MIXED MAT'L TO LOADING	TOTAL TO DECON	TO OFF-SITE DISPOSAL
OPERATING TIME	(hrs/day)	8	8	INTERMIT	16	8	24	8	8	8	8	8	8
OPERATING TIME	(days/wk)	5	5	INTERMIT	5	5	7	5	5	5	5	5	5
SOLIDS	(lbs/hr)												
WATER/LIQUIDS	(lbs/hr)												
WATER VAPOR	(lbs/hr)												
AIR/GAS	(lbs/hr)												
MASS FLOW	(lbs/hr)												
VOLUME FLOW	(scfm)												
TEMPERATURE	(F)												
HEAT CONTENT	(BTU/hr)												
NOTES													

NOTES

2038

MAJOR EQUIPMENT LIST

MARK	QUANTITY	EQUIPMENT NAME
A	2	FRONT END LOADER
B	1	FRONT-END LOADER
C	1	BRIDGE CRANE
D	1 SET	TRACK SCALE
E	1	CAR MOVER
F	1	WATER TRUCK

REF DWG NO.	DRAWING TITLE
SK-F-03909	WASTE RETRIEVAL
SK-F-03910	WASTE PREPARATION
SK-F-03911	DRYING AND OFF-GAS TREATMENT SHEET 1 OF 2
SK-F-04084	OU1 WATER BALANCE

PRELIMINARY
NOT FOR CONSTRUCTION

REV. NO.	ISSUE OR REVISION PURPOSE - DESCRIPTION	A-E	FERNCO	DATE
F	ISSUED FOR EPA SUBMITTAL PRE-FINAL DESIGN			3/20/96
E	ISSUED FOR EPA SUBMITTAL PRE-FINAL DESIGN			
D	ISSUED FOR CONCEPTUAL DESIGN (CLIENT COMMENTS INCORPORATED)			
C	ISSUED FOR CONCEPTUAL DESIGN (CLIENT COMMENTS INCORPORATED)			10/23/95
B	ISSUED FOR CONCEPTUAL DESIGN			
A	ISSUED FOR CONCEPTUAL DESIGN		N/A	

INITIALS AND DATE

UNITED STATES DEPARTMENT OF ENERGY
FERNALD ENVIRONMENTAL MANAGEMENT PROJECT

THIS DRAWING PREPARED BY
PARSONS
THE RALPH M. PARSONS CO. - PARSONS MAIN, INC. - ENGINEERING-SCIENCE, INC.
CINCINNATI, OHIO

PROJECT NAME
OU1 REMEDIATION SYSTEM DESIGN

DRAWING TITLE
PROCESS
PROCESS FLOW DIAGRAM
DRIED WASTE BLENDING AND LOADOUT

DRAWN BY	DATE	LEAD ENGINEER	DATE	CHECKED BY	DATE
P.A. WILSON	6/81/95			S. C. VAALER	7/14/95

PLANT/BLDG NO. | FLOOR | SCALE: NONE | CLASS

SUBMITTED FOR APPROVAL | FERNCO CRU APPROVAL: N/A | N/A

A-E | DATE | DATE

374

PREPARED UNDER PARSONS PROJECT ORDER NUMBER	DOE PROJECT NO.	TEMP PROJECT NO.	DRAWING INDEX CODE NO.	SHEET NO.	REV. NO.
WPRAP/PO-145		VBS 1.1.1.1.1.3.1 00-90701	SK-F-03913	F0005	F

[redacted]

sk04084.m po145@ws306. Fri Mar 15 14:25:08 CST 1996

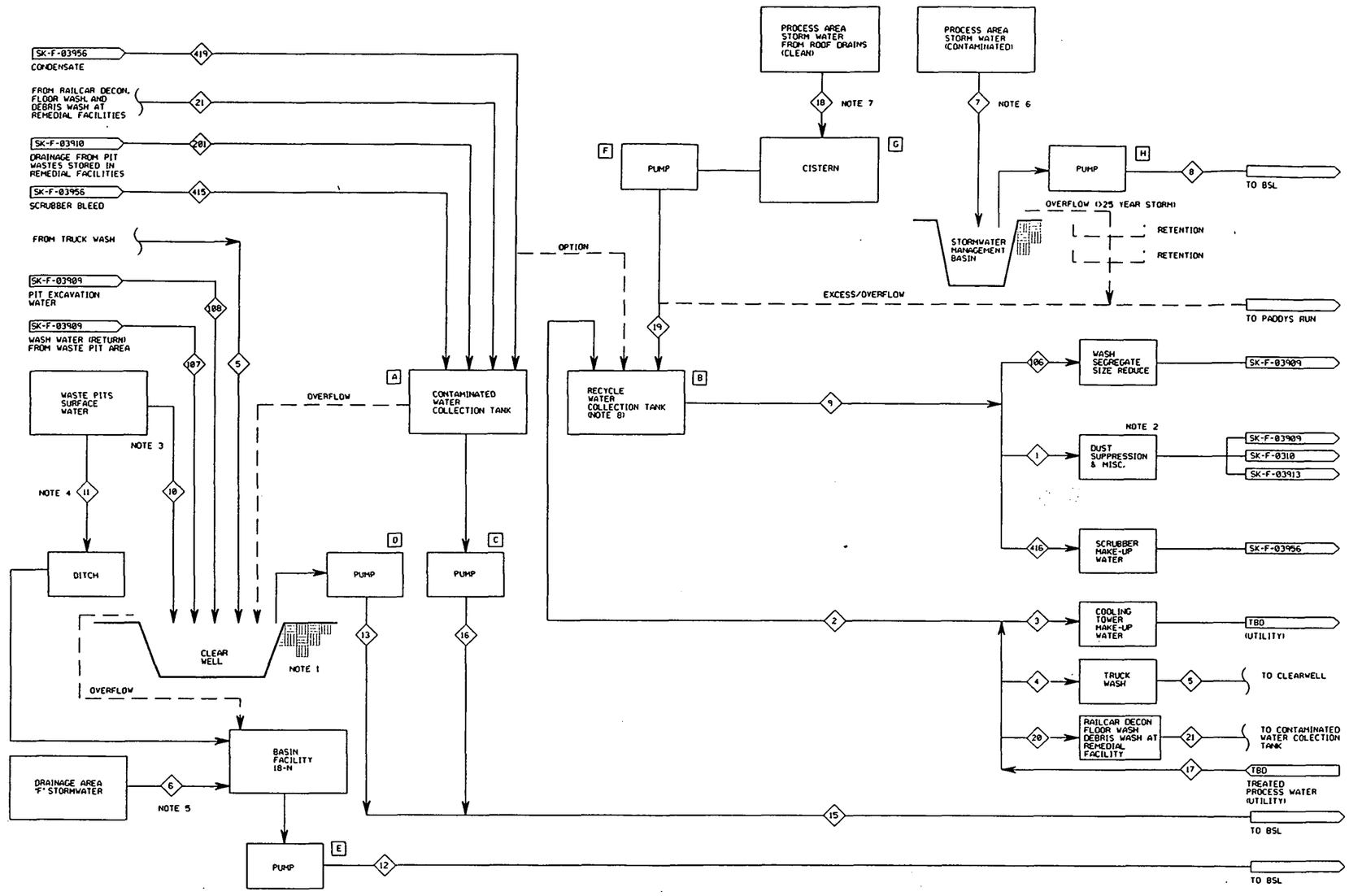

STREAM NO.		1	2	3	4	5	6	7	8	9	10	11	12	13	15
COMPONENT		TOTAL DUST SUPPR. W	RECYCLE WATER MAKE-UP	COOL.TWR WATER SUPPLY	PROCESS WATER TO TR. WASH	EFFLUENT FROM TR. WASH	AREA 'F' STORM WATER	PRO.AREA STORM W. CONTAM'D	PRO.AREA STORM W. TO BSL	RECYCLED WATER DISCH.	PIT SURF WATER TO CLRWELL	PIT SURF WATER TO DITCH	FACILITY 18-N DISCH.	CLRWELL DISCH. TO BSL	EFFLUENT TO BSL
AVG. CONDITIONS															
OPERATING TIME	hr/day	16	24	24	8	8	24	24	24	24	24	24	24	24	24
	day/yr	275	275	275	275	275	365	365	365	275	365	365	365	365	365
TOTAL MASS FLOW	lb/hr	7515	22671	20025	20025	20425	2525	8585	8585	25550	7222	13635	16160	42771	76062
SOLIDS	ppm	1100	-	-	-	19600	10000	10000	10000	1100	10000	10000	10000	16300	18100
TOTAL VOLUME FLOW	gpm	15	45.3	40	40	40.3	5	17	17	51	14.3	27.1	32.1	84.6	150.2
PEAK (DESIGN) CONDITIONS															
LENGTH OF TIME	hrs	16	24	24	8	8	24	24	64	24	24	24	12.5	10.2	12
TOTAL MASS FLOW	lb/hr	11250	42500	24030	24030	25030	73000	332500	125000	42500	469000	400000	1400000	100000	150000
SOLIDS	ppm	10000	-	-		39952	10000	10000	10000	10000	10000	10000	10000	16300	17670
TOTAL VOLUME FLOW	gpm	22.5	85	48	48	50	146	665	250	85	938	800	2800	200	300
YEARLY MASS BALANCE															
OPERATING TIME	hr/day	24	24	24	24	24	24	24	24	24	24	24	24	24	24
	day/yr	365	365	365	365	365	365	365	365	365	365	365	365	365	365
TOTAL MASS FLOW	lb/hr	3775	12597	15087	5029	5130	2525	8585	8585	15476	7222	13635	16160	23644	48913
SOLIDS	ppm	1875	22671	-	-	19600	10000	10000	10000	1875	10000	10000	10000	13660	17100
TOTAL VOLUME FLOW	gpm	7.5	25.2	30.1	10	10.1	5	17	17	30.9	14.3	27.1	32.3	46.8	96.7
NOTES															

STREAM NO.		16	17	18	19	20	21	106	107	108	201	415	416	419
COMPONENT		CONTAM'D WATER TK TO BSL	PROCESS WATER SUPPLY	PRO.AREA STORM W. CLEAN	CISTERN DISCH.	PROCESS WATER TO DECON	EFFLUENT FROM DECON	WASH WATER SUPPLY	WASH WATER TO CLRWELL	PIT EXCAVAT'N WATER	DRAINAGE FROM PIT WASTES	SCRUBBER BLEED TO TANK	SCRUBBER MAKE-UP WATER	COND. TO RECYCLE TANK
AVG. CONDITIONS														
OPERATING TIME	hr/day	24	24	24	24	24	24	16	16	24	24	24	24	24
	day/yr	365	275	365	365	275	275	275	275	365	365	275	275	275
TOTAL MASS FLOW	lb/hr	24644	71220	2879	2879	8499	8585	7515	7700	7424	758	16116	10520	7832
SOLIDS	ppm	20400	-	10000	10000	-	10000	1100	19500	10000	10000	36400	1100	-
TOTAL VOLUME FLOW	gpm	65.7	142.3	5.7	5.7	17	17	15	15.2	14.7	1.5	31.5	21	15.6
PEAK (DESIGN) CONDITIONS														
LENGTH OF TIME	hrs	16	24	24	24	24	24	16	16	4	24	24	24	24
TOTAL MASS FLOW	lb/hr	50000	103310	100000	38250	12750	12900	11250	11400	150000	1250	23650	20000	11700
SOLIDS	ppm	20400	-	10000	10000	-	10000	10000	19500	10000	10000	36400	10000	-
TOTAL VOLUME FLOW	gpm	100	207	200	77	25.5	25.8	22.5	22.8	300	2.5	47.3	40	23.4
YEARLY MASS BALANCE														
OPERATING TIME	hr/day	24	24	24	24	24	24	24	24	24	24	24	24	24
	day/yr	365	365	365	365	365	365	365	365	365	365	365	365	365
TOTAL MASS FLOW	lb/hr	25269	39116	2879	2879	6403	6468	3775	3868	7424	758	12142	7926	5901
SOLIDS	ppm	20400	-	10000	10000	-	10000	1875	19500	10000	10000	36400	1875	-
TOTAL VOLUME FLOW	gpm	49.8	78.1	5.7	5.7	12.8	12.8	7.5	7.6	14.7	1.5	23.7	15.8	11.8
NOTES														

NOTES

1. PRIOR TO EXCAVATION STANDING WATER FROM PITS 5 & 6 WILL BE PUMPED INTO C.W., THEN CONTINUOUSLY PUMPED TO BSL. THE ABOVE OPERATION IS NOT INCLUDED IN THIS WATER BALANCE.
2. WATER IS ABSORBED BY SOIL OR WASTE. NO FREE WATER RETURN.
3. STREAM 10 IS BASED ON STORM WATER, DRAINAGE AREA 'B' & PIT 5
   AVERAGE FLOW RATE BASED ON 20"/YEAR, 13.8 ACRES.
   365 DAYS/YR 24 HRS/DAY (1,001,880 FT.³)
   PEAK FLOW RATE BASED ON 25 YRS. STORM, 24 HRS/DAY (180,000 FT.³)
   (ACTUAL PUMPING RECORDS FOR 1995 INDICATED APPROXIMATELY 10"/YEAR OVER THE 13.8 ACRES.)
4. STREAM 11 IS BASED ON STORM WATER, DRAINAGE AREAS 'C', 'D', 'E', 'J', 'K', AND PITS 4 & 6
   AVERAGE FLOW RATE BASED ON 20"/YEAR, 26 ACRES.
   365 DAYS/YR 24 HRS/DAY (1,887,600 FT.³)
   PEAK FLOW RATE BASED ON 25 YRS. STORM, 24 HRS/DAY (153,380 FT.³)
5. STREAM 6 IS BASED ON STORM WATER, DRAINAGE AREA 'F'
   AVERAGE FLOW RATE BASED ON 20"/YEAR, 4.76 ACRES.
   365 DAYS/YR 24 HRS/DAY (345,576 FT.³)
   PEAK FLOW RATE BASED ON 25 YRS. STORM, 24 HRS/DAY (28,080 FT.³)
6. STREAM 7 IS BASED ON 75% OF DRAINAGE FROM PROCESS AREA. (CONTAMINATED)
   AVERAGE FLOW RATE BASED ON 40"/YEAR, 10.9 ACRES.
   365 DAYS/YR 24 HRS/DAY (1,582,680 FT.³)
   PEAK FLOW RATE BASED ON 25 YRS. STORM, 24 HRS/DAY (127,563 FT.³)
7. STREAM 18 IS BASED ON 25% OF DRAINAGE FROM PROCESS AREA. (CLEAN). THIS REPRESENTS APPROXIMATE ROOF AREA OF REMEDIAL FACILITY.
   AVERAGE FLOW RATE BASED ON 40"/YEAR, 2.75 ACRES.
   365 DAYS/YR 24 HRS/DAY (395,670 FT.³)
   PEAK FLOW RATE BASED ON 25 YRS. STORM, 24 HRS/DAY (37,965 FT.³)
8. TO SUPPLY THE RECYCLE WATER NEEDS (STREAM 9), MAKE-UP WATER FOR THIS TANK WILL COME FIRST FROM THE CISTERN (STREAM 19) WHEN AVAILABLE OR FROM TREATED PROCESS WATER (STREAM 2) WHEN NEEDED. CONDENSATE (STREAM 419) MAY ALSO BE USED AS RECYCLE WATER.

REF DWG NO.	DRAWING TITLE
SK-F-03909	WASTE RETRIEVAL
SK-F-03910	WASTE PREPARATION
SK-F-03913	DRIED WASTE BLENDING AND LOADOUT
SK-F-03956	DRYING AND OFF-GAS TREATMENT SHEET 2 OF 2

MAJOR EQUIPMENT LIST

MARK	QTY	EQUIPMENT NAME
A	1	CONTAMINATED WATER COLLECTION TANK
B	1	RECYCLE WATER COLLECTION TANK
C	1	PUMP, 100 GPM
D	1	PUMP, 200 GPM (EXISTING)
E	4	PUMP, 700 GPM (EXISTING)
F	1	PUMP, 200 GPM
G	1	CISTERN
H	1	PUMP, 250 GPM (EXISTING)

PRELIMINARY
NOT FOR CONSTRUCTION

REV. NO.	ISSUE OR REVISION PURPOSE - DESCRIPTION	A-E INITIALS	FERNCO INITIALS	DATE
C	ISSUED FOR EPA SUBMITTAL PRE-FINAL DESIGN			3/28/96
B	INCORPORATED FERNCO COMMENTS			
A	ISSUED FOR EPA SUBMITTAL PRE-FINAL DESIGN			

UNITED STATES
DEPARTMENT OF ENERGY
FERNALD ENVIRONMENTAL MANAGEMENT PROJECT

THIS DRAWING PREPARED BY
PARSONS
THE RALPH M. PARSONS CO. - PARSONS MAIN, INC. - ENGINEERING-SCIENCE, INC.
CINCINNATI, OHIO

PROJECT NAME
OU1 REMEDIATION DESIGN SYSTEM

DRAWING TITLE
PROCESS
BLOCK FLOW DIAGRAM
OU1 WATER BALANCE

DRAWN BY	DATE	LEAD ENGINEER	DATE	CHECKED BY	DATE
P. A. WILSON	1-19-96			D. JANKE	2-12-96

PLANT/BLDG. NO. | FLOOR | SCALE | QUAD

SUBMITTED FOR APPROVAL | FERNCO OU1 APPROVAL 375 | A-E | DATE

DOE PROJECT NO.	FEMP PROJECT NO.	DRAWING SHEET CODE NO.	SHEET NO.	REV. NO.
	WBS 1.1.1.1.1.3.1 00-90701	SK-F-04084	00000	C

PREPARED UNDER PARSONS PROJECT ORDER NUMBER
WPRAP/PO-145

2038

~~835~~
2038

Equipment ©18

PARSONS
ERA PROJECT

EQUIPMENT LIST
(EPA PRE-FINAL DESIGN REPORT)

CRU-1 PO 145
Date: March 1996

Subject: WASTE RETRIEVAL
Project Title: Remediation System Design (Waste Retrieval)
Discipline: Mechanical/Civil

Rev. F
Checked by: DCO

Mark	Sketch No.	Qty.	Equipment Name	Description	Capacity	HP
A	SK-F-03909	2	Long Reach Excavator	Caterpillar E650 with medium stick or equal (HEPA filtered cab)	5 yd^3	-
B	SK-F-03909	2	Track-Type Loader	Caterpillar 973 track-type loader or equal (HEPA filtered cab)	4.2 yd^3	-
C	SK-F-3909	4	Dump Truck	Caterpillar D25D or equal	13yd^3	-
D	SK-F-03909	1	Drainage Water Collection Truck	W/agitator and discharge pump	1,000 gal	-
F	SK-F-03909	1	Boom Crane	P&H Omega 18 or equal	16 ton	-
G	SK-F-03909	1	Slurry Pump	Submersible steel, 75 ft, TDH	200 gpm	15
H	SK-F-03909	1	Tanker Truck	W/agitator and discharge pump	1,000 gal	-
J	SK-F-03909	1	Future Slurry Surge Tank	Fabricated steel tank	5,000 gal	-
K	SK-F-03909	1	Future Slurry Surge Tank Agitator	Vertical, top mounted		10
L	SK-F-03909	2	Future Slurry Surge Tank Pump	Air Diaphragm	50 gpm	-
M	SK-F-03909	1	Water Truck	W/unloading pump	-	-

TBD = to be determined
* = (by HP) variable frequency drive
G = (by HP) requires standby generator power

376

2038

225

PARSONS
ERA PROJECT

EQUIPMENT LIST
(EPA PRE-FINAL DESIGN REPORT)

GRU-1 PO 145
Date: March 1996

Subject: WASTE RETRIEVAL
Project Title: Remediation System Design (Waste Preparation)
Discipline: Mechanical

Rev. F
Checked by: DCO

Mark	Sketch No.	Qty.	Equipment Name	Description	Capacity	HP
A	SK-F-03910	1	Front-End Loader	Caterpillar 950F wheeled loader or equal (HEPA filtered cab)	4 yd^3	-
B	SK-F-03910	1	Dozer	Caterpillar D3C LGP or equal (HEPA filtered cab)	-	-
C	SK-F-03910	1	12-inch Vibrating Grizzly	Spring-mounted with eccentric drive	-	50
D	SK-F-03910	1	Apron Feeder	W/Drag chain	TBD	10*;2
E	SK-F-03910	1	Grizzly Undersize Conveyor	TBD	TBD	5*
F	SK-F-03910	1	Metal Detector	TBD	TBD	-
G	SK-F-03910	1	Magnetic Belt Conveyor	TBD	TBD	5
H	SK-F-03910	1	Shredder Skip Hoist	Bucket type with automatic dumping	-	25
J	SK-F-03910	1	Process Shredder	Soil shredder, shear type, two stage	90 yd^3/hr	600 600
K	SK-F-03910	2	Shredder Discharge Conveyor	Apron Type	90 yd^3/hr	10
L	SK-F-03910	1	Front-End Loader	Caterpillar 950F wheeled loader or equal (HEPA filtered cab)	4 yd^3	-
M	SK-F-03910	1	Hydraulic Excavator	Caterpillar E650 with long stick or equal (HEPA filtered cab)	5 yd^3	-
N	SK-F-03910	1	Sump Pump	Centrifugal	50 gpm	5
P	SK-F-03910	1	Sump	Concrete	-	-
Q	SK-F-03910	1	Debris Shredder	Shear Type	20 tph	200
R	SK-F-03910	1	Apron Feeder Skip Hoist	TBD	TBD	10
S	SK-F-03910	1	Back Hoe with Grapple	Minimum 25-foot reach (HEPA filtered cab)	TBD	-
T	SK-F-03910	3	Lump Breaker	Roll type w/spikes	-	5*
U	SK-F-03910	1	Front-End Loader	Caterpillar 950F wheeled loader or equal (HEPA filtered cab)	4 yd^3	-

TBD = to be determined
* = (by HP) variable frequency drive
G = (by HP) requires standby generator power

PARSONS
ERA PROJECT

EQUIPMENT LIST
(EPA PRE-FINAL DESIGN REPORT)

CRU-1 PO 145
Date: March 1996

Subject: WASTE RETRIEVAL
Project Title: Remediation System Design (Drying and Off-Gas Treatment)
Discipline: Mechanical

Rev. F
Checked by: DCO

Mark	Sketch No.	Qty.	Equipment Name	Description	Capacity	HP
A	SK-F-03911	1	Dryer Skip Hoist	Bucket type with automatic dumping	3 yd^3	15
B	SK-F-03911	1	Dryer Feeder Hopper	Fabricated steel	TBD	-
C	SK-F-03911	1	Dryer Feeder	Auger type	22 TPH	15*
D	SK-F-03911	1	Indirect Rotary Dryer	22 tph wet feed, 4.2 tph evaporation capacity	TBD	125*;5
D	SK-F-03911	1	Indirect Rotary Dryer Auxiliary Drive			5G
E	SK-F-03911	1	Heat Economizer	Shell & Tube type, 450,000 Btu/hr heat transfer		-
F	SK-F-03911	1	Combustion Gas Exhaust Fan	Centrifugal, air temperature 400°F	35,500 scfm	150*
G	SK-F-03911	1	Combustion Gas Stack	Fabricated steel, air temperature 400°F	35,500 scfm	-
H	SK-F-03911	1	Burner Pipe and Instrumentation Skid	Supplied with indirect rotary dryer	-	-
J	SK-F-03911	1	Combustion Air Supply Fan	Supplied with indirect rotary dryer	-	100*
K	SK-F-03911	2	Cyclone with Electric Heaters	Fabricated steel		4 kW
L	SK-F-03911	1	Air Supply Fan	Centrifugal, air temperature ambient	860 scfm	3*
M	SK-F-03911	1	Dryer Discharge Hopper	Fabricated steel	TBD	-
N	SK-F-03911	1	Dryer Discharge Conveyor	Inclined apron type	22 TPH	10*
P	SK-F-03911	1	Wet Material Feed Conveyor	Auger type	TBD	10*
Q	SK-F-03911	2	Rotary Airlock	Vane type	1,500 lb/hr	1/2
R	SK-F-03911	1	Twin Auger Mixer	Auger type	2.5 TPH	50*
S	SK-F-03911	1	Wet Material Feed Hopper	Fabricated steel	TBD	-
T	SK-F-03911	1	Front End Loader	Caterpillar-936E wheeled loader or equal (HEPA filtered cab)	3 yd^3	-
U	SK-F-03911	1	Dryer Feed Conveyor	Auger type	22 TPH	20*

TBD = to be determined
* = (by HP) variable frequency drive
G = (by HP) requires standby generator power

2038

PARSONS
ERA PROJECT

EQUIPMENT LIST
(EPA PRE-FINAL DESIGN REPORT)

CRU-1 PO 145
Date: March 1996

Subject: WASTE RETRIEVAL
Project Title: Remediation System Design (Drying and Off-Gas Treatment)
Discipline: Mechanical

Rev. F
Checked by: DCO

Mark	Sketch No.	Qty.	Equipment Name	Description	Capacity	HP
A	SK-F-03956	1	Caustic Scrubber with Mist Eliminator	Packed tower and venturi 6000 acfm, max inlet		-
B	SK-F-03956	2	Off-Gas Condenser	Shell and tube, 5 x 10^6 Btu/hr each (heat transfer)		-
C	SK-F-03956	1	Off-Gas Reheater (Electric)	Electric 30,000 Btu/hr		10 kW
D	SK-F-03956	2	MEPA Filter	one standby	850 scfm	-
E	SK-F-03956	2-set	Future Carbon Bed		850 scfm	-
F	SK-F-03956	2	HEPA with Prefilters	One standby	850 scfm	-
G	SK-F-03956	2	Off-Gas Exhaust Fan Skids	Centrifugal, one standby (two in series, 15 HP ea, 30HP/skid)	850 scfm	30*
H	SK-F-03956	1	Off-Gas Stack	Fabricated steel	850 scfm	-
J	SK-F-03956	1	Wastewater Transfer Tank	Fabricated steel	1000 gal	-
K	SK-F-03956	2	Wastewater Transfer Tank Pump	Centrifugal, horizontal, one standby	40 gpm	2
L	SK-F-03956	2	Caustic Supply Pump	Positive displacement metering, one standby	1 gpm	1/3
M	SK-F-03956	1	Caustic Day Tank	Fabricated stainless steel, includes immersion heater	200 gal	6 kW
N	SK-F-03956	2	Caustic Scrubber Pump	One standby centrifugal, horizontal	75 gpm	1 1\2
P	SK-F-03956	1	Condensate Transfer Tank	Fab steel	500 gal	-
Q	SK-F-03956	2	Condensate Transfer Pump	Cent; horz.	20 gpm	3/4
R	-	1	Caustic Storage Tank	To be determined during detailed design	TBD	TBD
S	-	2	Caustic Storage Tank Pump	To be determined during detailed design	TBD	TBD
-	-	1	Condensate Collection Tank	To be determined during detailed design	TBD	TBD
-	-	1	Contaminated Liquid Collection Tank	To be determined during detailed design	TBD	TBD

TBD = to be determined
* = (by HP) variable frequency drive
G = (by HP) requires standby generator power

PARSONS
ERA PROJECT

EQUIPMENT LIST
(EPA PRE-FINAL DESIGN REPORT)

CRU-1 PO 145
Date: March 1996

Subject: WASTE RETRIEVAL
Project Title: Remediation System Design (Dried Waste Blending and Loadout)
Discipline: Mechanical

Rev. F
Checked by: DCO

Mark	Sketch No.	Qty.	Equipment Name	Description	Capacity	HP
A	SK-F-03913	2	Front-End Loader	Caterpillar 936E Wheeled Loader or equal (HEPA filtered cab)	3 yd^3	-
B	SK-F-03913	1	Front-End Loader	Caterpillar 966F Wheeled Loader or equal (HEPA filtered cab)	5 yd^3	-
C	SK-F-03913	1	Bridge Crane	Cable type, plumb lift w/two one-ton hoists	2 tons	2; 2; 1½; 1½
D	SK-F-03913	1 set	Track Scale	Platform type, electronic (to be included with the On-Site Rail Improvement Package)	125 tons	-
E	SK-F-03913	1	Car Mover	TBD	TBD	-
F	SK-F-03913	1	Water truck	TBD	TBD	-

TBD = to be determined
* = (by HP) variable frequency drive
G = (by HP) requires standby generator power

380

2038

PARSONS
ERA PROJECT

EQUIPMENT LIST
(EPA PRE-FINAL DESIGN REPORT)

RU-1 PO 145
Date: March 1996

Subject: DRYER FEED AND DISCHARGE BUILDINGS
Project Title: Remediation System Design
Discipline: Mechanical Utilities

Rev. F
Checked by: DCO

Mark	Sketch No.	Qty.	Equipment Name	Description	Capacity	HP
			DRYER DISCHARGE BUILDING			
	Not shown on PFD	1	Exhaust Fan	Centrifugal BI SWSI	10,900 scfm	20
	Not shown on PFD	1	Filter Unit	85 percent prefilter, HEPA filter, four wide by 3 high	10,900 scfm	-
	Not shown on PFD	1	Supply Fan	Centrifugal BI SWSI	10,900 scfm	15
	Not shown on PFD	4	Electric Unit Heater	Horizontal mounting	25.6 mbh	7.5 kW
	Not shown on PFD	1	Discharge Stack	Fabricated steel	10,900 scfm	-
			DRYER FEED BUILDING			
	Not shown on PFD	1	Exhaust Fan	Propeller wall fan	10,000 scfm	2
	Not shown on PFD	2	Electric Unit Heater	Horizontal mounting	25.6 mbh	7.5 kW
			MECHANICAL UTILITIES BUILDING			
	Not shown on PFD	2	Chiller	Open drive, centrifugal	375 tons ea	323 kW
	Not shown on PFD	1	Cooling Tower	Two cell (located on off-gas pad), 378 tons ea cell	756 tons	25;25
	Not shown on PFD	1	Compressed Air System	Package unit with aftercooler, dryer and receiver	30 cfm 100 psi	15
	Not shown on PFD	3	Chilled Water Pump	Cent., horizontal, split case (chiller)	1000 gpm	30
	Not shown on PFD	3	Cooling Tower Water Pump	Cent., horizontal, split case (cooling tower)	1,125 gpm	25
	Not shown on PFD	10	Electric Unit Heater	Horizontal mounting	25.6 mbh	7.5 kW
	Not shown on PFD	6	Exhaust Fan	Propeller wall fan	10,000 scfm	2
	Not shown on PFD	1	Air Conditioner	Packaged electric heating and cooling	6 tons	10 HP 18 kW

TBD = to be determined
* = (by HP) variable frequency drive
G = (by HP) requires standby generator power

PARSONS
ERA PROJECT

EQUIPMENT LIST
(EPA PRE-FINAL DESIGN REPORT)

CRU-1 PO 145
Date: March 1996

Subject: WASTE RETRIEVAL
Project Title: Remediation System Design
Discipline: Electrical

Rev. F
Checked by:

Mark	Sketch No.	Qty.	Equipment Name	Description	Capacity	HP
	N/A	1	Substation, 13.2 kV/480 V	13.2 kV - 480 V, 1500/2000 kVA, 2400 A, 480 V, secondary*		
	N/A	4	Motor Control Centers	480 V, 800 A bus		
	N/A	9	Lighting and Power Transformers	480-208/120 V, dry type, 3 phase, 50 kVA		
	N/A	9	Lighting and Power Panels	208/120 V, 42 CKT, 3 phase, w/150 amp main bkr		
	N/A	1	Diesel Generator	Stand-by, 500 KW, P.F. = .8, 480 V, 3 phase		
	N/A	1	UPS	Uninterruptible power supply, 25 kVA, 480 V, 3 phase		
	N/A	1	Substation, 13.2 kV/480 V	13.2 kV-480 V 2000/2667 kVA, 3200 A, 480 V secondary		
	N/A	1	Automatic Transfer Switch, 600 V	480 V, 800 A		
				*For Process Shredder		

* = (by HP) variable frequency drive
G = (by HP) requires standby generator power

382

2038

PARSONS
ERA PROJECT

EQUIPMENT LIST (FUTURE EXPANSION)
(EPA PRE-FINAL DESIGN REPORT)

CRU-1 PO 145
Date: March 1996

Subject: WASTE RETRIEVAL
Project Title: Remediation System Design (Drying and Off-Gas Treatment)
Discipline: Mechanical

Rev. F
Checked by: DCO

Mark	Sketch No.	Qty.	Equipment Name	Description	Capacity	HP
		1	Dryer Skip Hoist	Bucket type with automatic dumping	3 yd^3	15
		1	Dryer Feeder Hopper	Fabricated steel	TBD	-
		1	Dryer Feeder	Auger type	22 TPH	15*
		1	Indirect Rotary Dryer	22 tph wet feed, 4.2 tph evaporation capacity	TBD	125; *5
		1	Heat Economizer	Shell & Tube type, 450,000 Btu/hr heat transfer		-
		1	Combustion Gas Exhaust Fan	Centrifugal	35,500 SCFM	150*
		1	Combustion Gas Stack	Fabricated steel	35,500 SCFM	-
		1	Burner Pipe and Instrumentation Skid	Supplied with indirect rotary dryer	-	-
		1	Combustion Air Supply Fan	Supplied with indirect rotary dryer	-	100
		2	Cyclone with Electric Heaters	Fabricated steel		4 kW
		1	Air Supply Fan	Centrifugal	860 SCFM	3*
		1	Dryer Discharge Hopper	Fabricated steel	TBD	-
		1	Dryer Discharge Conveyor	Inclined apron type	22 TPH	10*
		2	Rotary Airlock	Vane type	1,500 lb/hr	1/2
		1	Dryer Feed Conveyor	Auger type	22 TPH	20*

TBD = to be determined
* = (by HP) variable frequency drive

383

2038

PARSONS
ERA PROJECT

EQUIPMENT LIST (FUTURE EXPANSION)
(EPA PRE-FINAL DESIGN REPORT)

CRU-1 PO 145
Date: March 1996

Subject: WASTE RETRIEVAL
Project Title: Remediation System Design (Drying and Off-Gas Treatment)
Discipline: Mechanical

Rev. F
Checked by: DCO

Mark	Sketch No.	Qty.	Equipment Name	Description	Capacity	HP
		1	Caustic Scrubber with Mist Eliminator	Packed tower and venturi 6000 acfm, max inlet		-
		2	Off-Gas Condenser	Shell and tube, 5 x 10^6 Btu/hr (heat transfer)		-
		1	Off-Gas Reheater (Electric)	Electric 30,000 Btu/hr		10 kW
		2	MEPA Filter	one standby	850 SCFM	-
		2-set	Future Carbon Bed		850 SCFM	-
		2	HEPA with Prefilters	TBD, one standby	850 SCFM	-
		2	Off-Gas Exhaust Fan	Centrifugal, one standby	850 SCFM	20
		1	Off-Gas Stack	Fabricated steel	850 SCFM	-
		1	Wastewater Transfer Tank	Fabricated steel	1000 gal	-
		2	Wastewater Transfer Tank Pump	Centrifugal, horizontal, one standby	40 gpm	2
		2	Caustic Supply Pump	Positive displacement metering, one standby	1 gpm	1/3
		2	Caustic Scrubber Pump	One standby centrifugal, horizontal	75 gpm	1 1\2
		1	Condensate Transfer Tank	Fab steel	500 gal	-
		2	Condensate Transfer Pump	Cent; horz.	20 gpm	3/4
		1	Caustic Day Tank	Fabricated Stainless Steel; includes immersion heater	200 gal	6 kw

TBD = to be determined
* (by HP) = variable frequency drive

PARSONS
ERA PROJECT

EQUIPMENT LIST (FUTURE EXPANSION)
(EPA PRE-FINAL DESIGN REPORT)

CRU-1 PO 145
Date: March 1996

Subject: DRYER FEED AND DISCHARGE BUILDINGS
Project Title: Remediation System Design
Discipline: Mechanical Utilities

Rev. F
Checked by: DCO

Mark	Sketch No.	Qty.	Equipment Name	Description	Capacity	HP
DRYER DISCHARGE BUILDING						
	Not shown on PFD	1	Exhaust Fan	Centrifugal BI SWSI	10,900 scfm	20
	Not shown on PFD	1	Filter Unit	85 percent prefilter, HEPA filter, four wide by 3 high	10,900 scfm	-
	Not shown on PFD	1	Supply Fan	Centrifugal BI SWSI	10,900 scfm	15
	Not shown on PFD	4	Electric Unit Heater	Horizontal mounting	25.6 mbh	7.5 kW
	Not shown on PFD	1	Discharge Stack	Fabricated steel	10,900 scfm	-
DRYER FEED BUILDING						
	Not shown on PFD	1	Exhaust Fan	Propeller wall fan	10,000 scfm	2
	Not shown on PFD	2	Electric Unit Heater	Horizontal mounting	25.6 mbh	7.5 kW
MECHANICAL UTILITIES BUILDING						
	Not shown on PFD	2	Chiller	Open drive, centrifugal	375 tons ea	323 kW
	Not shown on PFD	1	Cooling Tower	Two cell (located on off-gas pad), 378 tons ea cell	756 tons	25;25
	Not shown on PFD	1	Compressed Air System	Package unit with aftercooler, dryer and receiver	30 cfm 100 psi	15
	Not shown on PFD	3	Chilled Water Pump	Cent., horizontal, split case (chiller)	1000 gpm	30
	Not shown on PFD	3	Cooling Tower Water Pump	Cent., horizontal, split case (cooling tower)	1,125 gpm	25
	Not shown on PFD	10	Electric Unit Heater	Horizontal mounting	25.6 mbh	7.5 kW
	Not shown on PFD	6	Exhaust Fan	Propeller wall fan	10,000 scfm	2
	Not shown on PFD	1	Air Conditioner	Packaged electric heating and cooling	6 tons	10 HP 18 kW

TBD = to be determined
[illegible] = (by HP) variable frequency drive

385

2038

~~235~~

2038

General Arrangement Drawings

General Arrangement Drawings

Drawing No.	Title	Revision	Date
SK-G-04164	Civil Preliminary Site Plan	B	3/20/96
SK-G-04165	Civil Preliminary Utility Plan	B	3/20/96
SK-M-03916	Materials Handling General Arrangement Plan Pit Waste Remediation Facility	E	3/20/96
SK-M-03917	Materials Handling Plan Waste Preparation Area	E	3/20/96
SK-M-03918	Material Handling Sections Waste Preparation Area	E	3/20/96
SK-M-03919	Material Handling Plan Drying Facility	E	3/20/96
SK-M-03920	Material Handling Sections- Drying Facility	E	3/20/96
SK-M-03921	Material Handling Plan Blending & Rail Loadout Facility	E	3/20/96
SK-M-03922	Material Handling Sections Blending & Rail Loadout Facility	E	3/20/96

P:\oudata\ou1\po145\review

skg04164.m po145@ws412. Fri Mar 15 14:08:41 CST 1996

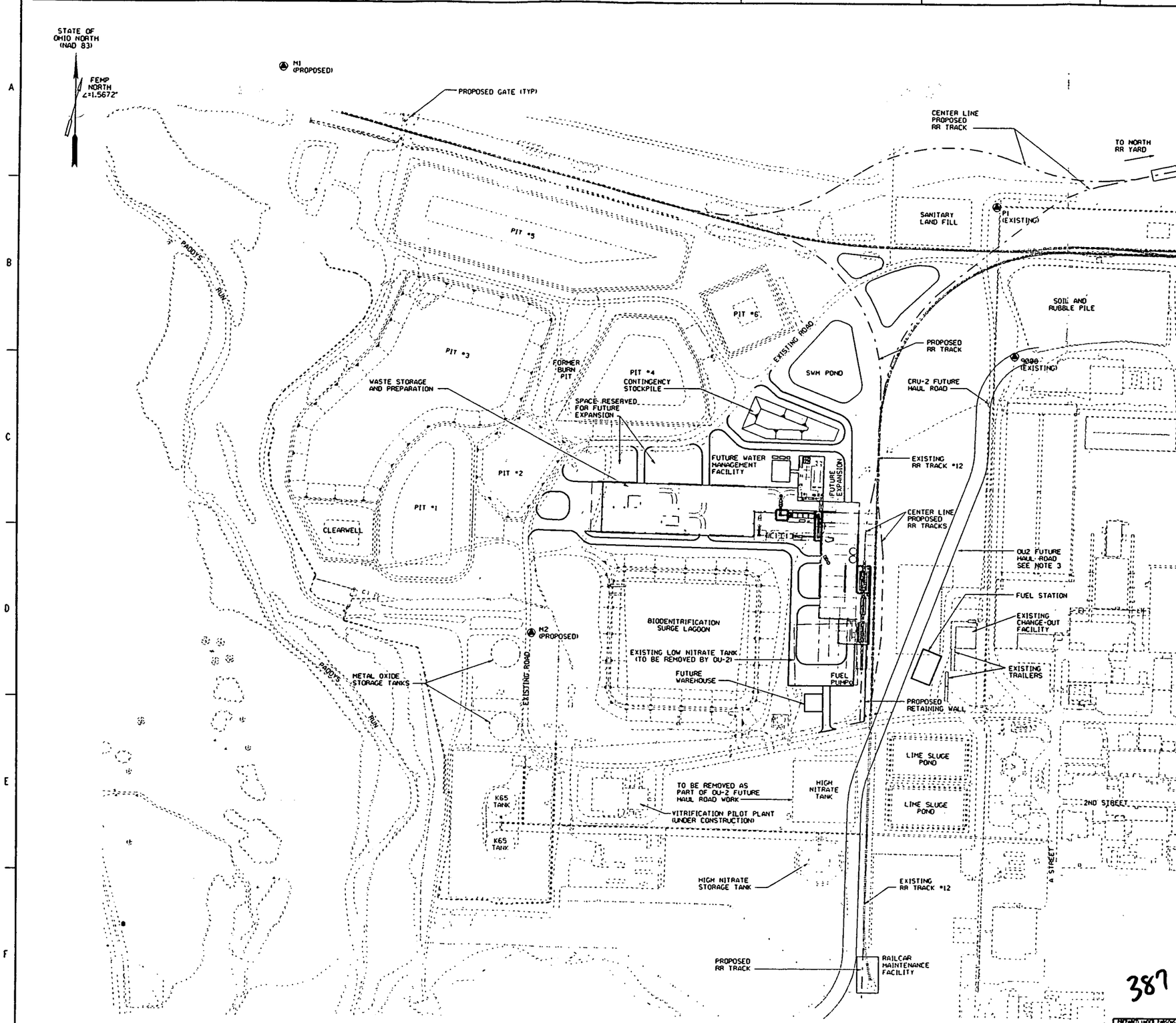

387

NOTES

1. EXISTING CONDITIONS SHOWN ON THIS DRAWING WERE PREPARED FROM THE DOCUMENTS LISTED BELOW:
   EXISTING SITE DATA SOURCE (IN PLANT FILES)
   FEMP 1992 FLYOVER SURVEY
   FEMP CONTRACTOR PROJECT DESIGN DOCUMENTS
2. THIS DRAWING SUPERSEDES DRAWING NO. SK-G-03936 REV. B.
3. COORDINATION OF OU2 HAUL ROAD CONSTRUCTION AND PROPOSED RAILROAD SPUR IS REQUIRED.

~~985~~

2038

LEGEND

EXISTING		PROPOSED
	ROAD/PAVEMENT	
	RAILROAD	
	STRUCTURE	
	FENCE	
	SURVEY MONUMENT	

REF DWG NO.	DRAWING TITLE
SK-G-04165	PRELIMINARY UTILITY PLAN

PRELIMINARY
NOT FOR CONSTRUCTION

REV. NO.	ISSUE OR REVISION PURPOSE - DESCRIPTION	A-E	FEMCO	DATE
B	ISSUED FOR EPA SUBMITTAL PRE-FINAL DESIGN			3/28/96
A	ISSUED FOR CLIENT REVIEW PREFINAL DESIGN FOR EPA		NA	2/14/96

INITIALS AND DATE

UNITED STATES
DEPARTMENT OF ENERGY
FERNALD ENVIRONMENTAL MANAGEMENT PROJECT

THIS DRAWING PREPARED BY
PARSONS
THE RALPH M. PARSONS CO. - PARSONS MAIN, INC. - ENGINEERING-SCIENCE, INC.
CINCINNATI, OHIO

PROJECT NAME
OU1 REMEDIATION SYSTEM DESIGN

DRAWING TITLE
CIVIL
PRELIMINARY SITE PLAN

DRAWN BY	DATE	LEAD ENGINEER	DATE	CHECKED BY	DATE
T. AFSHAR	01/30/96			ED HUBRIN	2/14/96

PLANT/BLDG NO. | FLOOR | SCALE 1"=100' | CLASS

SUBMITTED FOR APPROVAL | FEMCO CRU APPROVAL NA

A-E PROJECT NO.	DATE	FEMP PROJECT NO.	DATE	DRAWING SHEET CODE NO.	SHEET NO.	REV. NO.
		WBS 1.1.1.1.1.3.1 00-90701		SK-G-04164	G0001	B

PREPARED UNDER PARSONS PROJECT ORDER NUMBER
WPRAP/P0145

skg04165.m po145@ws412. Fri Mar 15 14:29:57 CST 1996

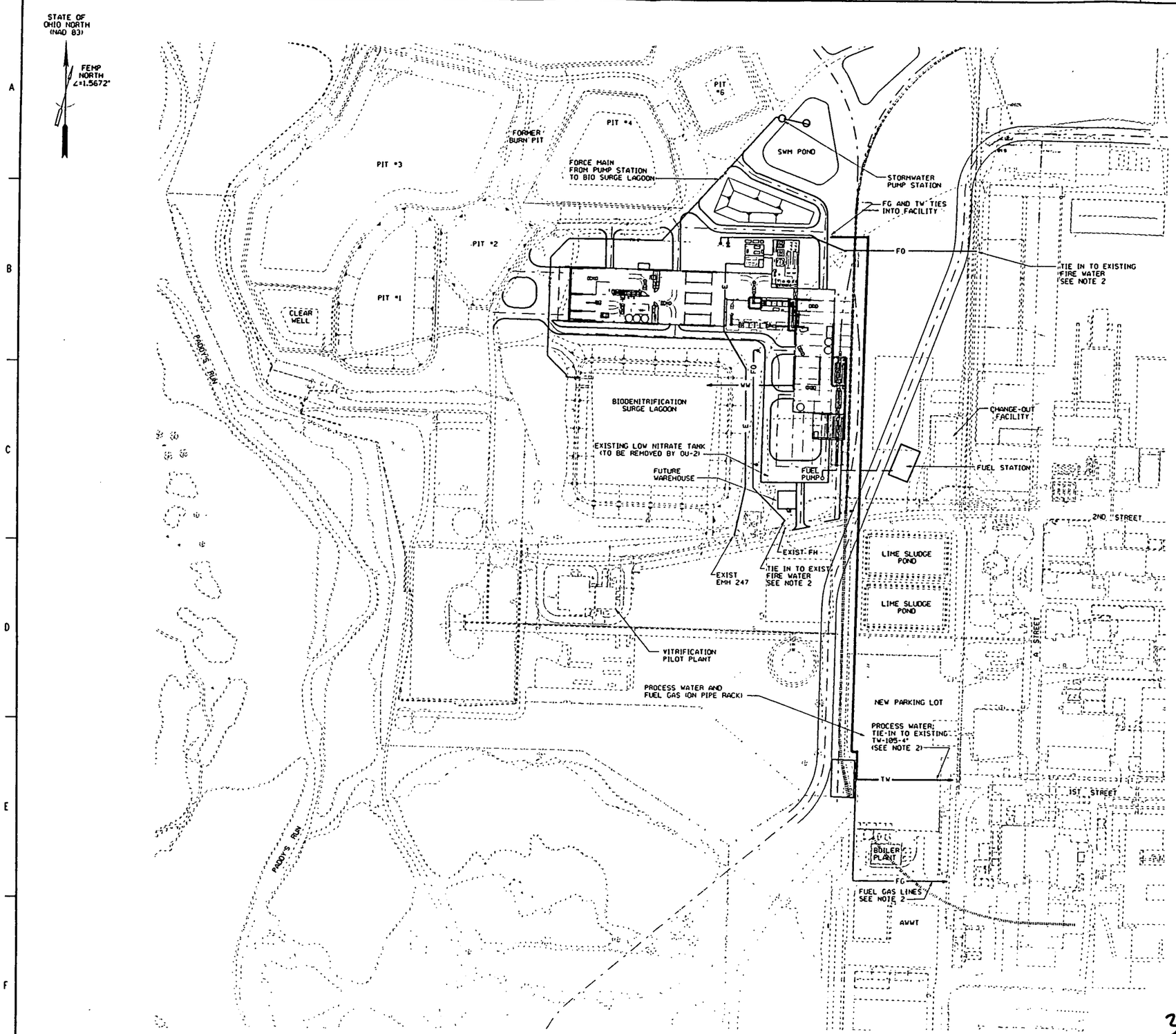

388

NOTES

1. EXISTING CONDITIONS SHOWN ON THIS DRAWING WERE PREPARED FROM FEMP SITE PROVIDED DATA FROM THE DOCUMENTS LISTED BELOW.

   EXISTING SITE DATA SOURCE (IN PLANT FILES)
   FEMP 1992 FLYOVER SURVEY
   FEMP CONTRACTOR PROJECT DESIGN DOCUMENTS

2. INTERFACE POINTS WITH EXISTING UTILITY LINES MAY CHANGE DURING TITLE DESIGN.
3. THIS DRAWING SUPERSEDES DRAWING NO. SK-G-03666 REV. B.

~~235~~
2038

LEGEND

EXISTING		PROPOSED
	ROAD/PAVEMENT	
	RAILROAD	
	STRUCTURE	
	FENCE	
	FIREWATER LINE	—FO—
	PROCESS WATER	—TW—
	WASTEWATER	—WW—
	ELECTRICAL	—E—

REF DWG NO.	DRAWING TITLE
SK-G-04164	PRELIMINARY SITE PLAN

PRELIMINARY
NOT FOR CONSTRUCTION

REV. NO.	ISSUE OR REVISION PURPOSE - DESCRIPTION	A-E	FEMP	DATE
B	ISSUED FOR EPA SUBMITTAL PRE-FINAL DESIGN		NA	3/28/96
A	ISSUED FOR CLIENT REVIEW PREFINAL DESIGN FOR EPA		NA	2/14/96

INITIALS AND DATE

UNITED STATES DEPARTMENT OF ENERGY
FERNALD ENVIRONMENTAL MANAGEMENT PROJECT

THIS DRAWING PREPARED BY
PARSONS
THE RALPH M. PARSONS CO. - PARSONS MAIN, INC. - ENGINEERING-SCIENCE, INC.
CINCINNATI, OHIO

PROJECT NAME
OU1 REMEDIATION SYSTEM DESIGN

DRAWING TITLE
CIVIL
PRELIMINARY UTILITY PLAN

DRAWN BY	DATE	LEAD ENGINEER	DATE	CHECKED BY	DATE
Y. AFSHAR	01/30/96			ED KUBRIN	2-6-96

PLANT/BLDG NO	FLOOR	SCALE	CLASS
		1"=100'	

SUBMITTED FOR APPROVAL	FEMPCO CRU APPROVAL
A-E DATE	NA DATE

PREPARED UNDER PARSONS PROJECT ORDER NUMBER	A-E PROJECT NO.	FEMP PROJECT NO.	DRAWING INDEX CODE NO.	SHEET NO.	REV. NO
WPRAP/P0145		WBS 1.1.1.1.1.3.1 00-90701	SK-G-04165	G0002	B

[redacted]

skm03916.m po145@ws319. Fri Mar 15 12:49:18 CST 1996

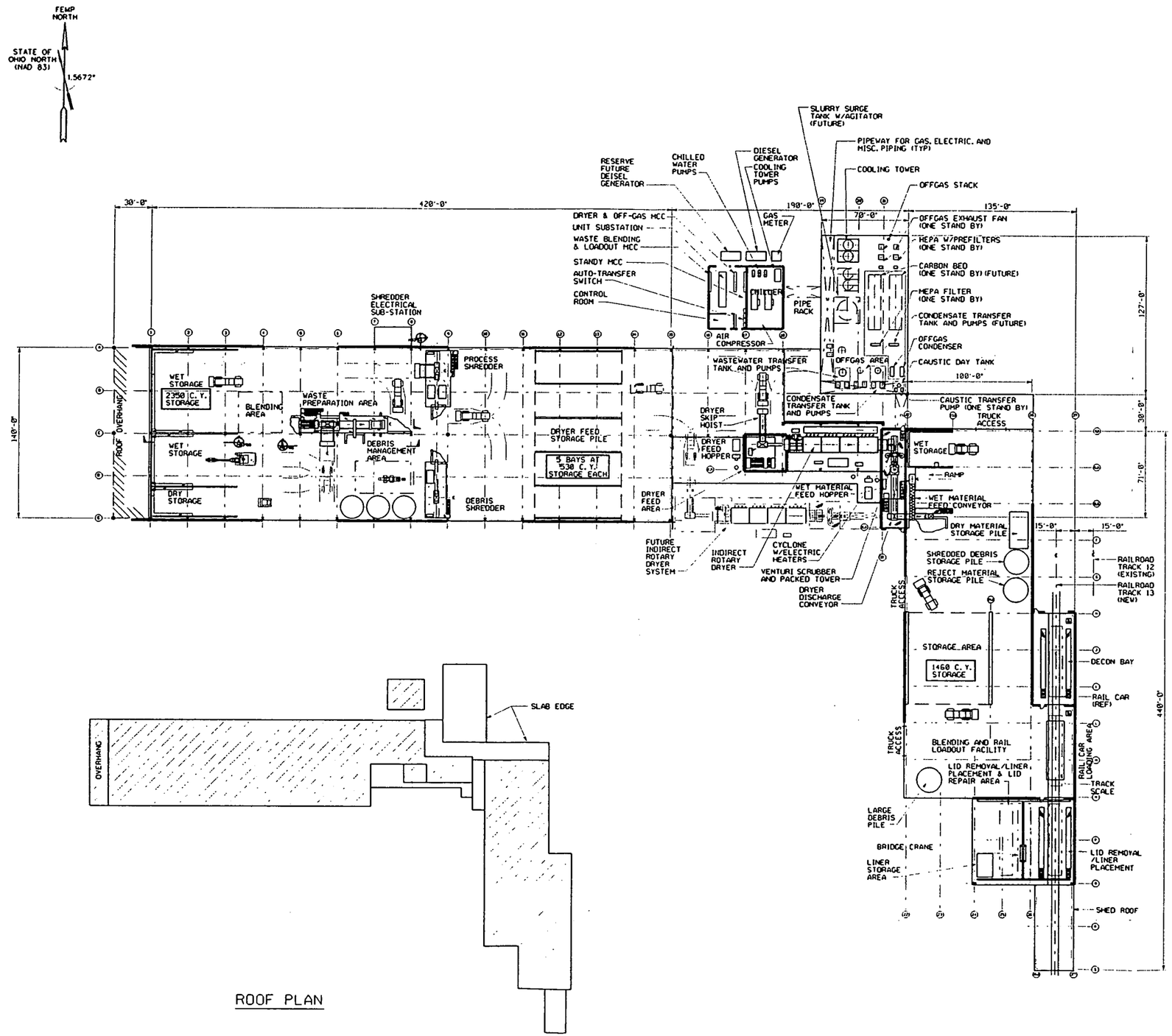

NOTES

1. MOBILE EQUIPMENT WILL BE SUPPLIED WITH ENGINEERED CONTROLS TO MAINTAIN WORKER EXPOSURE ALARA.

~~225~~

2038

LEGEND

- PARTIAL WALL
- FULL HEIGHT WALL
- CONCRETE PAD
- ROOF OVERHANG

REF DWG NO.	DRAWING TITLE
SK-M-03917	PLAN - WASTE PREPARATION AREA
SK-M-03919	PLAN - DRYING AREA
SK-M-03921	PLAN - BLENDING/RAIL LOADOUT AREA
SK-G-03942	CIVIL SITE - PLAN

PRELIMINARY
NOT FOR CONSTRUCTION

REV. NO.	ISSUE OR REVISION PURPOSE - DESCRIPTION	A-E	FERMCO	DATE
E	ISSUED FOR EPA SUBMITTAL PREFINAL DESIGN			3/28/96
D	ISSUED FOR EPA SUBMITTAL PREFINAL DESIGN			2/19/96
C	ISSUED FOR CONCEPTUAL DESIGN (CLIENT COMMENTS INCORPORATED)			
B	ISSUED FOR CONCEPTUAL DESIGN (CLIENT COMMENTS INCORPORATED)			10/23/95
A	ISSUED FOR CONCEPTUAL DESIGN			

INITIALS AND DATE

UNITED STATES
DEPARTMENT OF ENERGY
FERNALD ENVIRONMENTAL MANAGEMENT PROJECT

THIS DRAWING PREPARED BY
PARSONS
THE RALPH M. PARSONS CO. - PARSONS MAIN, INC. - ENGINEERING-SCIENCE, INC.
CINCINNATI, OHIO

PROJECT NAME
OU1 REMEDIATION SYSTEM DESIGN

DRAWING TITLE
MATERIALS HANDLING
GENERAL ARRANGEMENT PLAN
PIT WASTE REMEDIATION FACILITY

DRAWN BY	DATE	LEAD ENGINEER	DATE	CHECKED BY	DATE
NH TERRY	10-3-95			K. TULI	10-3-95

PLANT/BLDG NO.	FLOOR	SCALE	CLASS
		1/32" = 1'-0"	

SUBMITTED FOR APPROVAL — A-E — DATE
FERMCO CRU APPROVAL — N/A — DATE

PREPARED UNDER PARSONS PROJECT ORDER NUMBER	LOE PROJECT NO.	TEMP PROJECT NO.	DRAWING REF CODE NO.	SHEET NO.	REV. NO.
WPRAP/PO145		WBS 1.1.1.1.1.3.1 00-90701	SK-M-03916	M0011	E

389

[redacted]

skm03917.m po145@ws319. Fri Mar 15 13:06:28 CST 1996

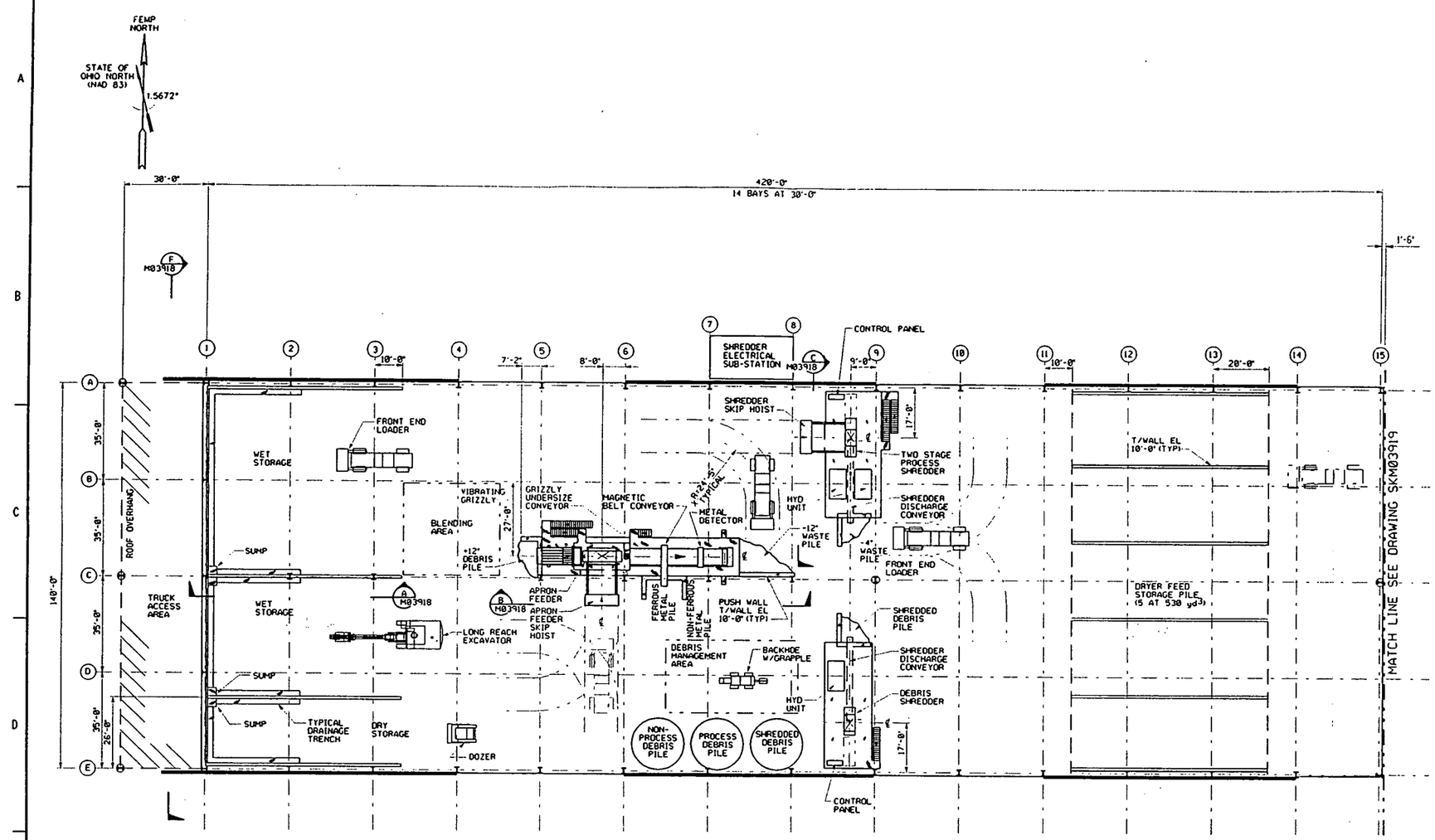

PLAN VIEW
HP FIN FL
EL 0'-0"
UNLESS NOTED

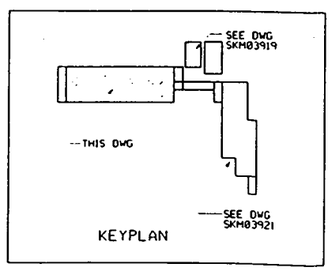

NOTES

1. DURING HANDLING OF SEMI-DRY AND DRY WASTE, MOBILE WATER SPRAY EQUIPMENT WILL BE USED TO CONTROL FUGITIVE PARTICULATE EMISSIONS IN THE AREA.
2. MOBILE EQUIPMENT WILL BE SUPPLIED WITH ENGINEERED CONTROLS TO MAINTAIN WORKER EXPOSURE ALARA.

2038

LEGEND

- PARTIAL WALL
- FULL HEIGHT WALL
- CONCRETE PAD
- ROOF OVERHANG

REF DWG NO.	DRAWING TITLE
SK-M-03918	MATERIAL HANDLING SECTIONS WASTE PREPARATION AREA
SK-M-03919	MATERIAL HANDLING PLAN DRYING FACILITY

PRELIMINARY
NOT FOR CONSTRUCTION

REV. NO.	ISSUE OR REVISION PURPOSE - DESCRIPTION	A-E	FENCO	DATE
E	ISSUED FOR EPA SUBMITTAL PREFINAL DESIGN			3/20/96
D	ISSUED FOR EPA SUBMITTAL PREFINAL DESIGN			2/19/96
C	ISSUED FOR CONCEPTUAL DESIGN (CLIENT COMMENTS INCORPORATED)			
B	ISSUED FOR CONCEPTUAL DESIGN (CLIENT COMMENTS INCORPORATED)			10/23/95
A	ISSUED FOR CONCEPTUAL DESIGN			

INITIALS AND DATE

UNITED STATES
DEPARTMENT OF ENERGY
FERNALD ENVIRONMENTAL MANAGEMENT PROJECT

THIS DRAWING PREPARED BY
PARSONS
THE RALPH M. PARSONS CO. - PARSONS MAIN, INC. - ENGINEERING-SCIENCE, INC.
CINCINNATI, OHIO

PROJECT NAME
OU1 REMEDIATION SYSTEM DESIGN
CRU1 / PO145

DRAWING TITLE
MATERIALS HANDLING
PLAN
WASTE PREPARATION AREA

DRAWN BY	DATE	LEAD ENGINEER	DATE	CHECKED BY	DATE
NH TERRY	09-13-95			K TULI	10-04-95

PLANT/BLDG. NO.	FLOOR	SCALE	CLASS
		1/8" = 1'-0"	

SUBMITTED FOR APPROVAL	FERNCO CRU APPROVAL
A-E DATE	N/A DATE

390

PREPARED UNDER PARSONS PROJECT ORDER NUMBER	DOE PROJECT NO.	FEMP PROJECT NO.	DRAWING INDEX CODE NO.	SHEET NO.	REV. NO.
WPRAP/PO145		WBS 1.1.1.1.1.3.1 00-90701	SK-M-03917	M0012	E

skm03918.m po145@ws319. Fri Mar 15 13:20:16 CST 1996

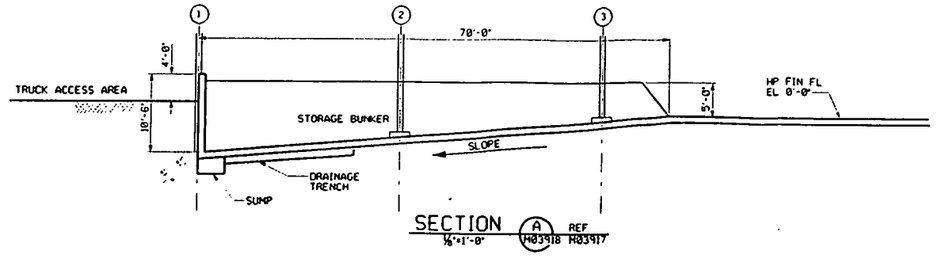

SECTION (A) REF M03918 M03917
1/8" = 1'-0"

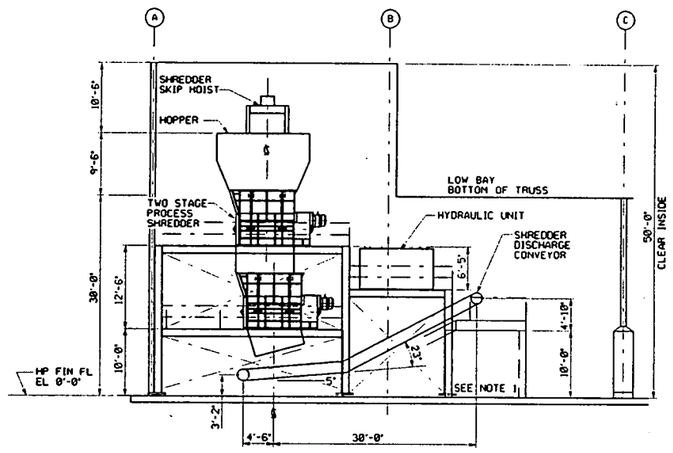

SECTION (C) REF M03918 M03917
1/8" = 1'-0"

(SKIP HOIST BASE NOT SHOWN FOR CLARITY)

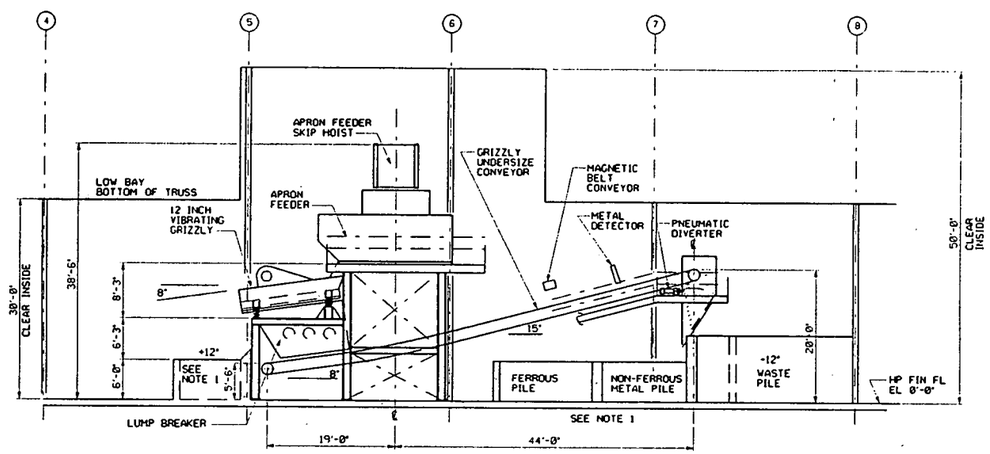

SECTION (B) REF M03918 M03917
1/8" = 1'-0"

(APRON FEEDER SKIP HOIST BASE NOT SHOWN FOR CLARITY)

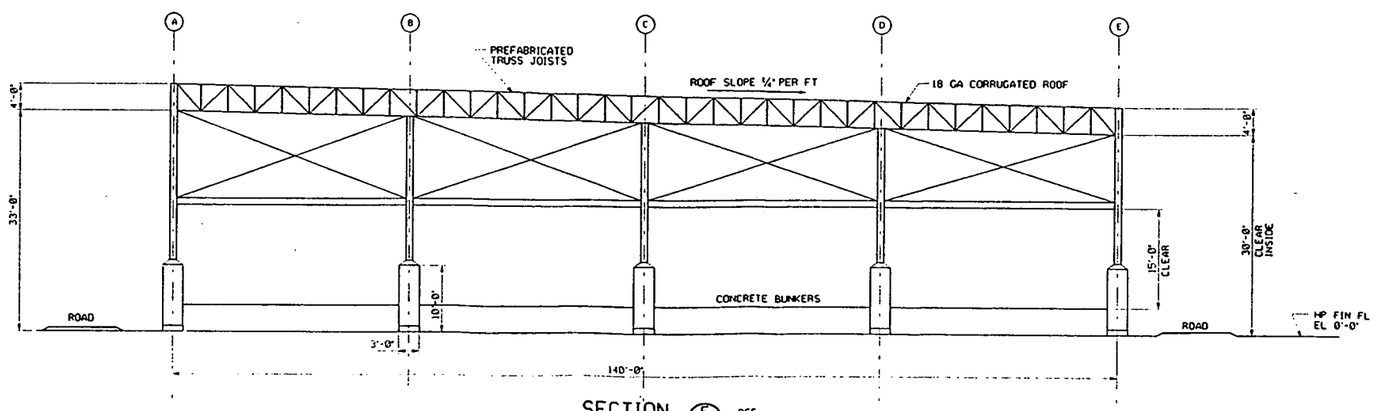

SECTION (F) REF M03918 M03917
1/8" = 1'-0"

NOTES

1. WASTE MATERIALS IN THESE AREAS WILL BE RETRIEVED BY MOBILE EQUIPMENT.

~~235~~
2038

REF DWG NO.	DRAWING TITLE
SK-M-03917	PLAN - WASTE PREPARATION AREA

PRELIMINARY
NOT FOR CONSTRUCTION

REV. NO.	ISSUE OR REVISION PURPOSE - DESCRIPTION	A-E	FERNCO	DATE
E	ISSUED FOR EPA SUBMITTAL PREFINAL DESIGN			3/28/96
D	ISSUED FOR EPA SUBMITTAL PREFINAL DESIGN			2/19/96
C	ISSUED FOR CONCEPTUAL DESIGN (CLIENT COMMENTS INCORPORATED)			
B	ISSUED FOR CONCEPTUAL DESIGN (CLIENT COMMENTS INCORPORATED)			10/23/95
A	ISSUED FOR CONCEPTUAL DESIGN			

INITIALS AND DATE

UNITED STATES
DEPARTMENT OF ENERGY
FERNALD ENVIRONMENTAL MANAGEMENT PROJECT

THIS DRAWING PREPARED BY
PARSONS
THE RALPH M. PARSONS CO. - PARSONS MAIN, INC. - ENGINEERING-SCIENCE, INC.
CINCINNATI, OHIO

PROJECT NAME
OU1 REMEDIATION SYSTEM DESIGN

DRAWING TITLE
MATERIAL HANDLING
SECTIONS
WASTE PREPARATION AREA

DRAWN BY	DATE	LEAD ENGINEER	DATE	CHECKED BY	DATE
N.TERRY	09-13-95			J.ROBINSON	9/28/95

PLANT/BLDG. NO.	FLOOR	SCALE	CLASS
		AS NOTED	

SUBMITTED FOR APPROVAL A-E	DATE	FERNCO ORU APPROVAL	DATE
		N/A	

391

PREPARED UNDER PARSONS PROJECT ORDER NUMBER	DOE PROJECT NO.	TEMP PROJECT NO.	DRAWING TREE'S CODE NO.	SHEET NO.	REV. NO.
WPRAP/P0145		WBS 1.1.1.1.1.3.1 00-90701	SK-M-03918	M0013	E

skm03919.m po145@ws319. Fri Mar 15 13:35:38 CST 1996

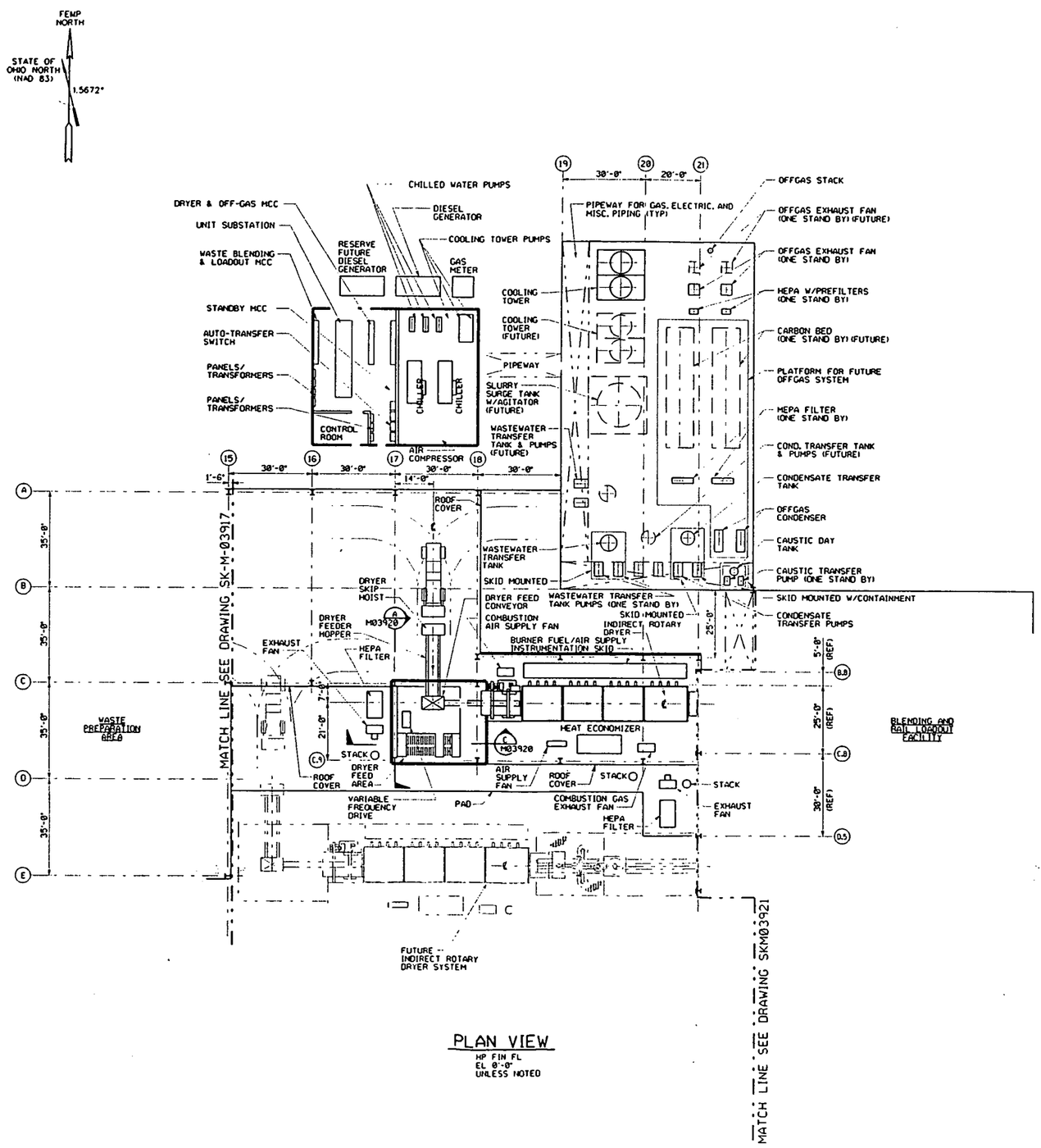

PLAN VIEW
HP FIN FL
EL 0'-0"
UNLESS NOTED

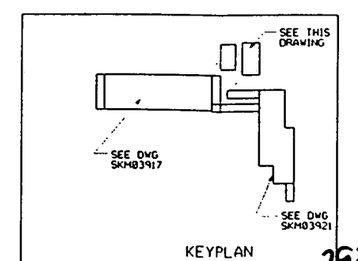

KEYPLAN

NOTES

1. EXCAVATION EQUIPMENT OPERATING AREA WILL ALSO BE USE FOR ACCESS ACROSS THE FACILITY IN THE NORTH-SOUTH DIRECTION.
2. MOBILE EQUIPMENT WILL BE SUPPLIED WITH ENGINEERED CONTROLS TO MAINTAIN WORKER EXPOSURE ALARA.

~~285~~
2038

LEGEND

- PARTIAL WALL
- FULL HEIGHT WALL
- CONCRETE PAD
- ROOF OVERHANG

REF DWG NO.	DRAWING TITLE
SK-M-03917	PLAN - WASTE PREPARATION AREA
SK-M-03920	SECTIONS - DRYING FACILITY
SK-M-03921	PLAN - BLENDING AND RAIL LOADOUT FACILITY

PRELIMINARY
NOT FOR CONSTRUCTION

REV. NO.	ISSUE OR REVISION PURPOSE - DESCRIPTION	A-E	FERNCO	DATE
E	ISSUED FOR EPA SUBMITTAL PREFINAL DESIGN PACKAGE			3/28/95
D	ISSUED FOR EPA SUBMITTAL PREFINAL DESIGN PACKAGE			2/19/95
C	ISSUED FOR CONCEPTUAL DESIGN (CLIENT COMMENTS INCORPORATED)			
B	ISSUED FOR CONCEPTUAL DESIGN (CLIENT COMMENTS INCORPORATED)			10/23/94
A	ISSUED FOR CONCEPTUAL DESIGN			

INITIALS AND DATE

UNITED STATES
DEPARTMENT OF ENERGY
FERNALD ENVIRONMENTAL MANAGEMENT PROJECT

THIS DRAWING PREPARED BY
PARSONS
THE RALPH M. PARSONS CO. - PARSONS MAIN, INC. - ENGINEERING-SCIENCE, INC.
CINCINNATI, OHIO

PROJECT NAME
OU1 REMEDIATION SYSTEM DESIGN

DRAWING TITLE
MATERIAL HANDLING PLAN
DRYING FACILITY

DRAWN BY	DATE	LEAD ENGINEER	DATE	CHECKED BY	DATE
M.TERRY	09-13-95			J. ROBINSON	9/28/95

PLANT/BLDG NO | FLOOR | SCALE 1/16" = 1'-0" | CLASS

SUBMITTED FOR APPROVAL | FERNCO CRU APPROVAL N/A

A-E | DATE | DATE

DOE PROJECT NO	FEMP PROJECT NO	DRAWING INDEX CODE NO	SHEET NO	REV. NO
	WBS 1.1.1.1.1.3.1 00-90701	SK-M-03919	M0014	E

PREPARED UNDER PARSONS PROJECT ORDER NUMBER
WPRAP/P0145

392

skm03920.m po145@ws319. Fri Mar 15 13:45:02 CST 1996

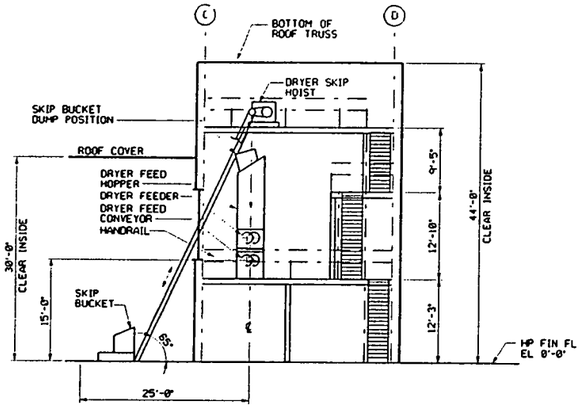

SECTION A REF M03920 M03919

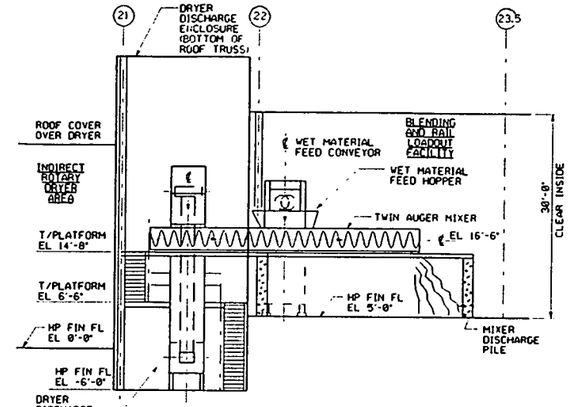

SECTION D REF M03920 M03921

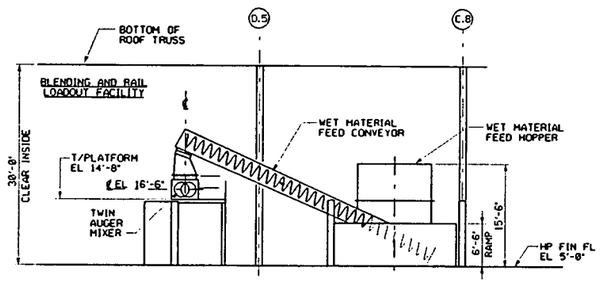

SECTION B REF M03920 M03921

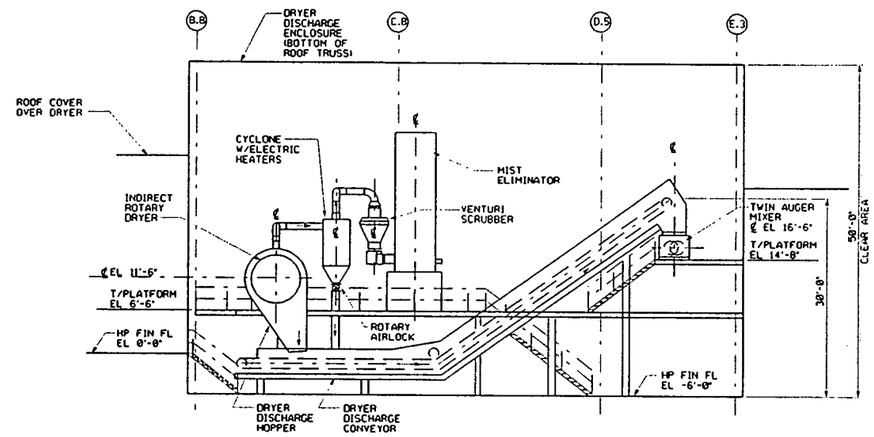

SECTION E REF M03920 M03921

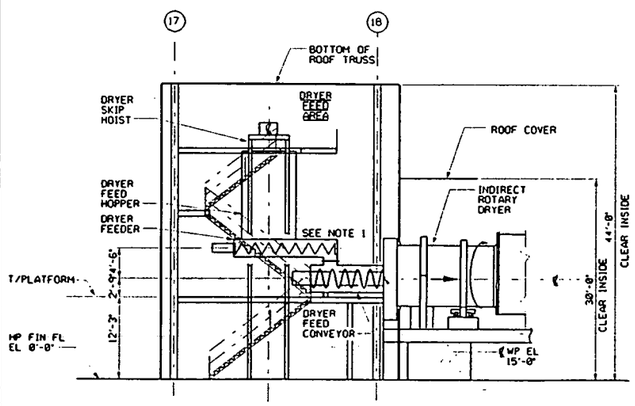

SECTION C REF M03920 M03919

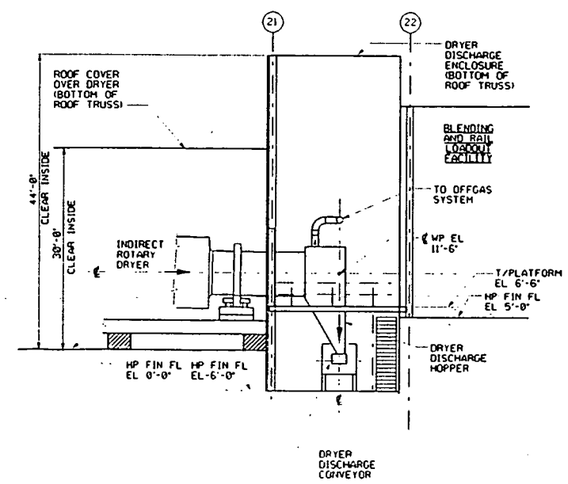

SECTION F REF M03920 M03921

NOTES

1. THIS AREA IS USED FOR MAINTENANCE OF DRYER FEED END EQUIPMENT. AREA IS ENCLOSED AND VENTILATED FOR PROTECTION FROM INCLEMENT WEATHER.

~~285~~
2038

REF DWG NO.	DRAWING TITLE
SK-M-03919	MATERIAL HANDLING PLAN DRYING FACILITY
SK-M-03921	MATERIAL HANDLING PLAN BLENDING AND RAIL LOADOUT FACILITY

PRELIMINARY
NOT FOR CONSTRUCTION

REV. NO.	ISSUE OR REVISION PURPOSE - DESCRIPTION	A-E INITIALS AND DATE	FERNCO INITIALS AND DATE	DATE
E	ISSUED FOR EPA SUBMITTAL PREFINAL DESIGN PACKAGE			3/28/96
D	ISSUED FOR EPA SUBMITTAL PREFINAL DESIGN PACKAGE			2/19/96
C	INCORPORATE CLIENT COMMENTS (CLIENT COMMENTS INCORPORATED)			
B	INCORPORATE CLIENT COMMENTS (CLIENT COMMENTS INCORPORATED)			10/23/95
A	ISSUED FOR CONCEPTUAL DESIGN			

UNITED STATES
DEPARTMENT OF ENERGY
FERNALD ENVIRONMENTAL MANAGEMENT PROJECT

THIS DRAWING PREPARED BY
PARSONS
THE RALPH M. PARSONS CO. - PARSONS MAIN, INC. - ENGINEERING-SCIENCE, INC.
CINCINNATI, OHIO

PROJECT NAME
OU1 REMEDIATION SYSTEM DESIGN

DRAWING TITLE
MATERIAL HANDLING
SECTIONS
DRYING FACILITY

DRAWN BY	DATE	LEAD ENGINEER	DATE	CHECKED BY	DATE
H.TERRY	09-13-95			J. ROBINSON	9-28-95

PERMIT/ID DOC NO	FLOOR	SCALE	CLASS
		1/8" = 1'-0"	

SUBMITTED FOR APPROVAL	FERNCO CRU APPROVAL
A-E DATE	N/A DATE

PREPARED UNDER PARSONS PROJECT ORDER NUMBER	DOE PROJECT NO.	FEMP PROJECT NO.	DRAWING SHEET CODE NO.	SHEET NO.	REV. NO.
WPRAP/P0145		WBS 1.1.1.1.1.3.1 00-90701	SK-M-03920	M0015	E

393

skm03921.m po145@ws319. Fri Mar 15 12:39:41 CST 1996

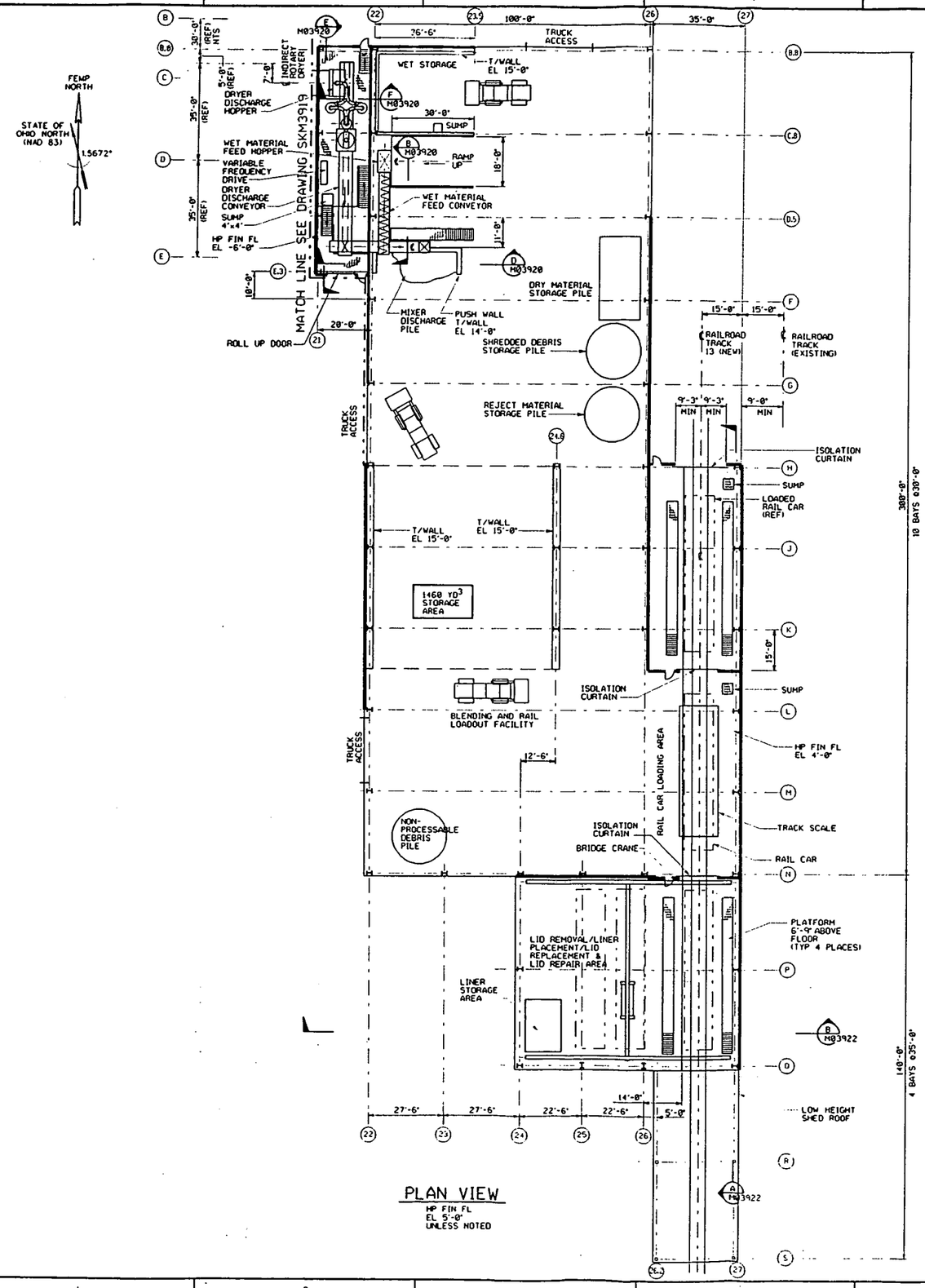

PLAN VIEW

HP FIN FL EL 5'-0" UNLESS NOTED

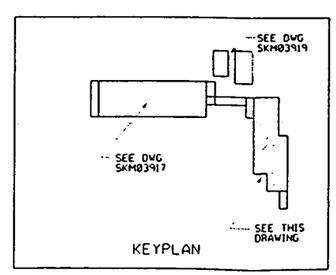

KEYPLAN

394

NOTES

1. DURING HANDLING OF SEMI-DRY AND DRY WASTE, MOBILE WATER TRUCKS WITH WATER SPRAYS WILL BE USED TO CONTROL FUGITIVE PATICULATE EMISSIONS IN THE AREA.
2. THE EAST SIDE OF THIS AREA IS COVERED TO THE GROUND LEVEL TO PREVENT RAIN WATER INFILTRATION.
3. MOBILE EQUIPMENT WILL BE SUPPLIED WITH ENGINEERED CONTROLS TO MAINTAIN WORKER EXPOSURE ALARA.

~~285~~ 2038

LEGEND

- PARTIAL WALL
- FULL HEIGHT WALL
- CONCRETE PAD

REF DWG NO.	DRAWING TITLE
SK-M-03919	MATERIAL HANDLING PLAN DRYING FACILITY
SK-M-03920	MATERIAL HANDLING SECTIONS RAIL LOADOUT
SK-M-03922	MATERIAL HANDLING SECTIONS BLENDING AND RAIL LOADOUT FACILITY

PRELIMINARY
NOT FOR CONSTRUCTION

REV. NO.	ISSUE OR REVISION PURPOSE - DESCRIPTION	A-E	FEMWO	DATE
E	ISSUED FOR EPA SUBMITTAL PREFINAL DESIGN			3/28/96
D	ISSUED FOR EPA SUBMITTAL PREFINAL DESIGN			2/15/96
C	ISSUED FOR CONCEPTUAL DESIGN (CLIENT COMMENTS INCORPORATED)			
B	ISSUED FOR CONCEPTUAL DESIGN (CLIENT COMMENTS INCORPORATED)			10/23/95
A	ISSUED FOR CONCEPTUAL DESIGN			

INITIALS AND DATE

UNITED STATES
DEPARTMENT OF ENERGY
FERNALD ENVIRONMENTAL MANAGEMENT PROJECT

THIS DRAWING PREPARED BY
PARSONS
THE RALPH M. PARSONS CO. - PARSONS MAIN, INC. - ENGINEERING-SCIENCE, INC.
CINCINNATI, OHIO

PROJECT NAME
OU1 REMEDIATION SYSTEM DESIGN

DRAWING TITLE
MATERIALS HANDLING PLAN
BLENDING AND RAIL LOADOUT FACILITY

DRAWN BY	DATE	LEAD ENGINEER	DATE	CHECKED BY	DATE
NH TERRY	09-13-95			K HADDEN	09-28-95

PLANT/BLDG NO. | FLOOR | SCALE 1/16" = 1'-0" | CLASS

SUBMITTED FOR APPROVAL | FEMPCO CRU APPROVAL N/A

A-E LEAD PROJECT NO. | DATE | FEMP PROJECT NO. WBS 1.1.1.1.1.3.1 00-90701 | DATE | DRAWING SHEET CODE NO. SK-M-03921 | SHEET NO. M0016 | REV. NO. E

PREPARED UNDER PARSONS PROJECT ORDER NUMBER WPRAP/P0145

[redacted]

skm03922.m po145@ws319. Fri Mar 15 13:53:10 CST 1996

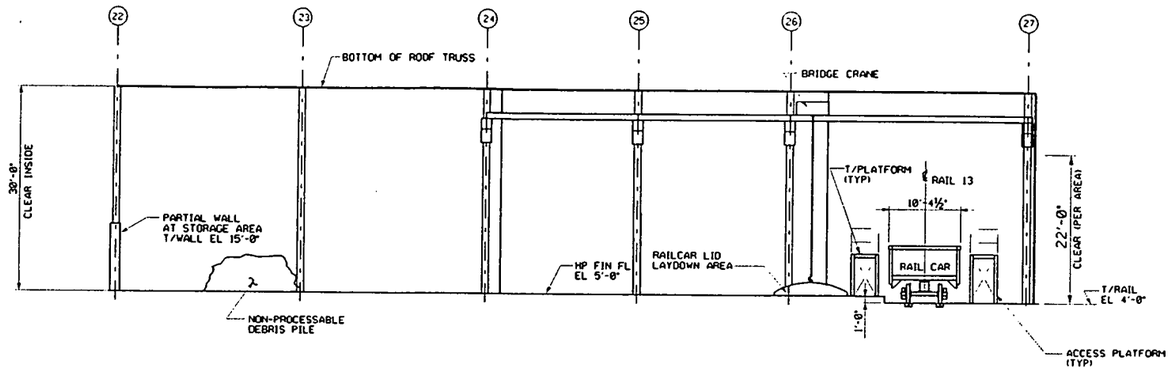

SECTION (B) REF M03922 M03921

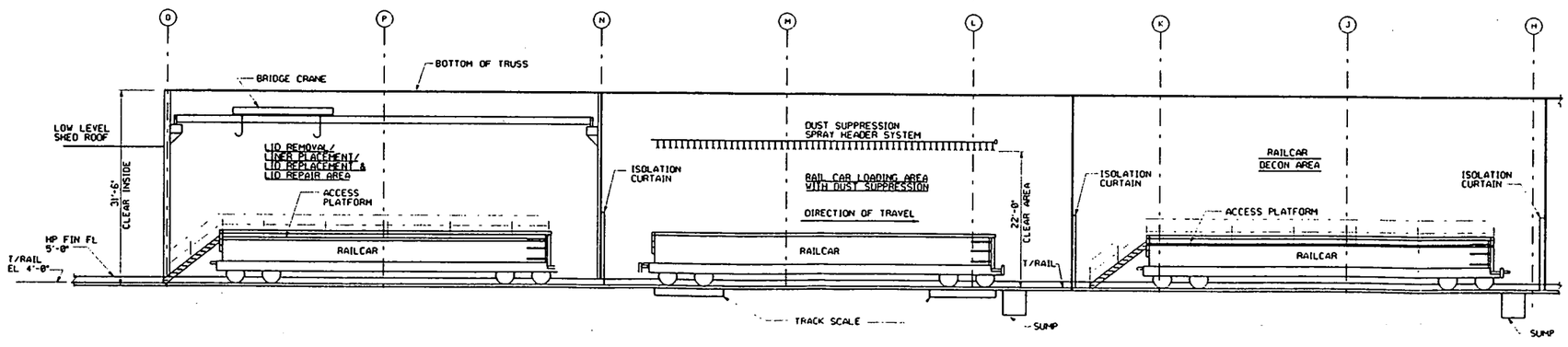

SECTION (A) REF M03922 M03921

395

NOTES

~~285~~

2038

REF DWG NO.	DRAWING TITLE
SK-M-03917	PLAN - WASTE PREPARATION AREA
SK-M-03921	PLAN - BLENDING AND RAIL LOADOUT FACILITY

PRELIMINARY
NOT FOR CONSTRUCTION

REV. NO.	ISSUE OR REVISION PURPOSE - DESCRIPTION	A-E	FERNCO	DATE
E	ISSUED FOR EPA SUBMITTAL PREFINAL DESIGN			3/28/96
D	ISSUED FOR EPA SUBMITTAL PREFINAL DESIGN			2/19/96
C	ISSUED FOR CONCEPTUAL DESIGN (CLIENT COMMENTS INCORPORATED)			
B	ISSUED FOR CONCEPTUAL DESIGN (CLIENT COMMENTS INCORPORATED)			10/23/95
A	ISSUED FOR CONCEPTUAL DESIGN			

INITIALS AND DATE

UNITED STATES
DEPARTMENT OF ENERGY
FERNALD ENVIRONMENTAL MANAGEMENT PROJECT

THIS DRAWING PREPARED BY
PARSONS
THE RALPH M. PARSONS CO. - PARSONS MAIN, INC. - ENGINEERING-SCIENCE, INC.
CINCINNATI, OHIO

PROJECT NAME
OU1 REMEDIATION SYSTEM DESIGN

DRAWING TITLE
MATERIAL HANDLING
SECTIONS
BLENDING AND RAIL LOADOUT FACILITY

DRAWN BY	DATE	LEAD ENGINEER	DATE	CHECKED BY	DATE
M.TERRY	09-13-95			K. MADDEN	9-28-95
PLANT/BLDG NO.		FLOOR		SCALE 1/8 "=1"	CLASS
SUBMITTED FOR APPROVAL		FERNCO CRU APPROVAL N/A			
A-E DOE PROJECT NO.	DATE	TEMP PROJECT NO. WBS 1.1.1.1.1.3.1 00-90701	DATE	DRAWING INDEX CODE NO. SK-M-03922	SHEET NO. M0017 / REV. NO. E

PREPARED UNDER PARSONS PROJECT ORDER NUMBER WPRAP/P0145

~~225~~

2038

SUPPLEMENTAL PLAN

~~205~~

2038

Description of Site Preparation Activities

2038

Description of Site Preparation Activities

Operable Unit 1
Project Order 145

March 1996
Revision E

Environmental Remedial Action Project
Fernald Environmental Management Project
Fernald, Ohio
FERMCO Subcontract No. 2-21487

PARSONS

25 Merchant Street
Cincinnati, Ohio 45246

396

DESCRIPTION OF SITE PREPARATION ACTIVITIES

There are a number of site preparation activities to improve and upgrade the site. Some, such as the Site Improvement Plan (SIP), prepare the site for subsequent construction of the remedial facilities and others, such as for the on-site rail improvements, provide the final upgrades.

1) Site Improvement Plan

The Site Improvement Plan comprises the drawings and specifications for the early civil improvements necessary to prepare the site for the construction and operation of the OU1 remediation facilities. The plan includes the following documents:

Site Improvement Plan Drawings

The following drawings are included:

a) Site Plan/Demolition Plan: This drawing depicts the general improvements to the site, and removal of some existing utilities and monitoring wells. The major improvements are:

- Site clearing and grading for the construction of the waste processing facility.
- The embankment for the new rail spur to the south end of the loadout area and for the west leg of the "wye" at the north side of the site. Fill from the site will be used for the rail embankment.
- The stormwater management pond (SWM), which collects rainwater from the entire OU1 process area (approximately 11 acres) and retains it for pumping to the Biodenitrification Surge Lagoon. The SWM is sized for a 25-year, 24-hour storm based on FEMP design requirements.
- The storm spillway which, in the event of a storm greater than the 25-year, 24-hour storm, directs overflow from the SWM through two retention areas and then to the existing drainage ditch north of the existing rail spur. The spillway is sized for a 100-year, 24-hour storm.

A changeout and restroom facility for workers entering and leaving the processing area has recently been completed to meet construction and operating needs for the OU1 remediation facilities.

b) Site Grading Plan and Details: These drawings show the grading for the berms for the SWM, culverts, and the subgrade for future railroad tracks addition.

c) Utility Plan and Profiles: These drawings show the location of subsurface utilities. The only subsurface utilities to be installed for the OU1 processing area are water lines for fire protection, and the force main from the SWM pumping station to the Biodenitrification Surge Lagoon. All other utilities, including natural gas, wastewater,

and process water, will be installed in overhead pipe racks and are to be shown in the Plant Facilities Engineering package. It is necessary to ensure that existing utilities selected for tie-in of the new utilities will remain in operation throughout this project. Stormwater controls from other areas need to be maintained and kept separate from the proposed system to function properly.

d) Borrow Area Location: This drawing shows the location where fill soil will be obtained. The site improvements plan work is estimated to have a borrow requirement of approximately 20,000 cubic yards of fill soil to complete all earthwork. Fill required for the on-site rail improvements would also be obtained at the same location. Geotechnical investigations have qualified the borrow area soils as acceptable. The excavation and grading in the borrow area will be planned and completed to maintain drainage, stable excavation slopes, and access to the borrow area.

There are a total of 19 drawings in the SIP.

Site Improvement Plan Specifications

The following sections are included:

a) Section 01010, General Requirements
b) Section 01011, Submittals
c) Section 01012, Schedule of Drawings
d) Section 02110, Site Clearing, including removal of surface debris, clearing and grubbing, removal of existing fencing and utilities, and topsoil excavation.
e) Section 02200, Earthwork, including excavation for SWM Pond, pavements, structures, and roadways; trenching; fill compaction; site preparation and restoration; and backfilling and compaction.
f) Section 02270, Erosion Control, including soil erosion and sedimentation control for areas which are graded or disturbed.
g) Section 02300, Boring and Jacking, including rock excavation, backfill, and shoring required for installation of underground utilities underneath the rail tracks.
h) Section 02667, Site Water Lines, including pipe, fittings, accessories, valves, valve boxes, and fire hydrants for underground site water lines.
i) Section 02713, Detention Pond Liner Geomembrane, including geomembrane materials and installation for the SWM.
j) Section 02720, Site Drainage, including outfall protection, storm drainage, catch basins, and manholes.
k) Section 02733, Pump Station, including installation of the pump station at the SWM.
l) Section 02831, Chain Link Fences.
m) Section 02900, Seeding, including seed and mulch to stabilize disturbed areas, and maintenance of seeded areas.
n) Section 03001, Concrete.

These 14 specifications cover all main areas of the early site improvement work. The technical specifications and drawings in tandem with FERMCO's general construction specification identify the work to be performed.

The SIP drawings presented in the following section were issued Certified for Construction, Revision 0, on February 14, 1996. They have been revised and are currently undergoing a final review before reissue as Revision 1. Revision 1 will reflect changes made in the processing facilities as a result of value engineering studies. Specifications did not change and were used to purchase material to start construction on April 4.

Revision 0 drawings are included in this package to avoid issuing unchecked drawings. Revision 1 will be issued as a supplement to this pre-final package.

Revision 1 of the SIP drawings is expected to be issued in late March 1996 to update the package to include all value engineering related revisions. The SIP changes incorporated in Revision 1 affected the following drawings:

Drawing Title	Drawing No	Rev	Sheet No
Drawing Index	91X-5900-X-00216	0	X0002
Civil-Site Plan/ Demolition Plan	91X-5900-G-00135	0	G0001
Civil-Utilities Plan	91X-5900-G-00141	0	G0002
Civil-Grading Plan Sheet 1 of 2	91X-5900-G-00136	0	G0003
Civil-Grading Plan Sheet 2 of 2	91X-5900-G-00137	0	G0004
Civil Grading Sections	91X-5900-G-00175	0	G0005
Civil-Utility Profiles Fire Protection Line	91X-5900-G-00176	0	G0006
Civil Utility Profile Force Main	91X-5900-G-00177	0	G0007
Civil Utility Profile Culvert	91X-5900-G-00178	0	G0008
Civil Utility Profiles Storm Sewer	91X-5900-G-00212	0	G0009
Civil Details Sheet 2 of 6	91X-5900-G-00144	0	G0011
Civil Details Sheet 4 of 6	91X-5900-G-00146	0	G0013

The value engineering related changes included the following:

1) The future remedial facilities (shown by dashed lines on the drawings) were revised to the downsized facility footprint. Area was reserved on the north side of the waste preparation area for potential future expansion.

2) Elevations were adjusted throughout the drawing set to be consistent with the latest update of the site topographical survey data.

3) The northward relocation of the waste preparation area, accomplished during the value engineering activity, allowed the proposed road along the toe of the berm of the Biodenitrification Surge Lagoon to also be moved northward. That allowed grading changes in that area that eliminated 450 feet of retaining wall along the toe of the berm.

4) Grades in the immediate area of the remedial facility were adjusted as necessary to be consistent with the reconfigured general arrangement of the facility. The blending and loadout area floor is 1 foot above the top of rail; the waste preparation area floor will slope from north to south approximately following the existing grade.

5) Relocation or removal of existing features (roads, monitoring wells, etc.) was reduced to be consistent with the downsized and reconfigured facility.

6) The depth of the storm water management (SWM) basin was reduced. Also, the piping for discharge of the greater than 25 year storm flow was rerouted through both retention areas to the north of the SWM.

7) A top/subgrade centerline profile was included for the railroad embankment for the west leg of the "wye".

8) The underground piping at the low nitrate tank was called out for removal on the site demolition plan.

2) Description of Utility Requirements

This document describes the provision of utilities to support the waste treatment process. It includes the few utilities with the Site Improvements Plan and also the remaining utilities that will be installed with the final civil, structural, and architectural package.

3) Description of On-Site Rail Improvements

This document describes the rail upgrades and construction required to support the shipment of treated waste, including the receiving, loading, storing, and moving of full and empty railcars. A separate design package is being prepared for the rail system improvements work.

A substantial part of the on-site rail improvements work is for construction of a railyard for temporary holding of the empty and full railcars. This new railyard will be built in the northeast area of the site and will consist of a series of parallel sidings with a total of approximately 10,000 feet of storage track.

As an initial construction activity for the railyard, 6 inches of soil will be stripped from the area (approximately 23 acres) and stockpiled for anticipated future disposal in the On-site Disposal Facility (OSDF). Also, depending on the result of real time sampling that would confirm meeting the Final Remediation Limit (FRL), additional soil (beyond the 6 inches) may have to be stripped and stockpiled. Sampling and analysis for acceptability for disposal in the OSDF and for confirmation of meeting FRL's will be detailed in a forthcoming Soil Remediation Project (SRP) Remedial Action Work Plan (RAWP) and will be performed by SRP. Management of the soil stockpile will be as described in the above SRP RAWP. Other aspects of soil management will be according to the Materials Management Plan included as Appendix A of the Excavation Plan.

The construction of the railyard will follow the soil stripping activity. It will include the necessary earthwork to meet planned track grades and provide final drainage grades, ballasting, and the track construction. Associated drainage work of yard, track, and affected areas will also be performed. That design work will be included in the separate on-site rail system improvements package expected to be complete in May 1996. Construction of the on-site rail improvements is scheduled from October 1996 to May 1997.

4) Off-Site Rail Upgrades

This document describes the work to be performed by CSX to repair or upgrade the rail, switches, trestles, and culverts and other features from the FEMP to Cottage Grove, Indiana, and describes the operational sequencing of receiving empty railcars, filling and staging them, and moving them off site.

UNITED STATES DEPARTMENT OF ENERGY

FERNALD ENVIRONMENTAL MANAGEMENT PROJECT

OU1 REMEDIATION SYSTEM DESIGN

SITE IMPROVEMENT

PROJECT ORDER 145

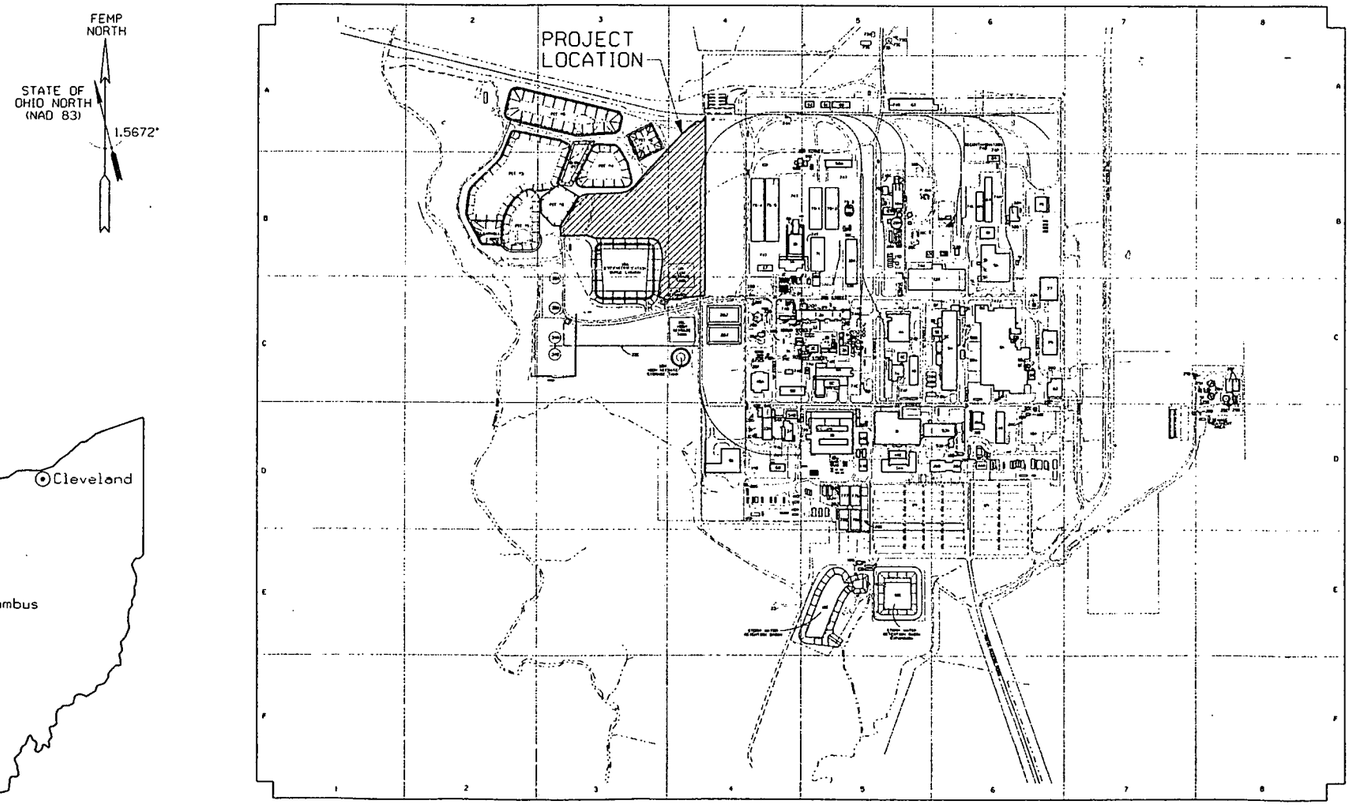

PARSONS

The Ralph M. Parsons Company • Parsons Main, Inc. • Engineering-Science, Inc.

ARCHITECTS - ENGINEERS
CINCINNATI, OHIO

NOTES

~~P-085~~

2038

REF DWG NO.	DRAWING TITLE
91X-5900-X-00216	DRAWING INDEX
91X-5900-X-00217	LEGEND AND SYMBOLS

REV NO	REVISION PURPOSE - DESCRIPTION	PE	FERNCO	DATE
0	CERTIFIED FOR CONSTRUCTION		NA	3/4/96

UNITED STATES DEPARTMENT OF ENERGY
FERNALD ENVIRONMENTAL MANAGEMENT PROJECT

THIS DRAWING PREPARED BY
PARSONS
THE RALPH M. PARSONS CO. - PARSONS MAIN, INC. - ENGINEERING-SCIENCE, INC.
CINCINNATI, OHIO

PROJECT NAME
OU1 REMEDIATION SYSTEM DESIGN
SITE IMPROVEMENT

DRAWING TITLE
PROJECT TITLE SHEET

DRAWN BY	DATE	LEAD ENGINEER	DATE	CHECKED BY	DATE
K.L. RABBITT	01/05/96	[signature]	3/4/96	T. AFSHAR	01/15/96

PLANT/FIELD NO	FLOOR	SCALE	CLASS
		NONE	

SUBMITTED FOR APPROVAL: [signature] PE DATE
FERNCO CRU APPROVAL: N/A DATE

PREPARED UNDER PARSONS PROJECT ORDER NUMBER	FCE PROJECT NO	FEMP PROJECT NO	DRAWING INDEX CODE NO	SHEET NO	REV NO
WPRAP/P0145		WBS 1.1.1.1.1.3.1 00-90701	91X-5900-X-00215	X0001	0

402

INDEX OF DRAWINGS

INDEX CODE NO.	DRAWING NO.	SHEET NO.	REVISION NO.	DRAWING TITLE	REMARKS
	91X-5900-X-00215	X0001	0	PROJECT TITLE SHEET	
	91X-5900-X-00216	X0002	0	DRAWING INDEX	
	91X-5900-X-00217	X0003	0	LEGEND AND SYMBOLS	
	91X-5900-G-00135	G0001	0	CIVIL - SITE PLAN/DEMOLITION PLAN	
	91X-5900-G-00141	G0002	0	CIVIL- UTILITY PLAN	
	91X-5900-G-00136	G0003	0	CIVIL - GRADING PLAN - SHEET 1 OF 2	
	91X-5900-G-00137	G0004	0	CIVIL - GRADING PLAN - SHEET 2 OF 2	
	91X-5900-G-00175	G0005	0	CIVIL - GRADING SECTIONS	
	91X-5900-G-00176	G0006	0	CIVIL - UTILITY PROFILE - FIRE PROTECTION LINE	
	91X-5900-G-00177	G0007	0	CIVIL - UTILITY PROFILE - FORCE MAIN	
	91X-5900-G-00178	G0008	0	CIVIL - UTILITY PROFILE - CULVERT	
	91X-5900-G-00212	G0009	0	CIVIL - UTILITY PROFILES - STORM SEWER	
	91X-5900-G-00143	G0010	0	CIVIL - DETAILS - SHEET 1 OF 6	
	91X-5900-G-00144	G0011	0	CIVIL - DETAILS - SHEET 2 OF 6	
	91X-5900-G-00145	G0012	0	CIVIL - DETAILS - SHEET 3 OF 6	
	91X-5900-G-00146	G0013	0	CIVIL - DETAILS - SHEET 4 OF 6	
	91X-5900-G-00206	G0014	0	CIVIL - DETAILS - SHEET 5 OF 6	
	91X-5900-G-00207	G0015	0	CIVIL - DETAILS - SHEET 6 OF 6	
	91X-5900-G-00214	G0016	0	CIVIL - BORROW AREA LOCATION	

NOTES

~~285~~

2038

REF DWG NO.	DRAWING TITLE
91X-5900-X-00217	LEGEND AND SYMBOLS

REV NO	ISSUE OR REVISION PURPOSE - DESCRIPTION	A/E	FERNCO	DATE
0	CERTIFIED FOR CONSTRUCTION		NA	7/13/98

APPROVALS AND DATE

UNITED STATES DEPARTMENT OF ENERGY
FERNALD ENVIRONMENTAL MANAGEMENT PROJECT

THIS DRAWING PREPARED BY
PARSONS
THE RALPH M. PARSONS CO. - PARSONS MAIN, INC. - ENGINEERING-SCIENCE, INC.
CINCINNATI, OHIO

PROJECT NAME
OUI REMEDIATION SYSTEM DESIGN
SITE IMPROVEMENT

DRAWING TITLE
DRAWING INDEX

DRAWN BY	DATE	LEAD ENGINEER	DATE	CHECKED BY	DATE
K.L. RABBITT	01/05/96		1/14/96	Y. AFSHAR	01/15/96

PLANT/BLDG NO	FLOOR	SCALE	CLASS
		NONE	

SUBMITTED FOR APPROVAL: A.E. DATE 7/13/98
FERNCO CRU APPROVAL: NA DATE

403

PREPARED UNDER PARSONS PROJECT ORDER NUMBER	DOE PROJECT NO	FEMP PROJECT NO	DRAWING INDEX CODE NO	SHEET NO	REV NO
WPRAP/P0145		WBS 1.1.1.1.1.3.1 00-90701	91X-5900-X-00216	X0002	0

[redacted]

GENERAL LEGEND

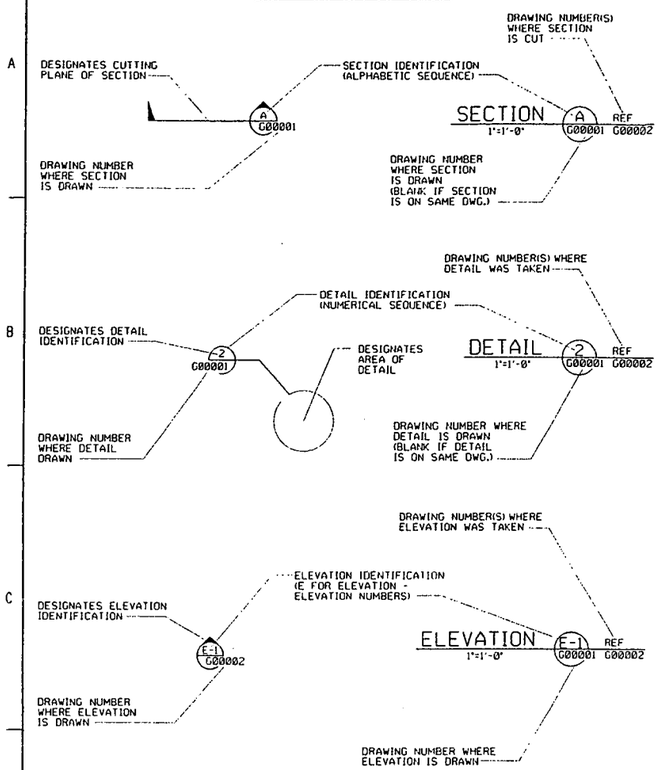

NOTE:

ABBREVIATED DRAWING NUMBERS WILL BE USED FOR ALL SECTIONS, DETAILS, ELEVATIONS, AND WITHIN NOTES AND CALL OUTS IN THE BODY OF THE DRAWING.

FOR EXAMPLE: 95X-5900-G-00002 = DRAWING NUMBER
G00002 = ABBREVIATED DRAWING NUMBER

DIMENSIONING:

DIMENSIONS AND/OR ELEVATIONS MARKED THUS (+/-) SHALL BE VERIFIED IN THE FIELD BY CONTRACTOR.

USE DIMENSIONS AS SHOWN. DO NOT SCALE.

NTS (NOT TO SCALE) IS SHOWN ONLY WHERE DIMENSION IS OBVIOUSLY OUT OF SCALE.

UTILITY SYMBOLS

EXISTING		PROPOSED
ST	STORM SEWER	ST
SN	SANITARY SEWER	SN
FG	FUEL GAS	FG
DW	DRINKING WATER	DW
FQ1	FIRE PROTECTION	FQ
LS	LIVE STEAM	LS
WS	WATER SUPPLY	WS
WR	COOLING WATER RETURN	WR
TW	PROCESS WATER	TW
CE	CONTAMINATE WATER	CE
FT	FILTRATE OR EFFLUENT	FT
DF	DEIONIZED FEED	DF
PW	DEIONIZED WATER	PW
BR	BRINE	BR
RW	RAW WATER	RW
A	ALARM	A
CN	STEAM CONDENSATE	CN
VE	VENT LINES	VE
SD	SUB-SURFACE DRAINAGE	SD
SL	SUMP LIQUOR	SL
E	ELECTRICAL	E
OE	OVERHEAD ELECTRICAL	OE
T	TELEPHONE	T
G	ELECTRIC GROUND	G
PA	PLANT AIR	PA
SA	INSTRUMENT AIR SUPPLY	SA
	FORCE MAIN	FM
	ABANDONED	

BALLOON LEGEND

- PIV — POST INDICATOR VALVE
- SMH — SANITARY MANHOLE
- EMH — ELECTRICAL MANHOLE
- TMH — TELEPHONE MANHOLE
- CB — STORM SEWER CATCH BASIN
- HFH — HIGH PRESSURE FIRE HYDRANT
- LFH — LOW PRESSURE FIRE HYDRANT

DESIGNATES PIPELINE — FO 3 — COORDINATE POINT

GRADING SYMBOLS

EXISTING		PROPOSED
X 584.9	SPOT ELEVATION	X 589.4
584	CONTOUR - MINOR	584
585	CONTOUR - MAJOR	585
(TOC)	SLOPE INDICATOR	(TOC)

SYMBOLS LEGEND

EXISTING		PROPOSED
	POST INDICATOR VALVE (PIV)	
	FIRE HYDRANT (FH)	
	MANHOLE (MH)	OR
	CATCH BASIN (CB)	D
	POWER POLE/LIGHT POLE	
	PIPE SUPPORT	
	ELECTRICAL MANHOLE	E
	TELEPHONE MANHOLE	T
	STREET WASHERS	
	VALVE BOX	
	MONITORING WELL	
	SURFACE DRAINAGE FLOW	
	POWER POLE	
	GRAVEL ROADWAY/DRIVEWAY	
	ASPHALT ROADWAY/DRIVEWAY	
	CONCRETE PAD/ ROADWAY/DRIVEWAY	
	BUILDING/TRAILER	
	RAILROAD TRACK	
	OU BOUNDARY	
	FENCE	
	TREE LINE	
	DECIDUOUS TREE	
	CONIFEROUS TREE	
	CENTERLINE DRAINAGE DITCH	
	RIVER/CREEK	
	TO BE REMOVED	
	SILT FENCE	
	ELECTRICAL TRANSFORMER	T
	TRANSMISSION TOWER	
	HEADWALL	OR
HM	BENCH MARK	
	CONSTRUCTION/WIND BARRIER FENCE	
	SIGN	
	BOLLARD/GUARD POST	
PB	ELECTRICAL PULL BOX	
	SURVEY CONTROL POINT	
	ROAD CENTERLINE OR BASELINE	
	BEND	OR
	TEE	
	THRUST BLOCK	
	REDUCER	
W OR U	UNKNOWN	
	STRAW BALE SILT BARRIER	
	FENCE GATE	

NOTES

ABBREVIATIONS

CMP	CORREGATED METAL PIPE
GML	GEO MEMBRANE LINER
HDPE	HIGH DENSITY POLYETHYLENE
PC	POINT OF CURVATURE
PS	POINT OF SWITCH
PT	POINT OF TANGENCY
SWM	STORM WATER MANAGEMENT
WWF	WELDED WIRE FABRIC

2038

[redacted]

REF DWG NO.	DRAWING TITLE
91X-5900-X-00216	DRAWING INDEX

REV NO	ISSUE OR REVISION PURPOSE - DESCRIPTION	INITIALS	TEAM LEADER	DATE
0	CERTIFIED FOR CONSTRUCTION		NA	1/16/96

UNITED STATES DEPARTMENT OF ENERGY
FERNALD ENVIRONMENTAL MANAGEMENT PROJECT

THIS DRAWING PREPARED BY
PARSONS
THE RALPH M. PARSONS CO. - PARSONS MAIN, INC. - ENGINEERING-SCIENCE, INC.
CINCINNATI, OHIO

PROJECT NAME
OU1 REMEDIATION SYSTEM DESIGN
SITE IMPROVEMENT

DRAWING TITLE
LEGEND AND SYMBOLS

DRAWN BY	DATE	LEAD ENGINEER	DATE	CHECKED BY	DATE
K.L. RABBITT	01/05/96		1/16/96	Y. AFSHAR	01/15/96

PLANT/BLDG NO	FLOOR	SCALE	CLASS
		NONE	

SUBMITTED FOR APPROVAL: 1/16/96 (DATE) — FERNCO CRU APPROVAL: NA (DATE)

404

PREPARED UNDER PARSONS PROJECT ORDER NUMBER	DOE PROJECT NO.	TEAM PROJECT NO	DRAWING REF. CODE NO	SHEET NO	REV NO
WPRAP/P0145		WBS 1.1.1.1.1.3.1 00-90701	91X-5900-X-00217	X0003	0

[redacted]

2038

Civil Site Plan

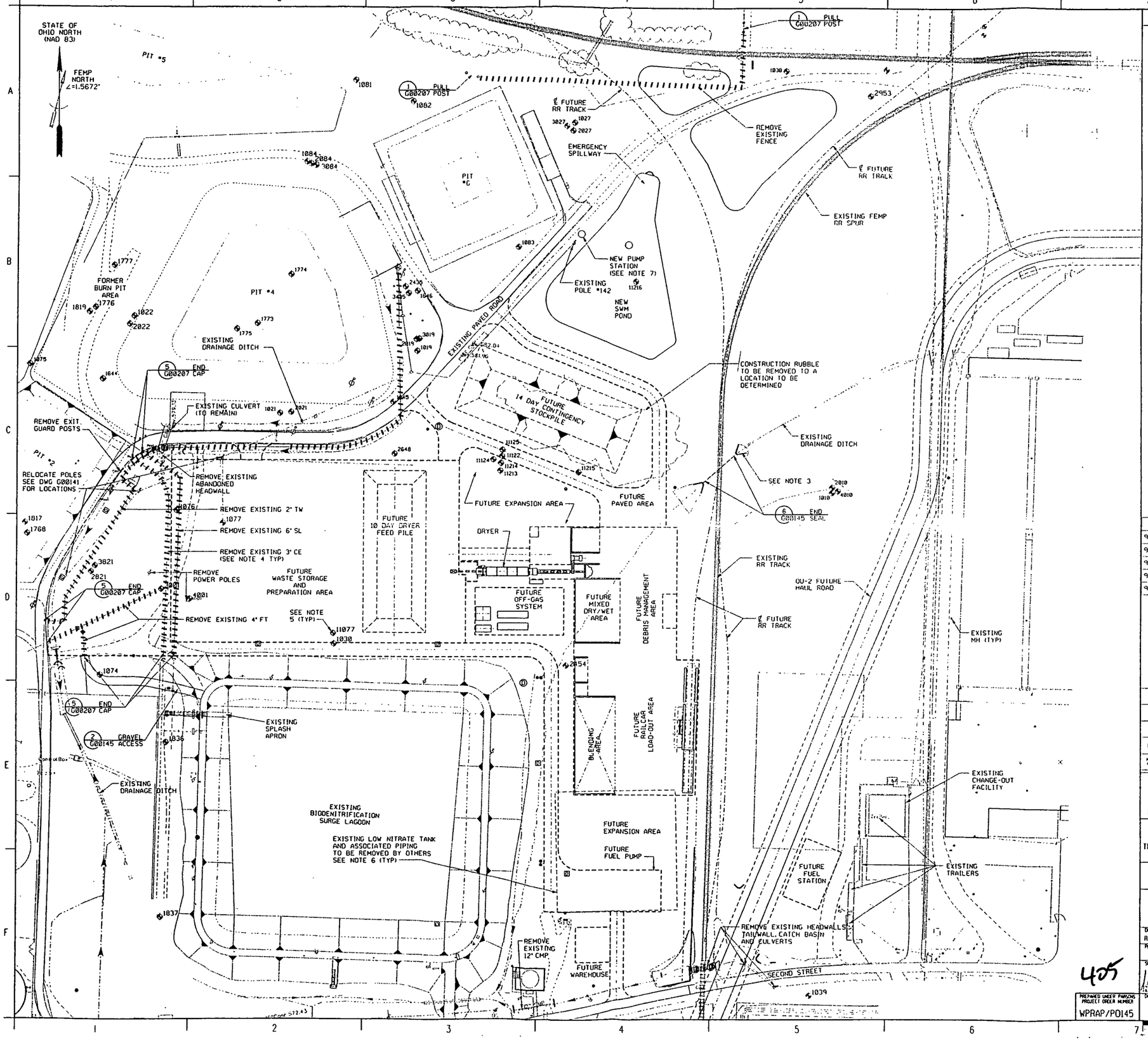

NOTES

1. EXISTING CONDITIONS SHOWN ON THIS DRAWING WERE PREPARED FROM THE DOCUMENTS LISTED BELOW.

   EXISTING SITE DATA SOURCE (IN PLANT FILES)
   FEMP CONTRACTOR PROJECT DESIGN DOCUMENTS
   B.L. PAYNE AND ASSOCIATES TOPOGRAPHICAL SURVEY, 1995

2. DESIGN AND CONSTRUCTION OF WAREHOUSE, FUEL STATION, RAILROAD TRACKS, WASTE STORAGE FACILITY, WASTE PROCESS AND HANDLING FACILITIES, RADIOLOGICAL CONTROL POINT AND ACCESS ROADS WILL BE DONE BY OTHERS.

3. REMOVE EXISTING CONCRETE HEADWALLS. REMOVE EXISTING 30" RCP TO THE NEAREST JOINT AND SEAL BOTH ENDS WITH CONCRETE. GRADING AND DRAINAGE WORK SOUTH TO SECOND STREET IS TO BE COMPLETED AND IN SERVICE PRIOR TO 30" RCP ABANDONMENT.

4. FERMCO WILL PROPERLY ISOLATE AND DRAIN LINES PRIOR TO REMOVAL. CONTRACTOR IS TO VERIFY THAT THIS WORK HAS BEEN COMPLETED PRIOR TO DEMOLITION.

5. THE FOLLOWING MONITORING WELLS TO BE REMOVED/MODIFIED BY FERMCO:

MW	EXISTING GRADE	PROPOSED GRADE	REMARKS
2454	576.5	583.0	MODIFY
2648	582.6	578.6	MODIFY
2821	581.0	577.7	MODIFY
3001	585.0	580.2	MODIFY
3821	581.0	577.9	MODIFY
4001	585.0	579.3	MODIFY
1038	—	—	REMOVE
1074	—	—	REMOVE
1076	—	—	REMOVE
1077	—	—	REMOVE
11077	—	—	REMOVE
11122	—	—	REMOVE
11213	—	—	REMOVE
11214	—	—	REMOVE
11216	—	—	REMOVE
1030	—	—	ABANDONED
11124	—	—	ABANDONED
11125	—	—	ABANDONED
11215	—	—	ABANDONED

6. ALL UNDERGROUND UTILITIES ARE NOT SHOWN ON THIS PLAN FOR CLARITY. SEE DRAWING 91X-5900-G-00141 FOR LOCATION OF UNDERGROUND UTILITIES.

7. SERVE NEW PUMP STATION FROM TAP ON 4/C #2 CIRCUIT ON POLE 142. MOUNT 100 A NON-FUSED DISCONNECT SWITCH, NEMA 3R OR 4 ON POLE 142, 54 INCHES ABOVE GRADE. TAP AERIAL CIRCUIT WITH 4-1/C #2 THHN / THWN WIRE IN 1-1/2" RGS CONDUIT WITH WEATHERHEAD. FROM DISCONNECT SWITCH ROUTE CONDUCTORS BELOW GRADE TO PUMP STATION MAIN POWER TERMINALS. DIRECT BURY WIRE MINIMUM OF 36 INCHES BELOW GRADE WITH YELLOW WARNING TAPE ABOVE MINIMUM 30 INCHES BELOW GRADE. USE 1-½" CONDUIT ON PORTIONS ABOVE GROUND TO BURIAL DEPTH IN GROUND. INSTALL ACCORDING TO MANUFACTURER'S INSTRUCTIONS AND NFPA 70-96.

REF DWG NO.	DRAWING TITLE
91X-5900-X-00216	DRAWING INDEX
91X-5900-X-00217	LEGEND AND SYMBOLS
91X-5900-G-00141	UTILITY PLAN
91X-5900-G-00145	DETAILS - SHEET 3 OF 6
91X-5900-G-00207	DETAILS - SHEET 6 OF 6

REV NO	ISSUE OR REVISION PURPOSE - DESCRIPTION	A-E	FERMCO	DATE
0	CERTIFIED FOR CONSTRUCTION		NA	3/6/96

INITIALS AND DATE

UNITED STATES DEPARTMENT OF ENERGY
FERNALD ENVIRONMENTAL MANAGEMENT PROJECT

THIS DRAWING PREPARED BY
PARSONS
THE RALPH M. PARSONS CO. - PARSONS MAIN, INC. - ENGINEERING-SCIENCE, INC.
CINCINNATI, OHIO

PROJECT NAME
OU1 REMEDIATION SYSTEM DESIGN
SITE IMPROVEMENT

DRAWING TITLE
CIVIL
SITE PLAN/DEMOLITION PLAN

DRAWN BY	DATE	LEAD ENGINEER	DATE	CHECKED BY	DATE
R. ESPARZA	06/08/95		3/4/96	E. KUBRIN	01/02/96

PLANT/BLDG NO | FLOOR | SCALE 1" = 50' | CLASS

SUBMITTED FOR APPROVAL — A-E — DATE
FERMCO CRU APPROVAL NA — DATE

PREPARED UNDER PARSONS PROJECT ORDER NUMBER: WPRAP/P0145
DOE PROJECT NO | FEMP PROJECT NO: WBS 1.1.1.1.1.3.1 00-90701 | DRAWING INDEX CODE NO: 91X-5900-G-[redacted] | SHEET NO | REV NO

405

2038

~~905~~

2038

Civil Utility Plan

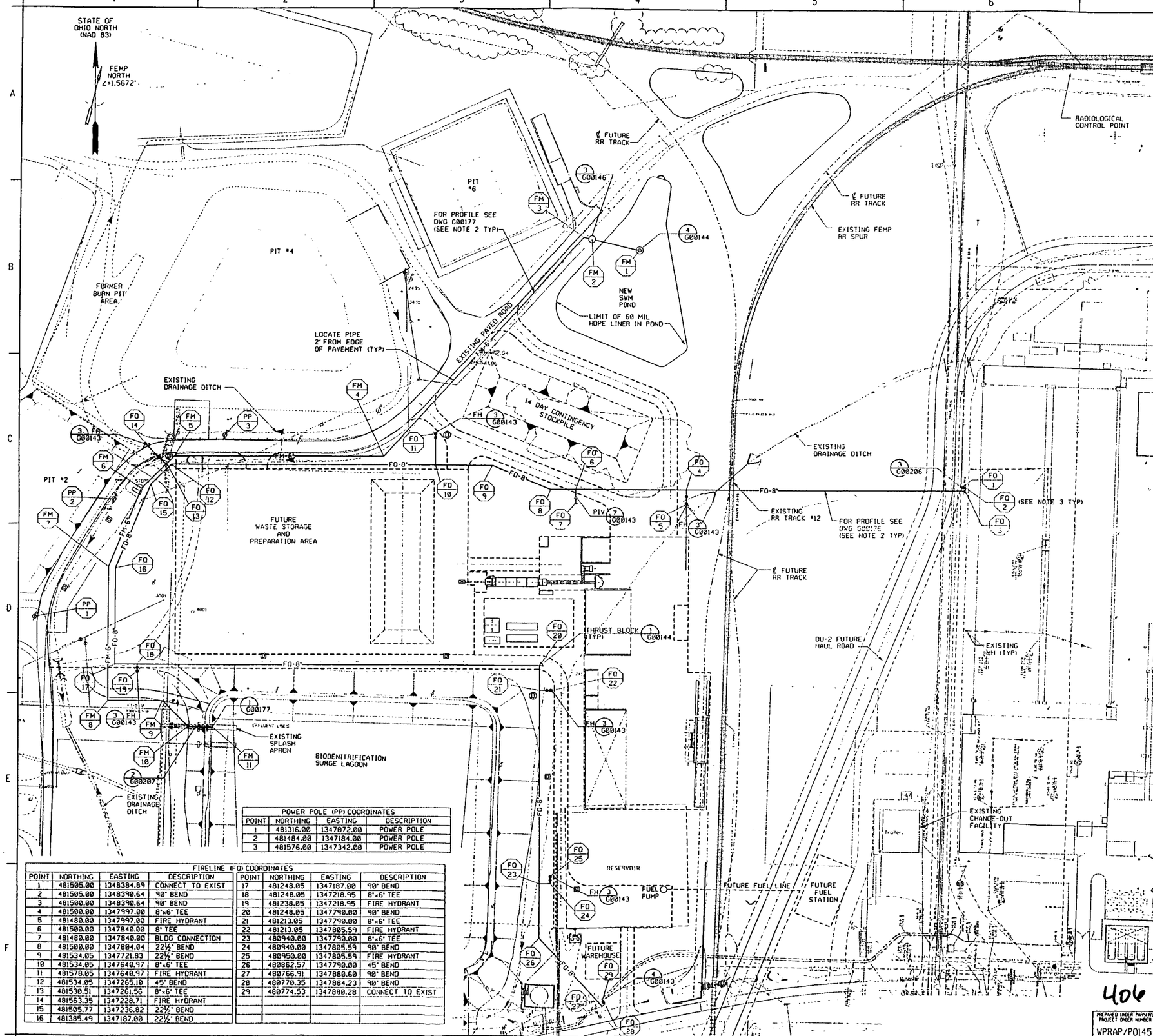

POWER POLE (PP) COORDINATES			
POINT	NORTHING	EASTING	DESCRIPTION
1	481316.00	1347072.00	POWER POLE
2	481484.00	1347184.00	POWER POLE
3	481576.00	1347342.00	POWER POLE

FIRELINE (FO) COORDINATES							
POINT	NORTHING	EASTING	DESCRIPTION	POINT	NORTHING	EASTING	DESCRIPTION
1	481505.00	1348384.89	CONNECT TO EXIST	17	481248.05	1347187.00	90° BEND
2	481505.00	1348390.64	90° BEND	18	481248.05	1347218.95	8"x6" TEE
3	481500.00	1348390.64	90° BEND	19	481238.05	1347218.95	FIRE HYDRANT
4	481500.00	1347997.00	8"x6" TEE	20	481248.05	1347790.00	90° BEND
5	481480.00	1347997.00	FIRE HYDRANT	21	481213.05	1347790.00	8"x6" TEE
6	481500.00	1347840.00	8" TEE	22	481213.05	1347805.59	FIRE HYDRANT
7	481480.00	1347840.00	BLDG CONNECTION	23	480940.00	1347790.00	8"x6" TEE
8	481500.00	1347804.04	22½° BEND	24	480940.00	1347805.59	90° BEND
9	481534.05	1347721.83	22½° BEND	25	480950.00	1347805.59	FIRE HYDRANT
10	481534.05	1347640.97	8"x6" TEE	26	480862.57	1347790.00	45° BEND
11	481578.05	1347640.97	FIRE HYDRANT	27	480766.91	1347880.60	90° BEND
12	481534.05	1347265.10	45° BEND	28	480770.35	1347884.23	90° BEND
13	481530.51	1347261.56	8"x6" TEE	29	480774.53	1347880.28	CONNECT TO EXIST
14	481563.35	1347228.71	FIRE HYDRANT				
15	481505.77	1347236.82	22½° BEND				
16	481385.49	1347187.00	22½° BEND				

NOTES

1. EXISTING CONDITIONS SHOWN ON THIS DRAWING WERE PREPARED FROM THE DOCUMENTS LISTED BELOW.

   EXISTING SITE DATA SOURCE (IN PLANT FILES)
   FEMP CONTRACTOR PROJECT DESIGN DOCUMENTS
   B.L. PAYNE AND ASSOCIATES TOPOGRAPHICAL SURVEY, 1995
2. PIPING MATERIALS AND MINIMUM DEPTH OF COVER TO BE USED.
   FO - HDPE SDR11, 42" DEPTH
   FM - HDPE SDR11, 36" DEPTH
3. LOCATION AND ELEVATIONS OF EXISTING UNDERGROUND UTILITIES ARE APPROXIMATE. CONTRACTOR TO FIELD VERIFY PRIOR TO CONSTRUCTION.
4. SEE DRAWING 91X-5900-G-00135 SITE PLAN/DEMOLITION PLAN FOR LOCATION OF ITEMS TO BE REMOVED.
5. SEE DRAWING 91X-5900-G-00136 AND 91X-5900-G-00137 FOR STORM PIPES AND GRADING.

~~235~~

2038

FORCE MAIN (FM) COORDINATES			
POINT	NORTHING	EASTING	DESCRIPTION
1	481837.72	1347929.27	℄ INLET PIPE
2	481852.83	1347860.96	℄ PUMP STATION
3	481855.38	1347849.41	60° BEND
4	481546.05	1347567.07	45° BEND
5	481546.05	1347270.04	45° BEND
6	481499.34	1347223.33	22½° BEND
7	481387.49	1347177.00	22½° BEND
8	481196.85	1347177.00	90° BEND
9	481196.85	1347254.38	45° BEND
10	481160.65	1347290.57	45° BEND
11	481159.72	1347326.07	OUTLET PIPE

REF DWG NO.	DRAWING TITLE
91X-5900-X-00216	DRAWING INDEX
91X-5900-X-00217	LEGEND AND SYMBOLS
91X-5900-G-00135	SITE PLAN/DEMOLITION PLAN
91X-5900-G-00136	GRADING PLAN - SHEET 1 OF 2
91X-5900-G-00137	GRADING PLAN - SHEET 2 OF 2
91X-5900-G-00176	UTILITY PROFILES - FIREWATER LINE
91X-5900-G-00177	UTILITY PROFILE - FORCE MAIN
91X-5900-G-00143	DETAILS - SHEET 1 OF 6
91X-5900-G-00144	DETAILS - SHEET 2 OF 6

REV. NO.	ISSUE OR REVISION PURPOSE - DESCRIPTION	A-E	FERNCO	DATE
0	CERTIFIED FOR CONSTRUCTION		NA	7/1/96

INITIALS AND DATE

UNITED STATES DEPARTMENT OF ENERGY
FERNALD ENVIRONMENTAL MANAGEMENT PROJECT

THIS DRAWING PREPARED BY
PARSONS
THE RALPH M. PARSONS CO. - PARSONS MAIN, INC. - ENGINEERING-SCIENCE, INC.
CINCINNATI, OHIO

PROJECT NAME
OU1 REMEDIATION SYSTEM DESIGN
SITE IMPROVEMENT

DRAWING TITLE
CIVIL
UTILITY PLAN

DRAWN BY	DATE	LEAD ENGINEER	DATE	CHECKED BY	DATE
J. TANG	08/08/95		7/1/96	E. KUBAIN	1/1/96

PLANT/BLDG NO | FLOOR | SCALE 1" = 50' | CLASS

SUBMITTED FOR APPROVAL | FERNCO CRU APPROVAL NA | DATE

406

PREPARED UNDER PARSONS PROJECT ORDER NUMBER WPRAP/P0145

DOE PROJECT NO	FEMP PROJECT NO	DRAWING INDEX CODE NO	SHEET NO	REV. NO
	WBS 1.1.1.1.1.3.1 00-90701	91X-5900-G-00141	G0002	0

[redacted]

~~2035~~

2038

Civil Grading Plan

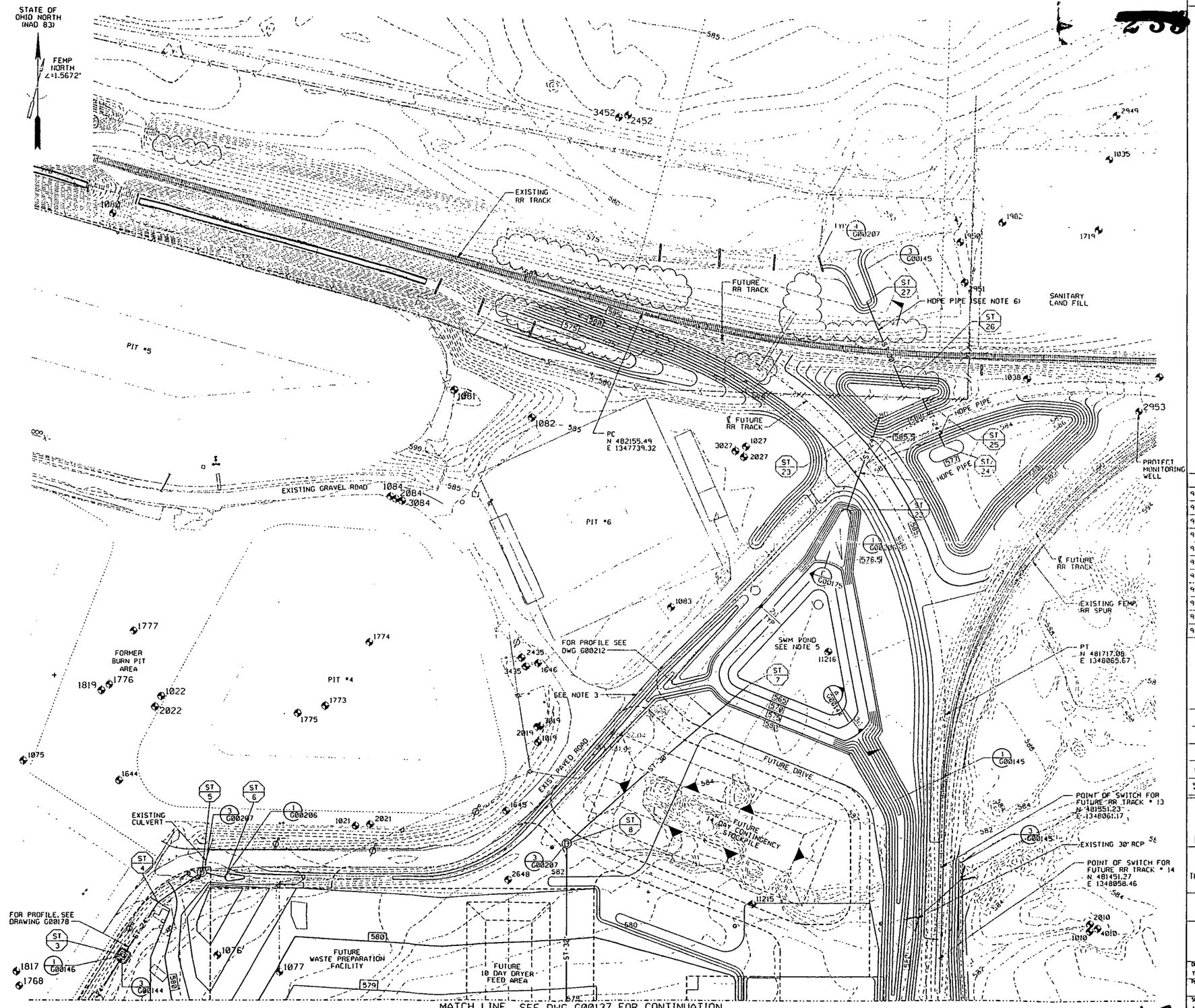

NOTES

1. EXISTING CONDITIONS SHOWN ON THIS DRAWING WERE PREPARED FROM THE DOCUMENTS LISTED BELOW.

   EXISTING SITE DATA SOURCE (IN PLANT FILES)
   FEMP CONTRACTOR PROJECT DESIGN DOCUMENTS
   D.L. PAYNE AND ASSOCIATES TOPOGRAPHICAL SURVEY, 1995

2. FUTURE RAILROAD (RR) TRACK ALIGNMENT SHOWN FOR GRADING ONLY, NOT TRACK CONSTRUCTION.
3. NEW GRADE TO MATCH EXISTING EDGE OF PAVEMENT.
4. CONTRACTOR SHALL FIELD VERIFY EXISTING ELEVATIONS SHOWN. ANY CONFLICTS WHICH COULD CAUSE A CHANGE IN THE PLANS SHALL BE IMMEDIATELY BROUGHT TO THE ATTENTION OF THE FERMCO CONSTRUCTION MANAGER.
5. SWM POND IS TO BE USED AS A SEDIMENT BASIN DURING CONSTRUCTION. CONTRACTOR IS TO REMOVE ALL SEDIMENT TO PROPOSED CONTOURS PRIOR TO LINER PLACEMENT. NEAR END OF CONSTRUCTION AREA IS GRADED AND SEEDED. SEDIMENT IS TO BE REMOVED TO A LOCATION DESIGNATED BY FERMCO.
6. ALL CULVERTS PIPE MATERIAL SHALL BE CORRUGATED EXTERIOR, SMOOTH INTERIOR HDPE SIMILAR TO HANCAR HI-O SURE LOCK. REMOVE SECTION OF RAILROAD TRACK FOR CONSTRUCTION OF ST-30.
7. SLOPES ARE 3H:1V UNLESS NOTED OTHERWISE.

2038

CENTER LINE FUTURE RR TRACK CURVE DATA	
DELTA	76.45°
RADIUS	441.68'
LENGTH	589.24'

STORM SEWER (ST) COORDINATES				
POINT	NORTHING	EASTING	DESCRIPTION	INVERT
3	481454.43	1347177.11	CATCH BASIN	
4	481512.71	1347214.65	22 1/2° BEND	
5	481545.48	1347262.39	MANHOLE	
6	481540.05	1347288.25	HEADWALL	
7	481748.71	1347853.77	END 30" PIPE	
8	481577.05	1347657.18	MANHOLE	
22	481941.65	1347959.57	HEADWALL	576.00
23	482042.32	1347994.87	END 24" PIPE	575.60
24	482010.38	1348064.59	BEGIN 24" PIPE	576.00
25	482062.76	1348040.88	END 24" PIPE	575.60
26	482074.35	1348020.62	BEGIN 30" PIPE	575.40
27	482167.34	1347980.01	END 30" PIPE	575.20

REF DWG NO.	DRAWING TITLE
91X-5900-X-00216	DRAWING INDEX
91X-5900-X-00217	LEGEND AND SYMBOLS
91X-5900-G-00137	GRADING PLAN - SHEET 2 OF 2
91X-5900-G-00144	DETAILS - SHEET 2 OF 6
91X-5900-G-00145	DETAILS - SHEET 3 OF 6
91X-5900-G-00146	DETAILS - SHEET 4 OF 6
91X-5900-G-00206	DETAILS - SHEET 5 OF 6
91X-5900-G-00207	DETAILS - SHEET 6 OF 6
91X05900-G-00175	GRADING SECTIONS
91X-5900-G-00212	UTILITY PROFILES - STORM SEWER
91X-5900-G-00178	UTILITY PROFILES - CULVERTS

REV NO	ISSUE OR REVISION PURPOSE - DESCRIPTION	A/E	FERMCO	DATE
0	APPROVED FOR CONSTRUCTION		NA	1/2/96

INITIALS AND DATE

UNITED STATES DEPARTMENT OF ENERGY
FERNALD ENVIRONMENTAL MANAGEMENT PROJECT

THIS DRAWING PREPARED BY
PARSONS
THE RALPH M. PARSONS CO. - PARSONS MAIN, INC. - ENGINEERING-SCIENCE, INC.
CINCINNATI, OHIO

PROJECT NAME
OU1 REMEDIATION SYSTEM DESIGN
SITE IMPROVEMENT

DRAWING TITLE
CIVIL
GRADING PLAN
SHEET 1 OF 2

DRAWN BY	DATE	LEAD ENGINEER	DATE	CHECKED BY	DATE
Y. AFSHAR	1-28-95		1/2/96	K. GERARD	01/04/96

PLANT/BLDG NO | FLOOR | SCALE 1"=40' | QLASS

SUBMITTED FOR APPROVAL | FERMCO CRU APPROVAL NA

A/E DATE | DATE

DOE PROJECT NO	FEMP PROJECT NO	DRAWING INDEX CODE NO.	SHEET NO	REV NO
	WBS 1.1.1.1.1.3.1 00-90701	91X-5900-G-00136	G0003	0

PREPARED UNDER PARSONS PROJECT ORDER NUMBER
WPRAP/P0145

407

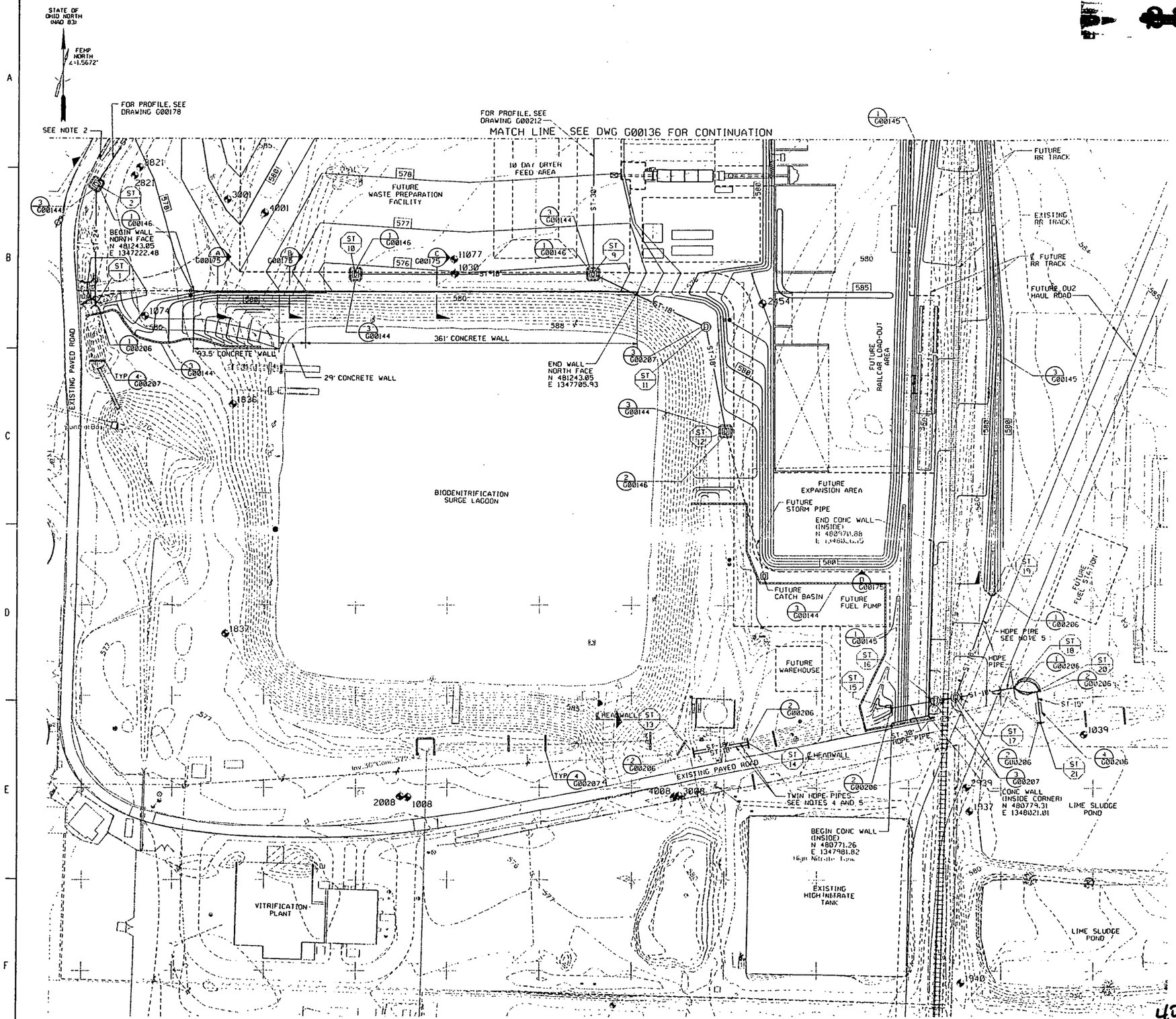

NOTES

1. EXISTING CONDITIONS SHOWN ON THIS DRAWING WERE PREPARED FROM THE DOCUMENTS LISTED BELOW.

   EXISTING SITE DATA SOURCE (IN PLANT FILES)
   FEMP CONTRACTOR PROJECT DESIGN DOCUMENTS
   B.L. PAYNE AND ASSOCIATES TOPOGRAPHICAL SURVEY, 1995

2. NEW GRADE TO MATCH EXISTING EDGE OF PAVEMENT.

3. CONTRACTOR SHALL FIELD VERIFY EXISTING ELEVATIONS SHOWN. ANY CONFLICTS WHICH COULD CAUSE A CHANGE IN THE PLANS SHALL BE IMMEDIATELY BROUGHT TO THE ATTENTION OF THE FERMCO CONSTRUCTION MANAGER.

4. REMOVE EXISTING 12 INCH PIPE AND INSTALL TWIN 18 INCH HDPE PIPES AT THE SAME EXISTING INVERT ELEVATION. SEE UTILITY PLAN FOR EXISTING UTILITIES.

5. NEW ST-18' CROSSES EXISTING OW-4", FO1-8", AND ELECTRIC DUCT BANK. PRIOR TO ANY FABRICATION OR INSTALLATION OF ANY STORM DRAIN, SUBCONTRACTOR SHALL FIELD DETERMINE ACTUAL LOCATION AND ELEVATION OF EACH UTILITY AND DETERMINE IF THERE ARE ANY CONFLICTS. ANY CONFLICTS SHALL BE IMMEDIATELY BROUGHT TO THE ATTENTION OF THE FERMCO CONSTRUCTION MANAGER IN WRITING FOR RESOLUTION.

2038

STORM SEWER (ST) COORDINATES				
POINT	NORTHING	EASTING	DESCRIPTION	INVERT
1	481227.05	1347114.04	HEADWALL	
2	481357.06	1347114.05	CATCH BASIN	
9	481261.05	1347657.18	CATCH BASIN	
10	481261.05	1347398.43	CATCH BASIN	
11	481205.67	1347780.59	MANHOLE	
12	481091.07	1347801.59	INLET BASIN	
13	480737.98	1347767.26	HEADWALL	573.06
14	480748.72	1347826.30	HEADWALL	573.14
15	480787.27	1347980.63	HEADWALL	573.65
16	480795.40	1348028.92	MANHOLE	577.50 (T) 573.90 (E) 573.80 (W)
17	480799.86	1348050.62	MANHOLE	577.50 (T) 574.10 (N) 574.10 (E) 574.00 (W)
18	480810.02	1348115.69	HEADWALL	574.50
19	480912.42	1348090.13	HEADWALL	575.80
20	480805.75	1348138.76	HEADWALL	574.80
21	480771.00	1348142.90	HEADWALL	575.00

(T) = TOP OF CATCH BASIN OR MANHOLE

REF DWG NO.	DRAWING TITLE
91X-5900-X-00216	DRAWING INDEX
91X-5900-X-00217	LEGEND AND SYMBOLS
91X-5900-G-00136	GRADING PLAN - SHEET 1 OF 2
91X-5900-G-00144	DETAILS - SHEET 2 OF 6
91X-5900-G-00145	DETAILS - SHEET 3 OF 6
91X-5900-G-00146	DETAILS - SHEET 4 OF 6
91X-5900-G-00206	DETAILS - SHEET 5 OF 6
91X-5900-G-00207	DETAILS - SHEET 6 OF 6
91X-5900-G-00175	GRADING SECTIONS
91X-5900-G-00178	UTILITY PROFILES - CULVERTS
91X-5900-G-00212	UTILITY PROFILES - STORM SEWER

REV. NO.	ISSUE OR REVISION PURPOSE - DESCRIPTION	A E	FERMCO	DATE
0	CERTIFIED FOR CONSTRUCTION		NA	2/14/96

INITIALS AND DATE

UNITED STATES DEPARTMENT OF ENERGY
FERNALD ENVIRONMENTAL MANAGEMENT PROJECT

THIS DRAWING PREPARED BY
PARSONS
THE RALPH M. PARSONS CO. - PARSONS MAIN, INC. - ENGINEERING-SCIENCE, INC.
CINCINNATI, OHIO

PROJECT NAME
OU1 REMEDIATION SYSTEM DESIGN
SITE IMPROVEMENT

DRAWING TITLE
CIVIL
GRADING PLAN
SHEET 2 OF 2

DRAWN BY	DATE	LEAD ENGINEER	DATE	CHECKED BY	DATE
Y. AFSHAR	9-1-95		2/14/96	K. GERARD	01/05/96

PLANT/BLDG NO	FLOOR	SCALE	CLASS
		1"=40'	

SUBMITTED FOR APPROVAL: A.E. DATE
FERMCO CRU APPROVAL: NA DATE

DOE PROJECT NO.	FEMP PROJECT NO	DRAWING INDEX CODE NO	SHEET NO	REV NO
	WBS 1.1.1.1.1.3.1 00-90701	91X-5900-G-00137	G0004	0

PREPARED UNDER PARSONS PROJECT ORDER NUMBER
WPRAP/P0145

408

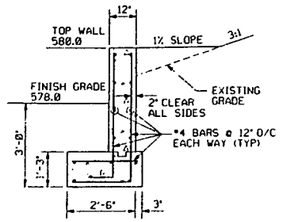

SECTION A REF G00175 G00137
SCALE: 1"=2'

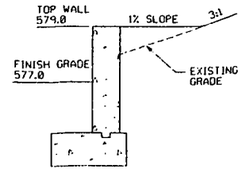

NOTE:
FOR WALL DIMENSIONS AND REINFORCING SEE SECTION A

SECTION B REF G00175 G00137
SCALE: 1"=2'

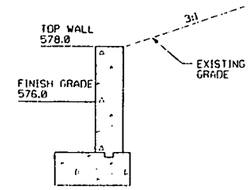

NOTE:
FOR WALL DIMENSIONS AND REINFORCING SEE SECTION A

SECTION C REF G00175 G00137
SCALE: 1"=2'

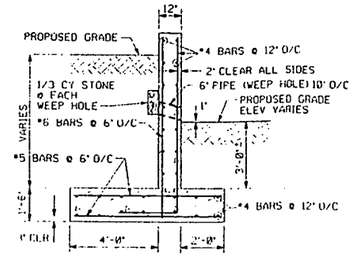

DETAIL 1
NTS

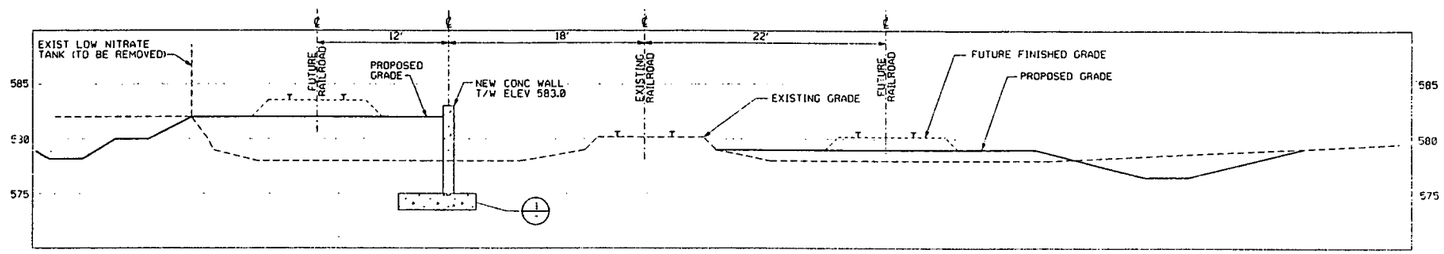

SECTION D REF G00175 G00137
SCALE: 1"=5'

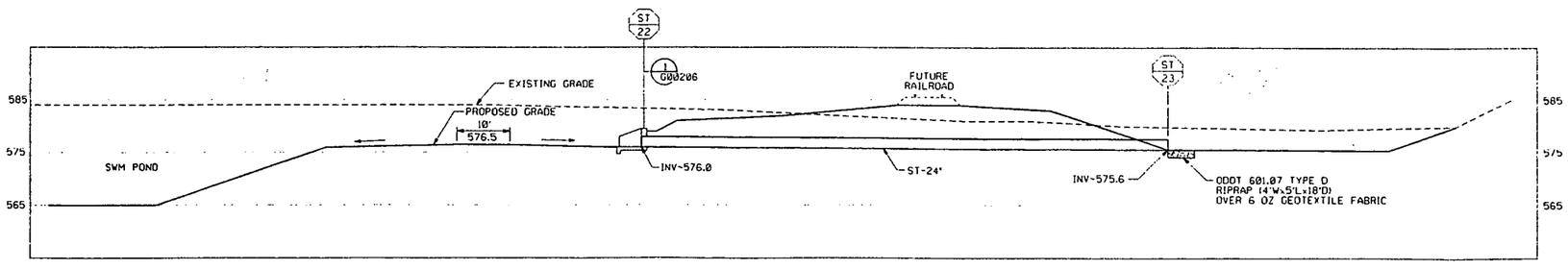

SECTION E REF G00175 G00136
SCALE: 1"=10'

NOTES

~~0 05~~

2038

REF DWG NO.	DRAWING TITLE
91X-5900-X-00216	DRAWING INDEX
91X-5900-X-00217	LEGEND AND SYMBOLS
91X-5900-G-00136	GRADING PLAN - SHEET 1 OF 2
91X-5900-G-00137	GRADING PLAN - SHEET 2 OF 2
91X-5900-G-00206	DETAILS - SHEET 5 OF 6

REV NO	ISSUE OR REVISION PURPOSE - DESCRIPTION	A-E	FERMCO	DATE
0	CERTIFIED FOR CONSTRUCTION		NA	2/12/96

UNITED STATES DEPARTMENT OF ENERGY
FERNALD ENVIRONMENTAL MANAGEMENT PROJECT

THIS DRAWING PREPARED BY
PARSONS
THE RALPH M. PARSONS CO. - PARSONS MAIN, INC. - ENGINEERING-SCIENCE, INC.
CINCINNATI, OHIO

PROJECT NAME
OU1 REMEDIATION SYSTEM DESIGN
SITE IMPROVEMENT

DRAWING TITLE
CIVIL
GRADING SECTIONS

DRAWN BY	DATE	LEAD ENGINEER	DATE	CHECKED BY	DATE
R. LINDGREN	12/22/95	[illegible]	2/6/96	K. GERARD	01/05/96

PLANT/BLDG NO	FLOOR	SCALE	CLASS
		AS SHOWN	

SUBMITTED FOR APPROVAL	FERMCO CRU APPROVAL
A-E DATE	DATE
NA	

409

PREPARED UNDER PARSONS PROJECT ORDER NUMBER	DOE PROJECT NO	TEMP PROJECT NO	DRAWING REF CODE NO	SHEET NO	REV NO
WPRAP/P0145		WBS 1.1.1.1.1.3.1 00-90701	91X-5900-G-00175	G0005	0

[redacted]

~~2037~~

2038

Civil Utility Profiles
and Civil Details

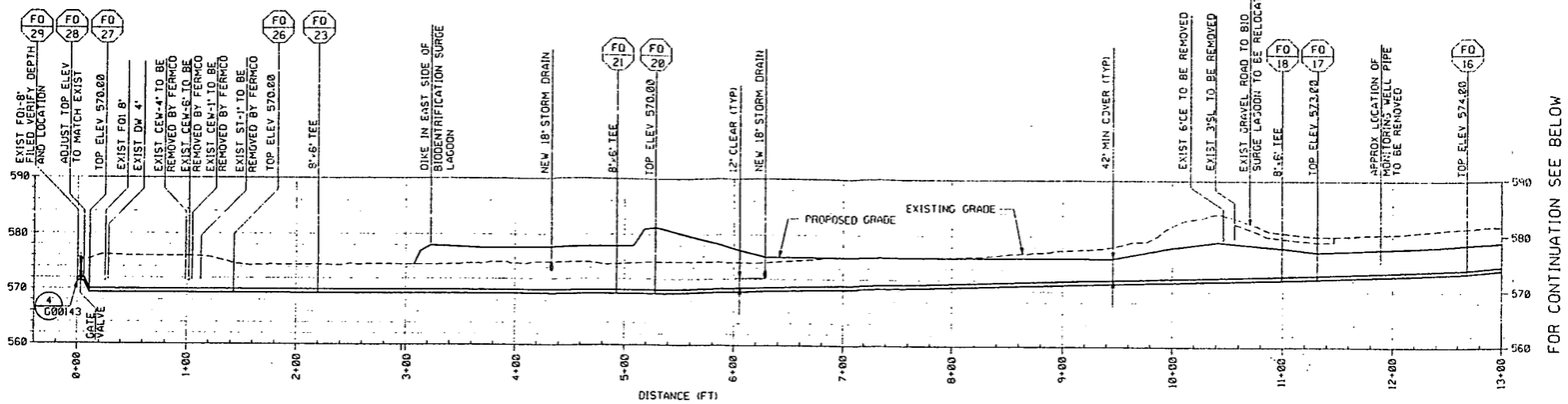

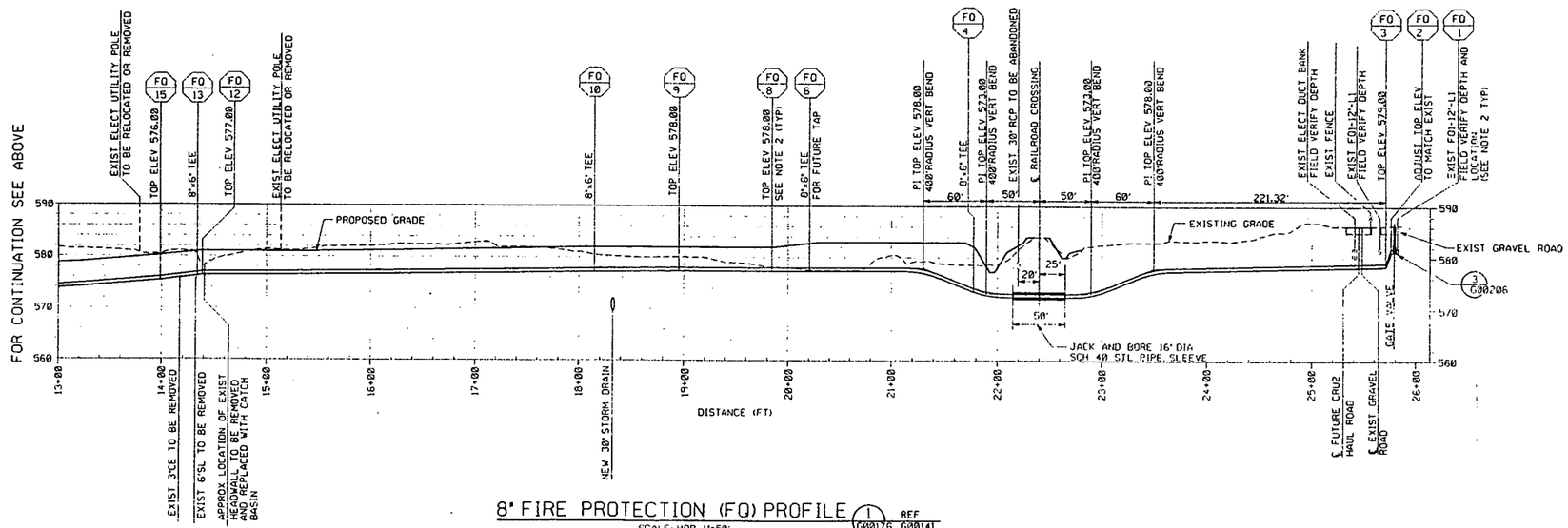

8" FIRE PROTECTION (FO) PROFILE

1 REF G00176 G00141

SCALE: HOR 1"=50'
VER 1"=10'

NOTES

1. LOCATION AND ELEVATIONS OF EXISTING UNDERGROUND UTILITIES ARE APPROXIMATE. CONTRACTOR TO FIELD VERIFY PRIOR TO CONSTRUCTION.
2. ALL BENDS AND FITTING ON HDPE PIPE ARE TO BE MOLDED UNLESS NOTED.

[redacted] 825

2038

REF DWG NO.	DRAWING TITLE
91X-5900-X-00216	DRAWING INDEX
91X-5900-Y-00217	LEGEND AND SYMBOLS
91X-5900-G-00141	UTILITY PLAN
91X-5900-G-00143	DETAILS - SHEET 1 OF 6
91X-5900-G-00206	DETAILS - SHEET 5 OF 6

REV NO	REVISION MARKER - DESCRIPTION	A.E.	FERMCO	DATE
0	CERTIFIED FOR CONSTRUCTION		NA	1/1/96

UNITED STATES DEPARTMENT OF ENERGY
FERNALD ENVIRONMENTAL MANAGEMENT PROJECT

THIS DRAWING PREPARED BY
PARSONS
THE RALPH M. PARSONS CO. - PARSONS MAIN, INC. - ENGINEERING-SCIENCE, INC.
CINCINNATI, OHIO

PROJECT NAME
OU1 REMEDIATION SYSTEM DESIGN
SITE IMPROVEMENT

DRAWING TITLE
CIVIL
UTILITY PROFILE
FIRE PROTECTION LINE

DRAWN BY	DATE	LEAD ENGINEER	DATE	CHECKED BY	DATE
E. TOMONGIN	11-28-95	[illegible]	1/1/96	E. AUBRIN	01/18/96

PERMIT/DOC NO	FOLDER	SCALE	CLASS
		1" = 50'	

SUBMITTED FOR APPROVAL	FERMCO CRU APPROVAL
[illegible] 1/1/96	NA

410

PREPARED UNDER PARENT PROJECT ORDER NUMBER	DOE PROJECT NO	TEMP PROJECT NO	DRAWING INDEX CODE NO	SHEET NO	REV NO
WPRAP/P0145		WBS 1.1.1.1.1.3.1 00-90701	91X-5900-G-00176	G0006	0

[redacted]

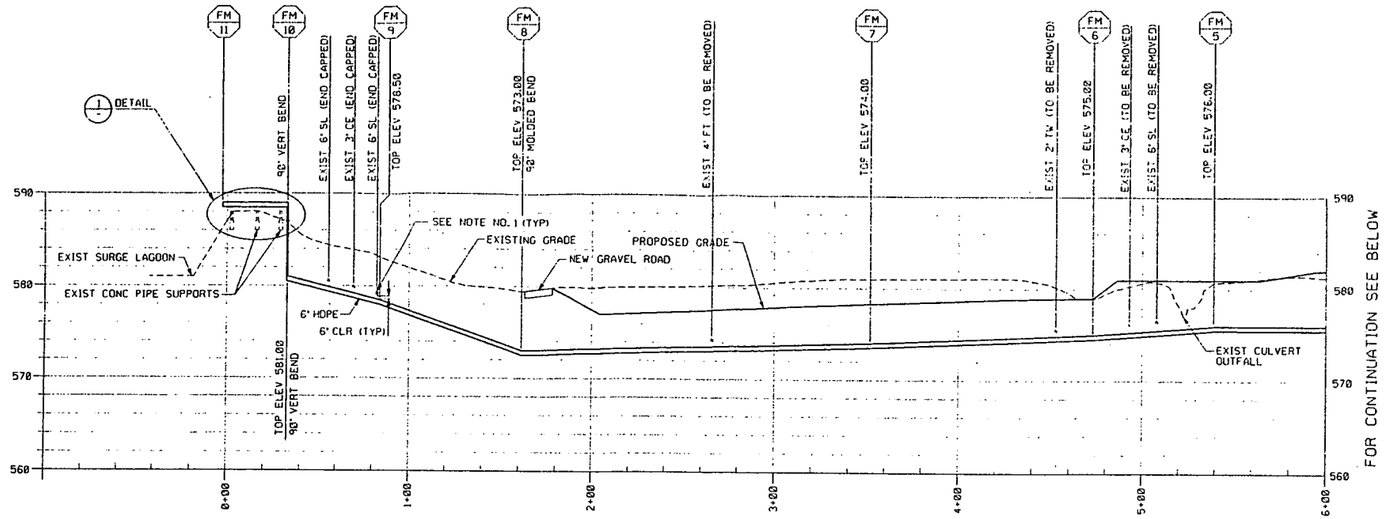

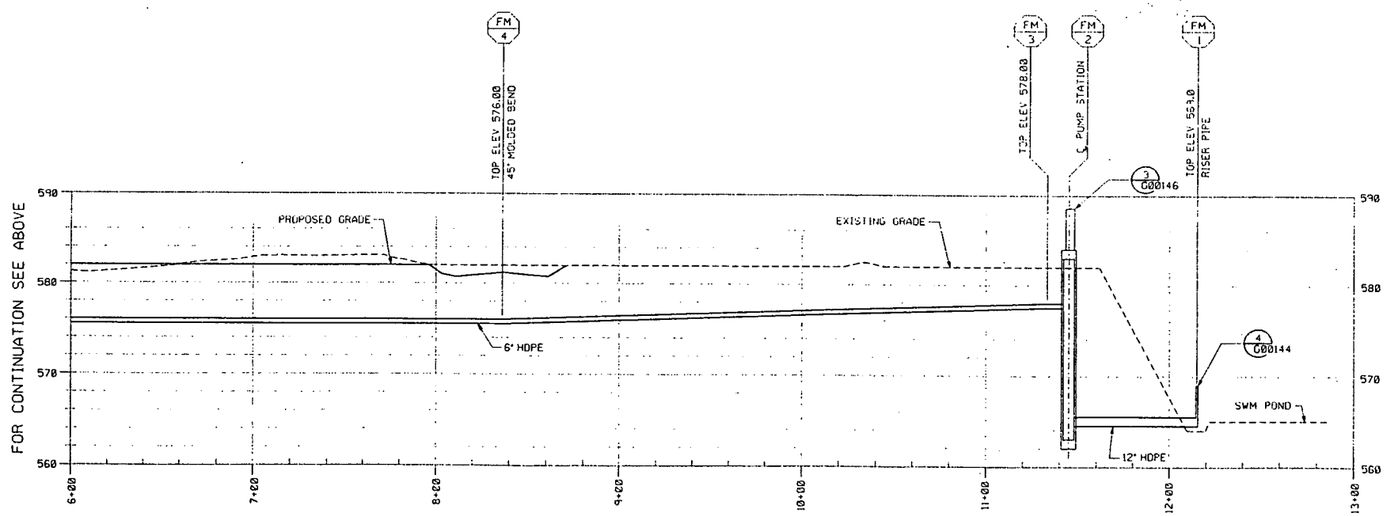

FORCE MAIN (FM) PROFILE (A/-) REF G00177 G00141
SCALE: 1"=30'

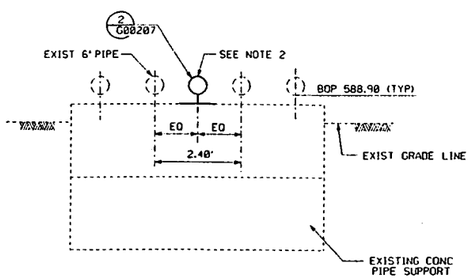

SECTION (A/-)
NTS

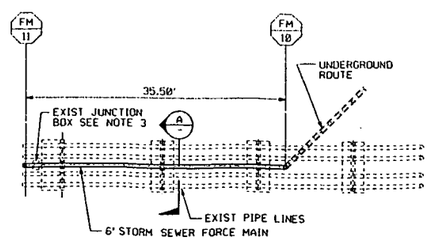

PLAN

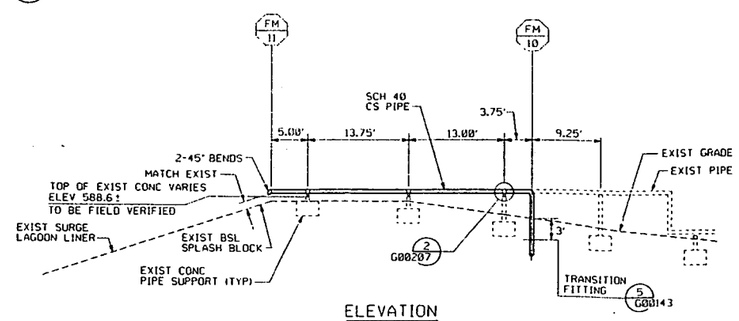

ELEVATION

DETAIL (1/-)
NTS

411

NOTES

1. THE DEPTH AND LOCATION OF THE EXISTING UTILITY LINE CROSSING THE NEW FORCE MAIN IS APPROXIMATE. FIELD VERIFY ITS LOCATION AND DEPTH AND ADJUST THE DEPTH OF THE NEW FORCE MAIN TO CLEAR THE EXISTING LINE.
2. HEAT TRACE FORCE MAIN ABOVE GROUND AND DOWN TO 3 FEET BELOW GRADE. USE 3-1/C #12 AWG WIRE, 600 V, THWN THRU 1½" WATERTIGHT FLEX STEEL CONDUIT WITH FITTINGS. SPLICE TO EXISTING SERVICE IN JUNCTION BOX NEAR FM 11, MARKED '240 V'. RELOCATE EXISTING JUNCTION BOX TO NOT INTERFERE WITH NEW PIPE. USE 9 WATTS/ FT SELF REGULATING HEAT TRACE CABLE WITH NEMA 4X, SINGLE POLE DOUBLE THROW THERMOSTAT, RATED FOR 240 V, 10 AMPS MINIMUM. USE PILOT LIGHT CONNECTION KIT. INSTALL ACCORDING TO MANUFACTURER'S INSTRUCTIONS AND NFPA 70-96.

2038

REF DWG NO.	DRAWING TITLE
91X-5900-X-00216	DRAWING INDEX
91X-5900-X-00217	LEGEND AND SYMBOLS
91X-5900-G-00141	UTILITY PLAN
91X-5900-G-00143	DETAILS - SHEET 1 OF 6
91X-5900-G-00144	DETAILS - SHEET 2 OF 6
91X-5900-G-00146	DETAILS - SHEET 4 OF 6
91X-5900-G-00207	DETAILS - SHEET 6 OF 6

REV NO.	REV OF REVISION PURPOSE - DESCRIPTION	A/E	REVIEWED	DATE
0	CERTIFIED FOR CONSTRUCTION		NA	7/15/96

UNITED STATES DEPARTMENT OF ENERGY
FERNALD ENVIRONMENTAL MANAGEMENT PROJECT

THIS DRAWING PREPARED BY
PARSONS
THE RALPH M. PARSONS CO. - PARSONS MAIN, INC. - ENGINEERING-SCIENCE, INC.
CINCINNATI, OHIO

PROJECT NAME
OU1 REMEDIATION SYSTEM DESIGN
SITE IMPROVEMENT

DRAWING TITLE
CIVIL
UTILITY PROFILE
FORCE MAIN

DRAWN BY	DATE	LEAD ENGINEER	DATE	CHECKED BY	DATE
C. TOMONGIN	11-28-95			E. KUBRIN	01/04/96
PLANT/BLDG NO.		FLOOR		SCALE: AS SHOWN	CLASS
SUBMITTED FOR APPROVAL		FERNCO CRU APPROVAL: NA			

PREPARED UNDER PARSONS PROJECT ORDER NUMBER	A/E DOE PROJECT NO.	TEMP PROJECT NO	DRAWING INDEX CODE NO	SHEET NO	REV NO
WPRAP/P0145		WBS 1.1.1.1.1.2.1 00-90701	91X-5900-G-00177	G0007	0

[redacted]

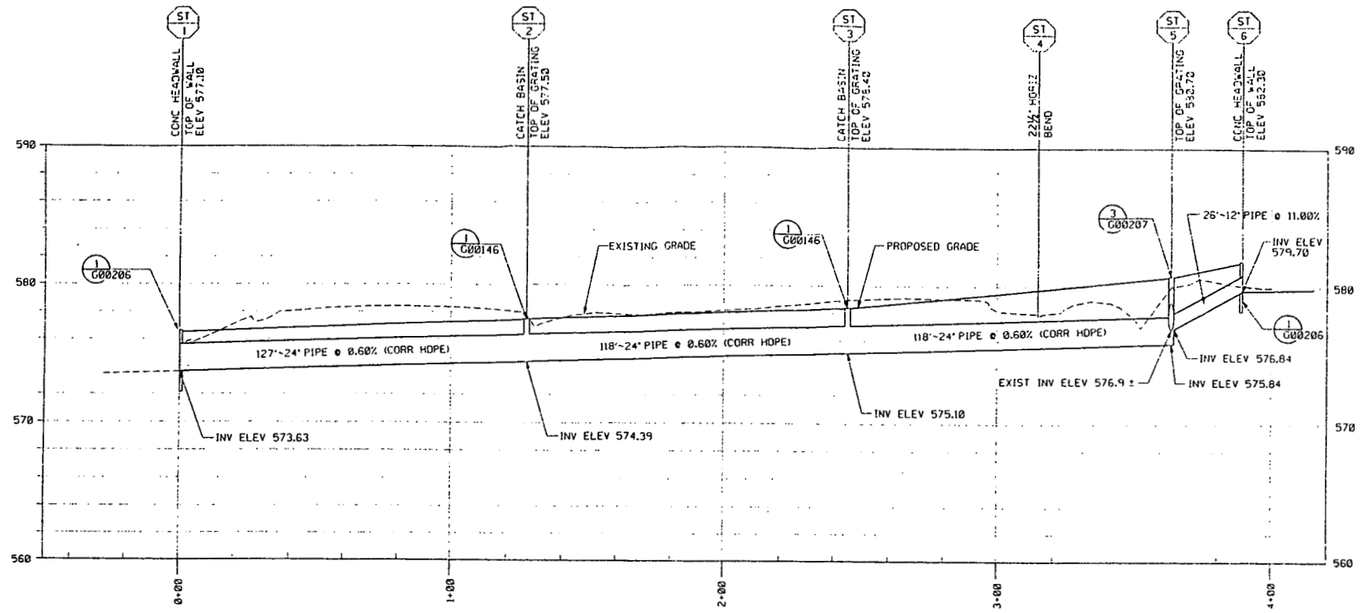

24" STORM SEWER (ST) PROFILE

SCALE: HOR 1"=20'
VER 1"=5'

1/C00178 REF C00136 C00137

NOTES

2038

REF DWG NO.	DRAWING TITLE
91X-5900-X-00216	DRAWING INDEX
91X-5900-X-00217	LEGEND AND SYMBOLS
91X-5900-G-00136	GRADING PLAN - SHEET 1 OF 2
91X-5900-G-00137	GRADING PLAN - SHEET 2 OF 2
91X-5900-G-00146	DETAILS - SHEET 4 OF 6
91X-5900-G-00206	DETAILS - SHEET 5 OF 6

REV NO	TYPE OF REVISION PURPOSE - DESCRIPTION	INITIALS AND DATE		
0	CERTIFIED FOR CONSTRUCTION		NA	4/24/96

UNITED STATES DEPARTMENT OF ENERGY
FERNALD ENVIRONMENTAL MANAGEMENT PROJECT

THIS DRAWING PREPARED BY
PARSONS
THE RALPH M. PARSONS CO. - PARSONS MAIN, INC. - ENGINEERING-SCIENCE, INC.
CINCINNATI, OHIO

PROJECT NAME
OU1 REMEDIATION SYSTEM DESIGN
SITE IMPROVEMENT

DRAWING TITLE
CIVIL
UTILITY PROFILE
CULVERTS

DRAWN BY	DATE	LEAD ENGINEER	DATE	CHECKED BY	DATE
D. FOX	11-20-95			J. GERARD	1-5-96

PLANT/BLDG NO | FLOOR | SCALE: AS SHOWN | QLASS

SUBMITTED FOR APPROVAL | FERMCO CRU APPROVAL: NA

412

PREPARED UNDER PARSONS PROJECT ORDER NUMBER	CCE PROJECT NO	FEMP PROJECT NO	DRAWING INDEX CODE NO	SHEET NO	REV NO
WPRAP/P0145		WBS 1.1.1.1.1.3.1 00-90701	91X-5900-G-00178	G0008	0

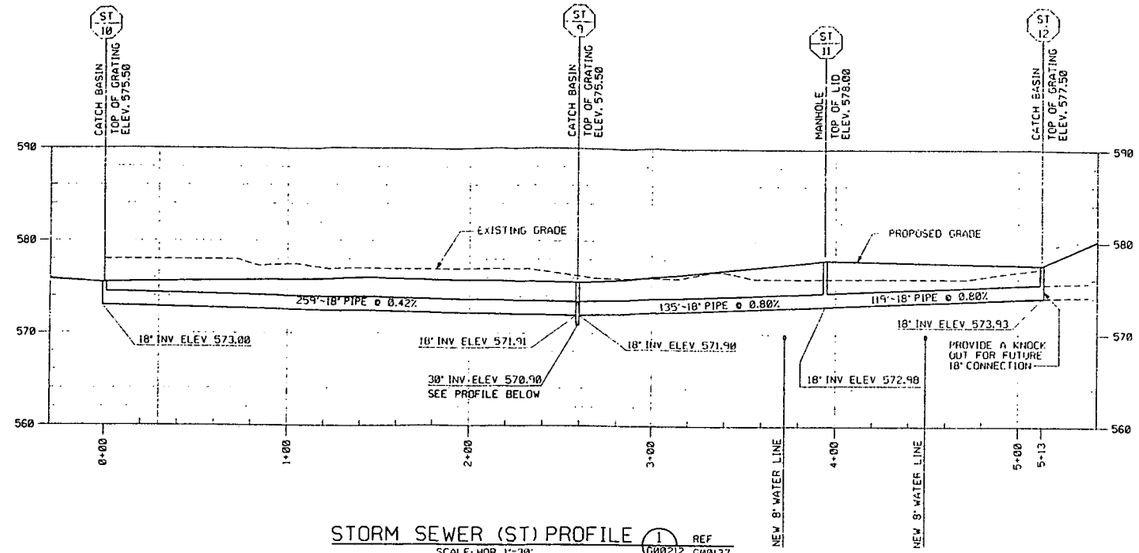

STORM SEWER (ST) PROFILE (1) REF G00212 G00137

SCALE: HOR 1"=30'
VER 1"=5'

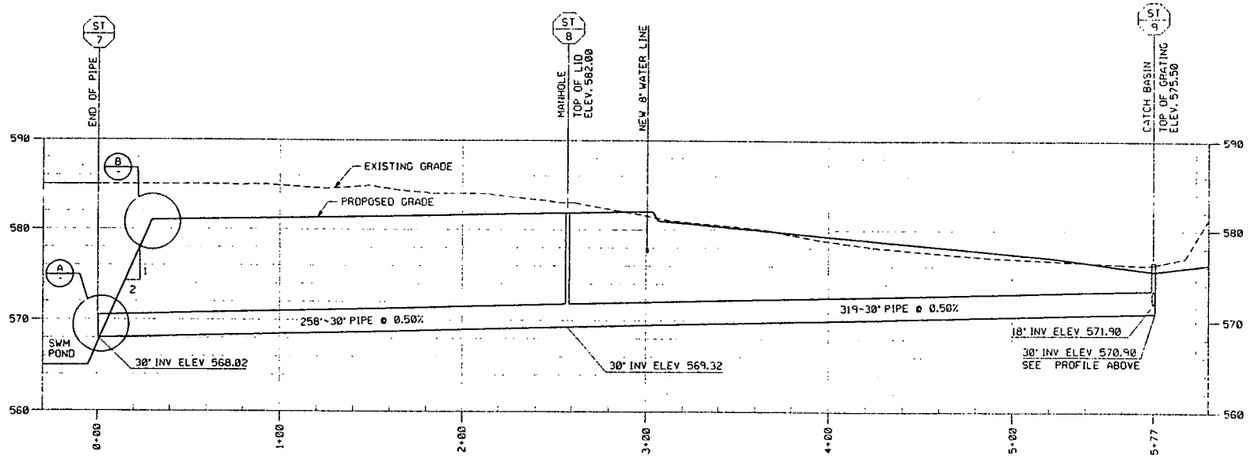

STORM SEWER (ST) PROFILE (2) REF G00212 G00136 G00137

SCALE: HOR 1"=30'
VER 1"=5'

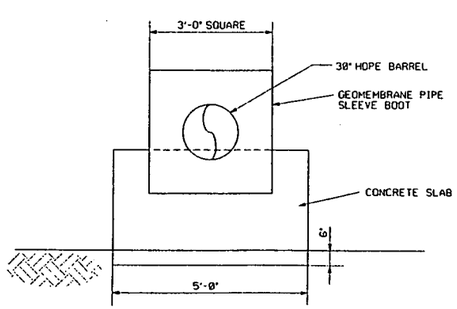

ELEVATION (3)
NTS

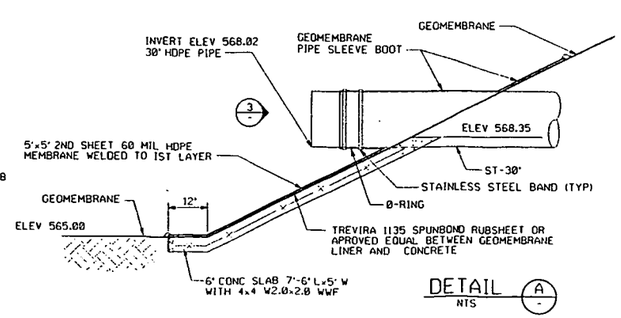

DETAIL (A)
NTS

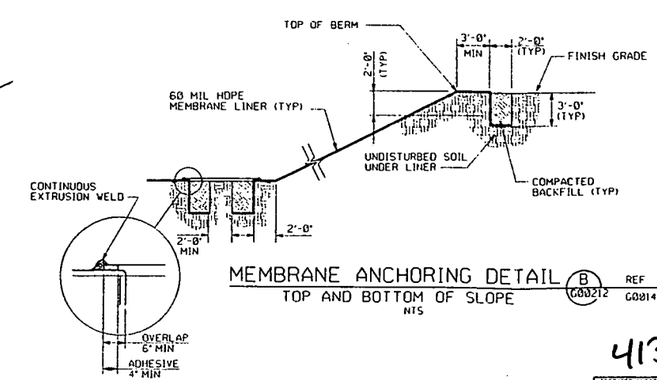

MEMBRANE ANCHORING DETAIL (B) REF G00212 G00144
TOP AND BOTTOM OF SLOPE
NTS

NOTES

1. CONCRETE SHALL BE ODOT CLASS F (3000 PSI) UNLESS OTHERWISE NOTED.

~~225~~

2038

REF DWG NO.	DRAWING TITLE
91X-5900-G-00216	DRAWING INDEX
91X-5900-G-00217	LEGEND AND SYMBOLS
91X-5900-G-00136	GRADING PLAN - SHEET 1 OF 2
91X-5900-G-00137	GRADING PLAN - SHEET 2 OF 2
91X-5900-G-00144	DETAILS - SHEET 2 OF 6

REV	ISSUE OR REVISION NUMBER - DESCRIPTION	A.E.	FERNALD	DATE
0	CERTIFIED FOR CONSTRUCTION		NA	7/9/96

INITIALS AND DATE

UNITED STATES DEPARTMENT OF ENERGY
FERNALD ENVIRONMENTAL MANAGEMENT PROJECT

THIS DRAWING PREPARED BY
PARSONS
THE RALPH M. PARSONS CO. - PARSONS MAIN, INC. - ENGINEERING-SCIENCE, INC.
CINCINNATI, OHIO

PROJECT NAME
OU1 REMEDIATION SYSTEM DESIGN
SITE IMPROVEMENT

DRAWING TITLE
CIVIL
UTILITY PROFILE
STORM SEWER

DRAWN BY	DATE	LEAD TRADER	DATE	CHECKED BY	DATE
C. TOMONGIN	11-28-95	[signature]	2/9/96	E. KUBARIN	12/18/96

PLANT/BLDG NO	FLOOR	SCALE	CLASS
		AS SHEET	

SUBMITTED FOR APPROVAL	FERNALD CRU APPROVAL
A.E. [signature] DATE 7/9/96	NA DATE

413

PREPARED UNDER PARSONS PROJECT ORDER NUMBER	DOE PROJECT NO	TEAM PROJECT NO	DRAWING AREA CODE NO	SHEET NO	REV NO
WPRAP/P0145		WBS 1.1.1.1.1.3.1 00-90701	91X-5900-G-00212	[redacted]	[redacted]

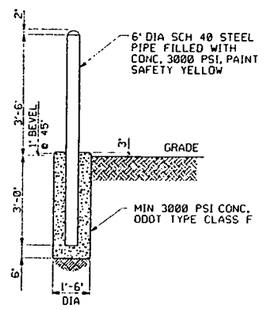

TYPICAL GUARD POST (1/-)
NTS

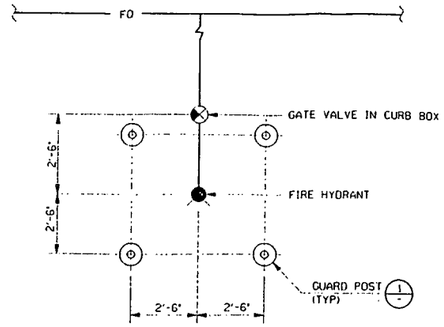

GUARD POST LOCATIONS (2/-)
NTS

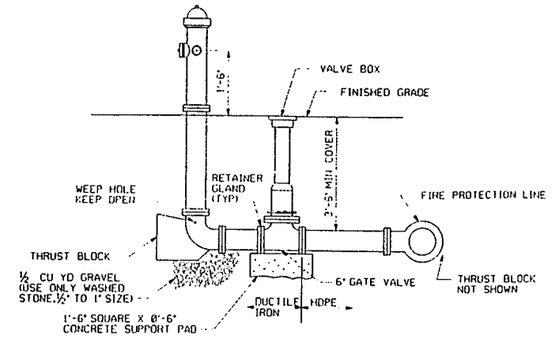

FIRE HYDRANT WITH GATE VALVE (3/-)
NTS
REF G00143 G00141

NOTE: FLANGE ADAPTOR'S SHALL BE USED AT ALL TRANSITIONS OF UNLIKE PIPING MATERIAL.

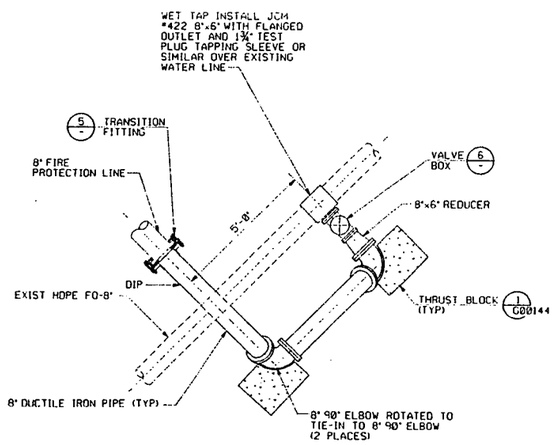

FIRE PROTECTION TIE-IN (4/-)
NTS
REF G00143 G00141 G00176

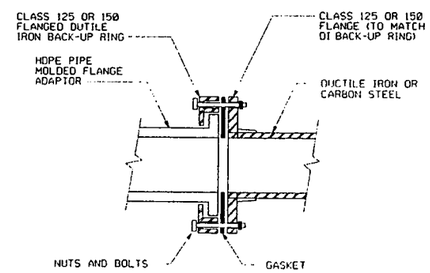

TRANSITION FITTING (5/-)
NTS
REF G00143 G00177 G00206

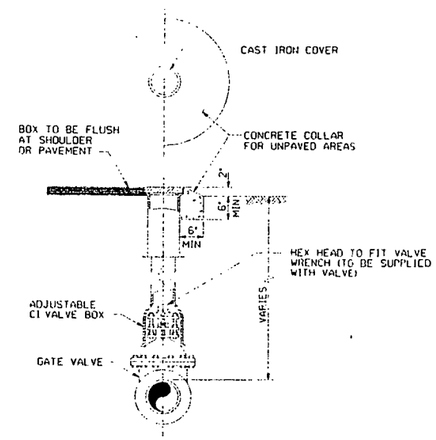

VALVE BOX (6/-)
NTS
REF G00143 G00141 G00206

NOTE: VALVE SIZE 12" MAXIMUM

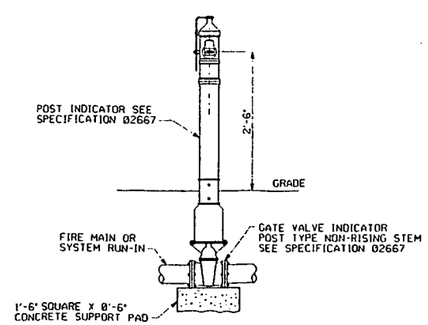

POST INDICATOR VALVE (7/-)
NTS
REF G00143 G00141

NOTES

1. UNLESS OTHERWISE NOTED ALL MATERIALS SHALL CONFORM TO THE STATE OF OHIO DEPARTMENT OF TRANSPORTATION (ODOT) CONSTRUCTION AND MATERIAL SPECIFICATIONS DATED JANUARY 1, 1995.

~~235~~

2038

REF DWG NO.	DRAWING TITLE
91X-5900-X-00216	DRAWING INDEX
91X-5900-X-00217	LEGEND AND SYMBOLS
91X-5900-G-00141	UTILITY PLAN
91X-5900-G-00176	UTILITY PROFILES - FIRE PROTECTION LINE
91X-5900-G-00177	UTILITY PROFILE - FORCE MAIN
91X-5900-G-00144	DETAILS - SHEET 2 OF 6
91X-5900-G-00206	DETAILS - SHEET 5 OF 6

REV NO	ISSUE OR REVISION PURPOSE - DESCRIPTION	A-E	FERMCO	DATE
0	CERTIFIED FOR CONSTRUCTION		NA	9/4/96

UNITED STATES DEPARTMENT OF ENERGY
FERNALD ENVIRONMENTAL MANAGEMENT PROJECT

THIS DRAWING PREPARED BY
PARSONS
THE RALPH M. PARSONS CO. · PARSONS MAIN, INC. · ENGINEERING-SCIENCE, INC.
CINCINNATI, OHIO

PROJECT NAME
OU1 REMEDIATION SYSTEM DESIGN
SITE IMPROVEMENT

DRAWING TITLE
CIVIL DETAILS
SHEET 1 OF 6

DRAWN BY	DATE	LEAD ENGINEER	DATE	CHECKED BY	DATE
R. ESPARZA	07/30/96			E. KUBRIN	01/05/96

PLANT/BLDG NO	FLOOR	SCALE	CLASS
		NONE	

SUBMITTED FOR APPROVAL	FERMCO CRU APPROVAL
	NA

414

DOE PROJECT NO	FEMP PROJECT NO	DRAWING INDEX CODE NO	SHEET NO	REV NO
	WBS 1.1.1.1.1.3.1 00-90701	91X-5900-G-00143	G0010	0

PREPARED UNDER PARSONS PROJECT ORDER NUMBER
WPRAP/P0145

TYPE	SIZE	½ BENDS A	½ BENDS B	⅛ BENDS A	⅛ BENDS B	1/16 BENDS A	1/16 BENDS B	TEES A	TEES B	PLUGS C	PLUGS D
2000 PSF SOIL	6"	16"	10"	9"	10"	6"	8"	10"	12"	10"	21"
	8"	22"	13"	12"	13"	8"	10"	13"	16"	12"	29"
	10"	26"	17"	14"	17"	10"	13"	16"	20"	14"	36"
	12"	29"	21"	16"	21"	11"	16"	18"	24"	16"	41"
	16"	38"	27"	-	-	-	-	24"	30"	-	-
	20"	42"	30"	-	-	-	-	27"	30"	-	-
	24"	48"	30"	-	-	-	-	36"	30"	-	-

NOTE: BASED ON 150 PSI STATIC PRESSURE PLUS A.W.W.A. WATER HAMMER. ALL BEARING SURFACES TO BE CARRIED TO UNDISTURBED GROUND.

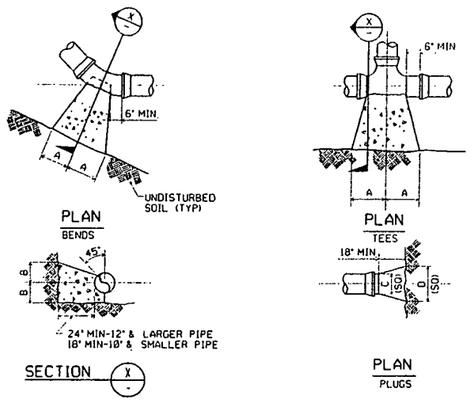

THRUST BLOCKS (1) REF G00144 G00141 G00143 G00206
NTS
SEE NOTE 2

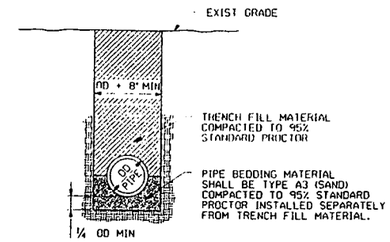

TYPICAL PIPE BEDDING (2) REF G00144 G00141
NTS

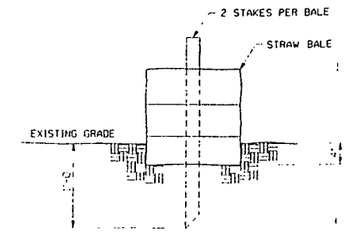

NOTE:
1. STRAW BALES TO BE USED WHEN NATURAL GROUND IS LEVEL OR SLOPING AWAY FROM PROJECT.
2. PLACE STRAW BALES APPROXIMATELY PARALLEL TO BOTTOM OF FILL SLOPE AND AROUND THE CATCH BASINS INLETS.
3. STRAW BALES SHALL BE STANDARD SIZE 18"x18"x48".
4. FOR EROSION CONTROL MAINTENANCE SEE SPECIFICATIONS.

STRAW BALE BARRIER (3) REF G00144 G00136 G00137
NTS

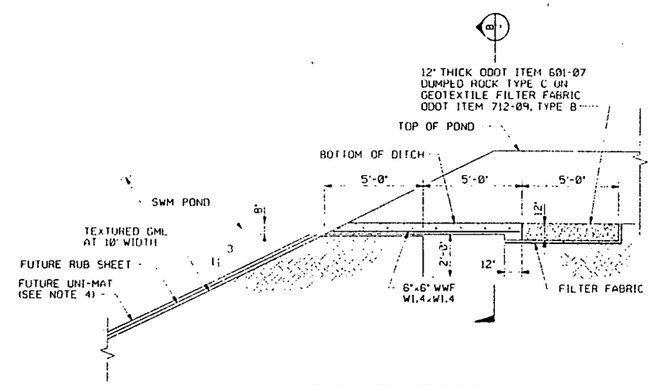

SWM POND INLET SECTION (A) REF G00144 G00136
NTS

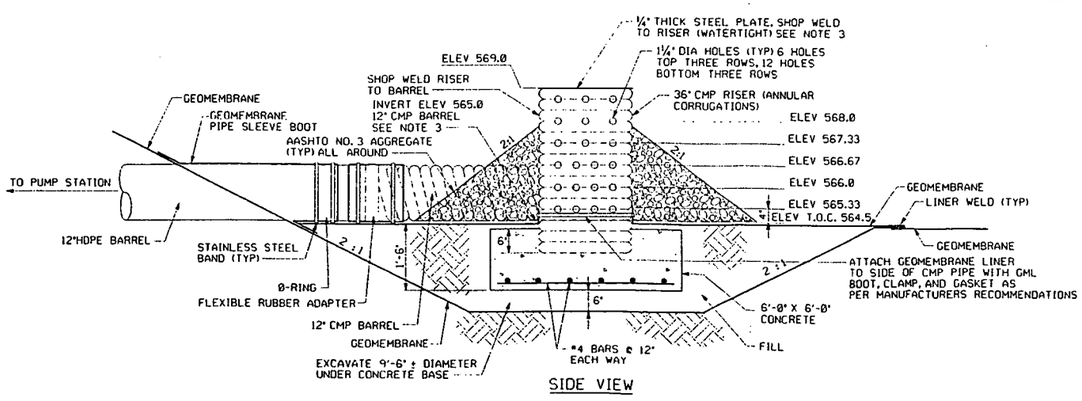

RISER PIPE (4) REF G00144 G00141 G00177
NTS

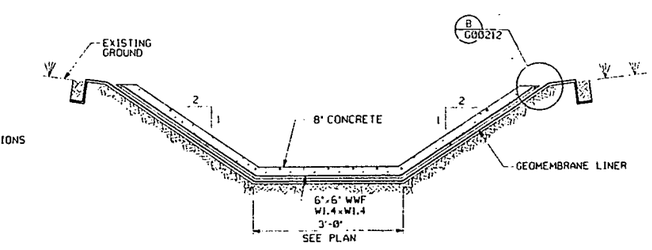

SECTION (B)
NTS

NOTES

1. UNLESS OTHERWISE NOTED ALL MATERIALS SHALL CONFORM TO THE STATE OF OHIO DEPARTMENT OF TRANSPORTATION (ODOT) CONSTRUCTION AND MATERIAL SPECIFICATIONS DATED JANUARY 1, 1996.
2. THRUST BLOCKS SHALL BE INSTALLED ON ALL ELBOW BENDS, TEES AND PLUGS ON UNDERGROUND PIPE 4 INCHES AND LARGER.
3. ALL STEEL PLATE AND CORREGATED METAL PIPE IS TO BE EPOXY COATED. ALL FIELD WELDS ARE TO RECEIVE EPOXY COATING AT COMPLETION.
4. UNI-MAT SHALL BE PROVIDED AT 3:1 SLOPE FOR ACCESS TO THE BOTTOM OF POND FOR CLEANING PURPOSES.

2038

REF DWG NO.	DRAWING TITLE
91X-5900-X-00216	DRAWING INDEX
91X-5900-X-00217	LEGEND AND SYMBOLS
91X-5900-G-00136	GRADING PLAN - SHEET 1 OF 2
91X-5900-G-00137	GRADING PLAN - SHEET 2 OF 2
91X-5900-G-00141	UTILITY PLAN
91X-5900-G-00177	UTILITY PROFILE - FORCE MAIN
91X-5900-G-00212	UTILITY PROFILES - STORM SEWER
91X-5900-G-00143	DETAILS - SHEET 1 OF 6

REV NO	CODE OF REVISION PURPOSE - DESCRIPTION	A-E	FERNCO	DATE
0	CERTIFIED FOR CONSTRUCTION		NA	4/96

ATTACH AND DATE

UNITED STATES DEPARTMENT OF ENERGY
FERNALD ENVIRONMENTAL MANAGEMENT PROJECT

THIS DRAWING PREPARED BY
PARSONS
THE RALPH M. PARSONS CO. - PARSONS MAIN, INC. - ENGINEERING-SCIENCE, INC.
CINCINNATI, OHIO

PROJECT NAME
OU1 REMEDIATION SYSTEM DESIGN
SITE IMPROVEMENT

DRAWING TITLE
CIVIL DETAILS
SHEET 2 OF 6

DRAWN BY	DATE	LEAD ENGINEER	DATE	CHECKED BY	DATE
R. ESPARZA	07/30/95		4/4/96	E. KUBRIN	01/05/96

PERMIT/ECN NO	FLOOR	SCALE	CLASS
		NONE	

SUBMITTED FOR APPROVAL	FERNCO CRU APPROVAL
A-E DATE	NA DATE

415

PREPARED UNDER PARSONS PROJECT ORDER NUMBER	DOE PROJECT NO.	TEMP PROJECT NO	DRAWING INDEX CODE NO.	SHEET NO	REV NO.
WPRAP/P0145		WBS 1.1.1.1.1.3.1 00-90701	91X-5900-G-00144	G0011	0

[redacted]

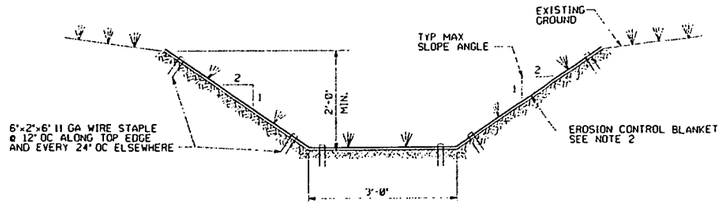

NOTE:
1. FOR DITCH INVERT ELEVATION SEE PLANS

TYPICAL SEEDED DITCH (1) REF G00145 G00136 G00137
NTS

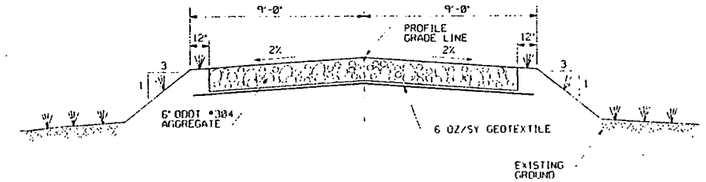

GRAVEL ROAD (2) REF G00145 G00135
NTS

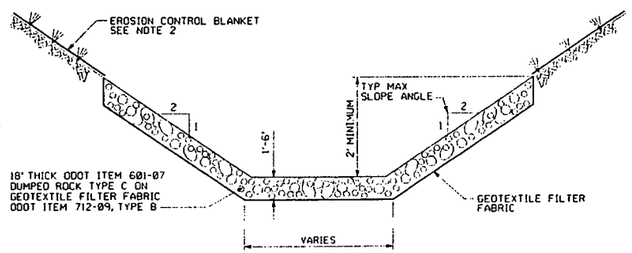

TYPICAL FLAT BOTTOM DITCH AND EMERGENCY DITCH (3) REF G00145 G00136 G00137
NTS

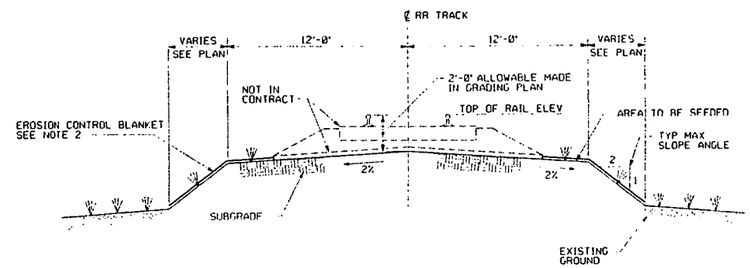

RAILROAD SECTION (TYP) (4) REF G00145 G00136 G00137
NTS

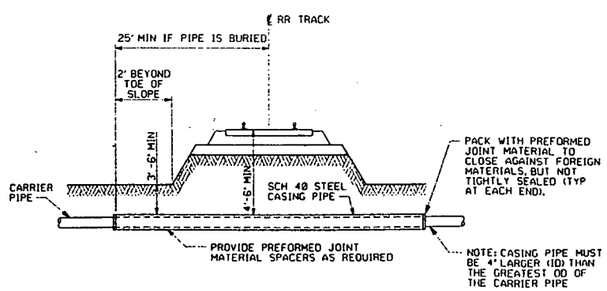

PIPELINES CROSSING UNDER RR TRACKS (TYP) (5) REF G00145 G00136
NTS

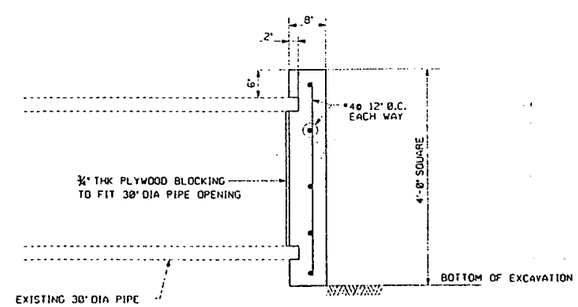

EXIST PIPE END SEAL (TYP) (6) REF G00145 G00135
NTS

NOTES

1. UNLESS OTHERWISE NOTED ALL MATERIALS SHALL CONFORM TO THE STATE OF OHIO DEPARTMENT OF TRANSPORTATION (ODOT) CONSTRUCTION AND MATERIAL SPECIFICATIONS DATED JANUARY 1, 1995.
2. EROSION CONTROL BLANKETS SIMILAR TO NORTH AMERICAN GREEN STRAW/COCONUT TYPE SC 150. .35 LB/SY. OF STRAW, .15 LB/SY COCONUT. NET SHALL BE HEAVYWEIGHT UV STABILIZED TOP, AND LIGHTWEIGHT BOTTOM. THREAD SHALL BE COTTON, BIO-DEGRADABLE.

2038

REF DWG NO.	DRAWING TITLE
91X-5900-X-00216	DRAWING INDEX
91X-5900-X-00217	LEGEND AND SYMBOLS
91X-5900-G-00135	SITE PLAN/DEMOLITION PLAN
91X-5900-G-00136	GRADING PLAN - SHEET 1 OF 2
91X-5900-G-00137	GRADING PLAN - SHEET 2 OF 2

REV NO	ISSUE OF REVISION PURPOSE - DESCRIPTION	A-E	FERNCO	DATE
0	CERTIFIED FOR CONSTRUCTION		NA	2/13/96

UNITED STATES DEPARTMENT OF ENERGY
FERNALD ENVIRONMENTAL MANAGEMENT PROJECT

THIS DRAWING PREPARED BY
PARSONS
THE RALPH M. PARSONS CO. - PARSONS MAIN, INC. - ENGINEERING-SCIENCE, INC.
CINCINNATI, OHIO

PROJECT NAME
OU1 REMDIATION SYSTEM DESIGN
SITE IMPROVEMENT

DRAWING TITLE
CIVIL DETAILS
SHEET 3 OF 6

DRAWN BY	DATE	LEAD ENGINEER	DATE	CHECKED BY	DATE
R. ESPARZA	08/06/95		3/4/96	E. KUBRIN	01/05/96

PLANT/BLDG NO | FLOOR | SCALE: NONE | CLASS

SUBMITTED FOR APPROVAL | FERNCO CRU APPROVAL: NA

DOE PROJECT NO | TEMP PROJECT NO: WBS 1.1.1.1.1.3.1 00-90701 | DRAWING INDEX CODE NO: 91X-5900-G-00145 | SHEET NO: G0012 | REV NO: 0

PREPARED UNDER PARSONS PROJECT ORDER NUMBER: WPRAP/P0145

416

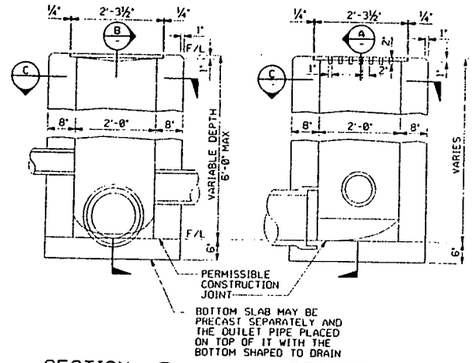

SECTION A NTS

SECTION B NTS

NOTES:

1. LOCATION AND ELEVATION WHEN GIVEN ON THE PLANS OR PROFILE IS TOP CENTER OF THE GRATE.
2. GRATING AND FRAME - THE DESIGN SHALL BE ESSENTIALLY THE SAME AND EQUALLY AS STRONG AS THE ONE SHOWN HEREON. WEIGHT OF GRATE, 20 LBS MINIMUM WEIGHT OF FRAME, 40 LBS.
3. BRICK,CONCRETE BLOCK OR CAST-IN-PLACE WALLS HAVE A NOMINAL THICKNESS OF 8 INCHES. PRECAST WALLS SHALL HAVE A MINIMUM THICKNESS OF 6 INCHES AND BE REINFORCED SUFFICIENTLY TO PERMIT SHIPPING AND HANDLING WITHOUT DAMAGE.
4. CONCRETE,CAST-IN -PLACE,TO BE CLASS C. ALL PRECAST CONCRETE SHALL MEET THE REQUIREMENTS OF 706.13 WITH 6 +/- 2% AIR VOID CONTENT IN THE HARDENED CONCRETE AND BE MARKED WITH CATCH BASIN NUMBER.
5. OPENINGS FOR PIPES SHALL BE O.D. +2" WHEN FABRICATED OR FIELD CUT.

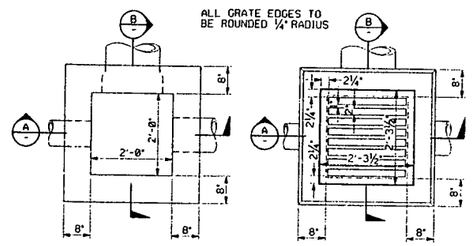

SECTION C NTS

PLAN VIEW

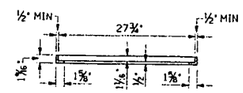

SECTION THOUGH ANGLE FRAME

ODOT 2-2B CATCH BASIN (1) G00146 REF G00136 G00137 G00178 NTS

NOTE:
FOR CATCH BASINS ST-2 AND ST-3 USE ODOT 2-3 CATCH BASIN.

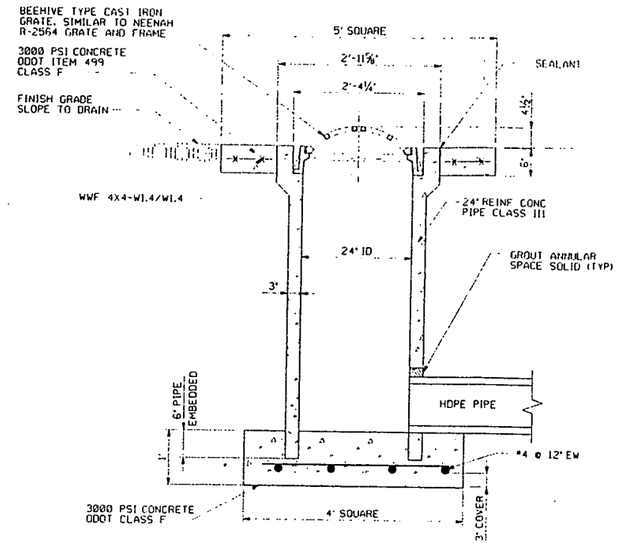

INLET BASIN (2) G00146 REF G00136 G00137 NTS

NOTES

1. UNLESS OTHERWISE NOTED ALL MATERIALS SHALL CONFORM TO THE STATE OF OHIO DEPARTMENT OF TRANSPORTATION (ODOT) CONSTRUCTION AND MATERIAL SPECIFICATIONS DATED JANUARY 1, 1995.

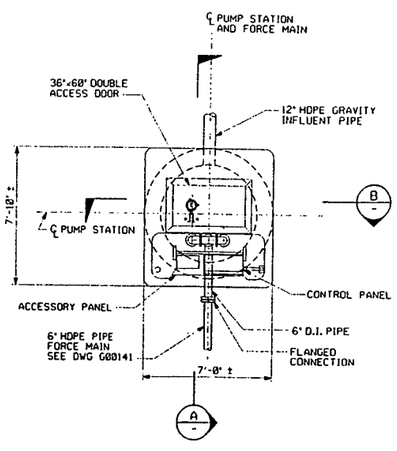

PLAN VIEW

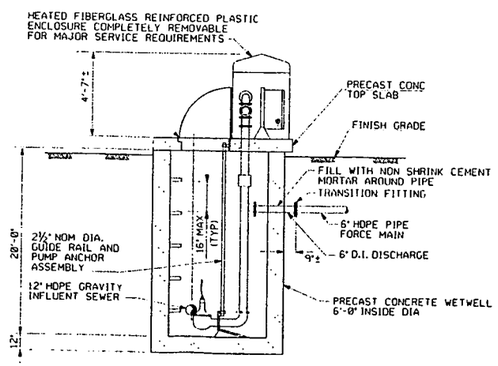

SECTION A NTS

NOTE: PUMP STATION SHOWN IS A GORMAN-RUPP J-SERIES. OTHER UNITS MAY BE CONSIDERED AS PROVIDED FOR IN THE SPECIFICATIONS

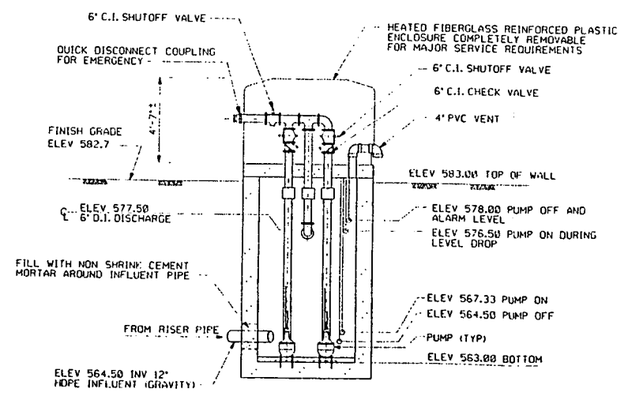

SECTION B NTS

PUMP STATION (3) G00146 REF G00141 G00177 NTS

REF DWG NO.	DRAWING TITLE
91X-5900-X-00216	DRAWING INDEX
91X-5900-X-00217	LEGEND AND SYMBOLS
91X-5900-G-00136	GRADING PLAN - SHEET 1 OF 2
91X-5900-G-00137	GRADING PLAN - SHEET 2 OF 2
91X-5900-G-00141	UTILITY PLAN
91X-5900-G-00177	UTILITY PROFILE - FORCE MAIN

REV NO	ISSUE OR REVISION PURPOSE - DESCRIPTION	A-E	FERNALD	DATE
0	CERTIFIED FOR CONSTRUCTION		NA	4/4/96

UNITED STATES DEPARTMENT OF ENERGY
FERNALD ENVIRONMENTAL MANAGEMENT PROJECT

THIS DRAWING PREPARED BY
PARSONS
THE RALPH M. PARSONS CO. - PARSONS MAIN, INC. - ENGINEERING-SCIENCE, INC.
CINCINNATI, OHIO

PROJECT NAME
OU1 REMEDIATION SYSTEM DESIGN
SITE IMPROVEMENT

DRAWING TITLE
CIVIL DETAILS
SHEET 4 OF 6

DRAWN BY	DATE	LEAD ENGINEER	DATE	CHECKED BY	DATE
R. ESPARZA	01/30/95		2/14/96	D. REED	01/30/96

PLANT/BLDG NO | FLOOR | SCALE: NONE | CLASS

SUBMITTED FOR APPROVAL | FERNALD CRU APPROVAL: NA

DOE PROJECT NO	FEMP PROJECT NO	DRAWING INDEX CODE NO	SHEET NO	REV NO
	WBS 1.1.1.1.1.3.1 00-90701	91X-5900-G-00146	G0013	0

PREPARED UNDER PARSONS PROJECT ORDER NUMBER WPRAP/P0145

417

2038

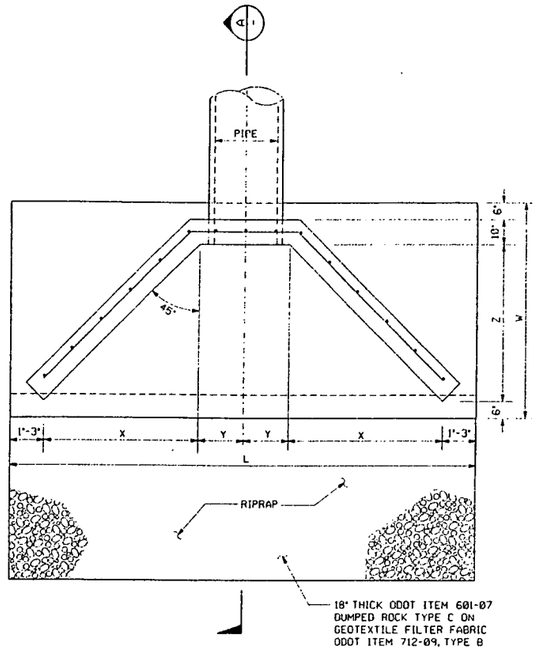

PLAN
NTS

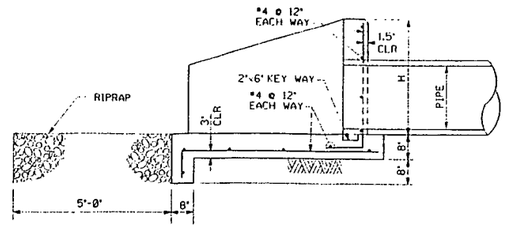

HEADWALL MAIN DIMENSION						
PIPE SIZE	L	W	H	X	Y	Z
18"	11'-10"	5'-3"	3'-0"	3'-5"	1'-3"	3'-5"
24"	14'-0"	6'-1"	3'-6"	4'-3"	1'-6"	4'-3"

SECTION A
NTS

HEADWALL WITH WINGS 1 G00206 REF G00136 G00137 G00175 G00178
NTS

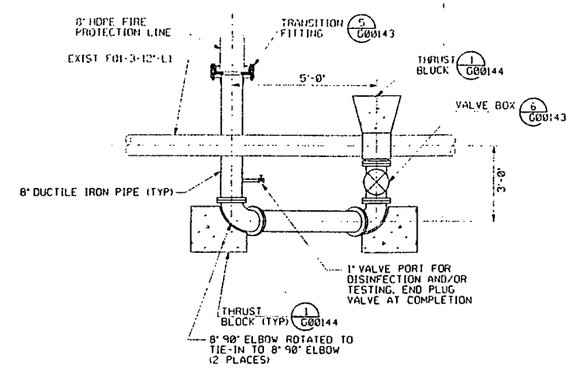

NOTE:
FOR WET TAP INSTALL 12"X8" DUAL COMPRESSION SEAL TAPPING SLEEVE OVER EXISTING WATER LINE OR INSTALL 12" CUTTING-IN SLEEVE AND 12"X8" TAPPING TEE FOR DRY TAP

NORTH FIRE PROTECTION TIE-IN 3 G00206 REF G00141 G00176
NTS

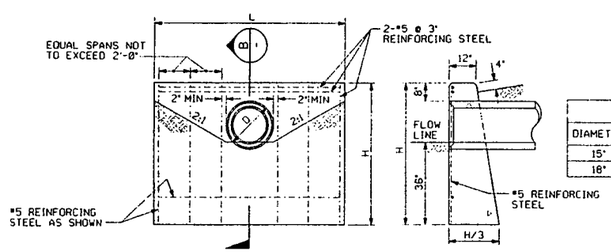

DIMENSIONS		
DIAMETER	H	L
15"	5'-2"	7'-0"
18"	5'-5"	8'-4"

ELEVATION
NTS

SECTION B
NTS

NOTES

1. HEADWALL WHERE REQUIRED WILL BE PROVIDED FOR NON-SKEWED CULVERTS HAVING A DIAMETER OR RISE OF 36 INCHES OR LESS.
2. CONCRETE SHALL BE CLASS "C". REINFORCING STEEL SHALL BE #5 AS SHOWN.
3. CHAMFER ALL EXPOSED CORNERS ¾ OF AN INCH.
4. FOR TWIN 18" PIPES PROVIDE 1'-0" MINIMUM CLEARANCE BETWEEN PIPES.

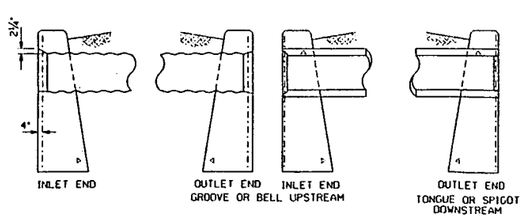

END TREATMENT AT HEADWALL

HEADWALL 2 G00206 REF G00137
NTS

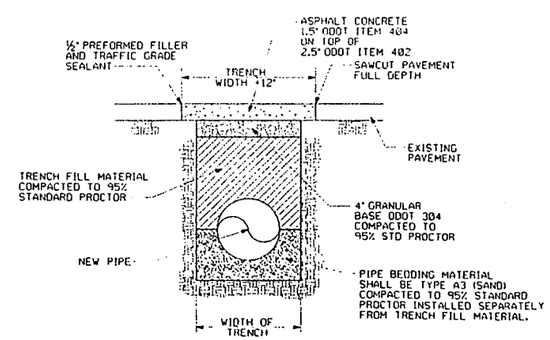

PAVEMENT REPAIR DETAIL 4 G00206 REF G00137
NTS

NOTES

1. UNLESS OTHERWISE NOTED ALL MATERIALS SHALL CONFORM TO THE STATE OF OHIO DEPARTMENT OF TRANSPORTATION (ODOT) CONSTRUCTION AND MATERIAL SPECIFICATIONS DATED JANUARY 1, 1995.

~~2035~~

2038

REF DWG NO.	DRAWING TITLE
91X-5900-X-00216	DRAWING INDEX
91X-5900-X-00217	LEGEND AND SYMBOLS
91X-5900-G-00141	UTILITY PLAN
91X-5900-G-00136	GRADING PLAN - SHEET 1 OF 2
91X-5900-G-00137	GRADING PLAN - SHEET 2 OF 2
91X-5900-G-00175	GRADING SECTIONS
91X-5900-G-00176	UTILITY PROFILE - FIREWATER LINE
91X-5900-G-00178	UTILITY PROFILES - CULVERTS
91X-5900-G-00143	DETAILS - SHEET 1 OF 6
91X-5900-G-00144	DETAILS - SHEET 2 OF 6

REV NO	REVISION PURPOSE - DESCRIPTION	A/E	FERNALD	DATE
0	CERTIFIED FOR CONSTRUCTION		NA	7/4/96

INITIALS AND DATE

UNITED STATES DEPARTMENT OF ENERGY
FERNALD ENVIRONMENTAL MANAGEMENT PROJECT

THIS DRAWING PREPARED BY
PARSONS
THE RALPH M. PARSONS CO. - PARSONS MAIN, INC. - ENGINEERING-SCIENCE, INC.
CINCINNATI, OHIO

PROJECT NAME
OU1 REMDIATION SYSTEM DESIGN
SITE IMPROVEMENT

DRAWING TITLE
CIVIL
DETAILS
SHEET 5 OF 6

DRAWN BY	DATE	LEAD ENGINEER	DATE	CHECKED BY	DATE
W. LIU	12/01/95		7/4/96	D. REED	01/01/96

PERMIT/ECN NO	FLOOR	SCALE	CLASS
		NONE	

SUBMITTED FOR APPROVAL	FERNALD CRU APPROVAL
A/E DATE	NA DATE

418

PREPARED UNDER PARSONS PROJECT ORDER NUMBER	DOE PROJECT NO	FEMP PROJECT NO	DRAWING INDEX CODE NO	SHEET NO	REV NO
WPRAP/P0145		WBS 1.1.1.1.1.3.1 00-90701	91X-5900-G-00206	G0014	0

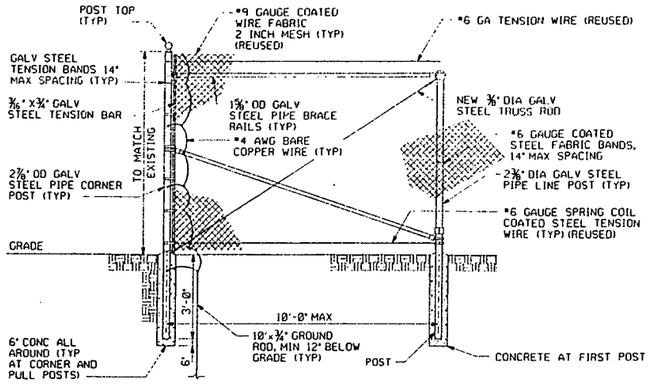

PULL POST FENCE (1) REF G00207 G00135
NTS

NOTES:

1. BOLTS SHALL BE ASTM A-193 GR B7 WITH LOCK WASHERS AND HEAVY HEX NUTS ASTM A-194 GR 2H.
2. BOLT HOLE DIAMETER TO BE 1/8 INCH LARGER THAN BOLT DIAMETER.
3. ALL GUIDE MATERIAL CARBON STEEL EXCEPT AS NOTED.
4. ALL WELDING TO BE DONE PRIOR TO INSTALLING METAL PARTS AGAINST DUCTILE IRON PIPE
5. EXPOSED CARBON STEEL MATERIAL TO BE PAINTED AS FOLLOWS:
   A. PREPARE SURFACE IN ACCORDANCE WITH STEEL STRUCTURES PAINTING COUNCIL (SSPC) SP-6.
   B. PRIME ALL BARE METAL NOT IN CONTACT WITH CONCRETE/GROUT WITH ZINC-RICH LEAD FREE PRIMER. APPLY TWO COATS OF EXTERIOR LATEX GLOSS ENAMEL FOR THE FINISH COAT. FOLLOW SSPC PAINT 13 AND PAINT 20.

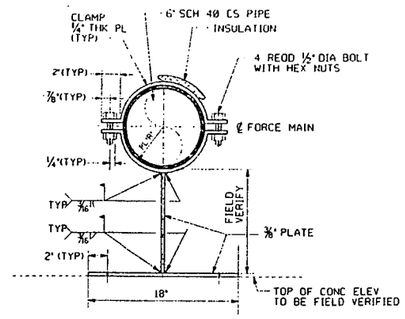

SECTION

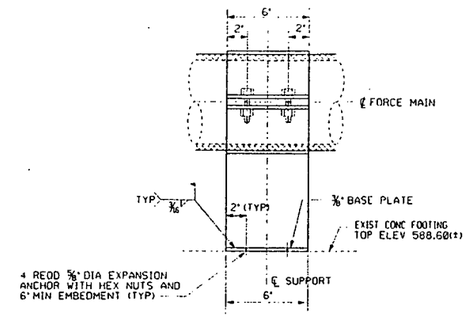

ELEVATION

FORCE MAIN SUPPORT (2) REF G00207 G00141 G00177
NTS

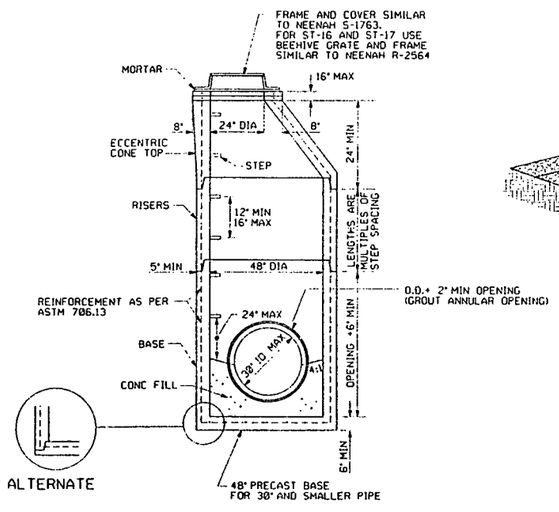

ODOT MH-3 MANHOLE (3) REF G00207 G00136 G00137 G00178
NTS

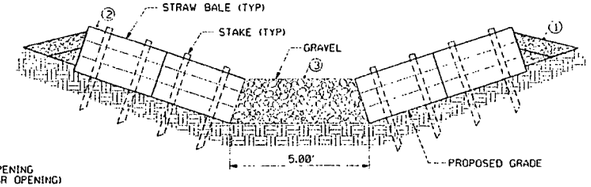

① ODOT ITEM 304 STABILIZED CRUSHED AGGREGATE (2-6" COURSES) ON FILTER FABRIC, ODOT ITEM 712.09, TYPE D.
② INSTALL STRAW BALE AS SHOWN ON DWG G00144.
③ GRAVEL TO BE ODOT ITEM 601.07, TYPE D DUMPED ROCK. TOP WIDTH TO BE SAME AS STRAW BALES.

CHECK DAM (4) REF G00207 G00136 G00137
NTS

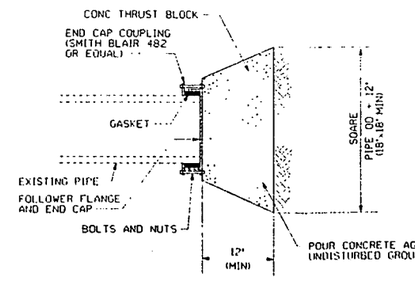

END CAP (5) REF G00207 G00135
NTS

NOTE:
CONTRACTOR TO FIELD MEASURE EXIST PIPE OD BEFORE ORDERING CORRECT SIZE OF END CAP COUPLING.

419

NOTES

1. UNLESS OTHERWISE NOTED ALL MATERIALS SHALL CONFORM TO THE STATE OF OHIO DEPARTMENT OF TRANSPORTATION (ODOT) CONSTRUCTION AND MATERIAL SPECIFICATIONS DATED JANUARY 1, 1995.

[redacted]

2038

REF DWG NO.	DRAWING TITLE
91X-5900-X-00216	DRAWING INDEX
91X-5900-X-00217	LEGEND AND SYMBOLS
91X-5900-G-00135	SITE PLAN/DEMOLITION PLAN
91X-5900-G-00141	UTILITY PLAN
91X-5900-G-00136	GRADING PLAN - SHEET 1 OF 2
91X-5900-G-00137	GRADING PLAN - SHEET 2 OF 2
91X-5900-G-00177	UTILITY PROFILE - FORCE MAIN
91X-5900-G-00178	UTILITY PROFILES - CULVERTS

REV NO	REVISION PURPOSE - DESCRIPTION	A-E	FERMCO	DATE
0	CERTIFIED FOR CONSTRUCTION		NA	2/6/96

UNITED STATES DEPARTMENT OF ENERGY
FERNALD ENVIRONMENTAL MANAGEMENT PROJECT

THIS DRAWING PREPARED BY
PARSONS
THE RALPH M. PARSONS CO. - PARSONS MAIN, INC. - ENGINEERING-SCIENCE, INC.
CINCINNATI, OHIO

PROJECT NAME
OU1 REMDIATION SYSTEM DESIGN
SITE IMPROVEMENT

DRAWING TITLE
CIVIL DETAILS
SHEET 6 OF 6

DRAWN BY	DATE	LEAD ENGINEER	DATE	CHECKED BY	DATE
R. LINDGREN	11-28-95	[signature]	2/6/96	E. KUBAIN	01/03/96

PLANT/BLDG NO	FLOOR	SCALE	CLASS
		NONE	

SUBMITTED FOR APPROVAL	FERMCO CRU APPROVAL
[signature] DATE	NA DATE

PREPARED UNDER PARSONS PROJECT ORDER NUMBER	DOE PROJECT NO	TEMP PROJECT NO	DRAWING REF (CODE NO)	SHEET NO	REV NO
WPRAP/P0145		WBS 1.1.1.1.1.3.1 00-90701	91X-5900-G-00207	G0015	0

[redacted]

NOTES

1. EXISTING CONDITIONS SHOWN ON THIS DRAWING WERE PREPARED FROM THE DOCUMENTS LISTED BELOW.

EXISTING SITE DATA SOURCE (IN PLANT FILES)
PARSONS TOPOGRAPHY, 1992

~~235~~

2038

REF DWG NO.	DRAWING TITLE
91X-5900-X-00216	DRAWING INDEX
91X-5900-X-00217	LEGEND AND SYMBOLS
91X-5900-G-00135	SITE PLAN / DEMOLITION PLAN

REV NO	ISSUE OR REVISION PURPOSE DESCRIPTION	A E	FERNALD	DATE
0	CERTIFIED FOR CONSTRUCTION		NA	2/6/96

ORIGINATOR AND DATE

UNITED STATES DEPARTMENT OF ENERGY
FERNALD ENVIRONMENTAL MANAGEMENT PROJECT

THIS DRAWING PREPARED BY
PARSONS
THE RALPH M. PARSONS CO. - PARSONS MAIN, INC. - ENGINEERING-SCIENCE, INC.
CINCINNATI, OHIO

PROJECT NAME
OU1 REMEDIATION SYSTEM DESIGN
SITE IMPROVEMENT

DRAWING TITLE
CIVIL
BORROW AREA LOCATION

DRAWN BY	DATE	LEAD ENGINEER	DATE	DESIGNED BY	DATE
R. LINDGREN	12/29/95			E. KUBRIN	01/05/96

PLANT/BLDG NO	FLOOR	SCALE	CLASS
		1"=60'	

SUBMITTED FOR APPROVAL	FERNCO CRU APPROVAL
A E / DATE	NA / DATE

OU1 PROJECT NO	FEMP PROJECT NO	DRAWING REF CODE NO	SHEET NO	REV NO
	WBS 1.1.1.1.1.3.1 00-90701	91X-5900-G-00214	G0016	0

PREPARED UNDER PARSONS PROJECT ORDER NUMBER
WPRAP/P0145

420

[redacted]

2038

Site Improvement Plan
Construction Specifications

Operable Unit 1
Project Order 145
WBS No. 1.1.1.1.1.3.1
February 1996
Revision 0

Environmental Remedial Action Project
Fernald Environmental Management Project
Fernald, Ohio
FERMCO Subcontract No. 2-21487

PARSONS

25 Merchant Street
Cincinnati, Ohio 45246

421

2038

U.S DEPARTMENT OF ENERGY

FERNALD ENVIRONMENTAL MANAGEMENT PROJECT

FERMCO Subcontract No. 2-21487

SITE IMPROVEMENT PLAN
CONSTRUCTION SPECIFICATIONS

PARSONS

Approved by: 2/14/96

S. Mallette, OU1 Project Manager Date

U.S. DEPARTMENT OF ENERGY
FERNALD ENVIRONMENTAL MANAGEMENT PROJECT
FERMCO SUBCONTRACT NO. 2-21487

SITE IMPROVEMENT PLAN
CONSTRUCTION SPECIFICATIONS
PROJECT ORDER 145
WBS NO. 1.1.1.1.1.3.1

SECTION 00003
TABLE OF CONTENTS

SECTION	TITLE	REV.	DATE
00001	TITLE PAGE	0	02/14/96
00002	APPROVAL SHEET	0	02/14/96
00003	TABLE OF CONTENTS	0	02/14/96
DIVISION 1 - GENERAL REQUIREMENTS			
01010	GENERAL REQUIREMENTS	0	02/14/96
01011	SUBMITTALS	0	02/14/96
01012	SCHEDULE OF DRAWINGS	0	02/14/96
DIVISION 2 - CIVIL			
02110	SITE CLEARING	0	02/14/96
02200	EARTHWORK	0	02/14/96
02270	EROSION CONTROL	0	02/14/96
02300	BORING AND JACKING	0	02/14/96
02667	SITE WATER LINES	0	02/14/96
02713	DETENTION POND LINER GEOMEMBRANE	0	02/14/96
02720	SITE DRAINAGE	0	02/14/96
02733	PUMP STATION	0	02/14/96
02831	CHAIN LINK FENCES AND GATES	0	02/14/96
02900	SOIL PREPARATION AND SEEDING	0	02/14/96
DIVISION 3 - CONCRETE			
03001	CONCRETE	0	02/14/96
DIVISION 4-16 - (NOT USED)			

END OF SECTION

SECTION 01010
GENERAL REQUIREMENTS

PART 1 GENERAL

1.1 SCOPE

A. These general requirements form a part of the technical divisions of these specifications.

B. In all cases where the words "A/E Subcontractor" appear in these specifications, it shall be understood to refer to PARSONS or to such other individuals or organizations acting within the scope of the specific duties entrusted to them.

C. In all cases where the terms "Vendor" or "Seller" or "Manufacturer" or similar terms appear in these specifications or in the appendices to these specifications, they shall be understood to refer to an individual or firm(s) providing materials, equipment, or services, as noted, under a subcontract to Fernald Environmental Restoration Management Corporation (FERMCO).

D. In all cases where the term "Subcontractor" appears in these specifications, it shall be understood to refer to the Construction Contractor or Subcontractor.

E. In all cases where the words "Owner's Agent" or "Construction Manager" appear, they shall be understood to refer to FERMCO.

F. The Subcontractor shall perform all construction acceptance tests as coordinated and supervised by FERMCO. In addition, before the final acceptance of the work, the Subcontractor shall perform an integrated system construction acceptance test as coordinated and supervised by FERMCO.

G. The Subcontractor shall provide written procedures for FERMCO's review and approval of all tests to be

performed as identified in the drawings and specifications. These procedures shall provide detailed step-by-step operations with sign-off columns and shall be submitted and approved prior to testing. Generally, all field test instruments shall have been calibrated, prior to use on this subcontract, by a calibration laboratory whose calibration equipment and instruments are fully traceable to National Institute of Science and Technology (NIST) standards. The Subcontractor shall maintain individual certification of calibration which evidences traceability to NIST standards for all field test instruments used on this subcontract.

H. All work shall be accomplished in accordance with the following code requirements:

1. Ohio Basic Building Code (OBBC) 1995.
2. Uniform Building Code (UBC) 1994.
3. Code for Safety to Life from Fire in Buildings and Structures (NFPA 101, Life Safety Code) - 1994.
4. All other National Fire Protection Association (NFPA) Codes - All inclusive, including 1995 revisions.
5. Occupational Safety and Health Administration (OSHA) - 29 CFR 1910 and 29 CFR 1926.

1.2 SITE AND SCOPE

A. The intent of these specifications is to provide all technical information required and necessary to perform and complete the work as required by the Contract.

B. The Subcontractor shall provide all labor, services, materials, and equipment, and shall do all work necessary to accomplish this within the limits of work as defined in the accepted bid and/or Contract.

1.3 LISTS OF MATERIALS, MANUFACTURERS, OR EQUIPMENT SUPPLIERS

A. The listing of materials, equipment, manufacturers' names, or equipment suppliers in these specifications in no way precludes the offerer from proposing

alternate materials, equipment, manufacturers' names, or equipment suppliers of any of the items to be furnished within the scope of these specifications, except where specifically precluded by these specifications. These lists are intended to identify the types and general quality of those items that will be included in the offerer's proposal. It is the offerer's responsibility to propose the materials, manufacturers' names, or equipment that is best suited for this project in combined terms of quality and price.

1.4 SUBMITTALS - SHOP DRAWINGS, SAMPLES, AND OTHER DATA

A. Section 01011 has the submittal listing. Refer to Part 6 and 7, Statement of Work, in the Invitation for Bid for other submittal requirements. Any submittals not in conformance with these requirements will be returned without review for correction and resubmittal:

1. Assemble and submit, if required, in logically arranged folders, the following:
   a. All instruction bulletins, diagrams, lubrication schedules, operating instructions, parts lists, and pamphlets for equipment and apparatus furnished, including vendor's or manufacturer's recommended procedure for lifting, handling, and installing equipment.
2. Submittals for equipment shall include manufacturer's catalog "cut sheets" or similar information bulletins indicating the model number or catalog number, ratings, size, weight, and performance curves and data. Indicate operating point on curves and tabular data for each piece of equipment that curves or data represent.
3. Submit wiring diagrams or connection diagrams for equipment items, accompanied by adequately defined symbols list. Schematic and wiring diagrams must be prepared in accordance with ANSI/IEEE Publication Y32E, "Electrical and Electronics Graphics Symbols and Reference Designations." Individual 8-1/2 by 11-inch elementary and wiring drawings are not acceptable.

4. Indicate all performance data, construction material finishes, and modifications to manufacturer's standard design specified.
5. Locate termination points for all required external wiring.
6. Indicate roughing-in, foundation, and support point dimensions.
7. Submit written test procedures for all required testing. Include criteria for acceptable performance. Submit test reports after completion of tests.
8. Submit Material Safety Data Sheets (MSDSs), if required, for all cutting oils, caulks, sealants, lubricants, paints, etc., and all other similar compounds.
9. The A/E Subcontractor's review of such submittals shall not relieve the Subcontractor from any responsibility for deviations from contract drawings or specifications, unless the Subcontractor has in writing called the A/E Subcontractor's attention to such deviations at the time of submission, nor shall it relieve the Subcontractor from responsibility for errors of any sort in the submittals nor from responsibility for the proper fitting and construction of the work.
10. Submittals will be reviewed with respect to such factors as quality of draftsmanship, legibility, and evidence that the Subcontractor is aware of the necessity and importance of adequately detailing and illustrating special features and conditions relating to the work. Dimensions, sizes, construction details, and directive notes shown will be reviewed for accuracy, compliance with the specifications, adequacy, interferences, etc., on a spot check or incomplete basis to establish that the Subcontractor has given such factors careful attention.
11. Any changes marked on submittals during review will be for the purpose of indicating the requirements of the contract documents, and no change in the contract amount is authorized by such markings.

12. When submittals are found to be satisfactory with respect to the above factors and within the scope of the review outlined above, they will be returned by FERMCO to the Subcontractor bearing certificate attachment permitting the Subcontractor to employ them in the furtherance of the Subcontractor's work under the contract, but only with the express understanding that such permission shall not relieve the Subcontractor of the responsibilities for the full performance of the work required under the contract in conformance with the contract documents governing such performance, nor for any other deficiencies in the submittals such as inaccuracies, discrepancies, omissions, interferences in the work itself, or with the work of other contractors, whether or not such deficiencies were observed or noted in the course of the review of the shop drawings.
13. The Subcontractor shall verify all field dimensions required for shop drawings.

1.5 REFERENCES

A. The publications listed in the the technical specifications form part of this specification. Each publication shall be the latest revision and addendum in effect at the time of issue of contract and of issue of the specification unless notified otherwise. Except as modified herein or the details of the drawings, work included in this specification shall conform to the applicable provisions of these publications.

1.6 OPERATING MANUALS AND SPARE PARTS LISTS

A. Copies of manufacturers recommended spare parts list shall be submitted prior to the shipment of any item of equipment.

B. An Installation, Operation, and Maintenance (IOM) Manual shall be prepared so as to provide optimum

operation and maintenance of the equipment and systems being furnished.

C. The cover of the IOM Manual shall include the following information:

1. Project Title -
2. WBS No. -
3. A/E Subcontractor - PARSONS.
4. Construction Manager - FERMCO.
5. Subcontractor (Name of Subcontractor, if any).

D. The IOM Manuals shall be bound into one or more volumes for ease of handling and shall have an index. The manual shall include descriptive literature, drawings, performance curves and rating data, test reports, and spare parts lists. The maintenance section shall divide maintenance procedures into two categories, "Preventive Maintenance" and "Corrective Maintenance," and a subsection for "Safety Precautions." Preventive maintenance shall include cleaning and adjustment instructions. Corrective Maintenance shall include instructions and data arranged in the normal sequence of corrective maintenance (i.e., troubleshooting) (logical effect to cause), then repair and replacement of parts, then the parts list. Safety Precautions shall comprise a list of safety precautions and instructions to be followed before, during, and after making repairs, adjustments, or routine maintenance.

E. Submit complete sets of final, approved manuals prior to the shipment of the equipment or system.

1.7 SPECIFICATION EXPLANATION

A. General: The technical specifications are of the abbreviated, simplified, or streamlined type and include incomplete sentences. Omissions of words or phrases such as "the contractor shall," "in conformity therewith," "shall be," "as noted on the drawings," "according to the plans," "a," "the," and "all" are intentional. Omitted words or phrases shall be supplied by inference in the same manner as they are when a "note" occurs on the drawings.

The Subcontractor shall provide all items, articles, materials, operations, or methods listed, mentioned, or scheduled either on the drawings, or specified herein, or both, including all labor, materials, equipment, and incidentals necessary and required for their completion and installation.

For convenience of reference and to facilitate the letting of contracts, the specifications may be separated into titled divisions. Such separations, however, shall not operate to make the A/E Subcontractor an arbitrator to establish the limits of subcontracts in any manner. The following defines the separations referred to in the specifications.

1. Division: Separate numbered division of specifications (e.g., Div. 16)
2. Section: Separate numbered section of a division (e.g., Sec. 16020)
3. Article: Separate numbered article of a subsection (e.g., Article 2.1)

B. Definitions: Certain terms and words as used throughout the specifications shall be defined as follows, unless otherwise particularly specified:

1. "Provide": Furnish and install, complete, in place.
2. "Indicated": As shown on the drawings and/or specified.
3. "Directed," "Authorized," "Permitted": Shall be as directed, authorized, or permitted by FERMCO.
4. "Selected": Shall be as selected by the A-E/Subcontractor or FERMCO.
5. "Satisfactory," "Acceptable": Satisfactory or acceptable to FERMCO.
6. "Necessary," "Required," "Suitable": As necessary, required, or suitable for the intended purpose as determined by FERMCO.

7. "Submit": Submit to. FERMCO unless otherwise specified

1.8 ABBREVIATIONS FOR REFERENCED STANDARDS AND SPECIFICATIONS

A. The following list denotes abbreviations used in the technical portions of these specifications:

Abbreviation	Authority
AASHTO	American Association of State Highway and Transportation Officials.
ACI	American Concrete Institute
ADC	Air Diffusion Council
AGC	Associated General Contractors of America
AISC	American Institute of Steel Construction
AISI	American Iron and Steel Institute
AMCA	Air Movement and Control Association
ANSI	American National Standards Institute
APA	American Plywood Association
API	American Petroleum Institute
ARI	Air Conditioning and Refrigeration Institute
ASCE	American Society of Civil Engineers
ASHRAE	American Society of Heating, Refrigerating, and Air Conditioning Engineers
ASME	American Society of Mechanical Engineers
ASTM	American Society for Testing and Materials
AWS	American Welding Society
AWWA	American Water Works Association
CFR	Code of Federal Regulations
DHI	Door and Hardware Institute
FGMA	Flat Glass Marketing Association
FM	Factory Mutual System
GA	Gypsum Association

Abbreviation	Authority
ICBO	International Conference of Building Officials
IEEE	Institute of Electrical and Electronics Engineers
IMIAC	International Masonry Industry All-Weather Council
MBMA	Metal Building Manufacturers Association
NAAMM	National Association of Architectural Metal Manufacturers
NCMA	National Concrete Masonry Association
NEC	National Electrical Code
NEMA	National Electrical Manufacturers Association
NFPA	National Fire Protection Association
NIST	National Institute of Science and Technology
NPCA	National Paint and Coatings Association
ODOT	Ohio Department of Transportation
PCA	Portland Cement Association
PCI	Prestressed Concrete Institute
PDCA	Painting and Decorating Contractors of America
PS	United States Department of Commerce, Voluntary Products Standards
SDI	Steel Deck Institute
SDI	Steel Door Institute
SIGMA	Sealed Insulating Glass Manufacturers Association
SJI	Steel Joist Institute
SMACNA	Sheet Metal and Air Conditioning Contractors National Association
SSPC	Steel Structures Painting Council
UL	Underwriters Laboratories, Inc.

END OF SECTION

SECTION 01011
SUBMITTALS

A. Submittal Requirements: Submittals required include drawings and/or data for all items listed below.

1. "AA" designates that items marked are special requirements.
2. "BB" designates that shop drawings are required.
3. "CC" designates that catalog cuts are required.
4. "DD" designates that Material Certificates are required.
5. "EE" designates that Certificates of Conformance are required.
6. "FF" designates that engineering calculations are required.
7. "GG" designates that spare parts list is required.
8. "HH" designates that installation, operation, and maintenance manuals (IOMs) are required.
9. "II" indicates that manufacturer's material safety data sheets (MSDSs) are required.
   "JJ" indicates that wiring diagrams for power, signal, and control wiring are required.
10. "KK" indicates that tests, which are to be witnessed by FERMCO, are required.
11. "LL" indicates that test reports are required.

B. See attached sheets for submittal schedules.

END OF SECTION

PARSONS
ERA PROJECT

Section 01011 of Specifications
Submittal Listing
Division 2

Material/Equipment/Item/Description	Special Reqts AA	Shop Dwgs BB	Catalog Cuts CC	Material Certif DD	Certif Conform EE	Eng Calcs FF	Spare Parts GG	IOM Manual HH	MSDS II	Wiring Diagram JJ	Tests Witnessed KK	Test Rept LL	Samples MM	NN
Section 02110 - Site Clearing														
Traffic Control Plan														
Waste Handling Plan														
Section 02200 - Earthwork														
Dewatering Plans						X								
Compaction Test												X		
As-Built Drawings						X								
Soil Test												X		
Section 02270 - Erosion Control														
Maintenance/Instruction														
Seed														
Product Data			X											
Waste Handling Plan		X					X							
Section 02300 - Boring and Jacking														

2038

435

PARSONS
ERA PROJECT

Attachment 1 to Section 01010 of Specifications
Submittal Listing
Division 2

Material/Equipment/Item/Description	Special Reqts AA	Shop Dwgs BB	Catalog Cuts CC	Material Certif DD	Certif Conform EE	Eng Calcs FF	Spare Parts GG	IOM Manual HH	MSDS II	Wiring Diagram JJ	Tests Witnessed KK	Test Rept LL	Samples MM	NN
Section 02667 - Site Water Lines														
Pipe		X	X	X										
Fittings		X	X	X										
As-Built Drawings					X									
Hydrostatic Test											X			
Section 02713 - Detention Pond Liner Geomembrane														
Liner Geomembrane	X	X	X	X	X		X				X		X	
As-Built Drawings					X									
Quality Control											X			
Section 02720 - Site Drainage														
Manholes and Inlets	X	X												
Pipe	X	X	X											
As-Built Drawings					X									
Concrete Mix											X			
Section 02733 - Pump Station														
Manufacturer's Support Literature	X	X	X		X		X	X						
Section 02831 - Chain Link Fences														
Fabric and Posts					X									
Section 02900 - Soil Preparation and Seeding														
Maintenance Data								X						
Certificate				X										
Product Data			X											

PARSONS
ERA PROJECT

Attachment 1 to Section 01010 of Specifications
Submittal Listing
Division 2

Material/Equipment/Item/Description	Special Reqts AA	Shop Dwgs BB	Catalog Cuts CC	Material Certif DD	Certif Conform EE	Eng Calcs FF	Spare Parts GG	IOM Manual HH	MSDS II	Wiring Diagram JJ	Tests Witnessed KK	Test Rept LL	Samples MM	NN
Filter Fabrics			X											X
Section 03001 - Concrete														
Concrete Mix											X	X		
Reinforcing Bar		X									X			

2038

436

SECTION 01012
SCHEDULE OF DRAWINGS

1.1 DRAWINGS

A. The following drawings are hereby made a part of this contract:

	Drawing Number	Drawing Title
1.	91X-5900-X-00215	Project Title Sheet
2.	91X-5900-X-00216	Drawing Index
3.	91X-5900-X-00217	Legend and Symbols
4.	91X-5900-G-00135	Civil - Site Plan/Demolition Plan
5.	91X-5900-G-00141	Civil - Utility Plan
6.	91X-5900-G-00136	Civil - Grading Plan - Sheet 1 of 2
7.	91X-5900-G-00137	Civil - Grading Plan - Sheet 2 of 2
8.	91X-5900-G-00175	Civil - Grading Sections
9.	91X-5900-G-00176	Civil - Utility Profile - Fire Protection Line
10.	91X-5900-G-00177	Civil - Utility Profile - Force Main
11.	91X-5900-G-00178	Civil - Utility Profile - Culvert
12.	91X-5900-G-00212	Civil - Utility Profiles - Storm Sewer
13.	91X-5900-G-00143	Civil - Details - Sheet 1 of 6
14.	91X-5900-G-00144	Civil - Details - Sheet 2 of 6
15.	91X-5900-G-00145	Civil - Details - Sheet 3 of 6
16.	91X-5900-G-00146	Civil - Details - Sheet 4 of 6
17.	91X-5900-G-00206	Civil - Details - Sheet 5 of 6
18.	91X-5900-G-00207	Civil - Details - Sheet 6 of 6
19.	91X-5900-G-00214	Civil - Borrow Area Location

END OF SECTION

&1

SECTION 02110
SITE CLEARING

PART 1 GENERAL

1.1 SECTION INCLUDES

A. Removal of surface debris.

B. Clearing of site plant life and grass, where it affects construction only.

C. Removal of fencing.

D. Removal of only designated underground and aboveground utilities.

E. Topsoil excavation.

1.2 RELATED SECTIONS

A. Section 01010 - General Requirements.

B. Section 01011 - Submittals.

C. Section 02200 - Earthwork.

D. Section 02270 - Slope Protection and Erosion Control.

E. Section 02831 - Chain Link Fences and Gates.

1.3 REFERENCE DRAWINGS

A. See Section 01012 for the Schedule of Drawings.

1.4 QUALITY ASSURANCE PROGRAM

A. Subcontractor shall use proper equipment to execute the work to conform to these specifications.

PART 2 PRODUCTS

Not used.

PART 3 EXECUTION

3.1 PREPARATION

A. Verify that existing utilities designated to remain are staked, flagged, and identified.

3.2 ERECTION/INSTALLATION/APPLICATION

A. Clearing:
1. Clear only areas required for access to site and execution of work. Obtain written approval of clearing limits from FERMCO.
2. Remove trees and shrubs within marked areas indicated.
3. Clear undergrowth and dead wood without disturbing subsoil.
4. Provide dust control using clean, potable water to the satisfaction of FERMCO.

B. Removal:
1. Remove debris, rock, and extracted plant life.
2. Remove existing fence to the limits shown on the Site Plan, 91X-5900-G-00135. The requirements of Section 02831 apply. Stockpile fence in a tied roll, and stack posts in a neat pile at location on site determined by FERMCO.

C. Utilities:
1. Verify that all utilities to be removed have been properly isolated and drained prior to removal.

D. Topsoil Excavation:
1. Excavate topsoil from areas to be graded.
2. Stockpile in area designated on site to a height not exceeding 8 feet. Protect from erosion. Remove excess topsoil not re-used from the stockpile to a site designated by FERMCO.

439 [redacted]

3.3 **PROTECTION**

A. Locate, identify, and protect from damage all utilities that remain.

B. Protect trees, plant growth, and features designated to remain as final landscaping.

C. Protect survey benchmarks, monitoring wells, and existing structures from damage or displacement.

D. Construct temporary roads and maintain existing roadways at the construction site, including dust control.

END OF SECTION

SECTION 02200
EARTHWORK

PART 1 GENERAL

1.1 SECTION INCLUDES

A. Excavating for retaining walls and grading activities for the stormwater management pond.

B. Excavating trenches for utilities.

C. Compacted fill from top of utility bedding to subgrade elevations.

D. Testing of compaction.

E. Site preparation.

F. Site restoration.

G. Erosion control.

H. Backfilling and compaction.

I. Removal of existing fence and existing utilities.

1.2 RELATED SECTIONS

A. Section 01010 - General Requirements.

B. Section 01011 - Submittals

C. Section 02110 - Site Clearing.

D. Section 02270 - Erosion Control.

E. Section 02300 - Boring and Jacking.

F. Section 02660 - Site Water Lines.

G. Section 02720 - Site Drainage.

1.3 REFERENCE DRAWINGS

A. See Section 01012 for the Schedule of Drawings.

1.4 REFERENCES

A. State of Ohio, Department of Transportation (ODOT):

1. Construction and Material Specifications, January 1, 1995. Except as supplemented or otherwise modified herein and/or shown on the construction drawings, the entire work under this section shall be in compliance with the provisions of ODOT.

B. American Association of State Highway and Transportation Officials (AASHTO):

1. AASHTO M43-88 — Standard Specification for Sizes of Aggregate for Road and Bridge Construction (ASTM D448).

C. American Society for Testing and Materials (ASTM):

1. ASTM C136-93 — Standard Test Method for Sieve Analysis of Fine and Coarse Aggregates (AASHTO T27).
2. ASTM D422-63 — Standard Test Method for Particle-Size Analysis of Soils (R 1990).
3. ASTM D698-91 — Test Method for Laboratory Compaction Characteristics of Soil Using Standard Effort (12,400 ft-lbf/ft [600 kN-m/m]).
4. ASTM D1556-90 — Standard Test Method for Density and Unit Weight of Soil in Place by the Sand-Cone Method (AASHTO T191).
5. ASTM D2487-93 — Standard Classification of Soils for Engineering Purposes (Unified Soil Classification System).

442

6. ASTM D2922-91 — Standard Test Methods for Density of Soil and Soil-Aggregate in Place by Nuclear Methods (Shallow Depth).
7. ASTM D3017-88 — Standard Test Method for Water Content of Soil and Rock in Place by Nuclear Methods (Shallow Depth) (R 1993) (AASHTO T239).
8. ASTM D1557-91 — Test Method for Laboratory Compaction Characteristics of Soil Using Modified Effort (56,000 ft lbf/ft [2,700 kN-m/m]).
9. ASTM D4318-93 — Standard Test Method for Liquid Limit, Plastic Limit, and Plasticity Index of Soils.

D. Occupational Safety and Health Administration, Labor, Code of Federal Regulations (CFR):
1. 29 CFR 1926.650, Subpart P - Excavations.

1.5 SYSTEM DESCRIPTION

A. This section involves work which requires earthwork, excavation, hauling, stockpiling, backfilling, and compaction relating to the retaining walls, water line, storm sewer, and pump station.

B. Definitions
1. Utility: Any buried pipe, conduit, or cable.

1.6 SUBMITTALS

A. Provide submittals per Section 01011.

B. Materials Source: Submit name of imported materials suppliers. Change of source requires FERMCO's approval.

C. Material suppliers shall be required to certify that supplied materials meet specifications prior to use.

D. Accurately record actual locations of utilities (i.e., buried pipe, conduit, or cable) remaining, by horizontal dimensions, elevations or inverts, and slope gradients. Submit information on as-built drawings.

E. Submit name and address of soil testing laboratory for approval. Provide FERMCO with copies of all lab/field soil tests performed by soil testing laboratory within 7 days from date of test.

F. Dewatering plan shall be submitted to and approved by FERMCO prior to dewatering activities.

1.7 QUALITY ASSURANCE PROGRAM

A. Verify that the existing utilities are as shown on drawings, and resolve any differences or conflicts with proposed work prior to excavating.

B. If tests indicate materials do not meet specified requirements, change material and retest at no cost to FERMCO.

C. Unless otherwise specified, all inspection and test reports shall be filed with FERMCO after the inspection or test.

D. The Subcontractor shall arrange and pay for an as-built survey of as-completed conditions (showing locations of PIVs, fire hydrants, pipe sizes, bends, and top of pipe elevations). An as-built site, utility, and grading plan shall be submitted to FERMCO.

E. Unless noted otherwise, all work shall be done in accordance with ODOT Section 200.

F. All work shall be done in accordance with the requirements of FERMCO.

G. The Subcontractor shall arrange and pay for the services of qualified, independent soil testing laboratory.

444

PART 2 PRODUCTS

2.1 EQUIPMENT

A. The Subcontractor shall supply all proper equipment necessary for the timely execution of the work, in the requisite numbers, sizes, and capacities.

2.2 MATERIALS

A. Fill Materials

1. ODOT Item 703 - Aggregate: Crushed stone; shall conform to AASHTO M43, size number 57, and within the following limits:

Sieve Size	Percent Passing
1-1/2 inches	100
1 inch	95 to 100
1/2	25 to 60
Number 4	0 to 10
Number 8	0 to 5

2. Subsoil Type S1: Excavated and re-used material, graded, free of lumps larger than 3 inches, rocks larger than 2 inches, and debris; conforming to ASTM D2487 Group Symbol CL, ML, SC.
3. Subsoil Type S2: Imported material, graded, free of lumps larger than 3 inches, rocks larger than 2 inches, and debris; conforming to ASTM D2487 Group Symbol CL, ML, SC.
4. Fine Aggregate Type A3: Sand - natural river or bank sand; washed; free of silt, clay, loam, friable or soluble materials, and organic matter; graded in accordance with ASTM C136 and D2487; within the following limits:

Sieve Size	Percent Passing
No. 4	90-100
No. 50.	7-40
No. 200	0-10

B. Water: Clean, uncontaminated, fresh, and free of debris.

C. Topsoil: Excavated and re-used material; graded; free of roots, rocks larger than 1/2 inch, subsoil, debris, weeds, and foreign matter not suitable for subsequent seeding operations and maintenance; conforming to ASTM D2487 Group Symbol OH. When feasible, topsoil shall be salvaged from the work area and stockpiled for re-use.

PART 3 EXECUTION

3.1 FIELD CONDITIONS

A. Before starting the project, the Subcontractor shall visit the site, examine all portions in detail, and become familiar with the project site. Should any portion or item not be as set forth by the contract documents, the Subcontractor shall immediately notify FERMCO in writing and request further direction or clarification.

3.2 PREPARATION

A. Identify required lines, levels, contours, and datum. Identify location and elevation of existing utilities prior to construction or fabrication of materials.

B. Excavation shall be done with extreme care to protect any monitoring wells, above- and below-grade utilities, and any other fence, structures, benchmarks, wells, and other items which will remain. All of these items are to be identified, flagged, protected, and the appropriate permits obtained prior to initiating work. The Subcontractor shall notify FERMCO immediately if any damage occurs to existing utilities, structures, etc. as a result of work. Subcontractor shall replace, at the Subcontractor's own expense, items damaged as a result of work.

C. Cut out soft areas of subgrade not capable of in situ compaction. Backfill with Fill Type S1 or S2 materials and compact to density equal to or greater than

requirements for subsequent backfill material. The Subcontractor shall notify FERMCO of unusual or unsuitable soil conditions when they are encountered.

D. Sediment control measures shall be in place prior to the start of any earth moving.

E. The stockpile perimeter shall be protected with proper stormwater, erosion, and silt migration protection as per ODOT Items 207 and 670 specifications.

F. Backfill material shall be placed in 8-inch maximum loose lifts and each lift compacted in accordance with the table in Article 3.3, Paragraph J.

G. Cut trenches sufficiently wide to enable installation and allow inspection in accordance with 29 CFR 1926.650, Subpart P.

H. Remove lumped subsoil, boulders, and rock up to 1/3 cubic yard, measured by volume.

I. Correct areas overexcavated with Fill Type S1 or S2 material and compact to density equal to or greater than requirements for subsequent backfill material, at no additional cost to FERMCO.

J. Correct unauthorized excavation at no cost to FERMCO.

K. Verify that survey benchmark and intended elevations for the work are as indicated.

L. Filling and Backfilling
   1. Backfill areas to contours and elevations shown. Backfill trenches to final elevations. Use unfrozen and unsaturated materials.
   2. Granular Fill Type A3: Place and compact materials in continuous layers not exceeding 8 inches loose lift.
   3. Soil Fill Type S1 or S2: Place and compact material in continuous layers not exceeding 8 inches loose lift.

4. Maintain optimum moisture content (within ±3 percent) of fill materials to attain required compaction density of 95 percent of maximum dry density as determined by ASTM D698 (Standard Proctor density).
5. Backfill systematically as early as possible to allow maximum time for natural settlement. Do not backfill over porous, wet, frozen, or spongy/unsuitable subgrade surfaces.
6. Unsatisfactory substrate:
   a. Where unsatisfactory subsurface conditions (whether existing or in area of backfill) are observed, excavate unsatisfactory material to satisfactory substrate as approved by FERMCO.
   b. Backfill with fill material required for specific area. Compact to density required for the area.
7. Employ a placement method so as not to disturb or damage foundations or utilities in trenches.

M. Clean up and restore areas disturbed by and during construction operations and/or occupied by Subcontractor's temporary facilities.

N. Excess debris, waste generated, and contaminated material encountered as a result of the work shall be containerized by the Subcontractor as described in Part 6, Statement of Work, of the Invitation for Bid.

O. Dust Control: Provide dust control using potable water.

P. Dewatering:
1. Should dewatering be required, a written plan of drainage procedures shall be submitted to FERMCO for approval.
2. Dewatering shall be achieved by gravity or by pumps. All methods shall be of sufficient capacity to keep excavations/trenches sufficiently dewatered.

Q. Topsoil Excavation:

1. Excavate topsoil and stockpile clean topsoil in the area designated by FERMCO.
2. Protect stockpile from erosion. Refer to Section 02270 for erosion control measures.

R. Trenching:

1. Cut trenches sufficiently wide to enable installation of utilities and allow inspection.
2. Hand-trim excavation and leave free of loose matter.
3. Support pipe during placement and compaction of bedding fill.
4. Backfill trenches to required contours and elevations.
5. Install trace wire as indicated in Section 02667.

S. Placing Topsoil:

1. Clean up and restore areas disturbed by and during construction operations and/or occupied by the Contractor's temporary facilities. Place a minimum of a 4 inches of compacted topsoil on all such areas prior to final acceptance of the project by FERMCO.
2. Prepare subsoil to eliminate uneven areas and low spots. Maintain lines, levels, profiles, and contours. Make changes in grade gradual. Blend slope into level areas.
3. Remove large stones, roots, grass, weeds, debris, and foreign material while spreading.
4. Roll placed topsoil.
5. Leave stockpile area and site clean, raked, and with positive drainage, ready to be seeded.

T. Material Stockpiles:

1. Stockpile materials on site at a location designated by FERMCO.
2. Separate differing materials with dividers, or stockpile apart to prevent mixing.
3. Direct surface water away from stockpile site to prevent erosion or deterioration of materials. Prevent silt migration at the stockpile perimeter.

4. Provide stormwater runoff controls at pile to prevent settlement from leaving stockpile area.

3.3 QUALITY CONTROL

A. The Subcontractor shall coordinate and pay for all field quality control related to soils compaction testing.

B. Laboratory Tests: The following laboratory tests shall be completed for each sample of soil materials of each type of soil to be used for fill. A sample shall be obtained each time a change in appearance of the fill material is noted by FERMCO.
   1. Grain-size analysis in accordance with ASTM D422.
   2. Moisture-density relations of soils in accordance with ASTM D698.
   3. Liquid-limit, plastic-limit, and plasticity-index in accordance with ASTM D4318.

C. Frequency of Tests:
   1. Frequency of in-place density testing performed in accordance with ASTM D1556, ASTM D1557, ASTM D2922, or ASTM D3017 shall be whichever of the following requires the greatest number of tests.
      a. Once each day of work of filling and backfilling.
      b. Once every layer of fill.
      c. Once every 100 cubic yards of fill.
      d. Once every 20 cubic yards of backfilling.
      e. Every 1,000 square feet under gravel pad and concrete.

D. Compaction testing will be performed in accordance with ASTM C136, ASTM D1556, ASTM D1557, ASTM D698, ASTM D2922, and ASTM D3017.

E. If tests indicate that work does not meet specified requirements, remove work, replace, compact, and retest.

F. If, during the course of the project a source of supply is changed or FERMCO determines that the

450

characteristics of the materials change or have varied, then the applicable testing shall be repeated.

G. All inspection and field test reports shall be filed with FERMCO within 7 days after fill has been compacted and tested.

H. The Subcontractor shall notify FERMCO of testing/inspection activities at least 24 hours prior to the start of all tests or inspections.

I. Tolerances
   1. Grading and Filling: ±1 inch of indicated finish subgrade.

J. Compaction Requirements
   1. Minimum Compaction Requirement:

Location	Required Compaction
Under concrete slabs, footings, trenches, fill, and all others	95 percent Standard Proctor (ASTM D698)

K. Proof Rolling: The existing subgrade that is to receive structural fill shall be proof rolled to identify soft areas. Proof rolling shall be by pneumatic-tired vehicle with a minimum loaded weight of 20 tons.

3.4 CLEANING

A. Leave the site in a condition suitable for final grading, surfacing, or stabilization.

END OF SECTION

SECTION 02270
EROSION CONTROL

PART 1 GENERAL

1.1 SECTION INCLUDES

A. Soil erosion and sedimentation control for areas of the Subcontractor's work area which are graded or disturbed as a part of the contract work.

B. Maintenance and removal of all temporary erosion control facilities.

1.2 RELATED SECTIONS

A. Section 01010 - General Requirements.

B. Section 01011 - Submittals.

C. Section 02110 - Site Clearing.

D. Section 02200 - Earthwork.

E. Section 02900 - Soil Preparation and Seeding.

1.3 REFERENCE DRAWINGS

A. See Section 01012 for the Schedule of Drawings.

1.4 REFERENCES

A. State of Ohio, Department of Transportation (ODOT):
1. Construction and Material Specifications, January 1, 1995. Except as supplemented or otherwise modified herein and/or shown on the construction drawings, the entire work under this section shall be in compliance with the provisions of ODOT.
2. Standard Construction Drawings.

B. Occupational Safety and Health Administration (OSHA):
1. 29 CFR 1910.1200 Hazard Communication Standard.

1.5 SYSTEM DESCRIPTION

A. The Subcontractor shall have full responsibility for construction, maintenance, and removal of temporary erosion control measures.

B. Items to be protected from sedimentation deposits shall include (but shall not be limited to) all downstream property, natural waterways, streams, lakes, ponds, catch basins, drainage ditches, roads, gutters, and natural buffer zones.

1.6 SUBMITTALS

A. Provide submittals as required by Section 01011.

B. Material Safety Data Sheet (MSDS): MSDSs shall be submitted to FERMCO Industrial Hygiene (IH) for any chemical compound or material used on the project. MSDSs shall be submitted at least 2 to 3 weeks in advance to FERMCO IH for review prior to the chemical compound or material arriving on site. The listing of hazardous chemicals/materials present, labeling of containers, and employee training and protective measure programs shall be in accordance with 29 CFR 1910.1200 (Hazard Communication Standard).

C. Prior to the placement of debris into containers, the Subcontractor shall submit a detailed waste handling plan in accordance with the Subcontract, Part 6, Scope of Work for approval by FERMCO and FERMCO Quality Assurance.

1.7 QUALITY ASSURANCE PROGRAM

A. Subcontractor shall inspect sediment control measures periodically and after each rain exceeding 0.25 inches to evaluate the effectiveness of the control measures.

1.8 DELIVERY, STORAGE, AND HANDLING

A. Store materials in a dry area, free from wetting and physical damage.

PART 2 PRODUCTS

2.1 MATERIALS

A. Bales: Hay or straw bales shall be reasonably free of weed seed and such foreign materials as may detract from their effectiveness or be injurious to desired plant growth.

B. String: Jute twine.

C. Stakes: Stakes shall meet requirements of ODOT Standard Construction Drawing MC-11.

D. Riprap: Riprap shall meet the requirements of ODOT 601.04.

E. Filter Fabric: Spunbound 7.5 oz/sy.

PART 3 EXECUTION

3.1 FIELD CONDITIONS

A. Protective Measures

1. Construct protective devices as specified herein, and as required on the Contract Drawings.
2. Berms and Diversion Ditches: Miscellaneous berms and diversion ditches shall be provided to protect sloping areas from erosion.
   a. Locate to direct runoff as required. Size to prevent overflowing.
   b. Utilize hay-bale check-dams to filter out the suspended matter, as required.
   c. Filter fabric shall be placed under all riprap (stone apron).
3. Silt Barriers: Conform to requirements on the construction drawings.
4. Stockpile areas for soil materials shall also be protected from erosion within 30 days.
5. Prior to any earth moving as specified in Section 02200 of this specification package, straw bales shall be installed around the perimeter of the work zone and around existing catch basins.

3.2 QUALITY CONTROL

A. The Subcontractor shall clean out, maintain, and adjust sediment control measures as directed by FERMCO to prevent sediment from leaving the work zone.

3.3 ADJUSTING

A. Removal of Sedimentation Accumulation

1. Remove accumulated sediments, debris, and obstructions as necessary. In no case shall sediment build up to a depth greater than 1/2 the height of the protective device. Respread on site in a manner not to adversely affect protective procedures and consistent with site regulations, Subcontract, Part 6, Scope of Work.

B. Removal of Temporary Erosion Control Facilities

1. Erosion control facilities shall be removed at the direction of FERMCO after the disturbed areas are stabilized with grass or rock.

3.4 CLEANING

A. Remove and manage debris and excess materials in accordance with the Subcontract, Part 6, Scope of Work.

3.5 PROTECTION

A. Utilities

1. Existing underground utilities shall be identified and marked by the Subcontractor prior to any work in the contract area.
2. Existing catch basins and drains are to be protected by sediment control measures prior to any earth work.

END OF SECTION

SECTION 02300
BORING AND JACKING

PART 1 GENERAL

1.1 SECTION INCLUDES

A. Installation of stormwater pipeline and fire water pipeline underneath railroad tracks.

B. Rock Excavation: The removal of materials classified as rock and the disposal of the excavated material in conformity with the lines, grades, and dimensions shown on the construction drawings. Under this section only, rock is classified as hard material in place that cannot be excavated by pneumatic, hydraulic, or hand tools. Material classified as rock shall be removed by other suitable means. Use of explosives is prohibited.

C. Backfill: Excavated material or other earth materials required to fill excavated pits. Backfill shall be placed and compacted to the same density as the surrounding soil. Backfilling of pits shall be brought to the lines and grade existing before excavation.

D. Shoring: A structure, such as a metal hydraulic, mechanical, or timber shoring system, which supports the sides of an excavation and is designed to prevent cave-ins.

1.2 RELATED SECTIONS

A. Section 01010 - General Requirements.

B. Section 01011 - Submittals.

C. Section 02200 - Earthwork.

D. Section 02270 - Erosion Control.

1.3 REFERENCE DRAWINGS

A. See Section 01012 for the Schedule of Drawings.

1.4 REFERENCES

A. American Society for Testing and Materials (ASTM), Annual Book of Standards:

1. ASTM A139-90 — Standard Specifications for Electric-Fusion (Arc)-Welded Steel Pipe (NPS 4 and Over).

B. Occupational Health and Safety Administration (OSHA), Code of Federal Regulations 29 CFR 1926, Subpart P - Excavations, 1989.

1.5 SYSTEM DESCRIPTION

A. This section involves work which requires earthwork, excavation, hauling, stockpiling, backfilling, and compaction relating to the boring and jacking for stormwater pipeline and fire water pipelines.

B. Definitions:

1. Utility: Any buried pipe, conduit, or cable.

1.6 SUBMITTALS

A. Provide submittals as required by Section 01011.

1.7 SEQUENCING/SCHEDULING

A. The Contractor shall coordinate and schedule boring and jacking operations concurrently with installation of stormwater pipeline and fire water pipeline.

PART 2 PRODUCTS

2.1 MATERIALS

A. Boring and Jacking:

1. Steel casing pipe shall have diameter sufficient to accommodate pipes as specified on the construction drawings. Steel casing pipe shall be spiral or straight seam welded steel pipe conforming to ASTM A139, Grade B, with a minimum wall thickness of 0.312 inches.

457

PART 3 EXECUTION

3.1 FIELD CONDITIONS

A. Before excavation begins, provide erosion and sediment control to minimize erosion and the transport of sediment beyond the limits of the Contractor's work area. Methods of control shall conform to Section 02270.

B. Location of underground utilities based on information provided by the Facilities Manager. Contractor shall be aware that utilities may exist which are not shown on the construction drawings. Contractor shall verify location of all utilities before construction.

3.2 ERECTION/INSTALLATION/APPLICATION

A. Excavate boring and receiving pits to the width, length, and depth necessary for boring and jacking operations.

B. Pits shall be located a minimum of 2 feet beyond toe-of-slopes, and a minimum of 3 feet beyond far bank of ditches or swales.

C. Materials excavated from pits shall be stockpiled in areas designated by FERMCO, and in accordance with OSHA 29 CFR 1926, Subpart P - Excavations. Excavated materials or equipment shall not be placed on pavement or shoulders of roadway.

D. Boring and jacking operations shall begin immediately after excavation of the pits has been completed.

E. Bored installations shall be a bored-hole diameter essentially the same as the outside diameter of the casing pipe to be installed.

F. Casing pipe shall be jacked into boring as soon as possible after boring is made. Lengths of casing pipe as long as practical shall be used. Joints between sections of casing pipe shall be welded as recommended for joining the particular type of pipe.

G. Care shall be taken to ensure that casing pipe installed by boring and jacking is at the proper alignment and grade.

H. Boring, jacking, or driving casing pipe under existing railway shall be accomplished without jetting, sluicing, or wetboring.

I. After casing pipe is installed, the carrier pipes shall be installed in such a manner as to protect coating, lining, and joint integrity. Each carrier pipe shall be placed in proper horizontal and vertical alignment using wooden blocking/wedges or prefabricated pipe collars spaced radially around pipe and secured firmly in place. Blocking or collars shall be installed around the pipes such that joints do not touch. Spacing of blocking or collars shall be no greater than 10 feet on center longitudinally in casing pipe.

J. Promptly backfill excavated pits as directed by FERMCO. Backfill materials shall be placed in 6-inch layers and tamped. Backfilling of pits shall be brought to the lines and grade existing before excavation in accordance with Section 02200.

K. Excavated material not used as backfill for pits shall be disposed of in areas designated by FERMCO.

3.2 PROTECTION

A. Protect excavation by shoring, bracing, sheet piling, underpinning, or other methods required to prevent cave-in of loose soil into excavation. Protection shall be in accordance with OSHA 29 CFR 1926, Subpart P - Excavations.

3.3 CLEANING

A. Leave the site in a condition suitable for final grading, surfacing, or stabilization.

END OF SECTION

SECTION 02667
SITE WATER LINES

PART 1 GENERAL

1.1 SECTION INCLUDES

A. Pipe, fittings, and accessories for underground fire water line.

B. Valves, valve boxes, fire hydrants, and pipe detector tape.

C. Testing and reporting results.

D. Insulation.

1.2 RELATED SECTIONS

A. Section 01010 - General Requirements.

B. Section 01011 - Submittals

C. Section 02200 - Earthwork.

1.3 REFERENCE DRAWINGS

A. See Section 01012 for the Schedule of Drawings.

1.4 REFERENCES

A. American Water Works Association (AWWA):

1. AWWA C105/A21.5-93 Polyethylene Encasement for Ductile Iron Pipe Systems.
2. AWWA C111/A21.11-90 Rubber-Gasket Joints for Ductile Iron and Grey-Iron Pressure Pipe and Fittings.
3. AWWA C151/A21.51-91 Ductile-Iron Pipe, Centrifugally Cast, for Water or Other Liquids.
4. AWWA C500-93 Metal-Seated Gate Valves for Water Supply Service.

5. AWWA C600-93 — Installation of Ductile-Iron Water Mains and Their Appurtenances.

6. AWWA C906-90 — Polyethylene (PE) Pressure Pipe and Fittings, 4-inch through 63-inch, for Water Distribution.

7. AWWA C502-85 — Dry Barrel Fire Hydrant

B. American Society for Testing and Materials (ASTM):

1. ASTM D3035-93 — Standard Specification for Polyethylene (PE) Plastic Pipe (DR-PR) Based on Controlled Outside Diameter.

2. ASTM A53-95 — Standard specification for pipe, steel, black and hot-dipped, zinc-coated welded and seamless.

C. American Concrete Institute (ACI):

1. ACI 318/318R Rev. 92 — Building Code Requirements for Reinforced Concrete.

D. Underwriters Laboratories, Inc. (UL):

1. UL246 — UL standards for safety hydrants for Fire Protection Service, Seventh Edition.

E. National Fire Protection Association (NFPA):

1. NFPA 24-95 — Standard for the Installation of Private Fire Mains and the Appurtenances.

1.5 SUBMITTALS

A. Submittals shall be in accordance with Section 01011.

1.6 QUALITY ASSURANCE PROGRAM

A. Piping and Valves: Manufacturer's name and pressure rating marked on valve body and pipe.

B. The Subcontractor shall arrange and pay for an as-built survey of as-completed conditions (showing locations of

PIVs, fire hydrants, pipe sizes, bends, and top of pipe elevations). An as-built site, utility, and grading plan shall be submitted to FERMCO.

1.7 DELIVERY, STORAGE, AND HANDLING

A. Deliver, store, protect, and handle products to site.

B. Deliver and store valves in shipping containers with labeling in place.

PART 2 PRODUCTS

2.1 MATERIALS

A. Pipe

1. Ductile Iron Pipe: AWWA C151.
   a. Fittings: Ductile iron, standard thickness.
   b. Joints: AWWA C111, push-on, rubber gasket.
   c. Jackets: AWWA C105, polyethylene encasement.
   d. Material Class 55 ductile iron, cement lined.
   e. For wet tap, use either dual compression seal tapping sleeve or mechanical joint tapping sleeve.
   f. For dry tap, use a mechanical joint cutting-in sleeve and tapped tee.
2. High-Density Polyethylene (HDPE) Pipe: AWWA C906 (PE 3408), ASTM D3035, SDR 9 for 200 psi pressure rating.
   a. Fittings: AWWA C906.
   b. Joints: Butt fusion, flanged gasket joints at interface connections with ductile iron pipe, water hydrants, and valves.
   c. Trace Wire: Magnetically detectable conductor, brightly colored plastic covering, with "Water Service" imprinted in large letters.
3. Carbon steel pipe: Seamless carbon steel, ASTM A53 Grade B, standard weight.

B. Gate Valves

1. AWWA C500, iron body, bronze trim, nonrising stem with square nut, single wedge, Class 125, flanged

ends, control rod, post indicator, or extension box and valve key.

C. Post Indicator Valves: Post Indicating Valves Assembly - UL listed and FM approved.

1. Sizes 4 inches - 14 inches, AWWA C500 gate valves, flanged ends Class 150, post assembly shall show open and shut, handcrank operator above ground, non-rising stem, and break-flange to separate the top works without removing the valve from the line.

D. Hydrant:

1. Hydrant: AWWA C502, UL 246, dry barrel type, inside dimension of 7 inches minimum, with minimum 5-1/4 inches diameter valve seat opening; 6-inch flanged joint inlet connection with accessories, gland bolts, and gaskets to match pipe.
2. Hydrant Extensions: Fabricate in multiples of 6 inches with rod and coupling to increase barrel length.
3. Hose and Streamer Connection: Match sizes with FERMCO standard, two hose nozzles, one pumper nozzle.
4. Finish: Primer and two coats of enamel. Color to be orange body with green cap and top.

E. Bedding Materials

1. Bedding: Fill Type A3, sand as specified in Section 02200.

2.2 ACCESSORIES

A. Concrete: Conforming to ACI 318, with a 28-day average compression strength of 3,000 psi.

B. Valve Box: To fit over gate valves. Adjustable height. Cast iron or post indicator type.

PART 3 EXECUTION

3.1 EXAMINATION

A. Provide field survey services to lay out all utilities and facilities. Establish two permanent benchmarks on site, referenced to established control points. Record locations of utilities and facilities, with horizontal and vertical data, on project record documents.

B. Verify that service connection and water main size, location, and invert are as indicated.

C. Verify interface connections between HDPE flanges and ductile iron pipe/valves.

D. For dry tap, determine extent of outage required to isolate the main. Notify all affected facility owners of the expected outage, and make preparations to provide alternate water service to critical activities, as required.

E. The above-grade portion of the force main at the Biodenitrification Surge Lagoon shall be insulated as follows:

1. Insulation shall be cellular glass, with a minimum thickness of 1-1/2 inches and a maximum "k" value of 0.345 (BTU-in)/(h-ft2-degree F) at 75 degrees F. Insulation shall be secured with 1/2 inches stainless steel bands on 12-inch centers.
2. Aboveground jacketing shall be 0.02-inch-thick embossed aluminum. Jacketing shall be installed with number 8, 1/2-inch stainless steel screws on 3-inch centers.
3. Underground jacketing shall be a wrapping totaling 40 mils thick of polymer modified bituminous compound with a 4-mil high-density cross laminate polyethylene top film and release paper backing.
4. All seams shall be lapped against the weather. Insulation shall be finished at supports, protrusions, and interruptions. At pipe supports, only enough insulation shall be removed to provide a snug fit.

5. Aboveground pipe shall be seamless carbon steel, ASTM A53 Grade B, Schedule 40, welded.
6. Insulated and heat-traced pipe shall extend for a minimum of 3 feet below grade.

3.2 PREPARATION

A. Insulation shall be cellular glass, with a minimum thickness of 1-1/2 inches and a maximum "k" value of 0.345 (BTU-in)/(h-ft2-degree f) at 75 degrees F. Insulation shall be secured with 1/2 inches stainless steel bands on 12-inch centers.

B. Remove scale and dirt, on inside and outside, before assembly.

C. Prepare for assembly of pipe connections to equipment with flanges or unions.

3.3 ERECTION/INSTALLATION/APPLICATION

A. Bedding
1. Excavate pipe trench in accordance with Section 02200 and AWWA C600 for work of this section. Hand-trim excavation for accurate placement of pipe to elevations indicated.
2. Place bedding material at trench bottom; level fill materials in one continuous layer not exceeding 6 inches compacted depth; compact per Section 02200.
3. Backfill around sides and to top of pipe with fill, tamped in place and compacted per Section 02200.
4. Maintain optimum moisture content of bedding material to attain required compaction density.

B. Installation - Pipe
1. Install pipe to indicated elevation to within tolerance of 5/8 inch. Make a wet tap into existing water line, or shut off water supply to the subject line and install cutting-in sleeve and tapped tee (dry tap). If a dry tap is performed,

flush and pressure test the new fire main before restoring service.

2. Install ductile iron piping and fittings in accordance with AWWA C600.
3. Route pipe in a straight line.
4. Install pipe to allow for expansion and contraction without stressing pipe or joints.
5. Install access fittings to permit disinfection of water system and pressure testing.
6. Form and place concrete for thrust blocks at each elbow or change of direction of pipe main.
7. Establish elevations of buried piping to ensure not less than 3.5 feet of cover.
8. Backfill trench in accordance with Section 02200.
9. Install HDPE piping in accordance with AWWA C906. Install magnetic trace wire continuously over pipe.

C. Installation - Valves
1. Set valves and/or post indicator on solid bearing.
2. Center and plumb valve box over valve, if required.

3.4 QUALITY CONTROL

A. Field inspection will be performed by supplier and witnessed by FERMCO.

B. The new fire protection pipe shall be hydrostatically tested in accordance with NFPA 24 and the new force main shall be tested in accordance with AWWA 6600 prior to tie-in.
1. This test shall be run to not less than 200 psi pressure for 2 hours.
2. The amount of leakage in piping shall be measured at the specified test pressure by pumping from a calibrated container. The amount of leakage at the joints shall not exceed 2 quarts per hour per 100 joints irrespective of pipe diameter.
3. The amount of allowable leakage shall be permitted to increase by 1 fluid ounce per inch valve diameter per hour for each metal seated valve isolating the test section. If fire hydrants are

to be tested with the main valve open, so that the hydrants are under pressure, an additional 5 ounces per minute leakage will be permitted for each hydrant.

4. Test shall be made by the contractor in the presence of the authority having jurisdiction or the representative of the owner. NFPA 24 Contractor's Material and Test Certificate for Private Fire Service Main shall be completed (see forms attached).

5. Additives, corrosive chemicals such as sodium silicate, brine, or other chemicals shall not be used for stopping leaks or while hydrostatically testing system.

C. Compaction testing will be performed in accordance with Section 02200.

D. If tests indicate work does not meet specified requirements, remove work, replace, and retest at no cost to Owner.

END OF SECTION

467

ATTACHMENT 1

Contractor's Material and Test Certificate for Private Fire Service Mains

PROCEDURE

Upon completion of work, inspection and tests shall be made by the contractor's representative and witnessed by an owner's representative. All defects shall be corrected and system left in service before contractor's personnel finally leave the job.

A certificate shall be filled out and signed by both representatives. Copies shall be prepared for approving authorities, owners, and contractor. It is understood the owner's representative's signature in no way prejudices any claim against contractor for faulty material, poor workmanship, or failure to comply with approving authority's requirements or local ordinances.

PROPERTY NAME		DATE	
PROPERTY ADDRESS			
PLANS	ACCEPTED BY APPROVING AUTHORITIES (NAMES)		
	ADDRESS		
	INSTALLATION CONFORMS TO ACCEPTED PLANS	☐ YES	☐ NO
	EQUIPMENT USED IS APPROVED IF NO, STATE DEVIATIONS	☐ YES	☐ NO
INSTRUCTIONS	HAS PERSON IN CHARGE OF FIRE EQUIPMENT BEEN INSTRUCTED AS TO LOCATION OF CONTROL VALVES AND CARE AND MAINTENANCE OF THIS NEW EQUIPMENT? IF NO, EXPLAIN	☐ YES	☐ NO
	HAVE COPIES OF APPROPRIATE INSTRUCTIONS AND CARE AND MAINTENANCE CHARTS BEEN LEFT ON PREMISES? IF NO, EXPLAIN	☐ YES	☐ NO
LOCATION	SUPPLIES BUILDINGS		
PIPES AND JOINTS	PIPE TYPES AND CLASS	TYPE JOINT	
	PIPE CONFORMS TO _____ STANDARD FITTINGS CONFORM TO _____ STANDARD IF NO, EXPLAIN	☐ YES ☐ YES	☐ NO ☐ NO
	BURIED JOINTS NEEDING ANCHORAGE CLAMPED, STRAPPED, OR BLOCKED IN ACCORDANCE WITH _____ STANDARD IF NO, EXPLAIN	☐ YES	☐ NO
TEST DESCRIPTION	FLUSHING: Flow the required rate until water is clear as indicated by no collection of foreign material in burlap bags at outlets such as hydrants and blow-offs. Flush at flows not less than 390 GPM (1476 L/min) for 4-inch pipe, 610 GPM (2309 L/min) for 5-inch pipe, 880 GPM (3331 L/min) for 6-inch pipe, 1560 GPM (5905 L/min) for 8-inch pipe, 2440 GPM (9235 L/min) for 10-inch pipe, and 3520 GPM (13323 L/min) for 12-inch pipe. When supply cannot produce stipulated flow rates, obtain maximum available. HYDROSTATIC: Hydrostatic tests shall be made at not less than 200 psi (13.8 bars) for two hours or 50 psi (3.4 bars) above static pressure in excess of 150 psi (10.3 bars) for two hours. LEAKAGE: New pipe laid with rubber gasketed joints shall, if the workmanship is satisfactory, have little or no leakage at the joints. The amount of leakage at the joints shall not exceed 2 qts. per hr. (1.89 L/h) per 100 joints irrespective of pipe diameter. The amount of allowable leakage specified above may be increased by 1 fl oz per in. valve diameter per hr. (30 mL/25 mm/h) for each metal seated valve isolating the test section. If dry barrel hydrants are tested with the main valve open, so the hydrants are under pressure, an additional 5 oz per minute (150 mL/min) leakage is permitted for each hydrant.		
FLUSHING TESTS	NEW PIPING FLUSHED ACCORDING TO _____ STANDARD BY (COMPANY) IF NO, EXPLAIN	☐ YES	☐ NO
	HOW FLUSHING FLOW WAS OBTAINED ☐ PUBLIC WATER ☐ TANK OR RESERVOIR ☐ FIRE PUMP	THROUGH WHAT TYPE OPENING ☐ HYDRANT BUTT	☐ OPEN PIPE
	LEAD-INS FLUSHED ACCORDING TO _____ STANDARD BY (COMPANY) IF NO, EXPLAIN	☐ YES	☐ NO
	HOW FLUSHING FLOW WAS OBTAINED ☐ PUBLIC WATER ☐ TANK OR RESERVOIR ☐ FIRE PUMP	THROUGH WHAT TYPE OPENING ☐ Y CONN. TO FLANGE & SPIGOT	☐ OPEN PIPE

Figure A-9-2.1 Typical contractor's material and test certificate for private fire service mains (continued on next page).

HYDROSTATIC TEST	ALL NEW PIPING HYDROSTATICALLY TESTED AT _____ PSI FOR _____ HOURS		BURIED JOINTS COVERED ☐ YES ☐ NO
LEAKAGE TEST	TOTAL AMOUNT OF LEAKAGE MEASURED _____ GALS.	NO LEAKAGE ALLOWED FOR VISIBLE JOINTS _____ HOURS	
	ALLOWABLE LEAKAGE (BURIED) _____ GALS.	NO LEAKAGE ALLOWED FOR VISIBLE JOINTS _____ HOURS	
HYDRANTS	NUMBER INSTALLED	TYPE AND MAKE	ALL OPERATE SATISFACTORILY ☐ YES ☐ NO
CONTROL VALVES	WATER CONTROL VALVES LEFT WIDE OPEN IF NO, STATE REASON		☐ YES ☐ NO
	HOSE THREADS OF FIRE DEPARTMENT CONNECTIONS AND HYDRANTS INTERCHANGEABLE WITH THOSE OF FIRE DEPARTMENT ANSWERING ALARM		☐ YES ☐ NO
REMARKS	DATE LEFT IN SERVICE _____ ADDITIONAL COMMENTS: _____		
SIGNATURES	NAME OF INSTALLING CONTRACTOR		
	TESTS WITNESSED BY		
	FOR PROPERTY OWNER (SIGNED)	TITLE	DATE
	FOR INSTALLING CONTRACTOR (SIGNED)	TITLE	DATE
ADDITIONAL EXPLANATION AND NOTES			

Figure A-9-2.1 Typical contractor's material and test certificate for private fire service mains (continued).

Appendix B Referenced Publications

B-1 The following documents or portions thereof are referenced within this standard for informational purposes only and thus are not considered part of the requirements of this document. The edition indicated for each reference is the current edition as of the date of the NFPA issuance of this document.

B-1.1 NFPA Publications. National Fire Protection Association, 1 Batterymarch Park, P.O. Box 9101, Quincy, MA 02269-9101.

NFPA 13, *Standard for the Installation of Sprinkler Systems*, 1994 edition.

NFPA 13E, *Guide for Fire Department Operations in Properties Protected by Sprinkler and Standpipe Systems*, 1995 edition.

NFPA 20, *Standard for the Installation of Centrifugal Fire Pumps*, 1993 edition.

NFPA 22, *Standard for Water Tanks for Private Fire Protection*, 1993 edition.

NFPA 72, *National Fire Alarm Code*, 1993 edition.

NFPA 1962, *Standard for the Care, Use, and Service Testing of Fire Hose Including Couplings and Nozzles*, 1993 edition.

B-1.1.1 The following NFPA publications contain additional information relevant to this standard:

NFPA 11, *Standard for Low Expansion Foam*, 1994 edition.

NFPA 14, *Standard for the Installation of Standpipe and Hose Systems*, 1993 edition.

NFPA 15, *Standard for Water Spray Fixed Systems for Fire Protection*, 1990 edition.

NFPA 16, *Standard for the Installation of Deluge Foam-Water Sprinkler and Foam-Water Spray Systems*, 1995 edition.

NFPA 1963, *Standard for Fire Hose Connections*, 1993 edition.

B-1.2 ACPA Publication. American Concrete Pipe Association, 8320 Old Courthouse Road, Vienna, VA 20005.

Concrete Pipe Handbook.

B-1.3 ANSI Publication. American National Standards Institute, 11 West 42nd Street, New York, NY 10036.

ANSI B16.1, *Cast-Iron Pipe Flanges and Flanged Fittings for 25, 125, 250 and 800 lb*, 1989.

B-1.4 ASTM Publications. American Society for Testing and Materials, 1916 Race Street, Philadelphia, PA 19103.

ASTM A126, *Specification for Gray Iron Castings for Valves, Flanges and Pipe Fittings*, 1993.

ASTM A197, *Specification for Cupola Malleable Iron*, 1987.

ASTM A307, *Specification for Carbon Steel Bolts and Studs, 60,000 psi Tensile Strength*, 1994.

SECTION 02713
DETENTION POND LINER GEOMEMBRANE

PART 1 GENERAL

1.1 SECTION INCLUDES

A. Geomembrane materials, manufacture, fabrication, and installation of a stormwater detention pond geomembrane liner.

B. Geotextile rub sheet is specified on the drawings.

C. Use of geosynthetics for erosion control is specified in Section 02270.

1.2 RELATED SECTIONS

A. Section 01010 - General Requirements.

B. Section 01011 - Submittals

1.3 REFERENCE DRAWINGS

A. See Section 01012 for the Schedule of Drawings.

1.4 REFERENCES

A. American Society for Testing and Materials (ASTM):

1. ASTM D638-91 — Standard Test Method for Tensile Properties of Plastics.
2. ASTM D746-79 — Standard Test Method for Brittleness Temperature of Plastics and Elastomers by Impact.
3. ASTM D1004-90 — Standard Test Method for Initial Tear Resistance of Plastic Film and Sheeting.
4. ASTM D1204-84 — Standard Test Method for Linear Dimensional Changes of Nonrigid Thermoplastic

		Sheeting or Film at Elevated Temperatures.
5.	ASTM D1505 E1-85	Standard Test Method for Density of Plastics by the Density-Gradient Technique.
6.	ASTM D4437-84	Practice for Determining the Integrity of Field Seams Used in Joining Flexible Polymeric Sheet Geomembranes.

B. Federal Test Method Standard (FTMS):

1.	FTMS 101B-71	Method 2065, Puncture Resistance and Elongation Test.

C. United States Environmental Protection Agency (US EPA):

1.	US EPA Technical Guidance Document EPA/600/2-88/052	Lining of Waste Containment and Other Impoundment Facilities, 1988.
2.	US EPA Technical Guidance Document EPA/530/SW-91/051	Inspection Techniques for the Fabrication of Geomembrane Field Seams, May 1991.

D. Geosynthetics Research Institute (GRI):

1.	GRI Test Method GM6	Standard Practice for Pressurized Air Channel Test for Dual Seamed Geomembranes, latest revision.

E. National Sanitation Foundation (NSF):

1.	Standard Number 54-93	Flexible Membrane Liners.

1.5 DEFINITIONS OF TERMS

A. Manufacturer: The manufacturer is the firm or corporation responsible for production of the geomembrane material to be used in the project. The manufacturer is responsible for the condition of the geomembrane until the material is accepted by the Construction Manager or his/her field representative upon delivery. The manufacturer shall produce a consistent product meeting the project specifications

and shall provide quality control documentation for the product specified herein.

B. Liner Subcontractor: The Liner Subcontractor is the firm responsible for installation of the geomembrane. The Liner Subcontractor shall be the manufacturer or an approved installed trained and certified to install the manufacturer's geomembrane. The Liner Subcontractor shall provide an Installation Supervisor responsible for the field crew.

C. Film Tear Bond (FTB): A failure in the ductile mode of one of the bonded sheets by testing prior to complete separation to the bonded area as depicted in US EPA Technical Guidance Document EPA/600/2-88/052. A seam shall be classified as a FTB if no greater than 10 percent of the seam width peels (separates) at any point.

D. Geomembrane: A synthetic lining material, also referred to as a flexible membrane liner (FML).

1.6 QUALITY ASSURANCE PROGRAM

A. A laboratory shall be maintained by the manufacturer of the geomembrane materials at the point of manufacture to ensure quality control in accordance with ASTM testing procedures (referenced in Section 1.4). That laboratory shall maintain records of its quality control results and provide to FERMCO, prior to shipment, a Certificate of Compliance stating that all rolls of geomembrane material supplied are in compliance with specification physical properties requirements.

B. The certificate shall include the name of the manufacturer, chemical composition, product description, statement of compliance to specification physical properties requirements, and the signature of authorized official attesting to the information required.

C. Testing of factory fabricated seams for geomembrane shall be performed by the manufacturer. The manufacturer shall inspect and test 100 percent of factory fabricated seams in accordance with these specifications.

D. Testing of geomembrane materials during construction will be performed by FERMCO.

E. Geomembrane shall be randomly sampled and tested in accordance with the manufacturer's approved QC manual. Samples not meeting the minimum requirements specified shall result in the rejection of the applicable sheets.

F. The Liner Subcontractor shall have installed a minimum of 1 million ft^2 of High-Density Polyethylene (HDPE) geomembrane.

G. The Installation Supervisor shall have demonstrated experience in installing and seaming of a minimum of 500,000 ft^2 of HDPE geomembrane liner systems for similar applications. The Installation Supervisor shall remain on site and be responsible for the liner layout, seaming, patching, repairs, testing coordination with FERMCO, and all other activities associated with installation of the geomembrane.

1.7 SUBMITTALS

A. Provide submittals as required by Section 01011.

B. The Subcontractor shall submit samples of the proposed geomembrane.

C. Submit a Certificate of Compliance from the manufacturer in accordance with Division 1 for the geomembrane material.

D. Submit quality control certificates issued by the producer of the raw materials used to manufacture the geomembrane. These certificates shall include the following.

1. Origin, identification, and production plant location of the resin used to manufacture the geomembrane.
2. Reports of testing conducted to verify the quality of the resin including the stabilization compounds used to manufacture the geomembrane, with signature of authorized official. Properties testing typically performed by the resin manufacturer shall be included in the reports.

E. Shop Drawings: Submit shop drawings showing proposed geomembrane panel layout, panel size, shop and field seams, and location of test coupons. The drawings shall include number or letter or panels and cross-reference surrounding panels, details of seaming the geomembrane, connections, penetrations, pipe boot fabrication, and other construction related details. Shop drawings shall be prepared in accordance with Division 1.

F. Submit as-built drawings showing geomembrane panel layout, panels size, seam type and location, location of test coupons, and areas where repairs were made. Drawings shall be prepared in accordance with Division 1.

G. Submit inspection and testing data for factory fabricated seams.

H. Submit geomembrane manufacturer's quality control manual including description of laboratory facilities.

I. Submit results of the manufacturer's physical properties testing in accordance with the approved QA Manual. Testing shall include, but not be limited to, the typical properties outlined in Table 1.

1.8 DELIVERY, STORAGE, AND HANDLING

A. Each roll of geomembrane shall be marked to show the following minimum information:
1. Name of manufacturer.
2. Product type.

475

3. Physical dimensions (length and width).
4. Roll identification number.

B. The Liner Subcontractor shall review, inspect, and place into proper storage all materials received on site until their installation. All such materials shall be inspected to verify their conformance with the requirements of these specifications and that they are free of defects. Any nonconforming or defective materials shall be clearly marked and promptly repaired per approved procedure or removed from the job site.

C. When the geomembrane materials are delivered to the construction site, FERMCO, or designated representative, will inspect to confirm that the material is the material that was specified and that the material is not damaged. Inspection activities shall prevent, detect, and correct the following:
1. Puncture from nails or splinters.
2. Tears from operation of equipment or inadequate packaging.
3. Blocking (the bonding together of adjacent membrane layers), which may be caused by excessive heat.
4. Crumpling or tearing from inadequate packaging support.

D. Handling
1. Palleted geomembrane panels shall be accordion folded width-wise and length-wise without causing damage to the geomembrane.
2. Banding straps around the geomembrane and pallet shall be properly cushioned so as not to cause damage to any part of the geomembrane panel.
3. The stacking of palleted geomembrane panels on top of one another is not permitted.
4. Damage shall be avoided by careful handling of the geomembrane material during preparation for shipment and of the packaged crates and rolls of material.
5. When damage to a crate or roll cover has occurred, careful examination of the underlying material is required. If damage is found, the Liner

Subcontractor, Subcontractor, and FERMCO should carefully examine the entire shipment for damage.

E. Storage: Sufficient quantities of materials shall be stockpiled to meet project schedule and requirements. Materials shall be stored on site at locations designated by FERMCO.

F. The Liner Subcontractor shall be responsible for unloading, storage, and care of the geomembrane material until such material has been incorporated into the work. Materials shall be stored in a manner that prevents damage and shall be kept out of direct sunlight. The materials shall be stored on a prepared surface (excluding wooden pallets) and shall not be stacked more than two rolls high.

G. The Liner Subcontractor shall be responsible for replacing any damaged or unacceptable material at no expense to FERMCO.

1.9 SEQUENCING AND SCHEDULING

A. The Liner Subcontractor shall provide a sequence and schedule of work for the approval of FERMCO.

PART 2 PRODUCTS

2.1 MANUFACTURERS

A. HDPE liner shall be Gundline HD or Hyperflex, both by GSE Lining Technologies Systems Inc., equivalent products by SERROT Corp., POLY_FLEX Corp., National Seal Company, or other approved equal.

B. Materials manufactured by others may be submitted to FERMCO for consideration.

2.2 EQUIPMENT

A. The Liner Subcontractor shall use appropriate installation and welding equipment per the manufacturer's instructions.

B. Welding Equipment: The welding equipment used shall be capable of continuously monitoring and controlling the extrusion/fusion zone. The fillet-extrusion welding device provides continuous dynamic integration of the extrudate into the sheet material through the means of rotating tips in the nozzle. The composition of the extrudate (welding rod) is identical to the flexible membrane liner. This method of seaming is applied for all tees, patches, "fishmouths," and detail work. The fusion welding device employs a hot wedge (hot shoe) and compression. The system lifts both layers of flexible membrane liner off the subgrade, and fusion is brought about by melting the sheets against the hot wedge and compressing the two melted surfaces together, resulting in a total integration of the layers.

2.3 MATERIALS

A. Liner: The liner membrane shall be designed and manufactured specifically for the purpose of containment of liquids in hydraulic structures. It shall be manufactured from new, first-quality HDPE resin and shall meet the physical requirements indicated in the Physical Properties Table.

B. Other Materials

1. Boots for pipe penetrations shall be prefabricated and designed to fit site-specific conditions for the intended slope and size of pipe. Boots shall be of the same material as the geomembrane.

478

C. Typical Physical Properties:

Typical Properties	Test Method	Gage (Nominal) 60 mil (1.00 mm) HDPE
Density g/cc. (Min.)	ASTM D1505	0.94
Tensile Properties (Typical)	ASTM D 638 Type IV Dumb Bell at 2 ipm	
1. Tensile Strength at Break (Pounds/inch width)		240
2. Tensile Strength at Yield (Pounds/inch width)		140
3. Elongation at Break (Percent)		700
4. Elongation at Yield (Percent)		13
Tear Resistance Initiation, lbs. (Typical)	ASTM D1004 Die C	45
Low Temperature Brittleness, F (Typical)	ASTM D746 Procedure B	-107
Dimensional Stability, Percent Change Each Direction (Max.)	ASTM D1204 212 degrees F 1 hr.	±2
Puncture Resistance, Pounds (Typical)	FTMS 101B Method 2065	80

2.4 FACTORY FABRICATION

A. Factory fabrication of pipe boots or other specialized fabrications shall be performed by the geomembrane manufacturer. Factory fabrication of geomembrane blankets or panels is prohibited.

B. Factory fabrication shall be performed under environmental conditions as recommended by the manufacturer.

C. The geomembrane material shall be continuously inspected for uniformity, damage, imperfections, holes,

cracks, thin spots, foreign materials, tears, punctures, and blisters. Any imperfections shall be immediately repaired and reinspected.

D. All seams shall be visually inspected and results documented.

E. Nondestructive seam testing shall be performed on all fabricated seams over their full length in accordance with ASTM D4437 and the manufacturer's quality control manual. Test methods shall be vacuum chamber, except air lance may be used on inaccessible seams.

F. All inspection and testing of factory seams shall be performed by the manufacturer's laboratory.

G. Failure of the material and/or seams to meet all the requirements of these specifications may be cause for rejection of the geomembrane material and/or seams, as appropriate.

H. In addition to visual inspection and nondestructive testing, a 48-inch sample shall be taken from each factory seam welding unit used in this work at the beginning of every work shift and every 4 hours of production thereafter. Samples shall be from the same production lot as the field panels (i.e., will not require patching of fabricated panels). Test specimens shall be cut at quarter points from each 48-inch seam sample (a total of three places) and tested for factory seam strength and peel adhesion. The seam strength shall be tested in accordance with ASTM D4437, as modified in Annex A of NSF 54, and shall have a tensile strength of at least 35 lbs per inch. Failure of seam shall be classified as FTB. The peel adhesion shall be tested in accordance with ASTM D4437, as modified in Annex A of NSF 54, and shall provide a value of 25 lbs per inch. Failure of seam shall be classified as FTB.

PART 3 EXECUTION

3.1 PREPARATION

A. The earthen surface shall be smooth and true to grade (within the grading tolerance of plus or minus 0.1 foot) with no exposed rocks, stones, sticks, roots, or other sharp objects or debris of any kind.

B. Before starting installation of the liner, the Liner Subcontractor shall inspect the substrate for suitability with the requirements of the liner. The liner installer shall certify in writing that the surface on which the membrane is to be installed is acceptable before commencing work.

C. During the time of liner installation, the Liner Subcontractor shall be responsible for protection and maintenance of the exposed subgrade until final acceptance of the liner, including maintenance of the moisture content of the underlying clay materials.

3.2 ERECTION/INSTALLATION/APPLICATION

A. Verify gradients and elevation of subbase.

B. Verify that subgrade is dry.

C. HDPE liner shall be placed directly over subgrade. HDPE liner shall be placed and anchored in such a manner that placement of overlying materials will not excessively stretch or tear the fabric.

D. Appropriate measures shall be taken during installation to provide sufficient slack in the liner to avoid the generation of excessive stresses in the liner due to temperature changes.

E. Field seams shall be made using either the dual hot wedge (fusion) welding or the fillet-extrusion welding process. Field seams shall be made only when weather conditions are favorable. The contact surfaces shall be free of dirt, dust, moisture, or other foreign

material. The contact surfaces shall be aligned with sufficient overlap and bonded in accordance with the liner manufacturer's recommended procedures. Wrinkles shall be smoothed out, and seams shall be inspected by nondestructive testing techniques to verify their integrity.

F. Deployment

1. The geomembrane shall be deployed following the manufacturer's recommendations so that, at the time of installation, it will contain a minimum of wrinkles and be under minimum stress.
2. Each panel/roll of the geomembrane shall be rolled out and installed in accordance with the approved shop drawings. The layout shall be designed to keep field joining of the geomembrane to a minimum and to be consistent with proper methods of geomembrane installation.
3. The geomembrane shall be unfolded or unrolled so as to prevent damage to the underlying or prepared subgrade.
4. Should punctures, rips, or tears be encountered in the geomembrane material, the Liner Subcontractor shall immediately notify FERMCO.

G. Seaming Weather Conditions

1. Normal Weather Conditions
   a. The normal required weather conditions for seaming are as follows:
      1) Ambient temperature as recommended by the manufacturer.
      2) No precipitation or other excessive moisture, such as fog, dew, or ponded water.
      3) No excessive winds.
   b. These weather conditions shall be fulfilled during seaming process.
2. Cold Weather Conditions
   a. If the ambient temperature is below 40 degrees F, no seaming of geomembrane shall be permitted unless the Liner Subcontractor can demonstrate to FERMCO's satisfaction that geomembrane seam quality is not adversely

482

impacted. The following conditions shall also be met to ensure a quality seaming process:

1) Preheating the surface of the geomembrane to achieve normal temperature range.
2) Preheating may be waived by FERMCO if the Liner Subcontractor demonstrates that satisfactory welds of equivalent quality may be obtained without preheating at the expected temperature of installation.
3) Preheating devices shall be approved by the manufacturer.
4) Care shall be taken to ensure that surface temperatures are not lowered below the minimum required surface temperature for welding due to winds.
5) Additional destructive test samples shall be taken at FERMCO's discretion.
6) Trial seams shall be performed under the same ambient temperature conditions as the actual seams.

3. Warm Weather Conditions
   a. If the ambient temperature is above 104 degrees F, no seaming of geomembrane shall be permitted unless the Liner Subcontractor can demonstrate to FERMCO's satisfaction that geomembrane seam quality is not adversely impacted.
   b. Test seams shall be performed under the same ambient temperature conditions as the actual seams.
   c. Additional destructive test samples shall be taken at FERMCO's discretion.

H. Field Seaming

1. Panel field seaming shall be performed using the dual hot wedge welding techniques as outlined in Section 7 of US EPA Technical Guidance Document EPA/530/SW-91/051. Welding equipment and seaming temperatures shall be in accordance with the manufacturer's recommendations.

2. Field seams shall be oriented parallel to the line of maximum slope.
3. Unless directed otherwise by FERMCO, minimum overlap for field seams shall be in accordance with the manufacturer's recommendations.
4. The welding equipment used shall be capable of continuously monitoring and controlling the temperatures in the zone of contact where the machine is actually fusing the lining material to ensure that changes in environmental conditions will not affect the integrity of the weld.
5. Welding of field seams with an extrusion welder is only acceptable for repairing holes in the liner, repairing failed seams revealed by nondestructive testing, repairing areas where destructive testing is performed, at pipe/liner penetration boots, and other areas where the hot wedge welding machines cannot be used due to space restrictions.

I. The liner shall be placed over the prepared surface in such a manner as to ensure minimum handling. The geomembrane shall not be dragged over rough subgrade surfaces. Any damage to the base surface resulting from liner installation or liner handling equipment shall be repaired by the Liner Subcontractor at its own expense prior to placement of the liner. Vehicular traffic across the geomembrane shall not be allowed. The panels shall be such lengths and widths and shall be placed in such a manner as to minimize field seaming.

J. In areas where wind is prevalent, liner installation shall be started at the upwind side of the project and proceed downwind. The leading edge of the liner shall be secured at all times with sandbags or other means sufficient to hold it down during high winds.

K. Sandbags shall be used as required to hold the liner in position during installation. Materials, equipment, or other items shall not be dragged across the surface of the liner nor be allowed to slide down slopes on the liner.

L. Liner panels shall be closely fit and sealed around inlets, outlets, and other projections through the liner. All piping, structures, and other projections through the liner shall be sealed as shown on the Construction Drawings.

M. All joints shall be tightly bonded on completion of the work. Any liner surface showing injury resulting from scuffing, penetration by foreign objects, or distress from rough subgrade shall be repaired or replaced as approved by FERMCO.

N. Each suspect location shall be nondestructively tested using methods described in Section 1.4 as appropriate. The Liner Subcontractor shall not proceed with any materials which will cover locations that have been repaired until satisfactory test results have been obtained.

O. Pipe/Liner Penetration Boots

1. The geomembrane boots shall be furnished and installed where indicated on the Construction Drawings.
2. The geomembrane boots shall terminate in a skirt section suitable for welding to the geomembrane.
3. Boots and skirts shall fit snugly around the pipe. Prefabricated material shall be designed to fit site-specific conditions for the intended size and slope of pipe.
4. The geomembrane shall be secured to the pipe with clamps as shown on the Construction Drawings after pipe/liner penetration boots have been tested.

P. Any wrinkles that can fold over shall be repaired either by cutting out excess material or, if possible, allowing the liner to contract due to temperature reduction prior to placing the overlying material. In no case shall material be placed over the geomembrane which could result in the geomembrane folding.

Q. Destructive Seam Testing

1. Two types of samples shall be taken at each location, one for field tests and one for laboratory tests.
2. For the field tests, two seam samples, 1 inch wide by 12 inches long with the seam centered across the length shall be taken 42 inches apart. These sample coupons shall be removed by the Liner Subcontractor for every 500 feet of seam length. A minimum of three samples shall be tested, including at least one for each day's production seaming. The seams shall not be covered by another material before they have been tested and accepted by FERMCO.
3. Upon obtaining each sample, assign a number to the sample and mark it accordingly. Record sample location on the layout drawing. Record the purpose of the sample (i.e., statistical, routing, or suspicious weld area).
4. These samples shall be tested in the field using a tensiometer capable of quantitatively measuring shear and peel strengths.
5. The sample coupon shall be divided into three equal parts: one part for laboratory testing, one part to the Construction Manager for archive storage, and one part to the Liner Subcontractor for field testing. The sample coupon shall be tested in the testing laboratory for shear strength and peel adhesion.

R. Repair Procedures

1. Any portion of the geomembrane failing a destructive test, nondestructive test, or any damaged portion shall be repaired in accordance with this section and the manufacturer's recommendations.
2. All surfaces shall be clean and dry at the time of the repair.
3. The repair procedures, materials, and techniques shall be approved in advance of the specific repair by FERMCO. Approved methods from which the selected repair shall be chosen are as follows:

a. Patching - used to repair large holes, tears, large panel defects, and destructive sample locations.

b. Capping - used to repair failed welds or to cover seams where welds cannot be nondestructively tested.

c. Removal - used to replace areas with large defects where the preceding methods are not appropriate. Also used to remove excess material (wrinkles) from the installed geomembranes.

4. If a sample fails one of the destructive tests, the seam shall be reconstructed using one of the following methods:

   a. The seam shall be reconstructed between the location of the sample which failed and the location of th next passing sample in each direction.

   b. The welding path is retraced to an intermediate location at least 10 feet from the location of the failed sample and a second sample is taken for additional testing. If the second test sample passes, the seam shall then be reconstructed between the location of the second test and the original sampled location. If the second test fails, this process shall be repeated.

5. All acceptable seams shall extend between two locations where samples passed the required test and shall include one test location along the reconstructed seam.

6. Each major repair requiring a patch of cap shall be identified on the as-built drawing.

7. Each repair shall be numbered and logged by the Liner Subcontractor. Each repair shall be nondestructively tested using methods described in this section. Repairs which pass the nondestructive test shall be taken as an indication of an adequate repair. Repairs more than 100 feet long may be sufficient to require destructive test sampling, as FERMCO's discretion. Failed tests indicate that the repair shall be redone and retested until passing test results are

achieved. FERMCO shall observe all nondestructive testing of repairs. The Liner Subcontractor shall record the number of each repair, the test location, date, and test outcome.

3.3 QUALITY CONTROL

A. General: The liner installer shall conduct a fully documented quality assurance/quality control program to ensure that all installation work is performed which will result in a secure, watertight liner. All quality control inspection and testing shall be performed by qualified personnel who are thoroughly knowledgeable about all installation procedures and techniques used. Three copies of all inspection and test reports generated by the Liner Subcontractor shall be submitted to FERMCO not later than the second work day following their generation. As a minimum, the Liner Subcontractor shall provide written verification of the results of all of the following inspections and tests.

B. Weld Quality Control

1. A trial seam, 3 feet long, from each welding machine shall be run each day prior to liner seaming and under the same conditions as exist for the liner seaming. Additionally, at least once every 4 hours during continuous operation.
   a. Samples of seam shall be cut from the test weld 1/4 inch to 1/2 inch wide and tested by field tensiometer in the peel and shear modes.
   b. Should failure of the seam occur, another trial seam shall be prepared and tested. If the additional sample fails, the seaming apparatus and seamer shall not be accepted until deficiencies are corrected.
   c. The trial seam shall be marked with the time of day, date, ambient temperature, and welding machine used in its production.
   d. The seam sample shall be kept for subsequent testing on laboratory tensiometer equipment in accordance with the applicable ASTM D1004 and D4437 tests. If either sample fails

through the weld, the welding machine shall be adjusted as appropriate and another test weld produced and tested until satisfactory results are achieved. A calibrated, hand-operable tensile testing machine shall be furnished by the Liner Subcontractor for the purpose of tensile testing.

2. All welds, on completion of the work, shall be tightly bonded. Any membrane area showing injury due to excessive scuffing, puncture, or distress from any cause shall be replaced or repaired with an additional piece of HDPE membrane.
3. A quality control technician, employed by the Liner Subcontractor, shall follow behind each seam crew and perform a visual inspection of the seamed area. Defective seams shall be marked and repaired in accordance with manufacturer's published repair procedure.
4. No "fishmouths" shall be allowed within the seam area. Where "fishmouths" occur, the material shall be cut and overlapped, and an overlap-extrusion weld shall be applied.

B. Nondestructive Testing: All field seams (100 percent) shall be tested nondestructively. Fillet-extrusion welds are tested with a vacuum chamber in accordance with ASTM 4437. Hot wedge welds shall be dual seam pressure tested, pressurizing the air channel created by the split face design of the hot wedge per GRI GM-6.

C. Destructive Seam Testing
1. Two types of samples shall be taken at each location, one for field tests and one for laboratory tests.
2. For the field tests, two seam samples, 1 inch wide by 12 inches long with the seam centered across the length shall be taken 42 inches apart. These sample coupons shall be removed by the Liner Subcontractor for every 500 feet of seam length, unless more frequent testing is required by FERMCO. A minimum of three samples shall be tested, including at least one for each day's production seaming. The seams shall not be

covered by another material before they have been tested and accepted by FERMCO.

3. Upon obtaining each sample, assign a number to the sample and mark it accordingly. Record sample location on the layout drawing. Record the purpose of the sample (i.e., statistical, routing, or suspicious weld area).
4. These samples shall be tested in the field using a tensiometer capable of quantitatively measuring shear and peel strengths.
5. The sample coupon shall be divided into three equal parts: one part for laboratory testing, one part to the Construction Manager for archive storage, and one part to the Liner Subcontractor for field testing. The sample coupon shall be tested in the testing laboratory for shear strength and peel adhesion.

D. Repair Procedures

1. Any portion of the geomembrane failing a destructive test, nondestructive test, or any damaged portion shall be repaired in accordance with this section and the manufacturer's recommendations.
2. All surfaces shall be clean and dry at the time of the repair.
3. The repair procedures, materials, and techniques shall be approved in advance of the specific repair by FERMCO. Approved methods from which the selected repair shall be chosen are as follows:
   a. Patching - used to repair large holes, tears, large panel defects, and destructive sample locations.
   b. Capping - used to repair failed welds or to cover seams where welds cannot be nondestructively tested.
   c. Removal - used to replace areas with large defects where the preceding methods are not appropriate. Also used to remove excess material (wrinkles) from the installed geomembranes.

4. If a sample fails one of the destructive tests, the seam shall be reconstructed using one of the following methods:
   a. The seam shall be reconstructed between the location of the sample which failed and the location of th next passing sample in each direction.
   b. The welding path is retraced to an intermediate location at least 10 feet from the location of the failed sample and a second sample is taken for additional testing. If the second test sample passes, the seam shall then be reconstructed between the location of the second test and the original sampled location. If the second test fails, this process shall be repeated.
5. All acceptable seams shall extend between two locations where samples passed the required test and shall include one test location along the reconstructed seam.
6. Each major repair requiring a patch of cap shall be identified on the as-built drawing.
7. Each repair shall be numbered and logged by the Liner Subcontractor. Each repair shall be nondestructively tested using methods described in this section. Repairs which pass the nondestructive test shall be taken as an indication of an adequate repair. Repairs more than 100 feet long may be sufficient to require destructive test sampling, as FERMCO's discretion. Failed tests indicate that the repair shall be redone and retested until passing test results are achieved. FERMCO shall observe all nondestructive testing of repairs. The Liner Subcontractor shall record the number of each repair, the test location, date, and test outcome.

3.4 CLEANING

Remove and manage excess materials in accordance with the subcontract, Part 6, Scope of Work.

3.5 PROTECTION

A. Provide protection from damage until anchorage and welding of seams has been accomplished and all testing and inspections are completed.

END OF SECTION

SECTION 02720
SITE DRAINAGE

PART 1 GENERAL

1.1 SECTION INCLUDES

A. Outfall protection.

B. Storm drainage.

C. Catch basins.

D. Manholes.

E. Pump station manhole.

F. Headwalls and endwalls.

1.2 RELATED SECTIONS

A. Section 01010 - General Requirements.

B. Section 01011 - Submittals.

C. Section 02200 - Earthwork.

D. Section 02270 - Erosion Control.

1.3 REFERENCE DRAWINGS

A. See Section 01012 for the Schedule of Drawings.

1.4 REFERENCES

A. State of Ohio, Department of Transportation, Construction and Material Specifications, January 1, 1995 (ODOT). Except as supplemented or otherwise modified herein and/or shown on the construction drawings, the entire work under this section shall be in compliance with the provisions of ODOT.

B. American Society for Testing and Materials (ASTM):

1.	ASTM A48-Rev. A-93	Standard Specification for Gray Iron Castings (AASHTO M105).
2.	ASTM A185-Rev. A-90	Standard Specification for Steel Welded Wire Fabric, Plain, for Concrete Reinforcement (AASHTO M55).
3.	ASTM A615-Rev. B-92	Deformed and Plain Billet-Steel Bars for Concrete Reinforcement.
4.	ASTM C31-91	Standard Practice for Making and Curing Concrete Test Specimens in the Field.
5.	ASTM C39-86	Standard Test Method for Compressive Strength of Cylindrical Concrete Specimens.
6.	ASTM C94-Rev. A-92	Standard Specification for Ready Mixed Concrete.
7.	ASTM C143-Rev. A-90	Standard Test Method for Slump of Hydraulic Cement Concrete.
8.	ASTM C231-Rev. B-91	Standard Test Method for Air Content of Freshly Mixed Concrete by the Pressure Method.
9.	ASTM C920-87	Elastomeric Joint Sealants.
11.	ASTM D1248-84	Standard Specification for Polyethylene Plastics Molding and Extrusion Materials.
12.	ASTM D1751-83	Preformed Expansion Joint Filler for Concrete Paving and Structural (Non-Extruding and Resilient Bituminous Types).
13.	ASTM D1777-64	Standard Test Method for Measuring Thickness of Textile Materials.
14.	ASTM D2321-89	Standard Practice for Underground Installation of Thermoplastic Pipe for Sewer and Other Gravity-Flow Application.

15. ASTM D3776-85 — Standard Test Method for Mass per Unit Area (Weight) of Woven Fabric.

16. ASTM D3786-87 — Standard Test Method for Hydraulic Bursting Strength of Knitted Goods and Nonwoven Fabrics-Diaphragm Bursting Strength Tester Method.

17. ASTM D4491-92 — Standard Test Method for Water Permeability of Geotextiles by Permissivity.

18. ASTM D4533-91 — Standard Test Method for Trapezoid Tearing Strength of Geotextiles.

19. ASTM D4632-91 — Standard Test Method for Grab Breaking Load and Elongation of Textiles.

20. ASTM D4751-87 — Standard Test Method for Determining Apparent Opening Size of a Geotextile.

21. ASTM D4833-88 — Standard Test Method for Index Puncture Resistance of Geotextiles, Geomembranes, and Related Products.

22. ASTM F405-93 — Standard Specification for Corrugated Polyethylene (PE) Tubing and Fittings.

C. American Association of State Highway and Transportation Officials (AASHTO):

1. AASHTO M36-90 — Standard Specification for Corrugated Steel Pipe, Metallic-Coated, for Sewers and Drains.

D. American Concrete Institute (ACI):

1. ACI 301, 318-89 — Specifications for Structural Concrete for Buildings, Building Code Requirements for Reinforced Concrete.

2. ACI SP-66-94 — ACI Detailing Manual.

1.5 SUBMITTALS

A. Provide submittals as required by Section 01011.

B. Project Record Documents: Accurately record actual locations by NAD83 coordinates of all underground utilities, piping mains, valves, connections, and invert elevations, and show on as-built drawings.

C. Identify and describe unexpected variations to subsoil condition or discovery of uncharted utilities.

D. Product Data:
   1. Concrete mix designs, including documentation of aggregate sources and most recent sieve analysis within the past year.
   2. Product Data: Provide data on all pipe materials, pipe fittings, valves, accessories, and the methods and equipment for High-Density Polyethylene (HDPE) fusion welding.

E. Concrete Supplier: Name and address of the transit-mix concrete supplier. Supply typical batch ticket and history per ASTM C94.

F. Placement Records: Records of time, dates, and locations of concrete placing operations upon completion of work.

G. Test Reports: Test reports for all tests required under Field Quality Control.

H. Submit manufacturer's certification that materials supplied meet or exceed the requirements specified.

I. Material Safety Data Sheet (MSDS): MSDSs shall be submitted to FERMCO Industrial Hygiene (IH) for any chemical compound or material used on the project. MSDSs shall be submitted at least 2 to 3 weeks in advance to FERMCO IH for review prior to the chemical compound or material arriving on site. The listing of hazardous chemicals/materials present, labeling of containers, and employee training and protective

measure programs shall be in accordance with 29 CFR 1910.1200.

J. Submit shop drawings of precast pump station manhole, precast catch basin, frame, and grate.

K. Prior to the placement of debris into containers, the Subcontractor shall submit a detailed waste handling plan for approval by FERMCO and FERMCO Quality Assurance.

L. As-built drawings.

1.6 QUALITY ASSURANCE PROGRAM

A. Piping: Manufacturer's name and pressure rating marked on valve body.

1.7 DELIVERY, STORAGE, AND HANDLING

A. Deliver, store, protect, and handle products to construction site.

PART 2 PRODUCTS

2.1 MATERIALS

A. Non-woven, geotechnical fabric similar to Trevira™ No. 1125 as per the following table:

MINIMUM PHYSICAL PROPERTIES (Minimum Average Roll Values)			
Property	**Test Method**	**Units**	**Mat'l**
Unit Weight	ASTM D3776	oz./yd.^{2}	7.1
Grab Tensile	ASTM D4632	lbs.	210
Grab Elongation	ASTM D4632	percent	60
Mullen Burst	ASTM D3786	psi	360
Puncture	ASTM D4833	lbs.	95
Trapezoid Tear	ASTM D4533	lbs.	75
Apparent Opening Size	ASTM D4751	US Sieve Number	70
Permissivity	ASTM D4491	gal/min/ft^2/ sec^{-1}	110 1.47
Permeability	ASTM D4491	cm/sec	0.35
Thickness	ASTM D1777	mils	95

B. Concrete Materials:

1. All cast-in place concrete to be ODOT Class C concrete (average compressive strength at 28 days of 4,000 psi).
2. All precast concrete shall meet the requirements of ODOT 706.13 with 6 ±2 percent air void content in the hardened concrete.

C. Stone shall meet the requirements of ODOT 601.07, Type C dumped rock fill.

D. Catch Basin Frame and Grate:

1. Frame and grate to be gray iron manufactured from iron conforming to ASTM A48, Class 30.
2. Total weight shall be a minimum of 185 pounds.

E. Corrugated HDPE: Smooth interior, corrugated high-density polyethylene pipe and fittings shall be made of polyethylene compounds that meet or exceed the requirements of Type III, Category 4 or 5, Grade P33 or P34, Class C per ASTM D1248 and ASTM F405.

F. Concrete Accessories
1. Joint Sealer: Elastomeric joint sealant conforming to ASTM C920; Type S or Type M, Grade P, Class 25.
   a. Acceptable products and suppliers (or equal):
      1) Sikadur 51 SL, by Sika Corp.
      2) Sonolastic SL-1, by Sonneborn Building Products.
2. Slab Edge Joint Filler: ASTM D1751, premolded asphaltic board, 1/2-inch thick.

G. Reinforcement Materials
1. Reinforcing Steel: ASTM A615, 60 ksi yield grade; deformed billet steel bars; plain finish.
2. Welded Steel Wire Fabric: ASTM A185 plain type, flat sheets, plain finish.
3. Tie Wire: Minimum 16-gage, annealed type wire.
4. Chairs, Bolsters, Bar Supports, Spacers: Sized and shaped for strength and support of reinforcement during concrete placement conditions.
5. Fabrication: Fabricate concrete reinforcing in accordance with ACI SP-66 and Chapters 7 and 12 of ACI 318.

H. Corrugated Metal Pipe
1. Corrugated metal storm pipe shall be in accordance with AASHTO M36 and ODOT 707. Corrugated metal drain pipe shall be galvanized, of the size and type specified on the drawings.

PART 3 EXECUTION

3.1 FIELD CONDITIONS

A. Verify that excavations are ready to receive work.

3.2 PREPARATION

A. Hand trim excavations. Correct over-excavation according to the requirements of Section 02200 of this specification package.

3.3 ERECTION/INSTALLATION/APPLICATION

A. General

1. All riprap outfall protection shall be installed on filter fabric as shown on the drawings.
2. If rock is encountered, the excavation shall be carried no less than 6 inches and no more than 12 inches below the bottom of the concrete. Approved compacted material shall be used to backfill from rock excavation prior to installation.
3. All compacted backfill shall be inorganic material, free of rock or gravel over 3 inches in greatest dimension, and free of other objectionable substances which will prevent satisfactory compaction. Backfill compaction shall conform to the requirements of Section 02200. Puddling of backfill will not be allowed.
4. See Section 02200 for the frequency of samples.
5. Excavation shall conform to Section 02200.

B. Installation of Catch Basins and Manholes

1. Subject to approval of FERMCO, the Subcontractor is to adjust dimensions of the catch basin to meet field conditions and the proposed finish surface grades.
2. Include actual invert in and out, frame elevation and horizontal location as part of the as-built survey.

C. Installation of HDPE Pipe and Corrugated Metal Pipe

1. The pipe and fittings shall be free of foreign inclusions and visible defects. The ends of the pipe shall be cut squarely and cleanly so as not to adversely affect joining. Pipe shall be flush with headwalls.
2. All pipe shall be laid as shown in the drawings.

3. Joints for HDPE pipe shall be made with split couplings, corrugated to engage the pipe corrugations, and shall engage a minimum of four corrugations, two on each side of the pipe joint. A neoprene gasket shall be utilized with the coupling to provide a soil-tight joint. Installation shall be in accordance with ASTM D2321 or as specified by FERMCO.
4. Joints for corrugated metal pipe shall be made with corrugated galvanized steel coupling bands in accordance with AASHTO M36.
5. Holes cut in corrugated metal pipe riser shall be free of burs. Holes and welds shall be painted with two coats of zinc coating to inhibit rust.

3.4 QUALITY CONTROL

A. Inspection: After the Subcontractor has performed the inspections, and prior to testing and backfill, the Subcontractor shall notify FERMCO as noted in Paragraph B.
1. Inspection shall include checking for proper alignment and location of all catch basins and ditches.
2. Stone apron must be free of debris, dirt, sand, silt, or other foreign matter.
3. All inspections shall have a report filed with FERMCO within 1 week after the test.
4. Backfill compaction quality assurance shall conform to Article 1.7, Section 02200.

B. Testing: The Subcontractor shall pay for and provide for services of an independent testing agency, and provide all testing reports to FERMCO immediately upon availability to the Subcontractor. The Subcontractor shall notify FERMCO of testing/inspection activities at least 24 hours prior to the start of all tests or inspections. The agency shall collect field samples for testing, shall perform field tests, and shall perform laboratory tests on the specimens. Concrete testing shall be performed in accordance with Chapter 16 of ACI 301 for each 50 cubic yards, or fraction thereof, of each mix design placed in any 1 day.

1. Slump Tests: ASTM C143. One sample for each strength test.
2. Air Content Tests: ASTM C231. One sample for each strength test.
3. Test Cylinders: ASTM C31. One set of three cylinders for above quantities.
4. Compressive Strength: ASTM C39. One specimen tested at 7 days and two specimens tested at 28 days.

3.5 PROTECTION

A. The Subcontractor shall provide maintenance as necessary to limit sediment discharges from the affected construction areas so that there is no decrease in the area's stormwater quality.

END OF SECTION

SECTION 02733
PUMP STATION

PART 1 GENERAL

1.1 SECTION INCLUDES

A. Furnish all labor, materials, equipment, components, and services necessary to design, construct, and install one automatically controlled duplex pumping unit capable of raw unscreened stormwater. The pumps and mechanical accessories and wet well shall be installed as shown on the drawings. The pump control panel, liquid level control, and system valving shall be installed in a factory-built fiberglass station enclosure to provide for a complete working system.

1.2 RELATED SECTIONS

A. Section 01010 - General Requirements.

B. Section 01011 - Submittals.

C. Section 02200 - Earthwork.

D. Section 02720 - Site Drainage.

1.3 REFERENCE DRAWINGS

A. See Section 01012 for the Schedule of Drawings.

1.4 REFERENCES

A. American Society for Testing and Materials (ASTM):

1. ASTM C443-94 — Standard Specification for Joints for Circular Concrete Sewer and Culvert Pipe, Using Rubber Gaskets.
2. ASTM C478-94 — Standard Specification for Precast Reinforced Concrete Manhole Sections.

B. Underwriters Laboratories, Inc. (UL):

1. UL 67-93 — UL Standard for Safety Panelboards, Eleventh Edition.
2. Electrical Construction Materials Directories, 1995.

C. National Fire Protection Association (NFPA):

1. NFPA 70-96 — National Electric Code.

D. American National Standards Institute (ANSI):

1. ANSI 16.1-89 — Cast Iron Pipe Flanges and Flanged Fittings.
2. ANSI 360-86 — Liquid-Tight Flexible Steel Conduit.

E. American Water Works Association (AWWA):

1. AWWA C115/ A21.15-88 — Flanged Ductile Iron Pipe with Threaded Flanges.

F. National Electric Manufacturers Association (NEMA):

1. NEMA ICS 2-93 — Industrial Control and Systems Controllers, Contactors, and Overload Relays Rated Not More Than 2000 Volts AC or 750 Volts DC.
2. NEMA ICS 6-88 — Enclosures for Industrial Controls and Systems.
3. NEMA MG 1-93 — Motors and Generators.

G. Hydraulic Institute Standards.

1.5 SUBMITTALS

A. Provide submittals as required by Section 01011.

B. Manufacturer's Support Literature: Submit manufacturer's support literature, including operating instructions, installation instructions, maintenance and repair data, parts listing, start-up instructions, and dimensions of manufacturer's products.

C. Certificates of Conformance: Manufacturer shall certify and provide data which indicate that all

504

[redacted]

supplied products meet or exceed the requirements of this specification.

D. Submit details of fiberglass enclosure heater, piping, valves, guide rails, pump anchor assembly, pumps, electrical controls and wiring, pump level controls, access door, structural connections, and wet well for approval.

1.6 QUALITY ASSURANCE PROGRAM

A. Products Requiring Electrical Connection: Shall be listed and classified by Underwriters Laboratories, Inc., Electrical Construction Materials Directories, 1995, as suitable for the purpose specified and indicated.

PART 2 PRODUCTS

2.1 MANUFACTURERS

A. The Gorman-Rupp Co.

B. ITT Flygt Corp.

C. ABS Pumps, Inc.

D. Smith & Loveless, Inc.

2.2 EQUIPMENT

A. Pumps

1. Operating Conditions: Each submersible pump shall have the necessary characteristics and be properly selected to deliver 250 gpm at a design dynamic discharge head of 40 feet and have other necessary characteristics as listed below.
2. Hydraulic Components and Solids Handling:
   a. All pump openings and passages shall be of adequate size to pass 3-inch-diameter spheres (minimum), trash, or stringy material. The impeller shall be recessed into the pump casing and shall not require flow of liquid

through the impeller. The impeller and seal housing shall incorporate auxiliary vanes to hydraulically reduce pressure on the primary seal and force fibrous materials and solids away from the close axial clearance on the backside of the impeller. No impeller clearance adjustment or wear rings shall be required.

b. The impeller shall be a multivane vortex type with integral winglets on each vane. The winglet shall form an L-shaped cross section at the face of the vane for improved hydrodynamic efficiency. Impeller shall be of ductile iron and precision balanced. Balancing shall not deform or weaken the impeller. The impeller shall have a tapered locking fit onto the shaft and be further secured by a key and locking bolt. Impeller fasteners shall be noncorroding.

3. Hoisting Bail: A hoisting bail shall provide for proper balance of pump and guide shoe from the discharge connection while using a single lift cable.

4. Components: All other major pump components such as stator housing, seal housing, and bearing brackets shall be of structural grade steel or gray iron - Class 30. All external surfaces coming into contact with sewage shall be protected by a coal tar-based epoxy coating of 8 mils minimum thickness. All exposed fasteners and lock washers shall be of 304 stainless steel.

5. Shaft Seal:

a. The pump shaft shall be sealed against leakage by a mechanical-double faced seal with combined spring system for the upper and lower portion. The lower wearing faces shall be silicon carbide. The upper faces shall be carbon and hardened stainless steel. Elastomers shall be viton.

b. The rotating seal faces shall be lubricated from an oil-filled reservoir between pump and motor, the oil serving as both lubricating and cooling media. The reservoir shall have

separate oil fill and drain plugs to ensure accuracy when measuring lubricant level, and for ease of maintenance.

c. Seal shall require no special maintenance or routine adjustment. However, it shall be easily inspected or replaced. No seal damage shall result from operating the pump for short periods without liquid.

B. Pump Motors

1. Electrical Power: The electrical power to be furnished to the site will be 480 volts ± 10 percent, three phase, 60 Hertz, three wire.

2. Motor Description:

a. The submersible pump motor shall be 21.0 hp (maximum). The motor and pump must be connected to form an integral unit. Motor shall be a squirrel-cage, induction type in an air-filled, watertight enclosure. The motor shall conform to NEMA MG 1 design Class B, and incorporate NEMA MG 1 Class F insulation materials to withstand a continuous operating temperature of 155 degrees C (311 degrees F).

b. Motor shall be capable of sustaining a minimum of 10 starts per hour. Factory test and provide documentation with equipment.

c. Motor housing shall be of cast iron. The stator shall consist of copper windings with copper connectors applied to high-grade electrical steel laminations.

3. Watertight Integrity:

a. All static seals at watertight mating surfaces shall be of nitrile "O" ring type. Use of auxiliary sealing compounds will not be required. The power and control cables shall enter the motor through a terminal housing.

b. The pump and electrical cables shall be capable of continuous submergence to a depth of 65 feet without loss of waterproof integrity.

c. The watertight integrity of the motor housing and shaft seal shall be tested during manufacture by pressurizing the motor cavity and submerging in water with motor operating. A separate performance test shall also be conducted on each fully assembled pump to verify published head/capacity and power input. The Vendor shall provide written verification of compliance with these requirements.

4. Motor Protection: The motor shall be protected from thermal and moisture damage. Thermal protection shall consist of three separate thermostatic switches embedded into the stator windings. Each switch shall open independently and terminate motor operation if temperature of the protected winding reaches the high temperature setpoint. Any moisture in the motor housing shall be detected by a mechanically activated, moisture-sensing micro-switch. The switch shall be sensitive enough to detect airborne moisture and terminate operation of motor before liquid enters the cavity. Use of probes or floats that rely on the presence of liquid to initiate signal shall not be considered acceptable. The thermal and moisture- sensing devices shall be connected to the pump control panel by the Subcontractor.

C. Valves and Piping

1. Check Valves: Each pump shall be equipped with a full- flow type check valve, capable of passing a 3-inch spherical solid with flanged ends, and be fitted with an external lever and spring. The valve seat shall be constructed of stainless steel and shall be replaceable. The valve body shall be cast iron and shall incorporate a 3-inch cleanout port. Valve clapper shall have a molded neoprene seating surface incorporating low-pressure sealing rings. Valve hinge pin and internal hinge arm shall be stainless steel supported on each end in brass bushings; sealing bushing shall have double O-rings. O-rings shall be easily replaceable without requiring access to interior of valve

body. Valve shall be rated at 175 psi water working pressure, 350 psi hydrostatic test pressure. Valves other than full-flow type or valves mounted in such a manner that prevents the passage of a 3-inch spherical solid shall not be acceptable.

2. Isolation Valves: Each discharge line shall be equipped with a plug valve to permit isolation of the pumps from the common discharge header. The plug valve shall be either the nonlubricated, tapered type or the eccentric plug type. Valve body shall be semisteel with flanged end connections drilled to 125-pound standard. Valve shall be furnished with a drip-tight shutoff plug mounted in stainless steel or teflon over phenolic bearings, and shall have a resilient facing bonded to the sealing surface. Valves shall have ports designed to pass 3-inch spherical solids.

3. Piping:
   a. Flanged header pipe shall be centrifugally cast, ductile iron, complying with AWWA C115/A21.15 and Class 53 thickness.
   b. Flanges shall be cast iron Class 125 and shall comply with ANSI 16.1.
   c. Pipe and flanges shall be threaded with suitable thread sealant, applied before assembling flange to pipe.

4 Supports: All pipes connected to the pump station shall be supported according to good commercial practice.

D. Automatic Discharge Connection

1. Description: Each pump shall be furnished with a submersible discharge connection system to permit removal and installation of the pump without the necessity of an operator entering the wet well. The design shall ensure an automatic and firm connection of the pump to the discharge piping when lowered into place.

2. Base Plate: A gray iron cast base with integral guide rail pilots shall be provided along with all hardware and anchor bolts required for permanent installation to the wet well floor. The base

shall be designed with an integral 90-degree elbow, or adapt to a commercially available elbow for connection to the vertical discharge piping utilizing standard ANSI 125-lb flanges. The base shall be coated with coal tar epoxy for corrosion resistance. The manufacturer shall provide all necessary drawings to ensure proper installation and alignment of base plate within the sump.

3. Discharge Connection:
   a. Each pump shall be provided with a replaceable ductile iron slide rail guide shoe attached to the pump discharge flange. A replaceable neoprene seal shall be provided as an integral part of the guide shoe to form a seal with the base plate connection and eliminate the possibility of leakage and erosive wear during operation. The seal shall contact mating faces in a static position and shall have adequate flexibility to flex under pumping pressure to increase seal efficiency. Metal-to-metal contact at the discharge connection shall not be acceptable.
   b. Schedule 40 stainless steel, 304L or 316L, guide rail pipe shall be provided for each pump.
   c. Upper guide rail pilots and a lifting cable shall be furnished for each pump. Bottom pilots shall be an integral part of the base plate for ease of installation and proper alignment.
4. Guide Rail System and Method of Operation:
   a. The guide shoe shall direct the pump down two vertical guide rails and onto the discharge connection in a simple linear movement. The design shall ensure that the build-up of sludge and grease on guide rails will not present problems during the lifting operation. The guide shoe shall be designed with integral hooks at the top to transmit the full weight of the pump to the base plate flange. No portion of the pump shall be

510

supported directly on the bottom of the wet well, guide rails, or lifting cable.

b. The lifting cable shall consist of a stainless steel braided wire cable attached to the pump lifting bail. An eyelet shall be provided at the upper end of this cable for attaching to the wet well access frame.

c. All bolts, machine screws, nuts, washers, and lock washers for complete assembly of access cover, guide rails, and discharge elbow shall be 304 stainless steel.

E. Wet Well Access

1. Description: The wet well access shall be fabricated from welded aluminum sections. A hinged aluminum door shall be provided for each pump. The hinged door shall be fabricated from 1/4-inch-thick aluminum with nonskid diamond tread on upper surface. All hardware on access assembly shall be stainless steel, 304L or 316L, with a flush upper surface without protrusions. For safety, the door shall have a 300 lbs/ft^2 rating and be fitted with a recessed staple for padlock. Door shall be furnished with a flush aluminum drop handle and automatic hold- open arm with vinyl grip on release handle.

F. Electrical Control Components

1. Controls:

a. The pump control panel shall have a UL label for "Enclosed Industrial Control Panels."

b. Panel Enclosure:

1) The electrical control equipment shall be mounted within a NEMA 12 stainless steel, dead front type control enclosure. It shall include a removable steel back panel on which control components shall be mounted. Operator controls shall be mounted on a steel inner swing panel. The control panel shall be equipped with vapor emission type corrosion inhibitors. Enclosure

shall be suitable for wall mounting of panel enclosure within the station enclosure.

2) Control panel shall be in accordance with UL 67 and NEMA ICS 6.

G. Motor Branch Components

1. All operating controls and instruments shall be securely mounted and shall be clearly labeled to indicate function.
2. Main Connections: A main terminal block and ground bar shall be furnished for field connection of the electrical supply.
3. Combination Motor Starters: An open-frame, across-the-line, NEMA ICS 2 rated magnetic motor starter (size 1 or larger) shall be furnished for each pump motor. All motor starters shall be equipped to provide undervoltage release and overload protection on all three phases.
4. Overload Relays: Overload relays shall be of block type, utilizing melting alloy type spindles, and shall have visual trip indication with trip-free operation. Overload relays shall be of manual reset only. Heater elements shall provide Class 10 trip times per NEMA ICS 2 and shall be selected in accordance with the actual motor nameplate data. An overload reset pushbutton shall be mounted through the door of the control panel in such a manner as to permit resetting the overload relays without opening the control panel door.
5. Pump Motor Protection: The pump control panel shall be equipped to terminate pump operation due to high motor winding temperature or moisture in the motor housing and shall utilize the contacts in the pump motor. If either event should occur, the motor starter will drop out and a mechanical indicator, visible on the inner door, shall indicate that the pump motor has been shut down. The pump motor shall remain locked out until the condition has been corrected and then shall be manually reset.

H. Other Control Components

1. Control Circuit: The control circuit shall be protected by a normal duty thermal-magnetic air circuit breaker, which shall be connected in such a manner as to allow control power to be disconnected from all control circuits.
2. Pump Mode Selection: Pump mode selector switches shall be connected to permit manual start and manual stop for each pump individually, and to select automatic operation of each pump under control of the liquid level control system.
3. Alternator Relay: Pump alternator relay contacts shall operate after pump shutdown.
4. Pump Run Indicators: Control panel shall be equipped with one oil-tight pilot light for each pump motor. Light shall be wired in parallel with the related pump motor starter to indicate that the motor is on or should be running. Run lights shall be equipped with lamps providing a minimum of 15,000 hours.
5. Elapsed Time Indicators: Six-digit elapsed time indicators (non-reset type) shall be connected to each motor starter to indicate the total running time of each pump in "hours" and "tenths of hours."
6. Sequence Selector Switch: A switch shall be provided to permit the station operator to select automatic alternation of the pumps.
7. Dry Contacts: The control panel manufacturer shall supply dry contacts, single pole, double throw (SPDT), wired to terminal blocks for field connection to a remote status indication system:

FUNCTION		CONTACT
Motor #1 Trip (Moisture/Thermal)..	(1)	S.P.D.T.
Motor #2 Trip (Moisture/Thermal)..	(1)	S.P.D.T.
High Water Alarm.....	(1)	S.P.D.T.
Low Water Alarm.....	(1)	S.P.D.T.

In addition to above output contacts, provide an indicator light on the panel cover to indicate alarm condition with proper label.
8. Receptacle: A duplex ground fault indicating utility receptacle providing 115 VAC, 60 Hertz, single phase current shall be mounted through the

inner swing panel of the control enclosure. Receptacle circuit shall be protected by a 15-ampere thermal-magnetic circuit breaker.

9. Panel Heater: The control panel shall be equipped with a panel heater and thermostat to minimize the effects of humidity and condensation.

10. Auxiliary Power Transformer: The lift station shall be equipped with a 2 kVA stepdown transformer to supply 115 volt, AC, single phase for the control and auxiliary. A mechanical operating mechanism shall be installed on the circuit breaker to provide a means of disconnecting power to the transformer. The operator handle for the mechanism shall be located on the exterior of the control panel, with interlocks which permit the door to be opened only when the circuit breaker is in the "OFF" position.

11. Wiring:

    a. The control panel, as furnished by the manufacturer, shall be completely wired. The contractor shall field connect the power feeder lines to the main terminal block, final connections to the remote alarm devices, and the connections between the pump and the pump motor control. All wiring, workmanship, and schematic wiring diagrams shall be in compliance with applicable standards and specifications set forth by NFPA 70.

    b. All user serviceable wiring shall be type MTW or THW, 600 volts, and shall be color coded as follows:

        1) Line and Load Circuits, AC or DC power . . . . . Black
        2) AC Control Circuit Less Than Line Voltage . . . . . Red
        3) DC Control Circuit . . . . . Blue
        4) Interlock Control Circuit, from External Source . . . . . Yellow
        5) Equipment Grounding Conductor . . Green
        6) Current Carrying Ground . . . . . White
        7) Hot With Circuit Breaker Open . Orange

12. Wire Identification and Sizing:
    a. Control circuit wiring inside the panel, with the exception of internal wiring of individual components, shall be 12 gage minimum, type MTW or THW, 600 volts. Power wiring shall be 12 gage minimum.
    b. The ampacity of motor branch conductors and other power conductors shall not exceed the temperature rating of the connecting terminals. Wires shall be clearly numbered at each end in accordance with the electrical diagrams.
13. Wire Bundles: Wires connected to components mounted on the enclosure door shall be bundled and tied in accordance with good commercial practice.
14. Conduit
    a. Conduit requirements:
        1) All conduit and fittings shall be UL listed.
        2) Liquid-tight flexible metal conduit shall be constructed of smooth, flexible galvanized steel core with smooth, abrasion-resistant, liquid-tight polyvinyl chloride cover in accordance with ANSI 360.
        3) Conduit shall be supported in accordance with Articles 346, 347, and 350 of NFPA 70.
        4) Conduit shall be sized according to NFPA 70.
    b. Grounding:
        1) The pump control manufacturer shall provide a common ground bar mounted on the enclosure back plate. The mounting surface of the ground bar shall have any paint removed before making final connections.
        2) The contractor shall make the field connections to the main ground lug and each pump motor in accordance with NFPA 70.

c. Equipment Marking:

1) Permanent, corrosion-resistant nameplate(s) shall be attached to the equipment.

2) Control components shall be permanently marked using the same identification shown on the electrical diagram. Identification label shall be mounted adjacent to the device.

3) Switches, indicators, and instruments shall be plainly marked to indicate function, position, etc. Marking shall be mounted adjacent to and above the device.

I. Liquid Level Control

1. Functional Description: The level control system shall start and stop the pump motors in response to changes in wet well level, as set forth herein.
2. Type: The level control system shall be the submersible transducer type, containing a pressure sensor which extends into the wet well. The pressure sensor provides wet well level signals for the electronic pressure switch and the remainder of the level control system.
3. Sequence of Operation: The electronic pressure switch shall continuously monitor the wet well level, permitting the operator to read wet well level at any time. Upon operator selection of automatic operation, the electronic pressure switch shall start the motor for one pump when the liquid level in the wet well rises to the "pump start level." When the liquid is lowered to the "pump stop level," the electronic pressure switch shall stop this pump. These actions shall constitute one pumping cycle. (See Drawing G00146 for on-off level requirements.) These levels shall be adjustable as described below.
4. Automatic Pump Alternation: The level control system shall utilize the alternator relay to select first one pump, then the second pump, to run as lead pump for a pumping cycle. Alternation shall occur at the end of a pumping cycle.

5. Electronic Pressure Switch:
   a. The electronic pressure switch shall include integral components to perform all pressure sensing, signal conditioning, EMI and RFI suppression, DC power supply, and 120 volt outputs. Comparators shall be solid state and shall be integrated with other components to perform as described below.
   b. The electronic pressure switch shall be capable of operating in an ambient temperature range of -18 degrees C (0 degrees F) through +55 degrees C (131 degrees F). Control range shall be 0 to 12.0 feet of water with an overall repeat accuracy of ±0.1 feet of water.
   c. The electronic pressure switch shall consist of the following integral components: Pressure sensor, display, electronic comparators, and output relays.
6. Pressure Sensor: The pressure sensor shall be a strain gauge transducer designed to be submerged in the wet well. The sensor shall convert the wet well level to a proportional electrical signal for distribution to the display and electronic comparators. The pressure sensor shall be equipped with 26 feet of cable.
7. Display: The electronic pressure switch shall incorporate a digital panel meter which, upon operation selection, shall display liquid level in the wet well, and the preset start and stop level for both lead and lag pump. The meter shall be a 3-1/2-inch digit display calibrated to read out directly in feet of water, accurate to within 0.1 foot, with a full-scale indication of not less than 12 feet.
8. Electronic Comparators: Level adjustments shall be electronic comparator setpoints to control the levels at which the pumps start and stop. Each of the level settings shall be adjustable and accessible to the operator without opening the electronic pressure switch or any cover panel on the electronic pressure switch. Controls shall be provided to permit the operator to read the

selected levels on the display. Such adjustments shall not require hard wiring, the use of electronic test equipment, artificial level simulation, or introduction of pressure to the electronic pressure switch.

9. Output Relays: Each output relay in the electronic pressure switch shall be solid state.
10. Serviceability: The electronic pressure switch shall be equipped with replaceable plug-in integrated circuits, output relays, and fuses.
11. High Water Alarm: The electronic pressure switch shall be equipped with an additional electronic comparator and solid state output relay to alert maintenance personnel to a high liquid level in the wet well. In the event that the wet well liquid reaches a preset high water alarm level, the high water output relay shall energize a magnetic switch. The magnetic switch shall complete a 115 volt AC circuit for an external alarm device. An electrical or mechanical indicator, visible on the front of the control panel, shall indicate that a high wet well level exists. The magnetic switch shall maintain the alarm signal until the wet well level has been lowered and the circuit has been manually reset.
12. Spare Parts: The manufacturer shall supply one of each type integrated circuit and one output relay as spare parts.

J. Alarms

1. Alarm Light (External): A 115 volt AC alarm light with a red globe, conduit box, and mounting fixtures shall be provided. The light shall be shipped loose for field mounting by the Subcontractor.
2. Alarm Horn (External): A 115 volt AC weatherproof alarm horn with a conduit box and mounting fixtures shall be provided. The components shall be designed in such a manner as to permit mounting without water collecting in the horn. The horn shall be shipped loose for field mounting by the contractor.

3. Alarm Flasher: The alarm light circuit shall be equipped with a repeat cycle timer causing the alarm light to flash. Flash rate shall be approximately 1 second (1/2 second on and off).
4. Alarm Silence: An alarm silence pushbutton and relay shall be provided.

K. Air Bubbler System and Piping
1. Air Pumps:
   a. Two vibrating reed, industrial rated air pumps shall be furnished to deliver free air at a rate of approximately 5 cubic feet per hour and a pressure not to exceed 7 psi. Liquid level control systems utilizing air compressors will not be acceptable.
   b. A selector switch shall be furnished to provide manual alternation of the air pumps.
2. Air Bell: An air bell constructed of PVC 3 inches in diameter shall be provided for installation at the outlet of the air bubbler line in the wet well. The air bell shall have a 3/8-inch NPT tapped fitting for connection to the bubbler line.
3. Air Flow Indicator: An air flow indicator gauge shall be provided and connected to the air bubbler piping to provide a visual indication of rate of flow in standard cubic feet per hour.

L. STATION ENCLOSURE
1. Description: The station enclosure shall contain and enclose all valves and associated controls, and shall be constructed to enhance serviceability. Minimal requirements include the following:
   a. Two access panels shall be provided. Panels shall be sized and placed to permit routine maintenance operations through the panel openings of the enclosure. For these purposes, routine maintenance shall include frequently performed adjustments and inspections of the electrical components, controls, and valves.
   b. The access panels shall be provided with a hinge and latch. Hinge shall be the

continuous type. Latch shall engage the enclosure at not fewer than two places, and shall be protected by a keyed lock.

c. One access panel shall contain a screened vent to maximize air flow for enclosure ventilation.

d. Station enclosure, less base, shall be completely removable or able to be disassembled following the removal of re-usable tamper-proof hardware. After removal or disassembly, no portion of the enclosure shall project above the surface of the base to interfere with maintenance operations or endanger personnel.

e. Removal or disassembly of the enclosure shall be accomplished by not more than two maintenance personnel and without the use of lifting equipment.

2. Materials:

a. The station enclosure shall be manufactured of fiberglass suitable for use in a sewage lift station environment.

b. All interior surfaces of the housing shall be coated with a polyester resin-rich finish.

c. The outside of the enclosure shall be coated with a suitable pigmented resin, compounded to ensure long, maintenance-free life.

3. Enclosure Base:

a. Station base shall be constructed of precast, reinforced concrete bonded inside a fiberglass form covering top and sides, and shall be designed to ensure adequate strength to resist deformation of the structure during shipping, lifting, or handling. The enclosure base shall function at the wet well top and incorporate a duplex access lid, sized for the installation and removal of the specified pumps, and shall be of sufficient size to permit access to the wet well.

b. Color used shall de-emphasize the presence of dirt, grease, etc., and shall be provided with a non-skid surface.

520

4. Ventilation Blower: An exhaust blower shall be mounted in the roof of the enclosure. Blower capacity shall be sufficient to change station air a minimum of once every 2 minutes. Blower motor shall be operated automatically and shall be turned on at approximately 70 degrees F and shall be turned off at 55 degrees F. Blower motor and control circuit shall be protected by a thermal-magnetic air circuit breaker to provide overcurrent and overload protection. Blower exhaust outlet shall be designed to prevent the entrance of rain, snow, rocks, and foreign material.
5. Static Wet Well Vent: A static wet well vent shall be mounted in the station base and housed in the station enclosure. The station enclosure shall provide a transition area between the wet well and the vent outlet. The vent shall terminate through the station wall with a screened opening which shall be designed to prevent the entrance of rain, snow, rocks, and foreign material.
6. Cable Transition Adapter: The station base shall incorporate a cable transition adapter for the pump cables, level controls, and associated wiring. The adapter shall provide for a vapor-tight transition between the wet well and the lift station enclosure. The adapter shall incorporate cable grips for each cable and be provided with a gasket between the adapter and the station for a positive seal. Junction boxes shall not be considered for cable transition.
7. Station Heater: Pump station shall be provided with a 1300/1500 watt, 115 volt, thermostatically controlled, grounded electric heater.
8. Insulation Package: The pump station shall be equipped with a 1-inch-thick closed cell foam insulation, which shall be applied to the roof, walls, doors, and corner panels.
9. Hand Lamp: Pump station shall be provided with a 100- watt, 115-volt AC vapor-tight hand lamp with 25 feet of cord and grounding plug. Hand lamp shall be constructed of corrosion-resistant materials, and shall be equipped with a guard and

521

a clear globe. Ungrounded hand lamps may be supplied if provided with an effective means of double insulation.

M. Wet Well

1. The wet well shall be precast concrete. The precast barrel sections shall be in accordance with ASTM C478, with O-ring joints per ASTM C443. The barrel sections, bottom slab, and transition slab shall be reinforced to withstand earth pressures including the surcharge effects of a 16,000-pound wheel load located adjacent to the station.

N. Finish

1. Station Finish: All aboveground station piping, control panel, and exposed steel framework shall be cleaned with industrial grade chemical cleaner. The prime coat shall be a zinc-based synthetic primer. The finish coat shall be an automotive grade white acrylic enamel.

O. Manufacturer's Responsibilities

1. System Responsibility: To ensure system compatibility, all pumps, pump bases, station enclosure, station valving, pump controls, and level system shall be furnished by the pump manufacturer.
2. Operational Test:
   a. The pumps, motors, and controls shall each be given an independent operational test in accordance with the standards of the Hydraulic Institute. Recordings of the test shall constitute the correct performance of the equipment at the design head, capacity, and rated speed and horsepower as specified herein.
   b. Upon request from FERMCO, a FERMCO representative and/or a representative designated by FERMCO, shall be invited to witness the operational test at the manufacturer's facility or other location designated by the manufacturer.

522 [redacted]

3. Support Literature:
   a. The Subcontractor shall submit support literature from the pump manufacturer for the pump and all related equipment specified herein.
   b. Installation Instructions: Installation of pumping units shall be done in accordance with written instructions provided by the manufacturer.
   c. Operation and Maintenance Instructions:
      1) The pump manufacturer shall supply a complete set of comprehensive written instructions to enable an operator to properly operate and maintain the equipment supplied. Content of the instructions shall assume the operator is familiar with pumps, motors, piping, and valves, but that the operator has not previously operated and/or maintained the exact equipment supplied.
      2) The instructions shall be prepared as a system manual applicable solely to the pump equipment and related devices supplied by the manufacturer, as specified herein.
      3) The instructions shall include, but not be limited to, the following:
         a) Descriptions of, and operating instructions for, each major component of the complete pump package as supplied.
         b) Instructions on operation of the pump and pump controls in all intended modes of operation.
         c) Instruction for all adjustments which must be performed at initial start-up of pump equipment, adjustments required after the replacement of liquid level control system components, and adjustments as required in the course of preventative maintenance as specified by the manufacturer.

d) Service instructions for major components not manufactured by the pump package manufacturer, but supplied by the manufacturer in accordance with the specifications. In such case, the literature supplied by the actual manufacturer shall be incorporated as appendices.

e) Electrical schematic diagram of the pump and control package. Schematics shall illustrate, to the extent of authorized repair, pump motor branch, control and alarm system circuits, and interconnections among these circuits. Wire numbers shall be shown on the schematic. Schematic diagrams for individual components, not normally repairable by the station operator, need not be included, and details for such parts shall not be substituted for an overall system schematic. Partial schematics, block diagrams, and simplified schematics shall not be provided in lieu of an overall system diagram.

f) Layout drawing of the pump package as supplied, prepared in accordance with good commercial practice, showing the location of all submersible pumps, base plates, and guide rail assemblies.

4. Operation and maintenance instruction package.

PART 3 EXECUTION

3.1 FIELD CONDITIONS

A. Verify that proper power supply is available.

521

B. Verify that all piping is in place and all leak testing has been satisfactorily performed.

3.2 **ERECTION/INSTALLATION/APPLICATION**

A. Install in accordance with manufacturer's instructions.

B. Install in accordance with the requirements of NFPA 70.

C. All earthwork shall be performed in accordance with Section 02200.

D. All force main piping shall be installed in accordance with Section 02720.

E. The manufacturer shall provide installation supervision and start-up assistance. Service assistance shall be in accordance with the manufacturer's warranty.

END OF SECTION

SECTION 02831
CHAIN LINK FENCES

PART 1 GENERAL

1.1 SECTION INCLUDES

A. Fence framework, fabric, and accessories.

B. Excavation for post bases; concrete foundation for posts and center drop for gates.

C. Specification applies to fence repair needed as a result of Subcontractor's construction or demolition activities.

1.2 RELATED SECTIONS

A. Section 01010 - General Requirements.

B. Section 01011 - Submittals

C. Section 02200 - Earthwork.

1.3 REFERENCE DRAWINGS

A. See Section 01012 for the Schedule of Drawings.

1.4 REFERENCES

A. American Society for Testing and Materials (ASTM):

1. ASTM A121-86 — Standard Specification for Zinc-Coated (Galvanized) Steel Barbed Wire.
2. ASTM A123-89a — Standard Specification for Zinc (Hot Dip Galvanized) Coatings on Iron and Steel Products.
3. ASTM A153-82 — Standard Specification for Zinc Coating (Hot-Dip) on Iron and Steel Hardware.

4.	ASTM A392-91	Standard Specification for Zinc-Coated Steel Chain-Link Fence Fabric.
5.	ASTM A570-92	Standard Specification for Hot-Rolled Carbon Steel Sheet and Strip - Structural Quality.
6.	ASTM C94-Rev. A-92	Standard Specification for Ready-mixed Concrete.

1.5 SYSTEM DESCRIPTION

A. Fence Height: 7 feet nominal with barbed wire 1 foot high on extension arms as indicated on drawings.

B. Line Post Spacing: At intervals not exceeding 10 feet.

1.6 QUALITY ASSURANCE PROGRAM

A. Qualifications:

1. Manufacturer: Company specializing in manufacturing the products specified in this section with minimum 3 years documented experience.

1.7 DELIVERY, STORAGE, AND HANDLING

A. Material shall be stored at a location directed by FERMCO.

1.8 SUBMITTALS

A. Provide submittals as required by Section 01011.

B. Shop Drawings: Indicate plan layout, spacing of components, post foundation dimensions, hardware anchorage, and schedule of components.

C. Product Data: Provide data on fabric, posts, accessories, fittings, and hardware.

4527

D. Certificate of Conformance: Manufacturer certifies that supplied products meet or exceed specification requirements.

E. As-Built Drawings: Indicate plan layout, size, type, and swing of gates.

PART 2 PRODUCTS

2.1 MATERIALS

A. Framing (Steel): ASTM A570; hot rolled steel strip, cold formed to pipe configuration, longitudinally welded construction, minimum yield strength of 50 ksi.

B. Fabric Wire (Steel): ASTM A392 zinc-coated, 9-gage wire fabric.

C. Barbed Wire: ASTM A121 galvanized steel; 12-gage wire, three strands, four points at 5 inches on center.

D. Concrete: ASTM C94; normal Portland cement, 3,000 psi strength at 28 days, 3-inch slump; 1-1/2 inch nominal sized coarse aggregate as specified in Section 03001.

E. Components:
1. Corner and Terminal Posts: 2-7/8 inch, outside diameter.
2. Top and Brace Rail: 1-5/8 inch, outside diameter, plain end, sleeve coupled.
3. Fabric: 2-inch diamond mesh interwoven wire, 9 gage thick, top selvage twisted tight, bottom selvage knuckle end closed.
4. Tension Wire: 6-gage galvanized steel, single strand.
5. Tie Wire: 6-gage galvanized steel wire.
6. Line Post, gate post.

2.2 ACCESSORIES

A. Caps: Cast steel galvanized; sized to post diameter, set screw retainer.

B. Fittings: Sleeves, bands, clips, rail ends, tension bars, fasteners and fittings; galvanized steel.

C. Extension Arms: Cast steel galvanized, to accommodate three strands of barbed wire, single arm, sloped to 45 degrees up from horizontal.

D. Finishes:
1. Components and Fabric: Galvanized to ASTM A123; 2.0 ounces/square feet coating.
2. Hardware: Galvanized to ASTM A153, 2.0 ounces/square feet coating.
3. Accessories: Same finish as framing.

PART 3 EXECUTION

3.1 ERECTION/INSTALLATION/APPLICATION

A. Install framework, fabric, accessories, and gates in accordance with the manufacturer's instructions.

B. Set all posts plumb in concrete footings with top of footing 2 inches above finish grade. Slope top of concrete for water runoff.

C. All post footing depth below finish grade is 3 feet, 6 inches.

D. Brace corner post to adjacent line post with horizontal center brace rail and diagonal truss rods. Install brace rail, one bay from end.

E. Provide top rail through line post tops and splice with 6-inch long rail sleeves.

F. Stretch fabric between terminal posts or at intervals of 100 feet maximum, whichever is less, as per manufacturer's recommendations.

G. Position bottom of fabric 2 inches above finished grade.

H. Fasten fabric to top rail, line posts, braces, and bottom tension wire with tie wire at maximum 15 inches on centers.

I. Attach fabric to end and corner posts with tension bars and tension bar clips.

J. Install bottom tension wire stretched taut between terminal posts, as per manufacturer's recommendations.

K. Install support arms sloped outward and attach barbed wire; tension and secure.

L. Install grounding as shown on Detail 1 Drawing No. G00207.

3.2 ADJUSTING

A. Maximum Variation From Plumb: 1/4 inch.

B. Maximum Offset From True Position: 1 inch.

END OF SECTION

SECTION 02900
SOIL PREPARATION AND SEEDING

PART 1 GENERAL

1.1 SECTION INCLUDES

A. Seeding and mulching to stabilize disturbed areas.

B. Maintenance of seeded areas until final acceptance of contract work.

1.2 RELATED SECTIONS

A. Section 01010 - General Requirements.

B. Section 01011 - Submittals.

C. Section 02110 - Site Clearing.

D. Section 02200 - Earthwork.

E. Section 02720 - Site Drainage.

1.3 REFERENCE DRAWINGS

A. See Section 01012 for the Schedule of Drawings.

1.4 REFERENCES

A. State of Ohio, Department of Transportation (ODOT), Construction and Material Specifications, January 1, 1995.

1. Except as supplemented or otherwise modified herein and/or shown on the construction drawings, the entire work under this section shall be in compliance with the provisions of ODOT.

1.5 SUBMITTALS

A. Provide submittals as required by Section 01011.

B. Maintenance Data: Submit maintenance instructions for seeded areas including:
1. Grass Seed: Types, application, cutting method, and maximum grass height.
2. Soil Nutrients: Types, frequency, and recommended coverage.
3. Soil Conditioners: Type and recommended coverage.

C. Certificates: Provide written certification from supplier of seed to state that the seed delivered to the project complies with the following:
1. Seed varieties and mixture comply with requirements of the specifications.
2. Purity and germination rate comply with the requirements of the specifications.

D. Product Data:
1. Filter fabric catalog data and sample.
2. Mulch for seeding.

1.6 DELIVERY, STORAGE, AND HANDLING

A. Deliver grass seed mixture in original, sealed containers. Seed in damaged packaging will not be accepted. Containers shall show:
1. Names and percentage of each seed variety.
2. Year of production, percentage of purity, minimum germination rate, and date of packaging.
3. Net weight.

B. Deliver plant nutrients and soil conditioners in waterproof bags showing weight, chemical analysis, and name of manufacturer.

C. Store materials in a dry area, free from wetting and physical damage.

1.7 MAINTENANCE

A. Seed Areas:
1. Mowing: Prior to acceptance, the Subcontractor shall be responsible for mowing all grass to a height of 3 inches when the grass has reached a

height of 5 inches. Seeded areas shall be cut at least three times, none of which shall be closer than 10 days apart.

2. Apply plant nutrients as required in recommendations of agricultural authority such as the Soil Conservation Service.
3. Water to prevent grass and soil from drying out.
4. Immediately re-seed areas that show bare spots. Fill in washed-out areas with topsoil and re-seed.

B. Removal of Sedimentation Accumulation:

1. Remove accumulated sediments when sediment is greater than one-half the height of the control measure, and at project completion.

PART 2 PRODUCTS

2.1 MATERIALS

A. Seed

1. Seed Mixture: Permanent seeding
   a. 40 percent Kentucky Bluegrass (POA Pratensis).
   b. 40 percent Kentucky Fescue (Festuca Rubra).
   c. 20 percent Annual Ryegrass (Lolium Multiflorum).
2. Mixture shall be clean, guaranteed 95 percent pure, and have a minimum germination rate of 85 percent within 1 year of test.

B. Soil Materials

1. Topsoil: Excavated and re-used material; graded; free of roots, rocks larger than 1/2 inch, subsoil, debris, weeds, and foreign matter not suitable for subsequent seeding operations and maintenance; conforming to ASTM D2487 Group Symbol OH. When feasible, topsoil shall be salvaged from the work area and stockpiled for re-use.

C. Soil Conditioners

1. Lime:
   a. Lime shall meet the requirements of ODOT Item 659.02.

b. Agricultural ground limestone, with a minimum total neutralizing power (TNP) of 90 percent, at least 40 percent passing a No. 100 sieve, and at least 35 percent passing a No. 8 sieve, is considered to be standard grade. This grade is applied at a 100 percent standard application rate of 2,000 pounds per acre subject to the approval of FERMCO. Other grades of agricultural liming materials may be used. Apply substitute material at rates which are dependent on the TNP and sample fineness.

D. Plant Nutrients

1. Fertilizer:

a. Fertilizer shall meet the requirements of ODOT Item 659.08.

b. The standard application of fertilizer shall be at the rate of 20 pounds per 1,000 square feet of 12-12-12. Another analysis, in the same ration, may be used by varying the application rate to produce the same values specified. Either dry or liquid fertilizer may be used and shall be distributed in an even pattern over the specified area, then thoroughly disked, harrowed, or raked into the soil to a depth between 2 and 4 inches.

2.2 ACCESSORIES

A. Mulch:

1. Mulch shall meet the requirements of ODOT Item 659.06.

2. Materials used for mulching shall be straw or hay. They shall be reasonably free of weed seed and such foreign materials as may detract from their effectiveness as a mulch or injure desired plant growth.

PART 3 EXECUTION

3.1 FIELD CONDITIONS

A. Prepare subsoil to eliminate uneven areas and low spots. Maintain lines, levels, profiles, and contours. Make changes in grade gradual. Blend slopes into level areas.

B. Remove debris, weeds, and undesirable plants and their roots. Remove contaminated subsoil.

C. Scarify subsoil to a depth of 3 inches where topsoil is to be placed.

D. Repeat cultivation in areas where equipment used for hauling and spreading of topsoil has compacted subsoil.

3.2 ERECTION/INSTALLATION/APPLICATION

A. Application of Soil Conditioners:
1. Apply lime conditioners at the rate specified in Article 2.1, Paragraph B, Subparagraph 1.b., or as determined by soil test.
2. Mix thoroughly into the top 2 inches of the topsoil.

B. Application of Plant Nutrients:
1. Apply fertilizer at the rate specified in Article 2.1, Paragraph D, Subparagraph 1.b.
2. Apply after smooth raking of topsoil, and prior to roller compaction.
3. Mix thoroughly into upper 2 inches of topsoil.
4. Lightly water to aid the distribution of fertilizer.

C. Seeding:
1. When applying seed with a mechanical spreader, apply evenly in two intersecting directions. Rake in lightly. Apply at a minimum rate of 3 pounds per 1,000 square feet.
2. Do not seed areas in excess of that which can be mulched on same day.

3. Apply seed mixture as follows:
   a. All seeding performed between October 15 and March 15 shall be temporary seeding in accordance with ODOT Item 207.
   b. Permanent seeding may be performed at any time with permission of FERMCO.
4. Lightly roll seeded area.
5. Immediately following seeding and compacting, apply mulch.
6. Apply water with a fine spray immediately after each area has been mulched. Saturate soil to approximately 4 inches deep.

3.3 QUALITY CONTROL

A. Subcontractor shall notify FERMCO at least 24 hours prior to date of anticipated inspection.
   1. To qualify for acceptance, an area shall have a good, clean stand of perennial grass.
   2. Coverage shall be at least 95 percent of the area, and no bare spots shall exceed 3 square feet.
   3. Areas that fail to meet requirements of the specifications shall be repaired or re-seeded as necessary to produce an acceptable stand of grass.

B. Excess debris and waste generated as a result of the work shall be containerized by the Subcontractor as described in Part 6, Statement of Work, of the Invitation for Bid.

3.4 PROTECTION

A. Seed Protection:
   1. Apply protection as necessary to retain soil and plant material.
   2. Cover seeded slope area with mulch. Cover ditch lines with matting.
   3. Where slope is steeper than 3 horizontal to 1 vertical, replace mulch with matting.
   4. Mulch:
      a. Mulch seeded area with straw mulch. Spread mulch at a rate of not less than 2 tons per acre.

536

b. Apply by hand, by mechanical spreaders, or by blowers.

5. Matting:

a. Roll matting onto slopes or along ditch lines without stretching or pulling.

b. Lay matting smoothly on surface, and bury top end of each section in 6-inch-deep excavated topsoil trench.

c. Provide 12-inch overlap of adjacent rolls.

d. Rake smooth, level with adjacent soil.

e. Secure outside edges and overlap with staples at a maximum interval of 36 inches. Intermediate staples shall be spaced at a maximum interval of 5 feet.

f. Lightly dress slopes with topsoil to ensure close contact between matting and soil.

g. At sides of ditches, lay matting laps in direction of water flow.

END OF SECTION

SECTION 03001
CONCRETE

PART 1 GENERAL

1.1 SECTION INCLUDES

A. Concrete work for foundations, slabs, walls, equipment supports, and other miscellaneous concrete.

B. Formwork and accessories.

C. Reinforcement and accessories.

D. Cast-in-place concrete, grout, and accessories.

E. Finishing and curing.

F. Sampling and testing of concrete work by an independent testing laboratory.

1.2 RELATED SECTIONS

A. Section 01010 - General Requirements.

B. Section 01011 - Submittals.

C. Section 02200 - Earthwork.

D. Section 02667 - Site Water Lines.

1.3 REFERENCE DRAWINGS

A. See Section 01012 for the Schedule of Drawings.

1.4 REFERENCES

A. American Concrete Institute (ACI):

1. ACI 301-89 Specifications for Structural Concrete for Buildings.
2. ACI 305R-91 Hot Weather Concreting.
3. ACI 306R-88 Cold Weather Concreting.

4.	ACI 318/318R Rev. 92	Building Code Requirements for Reinforced Concrete.
5.	ACI SP-66-94	ACI Detailing Manual.

B. American Society for Testing and Materials (ASTM):

1.	ASTM A615-A615M-94	Deformed and Plain Billet-Steel Bars for Concrete Reinforcement.
2.	ASTM C31-91	Standard Practice for Making and Curing Concrete Test Specimens in the Field.
3.	ASTM C33-93	Concrete Aggregates.
4.	ASTM C39-94	Standard Test Method for Compressive Strength of Cylindrical Concrete Specimens.
5.	ASTM C94-94	Ready Mixed Concrete.
6.	ASTM C109 Rev. A-94	Standard Test Method for Compressive Strength of Hydraulic Cement Mortars.
7.	ASTM C143 Rev. A-90	Standard Test Method for Slump of Hydraulic Cement Concrete.
8.	ASTM C150 Rev. B-94	Portland Cement.
9.	ASTM C157-93	Standard Test Method for Length Change of Hardened Hydraulic Cement Mortar and Concrete.
10.	ASTM C231 Rev. B-91	Standard Test Method for Air Content of Freshly Mixed Concrete by the Pressure Method.
11.	ASTM C260-94	Air-Entraining Admixtures for Concrete.
12.	ASTM C309-94	Liquid Membrane-Forming Compounds for Curing Concrete.
13.	ASTM C311 Rev. B-94	Standard Test Methods for Sampling and Testing Fly Ash or Natural Pozzolans for Use as a Mineral Admixture in Portland Cement Concrete.
14.	ASTM C494-92	Chemical Admixtures for Concrete.

15.	ASTM C618 Rev. A-94	Coal Fly Ash and Raw or Calcined Natural Pozzolan for Use as a Mineral Admixture in Portland Cement Concrete.
16.	ASTM C882-91	Standard Test for Bond Strength of Epoxy-Resin Systems Used with Concrete by Slant Shear.
17.	ASTM C920-94	Elastomeric Joint Sealants.

1.5 SUBMITTALS

A. Submittals shall be in accordance with Section 01011.

B. Shop Drawings: Indicate reinforcing bar sizes, spacings, locations, quantities, bending and cutting schedules, placing drawings, and supporting and spacing devices.

C. Product Data: Concrete mix designs, including documentation of aggregate sources and most recent sieve analysis. Sieve analyses must not be older than 1 year.

D. Concrete Supplier: Name and address of the transit-mix concrete supplier. Supply typical batch ticket and history per ASTM C94.

E. Test Reports: Submit test reports for all tests required under field quality assurance.

1.6 QUALITY ASSURANCE PROGRAM

A. ACI 301: References are made to ACI 301 to abbreviate text of this section. Only those portions of ACI 301 referred to specifically in this section shall apply.

B. Amend Subparagraph 1.3.1 of ACI 301 to change the following titles to read (wherever they occur in ACI 301):

ACI 301	Change To Read
Architect/Engineer	FERMCO
Owner	FERMCO

C. Formwork shall be in accordance with Chapter 4 of ACI 301 unless specified otherwise in this section.

D. Perform concrete reinforcing work in accordance with Chapter 5 of ACI 301, unless specified otherwise in this section.

E. Perform cast-in-place concrete work in accordance with Chapters 7, 8, 10, 11, and 12 of ACI 301, unless specified otherwise in this section.

1.7 DELIVERY, STORAGE, AND HANDLING

A. Reinforcing bars shall be delivered to meet the construction schedule and stored as directed by the FERMCO Construction Manager.

B. Tags: Reinforcing bar tags shall be made of durable material and marked in a legible manner with waterproof markings; not less than one tag per bundle, attached by wire. Identification tags shall show the grade, number of pieces, size, and mark or length of bars.

PART 2 PRODUCTS

2.1 MATERIALS

A. Plywood Forms: Not less than 5/8-inch-thick, 5-ply Douglas fir plywood conforming to PS 1, and as manufactured by a member of the American Plywood Association; B-B Plyform, Class I, Exterior-APA, with plyform faces sanded and oiled.

B. Prefabricated Type Forms: Matched, tight fitting, stiffened to support weight of concrete.

C. Form Release Agent: Colorless mineral oil which will not stain concrete nor impair natural bonding characteristics of subsequent coatings.

D. Reinforcing Steel: ASTM A615, 60 ksi yield grade; deformed billet steel bars; plain finish.

E. Tie Wire: Minimum 16-gage annealed type wire.

F. Chairs, Bolsters, Bar Supports, Spacers: Sized and shaped for strength and support of reinforcement during concrete placement conditions.

G. Fabrication: Fabricate concrete reinforcing in accordance with ACI SP-66 and Chapter 7 and 12 of ACI 318.

H. Cement:
1. Normal, Portland cement, conforming to requirements of ASTM C150, Type I.

I. Fly Ash:
1. Class F, conforming to requirements of ASTM C618 and ASTM C311.

J. Admixtures:
1. Air Entrainment: Conforming to ASTM C260.
2. Water Reducing and Retarding: Conforming to requirements of ASTM C494.

K. Aggregates:
1. Normal Weight Concrete: Conforming to requirements of ASTM C33.
2. Maximum aggregate size: 1 inch.

2.2 ACCESSORIES

A. Chamfer Strips: Chamfered, wood strip type; 3/4 by 3/4-inch size.

B. Nails, Spikes, and Anchorages: Sized as required and of sufficient strength and character to maintain formwork in place while placing concrete.

C. Form Ties: Removable or snap-off type; designed to prevent form deflection; of adjustable length, cone type, with waterproofing washer; and free of defects that could leave holes larger than 1 inch in concrete surface.

D. Joint Sealer: Elastomeric joint sealant conforming to ASTM C920; Type S or Type M, Grade P, Class 25.
   1. Acceptable products and suppliers (or equal):
      a. Sikadur 51 SL, by Sika Corp.
      b. Sonolastic SL-1, by Sonneborn Building Products.

E. Patching Grout: Premixed, nonshrink epoxy grout, capable of developing minimum compressive strength of 3,000 psi in 24 hours, conforming to ASTM C109. The grout must not shrink or expand more than 5 percent when tested in accordance with ASTM C157 and achieve a minimum bond strength of 1,200 psi in 24 hours when tested in accordance with ASTM C882.

F. Bonding Agent: Polyvinyl acetate polymer or acrylic polymer, water resistant when cured.

G. Curing Compound: Conforming to the requirements of ASTM C309, clear; must not impair natural bonding characteristics of subsequent coatings.

2.3 FABRICATION

A. General: All concrete used in the work shall be composed of Portland cement, fine and coarse aggregate, and the specified admixtures. Design mixes shall be submitted to FERMCO for approval before any concrete is placed. Concrete for every part of the work shall be of homogeneous structure which, when hardened, will have the required strength and resistance to weathering. The proportions for all concrete shall be such as to produce a mixture which will work readily into the forms and around reinforcement with the method of placing employed on the work, but without permitting the materials to segregate.

543

B. Mix Proportions:

1. The following mix designs shall be used for cast-in-place concrete.

   a. Walls and Foundations

Specified Strength (28 days):	3,000 psi
Total Air Content:	5 ± 1-1/2 percent
Specified Slump:	4 inches ± 1 inch
Maximum Aggregate Size:	1 inch
Maximum Water/Cement Ratio:	0.46 (per ACI 318, Section 5.4)

   Water Reducing and retarding admixtures as required per ASTM C494.

2. The work has been designed for concrete having a minimum compressive strength at 28 days as determined by ASTM C39. The water/cement ratio shall be determined by consideration of the specified strength, the water reducing admixtures, the slump required for proper placement, air entraining requirements, the maximum allowable aggregate size and its specific gravity, the fineness modulus of the fine aggregate and its specific gravity, and the amount of water carried on the aggregates. The mix designs shall be proportioned in accordance with ACI 318, Section 5.3 or Section 5.4.

3. The proportions of all materials in the concrete shall be subject to review by FERMCO. The Subcontractor shall provide all plant and equipment necessary to determine and control the actual proportions of materials entering the batch. Slumps shall be recorded for each trial batch.

C. Water Content: In calculating the total water content in any mix, the amount of water carried on the aggregate shall be included. The water on the aggregate shall be determined periodically by test, and the amount of free water on the aggregate shall be subtracted from the water allowed in the mix. In all cases, the amount of water to be used shall be the

minimum amount required to produce a plastic mixture of the specified strength and slump.

D. Mixing and Delivery: Mixing and delivery of concrete shall be scheduled so that all concrete placing operations can be completed within 1-1/2 hours or before the drum has revolved 300 revolutions, whichever comes first, after introduction of mixing water to cement and aggregates, in accordance with Section 11 of ASTM C94. When air temperature has fallen to or is expected to fall below 40 degrees F, the recommendations for cold weather concreting contained in ACI 306R shall be followed. When the air temperature exceeds 90 degrees F, the recommendations for hot weather concreting contained in ACI 305R shall be followed.

PART 3 EXECUTION

3.1 PREPARATION

A. Erect formwork and bracing to achieve design requirements in accordance with requirements of Chapter 4 of ACI 301.
   1. Provide bracing to ensure stability of formwork.
   2. Align joints and make watertight. Keep number of form joints to a minimum.
   3. Provide chamfer strips on external corners of permanently exposed edges.
   4. Shore or strengthen formwork subject to overstressing by construction loads.

B. Application - Form Release Agent: Apply form release agent on formwork in accordance with manufacturer's instructions.
   1. Apply prior to placement of reinforcing steel, anchoring devices, and embedded items.
   2. Keep surfaces coated prior to placement of concrete.

C. Form Cleaning: Clean and remove foreign matter within forms as erection proceeds.
   1. Clean formed cavities of debris prior to placing concrete.
   2. Flush with water or use compressed air to remove remaining foreign matter.
   3. Ensure that water and debris drain to exterior.
   4. During cold weather, remove ice and snow from within forms. Do not use de-icing salts or water to clean out forms.

D. Tolerances: Construct formwork to maintain tolerances required by ACI 301, Section 4.3.

E. Form Removal: Forms or bracing shall not be removed until concrete has gained sufficient strength to carry its own weight and imposed loads.
   1. Loosen forms carefully.
   2. Do not wedge with pry bars, hammers, or tools against finished concrete surfaces.

F. Preparation for Grouting:
   1. To ensure proper bond to concrete, all grease, oil, dirt, and other deleterious materials shall be completely removed.
   2. Roughen the surfaces by chipping, sandblasting, or other mechanical means to ensure bond of the grout to the existing concrete.
   3. After concrete surfaces have been washed clean, they shall then be saturated with water for 24 hours prior to placement of cement-based grout.
   4. Upon completion of saturation period, excess water shall be removed prior to grouting.

3.2 ERECTION/INSTALLATION/APPLICATION

A. Place, support, and secure reinforcement against displacement. Do not deviate from required position. Make electrical ground system connection where required by Section 16170.

B. Maintain concrete cover around reinforcing according to the requirements of Chapter 5 of ACI 301 and Chapter 7 of ACI 318, and as shown on construction drawings.

C. Provide formed openings where required for work to be embedded in concrete members.

D. Coordinate work of other sections in forming and setting openings, slots, recesses, sleeves, bolts, anchors, and other inserts.

E. Install concrete accessories straight, level, and plumb or as called out on the construction drawings.

F. Place concrete continuously between forms or other limits indicated on the construction drawings.
   1. Place concrete in accordance with Chapter 8 of ACI 301 and Chapter 5 of ACI 318.
   2. Notify FERMCO a minimum of 24 hours prior to commencement of operations.
   3. Ensure that reinforcement and forms are not disturbed during concrete placement.

G. Maintain records of concrete placement. Record date, location, quantity, air temperature, and test samples taken.

H. Installation of Grout:
   1. Follow the manufacturer's instructions for mixing, placing, and curing of grout.

3.3 QUALITY CONTROL

A. Testing: The Subcontractor shall pay and provide for services of an independent testing agency. The Subcontractor shall deliver test specimens to the testing agency. The agency shall perform field tests (take slumps, air, and cylinders) and shall perform laboratory tests on the specimens. Concrete testing shall be performed in accordance with Chapter 16 of ACI 301 for each 50 cubic yards, or fraction thereof, of each mix design placed in any 1 day.

1. Slump Tests: ASTM C143. One sample for each strength test.
2. Air Content Tests: ASTM C231. One sample for each strength test.
3. Test Cylinders: ASTM C31. One set of three cylinders for above quantities.
4. Compressive Strength: ASTM C39. One specimen tested at 7 days and two specimens tested at 28 days.

3.4 PROTECTION

A. Provide concrete curing and protection in accordance with Chapter 12 of ACI 301.
   1. Apply floor slab curing compound, where used, in accordance with the approved manufacturer's recommendations.

B. Provide finishes for formed concrete surfaces as defined in Chapter 10 of ACI 301.

C. Provide finishes and tolerances for slabs in accordance with Chapter 11 of ACI 301.
   1. Provide troweled finish with Class A tolerance on all exposed slabs.

END OF SECTION

2038

Utility Requirements

225

2038

Estimate of Utility Requirements for Proposed Remedial Facilities for OU1 Remediation

Operable Unit 1
Project Order 145

March 1996
Revision F

Environmental Remedial Action Project
Fernald Environmental Management Project
Fernald, Ohio
FERMCO Subcontract No. 2-21487

PARSONS

25 Merchant Street
Cincinnati, Ohio 45246

549

2038

Estimate of Utility Requirements for Proposed Remedial Facilities for OU1 Remediation

CONTENTS

SECTION

1.0 Basis of Estimate 1

2.0 Estimate Qualification 1

3.0 Utilities Identified for the OU1 Remedial Facilities 2

4.0 Estimates of Utility Requirements 3

4.1 Electrical Power 3

4.2 Treated Process Water 3

4.3 Fire Protection Water 4

4.4 Natural Gas 4

4.5 Plant Air 5

4.6 Wastewater 5

550

LIST OF ACRONYMS AND ABBREVIATIONS

AWWT	Advanced Wastewater Treatment Plant
BSL	Biodenitrification Surge Lagoon
CFC	Certified for Construction
cfm	cubic feet per minute
FEMP	Fernald Environmental Management Project
gpm	gallons per minute
hp	horsepower
kVA	kilovolt ampere
kW	kilowatt
NPDES	National Pollutant Discharge Elimination System
OU	Operable Unit
scfm	standard cubic feet per minute
V	volt
WAC	Waste Acceptance Criteria

557

Estimate of Utility Requirements for Proposed Remedial Facilities for OU1 Remediation

For general information, the following estimates of utility requirements have been prepared for the proposed Operable Unit 1 (OU1) remediation facilities. These estimates will be updated periodically as new information is developed and design work progresses.

However, the information for the fire protection water requirements has been used in the design of the fire protection water line included with the Certified for Construction (CFC) Site Improvements Plan (issued Revision 0 in February 1996). Also, the system to handle the stormwater associated with the new process area is being installed with the February 1996 site improvements package, so that quantity estimate has been used in the design of that system.

All remaining utilities will be included with the final construction packages planned for late 1996. Those utilities will be aboveground, and estimates for those requirements will continue to be updated as necessary.

1.0 BASIS OF ESTIMATE

The basis for these estimates is the pre-final design for the remedial facilities, as shown and described by the following design documents:

1) Preliminary Site Plan (Rev. B, March 1996)
2) Preliminary Utility Plan (Rev. B, March 1996)
3) Process Flow Diagrams (the five PFDs are at different revisions; D, E, F, and G, March 1996)
4) Block Flow Diagram - OU1 Water Balance (Rev. C, March 1996)
5) General Arrangement Drawings (Rev. E, March 1996)
6) Process Description (Rev. F, March 1996)
7) Design Criteria Document (Rev. 1, March 1996)

An allowance for additional utility requirements for potential future process expansion (adding a second dryer) and processing enhancements (such as product densification) is also included. Where appropriate, utilities estimates are increased by approximately 25 percent to allow for potential process enhancements.

2.0 ESTIMATE QUALIFICATION

The utility estimates will be refined as design of the OU1 remedial facilities progresses. Estimates of the amount of waste drying (and hence, natural gas requirements) and water recovery from the waste (for transfer to the FEMP wastewater treatment system) are dependent on waste moisture content. These

waste moisture data have recently been updated from final Dewatering and Excavation Evaluation Program test results. Process flow mass balance information for these updated waste data and on-going mass balance determinations will lead to further refinement of the estimates. Estimates of use for other utilities will be updated as necessary as engineering progresses.

3.0 UTILITIES IDENTIFIED FOR THE OU1 REMEDIAL FACILITIES

The following utilities and transfers of wastewater flows are required to support the OU1 remedial facilities:

1) Electrical power

2) Treated (process) water

3) Fire protection water

4) Natural gas

5) Plant air (not tied to the Fernald Environmental Management Project [FEMP] air system)

6) Pit dewatering effluent (storm and waste drainage water pumped to the Clearwell)

7) Process-related waste drainage and drying water (wastewater - pumped to the Biodenitrification Surge Lagoon)

8) Facility area stormwater (potentially contaminated water - pumped to the Biodenitrification Surge Lagoon)

No lavatories or change areas are included in the immediate area of the remedial waste processing facilities, so potable water supply and a sanitary sewer to the waste processing facilities are not included. A new OU1 changeout facility with restrooms and showers to support construction and operation of the remedial facilities has recently been completed and is expected to meet all WPRAP personnel sanitation needs. That changeout facility and other support trailers are located north of the lime sludge ponds and are shown on the Site Plan (Sketch SK-G-04164) accompanying the general arrangement drawings.

Required eyewash, drinking water stations, and emergency showers in the waste processing facilities area are supplied by bottled or other portable stored water supply.

553

4.0 ESTIMATES OF UTILITY REQUIREMENTS

4.1 Electrical Power

Anticipated motor load (primarily from shredding, drying, off-gas and air handling requirements) for the remedial facilities is conservatively estimated at 1200 horsepower (HP). Allowing for a future second dryer and off-gas treatment system and other minimal project expansion, future total loads are estimated at 1500 HP. A unit substation, rated 1500/2000 kVA, 13.2 kV - 480 V for the process shredder, and a second unit substation, rated 2000/2667 kVA, 13.2 kV-480 V will serve the initial installation. Should the second dryer and other features be added, another 1500/2000 kVA unit substation is required. These loads can be served from feeders F4B and F1B available for tapping at manhole 247 (assuming that the OU4 Fernald Residues Vitrification Plant is not served from these feeders). A 500 kW, 480 V, three phase standby diesel generator is anticipated for each of the initial and future installations.

4.2 Treated Process Water

Treated water, obtained from the existing FEMP system, is required for the following uses:

1) Debris washing at pitside
2) Debris washing in the waste preparation area
3) Truck washing in the waste preparation area
4) Dust control at various locations in the waste preparation and waste loadout area
5) Scrubber makeup water
6) Cooling tower makeup water
7) Railcar exterior decontamination washdown
8) General cleanup (washing) at various locations in the waste processing area

Scrubber makeup water and cooling tower water makeup are each estimated at approximately 40 gallons per minute (gpm). All dust control, washing, and decontamination are intermittent, low-flow streams. Assuming that these uses (other than scrubber and cooling tower makeup) average 5 gpm each, and assuming the unlikely event that they occur simultaneously, the maximum total demand is approximately 100 gpm. Doubling this to allow for possible later expansion results in approximately 200 gpm maximum demand.

Whenever possible, recovered water and recycling are used to meet part of this need to minimize the required treated water supply and associated discharge of wastewater. For example, condensate water will be suitable for re-use for dust control. Additional water balance study and continuing mass balance determinations will lead to further refinement of these estimates. Overall water balance information,

including recycle estimates, is presented in the *Process Description for the Remediation System Design* and on Block Flow Diagram SK-F-04084.

Present plans are to tap a proposed TW (process water) line at the Advanced Wastewater Treatment Plant (AWWT) to provide flow for remaining water needs not met through recycle.

4.3 Fire Protection Water

The following description applies to the design, build, and operate concept. The Alternative Remedial Action Subcontracting Approach (ARASA) Contractor will be required to provide similar in-place fire protection.

The supply of fire protection water for building sprinklers and outside hydrants is assumed to only be necessary for the mechanical utilities/control room building, the enclosures at both ends of the dryer, and for key process equipment. There is no provision for sprinklers or a fire water loop (fire protection group has assessed that facility is close enough to existing loops) and hydrants around the waste preparation area or the blending and loadout area.

A fire water line is extended to the protected facilities with hydrants placed at 400-foot maximum intervals and at appropriate locations around the facilities (at least 2 hydrants within 300 feet of facilities, remotely located). A worst case scenario of two buildings, ordinary Group 2 occupancy hazard, with 0.15 gpm per square foot per 4,000 square feet sprinkler density/group, and 250 gpm per hose stream, is assumed. These requirements result in an estimated water demand of approximately 850 gpm per protected area (1,700 gpm total) for fire protection purposes.

4.4 Natural Gas

Current information indicates the maximum practical drying capacity for an indirect rotary dryer is approximately 4.2 tons of water evaporated per hour. At this maximum drying rate approximately 350 standard cubic feet per minute (scfm) of natural gas is required. This estimate is based on the METSIM™ calculation for drying Pit 3 waste. Gas flow is shown on PFD Sketch SK-F-03911 and the associated mass balance tables. Allowing for two dryers and including a small contingency increases the natural gas requirement to approximately 800 scfm.

Electric space heating is expected to be used where building heating is necessary. No other requirement for natural gas has been identified.

555

4.5 Plant Air

This system is included to meet maintenance and other miscellaneous needs. Installing a dedicated air compressor is more practical than tying to the FEMP air system. For estimating purposes, a 30 cubic feet per minute (cfm) supply at 100 pounds per square inch pressure is assumed adequate to meet these minimal needs.

Additional needs for compressed air may include process-related, pneumatically operated pumps, valves, and instruments. As these potential needs are identified during detailed design, the compressed air requirement may increase.

4.6 Wastewater

Wastewater generated by the OU1 remediation activities is treated at the FEMP wastewater treatment system prior to discharge to the Great Miami River via manhole 176B. The FEMP National Pollutant Discharge Elimination System (NPDES) permit governs the discharge from the FEMP wastewater treatment system. The Biodenitrification Surge Lagoon is the receiving basin for any wastewater sent to the FEMP wastewater treatment system from OU1. Additional description of these wastewater streams, their disposition and the individual flow rates is presented in the *Process Description for the Remediation System Design*.

OU1 wastewater streams include the following:

1) Waste pit surface water currently on Pits 5, 6, and the Clearwell.

2) Water associated with the waste pit excavation including stormwater and water that drains from the waste, including groundwater seeps that enter the pits and travel in contact with the waste.

3) Process related wastewater from the new remedial facilities.

4) Decontamination water (i.e., truck washing, railcar washing).

5) Stormwater associated with the new process area and collected in the new stormwater management basin. The stormwater management basin provides capacity for a 25-year, 24-hour storm event, for the approximate 11 acre area used for construction of the remedial facilities. The system to transfer stormwater from the SWM to the BSL has a maximum transfer rate of 250 gpm.

Wastewaters originating from the waste pit area (including stormwater) initially pass to the Clearwell and/or Facility 18N adjacent to the Clearwell before transfer to the Biodenitrification Surge Lagoon. All other wastewater goes directly to the Biodenitrification Surge Lagoon.

Total flow for these wastewaters is estimated at a peak of approximately 3,400 gpm (based in part on some existing pumping systems) and approximately 200 gpm for a yearly average. This estimate is subject to revision as additional detail is developed and estimates are refined. Water balance study information and additional water flow information is presented in the Block Flow Diagram SK-F-04084 included with the process flow diagrams.

Additional description of these wastewater streams, their disposition and the individual flow rates is presented in the Process Description.

557 [redacted]

2038

Description of On-Site
Rail Improvements

[redacted]

2038

Description of On-Site Rail Improvements

Operable Unit 1
Project Order 145

March 1996
Revision C

Environmental Remedial Action Project
Fernald Environmental Management Project
Fernald, Ohio
FERMCO Subcontract No. 2-21487

PARSONS

25 Merchant Street
Cincinnati, Ohio 45246

558

[redacted]

Description of On-Site Rail Improvements

CONTENTS

SECTION

1.0 Introduction 1-1
- 1.1 Purpose 1-1
- 1.2 Current FEMP Rail Facilities 1-1

2.0 FEMP Railcar and Trackage Requirements 2-1
- 2.1 Spatial and Traffic Constraints 2-1
- 2.2 Design and Operational Constraints 2-1
- 2.3 Scheduling 2-6
- 2.4 Operating Flexibility of Multiple-Unit Trains 2-7
- 2.5 FEMP Storage Track Requirements 2-8

3.0 Support Facilities 3-1
- 3.1 Loadout Building and Associated Facilities 3-1
- 3.2 Final Car Wash Facility 3-1
- 3.3 Locomotive and Railcar Maintenance Building 3-1
- 3.4 Fencing 3-2

4.0 Logistics 4-1
- 4.1 Train Operations 4-1
- 4.2 Daily Operation Sequence 4-1
- 4.3 Sequence for Building Loaded Unit Trains 4-2
- 4.4 Sequence for Breaking Down Empty Unit Trains 4-3

5.0 Glossary 5-1

6.0 References 6-1

APPENDIX

A Quantity of Railcars Required

LIST OF ILLUSTRATIONS

FIGURES

1-1 Existing FEMP Trackage

2-1 Proposed FEMP Rail Facilities

TABLES

2-1 Unit Train "Consist" and Trackage Requirements

560

LIST OF ACRONYMS AND ABBREVIATIONS

CSXT	CSX Transportation, Inc.
DOE	United States Department of Energy
FEMP	Fernald Environmental Management Project
FERMCO	Fernald Environmental Restoration Management Corporation
ft	feet
FY	Fiscal Year
OU	Operable Unit
PCDF	Permitted Commercial Disposal Facility
WAC	Waste Acceptance Criteria

SECTION 1

INTRODUCTION

1.1 Purpose

Pursuant to the Remedial Design Work Plan for Remedial Actions at Operable Unit 1 (OU1), this document provides:

1) The design and operational constraints for the additional Fernald Environmental Management Project (FEMP) trackage required for loading and storage of railcars.

2) A determination of the total number of railcars required to meet production needs.

3) A sketch presenting the rail upgrades and the construction to support on-site operations.

4) A description of the logistics associated with receiving, loading, storing, and moving full and empty gondola railcars to support the OU1 production operation.

A detailed design is currently being prepared for the site rail system improvements.

This plan incorporates the latest design constraints, including maximum production rate, and is the new design basis for the site rail improvements.

1.2 Current FEMP Rail Facilities

As shown in Figure 1-1, FEMP railcars travel north along a 24-mile branch line to Cottage Grove, Indiana, to access CSX Transportation, Inc.'s (CSXT's) Main Line rail system. CSXT, which provides rail service to the FEMP, owns the branch line. CSXT's inactive Shandon Yard, directly northwest of the FEMP, is the origination point of the CSXT spur that serves the FEMP. The track is constructed of heavy-duty rail. After entering United States Department of Energy (DOE)-owned property, the track becomes the main FEMP spur and continues east across an unfenced access corridor. After crossing Paddys Run Road, the DOE's track successively enters (1) the contiguous portion of the FEMP property, and (2) the fenced, access-restricted, FEMP Controlled Area. The main FEMP spur continues into the former process area, where it divides into two light-duty rail parallel tracks (FEMP Tracks 1 and 2). The east and west sections of these tracks are in the Contaminated Area; the center section of the tracks crosses an area that has been downposted to a controlled area.

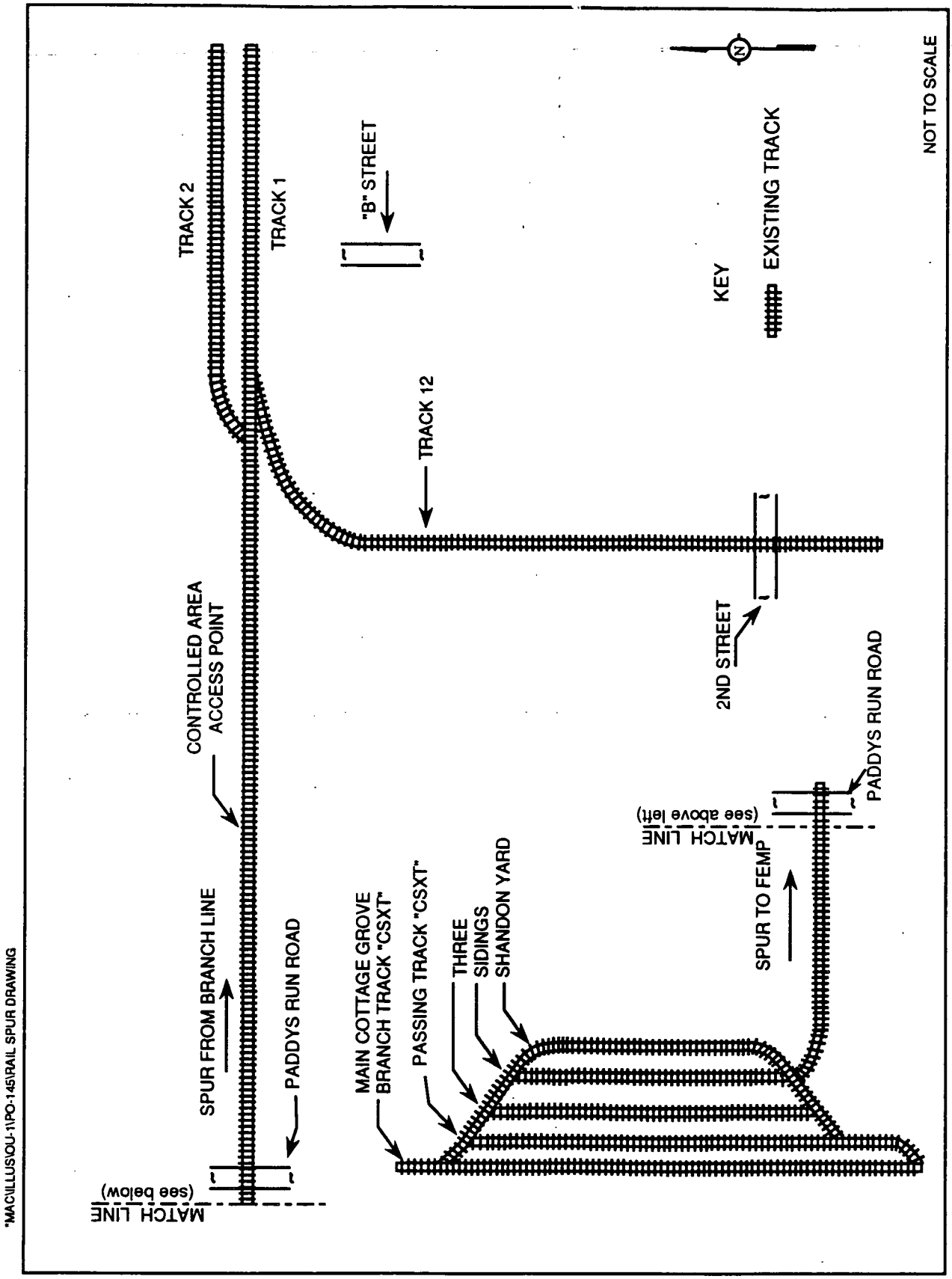

Figure 1-1 - Existing FEMP Trackage

563

These tracks support five unused light-duty FEMP yard spurs, which are in uncertain condition. In addition, the radius of curvature of these tracks is too severe to support substantial rail traffic. These tracks are in the area to be remediated by OU3. FEMP Track 12 (which originates from Track 1, curves around the west side of the former process area, and extends south) is constructed of heavy-duty rail and appears to be in excellent condition. Heavy-duty rail weighing 131 pounds per linear yard is capable of handling loaded gondola cars. Tracks 1 and 2, however, are constructed of light-duty rail weighing 80 pounds per yard.

SECTION 2

FEMP RAILCAR AND TRACKAGE REQUIREMENTS

2.1 Spatial and Traffic Constraints

To comply with commitments to the public, CSXT's Shandon Yard is not used for the staging of loaded railcars. As a result of environmental and locational considerations, the only areas available at the FEMP for the construction of a new railyard to store railcars required for FEMP OU1 operations are parallel to, and:

1) North of Track 1 - Construction in this area requires that approximately 6 inches of soil be remediated. Locating track in this area permits remediation of the Solid Waste Landfill and the OU3 production area without rail interferences.

2) South of Track 1 - Construction of the FEMP Railyard, for storage of filled and empty cars, in this area requires the permanent blocking of "B" Street and would interfere with FEMP remediation.

3) East and west of Track 12 - The existing grade crossing of Track 12, between the Low and High Nitrate Tanks, becomes part of the FEMP's primary waste haul road. OU2 assumes the responsibility of constructing the roadbed and the warning devices necessary to cross OU1's track structure. It is preferable to have no new tracks crossing the road.

The area north of Track 1 has been selected for construction of the FEMP Railyard.

2.2 Design and Operational Constraints

This section presents the design basis for the additional FEMP trackage required for loading and storing railcars.

2.2.1 Track Layout

After completion of the on-site rail reconfiguration, illustrated by Figure 2-1, the FEMP rail system can be described as follows:

1) The FEMP has sufficient track to:
   (1) Store a full inventory of railcars on site
   (2) Start unit train operations with a full inventory of railcars

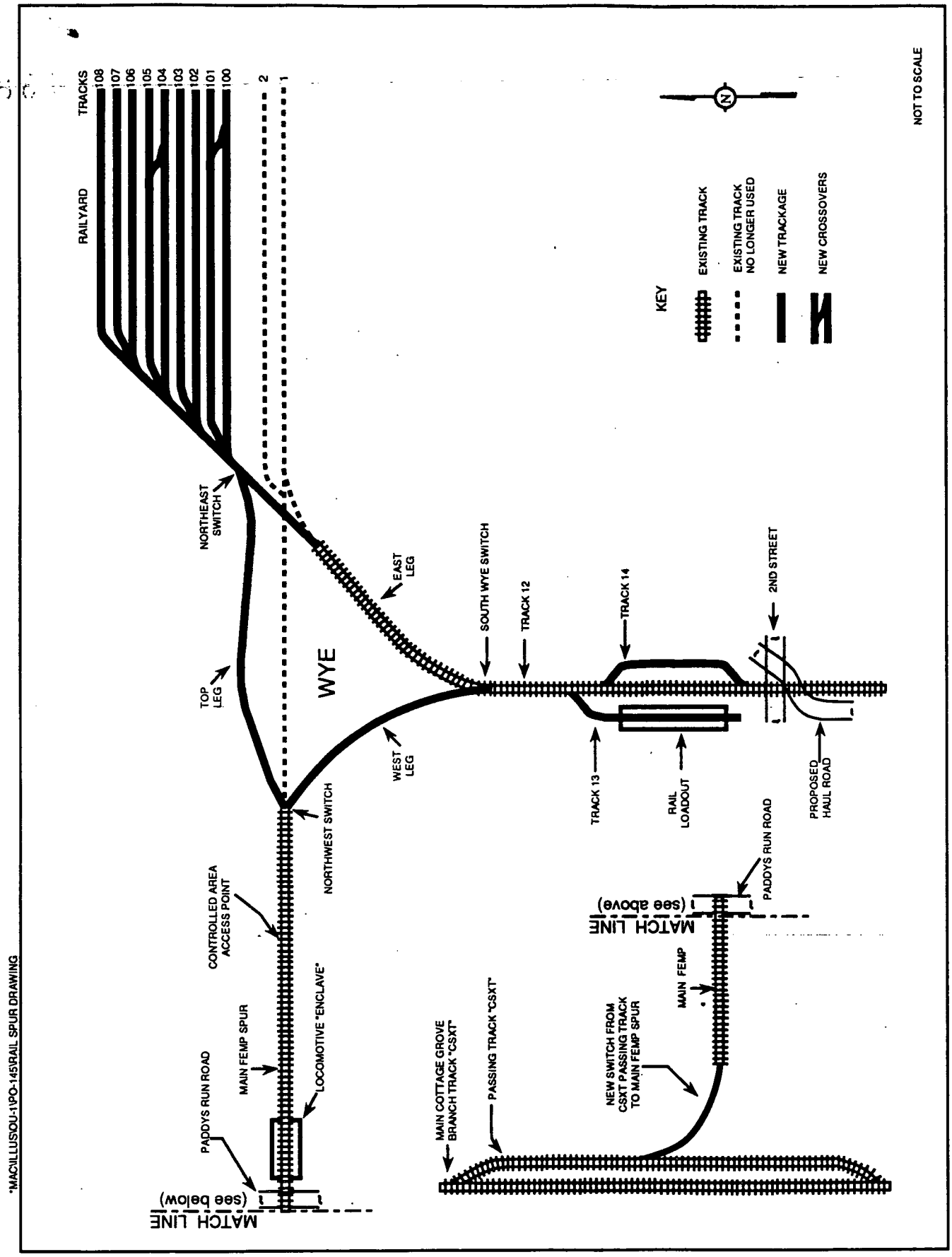

Figure 2-1 - Proposed FEMP Rail Facilities

566 [redacted]

2) Under normal production operations, the FEMP originates and receives the unit train using on-site trackage.

(1) Railcars will not occupy the main FEMP spur outside of the Controlled Area more than 36 hours during the makeup or breakdown of loaded or empty unit trains.

(2) Unit trains will not arrive and leave on the same day from the FEMP.

3) The existing main FEMP spur, existing Track 12, and the proposed railyard will be connected with a wye configuration. The wye will be made up of a top leg connecting the main FEMP spur with the railyard, an east leg connecting the railyard with existing Track 12 (south of Tracks 1 and 2, which will no longer be used), and a west leg connecting the main FEMP spur with existing Track 12.

4) New Track 13 will serve the railcar loadout facility. Track 13 will be accessed by a switch off of Track 12. This switch will be located south of the new south wye switch. Track 13 will be west of and parallel to Track 12. Track 13 will be long enough to allow three railcars to project out of either the north or south end of the three-station loadout building. Additional length will be provided at the south end of Track 13 for a Trackmobile® and bumping post. Operation of the Trackmobile® on Track 13 requires the grade to be 0.00 percent.

5) New Track 14 will be located east of Track 12. This track will be accessed by switches from Track 12 at the north and south ends of Track 14. Track 14 will be used to stage loaded railcars:

(1) During the analysis of exterior swipe sample.

(2) During the analysis for Waste Acceptance Criteria (WAC) verification, when necessary.

Track 14 will follow the same grade as Track 12 in this area. The southerly switch for Track 14 will be north of the haul road. Six railcars will fit between the clearance points on Track 14.

6) New railyard tracks, Tracks 100 through 108, will store both loaded and empty railcars. The yard is stub-ended, allowing access to the railcars from one end only. This restricts train-handling movement to pulling the cars out of the yard south along the east leg of the wye, reversing movement once south of the south wye switch, and pushing the railcars around the west leg to the main FEMP spur. The other movement requires the locomotive to pull cars out of the yard along the top leg of the wye (past the northwest switch), reversing movement to push the cars south around the west leg of the wye onto Track 12. Two sets of crossovers will be positioned within the yard to allow the locomotive to move behind strings of cars. This will enable the locomotive to push the railcars into position during the makeup of loaded unit trains and to exit the yard at the east end when breaking down empty trains. Railcar storage capacity on yard tracks will consider:

(1) Bumping post installation at the east end of each yard track

(2) Clear space between the most easterly railcar and the bumping post be provided on all yard tracks

The railyard may be constructed in phases to accommodate :

(1) Funding allocations

(2) Production rates

7) All new track will be constructed using heavy duty rail.

8) Number 8 turnouts will be the standard used for all upgrades.

2.2.2 Railcars

The DOE will lease medium-wall height gondola cars. Depending upon the manufacturer, these cars will have interior box dimensions of 52½ feet long by 9½ feet wide by 5½ feet high (FERMCO 1995). A 1-foot freeboard at a minimum should be maintained and is achievable during a production loading operation. The recommended car type is 1 foot higher than that of common low-wall units, and therefore about 2,240 cubic feet of material can be loaded. Railcars are fitted with hard covers which are removed only to install liners and load the cars.

It is currently believed that the density of the loaded waste material will be between 80 and 125 pounds per cubic foot. However, 80 pounds per cubic foot is used as the design basis for this plan. This is a conservative basis as it requires the largest number of railcars for the given range of densities. The total weight of material per railcar is approximately 90 tons based on the lower density.

The maximum anticipated production rate of the loadout facility is 680 tons per day for 5 days per week. At this rate, with each railcar capable of carrying 90 tons of material, the maximum average number of railcars loaded per day is 7.6. This value is considered the upper limit, and no contingency is added for more production as additional funding is not expected. However, for simplicity in calculations, and as a small additional measure of conservatism, eight railcars loaded per day is used to determine maximum railcar purchase or lease requirements.

Table 2-1 summarizes railcar and track requirements for the maximum production scenario. Appendix A provides the detailed justification for the quantity of railcars required.

568

Table 2-1 - Unit Train "Consist" and Trackage Requirements

Planning Basis For Railcar Utilization	Maximum Production Rate
Production rate, cars/day (5 days/week)	7.6
Unit trains	2
Cars/unit train with pit material	60
Total unit train cars for pit material	120
Maximum working reserve cars	40
FEMP Spacer Cars	2
Total Number of Railcars Needed	**162**
Total Feet of Storage Track Required	**9,234**

The railcars should be procured, by lease or purchase, in two phases to accommodate the increased production rate from initial start-up to the final year of production. Future baseline funding will dictate when the second phase of railcars is procured. This phasing of railcar purchase and railyard construction is important since actual operating experience can then be factored into any final required changes.

The coupler-to-coupler, 57-foot length of the recommended gondola cars is the primary factor in determining track needs for railcar storage at the FEMP. Shorter "high-wall" gondola cars require less FEMP track, but their internal wall supports prevent the railcars from being lined.

Railcar cost reduction efforts include the following:

1) Performing a lease versus purchase analysis for new cars

2) Preparing a solicitation to determine the availability of a uniform fleet of used railcars in good condition

2.2.3 Unit Train

CSXT, the originating railroad company, requires that a unit train's "consist" be at least 40 cars. In addition, pursuant to the requirements of 49 CFR 174.85, a spacer car is necessary to limit exposure to the train crews. CSXT requires that the spacer car be loaded to prevent it from derailing. Thus, an inert cargo will have to be obtained for spacer cars.

The length of the train is limited by the FEMP's track for originating trains. As the Shandon Yard is not available, the trains must be made up along the main FEMP spur up to the clearance point for the northeast switch, as currently configured. Thus, allowing space for access of two CSXT line-haul locomotives and a spacer car, a maximum of about 60 gondola railcars can be dispatched by the FEMP at one time.

2.3 Scheduling

2.3.1 Analytical Hold Periods

Waste material will be tested and accepted prior to being loaded into railcars. However, additional samples of waste material will be taken as the waste is loaded into railcars, if additional samples are necessary to verify the results of the in-process WAC analysis.

Also, swipe samples of the railcars' exteriors will be taken for radiological control. The waiting period for both the waste material samples and the swipe samples is expected to be 24 hours. The railcars awaiting analysis results will be held on Track 14. At a maximum production, a small portion of Track 12 may also be used to hold railcars awaiting analysis. However, these railcars will not block the proposed Haul Road.

The additional sampling and railcar holding are precautionary measures to ensure that the normally planned sampling and railcar decontamination operations are satisfactory. It is anticipated that the additional sampling and railcar holding will be eliminated as operating experience increases.

2.3.2 Rail Transit Time

CSXT quotes a unit train round trip transit time of 11 days for the representative Permitted Commercial Disposal Facility (PCDF) (Johnson 1994).

570 [redacted]

2.3.3 PCDF Turnaround Time

Five days is allotted at the PCDF for: (1) waste acceptance, (2) unloading, and (3) train makeup. FEMP Scheduling must ensure that two unit trains are not at the PCDF at the same time.

2.3.4 FEMP Turnaround Time

One day is provided for the unit train to be assembled at the FEMP, and another day is afforded for the unit train to be disassembled upon returning from the PCDF. Furthermore, as noted in Subsection 2.2.1, unit trains will not arrive and depart on the same day.

2.4 Operating Flexibility of Multiple-Unit Trains

Rail options involving DOE-owned/leased cars and unit trains offer increased safety and security over use of the CSXT's regularly scheduled freight service, in which cars:

1) Sit unattended on sidings waiting for the next train

2) Are switched from one train to another in various yards while traveling to and from the PCDF

3) Are scattered across the country and subject to unauthorized appropriation to other service in the event of local car shortages

In addition, unit train service reduces the project cost, due to:

1) A discount afforded to this type of traffic by the rails
2) Faster transit time which maximizes utilization of railcars

The primary disadvantages of unit train service, from an operating perspective, are that:

1) Scheduling problems "ripple" through the transportation system. The ripple effect may increase over time and distance from the source, particularly with multiple-unit trains.

2) Production surges must be accommodated.

These problems may be addressed by varying the unit trains' (1) scheduling, and/or (2) consist. The first method involves constantly changing the schedule for unit train departures. CSXT shows a willingness to be somewhat flexible in this matter, but requires a 1-week advance notice of schedule changes. As

noted in Subsection 2.2.3, the FEMP's rail system is designed to accommodate up to 60-car unit trains, if required.

2.5 FEMP Storage Track Requirements

The installation of new yard tracks is subject to the constraint that the FEMP have sufficient track to store all railcars in the event of suspension of operations due to funding problems, seasonal weather disruptions, or other problems.

Car storage on the main FEMP spur is impractical, as this would block the FEMP's ability to originate unit trains upon resumption of production.

The new storage yard is designed as a single lead, tandem turnout, ladder track. If all these stub tracks terminate at a common boundary, such as the on-site cell, each successive stub will be shorter than the previous one.

In view of funding uncertainties, 9,462 feet (from Table 2-1) may be an excessive amount of storage track to construct at one time. Accordingly, it is recommended that the FEMP embark on a two-phase program to procure railcars and install the required track.

Track 13, designed for loadout, will accommodate 10 cars, and Track 14 has the capacity to store six cars awaiting results from the analytical analysis, (if this storage is required).

Crossovers are required within the yard to provide runaround capabilities for the locomotive within the yard.

In addition to the above-noted railyard track, construction and inspection involves the following:

1) Inspection and "in-kind" repair of main FEMP spur, FEMP trestle, and Track 12
2) Building new curve, between the main FEMP spur and Track 12 (131-pound rail)
3) Construction of yard tracks, and two crossovers (131-pound rail)
4) Construction of Tracks 13 and 14, and the north leg of wye (131-pound rail)
5) "Up-front cost" (to be credited) for rebuilding CSXT Shandon Yard switches
6) Construction of support facilities noted in Section 2
7) Removal of rail at solid waste landfill

Cost reduction efforts focus on availability/procurement of:

1) Heavy-duty "relayer" rail, at favorable pricing, from CSXT's former Shandon Yard

572 [redacted]

2) Rail from the abandoned southern section of Track 12 for the construction of the new curve-in from the main FEMP spur to the north end of Track 12

3) The car bumpers, at the ends of abandoned FEMP stub spurs, for "recycling"

SECTION 3

SUPPORT FACILITIES

3.1 Loadout Building and Associated Facilities

A three-station loadout building and the following associated facilities are not included in this on-site rail improvement work because they are included in the Plant Facilities Design Package.

1) Trackmobile® and overhead crane for movement of lids

2) Railcar scale (integration with rail system design is required)

3) Computer and software for automated preparation of shipping documents

4) Railcar washing and spent fluid management (integration with rail system design is required)

5) Radiological monitoring and analytical equipment for determining railcars':
   (1) Total fixed and removable contamination
   (2) Removable contamination

3.2 Final Car Wash Facility

The latest loadout approach does not require a final car wash facility. However, space has been left in the new railyard layout to accommodate for potential future need.

3.3 Locomotive and Railcar Maintenance Building

The latest maintenance approach does not require a locomotive and railcar maintenance building. However, space has been left in the new railyard layout to accommodate for potential future need.

3.4 Fencing

The fencing requirements covered in the scope of this project include the following:

1) Chain link fencing for restricting access around:
   (1) Both sides of the main FEMP spur from the Controlled Area out to Paddys Run Road.
   (2) A 200-foot[1] CSXT locomotive "enclave," just east of Paddys Run Road, with sliding gates at each end. This area isolates CSXT's equipment and crew from the site.

2) Radiological control fencing around the new railyard and the balance of the main FEMP spur.

[1] Length to be verified.

575

[redacted]

SECTION 4

LOGISTICS

4.1 Train Operations

Train operations are divided into three main categories:

1) Daily operations
2) Makeup of loaded unit trains for CSXT
3) Breakdown of empty unit trains from CSXT

The operating scenarios described are for maximum loadout rates and unit train lengths, approximately eight railcars per day (5 days per week) and approximately 60 car unit trains, respectively.

Yard track designations have been presented only to assist in following the proposed train operation.

4.2 Daily Operation Sequence

At the start of each day, the locomotive moves four empty railcars from the designated empty Tracks 100 through 104, to the loadout facility on Track 13. The cars must be pulled out of the railyard around the top leg of the wye until the easternmost railcar clears the northwest switch. Reverse movement pushes the railcars south around the west leg of the wye onto Track 13. The locomotive pushes the railcars to a point where the Trackmobile® can couple onto the southernmost empty railcar and continue pulling the railcars into the facility. The locomotive will not be allowed to access the loadout facility; all movement except delivery to and pickup from Track 13 will be by the Trackmobile®. Delidding, lining, loading, relidding, weighing, decontaminating, and exterior swiping of the railcars will be performed on Track 13.

Track 14 and Track 12, south of the haul road, will be used as holding stations for loaded railcars. This holding period is necessary to await results of the exterior swipe analysis, approximately 24 hours. Track 14 has capacity for six railcars between the clearance points. Track 14 can be accessed from either the north or south from Track 12. The holding station on Track 12 will be south of the proposed haul road and north of the locomotive maintenance area, and will accommodate four railcars.

Prior to the completion of the morning loading sequence, the locomotive will access Track 14 from the south switch and pick up the four loaded railcars placed there the previous morning. Next, the locomotive will push the railcars north along Track 14, through the north switch for Track 14, onto Track

12, and then around the east leg of the wye into the railyard on to designated loaded Tracks 105 through 108.

The locomotive will return and pick up the four loaded railcars on Track 13, pulling them north until the southernmost railcar clears the Track 13 switch. Then the locomotive will reverse movement and push the railcars south onto Track 14. Four empty railcars will be delivered to Track 13 for afternoon loading as previously described.

Prior to completion of the afternoon loading sequence, the locomotive will pick up the four loaded railcars placed at the south end of Track 12 the previous afternoon, pull the railcars north along Track 12, and around the west leg of the wye until the southernmost car has cleared the northwest switch, and push the railcars east along the top leg of the wye onto a designated loaded track.

The locomotive will pick up the four loaded railcars from Track 13 from the afternoon loading sequence, pulling the railcars north onto Track 12 until the southernmost railcar clears the switch for Track 13, then reversing and pushing the railcars south along Track 12 to the designated holding location.

4.3 Sequence for Building Loaded Unit Trains

CSXT is contacted to provide the standard 24-hour advance notice that a loaded unit train shipment will be ready the following day. The first priority of each day's track operation is to deliver the empty railcars to Track 13.

The designated empty Tracks 100 through 104, will be essentially clear of railcars, having used these previously empty railcars to make up loads for the unit train and staging these cars on designated loaded Tracks 105 through 108. The exception will be the minimum number of empty railcars required for the working reserve. Any empty railcars still on Track 104 will be switched onto Tracks 101 through 103 to allow access to the crossover between Tracks 104 and 105.

The buffer railcar, which will be located in the railyard, must be the easternmost of the first string of loaded railcars to be pulled out of the yard, making up the unit train. The buffer railcar and this first string of loaded railcars, not exceeding a total of 18 railcars, will be pulled out of the railyard, south around the east leg of the wye, and onto Track 12 until the buffer car clears the south wye switch. The locomotive will reverse direction and push the string of railcars north around the west leg of the wye to the eastern gate of the locomotive enclave. This procedure, less additional buffer cars, will continue until the space between the eastern gate of the locomotive enclave and the northwest switch is full of loaded cars (39 railcars).

The last 21 cars to make up the 60 car unit train (one buffer and 59 loaded railcars) will be placed along the top leg of the wye. These cars must be pushed into position by the locomotive. Track 104 must be

577 [redacted]

emptied of cars to allow access to the east crossover switch between Tracks 104 and 105. The locomotive will travel through this crossover and come in behind a string of 15 loaded cars on Track 105, pushing these cars west out of the yard onto the top leg of the wye. The remaining six loads will be switched onto Track 105 from one of the remaining designated loaded tracks to west of the west crossover switch between Tracks 104 and 105. The locomotive will access Track 104, reverse movement, and travel through the crossover to Track 105, then push the remaining six loaded railcars into position along the top leg of the wye.

4.4 Sequence for Breaking Down Empty Unit Trains

CSXT notifies the facility 24 hours in advance of the arrival of the empty unit train. Prior to the arrival of the empty unit train, the main FEMP spur and the top leg of the wye are cleared of any railcars.

The CSXT locomotives deliver the empty 60-car unit train (one buffer car and 59 empty railcars), pushing the railcars onto the main FEMP spur and around the top leg of the wye until the easternmost railcar is west of the northeast switch clearance point.

The northeast switch must remain clear to allow train operations from the railyard along the east leg of the wye. The FEMP locomotive accesses the top leg of the wye from the east; couples to a string of empty railcars not exceeding 19 railcars; pulls the string east onto Track 101, which has been emptied; uncouples the easternmost railcar west of the west crossover switch between Tracks 100 and 101; proceeds through the crossover; reverses movement; and exits the yard on Track 100, which must be empty.

The locomotive again accesses the top leg of the wye from the east, couples to a string of railcars (a minimum number to allow 150-feet of clear space west of the northwest switch on the main spur), pulls east until the easternmost railcar is west of the northeast switch and the westernmost railcar is east of the clearance point for the northwest switch, uncouples from the string, proceeds east through the northeast switch, reverses direction, proceeds south along the east leg of the wye, reverses movement once the locomotive crosses the south switch, proceeds north along the west leg of the wye, reverses direction after clearing the northwest switch, comes in behind the string of railcars on the top leg of the wye, and pushes the railcars onto designated empty tracks.

The top leg of the wye is now clear of railcars. The locomotive pulls the remaining empty railcars on the main spur along the main spur, around the west leg of the wye until the westernmost railcar clears the south switch. Movement is reversed, and the railcars are pushed north around the east leg of the wye onto designated empty tracks. The maximum number of railcars pulled in a string is 18.

SECTION 5

GLOSSARY

Clearance point The point at which operation on an adjacent track does not impact operation on the main track.

Consist Number and/or type of cars that make up a freight train.

Frog A track structure used at the intersection of two running rails to provide support for wheels and passageways for their flanges, thus permitting wheels on either rail to cross the other.

Ladder track A successive series of switches off of a straight track which provide access to several parallel yard tracks.

Locomotive enclave A section of the main FEMP spur, just east of Paddys Run Road, with sliding gates at each end. This area isolates CSXT's equipment and crew from the FEMP site.

No. 8 Defines the angle from which a track diverges from the main track through a turnout.

Switch A track structure used to divert rolling stock from one track to another.

Turnout An arrangement of a switch and a frog with closure rails, by means of which rolling stock may be diverted from one track to another.

Wye A triangular track system with three legs and three switches on which locomotives and trains may be turned.

SECTION 6

REFERENCES

(FERMCO 1995) Fernald Environmental Restoration Management Corporation, July 1995. *OU1 Transportation Mode Options Analysis - Direct Rail Shipment from the FEMP to a Permitted Commercial Disposal Facility Versus Intermodal Transfer.*

(Johnson 1994) Johnson, R., Letter dated July 6, 1994, from CSX Transportation, Inc.

APPENDIX A

QUANTITY OF RAILCARS REQUIRED

Quantity of Railcars Required

CATEGORY	QTY	DESCRIPTION
Unit Train	120	Railcars required to create 2 unit trains each containing 60 railcars
Working Reserve*	40	Railcars filled with waste material when both unit trains are away from the FEMP
Spacer	2	Railcars (not loaded with waste material) positioned between the locomotive(s) and the loaded railcars (1 for each unit train)
Total Required	162	

* The figure presented below is the operating schedule for 2 x 60-railcar unit trains at maximum production rate of 8 railcars per day (5 Days Per Week). This detail is required to determine the quantity of "Working Reserve" Railcars.

							Status of Railcars at Day End				
							Car Source			Replenished	Empty
Day	Railcars Loaded	Train 1 Daily	Train 1 Cum	Train 2 Daily	Train 2 Cum		Train 1	Train 2	Working Reserve (WR)	Working Reserve	Working Reserve
		ARRIVE									
1	8	8	8				8				40
2	8	8	16				8				40
3	8	8	24				8				40
4	8	8	32				8				40
5	8	8	40				8				40
6			40								40
7			40								40
8	8	8	48				8				40
9	8	8	56				8				40
10	8	4	60	ARRIVE			4	4			40
11	8	Day 1	LEAVE	12	12			8			40
12	8	Day 2		8	20			8			40
13		Day 3			20						40
14		Day 4			20						40
15	8	Day 5		8	28			8			40
16	8	Day 6		8	36			8			40
17	8	Day 7		8	44			8			40
18	8	Day 8		8	52			8			40
19	8	Day 9		8	60			8			40
20		Day 10		Day 1	LEAVE						40
21		Day 11		Day 2							40
22	8	Day 12		Day 3					8		32
23	8	Day 13		Day 4					8		24
24	8	Day 14		Day 5					8		16
25	8	Day 15		Day 6					8		8
26	8	Day 16		Day 7					8		0
27		ARRIVE		Day 8							0
28		40	40	Day 9			40				40
29	8	8	48	Day 10			8				40
30	8	8	56	Day 11			8				40
31	8	4	60	Day 12			4		4		36
32	8	Day 1	LEAVE	Day 13					8		28
33	8	Day 2		Day 14					8		20
34		Day 3		Day 15							20
35		Day 4		Day 16							20
36	8	Day 5		ARRIVE					8		12
37	8	Day 6		36	36			32		4	40
38	8	Day 7		8	44			8			40
39	8	Day 8		8	52			8			40
40	8	Day 9		8	60			8			40
41		Day 10		Day 1	LEAVE						40
42		Day 11		Day 2							40
43	8	Day 12		Day 3					8		32
44	8	Day 13		Day 4					8		24
45	8	Day 14		Day 5					8		16
46	8	Day 15		Day 6					8		8
47	8	Day 16		Day 7					8		0
48		ARRIVE		Day 8							0
49		40	40	Day 9			40				40
50	8	8	48	Day 10			8				40
51	8	8	56	Day 11			8				40
52	8	4	60	Day 12			4		4		36
53	8	Day 1	LEAVE	Day 13					8		28
54	8	Day 2		Day 14					8		20
55		Day 3		Day 15							20
56		Day 4		Day 16							20
57	8	Day 5		ARRIVE					8		12
58	8	Day 6		36	36			32		4	40
59	8	Day 7		8	44			8			40
60	8	Day 8		8	52			8			40
61	8	Day 9		8	60			8			40
62		Day 10		Day 1	LEAVE						40
63		Day 11		Day 2							40

Legend: Days when cars are in transit. Days when cars are at PCDF.

Off-Site Rail Upgrades

THIS DOCUMENT IS ATTACHED FOR YOUR INFORMATION.

IT IS THE SAME AS WAS DISTRIBUTED TO THE EPA

IN THE PRELIMINARY DESIGN PACKAGE

ON OCTOBER 24, 1995.

2038

Off-Site Rail Upgrades

Prepared by

The Fernald Environmental Restoration Management Corporation
Under Contract No. DE-AC05-92OR21972
with the United States Department of Energy

584

LETTER REPORT

Off-Site Rail Upgrades

In support of the OU1 remediation efforts, it has been determined that there are various off-site rail improvements which shall be implemented before any OU1 wastes can be shipped by rail from the FEMP. The nature of the improvements, the need for the improvements, and a path forward are provided in the following subsections. The focus of these improvements is the CSX Transportation, Inc. (CSXT) Branch Line between the FEMP and Cottage Grove, Indiana, which is depicted on Figure 1.

1.0 Track Conditions

Through various interactions with the public, numerous concerns surfaced concerning the condition of the rail tracks along the Branch Line. Specifically, concerns were identified for conditions such as track blockages, tracks in bad shape (including loose spikes), blocked and/or washed out culverts, vegetation along the track, drainage problems threatening the structural integrity of the track, etc.

It is the responsibility of the rail to ensure compliance with Federal Railroad Administration regulations and that the tracks and related structures used by the trains are in good repair. It is also the responsibility of the rail to maintain safe and sufficient crossings where a street, lane, public road, or highway crosses the railway track. DOE does not have enforcement authority over the rail. However, DOE will require the rail to document its compliance with regulations and laws prior to shipment, and will require, upon request, that the rail document its ongoing compliance. In this way, DOE will be satisfied that the tracks and surrounding structures are in a condition suitable to support safe shipping of OU1 wastes before shipping commences.

2.0 Shandon Yard

This switch yard parallels CSXT's Branch Line at the junction of the FEMP spur. Shandon Yard will not be used as a staging area for unit trains.

Planned improvements to this yard are limited to the construction of a switch connecting the FEMP spur directly to the CSXT Branch Line to facilitate the movement of railcars into and out of the FEMP.

3.0 Bridges/Trestles

Based on information provided by CSXT, trains *en route* from the FEMP to Cottage Grove will cross five bridges/trestles of varying ages, and of wood or wood/steel construction. These structures have

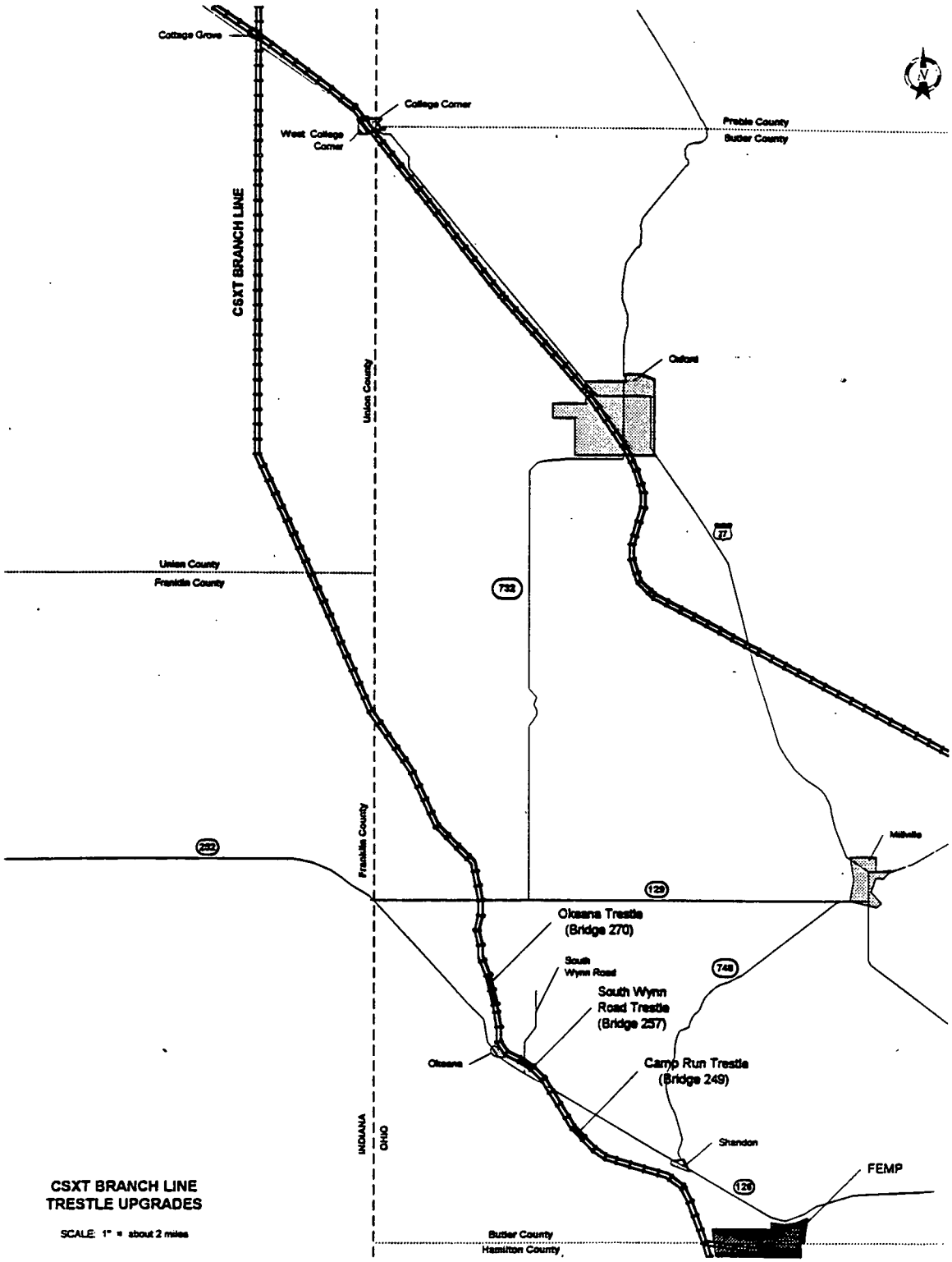

Figure 1 - CSXT's Branch Line from the FEMP to Cottage Grove, IN

586 [redacted]

received substantial maintenance since the time of construction and, reportedly, are adequate for current rail traffic. The bridges/trestles are routinely inspected for:

1) Track condition
2) Superstructure
3) Substructure
4) Waterway obstructions (if applicable)

CSXT has advised the FEMP that the use of the Branch Line to safely support the proposed, additional train traffic which will be new to this Branch Line, will require that three of the bridges/trestles on the Branch Line be strengthened. Specifically, although suitable for current traffic levels, CSXT has advised the FEMP that these three bridges/trestles would have to be upgraded prior to the commencement of rail traffic associated with this project. The three bridges/trestles, as they have been identified by CSXT (including their respective bridge numbers) are identified below and shown on Figure 1:

1) Camp Run (Bridge #249)
2) South Wynn Road (Bridge #257)
3) Bucks Run and road (Bridge #270), also known as the Okeana Trestle

The structure of primary concern is the 846 foot long and 65 foot high "Okeana Trestle" of which 646 linear feet is timber construction, as shown in Figure 2. Generally, the upgrade of the "Okeana Trestle consists of the replacement of the 646 feet of timber trestle with an open timber deck steel girder superstructure. The substructure will consist of steel pile bents or steel towers supported by concrete footings with piling.

Upgrades to the other two bridges/trestles are expected to be minor.

Specifics relative to the upgrades of all three of the bridges/trestles will be defined by CSXT and/or its subcontractor through the design and subsequently implemented by CSXT and/or its subcontractor. Any upgrades will reflect nominal disruption of the current rail traffic.

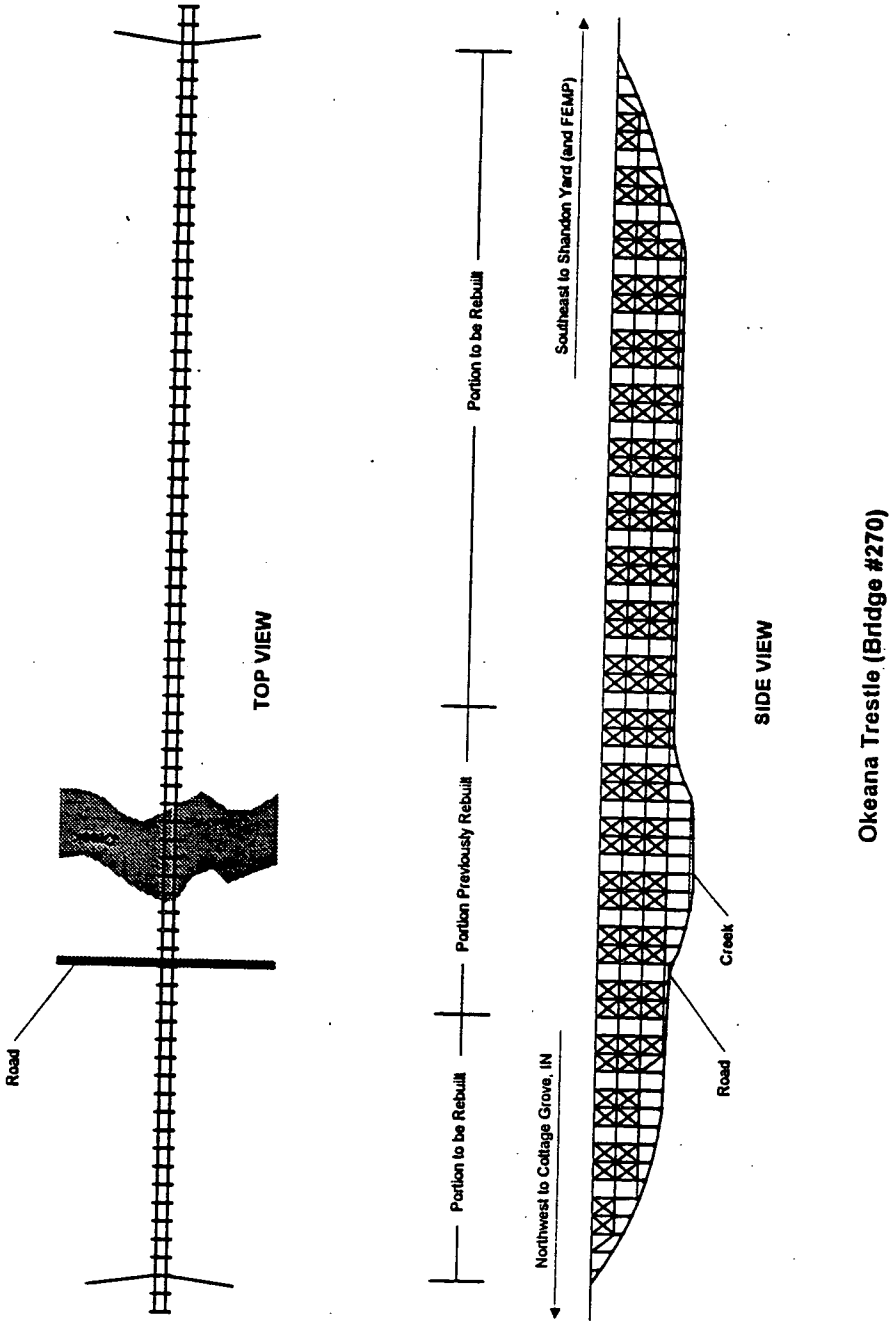

Figure 2 - Figure of the Okeana Trestle (Bridge #270)

2038

Construction Schedule for Proposed Remedial Facilities for Operable Unit 1 Remediation

Prepared by

The Fernald Environmental Restoration Management Corporation
Under Contract No. DE-AC05-92OR21972 with the
United States Department of Energy

589

1.0 SUMMARY

The schedule for construction of the remedial facilities for Operable Unit 1 (OU1) is based on the adoption of the Alternative Remedial Action Subcontracting Approach (ARASA) in lieu of the Design Build and Operate (DBO) concept as a means of implementing portions of the selected remedy for OU1.

The selected remedy presented in the OU1 Record of Decision (ROD) consists of the following: 1) excavation of waste pits; 2) pretreatment (soils segregation); 3) treatment by thermal drying (as necessary); 4) loadout into railcars; 5) rail-originated transportation from the Fernald Environmental Management Project (FEMP); and 6) off-site disposal at a permitted commercial disposal facility. Under ARASA, the subcontractor would be responsible for performing Items 1 through 4, and FERMCO would be responsible for Items 5 and 6. This activity would be performed consistent with the FEMP ten-year remediation schedule.

Key features of the Construction Schedule are the following:

1) The Construction schedule presented herein is consistent with the FEMP's "10-Year" Plan. The 10-Year Plan is an integrated overall plan for the FEMP with the goal to complete the remediation within a ten-year period commencing in FY 1996 and ending in FY 2005. Consistent with the 10-Year Plan is a projected completion date for the remediation of OU1 during FY 2004 with Decontamination and Dismantlement (D&D), and Site Restoration activities complete by mid 2005. The Construction Schedule shows that OU1 expects to start operation of waste processing and loadout by July 1998.

   DOE will formally identify a proposed start date for the processing and shipment of waste in the Remedial Action Work Plan (RAWP). Pursuant to the approved Remedial Design Work Plan (RDWP), the RAWP is scheduled to be submitted to the EPA on October 22, 1996.

2) Under ARASA, a subcontractor will design, install, and operate the facilities required to implement scope Items 1-4 above. The Request for Proposal (RFP) covering this work is expected to be issued in July 1996 and awarded by May 1, 1997. Although the installed on-site drying capacity of the subcontractor's processing system cannot be ascertained precisely until proposals are received from bidders responding to a performance-based statement of work, it is anticipated that the system will include thermal drying capacity at a nominal rate of at least 20 tons/hr.

   The 10-Year Plan envisions an increased drying capacity in FY 2001, although the need for this will be established after initial operations are evaluated. The subcontractor, at his option, may elect to install more drying capacity initially, thereby eliminating the need to add equipment later. Such decisions are expected to affect the pricing strategy adopted by the subcontractor and will be a function of market pressures, operating flexibility, available equipment, etc.

3) The schedule shows all of the construction elements required to initiate operation of the OU1 remediation facility. The schedule shows:

A) Off-site upgrade of the FEMP to Cottage Grove branch rail line,
B) On-site (rail) infrastructure development associated with the storage, maintenance, and logistics of railcar management,
C) Construction of the treatment facilities, and
D) Site preparation activities.

4) The schedule illustrates that OU1 will be meeting the requirement of Section 120(e)(2) of Comprehensive Environmental Response, Compensation, and Liability Act (CERCLA) for commencing substantial continuous, on-site physical remedial action not later than 15 months after signing the ROD, i.e., by June 1, 1996. Pertinent to that demonstration, as presented in the RDWP and as illustrated on the Construction Schedule, is the construction of site preparation facilities scheduled to commence in April 1996. These activities prepare the way for the installation of equipment and foundations needed for the plant and for the expansion of the on-site rail.

Additional activities which have taken place within the 15-month post-ROD period are:

A) Design of the upgrades and repairs to the bridges and trestles along the FEMP to Cottage Grove branch line. Award for the design portion of this work was made in November of 1995.

B) Construction of support facilities (parking areas, administrative offices, change-out and break-out facilities) to be utilized first by the construction forces building the plant facilities and then by the operating personnel. The construction of these structures was completed in September 1995; they are now operational.

5) The schedule also illustrates continuous progress toward the initiation of remediation with Site Preparation Work; Onsite Rail Construction; Plant Construction and Installation activities illustrating continuous progress toward remediation.

2.0 BRIEF SYNOPSIS OF THE CONSTRUCTION SCHEDULE FOR OU1

The project may be divided into four distinct construction actions: 1) The repair and refurbishment of the Branch rail line extending from the FEMP to Cottage Grove, Indiana; 2) the site preparation activities; 3) the expansion of the on-site rail based infrastructure; and, 4) the installation of the processing plant.

591 [redacted]

The first three actions concern off-site and on-site infrastructure development. These actions are not within the scope of work of the subcontractor selected under ARASA. These construction activities result from the execution of four (4) Certified for Construction (CFC) design packages: these are summarized in the following tabulation which is cross referenced to the attached schedule.

Construction Actions Required For Infrastructure Development

Action	CFC Package	Schedule Reference
Off-site RR Repair	Off-site Rail Upgrade Design Package	1CBA600181
Site Preparation Activities	Package No. 1 - Site Prep - Civil Work	1CBA100445
Site Preparation Activities	Package No. 2 - Foundations and Above Grade Utilities	1CBA100470
On-site Rail Infrastructure	Package No. 3 - On-site Rail (Tracks)	1CAA803812

The design, construction, and operation of the treatment plant will be the responsibility of the subcontractor selected in accordance with ARASA. A statement of work (SOW) will be prepared to cover these activities.

This SOW will be a performance based specification drawing upon the Title I design documentation already developed and submitted to EPA but will allow potential bidders sufficient leeway to propose efficient operating modes and alternative technical approaches (consistent with the ROD and the ARAR's). The SOW is scheduled to be available by July 1, 1996 for EPA review and comment and will be incorporated into a Request for Proposal Package (RFP) to be issued in July 1996. Award of this contract is scheduled for May 1, 1997. To conform with the FEMP's 10-Year Plan, initiation of waste product loadout should commence in July 1998; thus the selected subcontractor will have about 14 months to install his equipment and attain operational status.

As part of developing ARASA, a market survey of representative Remedial Action Contractors (RACs) was made to ascertain private sector interest in the approach and to acquire planning information. The invited RACs indicated that a 14 month time frame was adequate for mobilizing, constructing, and testing operations, thus the schedule is viable for a July 1998 start under ARASA. The critical path for this project passes through the remedial design (Title I), through the procurement activities to secure the subcontractor and through the mobilization and facilities construction performed by the subcontractor.

Additional actions involving contracting with a Permitted Commercial Disposal Site for the off-site disposal of the OU1 waste, forming a tender (or contract) arrangement with a railroad for transporting the waste off-site; acquiring, either through lease or purchase, gondola type rail cars; purchasing or leasing of rail car covers; and, purchasing of liners are also shown on the schedule but are not on the critical path.

As can be seen from the attached construction schedule the anticipated date for operational startup is July 1998. As noted above, the Remedial Action Work Plan for OU1 will formally identify the proposed operational startup date.

3.0 ASSUMPTIONS

1) The 10-Year Plan is based overall on the provision to the FEMP of approximately $256 Million in FY 1996 and $276 Million, unescalated 1995 dollars thereafter (through FY 2005).

Activity ID		Early Finish	
1CAA453000	02OCT95	07MAY96	REMEDIAL DESIGN -- 1CAA4
1CAA453020		24OCT95	SUBMIT PRELIMINARY PACKAGE TO EPA
1CAA453050		20MAR96	SUBMIT DRAFT PRE-FINAL PACKAGE TO EPA
1CAA453075	11OCT95	15APR96	TITLE 1 ACTIVITIES
1DEB100000	22JAN96	01MAY97	ARASA SUBCONTRACTOR PATH FORWARD -- 1DEB1
1DEB100030		01MAR96	PATH FORWARD DECISION
1DEB100150	26JAN96	01JUL96	STATEMENT OF WORK PRODUCTION
1DEB100185		01JUL96	ISSUE SOW TO EPA
1DEB100220	06JUN96	01MAY97	PROCUREMENT OF SUBCONTRACTOR
1DEB100240	12JUL96	17JUL96	ISSUE SOLICITATION
1DEB100260	29OCT96	26NOV96	EVALUATE PROPOSALS
1DEB100285	12FEB97	12FEB97	RECOMMEND VENDOR
1DEB100310		01MAY97	AWARD ARASA CONTRACT
1CAA300000	02JUL96	04MAR97	RA WORK PLAN -- 1CAA3
1CAA300002		22OCT96	SUBMIT OU1 DRAFT RA WORK PLAN TO EPA (CA)
1CAA300005		04MAR97	EPA APPROVES FINAL OU1 RA WORK PLAN
1CBA600000	17NOV95	26JAN98	OFF SITE RAIL UPGRADE -- 1CBA6
1CBA600150	17NOV95*		AWARD CSXT ENGINEERING CONTRACT
1CBA600181		10APR96	CFC OFFSITE RAIL UPGRADE COMPLETE
1CBA600250	18NOV96	26JAN98	CSXT CONSTRUCTION (OFFSITE RAIL)
1CBA600300	18NOV96		AWARD CSXT CONSTRUCTION CONTRACT (OFFSITE RAIL)
1CBA600600		26JAN98	OFF SITE RAIL UPGRADE COMPLETE
1DEA100100	02OCT95	30OCT96	WASTE DISPOSAL SITE PROCUREMENT
1DEA100195		30OCT96	AWARD CONTRACT (WASTE DISPOSAL SITE)
1DEA100205	02OCT95	16MAY96	TENDER VS CONTRACT (RAIL CONTRACT)
1DEA100240		30JAN97	AWARD RAILROAD TENDER
1CBA100000	15FEB96	20DEC96	SITE PREPARATION -- 1CBA1
1CBA100445		14FEB96	CFC PACKAGE #1 COMPLETE (SITE PREP CIVIL WORK)

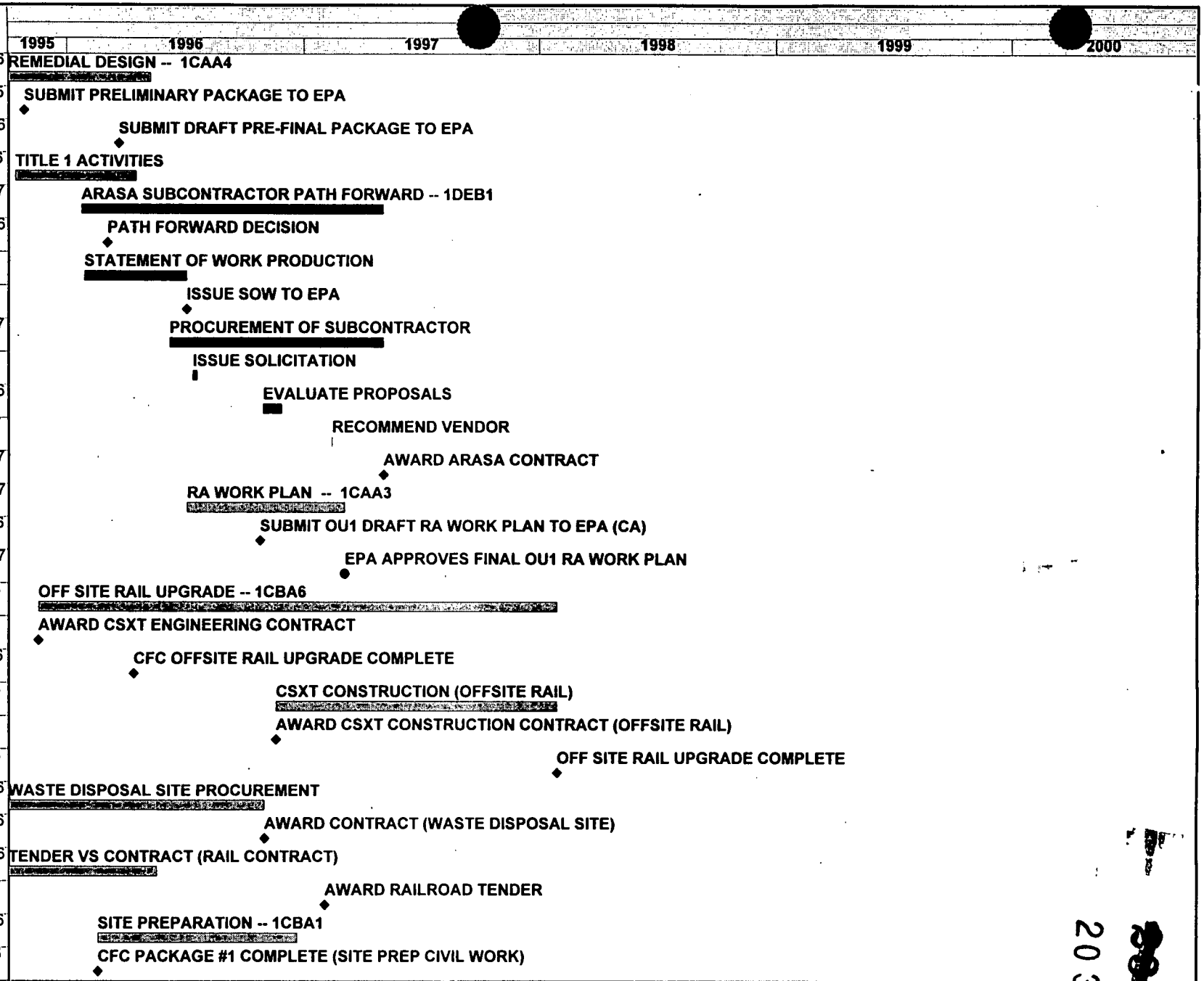

Project Start	01JAN90	Early Bar
Project Finish	27JUN05	Progress Bar
Data Date	01OCT95	Critical Activity
Plot Date	19MAR96	

© Primavera Systems, Inc.

BBBC

Sheet 1 of 2

OU-1 ADS 46-B2 WASTE PIT REMEDIATION

BOB FELLMAN

G:\46B2\CP\BOB2

2038

594

Activity ID	Early Start	Early Finish
1CBA100470		07MAY96
1CBA100502	10APR96	23APR96
1CBA100600		20DEC96
1CAA801125		27FEB96
1CAA801225		19JUL96
1CAA803812		07MAY96
1CBA400000	24OCT96	30DEC97
1CBA400355		30DEC97
1CBA205105	02OCT97	20MAR98
1CBA205110	23MAR98	20APR98
1CBA205205	14JAN98	08APR98
1CBA205210	09APR98	23APR98
1CBA205305	29OCT97	30DEC97
1CBA205310	31DEC97	14JAN98
1CBA201025	29JAN98	04FEB98
1CBA202051	02MAY97	27JUN05
1CBA208410	02MAY97	30SEP97
1CBA208440	01OCT97	09APR98
1CBA208450	24APR98	01JUL98
1CBA208500		01JUL98
1CBA208700	01OCT97	30SEP98
1CBA208750	23JUN98	30SEP98

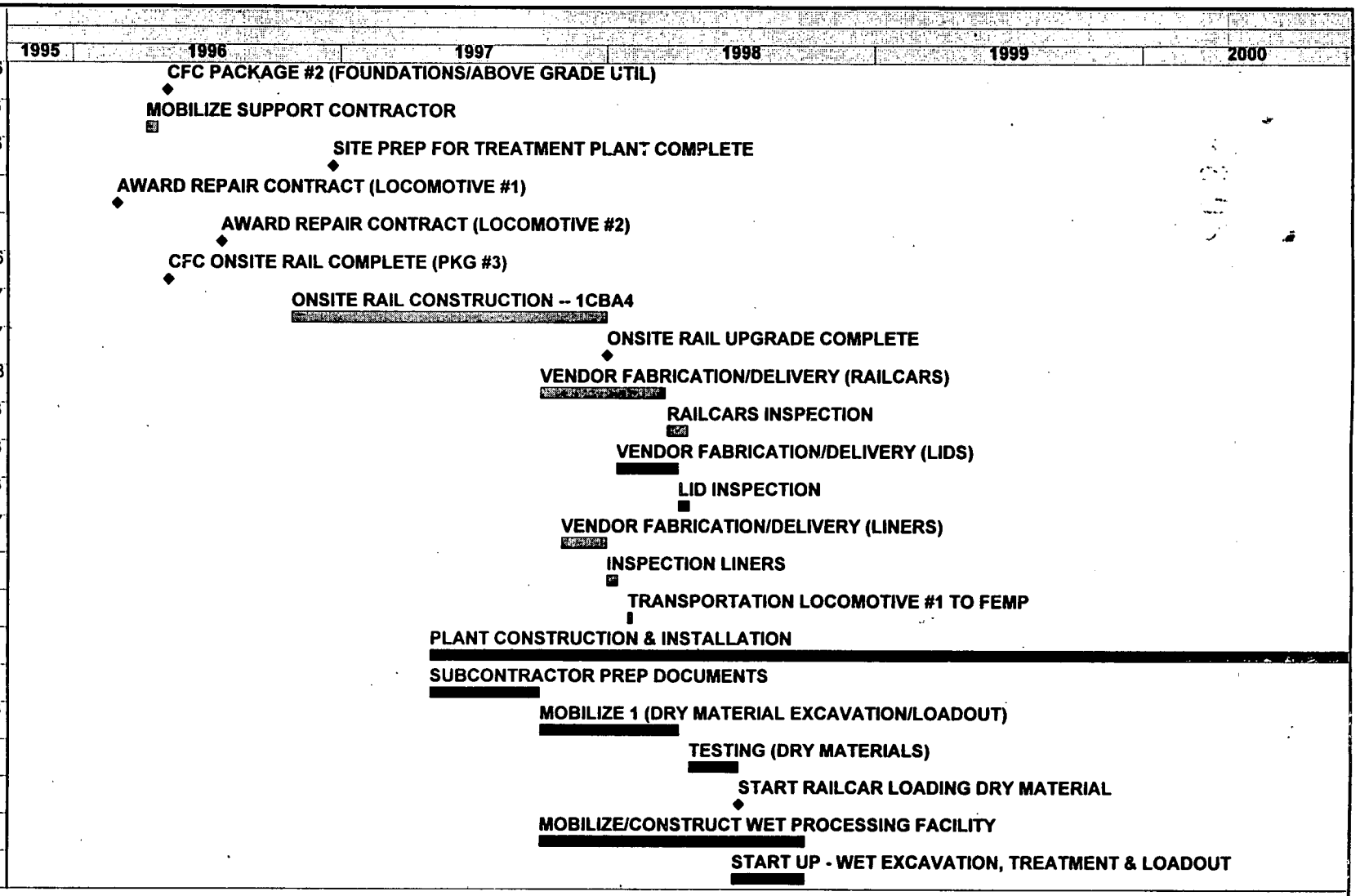

595