EDC

TEST PAD WORK PLAN

ON-SITE DISPOSAL FACILITY

REVISION 0
APRIL 1996

United States Department of Energy
Fernald Environmental Management Project
Fernald, Ohio

prepared by
GeoSyntec Consultants
1100 Lake Hearn Drive, NE, Suite 200
Atlanta, Georgia 30342

under
Fernald Environmental Restoration Management Corporation
Subcontract 95PS005028

Department of Energy

Ohio Field Office
Fernald Area Office
P. O. Box 538705
Cincinnati, Ohio 45253-8705
(513) 648-3155

APR 29 1996

DOE-0848-96

Mr. James A. Saric, Remedial Project Director
U.S. Environmental Protection Agency
Region V - SRF-5J
77 West Jackson Boulevard
Chicago, Illinois 60604-3590

Mr. Tom Schneider, Project Manager
Ohio Environmental Protection Agency
401 East 5th Street
Dayton, Ohio 45402-2911

Dear Mr. Saric and Mr. Schneider:

RESPONSE TO COMMENTS ON THE ON-SITE DISPOSAL FACILITY TEST PAD WORK PLAN

The Department of Energy (DOE) is pleased to submit the enclosed Response to Comments and revised On-Site Disposal Facility (OSDF) Test Pad Work Plan. Draft responses were faxed on April 10, 1996, for your initial review. This Response to Comments reflects discussions held between the U.S. Environmental Protection Agency (U.S. EPA), Ohio Environmental Protection Agency (OEPA), DOE, and the Fernald Environmental Restoration Management Corporation (FERMCO) regarding the draft responses. If there are no additional comments from the U.S. EPA or OEPA, the enclosed document will stand as the Final OSDF Test Pad Work Plan.

If you have any questions regarding this submittal, please contact Rod Warner at (513) 648-3156.

Sincerely,

for Johnny W. Reising
Fernald Remedial Action
Project Manager

FN:Jalovec

Enclosure: As Stated

Recycled and Recyclable

cc w/enc:

G. Jablonowski, USEPA-V, 5HRE-8J
Manager, TPSS/DERR, OEPA-Columbus
T. Schneider, OEPA-Dayton (3 copies of enc.)
F. Bell, ATSDR
D. S. Ward, GeoTrans
R. Vandegrift, ODOH
S. McLellan, PRC
J. Harmon, FERMCO/90
T. Hagen, FERMCO/65-2
AR Coordinator, FERMCO/78

cc w/o enc:

R. Nace, EM-423, GTN
J. Patterson, EM-423/GTN
S. Peterman, DOE-FN
J. Reising, DOE-FN
R. Warner, DOE-FN
S. Garland, FERMCO/52-2
T. Hagen, FERMCO/65-2
M. Hickey, FERMCO/52-2
U. Kumthekar, FERMCO/52-2
C. Little, FERMCO/2
N. Weatherup, FERMCO/52-2
M. Yates, FERMCO/9

No.21

265

TEST PAD WORK PLAN

ON-SITE DISPOSAL FACILITY

April 1996
Revision 0

United States Department of Energy

Fernald Environmental Management Project
Fernald, Ohio

Prepared by

GeoSyntec Consultants
1100 Lake Hearn Drive, NE, Suite 200
Atlanta, Georgia 30342

Under

Fernald Environmental Restoration Management Corporation
Subcontract 95PS005028

00000

ACRONYM LIST

APZ	Acceptable Permeability Zone
ARAR	Applicable or Relevant and Appropriate Requirement
ASCE	American Society of Civil Engineers
ASTM	American Society of Testing and Materials
CERCLA	Comprehensive Environmental Response, Compensation, and Liability Act
CFR	Code of Federal Regulations
CQA	Construction Quality Assurance
DCP	Design Criteria Package
DOE	United States Department of Energy
DQO	Data Quality Objectives
E&S	Erosion and Sediment
FS	Feasibility Study
FEMP	Fernald Environmental Management Project
FERMCO	Fernald Environmental Restoration Management Corporation
GCL	Geosynthetic Clay Liner
H&S	Health and Safety
OAC	Ohio Administrative Code
OEPA	Ohio Environmental Protection Agency
OMC	Optimum Moisture Content
OSDF	On-Site Disposal Facility
OSHA	Occupational Safety and Health Administration
OU	Operable Unit
OU2	Operable Unit 2
PI	Plasticity Index
RA	Remedial Action
RD	Remedial Design
ROD	Record of Decision
SDRI	Sealed Double-Ring Infiltrometer
TPPFR	Test Pad Program Final Report
TPWP	Test Pad Work Plan
TSB	Two Stage Borehole
USEPA	United States Environmental Protection Agency

TABLE OF CONTENTS

1. INTRODUCTION 1-1

1.1 Background and Purpose 1-1
1.2 Program Requirements 1-2
1.3 Program Scope 1-3
1.4 Organization of TPWP 1-4

2. OVERVIEW OF TEST PAD PROGRAM 2-1

2.1 Introduction 2-1
2.2 Objectives of the Test Pad Program 2-2
2.3 Methodology of Test Pad Program 2-3

2.3.1 Introduction 2-3
2.3.2 Roles and Responsibilities 2-4
2.3.3 Pre-Construction Laboratory Testing 2-5
2.3.4 Test Pad Construction 2-5
2.3.5 Field Permeability Testing 2-6
2.3.6 Construction Recommendations and Reporting 2-7

3. EXISTING INFORMATION ON THE BROWN TILL 3-1

3.1 Introduction 3-1
3.2 Clay Material Criteria 3-2
3.3 Summary of Previous Geotechnical Investigations 3-2
3.4 Analysis of Existing Geotechnical Data 3-10
3.5 Findings 3-12

4. PRE-CONSTRUCTION LABORATORY TESTING PROGRAM 4-1

4.1 Introduction 4-1
4.2 Sampling and Laboratory Testing 4-1
4.3 Laboratory Acceptable Permeability Zone 4-4
4.4 Selection of Target Compaction Conditions 4-4

TABLE OF CONTENTS (continued)

5. TEST PAD DESIGN 5-1

5.1 Test Pad Layout 5-1
5.2 Erosion Control and Stormwater Management 5-3
5.3 Excavation Dewatering 5-4

6. TEST PAD CONSTRUCTION 6-1

6.1 Introduction 6-1
6.2 Pre-construction Meeting 6-1
6.3 Site Preparation 6-2
6.4 Borrow Material Preparation 6-3
6.5 Placement and Compaction of Lifts 6-4
6.6 Surveying 6-6

7. TEST PAD CQA PLAN 7-1

7.1 Overview 7-1
7.2 CQA Personnel Requirements 7-1
7.3 CQA Activities 7-2

7.3.1 Laboratory Testing Program 7-2
7.3.2 Site and Subgrade Preparation 7-3
7.3.3 Test Pad Construction 7-3

7.4 Documentation 7-6

8. FIELD PERMEABILITY TESTING 8-1

8.1 Introduction 8-1
8.2 Sealed Double-Ring Infiltrometer Testing 8-1

8.2.1 Overview 8-1
8.2.2 Selection of SDRI Test 8-2
8.2.3 Installation of SDRI 8-5
8.2.4 Monitoring 8-7
8.2.5 SDRI Decommissioning 8-8

TABLE OF CONTENTS (continued)

8.3 Post-Construction Laboratory Testing 8-8
8.4 Evaluation 8-9

9. TEST PAD DECOMMISSIONING 9-1

10. DEVELOPMENT OF CONSTRUCTION SPECIFICATIONS 10-1

10.1 Introduction 10-1
10.2 Pre-Construction Laboratory Qualification Testing 10-1
10.3 Borrow Material Preparation Procedures 10-2
10.4 Placement and Compaction Procedures 10-2
10.5 CQA Testing During Construction 10-3

11. REPORTING 11-1

12. SCHEDULE 12-1

REFERENCES 1

TABLES
FIGURES

APPENDIX A: ALTERNATIVE TO OAC PRESCRIPTIVE SPECIFICATIONS FOR COMPACTED SOIL LINERS

APPENDIX B: SELECT ASTM STANDARDS

APPENDIX C: TEST PAD CONSTRUCTION SPECIFICATIONS

APPENDIX D: TECHNICAL NOTE ON SHELBY-TUBE SAMPLING

APPENDIX E: CQA STANDARD FIELD DOCUMENTATION FORMS

APPENDIX F: DATA QUALITY OBJECTIVES

APPENDIX G: HEALTH AND SAFETY PLAN

LIST OF TABLES

Table 3-1. Applicable or Relevant and Appropriate Requirements for Compacted Clay Liner and Cap Materials

Table 3-2. Summary of Geotechnical Data on Brown Clay

Table 3-3. Statistical Comparison of Brown Clay Geotechnical Properties

Table 5-1. Applicable or Relevant and Appropriate Requirements for Test Pad Program

LIST OF FIGURES

Figure 1-1. Preliminary Liner and Cover System Design - On-Site Disposal Facility

Figure 2-1. Test Pad Program Location Map
Figure 2-2. Acceptable Permeability Zone (APZ) Concept
Figure 2-3. Target Compaction Condition Concept

Figure 3-1. Geologic Cross Section - OSDF Area
Figure 3-2. Variability of Clay Content
Figure 3-3. Variability of Fines Content
Figure 3-4. Variability of Plasticity Index
Figure 3-5. Variability of Standard Proctor Optimum Moisture Content
Figure 3-6. Variability of Standard Proctor Maximum Dry Density

Figure 4-1. Test Pad Site Plan

Figure 5-1. Test Pad Details
Figure 5-2. Test Pad Construction Site Details
Figure 5-3. Erosion and Sediment Control Details
Figure 5-4. Culvert Details

Figure 8-1. Schematic Diagram of SDRI Installed on Test Pad

Figure 12-1. Schedule of Test Pad Program

1. INTRODUCTION

1.1 Background and Purpose

The Fernald Environmental Management Project (FEMP), located in Fernald, Ohio, is undergoing remediation pursuant to the Comprehensive Environmental Response, Compensation, and Liability Act (CERCLA). Remediation at the FEMP is being addressed as five interrelated sets of activities, with each set identified as an "operable unit" (OU).

As described in the *Final Record of Decision* (ROD) *for Remedial Actions at Operable Unit 2* (OU2) [DOE, 1995c], the selected remedy for OU2 involves construction of an on-site disposal facility (OSDF) for permanent disposal of impacted material, including soil, flyash, lime sludge, and solid waste excavated as part of the OU2 remedial action. The conceptual design of the OSDF was developed as an alternative in the *Final Feasibility Study* (FS) *Report for Operable Unit 2* [DOE, 1995b] and identified as the selected remedial alternative in the OU2 ROD.

On-site disposal of impacted material is also the preferred alternative for Operable Unit 3 and Operable Unit 5 at the FEMP. The final Records of Decision for these operable units are anticipated in mid and early 1996, respectively. In addition, the material sent to the OSDF by OU3 may include contributions from OU1 and OU4. All material destined for OSDF disposal must meet the OSDF waste acceptance criteria (WAC). The OU2 ROD has established an initial WAC for the OSDF for 346 picoCuries/gram (pCi/g) of uranium-238 (U-238) or 1030 parts per million (ppm) total uranium.

DOE intends to build only one on-site disposal facility. Therefore, the OSDF will be designed to accommodate all or any portion of the total volume of impacted material meeting the WAC that results from remediation of the operable units. The total volume of material from all operable units is estimated to be 2.5 million bank/unbulked (i.e., in-place prior to excavation) cubic yards (1.9 million bank/unbulked cubic meters). The engineered features of the OSDF will include a liner system and final cover system (Figure 1-1), both of which contain layers of compacted low-permeability clay.

The design approach for the OSDF, as well as the other components of the OU2 selected remedy, is presented in the *Draft Remedial Design Work Plan for Remedial Actions at Operable Unit 2* [DOE, 1995d]. Based on this document, the design will be implemented in three phases:

- *Phase 1:* design of a haul road to transport impacted material from the south field and inactive and active flyash pile areas to the OSDF;
- *Phase 2:* design of the OSDF; and
- *Phase 3:* design of the excavation and restoration of the waste unit areas.

The Phase 2 component of the design described in DOE [1995d] identifies a number of required activities associated with the design of the OSDF. One of these activities is to perform a test pad program to evaluate the suitability of the low permeability clay materials proposed for use in the OSDF liner and final cover systems. The test pad program is the subject of this work plan.

1.2 Program Requirements

The OU2 ROD contains applicable or relevant and appropriate requirements (ARARs) that must be satisfied in the OU2 remedial design/remedial action (RD/RA). The ARARs for OU2 present detailed requirements for the test pad program. These detailed requirements are described in Section 2 of this Test Pad Work Plan (TPWP).

In addition to the ARARs, the Fernald Environmental Restoration Management Corporation (FERMCO) has established procedural requirements for the test pad program. These procedural requirements are:

- submit draft TPWP for review by DOE, USEPA, and Ohio EPA;
- incorporate comments on the TPWP;

- issue the final TPWP prior to completion of the intermediate OSDF design package;
- perform field and laboratory testing prior to, and during construction, and evaluate the test pad results; and
- prepare and submit a Test Pad Program Final Report (TPPFR) prior to completion of the OSDF final design package.

This TPWP has been prepared pursuant to the requirements identified above. The contents of the TPWP are intended to satisfy the relevant OU2 ARARs. The contents are also intended to satisfy guidelines set forth in the *Design Criteria Package, On-Site Disposal Facility* [GeoSyntec, 1995].

1.3 Program Scope

The scope of the TPWP includes establishing:

- contractor responsibilities and qualifications requirements;
- procedures for test pad construction;
- field and laboratory quality control and quality assurance testing requirements;
- field and laboratory performance testing requirements;
- procedures for interpreting laboratory test results;
- requirements for documentation and reporting; and
- requirements for preparing construction specifications and drawings for test pad program implementation.

1.4 Organization of TPWP

The TPWP is organized as follows:

- an overview of the test pad program is presented in Section 2;
- information on the clay borrow soils that will be used in the test pad program is described in Section 3;
- the laboratory testing program to be conducted prior to test pad construction is described in Section 4;
- the layout and civil design of the test pads is presented in Section 5;
- a summary of the test pad construction activities is presented in Section 6;
- construction quality assurance (CQA) field monitoring and testing requirements for test pad program are described in Section 7;
- procedures for field performance (i.e., "in-situ permeability") testing of the test pads are presented in Section 8;
- test pad decommissioning procedures are summarized in Section 9;
- a description of how the results of the test pad program will be used to develop OSDF construction specifications and recommendations is presented in Section 10;
- reporting requirements related to construction, monitoring, and testing of the test pads are presented in Section 11; and
- the schedule for the test pad program is described in Section 12.

LINER AND COVER SYSTEM DESIGN
ON-SITE DISPOSAL FACILTY

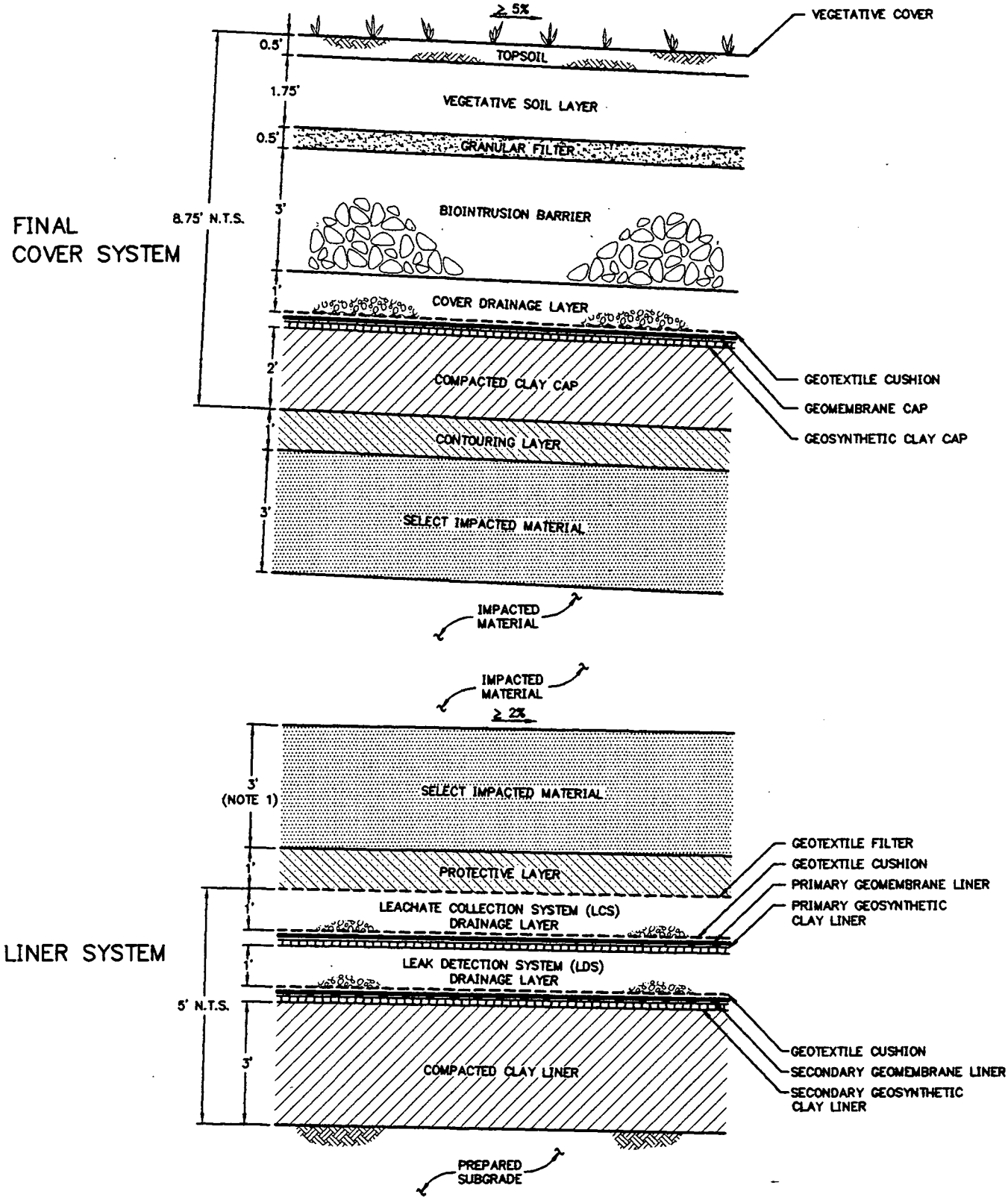

NOTE:

1. SELECT IMPACTED MATERIAL THICKNESS ABOVE LINER SYSTEM MAY BE DECREASED TO 2 FEET IF THE FIRST LIFT OF MATERIAL TO BE PLACED OVER THE SELECT IMPACTED MATERIAL CONSISTS OF SOIL OR RELATIVELY SMALL SIZE DEBRIS THAT CAN BE PLACED IN CONTROLLED LIFTS.

GEOSYNTEC CONSULTANTS
ATLANTA, GEORGIA

FIGURE NO.	1-1
PROJECT NO.	GE3900-04
DOCUMENT NO.	F9530008.CDO
FILE NO.	3900A017.DWG

2. OVERVIEW OF TEST PAD PROGRAM

2.1 Introduction

The OSDF liner system and final cover system will each include a compacted clay component. The OU2 ARARs require that the compacted clay component of the liner system (i.e., the secondary clay liner in Figure 1-1 and hereafter referred to as the compacted clay liner) be at least 3 ft (0.9 m) thick (when used in conjunction with a geosynthetic clay liner (GCL) as proposed for the OSDF) and have a hydraulic conductivity not more than 1 x 10^{-7} cm/s.

The OU2 ARARs require that the compacted clay component of the final cover system (i.e., compacted clay cap in Figure 1-1) be at least 18 in. (0.45 m) thick and have a hydraulic conductivity not more than 1 x 10^{-6} cm/s. The proposed design thickness of the clay cap (24 in. (0.6 m)) is thicker than required by the OU2 ARARs; this greater thickness facilitates cap construction, improves cap reliability, and is consistent with USEPA guidance [USEPA, 1991]. A hydraulic conductivity of not more than 1 x 10^{-7} cm/s for the clay cap is specified for the OSDF in order to be consistent with the value used in the *Final Feasibility Study Report for Operable Unit 2* [DOE, 1995b]; this criterion is more stringent than the maximum permeability of 1 x 10^{-6} cm/s specified by the OU2 ARARs.

The currently proposed source of clay for the compacted clay liner and cap is a brown till that will be obtained from excavation for the base of the OSDF and from the on-site East Field borrow area (hereafter referred to only as the borrow area) shown in Figure 2-1. The brown till layer is the upper layer of the soil stratigraphy (excluding topsoil) beneath the FEMP. The thickness of the brown till ranges from approximately 10 to 15 ft (3 to 4.5 m). An analysis of available data on the engineering characteristics of the brown till is presented in Section 4 of the TPWP. The analysis indicates that the relevant geotechnical properties (i.e., particle size distribution, Atterberg limits, clay fraction, soil classification, and standard Proctor optimum moisture content) of the brown till are not highly dependent on the lateral location within the OSDF footprint and borrow area, but that the material does contain increasing amounts of sand with increasing depth. Since sand content may affect the

relationship between compaction dry density, moisture content, and hydraulic conductivity [Othman and Luettich, 1994], a delineation is made in this TPWP between an upper horizon and a lower horizon brown till. Two test pads will be constructed, one using upper horizon brown clay and the other using lower horizon brown clay.

As indicated in the preceding paragraph, the focus of this TPWP is on the brown till. A gray till layer underlies the brown till, and it, too, has properties that make it a candidate material for compacted clay liner and cap construction. It is anticipated that the clay used in OSDF construction will be brown till, not gray till. However, should the OSDF design at some point call for the use of gray till, a separate test pad program will be undertaken to evaluate this material. If a gray till test pad program is needed, it will be designed to satisfy the same criteria as used to develop the brown till test pad program. Gray till will only be used for OSDF construction if it is found that an inadequate supply of brown till exists on site. The need for gray till will be identified (through monitoring of the progress of brown till borrow area development) at least two years prior to exhausting the brown till borrow source, thereby providing adequate time to perform a test pad program using the gray till.

2.2 Objectives of the Test Pad Program

The purpose of the test pad program is to provide information regarding the hydraulic conductivity and compaction characteristics of the soils (upper horizon brown till and low horizon brown till) that will be used for construction of the OSDF compacted clay liner and cap. The information obtained during the test pad program will be used to qualify the upper horizon brown till and lower horizon brown till borrow sources (i.e., OSDF area and East Field borrow area) and establish procedures for construction using these materials.

To demonstrate that the brown till can meet the criteria for compacted clay liner and cap materials, the test pad program will establish that:

- the till materials can be compacted using field construction procedures to a hydraulic conductivity of not more than 1 x 10^{-7} cm/s for the compacted clay liner and compacted clay cap; and

- both the upper horizon brown till and lower horizon brown till meet the other criteria for compacted clay liner and cap materials prescribed in the Ohio Solid Waste Disposal Regulations, Ohio Administrative Code (OAC) 3745-27-08(C)(1), or alternatively, where criteria are not met, that the materials and techniques proposed for compacted clay liner and cap construction satisfy the alternative demonstration requirement of OAC 3745-27-08(C).

Also, to meet the requirements of OAC 3745-27-08(C)(1)(m), the test pad will:

- be designed such that the proposed tests are appropriate and their results are valid;

- be constructed to establish procedures that will result in a satisfactory hydraulic conductivity; procedures will include:
  - soil processing;
  - lift thickness;
  - range of moisture content necessary to achieve the desired compaction;
  - type, weight, and number of passes of construction equipment; and

- be constructed prior to OSDF construction.

2.3 Methodology of Test Pad Program

2.3.1 Introduction

The test pad program will consist of the following phases of work:

- laboratory testing prior to test pad construction (hereafter referred to as the pre-construction laboratory testing program);

- test pad construction;
- field permeability testing; and
- development of construction specifications and CQA plan.

Brief descriptions of the four phases of work are provided in the following subsections. First, however, roles and responsibilities of the project participants are described.

2.3.2 Roles and Responsibilities

An earthwork contractor (i.e., the Test Pad Contractor) will be procured by FERMCO (i.e., the Construction Contracts Manager) to construct the test pads. The Test Pad Contractor's scope of work is presented in Section 6 of this TPWP.

The architect/engineer (A/E) who designed this test pad program will serve as the CQA Engineer for implementation of the program. The CQA Engineer will provide laboratory testing and CQA services during construction of the test pads, conduct the field permeability tests, develop the construction specifications and CQA plan for compacted clay liner and cap construction, and prepare the test pad program final report. The CQA Engineer will also provide resident engineering services during test pad construction. The required qualifications of the CQA personnel and the scope of CQA activities are presented in Section 7 of the TPWP. The Construction Contracts Manager has prepared a health and safety plan (H&S plan) for implementation of the test pad program. A copy of the H&S plan will be provided by the Construction Contracts Manager to project participants. The Construction Contracts Manager will oversee implementation of the H&S plan during test pad program field activities.

2.3.3 Pre-Construction Laboratory Testing

Pre-construction laboratory testing will be conducted on bulk samples of the upper horizon brown till and lower horizon brown till. The purpose of the pre-construction laboratory testing program is to establish acceptable permeability zones (APZs) for each till material. The APZs will define the compaction conditions required to produce a compacted clay cap and liner having a hydraulic conductivity not more than 1×10^{-7} cm/s. The APZ concept is shown in Figure 2-2. It should be noted that the APZs for the upper horizon brown till and the lower horizon brown till will likely be somewhat different, due to the differing sand content in these two materials. The APZ for a particular soil is also dependent on construction equipment and methods. Details of the laboratory testing program are presented in Section 4 of this TPWP.

2.3.4 Test Pad Construction

Two test pads will be constructed in an area located within the proposed OSDF footprint. The proposed test pad location is shown in Figure 2-1. Each test pad will consist of six lifts and have a final thickness of 3 ft (0.9 m). A 3-ft (0.9-m) thick test pad is proposed (even though the ARAR allows a minimum thickness of 2 ft (0.6 m)) because: (i) it is the same thickness as the OSDF compacted clay liner; and (ii) it may potentially provide more reliable results than a thinner test pad since it reduces the potential for interfering effects of the natural ground in the test results. Furthermore, USEPA guidance [USEPA, 1993] indicates the following: "*The thickness of the test pad is usually not less than the thickness of the soil liner proposed for a facility but may be as little as 0.6 to 0.9 m (2 to 3 feet) if thicker liners are to be employed at full scale.*"

Each test pad will contain three lanes with target compaction conditions as summarized below.

- Lane 1 will have target conditions selected to fall within the "lower" portion of the APZ established as indicated in Section 2.3.2 (i.e., using the results of the pre-construction laboratory testing program).

- Lane 2 will have target compaction conditions selected to fall within the "midrange" portion of the APZ.

- Lane 3 will have target compaction conditions selected to fall within a "upper" portion of the APZ.

The three target compaction conditions described above are illustrated in Figure 2-3. Details of the test pad design and the proposed test pad construction procedures are presented in Sections 5 and 6, respectively, of this TPWP.

2.3.5 Field Permeability Testing

After construction of the test pads, field permeability tests will be performed on Lanes 1 and 2 of each test pad. The field tests will be performed using sealed double-ring infiltrometers (SDRIs). If the measured hydraulic conductivities of these first SDRI tests meet the requirements for the compacted clay liner and cap, field testing of Lane 3 will not be performed. If, however, unanticipated results are obtained for either Lanes 1 or 2, then SDRI testing of Lane 3 may be performed. This sequencing of the Lane 3 SDRI test is acceptable from a schedule standpoint because experience has shown that unanticipated SDRI test results become quickly evident after the start of the test. If unanticipated results were to be observed in the Lane 1 SDRI test, the SDRI could be quickly decommissioned and reinstalled in Lane 3. The project schedule presented in Section 12 of this TPWP is designed to accommodate this sequence of events.

Details of the field permeability testing program are presented in Section 8 of this TPWP. The rationale for using the SDRI test, rather than other types of available field tests, in the test pad program is also discussed in Section 8.

2.3.6 Construction Recommendations and Reporting

Based on the findings of the test pad program, construction recommendations and a CQA plan for construction of the compacted clay liner and cap components of the OSDF will be developed. The guidelines for developing these requirements are presented in Section 10 of the TPWP.

ACCEPTABLE PERMEABILITY ZONE (APZ) CONCEPT

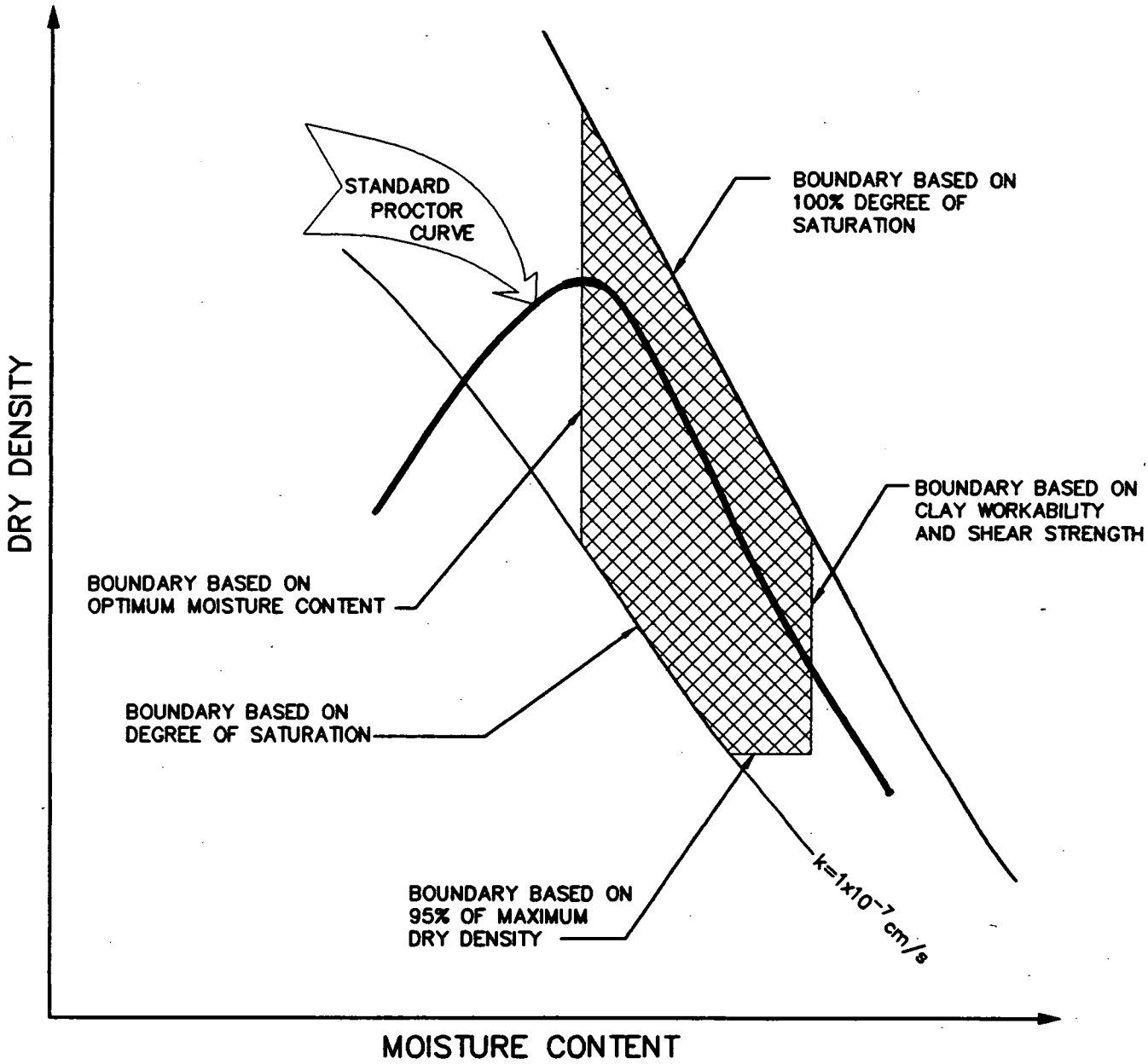

LEGEND

ACCEPTABLE PERMEABILITY ZONE

NOTE: FIGURE ADAPTED FROM DANIEL [1990].

000024

GEOSYNTEC CONSULTANTS
ATLANTA, GEORGIA

FIGURE NO.	2-2
PROJECT NO.	GE3900-4.1
DOCUMENT NO.	F9530008
FILE NO.	3900A002

TARGET COMPACTION CONDITION CONCEPT

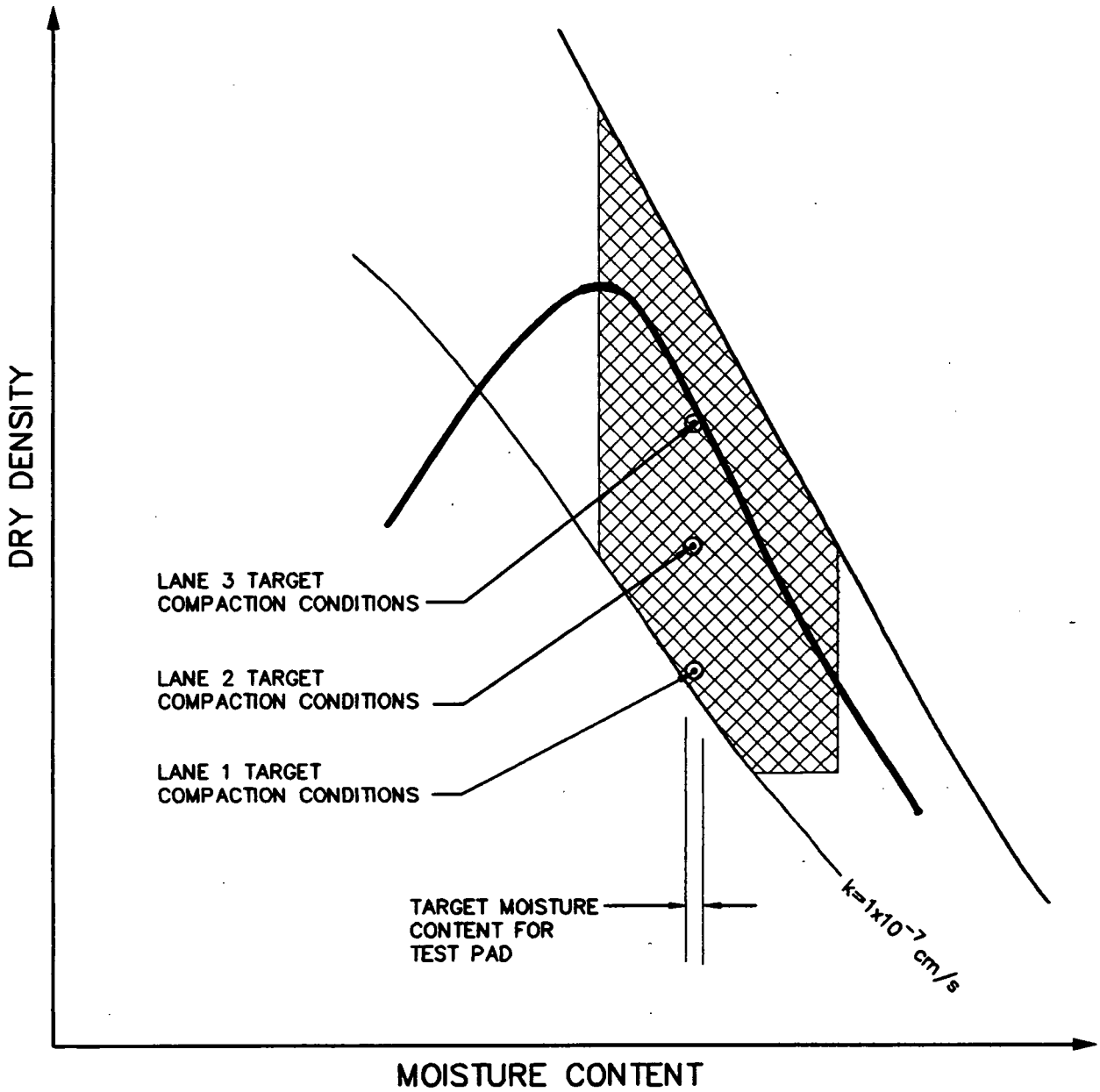

LEGEND

APZ FOR CLAY LINER AND CLAY CAP

GEOSYNTEC CONSULTANTS
ATLANTA, GEORGIA

FIGURE NO.	2-3
PROJECT NO.	GE3900-4.1
DOCUMENT NO.	F9530008
FILE NO.	3900A001

3. EXISTING INFORMATION ON THE BROWN TILL

3.1 Introduction

The source of the compacted clay liner and cap material considered in this TPWP is the on-site brown till located in the upper 10 to 15 ft (3.0 to 4.5 m) of the OSDF area and East Field borrow area. A geologic cross section through the OSDF area showing the relative location of the brown till in the soil stratigraphy is presented in Figure 3-1. Geotechnical investigations have previously been conducted on the brown till in the OSDF area and borrow area. The existing information is summarized in this section and an evaluation is presented to: (i) document that the brown till from the OSDF area and borrow area has properties satisfying the OU2 ARARs; and (ii) analyze the variability of the brown till with respect to sample depth and lateral location.

The remainder of this section is organized as follows:

- a review of the clay material properties required by the ARARs is presented in Section 3.2;
- a summary of previous geotechnical investigations providing test results for the brown till is presented in Section 3.3;
- a summary and analysis of currently available geotechnical laboratory test results on the brown till is presented in Section 3.4; and
- conclusions regarding the use of the brown till for the test pads is presented in Section 3.5.

3.2 Clay Material Criteria

OU2 ARARs pertaining to the compacted clay liner and cap are from OAC 3745-27-08(C). These applicable requirements, obtained from the OU2 ROD [DOE, 1995c], are summarized in Table 3-1. The requirements pertaining specifically to the clay material properties are:

- 100 percent of the particles shall have a maximum dimension not greater than 2 in. (50 mm);
- not more than 10 percent of the particles, by weight, shall have a dimension greater than 0.75 in. (19 mm);
- at least 50 percent of the particles, by weight, shall pass through a U.S. No. 200 standard sieve;
- at least 25 percent of the particles, by weight, shall have a maximum dimension not greater than 0.002 mm; and
- the compacted material shall have a hydraulic conductivity of not more than 1×10^{-7} cm/s for the compacted clay liner system and compacted clay cap.

3.3 Summary of Previous Geotechnical Investigations

A number of geotechnical investigations have been performed from 1991 to 1995 for purposes of evaluating geotechnical subsurface conditions at the FEMP property (and particularly in the OSDF area and on-site borrow area), and to obtain samples of brown and gray clay for geotechnical laboratory testing. Information from the following reports is summarized and analyzed in this section.

- "*On-Site Disposal Cell Pre-Design Activities Engineering Report*" [Parsons, 1994]. This report contains stratigraphic information obtained from 10 borings located within the on-site borrow area; the report also contains laboratory test results for soil samples obtained from the borings.

TABLE 3-1

Applicable or Relevant and Appropriate Requirements (ARARs) for Compacted Clay Liner and Cap Materials [DOE, 1995c] FEMP On-Site Disposal Facility[1]

CITATION	REQUIREMENT Recompacted Soil Liner
Ohio Solid Waste Disposal Regulations OAC 3745-27-08 (C)(1)	The recompacted soil liner shall be: • constructed using loose lifts 8 in. thick with a maximum permeability of 1 x 10^{-7} cm/s. • constructed of a soil with a maximum clod size of 3 in. or half the lift thickness, whichever is less. • constructed of soil with: - 100% of the particles having a maximum dimension not greater than 2 in. - not more than 10% of the particles, by weight, having a dimension greater than .75 in. - not less than 50% of the particles, by weight, passing through the 200-mesh sieve. - not less than 25% of the particles, by weight, having a maximum dimension not greater than 0.002 millimeters. • compacted to at least 95% of the maximum standard Proctor dry density using ASTM D 698 or at least 90% of the maximum modified Proctor dry density using ASTM D 1557. • compacted at a moisture content at or wet of optimum. Alternatives for the above requirements may be used if it is demonstrated to the satisfaction of the Director that the materials and techniques will result in each lift having a maximum permeability of 1 x 10^{-7} cm/s. Additionally, the recompacted soil liner shall: • not be comprised of solid waste. • be constructed using the same number of passes and lift thickness, and the same or similar type and weight of compaction equipment established through a test pad program. • placed on the bottom and exterior sides of the landfill and have a minimum bottom slope of two percent and a maximum slope based on: - compaction equipment limitations; - slope stability; - maximum friction angle between any soil-geosynthetic interface and between any geosynthetic-geosynthetic interface; and - resistance of geosynthetics and geosynthetic seams to tensile forces. • constructed on a prepared surface that shall: - be free of debris, foreign material, and deleterious material; - be able to bear the weight of the landfill and its construction operations without causing or allowing a failure of the liner to occur through settling; and - not have any abrupt changes in grade that may result in damage to geosynthetics.

TABLE 3-1 (continued)

Applicable or Relevant and Appropriate Requirements (ARARs) for Compacted Clay Liner and Cap Materials [DOE, 1995c] FEMP On-Site Disposal Facility[1]

CITATION	REQUIREMENT
	Recompacted Soil Liner
Ohio Solid Waste Disposal Regulations OAC 3745-27-08 (C)(15)	**Cap System Recompacted Soil Barrier Layer[2]**
	The recompacted soil barrier layer of the cap shall be: • a minimum of 18 inches thick and constructed in accordance with the specifications outlined above for construction of the recompacted soil liner for a landfill facility ((C)(1)(a) to (C)(1)(g) and (C)(1)(m) to (C)(1)(o) of OAC 3745-27-08) with the exception that the maximum permeability of the recompacted soil barrier shall be 1×10^{-6} cm/s; • be constructed of a soil with 100% of the particles having a maximum dimension not greater than 2 inches and with not more than 10% of the particles, by weight, having a dimension greater than 0.75 inches. • be compacted to at least 95% of the maximum "Standard Proctor Density" using ASTM D 698 or at least 90% of the maximum "Modified Proctor Density" using ASTM D 1557.

Notes:

1. In this TPWP, the following terminology is used: compacted clay liner = recompacted soil liner in Ohio Solid Waste Disposal Regulations; and compacted clay cap = cap system recompacted soil barrier layer of the Ohio regulations.

2. More stringent criteria for clay cap thickness (24 inches) and maximum permeability (1×10^{-7} cm/s) have been adopted in the actual OSDF design.

- "*Disposal Facility Pre-Design Geotechnical Investigation Soil Investigation Data Report Summary Document*" [Parsons, 1995a]. This report contains stratigraphic information obtained from 14 borings located within the OSDF area; this report also contains laboratory test results for soil samples obtained from the borings.

- "*Geotechnical Investigation Report On-Site Disposal Facility*" [Parsons, 1995b]. This report contains stratigraphic information and obtained from 36 borings located within the OSDF area; this report also contains laboratory test results for soil samples obtained from the borings.

The reports listed above present findings from a total of 50 soil borings in the OSDF area and 10 soil borings in the borrow area. The information contained in the three reports listed above specifically related to the brown till is summarized in Table 3-2 and includes:

- boring location in terms of northing coordinate;

- sample depth;

- natural moisture content test results (ASTM D 2216);

- index test results, including Atterberg limits (ASTM D 4318), particle size distribution (ASTM D 422), and soil classification (ASTM D 2487);

- results of standard Proctor compaction tests (ASTM D 698).

It is also noted that a further geotechnical investigation of the borrow area is currently underway. The investigation being conducted is described in the Geotechnical Sampling and Testing Plan (GSTP) being implemented at the FEMP. When this current program is complete, the findings of the geotechnical investigation will be incorporated into this TPWP.

TABLE 3-2

Summary of Geotechnical Data on Brown Till
FEMP On-Site Disposal Facility

Boring Number	Sample Number	Borehole Northing[2]	Borehole Easting[2]	Sample Depth	Particle Size[3]			Atterberg Limits[4]			Standard Proctor Compaction[5]	
					Percentage Coarser than No. 200 Sieve	Percentage Passing No. 200 Sieve	Percentage Smaller than 0.005 mm	LL	PL	PI	Optimum Moisture Content (%)	Maximum Dry Density (pcf)
11468	403071	483039.84	1351018.65	2.0-4.5	22.6	77.4	40.0	47.2	17.9	29.3		
11468	403103	483039.84	1351018.65	2.0-6.5	23.8	76.2	37.0	45.3	16.2	29.1	16.7	110.5
11468	403074	483039.84	1351018.65	4.5-6.0	34.1	65.9	28.0	31.9	16.1	15.8		
11468	403077	483039.84	1351018.65	9.0-11.5	43.7	56.3	22.0	25.5	14.7	10.8		
11468	403104	483039.84	1351018.65	9.0-13.0	29.3	70.7	29.0	30.8	14.1	16.7	11.6	125.0
11469	402820	482830.31	1351298.75	1.5-3.0	3.9	96.1	37.0	45.1	21.1	24		
11469	402821	482830.31	1351298.75	3.0-5.5	20.5	79.5	32.0	37.1	14.9	22.2		
11469	402824	482830.31	1351298.75	3.0-7.5	27.2	72.8	35.0	36.1	15.1	21	13.9	118.5
11469	402826	482830.31	1351298.75	9.0-10.5	32.4	67.6	27.0	25.8	14.3	11.5		
11469	402828	482830.31	1351298.75	7.5-12.0	28.4	71.6	32.0	29.4	13	16.4	11.3	123.7
11471	402962	481282.81	1350976.29	1.5-3.0	5.9	94.1	34.0	51.9	28	23.9		
11471	402963	481282.81	1350976.29	3.5-6.0	3.8	96.2	41.0	50.5	18.4	32.1		
11471	402966	481282.81	1350976.29	3.0-7.5	3.9	96.1	39.0	50.5	19.3	31.2	19.3	105.7
11471	402978	481282.81	1350976.29	7.5-10.5	4.0	96.0	32.0	43.0	21.8	21.2	17.4	110.6
11471	402969	481282.81	1350976.29	10.5-11.5	62.1	37.9	12.0	NP	NP	NP		
11472	402939	479765.76	1350939.74	1.5-3.0	3.2	96.8	48.0	49.1	20.8	28.3		
11472	402940	479765.76	1350939.74	3.5-6.0	24.1	75.9	35.0	29.4	15.8	13.6		
11472	402958	479765.76	1350939.74	3.5-7.5	23.2	76.8	37.0	30.9	14	16.9	14.4	119.0
11472	402945	479765.76	1350939.74	9.5-11.5	55.1	44.9	18.0	24.5	13.1	11.4		
11472	402959	479765.76	1350939.74	9.0-12.0	39.4	60.6	29.0	28.7	13.8	14.9	12	124.9
11473	402918	480196.20	1350949.67	3.5-6.0	22.8	77.2	33.0	31.1	17.3	13.8		
11473	402923	480196.20	1350949.67	3.0-7.5	17.1	82.9	37.0	35.4	15.8	19.6	15.1	116.7
11473	402920	480196.20	1350949.67	6.5-8.5	28.1	71.9	35.0	29.3	15.6	13.7		
11473	402925	480196.20	1350949.67	7.5-12.0	23.1	76.9	38.0	31.0	14.8	16.2	13.7	120.6
11473	402922	480196.20	1350949.67	9.0-10.6	35.1	64.9	27.0	25.0	15.1	9.9		
11474	402891	480720.45	1351255.61	1.5-3.0	16.2	83.8	38.0	44.2	18.1	26.1		
11474	402892	480720.45	1351255.61	3.5-6.0	17.4	82.6	27.0	27.9	19.2	8.7		
11474	402896	480720.45	1351255.61	3.0-7.5	18.5	81.5	28.0	28.1	16.2	11.9	13.7	119.2
11474	402901	480720.45	1351255.61	7.5-12.0	23.8	76.2	29.0	26.2	13.8	12.4	12.8	122.6
11474	402898	480720.45	1351255.61	9.0-10.5	31.2	68.8	28.0	25.1	13.5	11.6		

Notes:
1. Data Compiled from Parsons [1994, 1995a, 1995b].
2. North American Datum 1983
3. ASTM D 422
4. ASTM D 4318 (LL = liquid limit; PL = plastic limit; and PI = plasticity index).
5. ASTM D 698

000031

265

TABLE 3-2 (continued)

Boring Number	Sample Number	Borehole Northing[2]	Borehole Easting[2]	Sample Depth	Particle Size[3]			Atterberg Limits[4]			Standard Proctor Compaction[5]	
					Percentage Coarser than No. 200 Sieve	Percentage Passing No. 200 Sieve	Percentage Smaller than 0.005 mm	LL	PL	PI	Optimum Moisture Content (%)	Maximum Dry Density (pcf)
11475	403251	479656.68	1351231.57	2.0-4.5	10.5	89.5	45.0	48.5	16.2	32.3		
11475	403264	479656.68	1351231.57	4.5-8.5	15.5	84.5	38.0	42.8	15.8	27	18.1	108.3
11475	403254	479656.68	1351231.57	6.5-9.0	13.2	86.8	44.0	49.2	26	23.2		
11475	403258	479656.68	1351231.57	11.0-13.5	27.2	72.8	35.0	33.3	17.4	15.9		
11476	402988	481586.18	1350980.71	1.5-3.0	27.9	72.1	34.0	40.7	17.8	22.9		
11476	402989	481586.18	1350980.71	3.5-6.0	15.3	84.7	40.0	30.5	15.9	14.6		
11476	402993	481586.18	1350980.71	3.5-7.5	22.6	77.4	37.0	33.0	14.8	18.2	15.2	113.3
11476	403010	481586.18	1350980.71	12.0-15.0	27.0	73.0	30.0	20.7	12.7	8	10.5	127.3
11477	402863	481831.18	1351279.71	1.5-3.0	6.9	93.1	37.0	37.8	20	17.8		
11477	402864	481831.18	1351279.71	3.5-6.0	28.3	71.7	28.0	30.4	15	15.4		
11477	402866	481831.18	1351279.71	3.5-7.5	19.7	80.3	39.0	42.2	16.6	25.6	14.6	116.0
11477	402868	481831.18	1351279.71	8.0-9.0	60.4	39.6	4.0	NP	NP	NP		
11477	402874	481831.18	1351279.71	14.0-18.0	41.7	58.3	18.0	22.7	14.5	8.2	10.5	128.4
11478	402790	482133.05	1351291.73	1.5-3.0	5.1	94.9	44.0	51.0	20.6	30.4		
11478	402792	482133.05	1351291.73	3.5-6.0	21.1	78.9	39.0	37.5	16.5	21		
11478	402796	482133.05	1351291.73	3.5-7.5	25.6	74.4	35.0	35.3	16.6	18.7	14.7	116.5
11478	402813	482133.05	1351291.73	7.5-10.0	31.3	68.7	30.0	26.6	14.8	11.8	12.7	122.6
11478	402798	482133.05	1351291.73	10.5-12.0	29.5	70.5	30.0	28.0	16.2	11.8		
11479	403021	482120.19	1350995.94	1.5-3.0	13.7	86.3	48.0	53.5	16.8	36.7		
11479	403022	482120.19	1350995.94	3.5-6.0	46.7	53.3	18.0	21.3	14.1	7.2		
11479	403048	482120.19	1350995.94	3.5-7.5	36.0	64.0	27.0	28.8	14.1	14.7	11.8	123.3
11479	403049	482120.19	1350995.94	7.5-10.5	35.8	64.2	28.0	25.2	14.9	10.3	13	119.5
11480	402768	482448.04	1351297.95	0.5-3.0	13.1	86.9	45.0	49.6	17.8	31.8		
11480	402771	482448.04	1351297.95	3.0-7.5	17.2	82.8	39.0	38.5	15.8	22.7	15.2	113.8
11480	402770	482448.04	1351297.95	5.0-7.5	10.2	89.8	38.0	39.7	18.6	21.1		
11480	402774	482448.04	1351297.95	7.5-12.0	21.2	78.8	30.0	27.2	14.4	12.8	12.5	123.5
11480	402773	482448.04	1351297.95	9.5-12.0	20.4	79.6	35.0	32.0	18	14		
11481	403202	482660.50	1350405.12	3.5-6.0	33.8	66.2	28.0	31.0	15.5	15.5		
11481	403230	482660.50	1350405.12	3.0-7.5	38.2	61.8	28.0	30.7	14.5	16.2	13.4	120.2
11481	403204	482660.50	1350405.12	6.5-9.0	43.9	56.1	23.0	26.6	15.4	11.2		
11481	403231	482660.50	1350405.12	13.5-18.5	29.4	70.6	30.0	24.9	12.8	12.1	12.5	122.2
11470B	403131-1	482790.71	1351042.41	1.5-3.0	55.8	44.2	12.0	19.8	14.3	5.5		
11470B	403132-1	482790.71	1351042.41	3.5-6.0	50.6	49.4	8.0	NP	NP	NP		
11470B	403169-1	482790.71	1351042.41	3.5-7.5	44.1	55.9	10.0	17.7	15.7	2	11.1	125.0
11470B	403137-1	482790.71	1351042.41	8.0-10.5	37.3	62.7	15.0	16.0	15.2	0.8		
11470B	403170-1	482790.71	1351042.41	7.5-12.0	34.0	66.0	12.0	17.3	16.7	0.6	11.4	124.0
G2-120	405124	478800	1351164.79	5.0-7.0	33.3	66.7	34.0	30.7	15.7	15		
G2-121	404812	479000	1351314.11	10-11.7	34.0	66.0	28.0	26.9	15	11.9		
G2-121	404814	479000	1351314.11	12.5-14.5	38.8	61.2	26.0	26.4	14.4	12		

Notes:
1. Data Compiled from Parsons [1994, 1995a, 1995b].
2. North American Datum 1983
3. ASTM D 422
4. ASTM D 4318 (LL = liquid limit; PL = plastic limit; and PI = plasticity index).
5. ASTM D 698

000032

265

TABLE 3-2 (continued)

Boring Number	Sample Number	Borehole Northing[2]	Borehole Easting[2]	Sample Depth	Particle Size[3]			Atterberg Limits[4]			Standard Proctor Compaction[5]	
					Percentage Coarser than No. 200 Sieve	Percentage Passing No. 200 Sieve	Percentage Smaller than 0.005 mm	LL	PL	PI	Optimum Moisture Content (%)	Maximum Dry Density (pcf)
G2-122	404821	479000	1350915.67	5.0-7.0	3.4	96.6	37.0	30.7	17.2	13.5		
G2-122	404824	479000	1350915.67	10.0-12.0	30.0	70.0	33.0	28.6	14.9	13.7		
G2-123	404797	480000	1351312.37	7.5-9.5	33.6	66.4	29.0	26.6	15.2	11.4		
G2-123	404800	480000	1351312.37	12.5-14.5	31.7	68.3	31.0	28.0	14.4	13.6		
G2-124	405002	480000	1350695.40	5.0-7.0	3.8	96.2	47.0	56.3	18.9	37.4		
G2-124	405004	480000	1350695.40	10.0-12.0	13.8	86.2	43.0	41.6	18.8	22.8		
G2-125	405023	480600	1350663	2.5-4.5	9.0	91.0	36.0	37.5	18.8	18.7	18.2	111.6
G2-125	405026	480600	1350663	7.5-9.5	34.4	65.6	24.0	22.4	13.9	8.5		
G2-125	405029	480600	1350663	12.5-14.5	39.5	60.5	18.0	16.3	12.4	3.9		
G2-126	404768	481300	1351533.64	7.5-9.5	32.6	67.4	24.0	22.6	14.7	7.9		
G2-126	404771	481300	1351533.64	12.5-14.5	35.9	64.1	25.0	23.8	13.7	10.1	11.3	125.0
G2-127	404751	481300	1351293.21	7.5-9.5	24.7	75.3	33.0	28.3	14.8	13.5		
G2-128	405040	481200	1350644.79	2.5-4.5	20.0	80.0	42.0	39.4	17.3	22.1		
G2-128	405043	481400	1350644.79	7.5-9.5	41.4	58.6	28.0	27.8	15.5	12.3	12.6	123.0
G2-128	405046	481400	1350644.79	12.5-14.5	51.3	48.7	22.0	28.3	15.5	12.8		
G2-129	404729	482000	1351546.03	5.0-7.5	1.5	98.5	40.0	32.9	18.6	14.3		
G2-129	404732	482000	1351546.03	10.0-12.5	40.7	59.3	24.0	24.3	14.9	9.4		
G2-130	405075	482000	1350648.72	5.0-7.0	27.5	72.5	25.0	23.8	13.7	10.1		
G2-130	405077	482000	1350648.72	10.0-12.0	23.1	76.9	30.0	25.2	14.1	11.1		
G2-131	404704	482800	1351543.57	7.5-9.5	29.8	70.2	34.0	27.1	15.1	12		
G2-132	405102	483000	1350414.49	5.0-7.0	7.1	92.9	46.0	48.2	20.6	27.6	14.5	118.0
G2-132	405105	483000	1350414.49	10.0-12.0	25.2	74.8	27.0	25.1	14.8	10.3		
G2-133	405053	482600	1349813.50	2.5-4.5	2.2	97.8	41.0	47.3	16.8	30.5	15.8	98.5
G2-133	405055	482500	1349813.50	7.5-9.5	31.8	68.2	25.0	26.9	15.3	11.6		
G2-134	405140	478,800	1351504.25	12.0-14.0	38.4	61.6	23.0	24.6	13.5	11.1		
G2-201	2	478479.25	1350255.01	2.5-4.5	3.0	97.0	48.8	49.0	18	31		
G2-201	4	478479.25	1350255.01	7.5-9.5	12.0	88.0	42.0	30.0	17	13		
G2-202	1	478676.08	1350881.05	0.0-2.0								
G2-202	3	478676.08	1350881.05	5.0-7.0	39.0	61.0	18.0	20.0	14	6		
G2-202	4	478676.08	1350881.05	7.5-9.5	35.0	65.0	27.0	27.0	15	12		
G2-202	5	478676.08	1350881.05	10.0-12.0	31.0	69.0	27.0	25.0	14	11		
G2-203	5	478264.29	1350667.59	10.0-12.0	59.0	41.0	15.0	21.0	13	8		
G2-204	1	478463.15	1351295.60	0.0-2.0								
G2-204	4	478463.15	1351295.60	7.5-9.5	32.0	68.0	29.0	27.0	15	12		
G2-204	6	478463.15	1351295.60	12.5-14.5	29.0	71.0	27.0	24.0	14	10		
G2-205	2	477852.36	1350454.88	2.5-4.5	13.0	87.0	36.0	41.0	23	18		
G2-205	3	477852.36	1350454.88	5:0-7.0	N.A.	N.A.	N.A.	N.A.	N.A.	N.A.		
G2-205	5	477852.36	1350454.88	10.0-12.0	35.0	65.0	27.0	28.0	16	12		
G2-206	1	478048.67	1351081.50	0.0-2.0								
G2-206	2	478048.67	1351081.50	2.5-4.5	24.0	76.0	35.0	35.0	17	18		

Notes:
1. Data Compiled from Parsons [1994, 1995a, 1995b].
2. North American Datum 1983
3. ASTM D 422
4. ASTM D 4318 (LL = liquid limit; PL = plastic limit; and PI = plasticity index).
5. ASTM D 698

000033

265

TABLE 3-2 (continued)

Boring Number	Sample Number	Borehole Northing[2]	Borehole Easting[2]	Sample Depth	Particle Size[3]			Atterberg Limits[4]			Standard Proctor Compaction[5]	
					Percentage Coarser than No. 200 Sieve	Percentage Passing No. 200 Sieve	Percentage Smaller than 0.005 mm	LL	PL	PI	Optimum Moisture Content (%)	Maximum Dry Density (pcf)
G2-206	3	478048.67	1351081.50	5.0-7.0	28.0	72.0	37.0	N.A.	N.A.	N.A.		
G2-206	4	478048.67	1351081.50	7.5-9.5	32.0	68.0	30.0	28.0	15	13		
G2-206	5	478048.67	1351081.50	10.0-12.0	36.0	64.0	26.0	26.0	15	11		
G2-206	6	478048.67	1351081.50	12.4-14.5	N.A.	N.A.	N.A.	N.A.	N.A.	N.A.		
G2-207	1	477646.51	1350879.51	0.0-2.0								
G2-207	5	477646.51	1350879.51	10.0-12.0	33.0	67.0	27.0	26.0	16	10		
G2-208	2	477838.17	1351493.02	2.5-4.5	2.0	98.0	35.0	44.0	20	24		
G2-208	3	477838.17	1351493.02	5.0-7.0	30.0	70.0	31.0	40.0	17	23		
G2-208	4	477838.17	1351493.02	7.5-9.5	31.0	69.0	27.0	31.0	15	16		
G2-208	5	477838.17	1351493.02	10.0-12.0	N.A.	N.A.	N.A.	N.A.	N.A.	N.A.		
G2-209	BULK	478155.04	1351394.37	0.0-25.0	30.0	70.0	30.0	28.0	13	15		
G2-210	BULK	478161.69	1350355.36	0.0-25.0	25.0	75.0	31.0	28.0	14	14		
G2-SB-1	404608	479000	1351423.85	1.5-5.0	7.9	92.1	42.0	48.9	18.6	30.3	17.5	104.8
G2-SB-10	404637	482500	1351425.69	1.5-5.0	15.4	84.6	42.0	46.5	17.2	29.3	17.1	109.9
G2-SB-11	404642	482500	1350774.40	1.5-5.0	22.4	77.6	30.0	29.1	16.3	12.8	14.3	119.0
G2-SB-12	404599	482800	1351118.36	1.5-4.2	10.8	89.2	47.0	50.4	19.1	31.3	18.1	106.1
G2-SB-13	404583	482700	1350113.43	1.5-5.0	13.4	86.6	42.0	46.0	17.2	28.8	16.6	112.1
G2-SB-14	404578	482600	1350142.05	1.5-5.0	11.7	88.3	44.0	51.5	18.2	33.3	18.7	107.1
G2-SB-15	404649	479600	1347147.30	1.0-2.0							21.4	101.0
G2-SB-16	404650	480000	1347691.12	1.0-2.0							20.9	103.9
G2-SB-17	405366	480900	1348112.13	1.0-2.0							19.3	109.1
G2-SB-2	404603	478900	1350798.64	1.5-5.0	7.8	92.2	38.0	41.0	18.1	22.9	17	107.5
G2-SB-2,3,4,6	404617	479850		0.0-1.5							17.7	105.6
G2-SB-3	404591	479500	1351115.51	1.5-5.0	4.4	95.6	38.0	46.1	17.6	28.5	17.8	105.8
G2-SB-4	404615	479850	1351428.92	1.5-5.0	15.8	84.2	40.0	47.6	17.8	29.8	17.2	107.5
G2-SB-5	404627	479850	1350780.18	1.5-5.0	10.1	89.9	42.0	49.7	18.8	30.9	18.2	106.8
G2-SB-6	404595	480600	1351101.05	1.5-5.0	6.8	93.2	32.0	36.5	19.6	16.9	17.3	106.3
G2-SB-7	404632	481400	1351404.44	1.5-5.0	12.0	88.0	41.0	45.1	17.6	27.5	18.5	109.6
G2-SB-8	404621	481400	1350742.84	1.5-5.0	9.7	90.3	40.0	42.0	17.1	24.9	17.5	109.7
G2-SB-8,9,10,11	404644	482500		0.0-1.5							19.3	105.3
G2-SB-9	404587	481900	1351110.22	1.5-5.0	8.5	91.5	42.0	48.4	18.6	29.8	19.2	107.2
				Number of Data Points	128	128	128	124	124	124	51	51
				Average	29.8	74.1	31.2	32.8	16.1	16.7	15.9	113.1
				Std. Dev. σ	23.0	14.2	9.7	10.2	2.1	8.7	3.0	8.2

Notes:
1. Data Compiled from Parsons [1994, 1995a, 1995b].
2. North American Datum 1983
3. ASTM D 422
4. ASTM D 4318 (LL = liquid limit; PL = plastic limit; and PI = plasticity index).
5. ASTM D 698

000034

265

3.4 Analysis of Existing Geotechnical Data

Examination of the data in Table 3-2 reveals that the brown till will meet material property criteria presented in Section 3.2, with two exceptions. The first exception is the requirement that at least 25 percent of the particles, by weight, must have a maximum dimension not greater than 0.002 mm. The second exception, which occurs in only a very few cases, is the requirement that at least 50 percent of the particles by weight, must pass through a U.S. No. 200 standard sieve. Alternative requirements will be proposed for these index properties in accordance with OAC 3745-27-08(C). As explained in the 13 December 1995 DOE document entitled "*Alternative to OAC Prescriptive Specifications for Compacted Soil Liners*" (presented in Appendix A of this document), an alternative is proposed for the first requirement wherein the average fraction of clay-size particles of the brown till need only exceed 15 percent. Verification of the suitability of the brown till, and hence, the proposed alternative requirement, will be provided by the results of the test pad program. A similar type of modification to the U.S. No. 200 standard sieve requirement will be proposed with the results of the test pad program.

An analysis of the data summarized in Table 3-2 was performed to evaluate the trends of variability of material characteristics with respect to boring location and sample depth. Compaction and index characteristics that may affect hydraulic conductivity were investigated because a change in these characteristics would indicate the need to delineate separate clay sources for the test pad program and potentially for construction of the OSDF compacted clay liner and cap components. These characteristics include:

- percent of particles smaller than 0.005 mm (percent clay);
- percent of particles passing the U.S. No. 200 standard sieve;
- plasticity index (PI); and
- optimum moisture content (OMC) and maximum dry density from the standard Proctor compaction test (ASTM D 698).

The analysis of the data in Table 3-2 reveals that the percentage of particles smaller than 0.005 mm decreases with increasing depth; the percentage of particles passing the No. 200 sieve decreases with increasing depth; the plasticity index (PI) decreases with increasing depth; and the standard Proctor optimum moisture content decreases while the maximum dry density increases with increasing depth. Inspection of the grain size distribution curves for the brown till indicates that these variations in material properties correlate to the amount of sand in the till, which increases with increasing depth. The trend of increasing sand content is gradual and not indicative of a distinct stratigraphic unconformity in the brown till. However, this trend is expected to affect the compaction characteristics of the brown till and therefore will likely cause a shift in the APZ. This phenomenon is consistent with that described by Othman and Luettich [1994]. In an effort to evaluate whether a shift in APZ is significant, the brown till is delineated into two horizons, as follows:

- the upper horizon is defined as the brown till (excluding topsoil) extending from the ground surface to a depth of 5 ft (1.5 m); and

- the lower horizon is defined as the brown till located below a depth of 5 ft (1.5 m).

In order to evaluate whether the compaction and index properties of the brown till vary consistently with respect to lateral location, the data from Table 3-2 was grouped according to horizon and graphed with respect to the northing coordinate of the boring. The northing coordinate is used as the indicator of sample (lateral) location since the OSDF area and on-site borrow area are relatively long in the north-south direction but narrow in the east-west direction (see Figure 2-1). The data was then plotted on the following graphs:

- Figure 3-2 shows the percentage of particles smaller than 0.005 mm as a function of northing coordinate;

- Figure 3-3 shows the percentage of particles passing the No. 200 sieve as a function of northing coordinate;

- Figure 3-4 shows the PI as a function of northing coordinate;

- Figure 3-5 shows the standard Proctor optimum moisture content as a function of northing coordinate; and

- Figure 3-6 shows the standard Proctor maximum dry density as a function of northing coordinate.

Visual inspection of the data shown in Figures 3-2 through 3-6 reveals no apparent trends relative to the sample northing coordinate. Visual examination of these figures also reveals that the material properties of the brown till from the OSDF area are not significantly different than the material properties of the brown till from the borrow area. Figures 3-2 through 3-6 clearly demonstrate the differences in soil properties and characteristics between the two brown till horizons. For each property or characteristic of interest, the upper horizon clearly has a different average value than the lower horizon. The average value and standard deviation of each property or characteristic for each horizon is summarized in Table 3-3. In general, the upper horizon is more plastic, has a higher percentage of fines, has a higher standard Proctor OMC, and a lower standard Proctor maximum dry density than the lower horizon.

3.5 Findings

Based on the analyses presented in the section of this TPWP, it is found that:

- with the exception of percentage of clay-size particles, both horizons of the brown till meet the material property criteria of the OU2 ARARs;

- within each horizon, there are not significant differences in material properties between the OSDF area and the borrow area; and

- two test pads should be constructed (one using upper horizon brown till, and one using lower horizon brown till) to evaluate whether the trend of increasing sand content with increasing depth results in significantly different compaction requirements for the brown clay from the OSDF area and borrow area.

TABLE 3-3

Statistical Comparison of Brown Till Geotechnical Properties
FEMP On-Site Disposal Facility

Geotechnical Property	Brown Till Population		Upper Horizon Brown Till		Lower Horizon Brown Till	
	Average	Std. Dev.	Average	Std. Dev.	Average	Std. Dev.
Percentage Smaller Than 0.005 mm	31.9	9.0	36.9	8.5	29.3	8.0
Percentage Passing No. 200 Sieve	75.1	13.9	83.9	12.3	70.4	12.3
Plasticity Index (PI)	17.4	8.2	23.7	7.7	14.0	6.2
Standard Proctor Optimum Moisture Content (%)	15.4	2.9	17.7	1.4	13.5	2.2
Standard Proctor Maximum Dry Density (pcf)	114.5	7.9	107.6	4.2	119.9	5.6

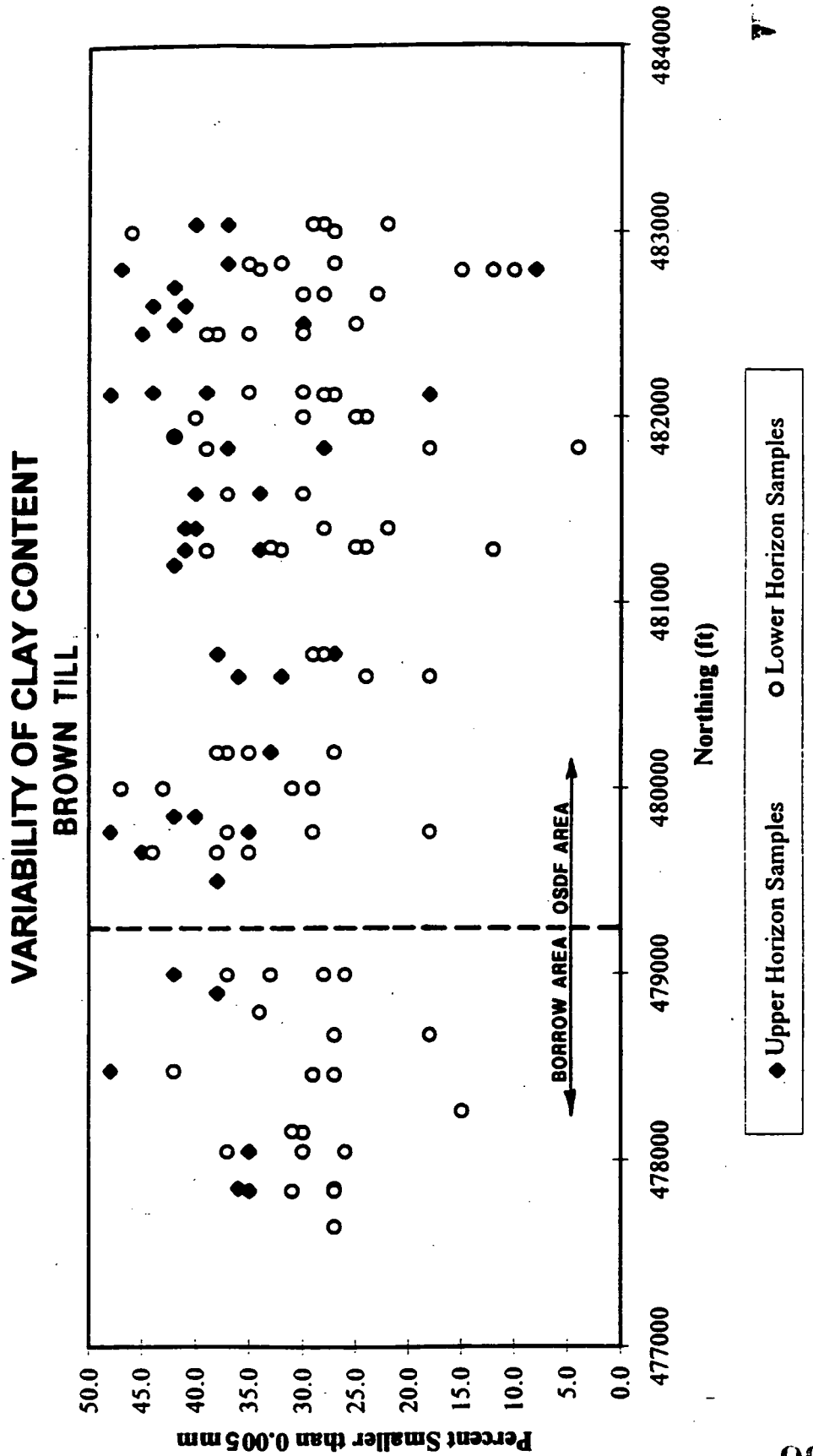

GEOSYNTEC CONSULTANTS
ATLANTA, GEORGIA

FIGURE NO.	3-2
PROJECT NO.	GE3900-4.1
DOCUMENT NO.	F9530008
FILE NO.	DF

VARIABILITY OF FINES CONTENT
BROWN TILL

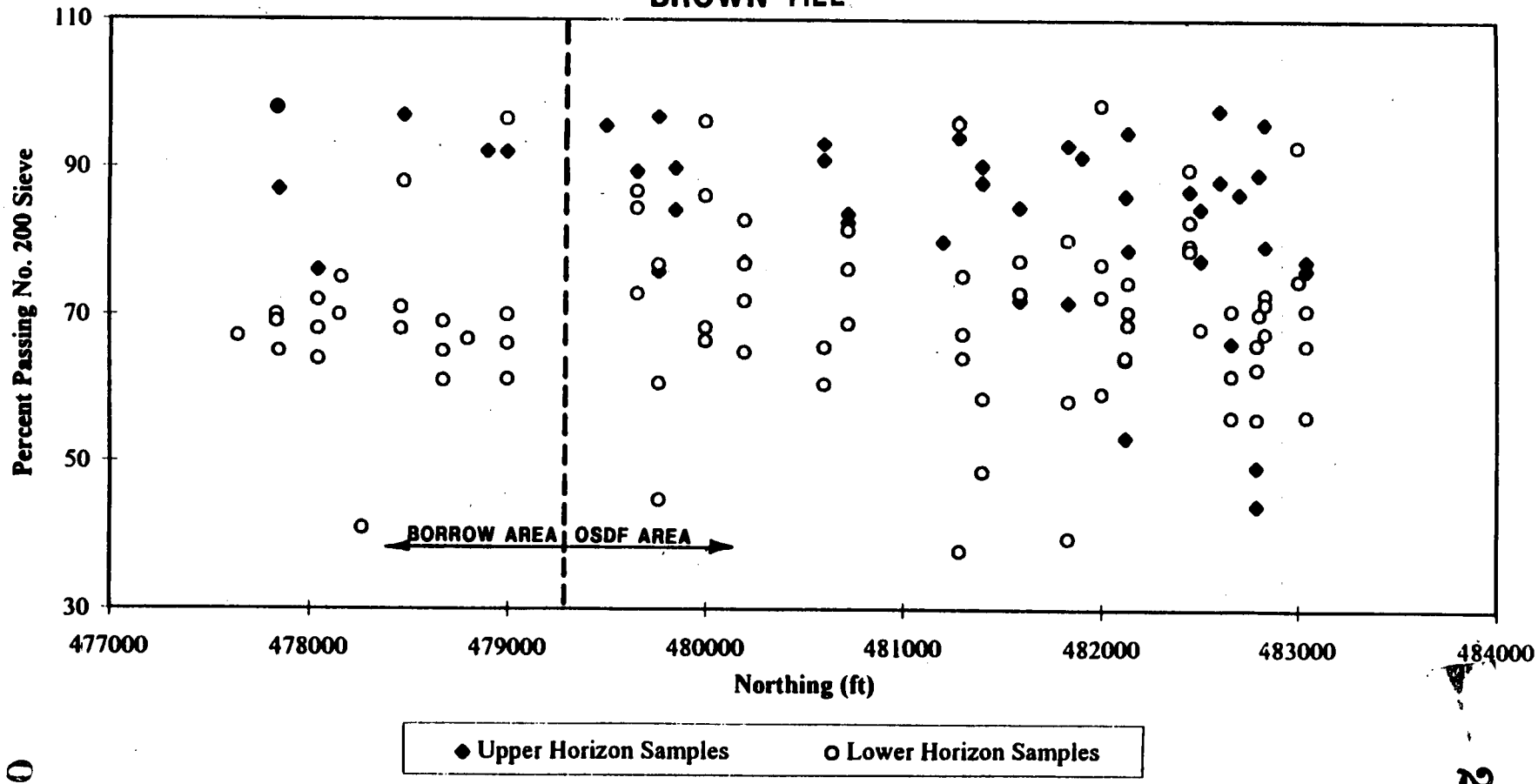

GEOSYNTEC CONSULTANTS
ATLANTA, GEORGIA

FIGURE NO.	3-3
PROJECT NO.	GE3900-4.1
DOCUMENT NO.	F9530008
FILE NO.	DF

000041

265

VARIABILITY OF PLASTICITY INDEX
BROWN TILL

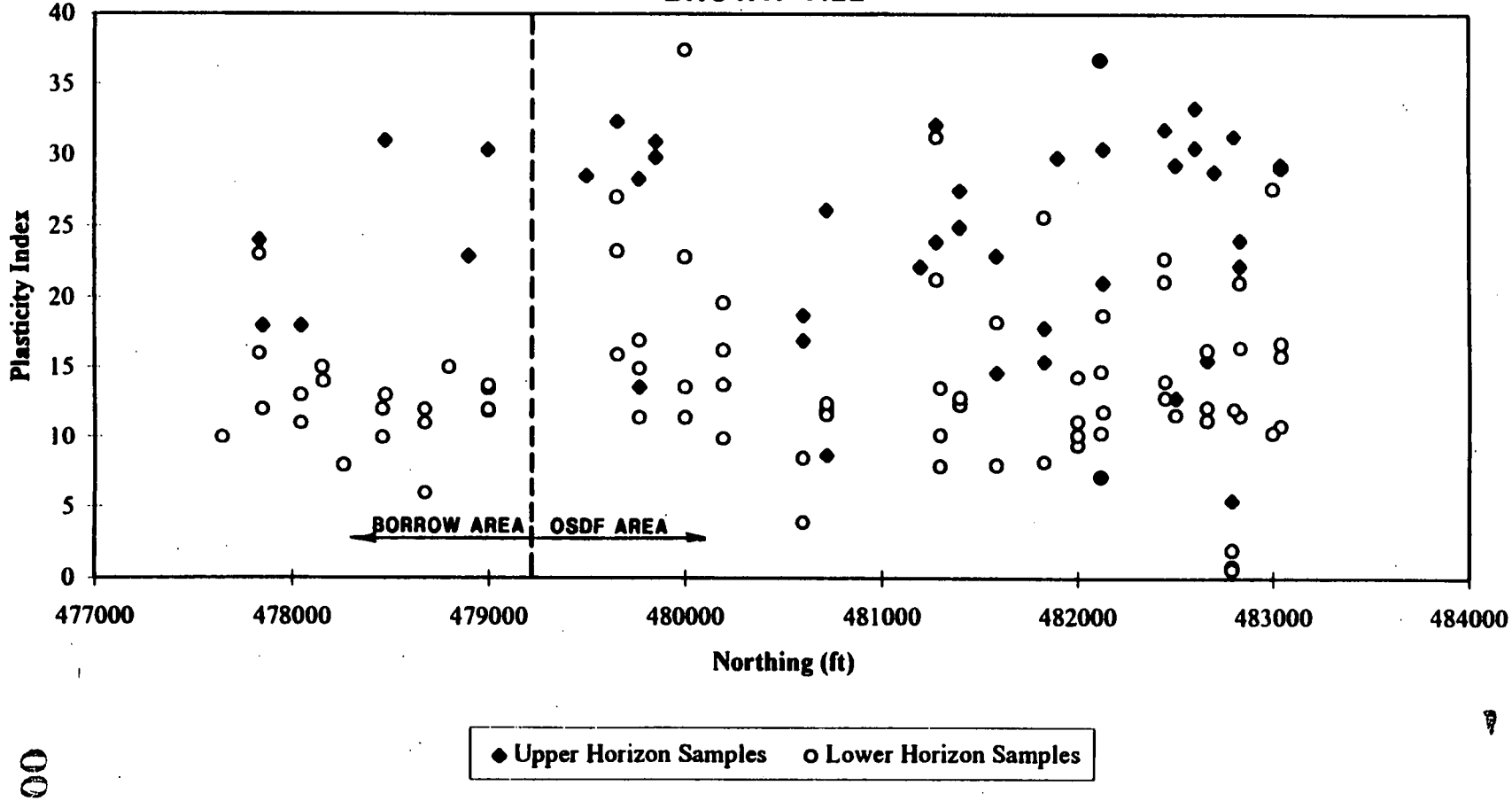

GEOSYNTEC CONSULTANTS
ATLANTA, GEORGIA

FIGURE NO.	3-4
PROJECT NO.	GE3900-4.1
DOCUMENT NO.	F9530008
FILE NO.	DF

000042

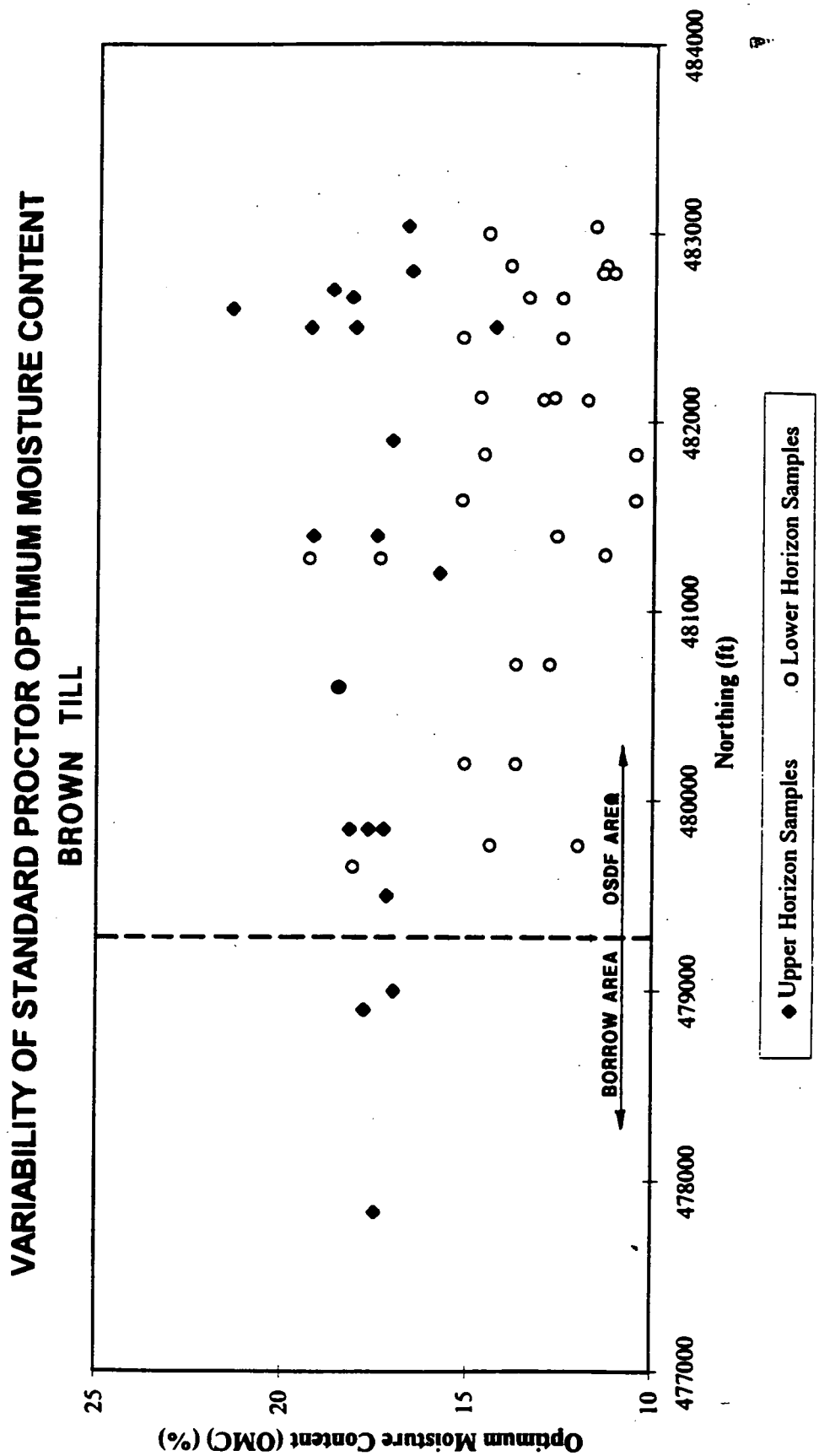

GEOSYNTEC CONSULTANTS
ATLANTA, GEORGIA

FIGURE NO.	3-5
PROJECT NO.	GE3900-4.1
DOCUMENT NO.	F9530008
FILE NO.	DF

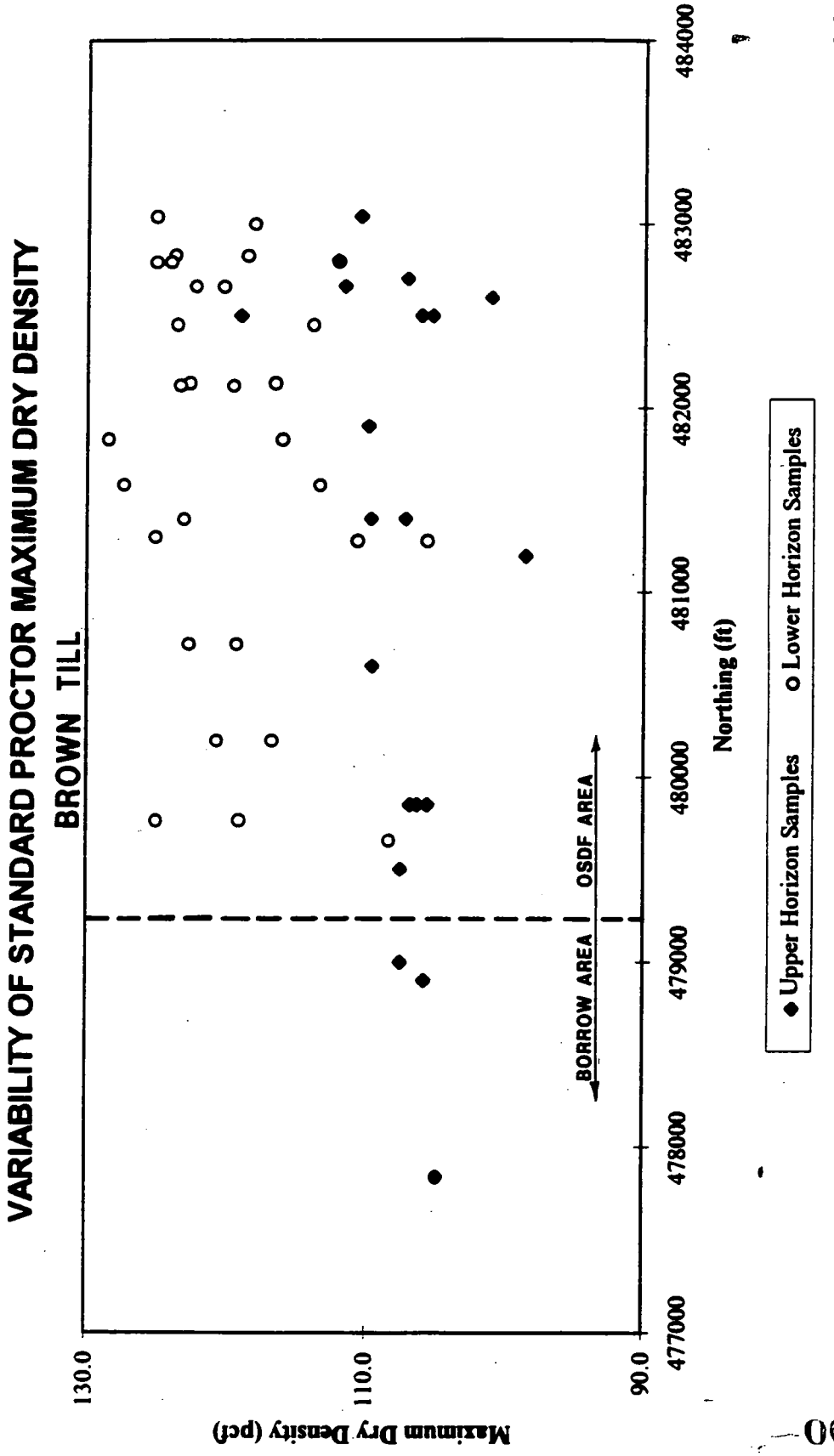

GEOSYNTEC CONSULTANTS
ATLANTA, GEORGIA

FIGURE NO.	3-6
PROJECT NO.	GE3900-4.1
DOCUMENT NO.	F9530008
FILE NO.	DF

4. PRE-CONSTRUCTION LABORATORY TESTING PROGRAM

4.1 Introduction

The pre-construction laboratory testing program is intended to: (i) establish APZs for the upper and lower horizon till materials; and (ii) select the range of target compaction conditions that will be evaluated during the test pad program. Pre-construction testing is used to evaluate soil index properties, compaction characteristics, and hydraulic conductivity characteristics. The program was formulated following the general guidelines provided by Daniel [1990]. The program includes three phases of work: (i) sampling and laboratory testing; (ii) defining the APZ; and (iii) selecting compaction conditions for the test pads. Data quality objectives (DQOs) for the pre-construction laboratory testing program are presented in Appendix F of this TPWP.

4.2 Sampling and Laboratory Testing

As part of the program, two bulk samples of each brown till horizon will be obtained from the proposed test pad borrow excavation shown in Figure 4-1. Each sample will consist of approximately 75 lbs (34 kg) of soil taken from the mid-elevation of the horizon. Samples will be placed in 5-gal (19-l) plastic buckets which will be sealed with tape. In addition to the bulk samples, natural moisture content samples will be obtained at 1-ft (0.3-m) vertical intervals throughout each horizon. Each natural moisture content sample will consist of approximately 2 lbs (900 g) of soil placed in sealed air-tight glass sample jars. All samples will be carefully packaged and shipped via courier to GeoSyntec's geotechnical laboratory in Atlanta, Georgia, for index, compaction, and permeability testing as summarized in Table 4-1 and described below.

Index testing (i.e., particle-size distribution, Atterberg limits, soil classification, and moisture content tests) will be conducted on each bulk sample and on a composite sample formed by blending the two individual samples from each horizon. The purpose of the index tests is to verify that the source of upper horizon brown till and lower horizon brown till to be used in constructing the test pads meets the material-property

TABLE 4-1

Summary of Pre-Construction Laboratory Tests for Test Pad Program FEMP On-Site Disposal Facility

Sample No.	Particle-Size Distribution (ASTM D 422)	Atterberg Limits (ASTM D 4318)	Moisture Content (ASTM D 2216)	Soil Classification (ASTM D 2487)	Standard Proctor (ASTM D 698)	Modified Proctor (ASTM D 1557)	Hydraulic Conductivity (ASTM D 5084)
Upper Horizon Sample No. UH1	1	1	3	1	1	0	0
Upper Horizon Sample No. UH2	1	1	3	1	1	0	0
Composite Sample No. UH3	1	1	3	1	1	1	10
Lower Horizon Sample No. LH1	1	1	3	1	1	0	0
Lower Horizon Sample No. LH2	1	1	3	1	1	0	0
Composite Sample No. LH3	1	1	3	1	1	1	10

Note: Particle-size distribution test results will report fraction of particles finer than 0.002 mm.

criteria set forth by the ARARs and to ensure general consistency of index properties with previous geotechnical test results on the brown till (i.e., Figures 3-2 through 3-6).

Standard Proctor compaction testing (i.e., ASTM D 698) will be conducted on each bulk sample and on the composite bulk sample from each horizon. The purpose of the compaction tests is to establish the compaction characteristics of each soil as well as the consistency of the compaction characteristics between sample locations. One modified Proctor compaction test (i.e., ASTM D 1557) will be performed on the composite bulk sample from each horizon to assist in defining the APZ. The purpose of the modified Proctor test is to establish the line of optimums for the upper and lower horizon brown tills. The reasons for establishing the line of optimum are two-fold: (i) to assist in establishing contours of degree of saturation and hydraulic conductivity because these contours are usually more or less parallel to the line of optimums; and (ii) the line of optimums is useful in establishing effective construction quality assurance (CQA) procedures for soil liners since research and experience has shown that the larger the faction of compaction points (i.e., combinations of compaction moisture content and dry density) of a clay liner or cap falling above the line of optimums, the better the overall quality of construction. (See page 51 of EPA/600/R-93/182 "*Technical Guidance Document - Quality Assurance and Quality Control for Waste Containment Facilities*".)

Permeability testing will be conducted on specimens of remolded soil obtained from the composite bulk samples. The laboratory hydraulic conductivity tests will be performed in accordance with ASTM D 5084 "*Standard Test Method for Measurement of Hydraulic Conductivity of Saturated Porous Materials Using a Flexible Wall Permeameter*". This ASTM standard is presented in Appendix B of this TPWP. The geotechnical laboratory will form remolded specimens to target moisture/density points and conduct the permeability testing; it is anticipated that ten target moisture/density points will be used to establish an APZ for each till horizon. Each specimen will be tested at three effective confining stresses, 2 psi (13.8 kPa), 5 psi (34.5 kPa), and 10 psi (68.9 kPa). The specimens will be tested at a hydraulic gradient not exceeding 30 and using tap water as the permeant.

4.3 Laboratory Acceptable Permeability Zone

Results of the hydraulic conductivity tests on the remolded samples from each horizon will be superimposed on a graph of dry density versus moisture content to establish contours of equal hydraulic conductivity and the limits of the APZ. The APZ concept was illustrated in Figure 2-2 of this TPWP. It is anticipated that boundaries of each APZ will be as follows:

- the left boundary will be the standard Proctor OMC;
- the right boundary will be the moisture content at a specified number of percentage points wet of the standard Proctor OMC based on clay shear strength and workability considerations; and
- the lower boundary will be defined by two requirements:
  - a specified degree of saturation determined to correspond to the maximum allowable contour of hydraulic conductivity (1×10^{-7} cm/s); and
  - the dry density at 95 percent of the standard Proctor maximum dry density.

4.4 Selection of Target Compaction Conditions

The APZs will be used to establish target compaction conditions for construction of each test pad. A target moisture content range will be established for each test pad and a target minimum dry density will be established for each lane. As previously described in Section 2.3.3 of the TPWP, each test pad will consist of three lanes with target compaction conditions as summarized below.

- Lane 1 will have target conditions selected to fall within the "lower" portion of the APZ.

- Lane 2 will have target compaction conditions selected to fall within the "midrange" portion of the APZ.

- Lane 3 will have target compaction conditions selected to fall within "upper" portion of the APZ.

The target compaction condition concept, as described above, was illustrated in Figure 2-3.

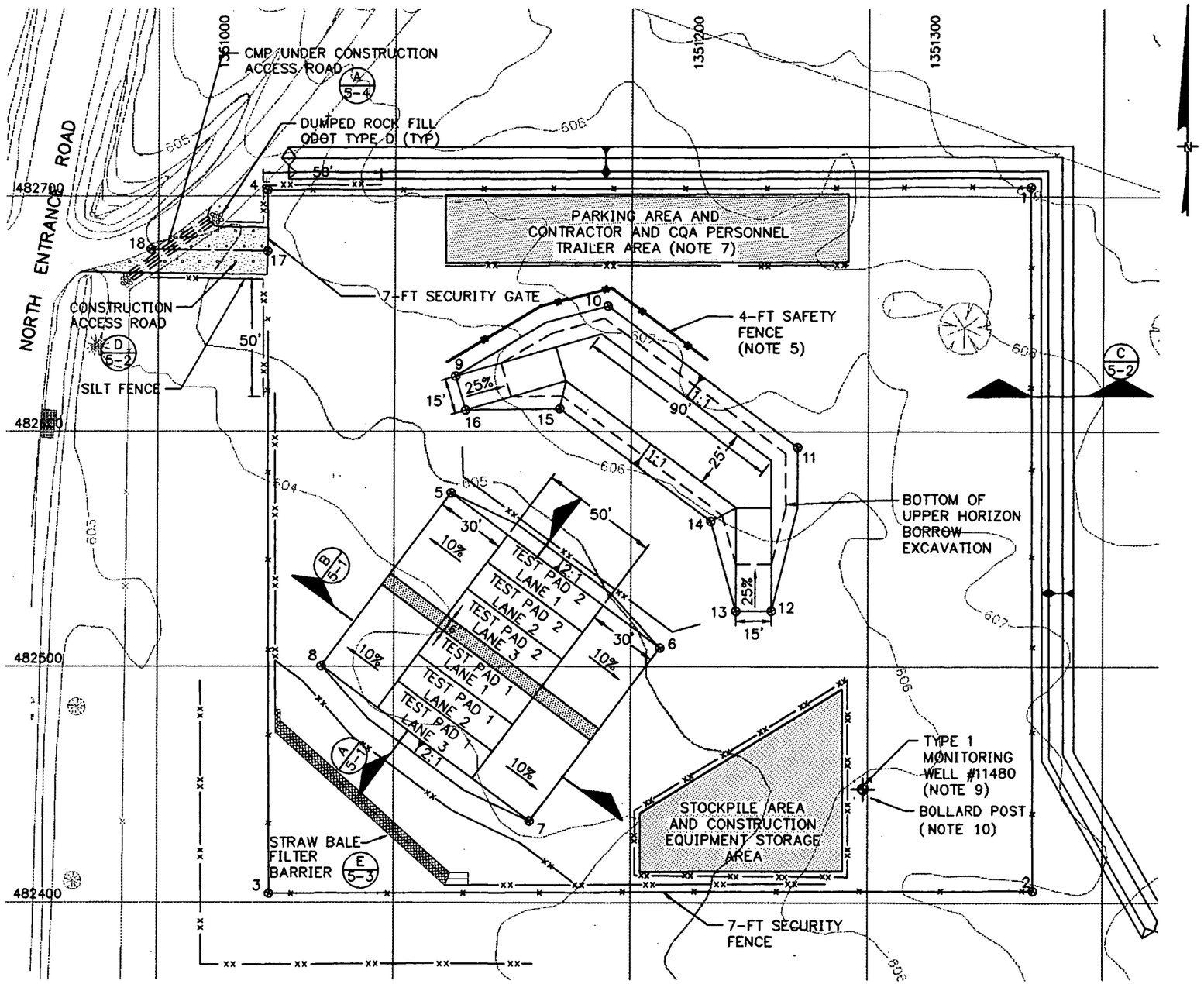

NOTES:

1. TOPOGRAPHIC BASE MAP TAKEN FROM FIGURE 2-1.
2. EXCAVATED MATERIAL FROM RUNON DIVERSION DITCH SHALL BE STOCKPILED ADJACENT TO THE DITCH. THE DITCH SHALL BE BACKFILLED WITH THIS MATERIAL AS PART OF THE TEST PAD DECOMMISSIONING PROGRAM.
3. TEST PAD 1 SHALL BE CONSTRUCTED OF UPPER HORIZON BROWN TILL (i.e. THE UPPER 5 FT OF BROWN TILL). TEST PAD 2 SHALL BE CONSTRUCTED OF LOWER HORIZON BROWN TILL (i.e. FROM 5 TO 11 FT DEPTH). EXCESS UPPER HORIZON BROWN TILL REMOVED TO PROVIDE ACCESS TO LOWER HORIZON BROWN TILL SHALL BE USED FOR THE ACCESS RAMPS TO THE TEST PADS OR STOCKPILED.
4. CHAIN-LINK FENCE SHALL MEET THE REQUIREMENTS OF AASHTO DESIGNATION M181. THE FENCE FABRIC SHALL BE TYPE I, WITH A 2 INCH MESH AND 0.120 INCH WIRE. THE FENCE FABRIC SHALL BE 84 INCHES HIGH. GRADE 1 STEEL SHALL BE USED FOR ALL POSTS AND GATES. ALL POSTS SHALL BE SET PLUMB NOT FURTHER THAN 10 FEET ON CENTER AND ENCASED FOR A DEPTH OF 32 INCHES IN A CONCRETE FOOTING WHICH HAS A DEPTH NOT LESS THAN 36 INCHES BELOW THE GROUND SURFACE. THE FOOTINGS SHALL BE 9 INCHES IN DIAMETER FOR TERMINAL, PULL OR CORNER POSTS.
5. 4-FT HIGH SAFETY FENCE SHALL BE INSTALLED BETWEEN THE BORROW EXCAVATION AND THE PARKING AREA AND TEST PAD CONTRACTOR AND CQA TRAILER AREA. SAFETY FENCE SHALL BE SECURELY STAKED AND BE OF HIGHLY VISIBLE MATERIAL.
6. MATERIAL REQUIREMENTS FOR SILT FENCE AND OTHER ITEMS ARE GIVEN IN THE CONSTRUCTION SPECIFICATIONS.
7. THE PARKING AREA AND CONTRACTOR AND CQA TRAILER AREA SHOWN ON THIS FIGURE MAY BE RELOCATED AT THE DISCRETION OF THE CONSTRUCTION CONTRACTS MANAGER.
8. THE TOP 6 INCHES OF TOPSOIL, IN DISTURBED AREAS, SHALL BE REMOVED, MANAGED AS IMPACTED MATERIAL, AND STOCKPILED AT A LOCATION SPECIFIED BY THE CONSTRUCTION CONTRACTS MANAGER.
9. CONTRACTOR SHALL BE RESPONSIBLE FOR PROTECTION OF TYPE I MONITORING WELL DURING ALL TEST PAD PROGRAM ACTIVITIES. COORDINATES OF WELL 11480 ARE N482448.04, E1351297.95. CONTRACTOR SHALL REPAIR ANY DAMAGE TO WELL AT HIS OWN EXPENSE.
10. FOUR BOLLARD POSTS SHALL BE CONSTRUCTED RADIALLY 90° APART WITH A 3-FOOT RADIUS FROM MONITORING WELL NUMBER 11480. BOLLARD POSTS SHALL BE CONSTRUCTED OF 8 INCH DIAMETER SCHEDULE 40 STEEL PIPE BACKFILLED WITH CONCRETE AND BE SET PLUMB AND ENCASED 36 INCHES INTO A 42 INCH DEEP CONCRETE FOUNDATION WITH A 24 INCH DIAMETER.

CONTROL POINTS		
POINT	NORTHING	EASTING
1	482703.8	1351369.0
2	482404.7	1351370.3
3	482403.7	1351047.2
4	482702.7	1351045.9
5	482573.9	1351124.0
6	482508.0	1351212.2
7	482434.5	1351157.2
8	482500.3	1351069.1
9	482623.5	1351125.7

CONTROL POINTS		
POINT	NORTHING	EASTING
10	482653.4	1351189.8
11	482593.4	1351270.2
12	482523.7	1351259.3
13	482523.7	1351244.3
14	482561.9	1351233.6
15	482609.8	1351169.5
16	482609.2	1351129.9
17	482676.7	1351045.9
18	482677.4	1350996.7

0 50 SCALE IN FEET

000050

GEOSYNTEC CONSULTANTS
ATLANTA, GA

PROJECT NO.	GE3900-4.1	FIGURE NO.	4-1
DOCUMENT NO.	F9530008	FILE NO.	3900B016.DWG

5. TEST PAD DESIGN

5.1 Test Pad Layout

Test pad design criteria include OU2 ARARs for test pad layout and construction (Table 5-1). The layout of the test pads is influenced by the following requirements (OAC 3745-27-08(C)(1)(m)):

- the test pad shall have a minimum width three times the width of the compaction equipment and a minimum length two times the length of the compaction equipment;
- the test pad shall be comprised of at least four lifts; and
- the test pad shall be designed such that the proposed tests are appropriate and their results valid.

The test pad geometry is illustrated in Figures 4-1 and 5-1. This layout satisfies the requirements presented above. Each test pad is 42.9 ft (13.1 m) wide to allow for construction of three separate lanes, all with similar moisture contents (although with slight moisture variations between lanes likely due to the limitations of construction), but each with a different compactive effort (as illustrated in Figure 2-3). The lane width is slightly larger than the "two pass" width of a Caterpillar 815 compactor, 14.3 ft (4.4 m). The total test pad width is four times the width of a Caterpillar 815 compactor. The length of the top of each test pad is 50 ft (15.2 m) which is twice the length of the compactor. The end slopes and side slopes of the test pad are designed to allow the equipment to achieve speeds comparable to those achieved during actual construction and to provide full coverage during compaction. The test pads will consist of six lifts with a total thickness of 3 ft (0.9 m).

Note that the test pads will contain six lifts rather than the minimum number of lifts allowed by the ARARs (i.e., four lifts). The rationale for proposing six lifts is described in Section 2.3.3 of this TPWP. Each lift will be placed with an 8 in. (200 mm) loose lift thickness. This loose lift thickness will result in a compacted lift thickness of approximately 6 in. (150 mm).

TABLE 5-1

Applicable or Relevant and Appropriate Requirements (ARARs) for Test Pad Program [DOE, 1995c] FEMP On-Site Disposal Facility

CITATION	REQUIREMENT
	Test Pads
Ohio Solid Waste Disposal Regulations OAC 3745-27-08 (C)(1)(m)	The recompacted soil liner and the recompacted soil barrier layer in the cap system shall be modeled by the construction of test pads. The test pads shall: • be designed such that the proposed tests are appropriate and their results are valid. • be constructed to establish the construction details which are necessary to obtain sufficient compaction to satisfy the permeability requirement. The construction details include: - lift thickness; - water content necessary to achieve the desired compaction; and - type, weight, and number of passes of construction equipment. • be constructed prior to the construction of the sanitary landfill component which the test pad will model. • be constructed whenever there is a significant change in soil material properties. • have a minimum width three times the width of the compaction equipment, and a minimum length two times the length of compaction equipment, including power equipment and any attachments. • be comprised of at least four lifts. • be tested for field permeability, following the completion of test pad construction. For each lift a minimum of 3 tests for moisture content and density shall be performed. • be reconstructed as many times as necessary to meet the permeability requirement. Any amended construction details shall be noted. An alternative to test pads may be used if it is demonstrated to the satisfaction of the Director that the alternative meets the requirements.

Note: In this TPWP the following terminology is used: compacted clay liner = recompacted soil liner in Ohio Solid Waste Disposal Regulations; and compacted clay cap = cap system recompacted soil barrier layer of the Ohio regulations.

5.2 Erosion Control and Stormwater Management

The layout of the test pad construction site is designed to accommodate the test pads, provide a borrow excavation with sufficient volume, optimize construction traffic, and provide erosion control and stormwater management. Erosion control and stormwater management design has been carried out in accordance with the Ohio Department of Natural Resources manual "*Rainwater and Land Development*", 2nd ed.) [1996]. The test pad construction area shown in Figure 4-1 is designed to control erosion and manage stormwater in accordance with the following criteria:

- the stormwater management system is designed to minimize erosion and off-site sedimentation;
- runon from undisturbed areas upslope of the test pad construction area will be diverted around the test pad construction site;
- runoff from within the disturbed area will be contained in the area until it infiltrates into the ground or is filtered through a check dam; and
- upon completion of the testing program, the test pad construction area will be regraded to approximately the pre-construction grades and revegetated using a seed/mulch cover to re-establish the natural drainage and erosion characteristics of the area.

Key elements of the design include a runon diversion ditch, to divert upslope stormwater around the construction area, and silt fence/straw bale filter check dams in the runon diversion ditch and down slope of the construction area, to minimize transportation of sediment to undisturbed areas. The runon diversion ditch will divert runoff from the grassed area upgradient of the test pads. Temporary culverts will be installed under the construction access road near its intersection with the North Entrance Road. The existing topography indicates that the resulting flow around the test pad construction site will be sheet flow or shallow concentrated flow, and that the flow depths and velocities will be small. Details of these erosion and sediment control features are shown in Figures 5-2 and 5-3. Details of the temporary culverts under the construction access road are shown in Figure 5-4.

5.3 Excavation Dewatering

The Test Pad Contractor will be responsible for managing perched ground water that enters the borrow area excavation. The Test Pad Contractor will use a sump pump, or other appropriate means, to transferring pumped water (via tanker truck or other means) to the on-site detention facility for investigation derived waste (IDW), or other appropriate location specified by the Construction Contracts Manager.

TEST PAD DETAILS

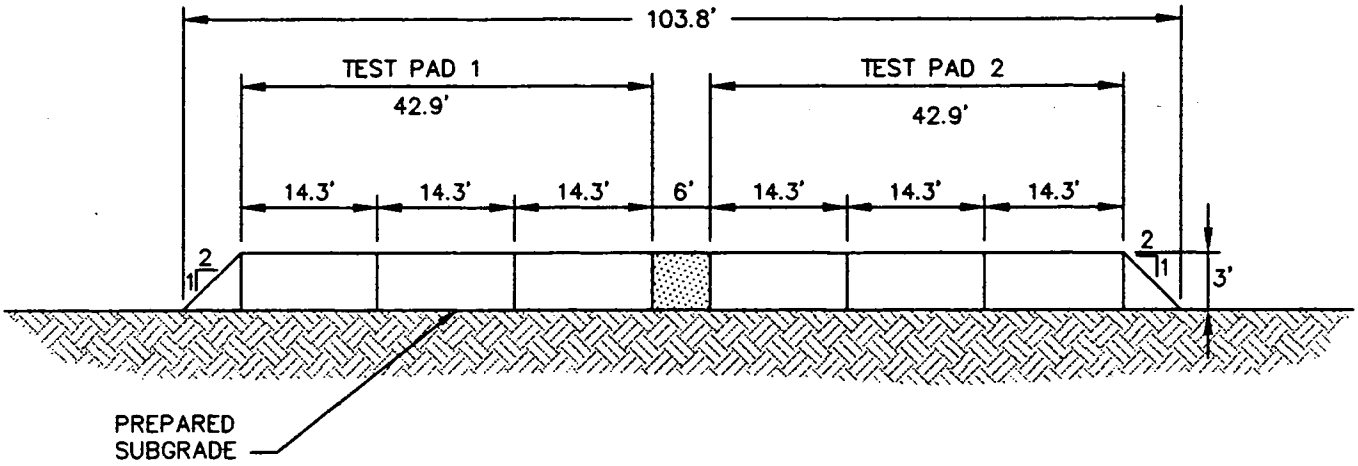

A / 4-1 SECTION
TEST PADS 1 AND 2
HORIZONTAL SCALE: 1" = 20'
VERTICAL SCALE: 1" = 10'

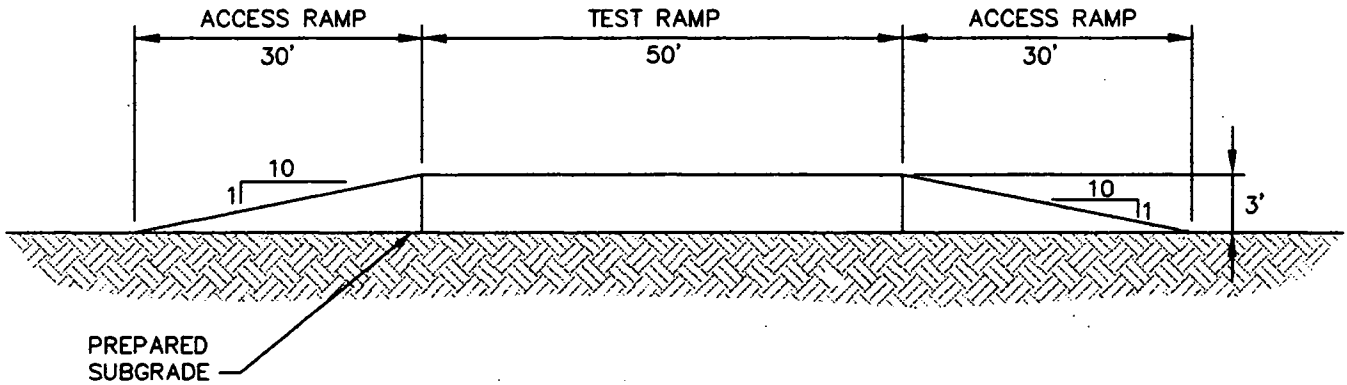

B / 4-1 SECTION (TYPICAL)
TEST PAD
HORIZONTAL SCALE: 1" = 20'
VERTICAL SCALE: 1" = 10'

000055

NOTE:
SUBGRADE PREPARATION SHALL CONSIST OF TOPSOIL REMOVAL, GRADING TO REQUIRED ELEVATIONS, PROOFROLLING, AND BACKFILLING IN ACCORDANCE WITH SECTION 02220 OF THE TEST PAD CONSTRUCTION SPECIFICATIONS.

GEOSYNTEC CONSULTANTS
ATLANTA, GEORGIA

FIGURE NO.	5-1
PROJECT NO.	G3900-4.1
DOCUMENT NO.	F9530008
FILE NO.	3900A014.DWG

TEST PAD CONSTRUCTION SITE DETAILS

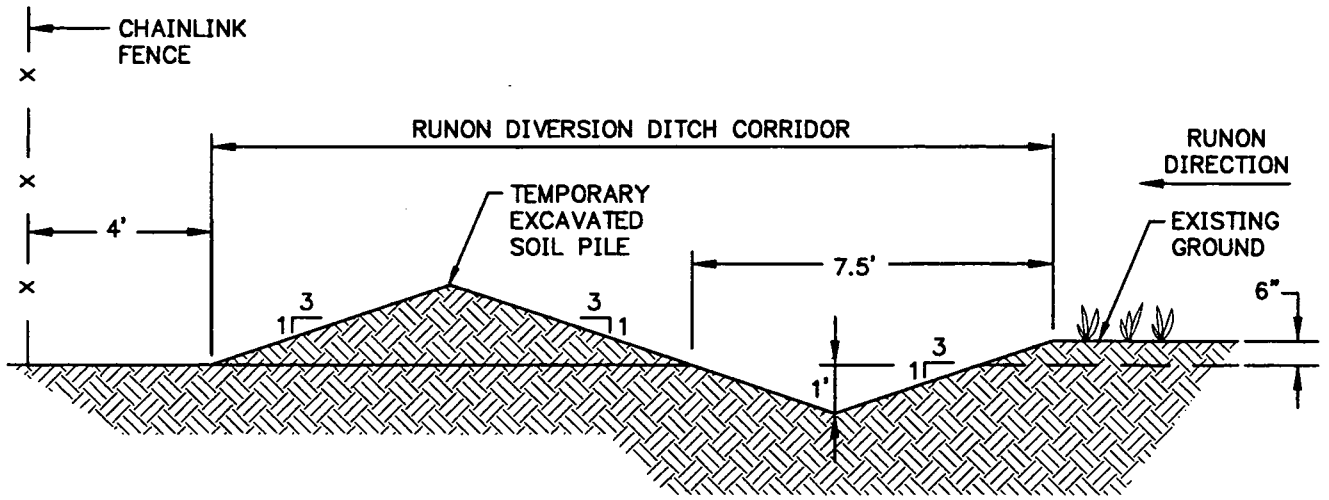

C 4-1 SECTION
RUNON DIVERSION DITCH
SCALE: NTS

NOTE: TOPSOIL SHALL BE REMOVED TO A DEPTH OF 6 INCHES FROM THE RUNON DIVERSION DITHC CORRIDOR PRIOR TO EXCAVATION OF THE RUNON DIVERSION DITCH.

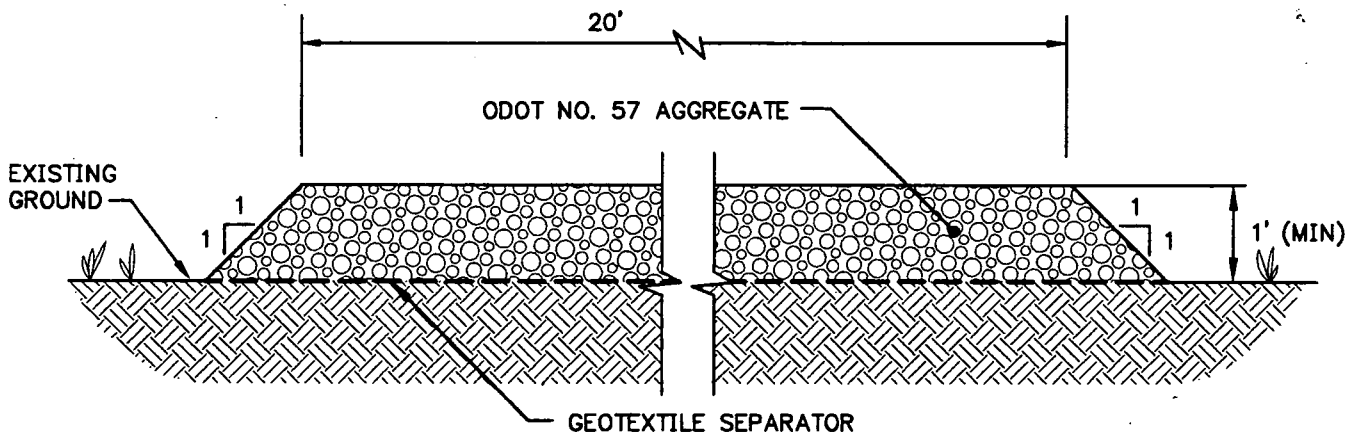

D 4-1 DETAIL (TYPICAL)
CONSTRUCTION ACCESS ROAD
SCALE: NTS

GEOSYNTEC CONSULTANTS
ATLANTA, GEORGIA

FIGURE NO.	5-2
PROJECT NO.	GE3900-4.1
DOCUMENT NO.	F9530008
FILE NO.	3900B013.DWG

EROSION AND SEDIMENT CONTROL DETAILS

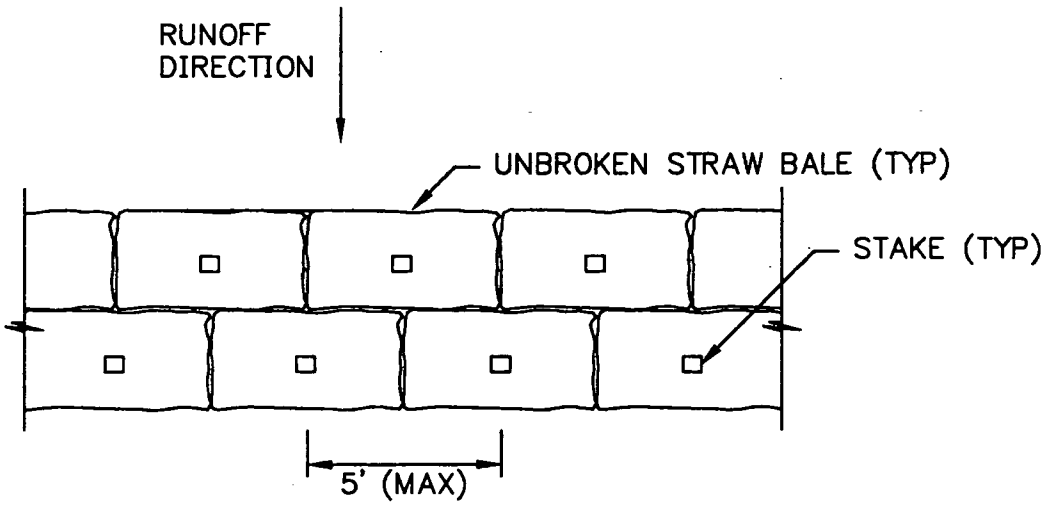

PLAN (TYP)

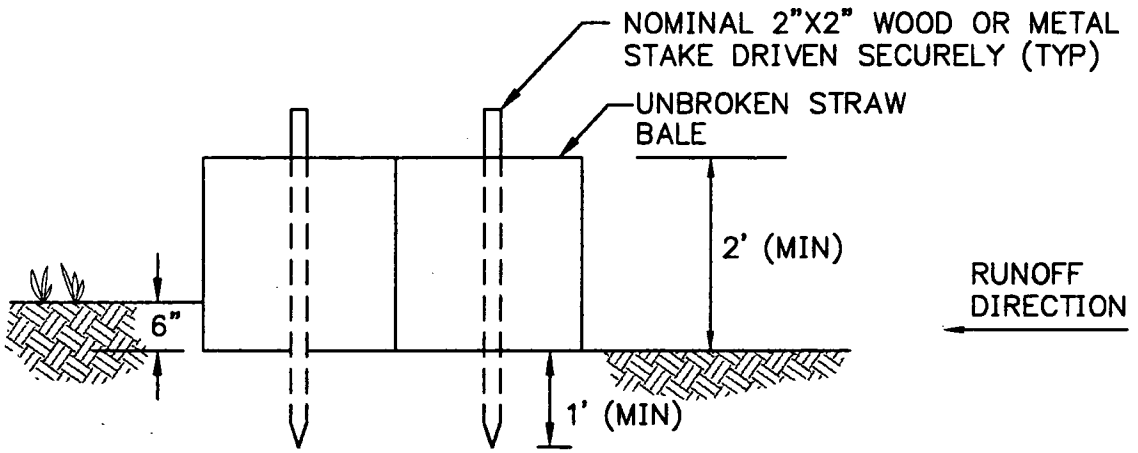

SECTION (TYP)

E 4-1 DETAIL
STRAW BALE FILTER BARRIER

000057

SCALE: NTS

GEOSYNTEC CONSULTANTS
ATLANTA, GEORGIA

FIGURE NO.	5-3
PROJECT NO.	GE3900-4.1
DOCUMENT NO.	F9530008
FILE NO.	3900B015.DWG

CULVERT DETAILS

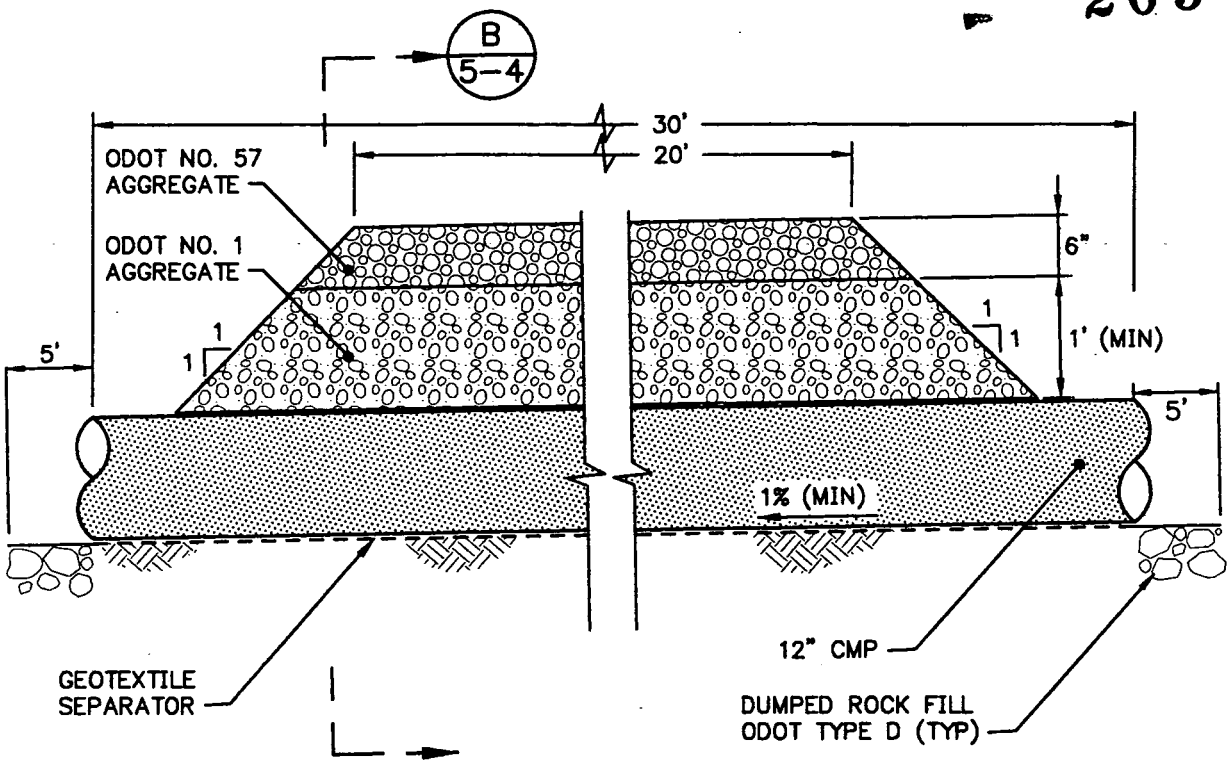

A 4-1 SECTION
CMP UNDER CONSTRUCTION ACCESS ROAD
SCALE: NTS

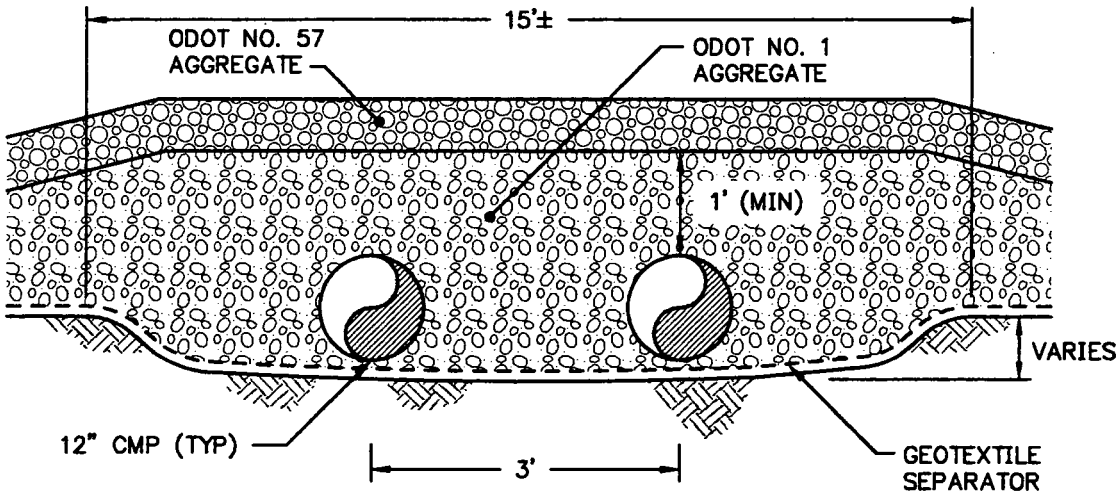

B 5-4 SECTION
CMP UNDER CONSTRUCTION ACCESS ROAD
SCALE: NTS

000058

NOTE: CONTRACTOR SHALL ESTABLISH GRADES OF CMP IN THE FIELD TO MATCH THE ELEVATION OF THE BOTTOM OF THE DIVERSION DITCH ON THE UPGRADIENT SIDE.

GEOSYNTEC CONSULTANTS
ATLANTA, GEORGIA

FIGURE NO.	5-4
PROJECT NO.	GE3900-4.1
DOCUMENT NO.	F9530008
FILE NO.	3900B012.DWG

6. TEST PAD CONSTRUCTION

6.1 Introduction

The purpose of this section is to describe the general sequence of construction activities, and summarize the construction methods that will be used to construct the test pads. A Test Pad Contractor will be retained by the Construction Contracts Manager on a time and materials basis to construct the test pads.

The Test Pad Contractor is responsible for performing the work in accordance with this TPWP and the Construction Specifications presented in Appendix C. The remainder of this section describes the test pad construction operations including: (i) pre-construction meeting; (ii) site preparation; (iii) borrow material preparation; (iv) placement and compaction of lifts; and (v) surveying. Where appropriate, references are made to sections of the Construction Specifications which are specifically relevant to these operations. A list of the Construction Specifications presented in Appendix C is provided below.

- Division 1: General
  - Section 01000, *General Requirements*
  - Section 01050, *Surveying*
  - Section 01600, *Materials and Equipment*

- Division 2: Site Work
  - Section 02110, *Clearing, Grubbing, and Stripping*
  - Section 02200, *General Earthwork*
  - Section 02220, *Compacted Clay Test Pads*
  - Section 02270, *Erosion and Sediment Control*
  - Section 02950, *Site Restoration*

6.2 Pre-construction Meeting

A pre-construction meeting will be held at the site not more than two days prior to the start of test pad construction. At a minimum, the meeting will be attended by the Test Pad Contractor superintendent, CQA Engineer site manager, Construction Contracts Manager, and DOE representatives as appropriate. The agenda for this meeting will include:

- overall project objectives and scope;
- any foreseen modifications to the TPWP;
- responsibilities of each party;
- lines of authority and communication;
- methods for documenting and reporting;
- methods for distributing documents and reports;
- Test Pad Contractor's proposed list of equipment;
- field and laboratory testing protocols;
- protocols for handling deficiencies, repairs, and retesting of any component of the test pads;
- project H&S requirements;
- protocol for work area security and safety; and
- schedule for construction and testing operations.

Minutes of the meeting will be recorded by the CQA Engineer. The minutes will be transmitted to all participants within two working days.

6.3 Site Preparation

The first phase of test pad construction is site preparation which includes: (i) site layout and access; (ii) clearing, grubbing, and stripping; (iii) establishing erosion and sediment control; and (iv) establishing temporary facilities. Sections of the Construction Specifications which are specifically relevant to these activities include 01550, 02110, 02200, and 02270.

The general sequence of construction activities that the Test Pad Contractor will follow for site preparation are:

- construct the construction access road and temporary culverts as shown on Figures 4-1, 5-2, and 5-4;
- install the silt fence and straw bale filter check dam as shown on Figures 4-1 and 5-3;
- remove topsoil and vegetation from the test pad area and borrow excavation area, and construct the runon diversion ditch (see Figures 4-1 and 5-2);
- install securing fencing as shown on Figure 4-1; and
- mobilize temporary construction facilities (e.g., trailers, sanitary facilities, etc.) to the test pad construction site.

The surveyor, which will be from the Construction Contracts Manager, will establish and mark the construction access road and limits of the test pad construction site prior to the Test Pad Contractor's mobilizing to the site. Following site preparation activities, the Surveyor will establish (survey and mark) the location of the borrow excavation and test pads.

6.4 Borrow Material Preparation

The test pads will be constructed using the upper horizon brown till and lower horizon brown till obtained from the borrow excavation shown in Figure 4-1. The contractor will be required to process the borrow materials prior to placing them on the test pads. Processing consists of mechanical mixing and moisture conditioning to reduce clod size and distribute moisture evenly through the soil. Processing can be performed in the borrow excavation or at another location within the test pad construction site. Processing will also involve removal of oversized particles visually observed by a spotter. Visual spotting should be adequate for oversized particle removal because it is anticipated that the number of such particles is small.

As an initial part of the test pad program, borrow material processing techniques will be evaluated. The preferred methods of soil processing will be discing or raking, as these have proven to be very cost effective on many previous projects. Discing

refers to making multiple passes over the soil with a heavy-duty construction disc (harrow) pulled by a bulldozer. Raking refers to making multiple passes over the soil with a rock rake (i.e., series of rigid hooked teeth spaced at 6 to 12 in. (0.15 to 0.30 m) mounted on a transverse bar attached to a bulldozer). Several passes with either of these methods will be made over soil in the borrow excavation to evaluate the effectiveness in reducing clod size and distributing moisture evenly through the soil. The CQA Engineer will direct the number of passes, the application of water, and field testing to evaluate the effectiveness of the soil processing method.

During the evaluation of the two soil processing methods, a distinction between clods and remolded lumps of soil will be made. At the moisture conditions likely to be targeted during compacted clay layer construction, remolded lumps of flexible and properly moisture conditioned soil may form easily. These lumps are acceptable because they are homogeneous and are easily incorporated into the lift of compacted clay. Remolded lumps can be easily broken apart by hand. Clods, on the other hand, are defined as large particles of clay with a hard core of soil not homogeneous with respect to the overall material being processed. The core of a large clod may be drier than the target moisture content of the material being processed and may retain the in-situ structure of the till. Large clods are not acceptable for incorporation in the lift.

If either or both of these methods (discing and/or raking) are found by the CQA Engineer to be inadequate, the Test Pad Contractor will be required to mobilize a transverse rotary mixer (e.g., Caterpillar SS-250, RayCo Gator, Bros LSPRM-8, or similar) to the site within 48 hours. The transverse rotary mixer, a technique that is more expensive than discing or raking, but which experience has shown to be more effective than discing or raking in reducing clod size and distributing moisture in most soils, will be used to mechanically pulverize the soil.

After the preferred method of soil processing has been selected by the CQA Engineer, the Test Pad Contractor will be required to process material from each horizon of the brown till to uniformly distribute the moisture and reduce the clod size to no larger than 3 in. (75 mm), or half the lift thickness, whichever is less. The Test Pad Contractor will be responsible for processing the soil to achieve uniform moisture content within ± 1.0 percentage point of the target moisture content in the compacted lift.

6.5 Placement and Compaction of Lifts

The general sequence of activities for placement and compaction of each lift of processed borrow material on the test pads is listed below (Section 02220 of the Construction Specifications (Appendix C) is specifically relevant to these activities):

- moisture condition and scarify the surface of the subgrade or previous clay lift prior to placing any subsequent material; note that for each test pad, a given lift will be constructed across all three lanes at the same time;
- spread the processed clay using a bulldozer to a loose lift thickness of 8 in. (200 mm);
- compact the lift using the specified number of passes of the compactor in each lane; and
- provide (e.g., backblade) smooth nuclear moisture/density test locations as directed by the CQA Engineer; as indicated in Section 7.3.3 of this TPWP, CQA personnel will evaluate moisture content and dry density using the nuclear gauge at not less than three locations per lane per lift.

If the CQA Engineer indicates that the moisture content is not within the target range, the Test Pad Contractor will be instructed to further process the material in the entire lift (e.g., disc, rake, or pulverize to allow it to dry or blend additional water into the soil) until an acceptable uniform moisture content is obtained. Alternatively, the Test Pad Contractor may be directed by the CQA Engineer to remove the lift and replace it with suitable material.

The number of passes (i.e., one-way trip across the test fill) of the Caterpillar 815 will be specified by the CQA Engineer. It is anticipated that a minimum of 4 passes in Lane 1; 6 passes in Lane 2; and 10 passes in Lane 3 will be specified. The number of passes to accomplish the targeted range of dry density, however, may need to be modified. In all cases, the minimum number of passes will be four and the Test Pad Contractor will provide the number of passes specified by the CQA Engineer.

The final lift (Lift No. 6) will be backbladed with a bulldozer after compaction and lightly compacted with a smooth drum roller until smooth. To protect SDRI test locations, the Test Pad Contractor will cover a 16 ft by 16 ft (5 m by 5 m) area selected by the CQA Engineer in each lane with flexible plastic sheeting (e.g., visqueen) that is at least 8 mils (0.2 mm) thick. The plastic sheeting in Lanes 1 and 2 of each test pad will be continuously anchored at the edges using continuous rows of sandbags. The plastic sheeting in Lane 3 of each test pad will be continuously anchored at the edges in a 4 in. by 4 in. (0.1 m by 0.1 m) anchor trench, and the plastic sheeting will be covered completely with a 12-in. (0.3-m) thick layer of excess soil (i.e., stockpiled topsoil or brown clay).

6.6 Surveying

A licensed or otherwise appropriately trained and qualified (as established by the Construction Contracts Manager) Surveyor will provide surveying equipment and personnel for construction layout and monitoring. The Surveyor will be a member of the Construction Contracts Manager's organization. Section 01050 of the Construction Specifications (Appendix C) is specifically relevant to these activities. Surveying activities, prior to and during the test pad construction phase, will include:

- establishing at least three control points located at convenient locations in close proximity to the test pads and borrow area that are referenced to the site coordinate system and National Geodetic Vertical Datum (NGVD);
- staking the locations for the construction access road, security fence, silt fence, diversion berms, and borrow excavation; and
- staking toe and crest lines of the test pads as needed during construction to control the work.

During test pad construction, the CQA Engineer will provide surveying assistance to the Surveyor for monitoring compacted lift thickness. For each lane, the elevation of the top of the compacted lift (measured at the bottom of compactor cleat marks) will be measured using a survey level or laser. The same locations will be surveyed for every lift so accurate thicknesses can be determined.

7. TEST PAD CQA PLAN

7.1 Overview

This CQA monitoring, testing, and documentation program will be implemented as part of the test pad program. The CQA program is designed to verify that construction materials, equipment, and procedures used in the test pad program are in conformance with this TPWP. This CQA plan addresses:

- CQA personnel requirements;
- CQA field, office, and laboratory activities; and
- CQA documentation.

7.2 CQA Personnel Requirements

During test pad construction, the CQA Engineer will provide a CQA Site Manager and CQA technician on-site on a full-time basis. The CQA Engineer will direct the activities of the CQA Technician(s). These individuals will be responsible for providing specific direction to the Test Pad Contractor, performing field CQA activities, and installing the SDRIs. In addition, CQA personnel will be responsible for making every effort to anticipate problems before they occur and providing the Test Pad Contractor with direction or guidance, as appropriate, to prevent the problem.

The qualification and experience requirements for the CQA Site Manager are as follows:

- Bachelor of Science degree in Civil Engineering;
- minimum two years of experience in landfill design and construction;
- experience in providing CQA for construction of at least 15 acres (7 ha) of compacted clay liner or cap for one or more solid waste disposal facilities;
- experience as a CQA site manager for at least two compacted clay liner or cap projects;

- certified to operate a nuclear moisture/density gauge;
- experience installing at least one SDRI test; and
- current Occupational Safety Health Administration (OSHA) 40 hour certification in health and safety training for hazardous waste site activities [29 CFR 1910.120].

The qualifications and experience requirements of the CQA Technician are as follows:

- at least one year of experience providing CQA Technician services for earthwork construction at solid waste disposal facilities;
- experience in providing CQA for the construction of at least 10 acres (4 ha) of compacted clay liner or cap for one or more solid waste disposal facilities;
- certified to operate a nuclear moisture/density gauge; and
- current Occupational Safety Health Administration (OSHA) 40 hour certification in health and safety training for hazardous waste site activities [29 CFR 1910. 120].

7.3 CQA Activities

7.3.1 Laboratory Testing Program

The CQA Site Manager will monitor, conduct, and document the sampling activities for the pre-construction laboratory testing program previously described in Section 4 of this TPWP. The CQA Site Manager will mobilize to the site to monitor sampling activities and will perform the following activities:

- provide the Construction Contracts Manager with survey coordinates for test pit locations; the Surveyor will survey and stake locations prior to the start of test pit excavation activities;
- monitor test pit excavation and collect samples;

- ship the samples to the CQA geotechnical testing laboratory; and
- document observations of soil composition and take photographs.

7.3.2 Site and Subgrade Preparation

During the site and subgrade preparation phase, CQA personnel will monitor and document the Test Pad Contractor's activities to ensure that the requirements set forth in the Construction Specifications (Appendix C) are satisfied. The CQA personnel will monitor, verify, and document the following construction activities:

- site surveying and layout;
- installation of silt fence;
- clearing, grubbing, and topsoil removal;
- installation of runon control berms; and
- subgrade preparation and proofrolling.

CQA personnel will confirm that the Test Pad Contractor establishes the erosion and sediment control system before surface vegetation and topsoil is removed. The CQA Site Manager will visually evaluate the suitability of the subgrade and borrow area surface before clay processing commences.

7.3.3 Test Pad Construction

During construction of the test pads, CQA personnel will monitor and document that the Test Pad Contractor's activities satisfy the requirements set forth in the Construction Specifications (Appendix C). Any identified deficiencies will be resolved with the Test Pad Contractor, and if necessary, the Construction Contracts Manager will be involved in this process. Prior to commencing test pad construction, the CQA personnel will calibrate the nuclear moisture/density gauge to sand cone density and oven moisture content tests conducted at three separate locations in the borrow excavation area.

CQA personnel will monitor processing and placement of the processed clay in the test pads. The following monitoring activities will be performed for each test pad:

- evaluating the adequacy of the discing, raking (or pulverizing) operations to blend the material and to reduce the maximum clod size to not more than 3 in. (75 mm) in largest dimension or half the lift thickness, whichever is less;
- verifying that particles larger than 2 in. (50 mm) in largest dimension are removed;
- monitoring the final adjustment of moisture content to within ± 1.0 percentage point of the test pad target moisture content prior to compaction; to facilitate this process, CQA personnel will perform nuclear moisture tests (ASTM D 3017) in the processing area;
- verifying a maximum loose lift thickness of 8 in. (200 mm) ± 1 in. (25 mm);
- verifying the total test pad thickness of 3 ft (0.9 m) + 2 in. (50 mm);
- verifying the correct approximate speed of compaction equipment;
- verifying that each lift is scarified prior to placement of the next lift;
- verifying uniform coverage of each lift by the compactor; and
- monitoring the number of passes.

After the specified number of passes of the compactor, the CQA personnel will perform the monitoring activities listed below for each lift of every test pad.

- CQA personnel will assist the Surveyor in surveying the elevation of the lift at the specified locations and document the compacted thickness of each lift.
- CQA personnel will evaluate the moisture content and the dry density of the compacted clay at three locations per lane per lift using the nuclear gauge (ASTM D 2922 and 3017). During compaction of the first lift, CQA personnel will determine the number of passes required in each lane to produce the desired range of dry densities. The minimum acceptable number of passes is four. CQA personnel will document that all other lifts are

compacted using the same number of passes in each lane as used in the first lift (i.e., each lane shall have the same compactive effort in each lift).

- CQA personnel will evaluate bonding between lifts by hand excavating a test hole approximately 1.5 ft (0.4 m) by 1 ft (0.3 m) wide and 0.8 ft (0.2 m) deep at one location per lane. If poor bonding is detected, the CQA Site Manager may direct the Test Pad Contractor to reduce the loose lift thickness of subsequent lifts and/or provide deeper scarification of the previous lift prior to placement of the processed soil. The Test Pad Contractor will be required to repair test holes by filling the holes with moisture-conditioned borrow material and compacting the borrow material to a dry density similar to that determined for the lift. CQA personnel will select test hole locations so that they are outside the area that will subsequently be used for SDRI testing. The Test Pad Contractor will be prepared to make a soil-bentonite mixture for repair of holes if directed by the CQA Engineer.

- CQA personnel will obtain one 15-lb (7-kg) grab sample per lift from each test pad for standard Proctor compaction testing. It is anticipated that approximately two of the six resulting grab samples per test pad will actually be tested; selection of the specific samples for testing will be made by the CQA Engineer. If significant variation in standard Proctor compaction test results is observed, additional tests may be performed as directed by the CQA Site Manager. DQOs for these samples and tests are presented in Appendix F of this TPWP.

- CQA personnel will obtain one Shelby-tube sample per lane per lift for permeability testing. All 36 samples will be sent to the CQA geotechnical laboratory for permeability testing. The hydraulic conductivity of each specimen will be evaluated at effective confining stresses of 2 psi (13.8 kPa), 5 psi (34.5 kPa), and 10 psi (68.9 kPa). The Shelby tube sampling protocols are presented in Appendix D of this TPWP. DQO's for these samples and tests are presented in Appendix F of this TPWP.

- CQA personnel will evaluate the moisture content and dry density of the compacted clay at least once per day using the sand cone test (ASTM D 1556) to provide frequent calibration of nuclear gauge test results.

- CQA personnel will verify that all perforations made in the test pad for sand cone testing, nuclear gauge testing, Shelby tube sampling, and test holes are repaired. The Test Pad Contractor will repair all perforations to the satisfaction of the CQA Engineer.

- CQA personnel will verify that the area of the test pads designated for SDRI testing are bladed level and lightly rolled with a smooth drum roller prior to testing.

Any identified deficiencies with the Test Pad Contractor's work will be documented by CQA personnel. These deficiencies will be addressed with the Test Pad Contractor for resolution. If necessary, the Construction Contracts Manager will be brought into the resolution process. Resolution activities will be fully documented.

7.4 Documentation

Documentation of the sampling, testing, construction, and maintenance operations during the test pad program is a primary responsibility of the CQA Engineer. The CQA Engineer will produce the following documentation:

- a file of the Test Pad Contractor's submittals, laboratory test results, summaries of CQA observations and field test results, survey notes, and communications;

- results of the pre-construction laboratory testing;

- pre-construction meeting minutes; and

- daily reports documenting construction and CQA for each day of construction, sampling, or field testing.

Documentation of sample collection, field test results, and CQA inspections will be made on the standard CQA forms presented in Appendix E of this TPWP. The use of standard forms will assure that the necessary information is documented for each sampling event, field test, or inspection.

CQA personnel will prepare a daily report on each day of sampling, field testing, or construction. The daily reports will be submitted to the Construction Contracts Manager within one day of the activity documented. At a minimum, the daily report will document:

- weather conditions;
- equipment and key personnel on site;
- hours of operation;
- summary of progress;
- equipment used;
- test pad number, lane, and lift under construction;
- description of construction procedures and the performance of the procedures;
- summary of field testing and CQA inspections including test frequencies and results;
- any deficiencies in the work; and
- for each deficiency noted, a description of the procedures used to resolve the deficiency.

CQA documentation will be included in the test pad program final report described in Section 11 of this TPWP.

8. FIELD PERMEABILITY TESTING

8.1 Introduction

The purpose of this section of the TPWP is to describe the field testing techniques that will be used to evaluate the hydraulic conductivity of the test pads. Field permeability testing will be conducted by the CQA Engineer. The results of the field permeability testing program will be used to demonstrate that the field permeability of the test fill satisfies the OU2 ARARs. DQOs for the field permeability testing program are presented in Appendix F of this TPWP.

Two SDRI tests will be used to measure the field hydraulic conductivity of two different lanes of each test pad. The SDRI tests will be conducted after construction of the final lift of each test pad is complete. The actual location and orientation of each SDRI will be established by the CQA Engineer after construction of the test pad.

8.2 Sealed Double-Ring Infiltrometer Testing

8.2.1 Overview

The sealed double-ring infiltrometer (SDRI) is a testing device used for evaluating the field hydraulic conductivity of low-permeability soils. It consists of a 12 ft by 12 ft (3.6 m by 3.6 m) outer ring which is 3 ft (0.3 m) in height and a 5 ft by 5 ft (1.5 m by 1.5 m) inner ring which is 18 in. (0.45 m) in height. The outer ring is embedded in the soil to a depth of 14 to 18 in. (0.35 to 0.45 m) while the inner ring, which is centered within the outer ring, is embedded to a depth of 4 to 6 in. (0.1 to 0.15 m). The outer ring is open to the atmosphere and is filled with water to a depth of approximately 12 in. (0.3 m). The inner ring is shorter than the outer ring and has a top which seals the water within the inner ring from the atmosphere. A schematic illustration of the SDRI is presented in Figure 8-1. A copy of the ASTM standard for SDRI testing (ASTM D 5093) is presented in Appendix B of this TPWP.

Measurement of infiltration in the SDRI test is accomplished by connecting a flexible bag filled with a known mass of water to a port on the sealed inner ring and submerging the bag in the annular space between the inner and outer ring. In the test,

water percolates downward from both the inner and outer rings. As water leaves the inner ring and flows into the ground, it is replaced with an equal amount of water drawn from the flexible bag. At specific time intervals, the flexible bag is weighed. The loss in weight of the bag corresponds to the weight of water that has infiltrated the ground. From a knowledge of the weight of water that has entered the ground, the infiltration rate can be determined. The process of evaluating the weight loss during a specified interval of time is repeated and a relationship of infiltration rate versus time is developed. The test is continued until the infiltration rate becomes steady or until it becomes equal to or less than a specified value. The infiltration rate is used to calculate the test pad hydraulic conductivity.

8.2.2 Selection of SDRI Test

The two types of tests most often considered for field testing of compacted clay liners and caps are the sealed double-ring infiltrometer (SDRI) test and the two-stage borehole (TSB) test. The selection of one test versus another for use in a specific test pad program is based on a variety of project-specific factors. The SDRI was selected for evaluation of the FEMP OSDF test pad after careful consideration of these factors, which are discussed below.

The five factors that were specifically considered in selecting the SDRI test over the TSB test for the OSDF project are:

i) The SDRI test is better than the TSB test at simulating the actual behavioral mechanism of leakage through a compacted clay liner or cap, i.e., vertical infiltration. The SDRI was specifically designed to simulate vertical infiltration, whereas the flow pattern in the TSB test is more complex. As stated by Trautwein and Boutwell [1994], "The advantages of the SDRI test are that large areas can be ponded, flow is one dimensional, and infiltration is a direct measure of leakage rate, except when swelling is present".

ii) The SDRI test utilizes a much larger volume of soil than a TSB test. The area of the inner ring for a SDRI test is 25 ft^2 (2.3 m^2). The TSB test in the first stage configuration (which is the configuration that more closely simulates vertical infiltration) is about 0.2 ft^2 (0.02 m^2). Thus, the ratio of areas is 125:1. Clearly, the SDRI tests a much larger area than the TSB.

The advantages of performing large scale tests have been recognized by many researchers including Daniel [1989], Trautwein and Williams [1990], and Benson et al. [1994].

iii) The scale difference between the SDRI test and TSB test may not be significant for a clay liner or cap compacted to a homogenous structure and low hydraulic conductivity [Benson, et al., 1994; Trautwein and Boutwell, 1994]. However, for test pads that contain secondary structures (e.g., small cracks or fissures, soil clods, preferential flow pathways), the SDRI test, with its larger scale, is better able to reveal the secondary structure and thus provide an indication that the compacted clay liner or cap is inadequately constructed. For this latter case, Benson et al. [1994] suggest that "field-scale hydraulic conductivity can be measured on specimens with a diameter of at least 0.30 m and a thickness of at least 0.15 m." The SDRI test meets this criterion, but the TSB test does not. This is a particularly important point for the brown till at the FEMP. This material classifies primarily as a lean clay (particularly the lower-horizon material), is relatively silty, and may require significant compaction effort (i.e., Lane 2 or 3 compaction effort) to achieve the required hydraulic conductivity. The SDRI is a better test than the TSB for revealing secondary structure that may exist in this material when compacted.

iv) A specific ASTM test method has been developed for the SDRI test (ASTM D 5093). No ASTM standard exists for the TSB. It is advantageous to use a test procedure for which an ASTM standard exists. Also, it is noteworthy to review the Significance and Use section of ASTM D 5093:

"5.1 This test method provides a means to measure low infiltration rates associated with fine-grained, clayey soils, and are in the range of 1×10^{-7} m/s to 1×10^{-9} m/s.

5.2 This test method is particularly useful for measuring liquid flow through soil moisture barriers such as compacted clay liners or covers used at waste disposal facilities, for canal and reservoir liners, for seepage blankets, and for amended soil liners such as those used for retention ponds or storage tanks.

5.3 The purpose of the sealed inner ring is to: (1) provide a means to measure the actual amount of flow rather than a drop of water elevation which is the flow measurement procedure used in Test Method D 3385 and (2) to eliminate evaporation losses.

5.4 The purpose of the outer ring is to promote one-dimensional, vertical flow beneath the inner ring. The use of large diameter rings and large depths of embedment helps to ensure that flow is essentially one-dimensional.

5.5 This test method provides a means to measure infiltration rate over a relatively large area of soil. Tests on large volumes of soil can be more representative than tests on small volumes of soil."

v) The SDRI test is the most common method for measuring the field hydraulic conductivity of test pads [USEPA, 1993]. The experience base with test pads evaluated using SDRIs is much broader than the experience base with test pads evaluated using TSB tests.

Potential advantages of TSB are as follows:

i) The TSB test has the advantage over the SDRI test of being repeatable with depth in a borehole. This advantage is primarily applicable when it is necessary to evaluate the vertical distribution of hydraulic conductivity in a natural soil deposit, such as a clay aquiclude. The vertical distribution of hydraulic conductivity is typically not evaluated in clay liner test pad programs.

ii) The TSB test has the advantage that it can be repeated at several different locations across the test pad, whereas the SDRI test is performed at a single location. Thus, the TSB is a potentially useful tool for evaluating the variability of the test pad hydraulic conductivity from location to location. The evaluation of this variability is not a stated objective of the test pad program. Furthermore, if the test pad is adequately constructed, the variability should be small. If it is inadequately constructed, the variability will be larger, but this variability may not be revealed by TSB testing due to the limited ability of the TSB test to detect secondary structures in the compacted clay.

iii) The TSB test has the advantage that it is quicker to perform than the SDRI test. However, this is not a significant issue for the OSDF test pad program, as the test pad program schedule, including the contingency period required if failing test results are initially obtained (Lane 1 test pad) and an additional test is needed (Lane 3 test pad), can be accommodated within the overall project schedule.

Based on a review of the relative advantages of the SDRI and TSB tests, the SDRI was selected for the FEMP OSDF test pad program.

8.2.3 Installation of SDRI

Installation of the SDRI apparatus on the test pads will be carried out by the CQA Engineer using the following general steps:

- prepare the test fill area by blading the surface and lightly rolling using a smooth-drum roller;
- excavate trenches to seat the inner and outer rings;
- install the rings and seal them in grout to prevent leakage under the rings;
- fill the rings slowly to check for leaks;
- install the required fittings and the flexible bag on the inner ring; and
- cover the rings with an insulated plywood deck to prevent large temperature fluctuations and water loss.

Installation of the four SDRIs will be performed by the CQA Site Manager and up to six CQA Technicians (or a combination of CQA Technicians and Test Pad Contractor skilled laborers, if available). The final locations of the SDRIs on each test pad will be established by the CQA Engineer after completion of test pad construction.

Tensiometers (which measure pore water suction) will be installed at depths of approximately 6, 10, and 14 in. (0.15, 0.25, and 0.35 m) at three locations in the annular space between the inner and outer rings. Monitoring of the tensiometer readings provides information regarding the location of the wetting front. This

information is useful in estimating the hydraulic gradient in the soil during the test. The hydraulic gradient is needed to calculate hydraulic conductivity. The tensiometers will be installed in intimate contact with the test fill soils.

For installation of the SDRIs, the Test Pad Contractor will be required to provide:

- a trenching machine which is capable of excavating a trench 18 in. (0.45 m) deep and 4 to 6 in. (0.10 to 0.15 m) wide;
- a chain saw capable of cutting a trench 4.5 in. (110 mm) deep by 2 in. (50 mm) wide;
- a large capacity grout mixer capable of mixing approximately 200 lbs (0.9 kN) of grout in a single batch;
- a small Bobcat type loader;
- a 110 volt AC generator and a 100 ft (31 m) long extension cord;
- bentonite grout; Volclay Grout, WyoBen Enviroplug, or Bariod Aqua Gel are acceptable; approximately 20 bags, each bag weighing 50 lb (0.2 kN), are required for each SDRI (80 bags total);
- 5-gal (19-l) plastic buckets (five required);
- cinder blocks (three required per SDRI);
- wheel barrows (two required);
- flat-bladed shovels (four required);
- 5-gal (19-l) water bottle with potable water to fill the flexible bag;
- nails, 2 by 4s, plywood sheeting, and insulation to construct a cover for the outer ring of each SDRI;
- water supply and a method of transport for approximately 1,500 gal (5,700 l) of clean water per SDRI;

- 5 to 6 yd^3 (4 to 5 m^3) of loose fill soil per SDRI to build small berms around the outside of each outer ring;
- a 20 ft by 100 ft (6 m by 30 m) roll of plastic sheeting to prevent desiccation of the test fill surface; sand bags will be required to anchor the sheeting; and
- 16 metal fence posts with thin (narrow gauge) wire to allow for measurement of inner-ring movement.

8.2.4 Monitoring

Monitoring of the SDRIs will be performed by CQA personnel in three stages, the duration of each stage of monitoring will be established by the CQA Site Manager as data from the tests become available. The monitoring frequency will be in accordance with the following schedule:

- twice a day for the first two days, and for longer if necessary;
- every day for the first two to three weeks;
- three times a week for the next two to three weeks; and
- twice a week for the final stage of the tests, if required.

The monitoring data will include mass loss measurements of the flexible bag to evaluate flow, water temperature, water level measurements, and tensiometer readings. Sample field data forms are included in Appendix E of this TPWP.

The flow measurement data will be used to construct a plot of infiltration rate versus time. The field hydraulic conductivity will be calculated from these data. The results of this evaluation will be compared to pre-construction laboratory test results and laboratory permeability test results obtained during construction. The SDRI tests will be conducted until one of the following criteria are satisfied:

- more than five consecutive values of calculated hydraulic conductivity are less than 1×10^{-7} cm/s; or

- a stabilized value of calculated hydraulic conductivity is obtained, as indicated by a consistently horizontal plot of calculated hydraulic conductivity versus permeation time.

8.2.5 SDRI Decommissioning

After the SDRI testing is complete, CQA personnel will decommission the SDRI test apparatus. The general sequence of decommissioning activities will be as follows:

- remove plugs, flexible tubing, and bags from the inner ring;
- remove inner-ring movement monitoring system;
- pump or siphon the water out of the outer ring;
- excavate at the corners of the outer ring to expose the bolts;
- remove the bolts from the corners of the outer ring and remove the panels of the outer ring;
- carefully lift the inner ring out of its seal (the seal may need to be removed with a trowel);
- obtain the Shelby tube samples required for the post-construction laboratory testing program (see Section 8.3); and
- clean, dry, and pack the equipment for storage.

8.3 Post-Construction Laboratory Testing

Immediately after removal of the SDRI apparatus from the test pad, samples of the soil layer will be collected within the inner ring to evaluate the final location of the wetting front. Four 36-in. (0.9-m) long Shelby tube samples will be advanced into the test fill within the inner ring. The Shelby tubes will be advanced at each corner of a 3 ft by 3 ft (0.9 m by 0.9 m) square area centered in the inner ring area. Each Shelby tube will be advanced to the full length of the tubes (36 in. (0.45 m)). Since the SDRI tests will be decommissioned immediately prior to site restoration activities by the Test

Pad Contractor, it is anticipated that the Shelby tubes will be advanced with the assistance of bulldozer (or other large piece of equipment) provided by the Test Pad Contractor.

Two of the Shelby tube samples will be used to evaluate the hydraulic conductivity of the test pads in the areas within the inner rings. Three specimens will be obtained from each tube for testing. These specimens will be tested in a laboratory flexible-wall permeameter in accordance with procedures given in ASTM D 5084. The two remaining Shelby tube samples will be used to evaluate the variation of moisture content, dry density, and degree of saturation of the soil as a function of depth. This evaluation will be made on a series of 4-in. (100-mm) long specimens that will be trimmed from each sample. DQOs for the post-construction laboratory testing program are presented in Appendix F of this TPWP.

8.4 Evaluation

A final evaluation of each SDRI test will be performed following completion of the post-construction laboratory testing program. Tensiometer readings will be augmented with the moisture content profile data from the laboratory and the hydraulic gradient used in the initial evaluation of the SDRI tests will be modified if required. Results of the SDRI tests will be tabulated and graphed as a function of permeation time, and the average steady-state hydraulic conductivity of each target compaction condition will be reported. Results of the field-scale (SDRI) test results will be compared to results of the laboratory permeability tests to provide an assessment of the correlation between the two test methods.

The evaluation of the SDRI test results and the laboratory permeability test results will include an assessment of test result reliability and variability. Experience indicates that when appropriate clay liner materials are adequately compacted, hydraulic conductivity test results correlate well to the test compaction conditions; experience further indicates reasonably close correlation between SDRI and laboratory permeability test results when appropriate clay liner materials are adequately compacted [Benson et al., 1994]. Conversely, SDRI and laboratory permeability test results will often differ significantly if the compacted clay construction materials are inadequate. Based on the foregoing discussion, the reliability and variability of test results will be assessed by:

- evaluating which pre-construction laboratory test results (these tests are described in Section 4 "Pre-Construction Laboratory Testing Program" of the TPWP) correlate with the expected trends in hydraulic conductivity versus compaction conditions (i.e., combinations of compaction moisture content and dry density); those results that correlate and that produce an acceptably low hydraulic conductivity will be used to define the acceptable conditions for field compaction (these acceptable conditions are usually referred to as the acceptable permeability zone (APZ)); poor correlation will be used as one of the measures to define the limits of the APZ;

- evaluating the agreement between SDRI test results and laboratory hydraulic conductivity test results; the degree of agreement between SDRI and laboratory permeability test results will influence the selected limits of the APZ and the manner in which laboratory permeability tests can be used as a tool for construction quality control; and

- the post-construction laboratory testing program (these tests are described in Section 8.3 of the TPWP) will provide results for at least four sets of six hydraulic conductivity tests, with each set of tests performed on specimens compacted to the same target moisture content and dry density; these results will be evaluated for variability; mean and standard deviation values of hydraulic conductivity will be calculated for each set of results; the inherent variability of the test results observed in these post-construction tests will be used to further refine the final limits of the APZ.

SCHEMATIC OF SDRI INSTALLED ON TEST PAD

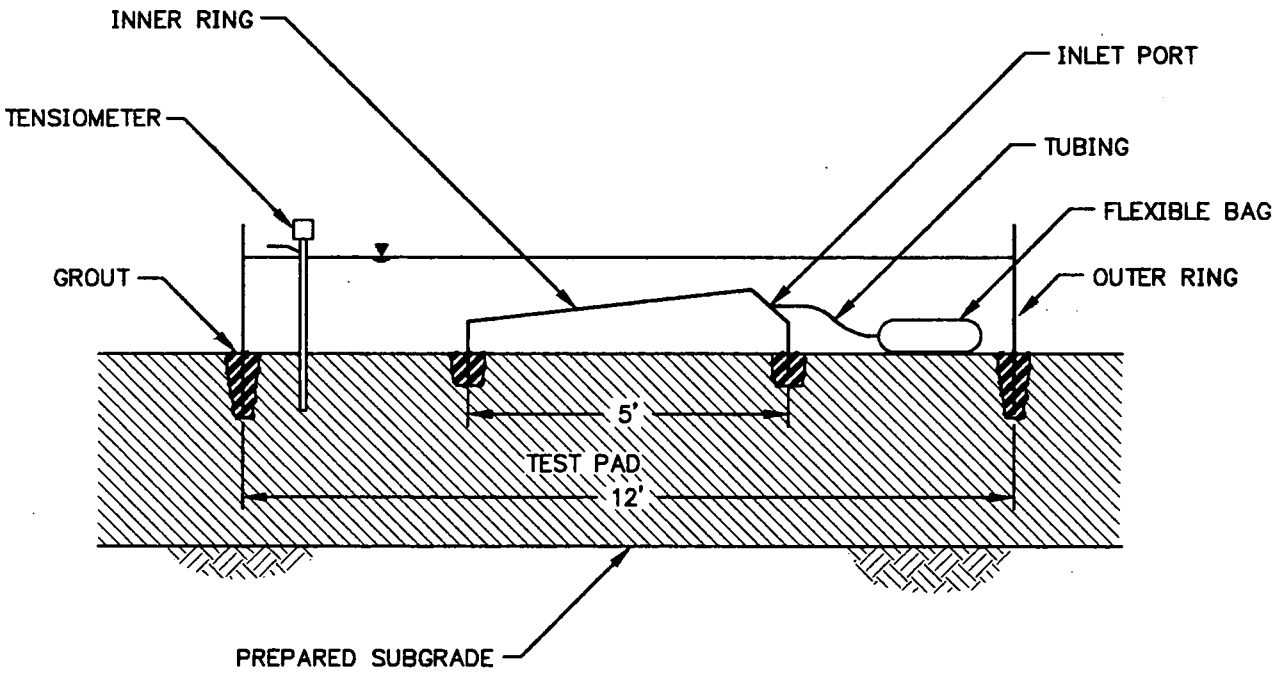

NOTE: SEE APPENDIX B FOR ADDITIONAL SDRI TEST DETAILS.

GEOSYNTEC CONSULTANTS
ATLANTA, GEORGIA

FIGURE NO.	8-1
PROJECT NO.	GE3900-4.1
DOCUMENT NO.	F9530008
FILE NO.	3900B006

9. TEST PAD DECOMMISSIONING

After completion of the in-situ permeability testing program, the Test Pad Contractor will be required to remobilize to the site to decommission the test pads. Section 02950 of the Construction Specifications (Appendix C) is specifically relevant to these activities. The Test Pad Contractor will perform the following operations:

- replace the lower horizon brown till from Test Pad 2 in the bottom of the borrow excavation;
- replace the upper horizon brown till from Test Pad 1 in the top 5 ft (1.5 m) of the borrow excavation;
- backfill the runon diversion ditch and compact by tracking with a dozer;
- perform general regrading of the disturbed areas;
- revegetate the disturbed area by placing a grass seed/mulch layer over these areas;
- install, repair, or otherwise maintain silt fence along the downgradient sides (i.e., the southwest and southeast sides) of the test pad construction site; and
- remove security fence, access road, and culvert.

The silt fence will be left in place and only removed after cover vegetation has been adequately re-established throughout the entire test pad construction area. The Test Pad Contractor will be responsible for removing the silt fence once satisfactory revegetation has occurred.

10. DEVELOPMENT OF CONSTRUCTION SPECIFICATIONS

10.1 Introduction

The results of the test pad program will be used to develop construction specifications for the compacted clay liner and cap components of the OSDF. To the extent necessary, separate specifications will be developed for the upper horizon brown clay and lower horizon brown till. The specifications will provide relevant requirements for each of the following:

- pre-construction laboratory qualification testing;
- borrow material preparation procedures;
- placement and compaction procedures; and
- CQA monitoring and testing requirements during construction of the OSDF.

In each case, the specifications will be developed to satisfy all ARARs and all other requirements developed from the test pad program. These latter requirements will include a provision for the use of a Caterpillar 815 compactor for OSDF compacted clay liner and cap construction. The specifications will not allow the use of a different type of compactor.

10.2 Pre-Construction Laboratory Qualification Testing

Based on review of the variability of the brown till and the results of the test pad program, a pre-construction laboratory qualification testing program will be developed to provide assurance that the specific clay material used in any phase of construction is similar to the material used in the test pad program. The specifications for this program will include minimum testing frequencies and acceptable range of results for the following tests:

- particle size distribution (e.g., percent passing U.S. No. 200 standard sieve and percent clay size particles) (ASTM D 422);
- Atterberg limits (ASTM D 4318);

- USCS classification (ASTM D 2487); and
- standard Proctor compaction test (ASTM D 698).

10.3 Borrow Material Preparation Procedures

Based on observations during test pad construction, specifications for borrow material processing requirements will be established. The acceptable method of mixing and moisture conditioning will be specified. If appropriate, the type of equipment and minimum required number of passes will be specified.

10.4 Placement and Compaction Procedures

Based on the results of the test pad program, specifications for clay placement and compaction procedures will be developed for the upper horizon brown clay and for the lower horizon brown clay. At a minimum, the specifications will provide requirements for:

- acceptable moisture content range;
- required method of spreading the loose lift;
- required method of controlling lift thickness (i.e., maximum spacing between grade stakes);
- maximum loose lift thickness;
- minimum number of passes of Caterpillar 815 compactor;
- minimum degree of saturation; and
- minimum dry density.

10.5 CQA Testing During Construction

Based on the results of the test pad program, requirements for CQA testing during OSDF construction will be developed for the CQA plan. These requirements will specify test frequencies and acceptance results for the following tests:

- nuclear moisture/density test (ASTM D 2922 and 3017);
- sand cone for calibrating the nuclear gauge (ASTM D 1556);
- test excavations for layer bonding; and
- flexible-wall permeability testing (ASTM D 5084).

In addition, CQA field monitoring requirements will be presented to ensure that adequate documentation of construction techniques is provided during construction of the OSDF compacted clay liner and cap.

11. REPORTING

After completion of the SDRI tests, a test pad program field report (TPPFR) will be prepared by the CQA Engineer. The report will contain: (i) all relevant test data and CQA documentation; (ii) a recommendation regarding the suitability of the construction materials used in the test pad for use as compacted clay liner and cap material; and (iii) recommended construction procedures. The report will satisfy the requirements of the OSDF DCP [GeoSyntec, 1995].

The TPPFR will contain:

- results of the pre-construction laboratory testing program and engineering characterization of the brown till material used in the test pad program;
- procedures for compacted clay material processing used during construction of the test pads;
- procedures for compacted clay material moisture conditioning used during construction of the test pads;
- CQA monitoring activities and results of CQA field testing during construction;
- results of laboratory permeability testing of Shelby-tube samples;
- results of standard Proctor compaction testing on bulk samples from each test pad;
- procedures, analysis, and results for post-construction SDRI and laboratory testing;
- analysis and interpretation of field and laboratory test results; and
- recommendations for compacted clay construction in the OSDF, including recommendations for the relevant sections of the OSDF specifications.

With the respect to construction recommendations, the TPPFR will provide specification requirements from material types and processing, and construction

equipment types and procedures, to produce a compacted clay liner and cap satisfying the performance criterion of OAC 3745-27-08(C)(1). These requirements will address, at a minimum, clay material:

- index properties and characteristics;
- moisture conditioning;
- compaction moisture content and dry density;
- discing, raking, or transverse rotary mixing; and
- compaction equipment type and number of passes.

With respect to construction recommendations, the TPPFR will provide specification requirements for material types and processing, and construction equipment types and procedures, to produce a compacted clay liner and cap satisfying the performance criterion of OAC 3745-27-08(C)(1). These requirements will address, at a minimum, clay material:

- index properties and characteristics;
- moisture conditioning;
- compaction moisture content and dry density;
- discing, raking, or transverse rotary mixing; and
- compaction equipment type and number of passes.

Documentation of CQA monitoring activities, results of field tests during construction, and results of CQA laboratory tests will be included in appendices to the final report.

Data from the SDRI tests and an interpretation of the data including calculations of field hydraulic conductivity will also be presented in appendices to the final report.

12. SCHEDULE

The test pad program must be conducted such that the results can be incorporated into the OSDF final design package prior to 19 September 1996. To accomplish this, the pre-construction laboratory testing will be initiated in February 1996. Construction of the test pads will be accomplished in early to mid May 1996, and SDRI monitoring will occur from mid-May to mid-July 1996. If the contingency SDRI tests (i.e., on Lane 3 of either test pad) are required, the SDRI monitoring phase will continue until mid-August 1996. Decommissioning the SDRI tests, final (post-construction) laboratory tests, and final reporting will require approximately 30 days after the SDRI tests are complete. The TPPFR will be submitted by the end of August 1996 regardless of whether the contingency SDRI testing is performed.

A schedule of primary tasks for the test pad program is presented in Figure 12-1.

SCHEDULE OF TEST PAD PROGRAM

ID	Task Name	Duration	Start	Finish
1	SAMPLING FOR PRECONSTRUCTION LAB TESTING	2d	Fri 2/2/96	Sat 2/3/96
2	PRECONSTRUCTION LAB TESTING PROGRAM	53d	Mon 2/12/96	Fri 4/12/96
3	CONTRACTOR MOBILIZATION	2d	Tue 4/30/96	Wed 5/1/96
4	PRECONSTRUCTION MEETING	1d	Thu 5/2/96	Thu 5/2/96
5	SITE AND SUBGRADE PREPARATION	2d	Thu 5/2/96	Fri 5/3/96
6	EVALUATE SOIL PROCESSING METHODS	2d	Fri 5/3/96	Sat 5/4/96
7	TEST PAD #1 CONSTRUCTION	5d	Mon 5/6/96	Fri 5/10/96
8	TEST PAD #2 CONSTRUCTION	3d	Mon 5/13/96	Wed 5/15/96
9	SDRI #1.1 INSTALLATION	3d	Mon 5/13/96	Wed 5/15/96
10	SDRI #1.2 INSTALLATION	2d	Wed 5/15/96	Thu 5/16/96
11	SDRI #2.1 INSTALLATION	2d	Thu 5/16/96	Fri 5/17/96
12	SDRI #2.2 INSTALLATION	2d	Fri 5/17/96	Sat 5/18/96
13	SDRI MONITORING	52d	Wed 5/15/96	Sat 7/13/96
14	CONTINGENCY SDRI #1.3 INSTALLATION	3d	Mon 6/10/96	Wed 6/12/96
15	CONTINGENCY SDRI #2.3 INSTALLATION	3d	Wed 6/12/96	Fri 6/14/96
16	CONTINGENCY SDRI MONITORING	52d	Thu 6/13/96	Mon 8/12/96
17	SDRI DECOMMISSIONING AND TESTING (NO CONTINGENCY SDRIs)	10d	Mon 7/15/96	Thu 7/25/96
18	FINAL REPORT (NO CONTINGENCY SDRIs)	21d	Mon 7/15/96	Wed 8/7/96
19	SITE CLEANUP (NO CONTINGENCY SDRIs)	7d	Wed 7/17/96	Wed 7/24/96
20	CONTINGENCY SDRI DECOMMISSIONING AND TESTING	10d	Mon 8/5/96	Thu 8/15/96
21	FINAL REPORT (WITH CONTINGENCY SDRIs)	21d	Mon 8/5/96	Wed 8/28/96
22	SITE CLEANUP (WITH CONTINGENCY SDRIs)	7d	Wed 8/14/96	Wed 8/21/96

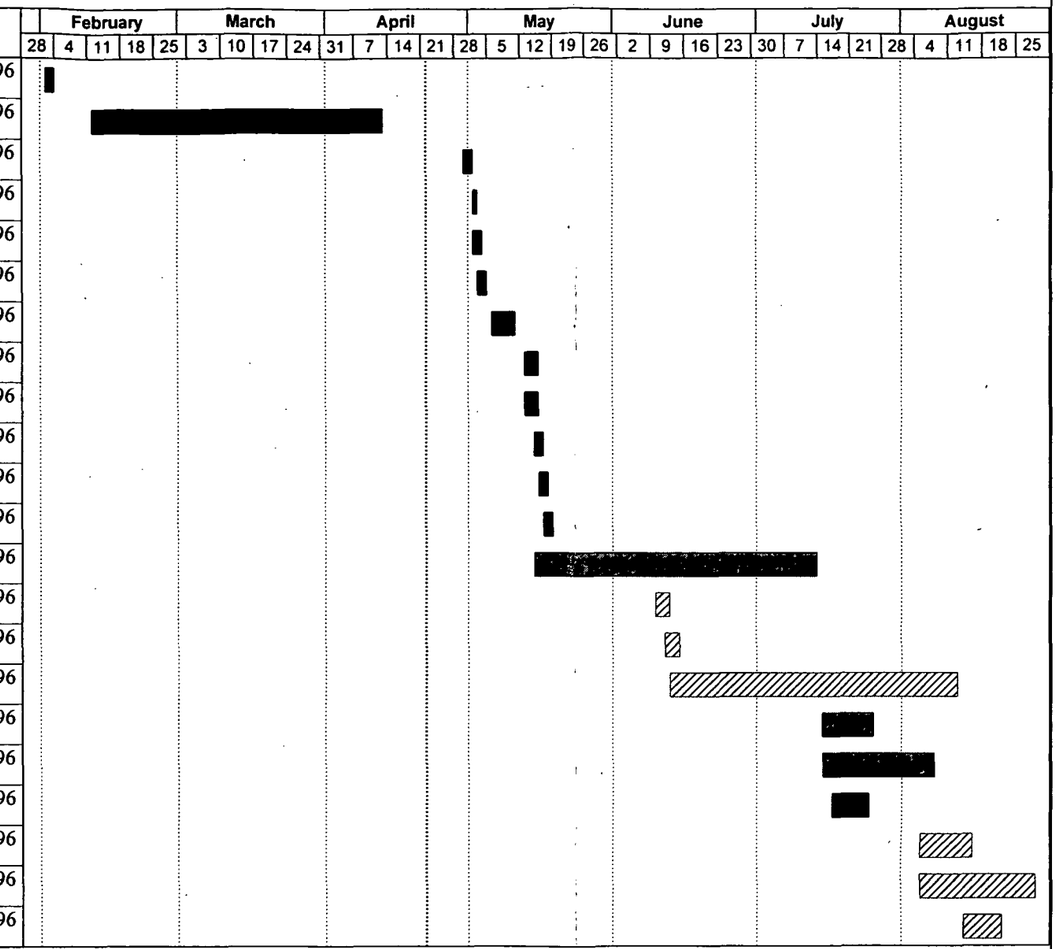

Project: FERNALD OSDF
Date: Mon 4/22/96

Task | Progress | Milestone | Summary | Rolled Up Task | Rolled Up Progress | Rolled Up Milestone

000090

GEOSYNTEC CONSULTANTS
NORCROSS, GEORGIA

PROJECT NO.	GE3900	FIGURE NO.	12-1
DOCUMENT NO.		FILE NO.	DF

327696

REFERENCES

Benson, C.H., Hardinato, F.S., and Motan, E.S., "Representative Specimen Size for Hydraulic Conductivity Assessment of Compacted Soil Liners", *in Hydraulic Conductivity and Waste Containment Transport in Soils*, D.E. Daniel and S.J. Trautwein Eds., ASTM STP 1142, 1994, pp. 3-29.

Daniel, D.E., "In-Situ Hydraulic Conductivity Tests for Compacted Clay", *ASCE Journal of Geotechnical Engineering*, Vol. 115, No. 9, 1989, pp. 1205-1226.

Daniel, D.E., "Summary Review of Construction Quality Control for Compacted Soil Liners", *Waste Containment Systems: Construction Regulation, and Performance*, ASCE Geotechnical Special Publication No. 26, November 1990, pp. 175-189.

GeoSyntec, "*Design Criteria Package, On-Site Disposal Facility, CERCLA/RCRA Unit 2 Fernald Environmental Management Project*", Revision 0, GeoSyntec Consultants, Atlanta, GA, October, 1995.

Othman, M.A. and Luettich, S.M., "Compaction Control Criteria for Clay Hydraulic Barriers", *Proceedings of 73rd Annual Meeting of the Transportation Research Board: Symposium on Compacting Difficult Soils*, Washington, D.C., 1994.

Parsons, "*On-Site Disposal Cell Pre-Design Activities Engineering Report*", Operable Unit 1, Project Order 101, Revision 0, Parsons, Fairfield, OH, April 1994.

Parsons, "*Disposal Facility Pre-Design Geotechnical Investigation Soil Investigation Data Report Summary Document*", Operable Unit 2, Project Order 132, Revision 0, Parsons, Fairfield, OH, July 1995a.

Parsons, *Geotechnical Investigation Report On-Site Disposal Facility*", Operable Unit 2, Project Order 140, 90 Percent, Revision A, Parsons, Fairfield, OH, September 1995b.

Trautwein, S.J. and Williams, C.E., "Performance Evaluation of Earthen Liners", in *Waste Containment Systems: Construction, Regulation, and Performance*, R. Bonaparte, Ed., ASCE Geotechnical Special Publication No. 26, 1990, pp. 175-189.

Trautwein, S.J. and Boutwell, G.P., "In-Site Hydraulic Conductivity Tests for Compacted Soil Liners and Caps", *in Hydraulic Conductivity and Waste Containment Transport in Soils*, D.E. Daniel and S.J. Trautwein Eds., ASTM STP 1142, 1994, pp. 184-226.

U.S. Department of Energy (DOE), "*Final Remedial Investigation Report for Operable Unit 2*", Fernald Environmental Management Project, DOE Field Office, Fernald, OH, 1995a.

U.S. Department of Energy (DOE), "*Final Feasibility Study Report for Operable Unit 2*", Fernald Environmental Management Project, DOE, Fernald Field Office, Fernald, OH, 1995b.

U.S. Department of Energy (DOE), "*Final Record of Decision for Remedial Actions at Operable Unit 2*", Fernald Environmental Management Project, DOE Fernald Field Office, Fernald, OH, 1995c.

U.S. Department of Energy (DOE), "*Draft Remedial Design Work Plan for Remedial Actions at Operable Unit 2*", Fernald Environmental Management Project, DOE Fernald Field Office, Fernald, OH, 1995d.

USEPA, "*Seminar Publication, Design and Construction of RCRA/CERCLA Final Covers*", EPA/625/4-91/025, United States Environmental Protection Agency, May 1991.

USEPA, "*Quality Assurance and Quality Control for Waste Containment Facilities*", EPA/600/R-93/182, U.S. Environmental Protection Agency, September 1993.

APPENDIX A

ALTERNATIVE TO OAC PRESCRIPTIVE SPECIFICATIONS FOR COMPACTED SOIL LINERS

ALTERNATIVE TO OAC PRESCRIPTIVE SPECIFICATIONS FOR COMPACTED SOIL LINERS

BACKGROUND

The on-site disposal facility (OSDF) at the Fernald Environmental Management Project (FEMP) will include compacted brown and gray clays in the liner and cap system. The source of the clays will be the OSDF excavation area and the East Field borrow area (DOE 1995a, Figure 1-2 [attached]). Preliminary laboratory testing conducted on the soil from these two areas indicates that all of the prescriptive material specifications for compacted clay layers set forth in Ohio Administrative Code (OAC) 3745-27-08(C)(1), except one, will be met by the brown and gray clays. The one exception is the criterion cited in OAC 3745-27-08(C)(1)(c)(iv), which requires that the soil contain *"not less than 25% of the particles, by weight, having a maximum dimension not greater than 0.002 mm"* (i.e., 2 microns). Based on the available laboratory test results (DOE 1995b, Figures 4-1 through 4-3 [attached]), the brown and gray clays do not consistently have more than 25 percent of its particles, by weight, smaller than 0.002 mm.

OAC 3745-27-08(C) states that alternatives to the prescriptive requirements for soil liner materials may be used: *"...if it is demonstrated to the satisfaction of the Director (OEPA) that the materials and techniques will result in each lift having a maximum permeability of 1 x 10^{-7} cm/s."* The available test data demonstrate that the remolded brown clay is capable of achieving a hydraulic conductivity less than 1 x 10^{-7} cm/s. Remolded hydraulic conductivities of the gray clays are being performed as part of the ongoing geotechnical investigation for the on-site clay borrow area (DOE 1995a). Additional permeability testing is also being performed on the brown clays in the borrow area as part of this investigation.

SUPPORT FOR MEETING ALTERNATIVES TO PRESCRIPTIVE REQUIREMENTS

The primary considerations in addressing the OAC prescriptive specification for the minimum acceptable percentage, by weight, of particles finer than 0.002 mm are given below:

- The primary performance criterion for compacted soil liners in OAC 3745-27-08(C)(1)(a) requires that each lift of the liner have a maximum hydraulic conductivity of 1 x 10^{-7} cm/s. The hydraulic conductivity of a clayey soil is, in

part, a function of the percentage of clay-size particles. However, other factors such as soil plasticity, compaction moisture content, and dry density also strongly influence hydraulic conductivity. Benson et al. (1994) performed detailed analyses of how each of these parameters correlates with hydraulic conductivity. The results of their study, which were based on data from 67 landfills, indicate that an average (rather than a minimum) fraction of clay-sized particles exceeding 15 percent is an acceptable criterion for compacted soil liners. In addition, Benson et al (1994) provided data on a large number of compacted soil liners which do not meet the clay-size particle criterion set forth in OAC 3745-27-08(C)(1)(c)(iv), yet, when constructed using appropriate procedures, have measured hydraulic conductivities less than 1×10^{-7} cm/s. It is also noted that widely-accepted guidelines for clay liner materials (Daniel 1993) do not contain criteria for the minimum acceptable percentage of clay-size particles.

- As part of the OSDF design, a test pad program will be conducted using soil obtained from the OSDF excavation area and East Field borrow area. Test pads will be constructed using equipment and techniques that will subsequently be used to construct the OSDF clay liner. Laboratory and field permeability testing will be performed during the test pad program to define the compaction conditions that will yield a soil liner with a hydraulic conductivity not greater than 1×10^{-7} cm/s. The test pad program will meet the requirements for test pads set forth in OAC 3745-27-08(C)(1)(m).

- The results of the test pad program, including all laboratory and field hydraulic conductivity test results from the program, will be presented in a report that DOE will provide to OEPA and USEPA. This report will specify construction equipment types and construction procedures that result in a compacted clay liner satisfying the hydraulic conductivity performance criterion of OAC 3745-27-08(C)(1).

- During construction of the OSDF liner system, a detailed construction quality assurance (CQA) program will be implemented. The CQA activities will include moisture/density testing of soil liner materials at the frequency required by OAC 3745-27-08(C)(1)(o) to verify that the compaction conditions are consistent with those established during the test pad program. In so doing, a high level

of assurance will be provided that the hydraulic conductivity of the soil liner material is not greater than 1×10^{-7} cm/s. The CQA program will also include confirmatory hydraulic conductivity testing.

CONCLUSION

The information that will be generated from the activities described above provides a sound basis for obtaining a compacted brown and gray clay liner that satisfies the performance criterion of OAC 3745-27-08(C)(1). DOE proposes to use this information as a basis for discussion with OEPA as to whether the proposed activities (including presentation of test pad test results and construction procedure requirements in the soil liner test pad report) form an acceptable basis for making the demonstration to the OEPA as allowed by OAC 3745-27-08(C). Also note that the OAC prescriptive specification for the minimum acceptable percentage of clay size particles applies to the compacted clay component of the final cover system. Thus, the scope of the test pad demonstration described above will be made broad enough to address the suitability of using the brown and gray clays in the final cover for clay cap construction.

REFERENCES

Benson, C.H., Zhai, H., and Wang, X, "Establishing Hydraulic Conductivity of Compacted Clay Liners," *ASCE Journal of Geotechnical Engineering*, Vol. 120, No. 2, Feb 1994, p. 366 to 387.

Daniel, D.E., *Geotechnical Practice for Waste Disposal*, Chapman and Hall, 1993, 683 pp.

U.S. Department of Energy, July 1995a, "Draft Geotechnical Sampling and Testing Plan for On-Site Clay Borrow Areas, Off-Site Material Sources and Operable Unit 2 Waste Units," Revision 1, DOE Fernald Area Office.

U.S. Department of Energy, July 1995b, "Disposal Facility Predesign Geotechnical Investigation," prepared by Parsons (PO 132), DOE Fernald Area Office.

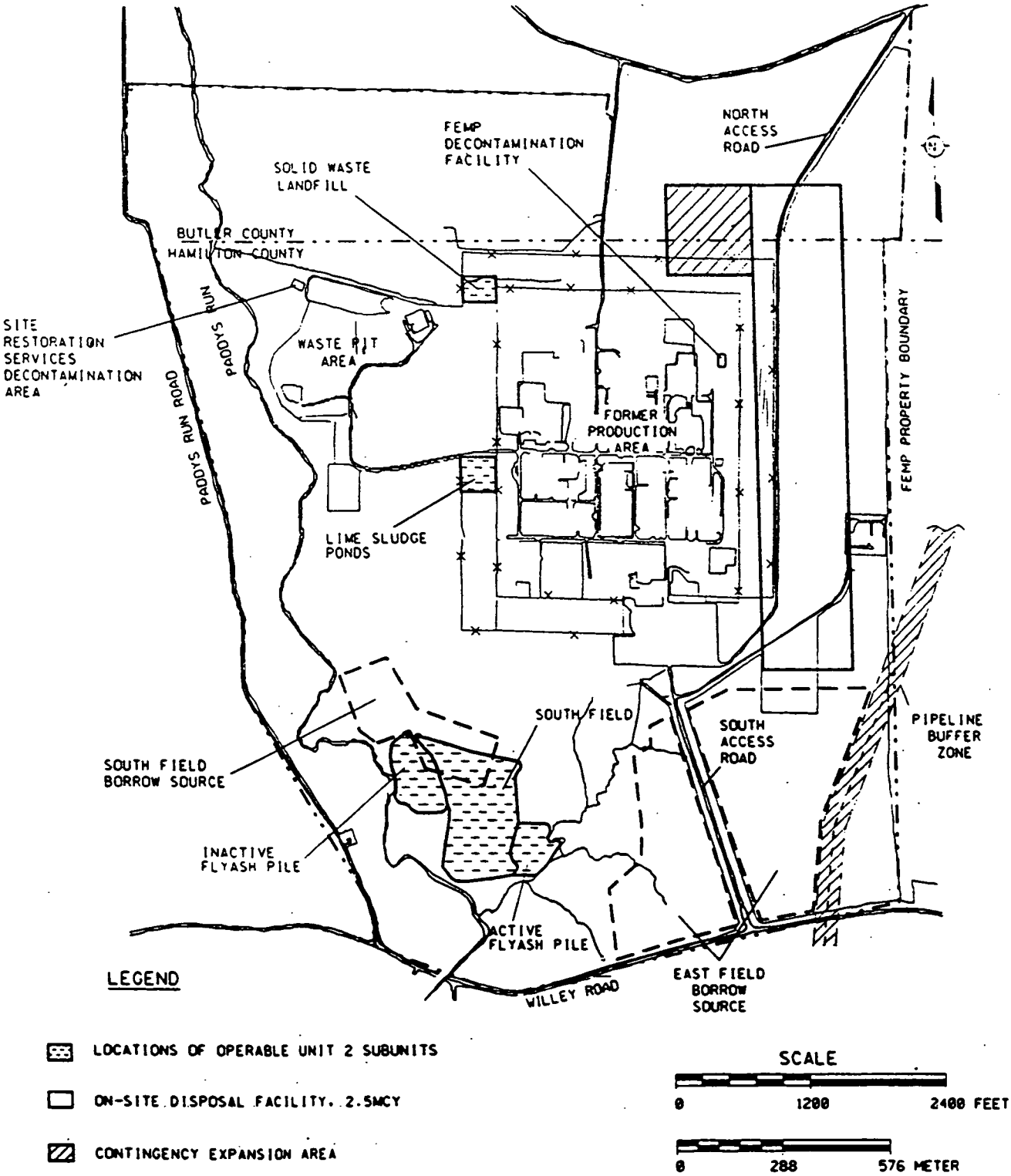

FIGURE 1-2
LOCATION OF ON-SITE DISPOSAL FACILITY, BORROW AREAS, AND OU2 SUBUNITS

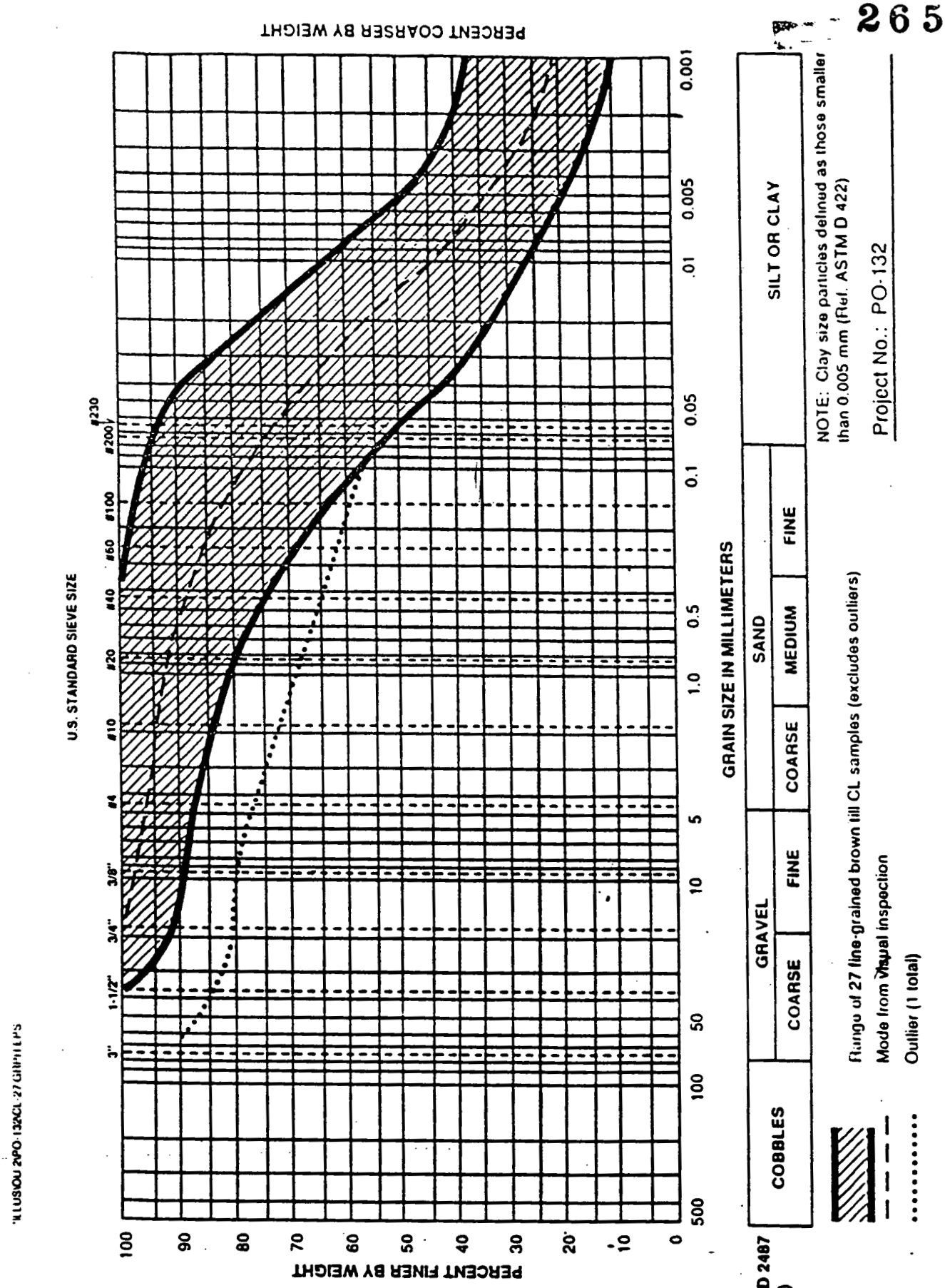

Figure 4-1 - Grain-size Distribution, Fine-grained Brown Till CL Samples

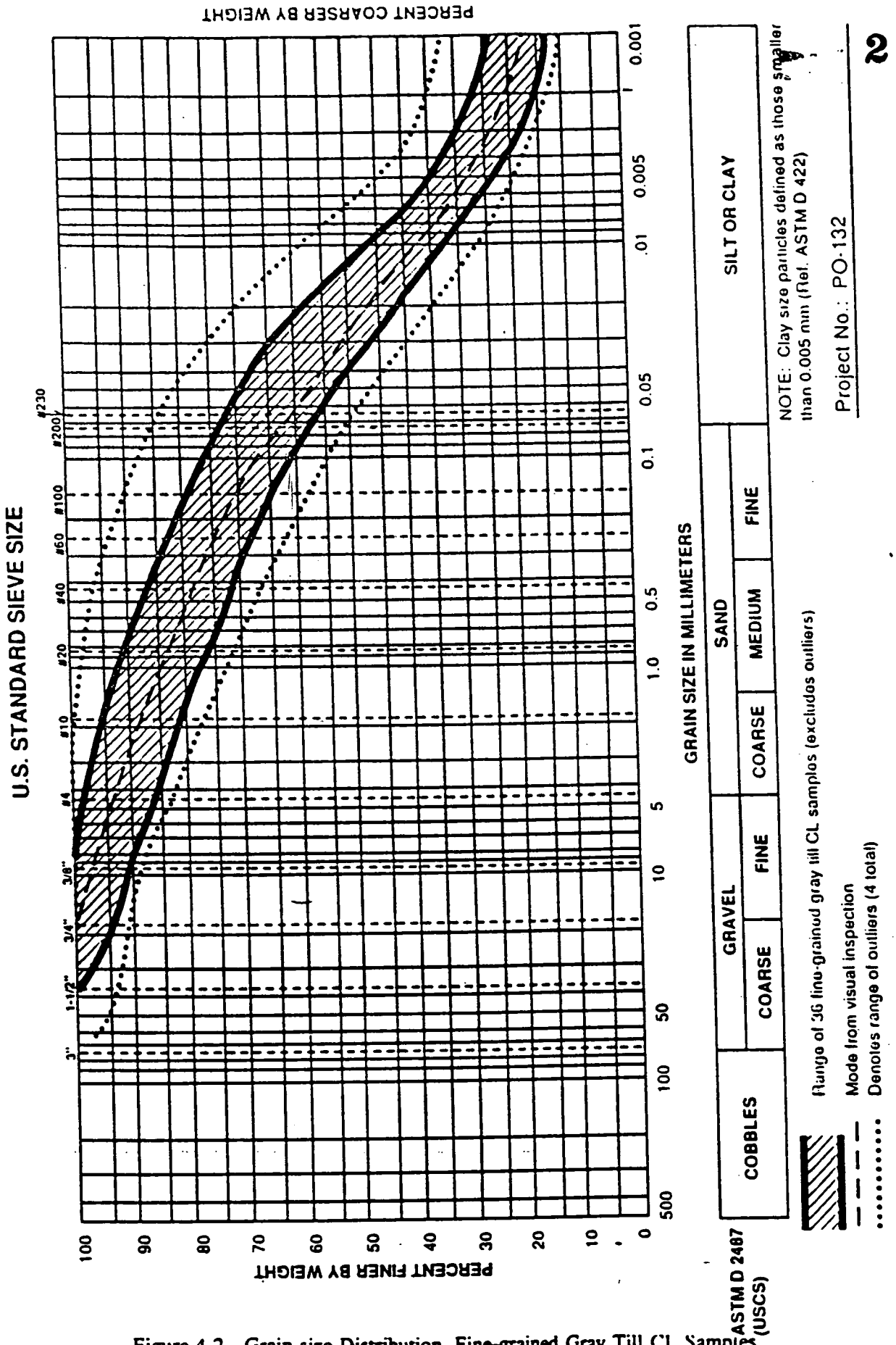

Figure 4-2 - Grain-size Distribution, Fine-grained Gray Till CL Samples

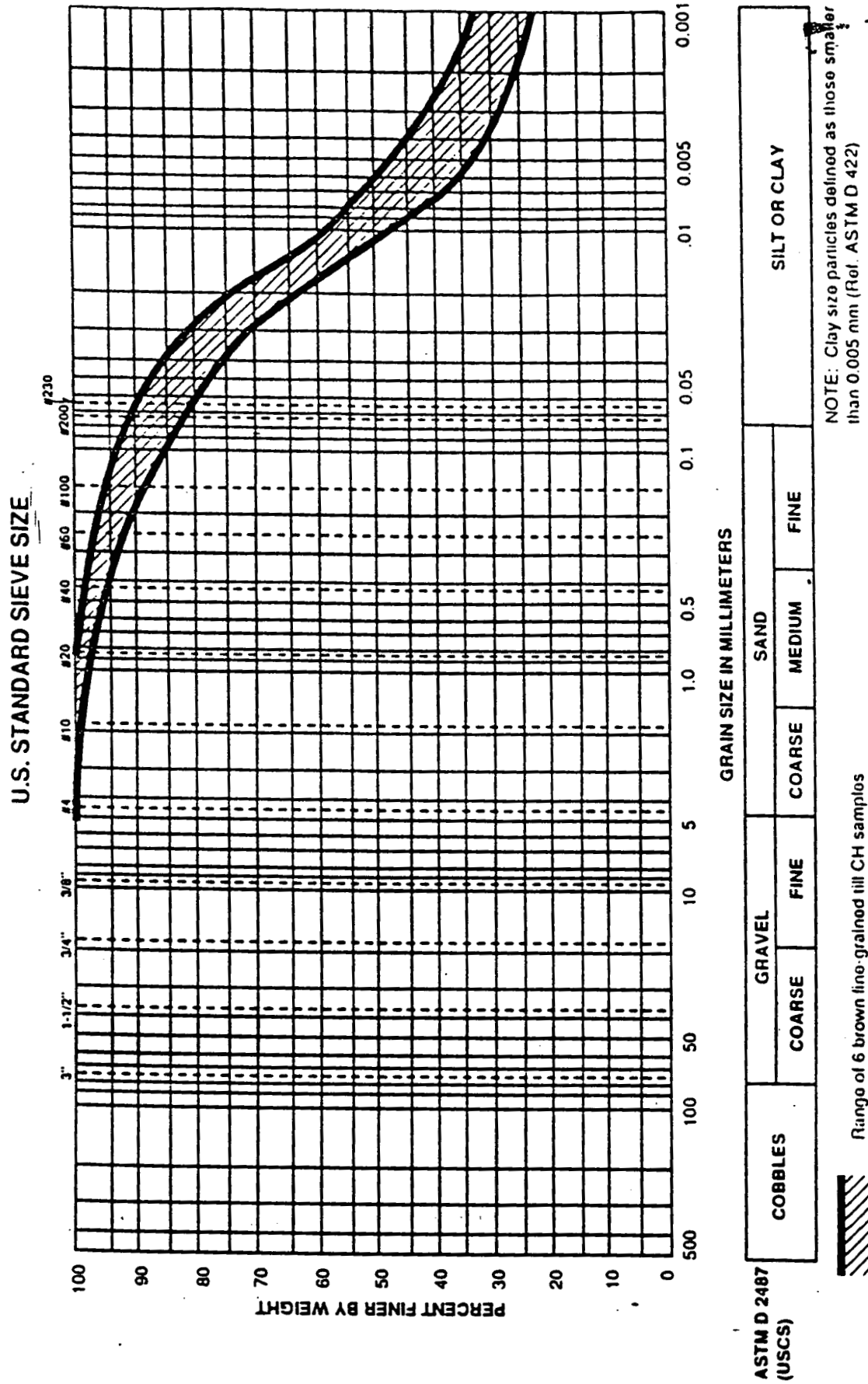

NOTE: Clay size particles defined as those smaller than 0.005 mm (Ref. ASTM D 422)

Project No.: PO-132

Figure 4-3 - Grain-size Distribution, Fine-grained Brown Till CH Samples

APPENDIX B

SELECT ASTM STANDARDS

APPENDIX B

LIST OF ASTM STANDARDS CITED IN TPWP

ASTM D 422	*Method for Particle-Size Analysis of Soils*
ASTM D 698	*Test Method for Laboratory Compaction Characteristics of Soil Using Standard Effort (12,400 ft-lbf/ft^3 (600 kN-m/m^3))*
ASTM D 1556	*Standard Test Method for Density and Unit Weight of Soil In-Place by the Sand-Cone Method*
ASTM D 1557	*Test Method for Laboratory Compaction Characteristics of Soil Using Modified Effort (56,000 Ft-lbf/ft^3 (2,700 kN-m/m^3))*
ASTM D 2216	*Test Method for Laboratory Determination of Water (Moisture) Content of Soil and Rock*
ASTM D 2487	*Test Method for Classification of Soils for Engineering Purposes*
ASTM D 2922	*Test Methods for Density of Soil and Soil-Aggregate In Place by Nuclear Methods (Shallow Depth)*
ASTM D 3017	*Test Method for Water Content of Soil and Rock In Place by Nuclear Methods (Shallow Depth)*
ASTM D 4318	*Test Method for Liquid Limit, Plastic Limit, and Plasticity Index of Soils*
*ASTM D 5084	*Test Method for Measurement of Hydraulic Conductivity of Saturated Porous Materials Using a Flexible Wall Permeameter*
*ASTM D 5093	*Test Method for Field Measurement of Infiltration Rate Using a Double-Ring Infiltrometer With a Sealed Inner Ring*

***Note:** Full standard included in this appendix.

Standard Test Method for Measurement of Hydraulic Conductivity of Saturated Porous Materials Using a Flexible Wall Permeameter[1]

This standard is issued under the fixed designation D 5084; the number immediately following the designation indicates the year of original adoption or, in the case of revision, the year of last revision. A number in parentheses indicates the year of last reapproval. A superscript epsilon (ε) indicates an editorial change since the last revision or reapproval.

1. Scope

1.1 This test method covers laboratory measurement of the hydraulic conductivity (also referred to as *coefficient of permeability*) of water-saturated porous materials with a flexible wall permeameter.

1.2 This test method may be utilized with undisturbed or compacted specimens that have a hydraulic conductivity less than or equal to 1×10^{-5} m/s (1×10^{-3} cm/s).

1.3 The hydraulic conductivity of materials with hydraulic conductivities greater than 1×10^{-5} m/s may be determined by Test Method D 2434.

1.4 The values stated in SI units are to be regarded as the standard, unless other units are specifically given. By tradition in U.S. practice, hydraulic conductivity is reported in centimetres per second, although the common SI units for hydraulic conductivity are metres per second.

1.5 *This standard does not purport to address the safety problems associated with its use. It is the responsibility of the user of this standard to establish appropriate safety and health practices and determine the applicability of regulatory limitations prior to use.*

2. Referenced Documents

2.1 *ASTM Standards:*

D 653 Terminology Relating to Soil, Rock, and Contained Fluids[2]

D 698 Test Methods for Moisture-Density Relations of Soils and Soil-Aggregate Mixtures Using 5.5-lb (2.49-kg) Rammer and 12-in. (305-mm) Drop[2]

D 1557 Test Methods for Moisture-Density Relations of Soils and Soil-Aggregate Mixtures Using 10-lb (4.54-kg) Rammer and 18-in. (457-mm) Drop[2]

D 1587 Practice of Thin-Walled Tube Sampling of Soils[2]

D 2113 Practice for Diamond Core Drilling for Site Investigation[2]

D 2216 Method for Laboratory Determination of Water (Moisture) Content in Soil, Rock, and Soil-Aggregate Mixtures[2]

D 2434 Test Method for Permeability of Granular Soils (Constant Head)[2]

D 4220 Practices for Preserving and Transporting Soil Samples[2]

D 4753 Specification for Evaluating, Selecting and Specifying Balances and Scales for Use in Soil and Rock Testing[2]

D 4767 Test Method for Consolidated-Undrained Triaxial Compression[2]

E 145 Specification for Gravity-Convection and Forced-Ventilation Ovens[3]

3. Terminology

3.1 *Definitions:*

3.1.1 *hydraulic conductivity, k*—the rate of discharge of water under laminar flow conditions through a unit cross-sectional area of a porous medium under a unit hydraulic gradient and standard temperature conditions (20°C).

DISCUSSION—The term *coefficient of permeability* is often used instead of *hydraulic conductivity*, but *hydraulic conductivity* is used exclusively in this test method. A more complete discussion of the terminology associated with Darcy's law is given in the literature.[4]

3.1.2 *pore volume of flow*—the cumulative quantity of flow into a test specimen divided by the volume of voids in the specimen.

3.1.3 For definitions of other terms used in this test method, see Terminology D 653.

4. Significance and Use

4.1 This test method applies to one-dimensional, laminar flow of water within porous materials such as soil and rock.

4.2 The hydraulic conductivity of porous materials generally decreases with an increasing amount of air in the pores of the material. This test method applies to water-saturated porous materials containing virtually no air.

4.3 This test method applies to permeation of porous materials with water. Permeation with other liquids, such as chemical wastes, can be accomplished using procedures similar to those described in this test method. However, this test method is only intended to be used when water is the permeant liquid.

4.4 It is assumed that Darcy's law is valid and that the hydraulic conductivity is essentially unaffected by hydraulic gradient. The validity of Darcy's law may be evaluated by measuring the hydraulic conductivity of the specimen at three hydraulic gradients; if all measured values are similar (within about 25 %), then Darcy's law may be taken as valid. However, when the hydraulic gradient acting on a test

[1] This test method is under the jurisdiction of ASTM Committee D-18 on Soil and Rock and is the direct responsibility of Subcommittee D18.04 on Hydrologic Properties of Soil and Rocks.

Current edition approved June 29, 1990. Published October 1990.

[2] *Annual Book of ASTM Standards*, Vol 04.08.

[3] *Annual Book of ASTM Standards*, Vol 04.02.

[4] Olson, R. E., and Daniel, D. E., "Measurement of the Hydraulic Conductivity of Fine-Grained Soils," *Symposium on Permeability and Groundwater Contaminant Transport, ASTM STP 746*, ASTM, 1981, pp. 18–64.

specimen is changed, the state of stress will also change, and, if the specimen is compressible, the volume of the specimen will change. Thus, some change in hydraulic conductivity may occur when the hydraulic gradient is altered, even in cases where Darcy's law is valid.

4.5 This test method provides a means for determining hydraulic conductivity at a controlled level of effective stress. Hydraulic conductivity varies with varying void ratio, which in turn changes when the effective stress changes. If the void ratio is changed, the hydraulic conductivity of the test specimen will likely change. To determine the relationship between hydraulic conductivity and void ratio, the hydraulic conductivity test would have to be repeated at different effective stresses.

4.6 The correlation between results obtained with this test method and the hydraulic conductivities of in-place field materials has not been fully investigated. Experience has sometimes shown that flow patterns in small test specimens do not necessarily follow the same patterns on large field scales and that hydraulic conductivities measured on small test specimens are not necessarily the same as larger-scale values. Therefore, the results should be applied to field situations with caution and by qualified personnel.

5. Apparatus

5.1 *Hydraulic System*—Constant head (Method A), falling head (Methods B and C), or constant rate of flow (Method D) systems may be utilized provided they meet the criteria outlined as follows:

5.1.1 *Constant Head*—The system must be capable of maintaining constant hydraulic pressures to within ±5 % and shall include means to measure the hydraulic pressures to within the prescribed tolerance. In addition, the head loss across the test specimen must be held constant to within ±5 % and shall be measured with the same accuracy or better. Pressures shall be measured by a pressure gage, electronic pressure transducer, or any other device of suitable accuracy.

5.1.2 *Falling Head*—The system shall allow for measurement of the applied head loss, thus hydraulic gradient, to within 5 % or better at any time. In addition, the ratio of initial head loss divided by final head loss over an interval of time shall be measured such that this computed ratio is accurate to within ±5 %. The head loss shall be measured with a pressure gage, electronic pressure transducer, engineer's scale, graduated pipette, or any other device of suitable accuracy. Falling head tests may be performed with either a constant tailwater elevation (Method B) or a rising tailwater elevation (Method C).

5.1.3 *Constant Rate of Flow*—The system must be capable of maintaining a constant rate of flow through the specimen to within 5 % or better. Flow measurement shall be by calibrated syringe, graduated pipette, or other device of suitable accuracy. The head loss across the specimen shall be measured to an accuracy of 5 % or better using an electronic pressure transducer or other device of suitable accuracy. More information on testing with a constant rate of flow is given in the literature.[5]

5.1.4 *System De-airing*—The hydraulic system shall be designed to facilitate rapid and complete removal of free air bubbles from flow lines.

5.1.5 *Back Pressure System*—The hydraulic system shall have the capability to apply back pressure to the specimen to facilitate saturation. The system shall be capable of maintaining the applied back pressure throughout the duration of hydraulic conductivity measurements. The back pressure system shall be capable of applying, controlling, and measuring the back pressure to 5 % or better of the applied pressure. The back pressure may be provided by a compressed gas supply, a deadweight acting on a piston, or any other method capable of applying and controlling the back pressure to the tolerance prescribed in this paragraph.

NOTE 1—Application of gas pressure directly to a fluid will dissolve gas in the fluid. A variety of techniques are available to minimize dissolution of gas in the back pressure fluid, including separation of gas and liquid phases with a bladder and frequent replacement of the liquid with de-aired water.

5.2 *Flow Measurement System*—Both inflow and outflow volumes shall be measured unless the lack of leakage, continuity of flow, and cessation of consolidation or swelling can be verified by other means. Flow volumes shall be measured by a graduated accumulator, graduated pipette, vertical standpipe in conjunction with an electronic pressure transducer, or other volume-measuring device of suitable accuracy.

5.2.1 *Flow Accuracy*—Required accuracy for the quantity of flow measured over an interval of time is 5 % or better.

5.2.2 *De-airing and Compliance of the System*—The flow-measurement system shall contain a minimum of dead space and be capable of complete and rapid de-airing. Compliance of the system in response to changes in pressure shall be minimized by using a stiff flow measurement system. Rigid tubing, such as metallic or rigid thermoplastic tubing, shall be used.

5.2.3 *Head Losses*—Head losses in the tubes, valves, porous end pieces, and filter paper may lead to error. To guard against such errors, the permeameter shall be assembled with no specimen inside and then the hydraulic system filled. If a constant or falling head test is to be used, the hydraulic pressures or heads that will be used in testing a specimen shall be applied, and the rate of flow measured with an accuracy of 5 % or better. This rate of flow shall be at least ten times greater than the rate of flow that is measured when a specimen is placed inside the permeameter and the same hydraulic pressures or heads are applied. If a constant rate of flow test is to be used, the rate of flow to be used in testing a specimen shall be supplied to the permeameter and the head loss measured. The head loss without a specimen shall be less than 0.1 times the head loss when a specimen is present.

5.3 *Permeameter Cell Pressure System*—The system for pressurizing the permeameter cell shall be capable of applying and controlling the cell pressure to within 5 % of the applied pressure. However, the effective stress on the test specimen (which is the difference between the cell pressure and the pore water pressure) shall be maintained to the desired value with an accuracy of 10 % or better. The device for pressurizing the cell may consist of a reservoir connected to the permeameter cell and partially filled with de-aired

[5] Olson, H. W., Morin, R. H., and Nichols, R. W., "Flow Pump Applications in Triaxial Testing," *Symposium on Advanced Triaxial Testing of Soil and Rock, ASTM STP 977*, ASTM, 1988, pp. 68–81.

water, with the upper part of the reservoir connected to a compressed gas supply or other source of pressure (see Note 2). The gas pressure shall be controlled by a pressure regulator and measured by a pressure gage, electronic pressure transducer, or any other device capable of measuring to the prescribed tolerance. A hydraulic system pressurized by deadweight acting on a piston or any other pressure device capable of applying and controlling the permeameter cell pressure to the tolerance prescribed in this paragraph may be used.

NOTE 2—De-aired water is commonly used for the cell fluid to minimize potential for diffusion of air through the membrane into the specimen. Other fluids, such as oils, which have low gas solubilities are also acceptable, provided they do not react with components of the permeameter. Also, use of a long (approximately 5 to 7 m) tube connecting the pressurized cell liquid to the cell helps to delay the appearance of air in the cell fluid and to reduce the flux of dissolved air into the cell.

5.4 *Permeameter Cell*—An apparatus shall be provided in which the specimen and porous end pieces, enclosed by a membrane sealed to the cap and base, are subjected to controlled fluid pressures. A schematic diagram of a typical cell is shown in Fig. 1.

5.4.1 The permeameter cell may allow for observation of changes in height of the specimen, either by observation through the cell wall using a cathetometer or other instrument, or by monitoring of either a loading piston or an extensometer extending through the top plate of the cell bearing on the top cap and attached to a dial indicator or other measuring device. The piston or extensometer should pass through a bushing and seal incorporated into the top plate and shall be loaded with sufficient force to compensate for the cell pressure acting over the cross-sectional area of the piston where it passes through the seal. If deformations are measured, the deformation indicator shall be a dial indicator or cathetometer graduated to 0.3 mm (0.01 in.) or better and having an adequate travel range. Any other measuring device meeting these requirements is acceptable.

5.4.2 In order to facilitate gas removal, and thus saturation of the hydraulic system, four drainage lines leading to the specimen, two each to the base and top cap, are recommended. The drainage lines shall be controlled by no-volume-change valves, such as ball valves, and shall be designed to minimize dead space in the lines.

5.5 *Top Cap and Base*—An impermeable, rigid top cap and base shall be used to support the specimen and provide for transmission of permeant liquid to and from the specimen. The diameter or width of the top cap and base shall be equal to the diameter or width of the specimen ±5 %. The base shall prevent leakage, lateral motion, or tilting, and the top cap shall be designed to receive the piston or extensometer, if used, such that the piston-to-top cap contact area is concentric with the cap. The surface of the base and top cap that contacts the membrane to form a seal shall be smooth and free of scratches.

5.6 *Flexible Membranes*—The flexible membrane used to encase the specimen shall provide reliable protection against leakage. The membrane shall be carefully inspected prior to use and if any flaws or pinholes are evident, the membrane shall be discarded. To minimize restrain to the specimen, the diameter or width of the unstretched membrane shall be

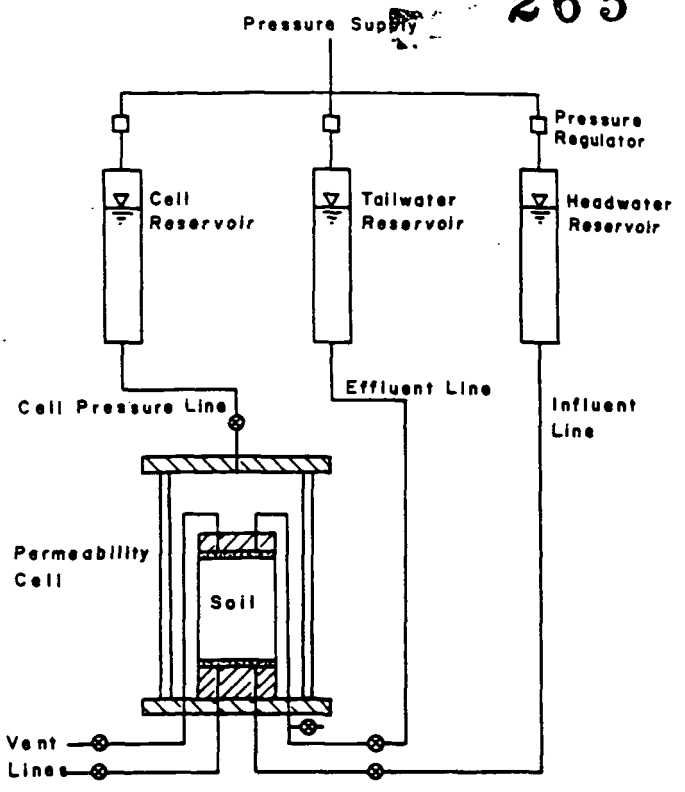

FIG. 1 Permeameter Cell

between 90 and 95 % of that of the specimen. The membrane shall be sealed to the specimen base and cap with rubber O-rings for which the unstressed, inside diameter or width is less than 90 % of the diameter or width of the base and cap, or by any other method that will produce an adequate seal.

NOTE 3—Membranes may be tested for flaws by placing them around a form sealed at both ends with rubber O-rings, subjecting them to a small air pressure on the inside, and then dipping them into water. If air bubbles come up from any point on the membrane, or if any visible flaws are observed, the membrane shall be discarded.

5.7 *Porous End Pieces*—The porous end pieces shall be of silicon carbide, aluminum oxide, or other material that is not attacked by the specimen or permeant liquid. The end pieces shall have plane and smooth surfaces and be free of cracks, chips, and nonuniformities. They shall be checked regularly to ensure that they are not clogged.

5.7.1 The porous end pieces shall be the same diameter or width (±5 %) as the specimen, and the thickness shall be sufficient to prevent breaking.

5.7.2 The hydraulic conductivity of the porous end pieces shall be significantly greater than that of the specimen to be tested. The requirements outlined in 5.2.3 ensure this.

5.8 *Filter Paper*—If necessary to prevent intrusion of material into the pores of the porous end pieces, one or more sheets of filter paper shall be placed between the top and bottom porous end pieces and the specimen. The paper shall have a negligibly small hydraulic impedance. The requirements outlined in 5.2.3 ensure that the impedance is small.

5.9 *Equipment for Compacting a Specimen*—Equipment (including compactor and mold) suitable for the method of compaction specified by the requester shall be used.

5.10 *Sample Extruder*—When the material being tested is a soil core, the soil core shall usually be removed from the sampler with an extruder. The sample extruder shall be capable of extruding the soil core from the sampling tube in the same direction of travel in which the sample entered the tube and with minimum disturbance of the sample. If the soil core is not extruded vertically, care should be taken to avoid bending stresses on the core due to gravity. Conditions at the time of sample extrusion may dictate the direction of removal, but the principal concern is to keep the degree of disturbance minimal.

5.11 *Trimming Equipment*—Specific equipment for trimming the specimen to the desired dimensions will vary depending on quality and characteristics of the sample; however, the following items listed may be used: lathe, wire saw with a wire about 0.3 mm (0.01 in.) in diameter, spatulas, knives, steel rasp for very hard clay specimens, cradle or split mold for trimming specimen ends, and steel straight edge for final trimming of specimen ends.

5.12 *Devices for Measuring the Dimensions of the Specimen*—Devices used to measure the dimensions of the specimen shall be capable of measuring to the nearest 0.3 mm (0.01 in.) or better and shall be constructed such that their use will not disturb the specimen.

5.13 *Balances*—The balance shall be suitable for determining the mass of the specimen and shall be selected as discussed in Specification D 4753. The mass of specimens less than 100 g shall be determined to the nearest 0.01 g. The mass of specimens 100 g or larger shall be determined to the nearest 0.1 g. The mass of specimens >1000 g shall be determined to the nearest 1.0 g.

5.14 *Equipment for Mounting the Specimen*—Equipment for mounting the specimen in the permeameter cell shall include a membrane stretcher or cylinder, and ring for expanding and placing O-rings on the base and top cap to seal the membrane.

5.15 *Vacuum Pump*—To assist with de-airing of permeameter system and saturation of specimens.

5.16 *Temperature Maintaining Device*—The temperature of the permeameter, test specimen, and reservoir of permeant liquid shall not vary more than ±3°C (±5.7°F). Normally, this is accomplished by performing the test in a room with a relatively constant temperature. If such a room is not available, the apparatus shall be placed in a water bath, insulated chamber, or other device that maintains a temperature within the tolerance specified in 5.16. The temperature shall be periodically measured and recorded.

5.17 *Water Content Containers*—The containers shall be in accordance with Method D 2216.

5.18 *Drying Oven*—The oven shall be in accordance with Specification E 145.

6. Reagents

6.1 *Permeant Water:*

6.1.1 The permeant water is the liquid used to permeate the test specimen and is also the liquid used in backpressuring the specimen.

6.1.2 The type of permeant water should be specified by the requestor. If no specification is made, tap water shall be used for the permeant liquid. The type of water utilized shall be indicated in the report.

NOTE 4—Chemical interactions between a permeant liquid and the porous material may lead to variations in hydraulic conductivity. Distilled water can significantly lower the hydraulic conductivity of clayey soils (see the literature).[4] For this reason, distilled water is not usually recommended as a permeant liquid. A permeant liquid used by some is 0.005 N $CaSO_4$, which can be obtained for example, by dissolving 6.8 g of nonhydrated, reagent-grade $CaSO_4$ in 10 L of de-aired, distilled water. This $CaSO_4$ solution is thought to neither increase nor decrease significantly the hydraulic conductivity of clayey soils. In areas with extremely brackish tap water, the $CaSO_4$ solution is recommended.

6.1.3 *Deaired Water*—To aid in removing as much air from the test specimen as possible, deaired water shall be used. The water is usually deaired by boiling, by spraying a fine mist of water into an evacuated vessel attached to a vacuum source, or by forceful agitation of water in a container attached to a vacuum source. If boiling is used, care shall be taken not to evaporate an excessive amount of water, which can lead to a larger salt concentration in the permeant water than desired. To prevent dissolution of air back into the water, deaired water shall not be exposed to air for prolonged periods.

7. Test Specimens

7.1 *Size*—Specimens shall have a minimum diameter of 25 mm (1.0 in.) and a minimum height of 25 mm. The height and diameter of the specimen shall be measured to the nearest 0.3 mm (0.01 in.) or better. The length and diameter shall vary by no more than ±5 %. The surface of the test specimen may be uneven, but indentations must not be so deep that the length or diameter vary by more than ±5 %. The diameter and height of the specimen shall each be at least 6 times greater than the largest particle size within the specimen. If, after completion of a test, it is found based on visual observation that oversized particles are present, that information shall be indicated on the report.

NOTE 5—Most hydraulic conductivity tests are performed on cylindrical test specimens. It is possible to utilize special equipment for testing prismatic test specimens, in which case reference to "diameter" in 7.1 applies to the least width of the prismatic test specimen.

7.2 *Undisturbed Specimens*—Undisturbed test specimens shall be prepared from a representative portion of undisturbed samples secured in accordance with Practice D 1587 or Practice D 2113, and preserved and transported in accordance with requirements for Group C materials in Practice D 4220. Specimens obtained by tube sampling or coring may be tested without trimming except for cutting the end surfaces plane and perpendicular to the longitudinal axis of the specimen, provided soil characteristics are such that no significant disturbance results from sampling. Where the sampling operation has caused disturbance of the soil, the disturbed material shall be trimmed. Where removal of pebbles or crumbling resulting from trimming causes voids on the surface of the specimen that cause the length or diameter to vary by more than ±5 %, the voids shall be filled with remolded material obtained from the trimmings. The ends of the test specimen shall be cut and not troweled (troweling can seal off cracks, slickensides, or other secondary features that might conduct water flow). Specimens shall be trimmed, whenever possible, in an environment where changes in moisture content are minimized. A controlled high-humidity room is usually used for this purpose. The mass and dimensions of the test specimen shall be

determined to the tolerances given in 5.12 and 5.13. The test specimen shall be mounted immediately in the permeameter. The water content of the trimmings shall be determined in accordance with Method D 2216.

7.3 *Laboratory-Compacted Specimens*—The material to be tested shall be prepared and compacted inside a mold in a manner specified by the requestor. If the specimen is placed and compacted in layers, the surface of each previously-compacted layer shall be lightly scarified (roughened) with a fork, ice pick, or other suitable object, unless the requester specifically states that scarification is not to be performed. Test Methods D 698 and D 1557 describe two methods of compaction, but any other method specified by the requestor may be used as long as the method is described in the report. Large clods of material should not be broken down prior to compaction unless it is known that they will be broken in field construction, as well, or the requestor specifically requests that the clod size be reduced. Neither hard clods nor individual particles of the material shall exceed ⅙ of either the height or diameter of the specimen. After compaction, the test specimen shall be removed from the mold, the ends scarified, and the dimensions and weight determined within the tolerances given in 5.12 and 5.13. After the dimensions and mass are determined, the test specimen shall be immediately mounted in the permeameter. The water content of the trimmings shall be determined in accordance with Method D 2216.

7.4 *Other Preparation Methods*—Other methods of preparation of a test specimen are permitted if specifically requested. The method of specimen preparation shall be identified in the report.

7.5 After the height, diameter, mass, and water content of the test specimen have been determined, the dry unit weight shall be calculated. Also, the initial degree of saturation shall be estimated (this information may be used later in the backpressure stage).

8. Procedure

8.1 *Specimen Setup:*

8.1.1 Cut two filter paper sheets to approximately the same shape as the cross section of the test specimen. Soak the two porous end pieces and filter paper sheets, if used, in a container of permeant water.

8.1.2 Place the membrane on the membrane expander. Apply a thin coat of silicon high-vacuum grease to the sides of the end caps. Place one porous end piece on the base and place one filter paper sheet, if used, on the porous end piece, followed by the test specimen. Place the second filter paper sheet, if used, on top of the specimen followed by the second porous end piece and the top cap. Place the membrane around the specimen, and using the membrane expander or other suitable O-ring expander, place one or more O-rings to seal the membrane to the base and one or more additional O-rings to seal the membrane to the top cap.

8.1.3 Attach flow tubing to the top cap, if not already attached, assemble the permeameter cell, and fill it with de-aired water or other cell fluid. Attach the cell pressure reservoir to the permeameter cell line and the hydraulic system to the influent and effluent lines. Fill the cell pressure reservoir with deaired water, or other suitable liquid, and the hydraulic system with deaired permeant water. Apply a small

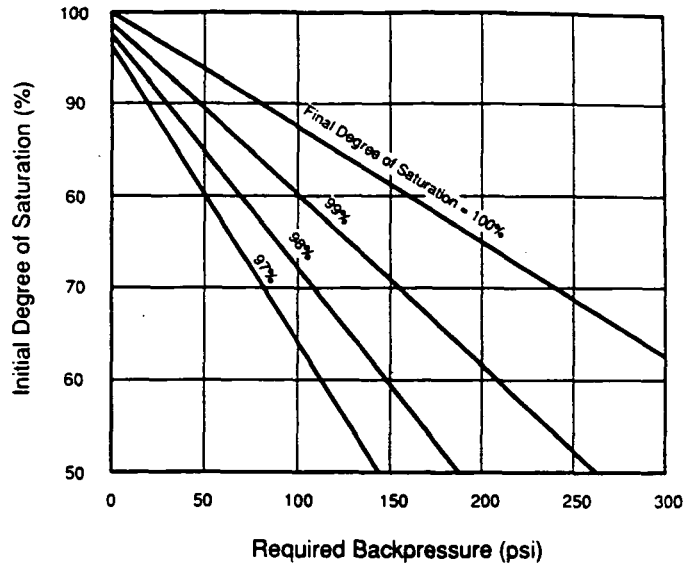

FIG. 2 Back Pressure to Attain Various Degrees of Saturation[6]

confining pressure of 7 to 35 kPa (1 to 5 psi) to the cell and apply a pressure less than the confining pressure to both the influent and effluent systems, and flush permeant water through the flow system. After all visible air has been removed from the flow lines, close the control valves. At no time during saturation of the system and specimen or hydraulic conductivity measurements shall the maximum applied effective stress be allowed to exceed that to which the specimen is to be consolidated.

8.2 *Specimen Soaking (Optional)*—To aid in saturation, specimens may be soaked under partial vacuum applied to the top of the specimen. Atmospheric pressure shall be applied to the specimen base through the influent lines, and the magnitude of the vacuum set to generate a hydraulic gradient across the sample less than that which will be used during hydraulic conductivity measurements.

NOTE 6—Soaking under vacuum is applicable when there are continuous air voids in the specimen. Soaking under vacuum is only recommended for test specimens with initial degrees of saturation below 70 %. The specimen may swell when exposed to water; the effective stress will tend to counteract the swelling. However, for materials that tend to swell, unless the applied effective stress is greater than or equal to the swell pressure, the specimen will swell.

8.3 *Backpressure Saturation*—To saturate the specimen, backpressuring is usually necessary. Figure 2 provides guidance on back pressure required to attain saturation.

NOTE 7—Figure 2 assumes that the water used for back pressure is deaired and that the only source for air to dissolve into the water is air from the test specimen. If air pressure is used to control the back pressure, pressurized air will dissolve into the water, thus reducing the capacity of the water used for back pressure to dissolve air located in the pores of the test specimen. The problem is minimized by using a long (>5 m) tube that is impermeable to air between the air-water interface and test specimen, by separating the back-pressure water from the air by a material or fluid that is relatively impermeable to air, by periodically replacing the back-pressure water with deaired water, or by other means.

[6] Lowe, J., and Johnson, T. C., "Use of Back Pressure to Increase Degree of Saturation of Triaxial Test Specimens," *Proceedings, ASCE Research Conference on Shear Strength of Cohesive Soils*, Boulder, CO, 1960.

8.3.1 Open the flow line valves and flush out of the system any free air bubbles using the procedure outlined in 8.1.3. If an electronic pressure transducer or other measuring device is to be used during the test to measure pore pressures or applied hydraulic gradient, it should be bled of any trapped air. Take and record an initial reading of specimen height, if being monitored.

8.3.2 Adjust the applied confining pressure to the value to be used during saturation of the sample. Apply backpressure by simultaneously increasing the cell pressure and the influent and effluent pressures in increments. The maximum value of an increment in backpressure shall be sufficiently low so that no point in the specimen is exposed to an effective stress in excess of that to which the specimen will be subsequently consolidated. At no time shall a head be applied so that the effective confining stress is <7 kPa (1 psi) because of the danger of separation of the membrane from the test specimen. Maintain each increment of pressure for a period of a few minutes to a few hours, depending upon the characteristics of the specimen. To assist in removal of trapped air, a small hydraulic gradient may be applied across the specimen to induce flow.

8.3.3 Saturation shall be verified with one of the three following techniques:

8.3.3.1 Saturation may be verified by measuring the *B* coefficient as described in Test Method D 4767 (see Note 8). The test specimen shall be considered to be adequately saturated if (*1*) the *B* value is ≥0.95, or (*2*) for relatively incompressible materials, for example, rock, if the *B* value remains unchanged with application of larger values of back pressure. The *B* value may be measured prior to or after completion of the consolidation phase (see 8.4). Accurate *B*-value determination can only be made if no gradient is acting on the specimen and all pore pressure induced by consolidation has dissipated.

NOTE 8—The *B* coefficient is defined for this type of test as the change in pore water pressure in the porous material divided by the change in confining pressure. Compressible materials that are fully saturated with water will have a *B* value of 1.0. Relatively incompressible, saturated materials have *B* values which are somewhat less than 1.0.

8.3.3.2 Saturation of the test specimen may be confirmed at the completion of the test by calculation of the final degree of saturation. The final degree of saturation shall be 100 ± 5 %. However, measurement of the *B* coefficient as described in 8.3.3.1 or use of some other technique (8.3.3.3) is strongly recommended because it is much better to confirm saturation prior to permeation than to wait until after the test to determine if the test was valid.

8.3.3.3 Other means for verifying saturation, such as measurement of the volume change of the specimen when the pore water pressure has been changed, can be used for verifying saturation provided data are available for similar materials to establish that the procedure used confirms saturation as required in 8.3.3.1 or 8.3.3.2.

8.4 *Consolidation*—The specimen shall be consolidated to the effective stress specified by the requestor. Consolidation may be accomplished in stages, if desired.

NOTE 9—The test specimen may be consolidated prior to application of backpressure. Also, the backpressure and consolidation phases may be completed concurrently if backpressures are applied sufficiently slowly to minimize potential for overconsolidation of the specimen.

8.4.1 Record the specimen height, if being monitored, prior to application of consolidation pressure and periodically during consolidation.

8.4.2 Increase the cell pressure to the level necessary to develop the desired effective stress, and begin consolidation. Drainage may be allowed from the base or top of the specimen, or simultaneously from both ends.

8.4.3 (Optional) Record outflow volumes to confirm that primary consolidation has been completed prior to initiation of the hydraulic conductivity test. Alternatively, measurements of the change in height of the test specimen can be used to confirm completion of consolidation.

NOTE 10—The procedure in 8.4.3 is optional because the requirements of 8.5 ensure that the test specimen is adequately consolidated during permeation because if it is not, inflow and outflow volumes will differ significantly. However, for accurate *B*-value determination, completion of consolidation should be confirmed (see 8.3.3.1). It is recommended that outflow volumes or height changes be recorded as a means for verifying the completion of consolidation prior to initialization of permeation. Also, measurements in the change in height of the test specimen, coupled with knowledge of the initial height, provide a means for checking the final height of the specimen.

8.5 *Permeation:*

8.5.1 *Hydraulic Gradient*—When possible, the hydraulic gradient used for hydraulic conductivity measurements should be similar to that expected to occur in the field. In general, hydraulic gradients from <1 to 5 cover most field conditions. However, the use of small hydraulic gradients can lead to very long testing times for materials having low hydraulic conductivity (less than about 1×10^{-6} cm/s). Somewhat-larger hydraulic gradients are usually used in the laboratory to accelerate testing, but excessive gradients must be avoided because high seepage pressures may consolidate the material, material may be washed from the specimen, or fine particles may be washed downstream and plug the effluent end of the test specimen. These effects could increase or decrease hydraulic conductivity. If no gradient is specified by the requestor, the following guidelines may be followed:

Hydraulic Conductivity, cm/s	Recommended Maximum Hydraulic Gradient
1×10^{-3} to 1×10^{-4}	2
1×10^{-4} to 1×10^{-5}	5
1×10^{-5} to 1×10^{-6}	10
1×10^{-6} to 1×10^{-7}	20
less than 1×10^{-7}	30

NOTE 11—Seepage pressures associated with large hydraulic gradients can consolidate soft, compressible specimens and reduce their hydraulic conductivity. It may be necessary to use smaller hydraulic gradients (<10) for such specimens.

8.5.2 *Initialization*—Initiate permeation of the specimen by increasing the influent pressure (see 8.3.2). The effluent pressure shall not be decreased because air bubbles that were dissolved by the specimen water during backpressuring may come out of solution if the pressure is decreased. The back pressure shall be maintained throughout the permeation phase.

8.5.3 *Constant Head Test (Method A)*—Measure and record the required head loss across the test specimen to the tolerances stated in 5.1.1 and 5.2.3. The head loss across the specimen shall be kept constant ±5 %. Measure and record periodically the quantity of inflow as well as the quantity of outflow. Also measure and record any changes in height of the test specimen, if being monitored (see Note 11). Con-

tinue permeation until at least four values of hydraulic conductivity are obtained over an interval of time in which: (*1*) the ratio of outflow to inflow rate is between 0.75 and 1.25, and (*2*) the hydraulic conductivity is steady. The hydraulic conductivity shall be considered steady if four or more consecutive hydraulic conductivity determinations fall within ±25 % of the mean value for $k \geq 1 \times 10^{-10}$ m/s or within ±50 % for $k < 1 \times 10^{-10}$ m/s, and a plot of the hydraulic conductivity versus time shows no significant upward or downward trend.

8.5.4 *Falling-Head Tests (Methods B and C)*—Measure and record the required head loss across the test specimen to the tolerances stated in 5.1.2. For falling-head tests, at no time shall the applied head loss across the specimen be less than 75 % of the initial (maximum) head loss during each individual hydraulic conductivity determination (see Note 12). Periodically measure and record any changes in the height of the specimen, if being monitored. Continue permeation until at least four values of hydraulic conductivity are obtained over an interval of time in which: (*1*) the ratio of outflow to inflow rate is between 0.75 and 1.25, and (*2*) the hydraulic conductivity is steady (see 8.5.3).

NOTE 12—When the water pressure in a test specimen changes and the applied total stress is constant, the effective stress in the test specimen changes, which can cause volume changes that can invalidate the test results. The requirement that the head loss not decrease very much is intended to keep the effective stress from changing too much. For extremely soft, compressible test specimens, even more restrictive criteria might be needed. Also, when the initial and final head losses across the test specimen do not differ by much, great accuracy is needed to comply with the requirement of 5.1.2 that the ratio of initial to final head loss be determined with an accuracy of ±5 % or better. When the initial and final head loss over an interval of time do not differ very much, it may be possible to comply with the requirements for a constant head test (8.5.3) in which the head loss must not differ by more than ±5 % and to treat the test as a constant head test.

8.5.4.1 *Test with Constant Tailwater Level (Method B)*—If the water pressure at the downstream (tailwater) end of the test specimen is kept constant, periodically measure and record either the quantity of inflow or the level of water in the influent standpipe; measure and record the quantity of outflow from the test specimen.

8.5.4.2 *Test with Increasing Tailwater Level (Method C)*—If the water pressure at the downstream end of the test specimen rises during an interval of time, periodically measure and record either the quantity or inflow and outflow or the changes in water levels in the influent and effluent standpipes.

8.5.5 *Constant Rate of Flow Tests (Method D)*—Initiate permeation of the specimen by imposing a constant flow rate. Choose the flow rate so the hydraulic gradient does not exceed the value specified, or if none is specified, the value recommended in 8.5.1. Periodically measure the rate of inflow, the rate of outflow, and head loss across the test specimen to the tolerances given in 5.1.3. Also, measure and record any changes in specimen height, if being monitored. Continue permeation until at least four values of hydraulic conductivity are obtained over an interval of time in which (*1*) the ratio of inflow to outflow rates is between 0.75 and 1.25, and (*2*) hydraulic conductivity is steady (see 8.5.3).

8.6 *Final Dimensions of the Specimen*—After completion of permeation, reduce the applied confining, influent, and effluent pressures in a manner that does not generate significant volume change of the test specimen. Then carefully disassemble the permeater cell and remove the specimen. Measure and record the final height, diameter, and total mass of the specimen. Then determine the final water content of the specimen by the procedure of Method D 2216. Dimensions and mass of the test specimen shall be measured to the tolerances specified in 5.13 and 7.1.

NOTE 13—The specimen may swell after removal of back pressure as a result of air coming out of solution. A correction may be made for this effect, provided that changes in the length of the specimen are monitored during the test. The strain caused by dismantling the cell is computed from the length of the specimen before and after dismantling the cell. The same strain is assumed to have occurred in the diameter. The corrected diameter and actual length before the back pressure was removed are used to compute the volume of the test specimen prior to dismantling the cell. The volume prior to dismantling the cell is used to determine the final dry density and degree of saturation.

9. Calculation

9.1 *Constant Head and Constant Rate of Flow Tests (Methods A and D)*—Calculate the hydraulic conductivity, k, as follows:

$$k = QL/Ath \tag{1}$$

where:
k = hydraulic conductivity, m/s,
Q = quantity of flow, taken as the average of inflow and outflow, m^3,
L = length of specimen along path of flow, m,
A = cross-sectional area of specimen, m^2,
t = interval of time, s, over which the flow Q occurs, and
h = difference in hydraulic head across the specimen, m of water.

9.2 *Falling-Head Tests:*

9.2.1 *Constant Tailwater Pressure (Method B)*—Calculate the hydraulic conductivity, k, as follows:

$$k = \frac{aL}{At} \ln\left(\frac{h_1}{h_2}\right) \tag{2}$$

where:
a = cross-sectional area of the reservoir containing the influent liquid, m^2,
L = length of the specimen, m,
A = cross-sectional area of the specimen, m^2,
t = elapsed time between determination of h_1 and h_2, s,
h_1 = head loss across the specimen at time t_1, m, and
h_2 = head loss across the specimen at time t_2, m.

9.2.2 *Increasing Tailwater Pressure (Method C)*—Calculate the hydraulic conductivity, k, as follows:

$$k = \frac{a_{in}\, a_{out}\, L}{A\, t\, (a_{in} + a_{out})} \ln(h_1/h_2) \tag{3}$$

where:
a_{in} = cross-sectional area of the reservoir containing the influent liquid, m^2,
a_{out} = cross-sectional area of the reservoir containing the effluent liquid, m^2,
L = length of the specimen, m,
A = cross-sectional area of the specimen, m^2,
t = elapsed time between determination of h_1 and h_2, s,
h_1 = head loss across the specimen at time t, m, and
h_2 = head loss across the specimen at time t_2, m.

NOTE 14—For the case in which $a_{out} = a_{in} = a$, the equation for calculating k for a falling head test with a rising tailwater level is:

$$k = \frac{a\,L}{-2\,A\,t} \ln\left(\frac{h_1}{h_2}\right) \quad (4)$$

9.3 Correct the hydraulic conductivity to that for 20°C (68°F), k_{20}, by multiplying k by the ratio of the viscosity of water at test temperature to the viscosity of water at 20°C (68°F), R_T, from Table 1, as follows:

$$k_{20} = R_T k \quad (5)$$

10. Report

10.1 Report the following information:

10.1.1 Sample identifying information,

10.1.2 Any special selection and preparation process, such as removal of stones or other materials, or indication of their presence, if undisturbed specimen,

10.1.3 Descriptive information on method of compaction,

10.1.4 Initial dimensions of the specimen,

10.1.5 Initial water content and dry unit weight of the specimen,

10.1.6 Type of permeant liquid used,

10.1.7 Magnitude of total back pressure,

10.1.8 Maximum and minimum effective consolidation stress,

NOTE 15—The maximum effective stress exists at the effluent end of the test specimen and the minimum stress at the influent end.

10.1.9 Height of specimen after completion of consolidation, if monitored,

10.1.10 Range of hydraulic gradient used,

10.1.11 Final length, diameter, water content, dry unit weight, and degree of saturation of the test specimen,

10.1.12 Average hydraulic conductivity for the last four determinations of hydraulic conductivity (obtained as described in 8.5.3 to 8.5.5), reported with two significant figures, for example, 7.1×10^{-10} m/s, and reported in units of m/s (plus additional units, if requested or customary),

10.1.13 Graph or table of hydraulic conductivity versus time or pore volumes of flow is recommended.

TABLE 1 Correction Factor R_T for Viscosity of Water at Various Temperatures[A]

Temperature, °C	R_T	Temperature, °C	R_T
0	1.783	25	0.889
1	1.723	26	0.869
2	1.664	27	0.850
3	1.611	28	0.832
4	1.560	29	0.814
5	1.511	30	0.797
6	1.465	31	0.780
7	1.421	32	0.764
8	1.379	33	0.749
9	1.339	34	0.733
10	1.301	35	0.719
11	1.265	36	0.705
12	1.230	37	0.692
13	1.197	38	0.678
14	1.165	39	0.665
15	1.135	40	0.653
16	1.106	41	0.641
17	1.077	42	0.629
18	1.051	43	0.618
19	1.025	44	0.607
20	1.000	45	0.598
21	0.976	46	0.585
22	0.953	47	0.575
23	0.931	48	0.565
24	0.910	49	0.556

[A] $R_T = (-0.02452\,T + 1.495)$ where T is the degrees celsius.

11. Precision and Bias

11.1 *Precision*—Data are being evaluated to determine the precision of this test method. In addition, Subcommittee D18.04 on Hydrologic Properties of Soil and Rocks, is seeking pertinent data from users of this test method.

11.2 *Bias*—There is no accepted reference value for this test method, therefore, bias cannot be determined.

12. Keywords

12.1 coefficient of permeability; hydraulic barriers; hydraulic conductivity; liner; permeameter

The American Society for Testing and Materials takes no position respecting the validity of any patent rights asserted in connection with any item mentioned in this standard. Users of this standard are expressly advised that determination of the validity of any such patent rights, and the risk of infringement of such rights, are entirely their own responsibility.

This standard is subject to revision at any time by the responsible technical committee and must be reviewed every five years and if not revised, either reapproved or withdrawn. Your comments are invited either for revision of this standard or for additional standards and should be addressed to ASTM Headquarters. Your comments will receive careful consideration at a meeting of the responsible technical committee, which you may attend. If you feel that your comments have not received a fair hearing you should make your views known to the ASTM Committee on Standards, 1916 Race St., Philadelphia, PA 19103.

Standard Test Method for Field Measurement of Infiltration Rate Using a Double-Ring Infiltrometer with a Sealed-Inner Ring[1]

This standard is issued under the fixed designation D 5093; the number immediately following the designation indicates the year of original adoption or, in the case of revision, the year of last revision. A number in parentheses indicates the year of last reapproval. A superscript epsilon (ε) indicates an editorial change since the last revision or reapproval.

1. Scope

1.1 This test method describes a procedure for measuring the infiltration rate of water through in-place soils using a double-ring infiltrometer with a sealed inner ring.

1.2 This test method is useful for soils with infiltration rates in the range of 1×10^{-7} m/s to 1×10^{-10} m/s. When infiltration rates $\geq 1 \times 10^{-7}$ m/s are to be measured Test Method D 3385 shall be used.

1.3 This test method provides a direct measurement of infiltration rate, not hydraulic conductivity. Although the units of infiltration rate and hydraulic conductivity are similar, there is a distinct difference between these two quantities. They cannot be directly related unless the hydraulic boundary conditions, such as hydraulic gradient and the extent of lateral flow of water are known or can be reliably estimated.

1.4 This test method can be used for natural soil deposits, recompacted soil layers, and amended soils such as soil bentonite and soil lime mixtures.

1.5 The values stated in SI units are to be regarded as standard. The values in parentheses are for information only.

1.6 *This standard does not purport to address the safety problems associated with its use. It is the responsibility of the user of this standard to establish appropriate safety and health practices and determine the applicability of regulatory limitations prior to use.*

2. Referenced Documents

2.1 *ASTM Standards:*

D 653 Terminology Relating to Soil, Rock, and Contained Fluids[2]

D 3385 Test Method for Infiltration Rate of Soils in Field Using Double Ring Infiltrometers[2]

3. Terminology

3.1 *Definitions:*

3.1.1 *infiltration*—downward entry of liquid into a porous body.

3.1.2 *infiltration rate, I*—quantity of liquid entering a porous material (m^3) per unit area (m^2) per unit time (s), expressed in units of m/s.

3.1.3 *infiltrometer*—a device used to pond liquid on a porous body and to allow for the measurement of the rate at which liquid enters the porous body.

3.1.4 For definitions of other terms used in this test method, see Terminology D 653.

4. Summary of Test Method

4.1 The infiltration rate of water through soil is measured using a double-ring infiltrometer with a sealed or covered inner ring (Fig. 1). The infiltrometer consists of an open outer and a sealed inner ring. The rings are embedded and sealed in trenches excavated in the soil. Both rings are filled with water such that the inner ring is submerged.

4.2 The rate of flow is measured by connecting a flexible bag filled with a known weight of water to a port on the inner ring. As water infiltrates into the ground from the inner ring, an equal amount of water flows into the inner ring from the flexible bag. After a known interval of time, the flexible bag is removed and weighed. The weight loss, converted to a volume, is equal to the amount of water that has infiltrated into the ground. An infiltration rate is then determined from this volume of water, the area of the inner ring, and the interval of time. This process is repeated and a plot of infiltration rate versus time is constructed. The test is continued until the infiltration rate becomes steady or until it becomes equal to or less than a specified value.

5. Significance and Use

5.1 This test method provides a means to measure low infiltration rates associated with fine-grained, clayey soils, and are in the range of 1×10^{-7} m/s to 1×10^{-9} m/s.

5.2 This test method is particularly useful for measuring liquid flow through soil moisture barriers such as compacted clay liner or covers used at waste disposal facilities, for canal and reservoir liners, for seepage blankets, and for amended soil liners such as those used for retention ponds or storage tanks.

5.3 The purpose of the sealed inner ring is to: (*1*) provide

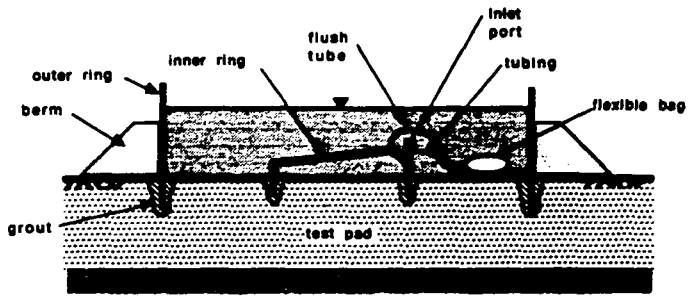

FIG. 1 Schematic Of A Double-Ring Infiltrometer With A Sealed Inner Ring

[1] This test method is under the jurisdiction of ASTM Committee D-18 on Soil and Rock and is the direct responsibility of Subcommittee D18.04 on Hydrologic Properties of Soil and Rocks.

Current edition approved June 29, 1990. Published August 1990.

[2] *Annual Book of ASTM Standards*, Vol 04.08.

a means to measure the actual amount of flow rather than a drop in water elevation which is the flow measurement procedure used in Test Method D 3385 and (*2*) to eliminate evaporation losses.

5.4 The purpose of the outer ring is to promote one-dimensional, vertical flow beneath the inner ring. The use of large diameter rings and large depths of embedments helps to ensure that flow is essentially one-dimensional.

5.5 This test method provides a means to measure infiltration rate over a relatively large area of soil. Tests on large volumes of soil can be more representative than tests on small volumes of soil.

5.6 The data obtained from this test method are most useful when the soil layer being tested has a uniform distribution of pore space, and when the density and degree of saturation and the hydraulic conductivity of the material underlying the soil layer are known.

5.7 Changes in water temperature can introduce significant error in the volume change measurements. Temperature changes will cause water to flow in or out of the inner ring due to expansion or contraction of the inner ring and the water contained within the inner ring.

5.8 The problem of temperature changes can be minimized by insulating the rings, by allowing enough flow to occur so that the amount of flow resulting from a temperature change is not significant compared to that due to infiltration, or by connecting and disconnecting the bag from the inner ring when the water in the inner ring is at the same temperature.

5.9 If the soil being tested will later be subjected to increased overburden stress, then the infiltration rate can be expected to decrease as the overburden stress increases. Laboratory hydraulic conductivity tests are recommended for studies of the influence of level of stress on the hydraulic properties of the soil.

6. Apparatus

6.1 *Infiltrometer Rings*—The rings shall be constructed of a stiff, corrosion-resistant material such as metal, plastic, or fiberglass. The shape of the rings can be circular or square. However, square rings are recommended because it is easier to excavate straight trenches in the soil. The rings can be of any size provided: (*1*) the minimum width or diameter of the inner ring is 610 mm (24 in.); and (*2*) a minimum distance of 610 mm is maintained between the inner and outer ring. The following is a description of a set of rings that can be constructed from commonly available materials, incorporates the requirements described above, and has worked well in the field.

6.1.1 *Outer Ring*—A square ring (Fig. 2) comprised of four sheets of aluminum approximately 3.6 m by 910 mm by 2 mm (12 ft by 36 in. by 0.080 in.) The top edge of the aluminum sheet is bent 90° in order to provide rigidity. A hole is provided in the center of the top edge. One edge of each sheet is bent 90°. Holes are drilled along each side edge so that the sheets can be bolted at the corners. A flat rubber gasket provides a seal at each corner. A wire cable approximately 15 m long with a clamp may be needed to tie the top edges together.

6.1.2 *Inner Ring*—A square ring (Fig. 3), 1.52 m (5 ft) on a side, made of fiberglass provided with two ports. The top is shaped in such a way as to vent air from the ring as it is filled. A port is provided at the highest point so that any air that accumulates in the ring during the test can be flushed out. One port must be located at the top of the ring. The other port must be located beneath the top port. A 150 mm (6 in.) skirt, that is embedded into the soil, is provided along the edge of the ring. Barbed fittings that accept flexible tubing are attached to the ports. Handles are provided at each corner of the inner ring.

6.2 *Flexible Bag*—Two clear flexible bags with a capacity of 1000 to 3000 mL. Intravenous bags available from medical supply stores work well. A means for attaching a

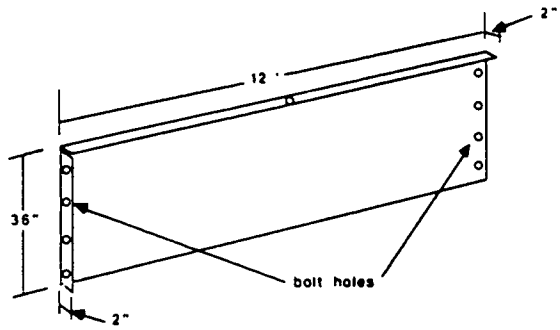

FIG. 2 Panel For Outer Ring

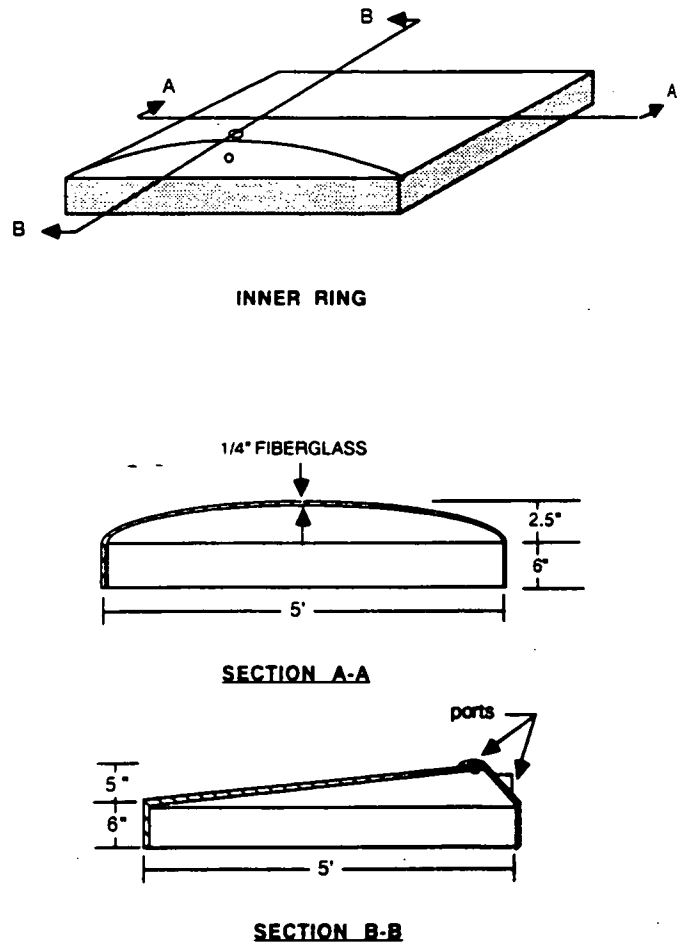

FIG. 3 Inner Ring

shut-off valve to the bag shall be provided. The shut-off valve shall be provided with a barbed fitting that will connect to the inlet tube on the inner ring.

6.3 *Tubing*—Clear, flexible tubing approximately 4.5 m (15 ft) long with a minimum ID of 6 mm (¼ in.)

6.4 *Scissors or Knife.*

6.5 *Excavation Tools.*

6.5.1 *Mason's Hammer*—Hammer with a blade approximately 120 mm long and 40 mm wide.

6.5.2 *Trenching Machine*—Capable of excavating a trench with a maximum width of 150 mm (6 in.) and a depth of 460 mm (18 in.)

6.5.3 *Chain Saw*—(Optional—see Note 1) Equipped with a carbide-tipped chain and bar.

6.5.4 *Hand Shovel*, garden type.

6.6 *Levels*—A surveyor's level and rod and a carpenter's level.

6.7 *Buckets*—Five buckets with a capacity of approximately 20 L (5 gal.)

6.8 *Blocks*—Cinder blocks to serve as a platform for the flexible bag.

6.9 *Cover*—An opaque cover to place on top of the outer ring. The cover can be a tarp or plywood supported by wooden beams.

6.10 *Grout*—A bentonite grout for filling the trenches and sealing the rings in place.

6.11 *Mixing Equipment*—A large (four bag) grout mixer for mixing the bentonite grout.

6.12 *Trowel.*

6.13 *Thermometer*—Readable to 0.5°C with a range of 0 to 50°C.

6.14 *Scale*—Capacity of 4000 g and an accuracy of 1 g.

6.15 *Watch*—Readable to 1 s.

6.16 *Water Supply*—Preferably water of the same quality as that involved in the problem being examined. Approximately 5600 L (1400 gal) are needed for this test.

6.17 *Splash Guard*—Plywood, rubber sheet, or burlap 600 by 600 mm (2 by 2 ft).

7. Test Site

7.1 The test requires an area of approximately 7.3 by 7.3 m (24 by 24 ft).

7.2 The slope to the test area should be no greater than approximately 3 %.

7.3 The test may be set up in a pit if infiltration rates are desired at depth rather than at the surface.

7.4 The test area shall be covered with a sheet of plastic to keep the surface from drying.

7.5 Representative samples of the soil to be tested shall be taken before and after the test to determine its moisture content, density, and specific gravity. The thickness of the layer being tested shall be determined as well as the approximate hydraulic conductivity of the layer beneath it.

8. Procedure

8.1 *Assembly of Outer Ring*—Wipe off gaskets and side edges of the outer ring. Align gasket between the edges and bolt edges together.

8.2 *Excavation of Trenches:*

8.2.1 Place both rings on the area to be tested. Center the inner ring within the outer ring. Make sure that the outer ring is square by using the tape measure to check that the length of the diagonals are equal.

8.2.2 If plastic is covering the test area, cut out thin strips along the edge of each ring so that the trenches can be excavated. Leave as much of the plastic on as possible in order to keep the soil from drying.

8.2.3 Use the bottom edge of each ring to scribe a line on the ground to use as a guide for excavating the trenches.

8.2.4 Note the orientation of the rings and set them aside.

8.2.5 Use the surveyor's level and check the ground elevation where the corners of each ring will be. Note the high spots and excavate deeper in these areas so that the rings will be level.

8.2.6 Use the trenching machine and excavate a trench for the outer ring. The trench should be about 146 mm (18 in.) deep. Excavate deeper at high spots.

8.2.7 Use a small hand shovel to remove any loose material in the trenches.

8.2.8 Place the outer ring in the trench and use the carpenter's level to check that the top of the ring is reasonably level (±30 mm). Also check that the outer ring is square. Remove the ring and excavate any areas keeping the ring from being level and square.

8.2.9 Set the outer ring aside and cover the trenches to prevent the soil from drying.

8.2.10 Use the mason's hammer and excavate a trench 50 by 110 mm (2 by 4.5 in.) for the inner ring. Excavate deeper in high spots so that the inner ring will sit level in the trench. Excavate the trench carefully so that the surrounding soil is disturbed as little as possible. When using the mason's hammer, it is best to start by digging down several inches in one spot and then advancing the trench forward by chopping down on the soil. Do not pry the soil up as this tends to lift up large wedges of soil, opens cracks, and causes the trench to be oversized.

8.2.11 Place the inner ring in the trench to check the fit. Excavate any areas where the ring does not fit. Use a surveyor's level to check the elevation of the corners of the ring. The inner ring needs to be level or slightly tilted so that the back end is slightly lower than the front end.

8.2.12 Set the ring aside and cover the trenches.

NOTE 1—A chain saw that is equipped with a carbide-tipped chain and a bar may be used to excavate the trenches. Use of a chain saw will not only reduce the time needed to excavate the trench but will also greatly decrease the amount of grout needed to fill the trenches. If a chain saw is used, the trenches need only be 25 mm (1 in.) wide. A chain saw will not work well in some soils. A trial trench should be made to determine if it will work.

8.3 *Installation of Rings:*

8.3.1 Use the grout mixer to prepare enough grout to fill the trenches. The hydraulic conductivity of the grout should be less than approximately 1×10^{-8} m/s.

8.3.2 Fill the trenches to within 2.5 mm (1 in.) of the top of the trench. Rod or tamp the grout to remove any entrapped air.

8.3.3 Lift the inner ring and center it over the inner ring trench. Lower it into the trench and slowly push it down. Keep the ring level as it is pushed into place.

8.3.4 Use a surveyor's level to check that the ring is level.

8.3.5 Use a trowel to press the grout against the outside wall of the ring in order to ensure a good seal.

8.3.6 Cover the grout with plastic to prevent desiccation.

8.3.7 Lift the outer ring and center it over the outer ring trench.

8.3.8 Keep the ring level and push it into place.

8.3.9 Use the carpenter's level to make sure that the ring is level.

8.3.10 Use a trowel to push the grout against both the inside and the outside of the ring to ensure a good seal.

8.3.11 Cover the grout with plastic to prevent desiccation.

8.3.12 Place several cinder blocks between the inner and outer rings in the vicinity of the ports on the inner ring. These blocks will be used as a platform to stand on when connecting the fittings to the inner ring and also to support the flexible bags. The blocks should be no higher than 100 mm (4 in.)

8.3.13 Pile soil along the outside of the outer ring to a height of at least 30 cm (12 in.) This soil places an overburden pressure on the grout that will prevent it from being pushed out of the trench when the rings are filled with water.

8.4 *Filling the Rings:*

8.4.1 Fill two buckets with water and place one on each back corner of the inner ring. The buckets are placed on the inner ring to counteract the uplift force that acts on the ring as it is being filled. Make sure that the buckets are placed on the edge of the ring, not in the center as this may overstress the ring and cause it to crack. Do not to spill any water around the inner ring as this will make it difficult to check for leaks in the seal.

8.4.2 Place an empty bucket upside down on the ground near the top port on the inner ring. Place a second bucket on the first bucket. Fill the second bucket with water. Cut a length of the flexible tubing long enough to reach from the top bucket to the top port on the inner ring. Siphon the water from the bucket to the inner ring. Allow the siphoning to continue until the depth of the water in the inner ring is approximately 25 mm (1 in.). Avoid spilling any water around the inner ring during this filling process as this will make it difficult to check for leaks. Any other suitable method for adding the required volume of water to the inner ring may also be used.

8.4.3 Let the water stand in the inner ring for at least 30 min. Check for leaks in the inner ring seal and repair any that are found.

8.4.4 Start filling the outer ring slowly so as not to scour the soil and muddy the water. Direct the water so that it hits a splashboard first. Fill the outer ring until the water level is approximately 100 mm (4 in.) above the top of the inner ring. While the rings are being filled, use a board or shovel handle to gently tap the inner ring to dislodge air bubbles that are trapped inside. Continue tapping on the inner ring until bubbles cease to emerge from the top port.

8.4.6 Remove the buckets from the top of the inner ring.

8.5 *Installation of Fittings and Tubing:*

8.5.1 Wrap the threads of the two barbed fittings with TFE-fluorocarbon tape.

8.5.2 Saturate the fittings and connect them to the inner ring. Screw one of the barbed fittings into the top port and the other barbed fitting into one of the lower ports. Use caution when screwing the fittings into the ports as the threads in fiberglass inner rings can be easily damaged.

8.5.3 Cut two lengths of the clear flexible tubing, one 900-mm (3-ft) piece and one 1800-mm (6-ft) piece.

8.5.4 Saturate the tubing by placing it under water. Be sure to remove all air bubbles.

8.5.5 Connect one end of the 1.8-m (6-ft) piece to the fitting in the top port and seal the other end with a plug fitting. Do not let air into the tube during this process. This tube is the flush tube.

8.5.6 Connect the end of the 900-mm (3-ft) piece to the barbed fitting in the lower port. Prop the open end of this tube on the cinder block platform. Water is being drawn into this tube so be sure not to allow the open end of the tube to float to the surface and draw in air or sink to the bottom and draw in mud. This tube is the inlet tube.

8.6 *Covering the Rings:*

8.6.1 Cover the rings with either a tarp or plywood. The purpose of the cover is to minimize evaporation, minimize temperature changes, and inhibit the growth of algae.

8.6.2 Provide a means in the cover that makes it convenient to access the front of the inner ring to connect and disconnect the measurement bag.

8.7 *Maintaining the Water Level:*

8.7.1 Place a mark indicating the water elevation on the inside wall of the outer ring near the cinder blocks.

8.7.2 Observe the water level within the outer ring during the test and refill the ring to this mark before the water level drops more than 25 mm (1 in.) below the mark. Record the date, time, and the amount of water added.

8.8 *Purging the Inner Ring*—During the test, air may accumulate beneath the inner ring. This air may introduce error in flow measurements and consequently should be purged on a regular basis as follows.

8.8.1 Disconnect bag, if one is present, from end of inlet tube.

8.8.2 Lift the plugged end of the flush tube out of outer ring and below the water level in the outer ring so that water can be siphoned out of inner ring.

8.8.3 Remove plug from end of flush tube. Water and air if present will start to flow out of inner ring. If air completely fills the tube, the syphon will be lost. If this happens, saturate the tube and restart the siphon.

8.8.4 Allow water to flow from end of tube until air ceases to emerge from inner ring. Replace plug in end of flush tube and place tube back into outer ring. Note the approximate volume of purged air. Volume can be determined by multiplying the flow area of the flush tube by the height of the air bubbles which flow out of the tube.

8.8.5 Wait at least 30 min before taking any flow measurements.

8.8.6 Purge the inner ring on a weekly basis until no significant amount of air is found.

8.9 *Measurements:*

8.9.1 Attach the shut-off valve to the flexible bag and fill the bag with water. Remove all air bubbles from the bag. Use water that has been degassed or allow the bag to sit overnight so that the water can degas. If left to sit overnight, remove any air bubbles. Do not overfill the bag so that the water inside is under pressure.

8.9.2 Dry the outside of the bag and record its weight to the nearest gram.

8.9.3 With the shut-off valve closed, attach the bag to the

open end of the inlet tube connected to the inner ring. Be sure not to trap any air bubbles in the inlet tubing or in the valve when attaching the bag. Lay the bag down on the cinder block platform.

8.9.4 Record the time, date, temperature of the water in the outer ring, and the depth of the water in the outer ring, and then carefully open the shut-off valve on the bag. Check that the inlet tube is not pinched and that the bag is arranged in such a manner that water can flow freely from it into the inner ring.

8.9.5 Sometime before the bag empties, close the shut-off valve, disconnect the bag from the inlet tube, and record the date, time, temperature of the water in the outer ring and the depth of the water in the outer ring. Be sure to prop the open end of the inlet hose as pointed out in 8.5.6. Do not leave the bag on long enough to empty as this will create a suction in the inner ring and cause leaks in the grout seal.

8.9.8 Dry the bag and record the weight of it to the nearest gram.

8.9.9 Refill the bag and repeat 8.9.2 through 8.9.8 until the infiltration rate (see Section 9) becomes steady or drops below a predetermined value.

NOTE 2—The reading times are governed primarily by the length of time the bag can remain connected to the inner ring without emptying. This length of time can only be determined through experience. Initially, flow rates will be high and the bag may need to be disconnected after several hours. As the test progresses, the flow rate will slow and the length of time it takes the bag to empty may increase to several days or weeks.

A second important factor that governs when readings should be made is the temperature of the water. In order to minimize the effects of temperature changes on the measured flow rate, the bag should be disconnected from the inner ring when the water is at the same temperature (within ±2°C) as when the bag was connected. More consistent readings are usually obtained if readings are made between 7 am and 9 am.

NOTE 3—It is not necessary to have the bag connected to the inner ring continuously. Flow only needs to be measured over timed intervals so that a plot of infiltration rate versus time can be constructed. The infiltration rate is not influenced by whether or not the bag is connected to the inlet tube. If the flow rate is high, it is more convenient to connect the bag to the inner ring for several hours a day and leave the inlet tube open in the outer ring for the remainder of the time.

NOTE 4—When connecting or disconnecting the bag from the inner ring, do not raise the bag above the level of the water in the outer ring with the shut-off valve open. This would cause an uplift force to act on the inner ring and could cause it to rise out of the trench.

8.10 *Ending Test:*

8.10.1 Remove the fittings and tubing from the inner ring.

8.10.2 Drain water from rings.

8.10.3 Excavate the grout from around the rings and pull the rings out of the ground.

8.10.4 Excavate a narrow trench in the area encompassed by the inner ring and take moisture content samples every 25 mm (1 in.) to a depth of 150 mm (6 in.) below the observed wetting front. An alternative to this is to push a thin-walled sampling tube into the soil, extrude the soil, and slice it every 25 mm (1 in.) for moisture content samples.

9. Calculation

9.1 Calculate the infiltration rate for each timed interval as follows:

$$I\ (\mathrm{m/s}) = \frac{Q}{tA} \times 10^{-6}$$

where:

Q = volume of flow, mL,
= $W_1 - W_2$
W_1 = initial weight of bag, g,
W_2 = final weight of bag, g,
t = time of flow, s = $t_2 - t_1$,
t_1 = time shut-off valve on bag was opened,
t_2 = time shut-off valve was closed, and
A = area of inner ring, m^2.

9.2 Calculate the amount of flow which resulted from any temperature fluctuations for each timed interval (see Note 5). If the flow due to temperature fluctuations is greater than 20 % of the total flow measured, then correct the flow used to calculate the infiltration rate by this amount.

NOTE 5—Expansion and contraction of the inner ring due to temperature changes will cause water to flow into or out of the measurement bag. The inner ring should be calibrated to determine if the flow resulting from temperature change is significant compared to flow due to infiltration. Calibration can be performed by sealing the inner ring to the bottom of a small plastic pool. Fill the pool and ring with water and allow the temperature to reach equilibrium. Connect a measurement bag to the inner ring and add ice to the pool water to lower the temperature several degrees. Allow the temperature to reach equilibrium and remove the bag. Determine the weight loss/gain and convert it to a volume of water. Divide this volume of water by the change in temperature to obtain a calibration factor for temperature changes.

9.3 Note the volume of air expelled from the weekly purging of the inner ring. Compare this volume of air with the volume of infiltration that occurred during the time the air collected in the inner ring. If this volume is significant, (that is, 20 % of that used to determine infiltration in 9.1,) then adjust the infiltration rates in 9.1 to account for it.

10. Report

10.1 Report the following information:

10.1.1 A data sheet such as the one shown in Fig. 4,

10.1.2 A semi-log plot of infiltration versus time such as that shown in Fig. 5,

10.2 Additional optional information that can be presented in the report includes the following,

10.2.1 Thickness of layer tested,

10.2.2 A description of material beneath the layer tested,

10.2.3 Total and dry density of the layer tested,

10.2.4 Initial moisture content of the layer tested,

10.2.5 Initial degree of saturation,

10.2.6 Moisture contents of samples taken after termination of test,

10.2.7 Estimate of the depth to the saturation front.

11. Precision and Bias

11.1 *Precision*—Due to the nature of the soil or rock materials tested by this test method, it is either not feasible or too costly at this time to produce multiple specimens which have uniform physical properties. Any variation observed in the data is just as likely to be due to specimen variation as to operator or laboratory testing variation. Subcommittee

Page _of _

DATA FORM FOR SDRI TEST

Project: _____

Inner ring info: _____

Outer ring info: _____

Liner thickness (m): _____

$I = \frac{Q}{A\,t} \times 10^{-6}$

I = infiltration (m/sec)

Q = quantity of flow (mL)

t = interval of time (sec)

A = area of inner ring (m2) _____

Date	Initial time (sec)	Final Time (sec)	t Interval of Time (sec)	Initial Wt. of Bag (grams)	Final Wt. of Bag (grams)	Q Quan. of Flow (mL)	I Infiltration (m/sec)	Temp. (C)	Water Depth (m)

NOTES:

FIG. 4 Data Sheet For Infiltration Test Using A Double-Ring Infiltrometer With A Sealed Inner Ring

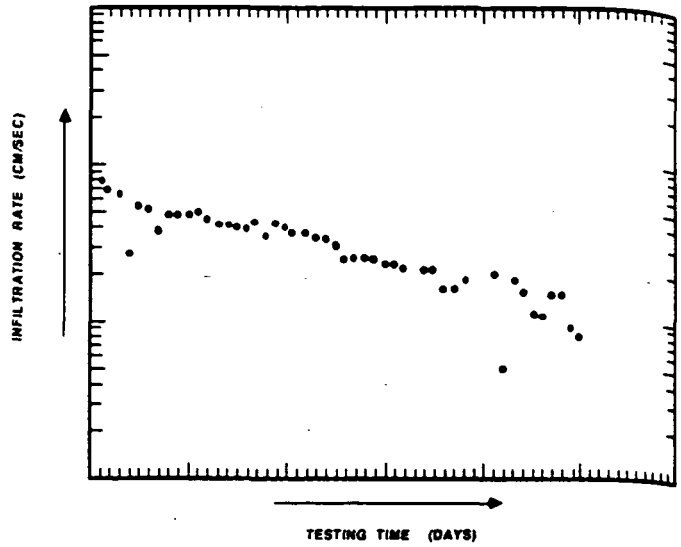

FIG. 5 Infiltration Rate Versus Time On A Semi-log Plot

D18.04 welcomes proposals that would allow for development of a valid precision statement.

11.2 *Bias*—There is no accepted reference value for this test method, therefore, bias cannot be determined.

12. Keywords

12.1 double ring infiltration; in-place infiltration; soil moisture infiltrometer

The American Society for Testing and Materials takes no position respecting the validity of any patent rights asserted in connection with any item mentioned in this standard. Users of this standard are expressly advised that determination of the validity of any such patent rights, and the risk of infringement of such rights, are entirely their own responsibility.

This standard is subject to revision at any time by the responsible technical committee and must be reviewed every five years and if not revised, either reapproved or withdrawn. Your comments are invited either for revision of this standard or for additional standards and should be addressed to ASTM Headquarters. Your comments will receive careful consideration at a meeting of the responsible technical committee, which you may attend. If you feel that your comments have not received a fair hearing you should make your views known to the ASTM Committee on Standards, 1916 Race St., Philadelphia, PA 19103.

APPENDIX C

TEST PAD
CONSTRUCTION SPECIFICATIONS

TABLE OF CONTENTS

Test Pad Construction Specifications

- Division 1: General
  - Section 01000, *General Requirements*
  - Section 01050, *Surveying*
  - Section 01600, *Materials and Equipment*

- Division 2: Site Work
  - Section 02110, *Clearing, Grubbing, and Stripping*
  - Section 02200, *General Earthwork*
  - Section 02220, *Compacted Clay Test Pads*
  - Section 02270, *Erosion and Sediment Control*
  - Section 02950, *Site Restoration*

SECTION 01000

GENERAL REQUIREMENTS

SECTION 01000

GENERAL REQUIREMENTS

PART 1 GENERAL

1.01 SECTION INCLUDES

A. This Section of the Specifications describes the general requirements and establishes the qualifications of the Test Pad Contractor for test pad construction.

1.02 RELATED SECTIONS

A. All sections.

1.03 PARTIES

A. The parties directly involved with the test pad program are defined below.
   1. Construction Contracts Manager refers to FERMCO.
   2. CQA Engineer refers to GeoSyntec Consultants.
   3. The Test Pad Contractor refers to the earthwork contractor procured by FERMCO to do the Work.
   4. The Surveyor refers to a licensed or otherwise appropriately trained and qualified (as established by the Construction Contracts Manager) surveyor from the FERMCO organization designated to provide survey control and layout during the test pad construction.

1.04 SCOPE OF WORK

A. The scope of work for the test pad program is set forth in the Test Pad Work Plan (TPWP). The TPWP is an integral part of the contract for the Work.

1.05 TEST PAD CONTRACTOR RESPONSIBILITIES

A. The Test Pad Contractor shall be responsible for constructing the test pads in accordance with the TPWP. The Test Pad Contractor shall be responsible for the activities listed below and as described in all other sections of these Specifications and the TPWP.
   1. Familiarizing all Test Pad Contractor personnel with the applicable requirements of the TPWP.
   2. Familiarizing all Test Pad Contractor personnel with the Health and Safety Plan for the test pad program.
   3. Participating in a preconstruction meeting.
   4. Installing and maintaining all erosion and sediment (E&S) control measures.

5. Constructing the construction access road and installing temporary drainage culverts.
6. Providing security fencing around the test pad construction site.
7. Clearing, grubbing, and stripping topsoil from the test pad construction site.
8. Stockpiling topsoil in areas designated by the CQA Engineer or Construction Contracts Manager.
9. Providing equipment and labor for the construction of the test pads.
10. Constructing the test pads.
11. Providing equipment and labor to assist CQA personnel.
12. Repairing all sample and test locations, as directed by CQA personnel.
13. Protecting all completed work from damage and repairing all damaged Work.
14. Decommissioning the test pads.
15. Restoring the disturbed area through final grading, topsoil replacement, and reseeding.
16. Removing temporary E&S controls after vegetation has been re-established.
17. Providing all required record documentation.
18. Performing all activities in accordance with FERMCO Health and Safety (H&S) requirements and other applicable site procedures.

1.06 TEST PAD CONTRACTOR EXPERIENCE QUALIFICATIONS

A. The Test Pad Contractor shall be a registered Test Pad Contractor in the State of Ohio and shall meet all other requirements including insurance and bonding in accordance with the general conditions of the contract documents.

B. The superintendent in charge of construction for the Test Pad Contractor shall be on-site full time during construction of the test pads and shall have a minimum of three years experience in directing earthwork construction, preferably responsible charge for successful completion of compacted clay liner or cap for a solid waste disposal facility.

1.07 HEALTH AND SAFETY

A. It is the sole responsibility of the Test Pad Contractor to be completely familiar with and follow all procedures set forth in the FERMCO Health and Safety Plan.

PART 2 PRODUCT

This part not used.

PART 3 EXECUTION

This part not used.

[END OF SECTION]

SECTION 01050

PROJECT SURVEYING

SECTION 01050

PROJECT SURVEYING

PART 1 GENERAL

1.01 SECTION INCLUDES

A. The Work of this Section shall include, but not necessarily be limited to: establishing (layout and marking) construction control points, providing a pre-construction topographic survey of the test pad construction site, providing verification of grades prior to, during, and after test pad construction, providing documentation of lift thickness prior to and after compaction of clay lifts on the test pads, and providing topographic survey of the test pad construction site after grades have ben re-established.

1.02 RELATED SECTIONS

A. All Sections.

PART 2 EQUIPMENT

2.01 The survey instruments used on this project shall be capable of reading to a precision of 0.01 feet and with a setting accuracy of 10 seconds.

PART 3 EXECUTION

3.01 The Surveyor shall establish at least three temporary benchmarks (control points) in close proximity to the test pad construction site that are referenced laterally and vertically to the site coordinate system and National Geodetic Vertical Datum (NGVD).

3.02 The Surveyor shall stake the location of each control point shown on the figures provided in the Test Pad Work Plan (TPWP). These include, but are not necessarily limited to, the four corners delineating the test pad construction site, the four corners delineating the locations of the test pads, and the boundaries of the borrow excavation.

3.03 The Surveyor shall provide documentation clearly demonstrating that the test pad construction site is sloped at a downward grade of 2 percent ($\pm$0.5 percent) toward the silt-fence and straw-bale filter check dam located at the south end of the site.

3.04 The Surveyor shall provide documentation for every lift of each test pad certifying that the loose lift thickness is 8 $\pm$ 1.0 inches.

3.05 The Surveyor shall provide coordinates for no less than eight points delineating the final extent of the borrow excavation and elevations at the bottom of the borrow excavation.

3.06 The Surveyor shall provide a plan sheet showing 1-foot topographic contours after the test pad program is complete and the area has been restored to the conditions which existed prior to the test pad program. The topographic plan shall extend at least 25 feet beyond the limits of the test pad construction site.

[END OF SECTION]

SECTION 01600

MATERIALS AND EQUIPMENT

SECTION 01600

MATERIALS AND EQUIPMENT

PART 1 GENERAL

1.01 DELIVERY AND STORAGE

A. The Test Pad Contractor shall coordinate all orders and deliveries with the progress of the work so as to cause no undue delays in any part of the work and shall receive all deliveries in good condition, suitable for installation. Generally, all materials stored at the site shall be kept in good condition raised off the ground, protected from weather and vandalism, adequately ventilated, and so arranged as to prevent damage, distortion, deterioration, or other harm which would detract from their appearance or function.

B. All materials delivered to the site shall bear manufacturer's trade names, labels, stamps, or other suitable identification clearly marked in a conspicuous place.

1.02 MATERIALS AND EQUIPMENT

A. Unless otherwise specified, all materials shall be new, and all equipment shall be of such quality as to be in good working condition and as required to satisfy the standards of the Contract Documents. The Test Pad Contractor shall, if required, furnish satisfactory evidence as to kind and quality of all materials and equipment.

1.03 EQUIPMENT ACCESS

A. The Test Pad Contractor shall arrange with the Construction Contracts Manager for site access for all construction equipment.

PART 2 EQUIPMENT

2.01 LIST OF REQUIRED EQUIPMENT

A. The Test Pad Contractor shall provide all equipment required to perform the work described in the Test Pad Work Plan (TPWP) and in these Specifications. The equipment shall include, but not be limited to, the equipment listed below during test pad construction.

1. Caterpillar 815B soil compactor meeting the specification in Table 01600-1.
2. Caterpillar D6 or D7 bulldozer or approved equivalent.
3. Caterpillar 613C water tanker truck or approved equivalent.
4. Caterpillar 613 elevating scraper or approved equivalent.
5. Harrowing disc, consisting of two rows of twelve discs, each disc having a diameter of 18 in. (450 mm).

6. Caterpillar 140G motor grade or approved equivalent.
7. Hand compactor.
8. Walk-behind smooth drum roller.
9. Rock rake for processing soil.
10. Sump pump with 50 capacity of at least 250 gallons per minute (gpm).

B. The Test Pad Contractor shall be prepared to provide a Caterpillar SS250, soil stabilizer or approved equivalent to the project site, should the results of preliminary soil pre-processing evaluations performed by the Test Pad Contractor using a disc or rake not result in satisfactory breakdown of soil clods or uniform blending of moisture (see Section 02220 of these Specifications).

C. The Construction Contracts Manager will notify, in writing, the Test Pad Contractor of the need to provide a SS250 soil stabilizer, or equivalent, to the project. The Test Pad Contractor shall provide the soil stabilizer on-site within two working days of written notification of the need for such soil stabilizer.

D. The Test Pad Contractor shall provide a field office for the CQA Engineer personnel which shall meet the following:
   1. Be of sufficient size to allow four (4) persons to work comfortably, shall be capable of supporting normal office operations, and shall be large enough to conduct basic soil index testing activities. The field office for the CQA Engineer shall have an automatic-feed copy machine.
   2. Be provided with adequate heating, air conditioning, and electric lighting for the full duration of the test pad program. The offices shall have continuous power not subject to voltage fluctuations which are capable of damaging electrical equipment. The Test Pad Contractor shall maintain the condition of all offices.
   3. Provide portable (cellular) telephone capabilities in the trailer. The Test Pad Contractor shall pay the cost for local calls of the CQA Engineer. Telephones shall be equipped with easily audible gongs and shall be kept in operation until the test pad program is entirely completed. Wall mounted pay phones will not be acceptable.

E. The Test Pad Contractor shall provide and maintain in a neat and sanitary condition such sanitary conveniences and accommodations for the use of his employees, the CQA Engineer personnel, and others, as may be necessary.

F. The Test Pad Contractor shall provide and maintain a temporary potable and water supply at the location of the field offices. The Test Pad Contractor shall obtain non-potable water for constructing the test pads (and other construction activities such as dust control) from an on-site source specified by the Construction Contracts Manager.

G. The Test Pad Contractor shall provide and maintain temporary electricity (i.e., generators) throughout the duration of the test pad program. The Test Pad Contractor shall provide and install all temporary wiring lamps, accessories and current required for completion of the Work. Temporary wiring shall be installed so as not to interfere with construction activities or ongoing on-site business activity of the CQA Engineer. The Test Pad Contractor shall provide all fuel and activities required to keep the generator(s) continuously operational (overnight and weekends, etc.) throughout the duration of the test pad program.

TABLE 01600-1

CATERPILLAR 815B SOIL COMPACTOR SPECIFICATIONS[1]

Item	Specified Value
Flywheel Power Operating Weight[2]	216 hp 44,175 lb
Engine Model Rated Engine RPM	3306 2206
No. Cylinders Displacement	6 638 in^3
SPEEDS: Forward Reverse	 4 4
Turning Circle with Blade Fuel Tank Refill Capacity	40'3" 122 U.S. gal.
TAMPING FOOT WHEELS: Each Drum Width Diameters, over feet over drum	 3'2.5" 4'8" 3'4.5"
Feet per Wheel Feet per Row	60 12
Rows of Feet Foot Length	5 6.6"
End Area Per Foot Width of Two Pass Coverage	21 in^2 14'3"
GENERAL DIMENSIONS: Height (top of ROPS) Height (stripped top)[3]	 11'7" 7'10"
Wheel Base Overall Length with Dozer	11'0" 22'4"
Width over Drums Ground Clearance[4]	10'8" 8"
STRAIGHT BULLDOZER: Width Height	 12' 2'10"

Notes:
1. Obtained from *Caterpillar performance Handbook*, Edition 19, October 1988.
2. Operating Weight includes coolant, lubricants, bulldozer, hydraulics, ROPS canopy, full fuel tank and operator.
3. Height (stripped top) - without ROPS, exhaust, seat back or other easily removed encumbrances.
4. With Compactor feet at 100% penetration.

[END OF SECTION]

SECTION 02110

CLEARING, GRUBBING, AND STRIPPING

SECTION 02110

CLEARING, GRUBBING, AND STRIPPING

PART 1 GENERAL

1.01 SECTION INCLUDES

A. The Test Pad Contractor shall furnish all labor, materials, tools, supervision, transportation, installation equipment, and incidentals necessary to complete the work specified herein and described in the Test Pad Work Plan (TPWP). The work shall include, but not limited to:
   1. clearing and grubbing the test pad construction site and construction access road corridor of existing vegetation, brush, and surface debris; and
   2. stripping and transporting top soil to the location of the runon control berms or stockpiles at locations shown in the TPWP or as directed by the CQA Engineer.

1.02 RELATED SECTIONS

A. Section 01000 - General Requirements

B. Section 01025 - Measurement and Payment

C. Section 01050 - Project Surveying

D. Section 02270 - Erosion and Sediment Control

1.03 REFERENCES

A. Ohio Department of Natural Resources, Rainwater and Land Development, 2nd ed., 1996.

1.04 COMPLIANCE WITH REGULATIONS

A. It is the sole responsibility of the Test Pad Contractor to be completely familiar with and to follow all local, state, and federal regulations pertaining to the work required in this section.

1.05 EXISTING CONDITIONS

A. The approximate locations of known underground and above ground utility lines and structures within the limit of test pad construction site are identified in the TPWP. The Test Pad Contractor shall comply with applicable regulations in locating and providing

clearance for all underground and above ground utilities prior to beginning construction activities. The Test Pad Contractor shall immediately notify the CQA Engineer if other utility lines or structures, not shown on the Drawings, are encountered. Repair of damage and all restitution for liabilities resulting from any damage to existing facilities due to activities by the Test Pad Contractor shall be at the Test Pad Contractor's expense.

PART 2 PRODUCTS

2.01 MATERIALS

A. Materials to be cleared includes trees, shrubs, and any debris or other foreign matter that is not suitable for inclusion directly underneath the test pad or test pad construction site, as identified by the CQA Engineer.

B. Existing top soil shall be the surficial material occurring within the limits of the test pad construction site to a depth ranging from zero to approximately 12 inches (or deeper as identified by the CQA Engineer) beneath the ground surface.

PART 3 EXECUTION

3.01 FAMILIARIZATION

A. Prior to implementing any of the work described in this Section, the Test Pad Contractor shall become thoroughly familiar with the site, the site conditions, and all portions of the work covered by this Section.

B. Inspection:
   1. Prior to implementing any of the work in this Section, the Test Pad Contractor shall carefully inspect the installed work of all other Sections and verify that all work is complete to the point where the work of this Section may properly commence without adverse impact.
   2. If the Test Pad Contractor has any concerns regarding the installed work of other Sections, he shall notify the CQA Engineer in writing prior to the commencement of operations. Failure to notify the CQA Engineer will be construed as Test Pad Contractor acceptance of the related work of all other Sections.

3.02 EROSION AND SEDIMENT CONTROL

A. Prior to implementing any of the work described in this Section, the Test Pad Contractor shall install all erosion and sediment controls in the relevant area(s) of

construction, including all areas identified in the TPWP and all areas downgradient of any ground disturbance.

B. Construction details and requirements representing the minimum erosion and sediment control standards that shall be met by the Test Pad Contractor are provided in the TPWP and in Section 02270 of these Specifications. However, regardless of any minimum standards, the Test Pad Contractor is solely responsible for selecting, implementing, and maintaining proper and fully adequate erosion and sediment controls at all times.

3.03 CLEARING AND GRUBBING

A. Clearing and grubbing shall only be performed in areas identified within the limits of the test pad construction site identified in the TPWP and approved by the CQA Engineer. All erosion and sedimentation controls shall be in place before the start of clearing.

B. If weather conditions are unsuitable for clearing and grubbing, as determined by the CQA Engineer, the Test Pad Contractor shall cease operations until permission to resume operations is obtained from the CQA Engineer.

C. The Test Pad Contractor shall clear all areas required for access to the site and execution of work. Clearing shall consist of removing trees, undergrowth, and deadwood. Clearing activities shall be performed in a manner so as to minimize disturbance to the existing top soil. Vegetation removed during clearing operations shall be shredded, chipped or otherwise reduced in size to a maximum dimension of 1 inch. Cleared material shall be transported to a location designated by the Construction Contracts Manager.

D. Grubbing shall consist of the removal stumps, roots, and surficial debris from the limits of the test pad construction site identified in the TPWP. Grubbed material shall be transported to a location designated by the Construction Contracts Manager.

E. If deemed necessary by the CQA Engineer, clearing and grubbing for the construction access road shall also be the responsibility of the Test Pad Contractor.

3.04 STRIPPING

A. Existing top soil shall be removed from areas within the limits of the test pads, the borrow excavation, and other areas of the test pad construction site required to facilitate equipment traffic. The top soil shall be transported by the Test Pad Contractor to a location designated by the Construction Contracts Manager.

B. Equipment and methods of operation shall be selected by the Test Pad Contractor with the intent of minimizing disturbance to underlying soils.

C. If soil or weather conditions are unsuitable for top soil stripping, as determined by the CQA Engineer, the Test Pad Contractor shall cease stripping activities until permission to resume stripping activities is obtained from the CQA Engineer.

3.05 SOIL STOCKPILING

A. Stripped top soil shall be placed in stockpiles of neat configurations and having sideslopes no steeper than 1H:1V. The surface of each stockpile shall be shaped and tracked prior to the end of each working day during which soil is stockpiled.

3.06 SURVEYING AND CONSTRUCTION TOLERANCES

A. The Test Pad Contractor shall fully cooperate with the Surveyor who shall be responsible for providing survey control of the Test Pad Contractor's work. All surveying shall be performed in accordance with Section 01050 of these Specifications.

3.07 PROTECTION OF WORK

A. The Test Pad Contractor shall use all means necessary to protect all prior work, including all materials and completed work of other Sections.

B. In the event of damage, the Test Pad Contractor shall immediately make all repairs and replacements necessary, to the approval of the CQA Engineer, and at his own expense.

[END OF SECTION]

SECTION 02200

GENERAL EARTHWORK

SECTION 02200

GENERAL EARTHWORK

PART 1 GENERAL

1.01 SECTION INCLUDES

A. The Test Pad Contractor shall furnish all labor, materials, tools, supervision, transportation, installation, and equipment necessary to perform all general earthwork for drainage control and access roads as specified herein and as described in the Test Pad Work Plan (TPWP).

B. The Test Pad Contractor shall be prepared to perform the earthwork in conjunction with other construction activities.

C. The Work of this Section shall include, but not necessarily be limited to: excavating, hauling, backfilling, compacting, and grading soil materials. The Work of this Section may pertain in whole or in part to construction and maintenance of the following: runon control berms, construction access road, temporary drainage culverts, and overall grading of the test pad construction site to promote drainage from the north to the south end of the site. The Work of this Section also includes temporary erosion and sediment control and surface-water control as required, any dewatering required, and protection necessary to complete the Work.

1.02 RELATED SECTIONS

A. Section 01025 - Measurement and Payment

B Section 01050 - Project Surveying

C. Section 02110 - Clearing, Grubbing, and Stripping

D. Section 02220 - Compacted Clay Test Pads

E. Section 02270 - Erosion and Sediment Control

F. Section 02950 - Site Restoration

1.03 REFERENCES

A. Ohio Department of Transportation Construction and Material Specifications, dated 1 January 1993.

B. Ohio Department of Natural Resources, Rainwater and Land Development, 2nd ed., 1996.

1.04 COMPLIANCE WITH REGULATIONS

A. It is the sole responsibility of the Test Pad Contractor to be completely familiar with and to follow all local, state, and federal regulations pertaining to the Work required in this Section.

1.05 CONSTRUCTION QUALITY ASSURANCE

A. The Test Pad Contractor shall be aware of the CQA activities set forth in the TPWP and shall account for these activities in the construction schedule.

B. The Test Pad Contractor shall assist CQA personnel in every manner necessary for the proper performance of CQA activities.

C. CQA testing or inspections in no manner relieves the Test Pad Contractor of the responsibility to construct all Work to conform to these Specifications.

D. If quality control or quality assurance tests indicate Work does not meet specified requirements, the Test Pad Contractor shall remove Work, replace the Work, and retest.

1.06 EXISTING CONDITIONS

A. The approximate locations of known underground and above ground utility lines and structures within the limit of disturbance are shown in the TPWP. The Test Pad Contractor shall comply with applicable regulations in locating and providing clearance for all underground and above ground utilities prior to beginning construction activities. The Test Pad Contractor shall immediately notify the CQA Engineer if other utility lines or structures, not identified in the TPWP, are encountered. Repair of damage and all restitution for liabilities resulting from any damage to existing facilities due to activities by the Test Pad Contractor shall be at the Test Pad Contractor's expense.

PART 2 PRODUCT

2.01 MATERIAL

A. Top soil is defined as the existing soil layer within the limits of the test pad construction site to a depth of approximately 6 inches (or deeper if identified by the CQA Engineer).

B. The soil beneath the top soil to a depth of 5 ft is defined as the upper horizon brown clay.

C. The soil located between a depth of 5 ft and 10 ft is defined as the lower horizon brown clay.

D. The geotextile separator for the construction access road shall be a polymeric textile meeting or exceeding the specified values in Table 02200-1.

E. Crushed aggregate for the construction access road shall meet the specified requirements for ODOT Type A bank run, crusher run, or graded aggregate specified in Section 410.02 of the Ohio DOT Construction and Material Specifications.

F. Corrugated Metal Pipe (CMP) for the temporary drainage culverts shall have a corrugation depth of 1/2 inch or 1/4 inch and shall conform to AASHTO M 36. Helical corrugated pipe, 12-inch diameter and larger, shall have at least two annular corrugations at each end of each pipe length. The minimum wall thickness of the 24-inch diameter steel pipe shall be 0.064 inch. Coupling bands shall have annular corrugations and shall not be more than two nominal sheet thickness thinner than the thickness of the pipe to be connected.

PART 3 EXECUTION

3.01 FAMILIARIZATION

A. Prior to implementing any of the Work described in this Section, the Test Pad Contractor shall become thoroughly familiar with the site, the site conditions, and all portions of the Work falling within this Section.

B. Inspection:
   1. Prior to implementing any of the Work in this Section, the Test Pad Contractor shall carefully inspect the installed Work of all other Sections and verify that all Work is complete to the point where the Work of this Section may properly commence without adverse impact.
   2. If the Test Pad Contractor has any concerns regarding the installed Work of other Sections, he shall notify the CQA Engineer prior to the commencement of earthwork operations. Failure to notify the CQA Engineer will be construed as Test Pad Contractor acceptance of the related Work of all other Sections.

3.02 EROSION AND SEDIMENT CONTROL

A. Prior to implementing any of the Work described in this Section, the Test Pad Contractor shall install all erosion and sediment controls in the relevant area(s) of construction.

B. Standard details and requirements representing the minimum erosion and sediment control standards that shall be met by the Test Pad Contractor during construction are provided in the TPWP and in Section 02270 of these Specifications. However, regardless of any minimum standards, the Test Pad Contractor is solely responsible for selecting, implementing, and maintaining proper and fully adequate erosion and sediment controls at all times.

3.03 SITE PREPARATION

A. The Test Pad Contractor shall install silt fences and/or straw bales or whatever sediment-control provisions are necessary downslope of each area to be disturbed prior to the beginning of Work in that area as described in Section 02270 and as described in the TPWP. The Test Pad Contractor shall inspect erosion and sediment controls on a daily basis and shall maintain the erosion and sediment controls for the duration of construction and until the contained areas are successfully revegetated. Accumulated sediment behind the silt fences shall be disposed of on-site by the Test Pad Contractor in a manner approved by the CQA Engineer.

B. Temporary stormwater diversion measures (including the runon control ditches shown in the TPWP) shall be constructed by the Test Pad Contractor as required to divert stormwater around or away from the test pad construction area and the borrow excavation. The construction of temporary measures not identified in the TPWP shall not be undertaken until approved by the CQA Engineer.

3.04 STOCKPILING

A. The top 6 inches of excavated top soil shall be treated as impacted material and stockpiled outside the limits of the test pad construction site at a location specified by the Construction Contracts Manager.

B. Excavated materials shall be stockpiled in approved areas within the limit of the test pad construction site as delineated in the TPWP.

C. Stockpiles shall be no steeper than 1H:1V (horizontal: vertical) unless otherwise approved by the CQA Engineer. Stockpiles shall be graded to drain, sealed by tracking parallel to the slope with a dozer or other means, and dressed daily during periods when

fill is taken from the stockpile. The Test Pad Contractor may cover soil stockpiles with plastic sheeting or other material in order to preserve the moisture content of the fill and to minimize erosion.

3.05 CONSTRUCTION ACCESS ROAD

A. The Test Pad Contractor shall construct the construction access road by placing the geotextile separator directly over the existing ground surface. No grubbing or stripping of topsoil will be required, unless directed by the CQA Engineer.

B. The temporary drainage culverts shall be installed near the entrance of the construction access road off the North Entrance Road as shown in the TPWP. The culverts shall be covered with ODOT No. 1 and No. 57 stone as shown in the TPWP. Rockfill (Type D) shall be placed at the inlet and outlet of the culverts.

C. Crushed aggregate (ODOT No. 57) shall be placed and spread over the geotextile separator to a minimum thickness of 12 inches. The Test Pad Contractor shall place and spread the crushed aggregate using equipment and methods that do not result in damage to the underlying geotextile separator.

D. The Test Pad Contractor shall maintain trafficability along the construction access road for all construction equipment and personnel vehicles. In the event of excessive rutting or fouling by dirt or mud, the Test Pad Contractor shall place an additional thickness of aggregate on the construction access road to improve trafficability.

3.06 SITE SUBGRADE PREPARATION

A. After stripping of topsoil, the subgrade surface of the test pad construction site shall be graded by the Test Pad Contractor as necessary to drain from northeast to southwest. The stockpile area shall be graded to drain from north to south.

B. After the Test Pad Contractor finishes grading the subgrade, the CQA Engineer will inspect the subgrade surface. The CQA Engineer may identify areas that require excavation of wet or soft materials. Such excavations shall be backfilled with brown till as directed by the CQA Engineer.

C. The subgrade surface shall be seal-rolled to minimize moisture infiltration and promote stormwater runoff.

3.07 RUNON DIVERSION DITCH

A. The Test Pad Contractor shall strip the existing top soil within the limits of the test pad including the locations of the runon control ditches as specified in Section 02110.

B. Stripped topsoil shall be transported by the Test Pad Contractor to the location outside the test pad construction site designated by the Construction Contracts Manager.

C. Runon diversion ditches shall be constructed at the locations shown in the TPWP.

D. Soil excavated to form the ditch shall be stockpiled downgradient of the ditch as shown in the TPWP.

E. The Test Pad Contractor shall inspect the runon diversion ditches on a daily basis and shall repair any areas showing signs of erosion or otherwise needing maintenance.

3.08 PUMPING AND DRAINAGE

A. At all times during construction, the Test Pad Contractor shall provide and maintain proper equipment and facilities to remove all water entering the construction area so as to obtain satisfactory working conditions. Whenever necessary, the Test Pad Contractor shall provide pumping of storm or other water to protect any phase of the Work.

B. The Test Pad Contractor shall be responsible for controlling stormwater runoff and runon in and around the test pad area and borrow excavation area.

C. Surface water shall be pumped or drained from the active construction area in order to maintain the construction area free from standing water. As necessary, the Test Pad Contractor shall pump surface water from construction areas to the southwest end of the test pad construction site for temporary detention and filtering through the straw bale check dam.

D. The Test Pad Contractor shall pump ground water and surface water entering the borrow excavation into temporary holding tanks or tanker trucks and, upon direction from the Construction Contracts Manager, shall transport the collected ground water to the on-site detention facility for Investigation Derived Waste (IDW).

3.09 DUST CONTROL

A. Water and/or dust suppressants shall be applied as needed, or as directed by the CQA Engineer, in order to control dust during construction.

3.10 SURVEYING AND CONSTRUCTION TOLERANCES

A. The Test Pad Contractor shall fully cooperate with the Surveyor who shall be responsible for providing survey control of the Test Pad Contractor's Work. All surveying shall be performed in accordance with Section 01050 of these Specifications.

3.11 PROTECTION OF WORK

A. The Test Pad Contractor shall use all means necessary to protect all prior Work, including all materials and completed Work of other Sections.

B. In the event of damage, the Test Pad Contractor shall immediately make all repairs and replacements necessary, to the approval of the CQA Engineer, and at his own expense.

TABLE 02200 - 1

REQUIRED PROPERTIES OF GEOTEXTILE SEPARATOR

PROPERTIES	QUALIFIER[1]	UNITS	SPECIFIED VALUES	TEST METHOD
Polymer composition[2]	minimum (by weight)	%	95	-
Mass per unit area	minimum	oz/yd^2	6	ASTM D 3776
Separation Requirements				
Apparent opening size (O_{95})	maximum	mm	0.2	ASTM D 4751
Permittivity	minimum	sec^{-1}	0.3	ASTM D 4491
Mechanical Requirements				
Burst strength	minimum	psi	170	ASTM D 3786
Grab strength	minimum	lb	200	ASTM D 4632
Tear strength	minimum	lb	80	ASTM D 4533
Puncture resistance	minimum	lb	25	ASTM D 4833
Ultraviolet resistance	minimum	%	70	ASTM D 4355
Secant modulus	minimum	lb/in.	400	ASTM D 1682

Notes: (1) All minimum values represent minimum average roll values (i.e., any roll in a lot should meet or exceed the values in this table).

(2) Polymer composition of geotextile separator shall be either polypropylene or polyester.

[END OF SECTION]

SECTION 02220

COMPACTED CLAY TEST PADS

SECTION 02220

COMPACTED CLAY TEST PADS

PART 1 GENERAL

1.01 SECTION INCLUDES

A. The Test Pad Contractor shall furnish all labor, materials, tools, supervision, transportation, and installation equipment necessary for the construction of the test pads, as specified herein and as described in the Test Pad Work Plan (TPWP).

B. The Work of this Section shall include, but not necessarily be limited to: test pad subgrade preparation, soil processing and moisture conditioning, soil excavation from the borrow excavation, and placement and compaction of soil on the test pads.

1.02 RELATED SECTIONS

A. Section 01025 - Measurement and Payment

B. Section 01050 - Project Surveying

C. Section 02200 - General Earthwork

1.03 REFERENCES

A. Ohio Department of Transportation Construction and Material Specifications, dated 1 January 1993.

B. Ohio Department of Natural Resources, Rainwater and Land Development, 2nd ed., 1996.

1.04 COMPLIANCE WITH REGULATIONS

A. It is the sole responsibility of the Test Pad Contractor to be completely familiar with and to follow all local, state, and federal regulations pertaining to the Work required in this Section.

1.05 CONSTRUCTION QUALITY ASSURANCE

A. The Test Pad Contractor shall be aware of the CQA activities set forth in the TPWP and shall account for these activities in the construction schedule.

B. The Test Pad Contractor shall assist CQA personnel in every manner necessary for the proper performance of CQA activities.

C. CQA testing or inspections in no manner relieves the Test Pad Contractor of the responsibility to construct all Work to conform to the TPWP and Specifications.

D. If quality control or quality assurance tests indicate Work does not meet specified requirements, the Test Pad Contractor shall remove Work, replace and retest.

PART 2 PRODUCTS

2.01 MATERIAL FOR TEST PADS

A. The soil obtained from the borrow excavation beneath the top soil to a depth of 5 ft is defined as the upper horizon brown till. This material will be used to construct Test Pad No. 1.

B. The soil obtained from the borrow excavation located between a depth of 5 ft and approximately 10 ft is defined as the lower horizon brown till. This material will be used to construct Test Pad No. 2.

2.02 EQUIPMENT

A. The Test Pad Contractor shall use the equipment listed in Section 01600 of these Specifications, or other equivalent equipment acceptable to the CQA Engineer, with the exception that the Test Pad Contractor must use a Caterpillar 815 compactor.

PART 3 EXECUTION

3.01 FAMILIARIZATION

A. Prior to implementing any of the Work of this Section, the Test Pad Contractor shall become thoroughly familiar with the site, the site conditions, and all portions of the Work falling within this Section.

B. Inspection:
   1. Prior to implementing any Work of this Section, the Test Pad Contractor shall carefully inspect the installed Work of all other Sections and verify that all such Work is complete to the point where the Work of this Section may properly commence without adverse impact.

2. If the Test Pad Contractor has any concerns regarding the installed Work of other Sections or the site, he should notify the CQA Engineer in writing prior to starting construction of the test pads. Failure to notify the CQA Engineer prior to the start of construction of the test pads will be construed as Test Pad Contractor acceptance of the related Work of all other Sections.

3.02 EROSION AND SEDIMENT CONTROL

A. Prior to implementing any of the Work described in this Section, the Test Pad Contractor shall install all erosion and sediment controls in the relevant area(s) of construction.

B. Standard details and requirements representing the minimum erosion and sediment control standards that shall be met by the Test Pad Contractor during construction are presented in the TPWP and described in Section 02270 of these Specifications. However, regardless of any minimum standards, the Test Pad Contractor is solely responsible for selecting, implementing, and maintaining proper and fully adequate erosion and sediment controls at all times.

3.03 FIELD QUALITY ASSURANCE

A. The CQA Engineer will perform field quality assurance testing of all lifts of clay for the test pads, as outlined below. Testing will be performed at the minimum frequencies given in the TPWP. The Test Pad Contractor shall take the minimum testing frequencies into account in planning his construction schedule.
   1. Sampling locations will be selected by the CQA Engineer.
   2. Undisturbed (Shelby-tube) samples of the compacted in-place clay will be obtained by the CQA Engineer with the assistance of the Test Pad Contractor for laboratory hydraulic conductivity testing. The undisturbed samples will be obtained by advancing a Shelby tubes vertically into the clay with smooth strokes from a hydraulic jack using stationary construction equipment (such as a backhoe bucket or bulldozer blade) as a reaction for the hydraulic jack.
   3. A special testing frequency will be used at the discretion of the Engineer when visual observations of the material, or construction performance indicate a potential problem. Additional testing will be considered when conditioning such as the following occur:
      a. the rollers slip during compaction activities;
      b. the lift thickness is greater than specified;
      c. the soil is at improper and/or variable moisture content;
      d. fewer than the specified number of compaction passes are made;

e. dirt-clogged pad feet are used to compact the material; or
f. the degree of compaction is doubtful.

4. During construction, the frequency of testing may also be increased by the CQA Engineer in situations such as:
   a. adverse weather conditions;
   b. breakdown of equipment;
   c. at the start and finish of grading; or
   d. if the material fails to meet specifications.

B. Perforations:
1. Perforations in the clay test pad that must be filled include, but are not limited to:
   a. nuclear density test probe locations;
   b. undisturbed (Shelby-tube) sample locations; and
   c. sand cone test locations.
2. Perforations in the clay test pads will be backfilled by the CQA Engineer with the assistance of the Test Pad Contractor. At the discretion of the CQA Engineer, perforations in the compacted clay liner will be repaired with a soil-bentonite (powdered) mixture containing a minimum of 20 percent bentonite. The backfill will be hand-tamped to the satisfaction of the CQA Engineer.

C. Defective Areas:
1. If a defective area is discovered, the CQA Engineer will determine the extent and nature of the defect. If the defect is indicated by an unsatisfactory test result, the CQA Engineer will determine the extent of the defective area by additional tests, observations, a review of records, or other means that the CQA Engineer deems appropriate. If the defect is related to adverse site conditions, such as overly wet soils or surface desiccation, the CQA Engineer will define the limits and nature of the defect.
2. After the extent and nature of a defect have been determined, the Test Pad Contractor shall correct the deficiency to the satisfaction of the CQA Engineer.
3. Additional testing will be performed by the CQA Engineer to verify that the defect has been corrected. This additional testing will be performed before any additional Work is allowed in the area of deficiency.

3.04 TEST PAD SUBGRADE PREPARATION

A. After all top soil has been stripped from the footprint of the test pads, the Test Pad Contractor shall grade the footprint to the required elevation and proofroll the test pad subgrade in the presence of the CQA Engineer using a heavily loaded dump truck or scraper pan. Areas showing excessive deflection or pumping shall be excavated as directed by the CQA Engineer.

B. Over-excavated areas shall be replaced by the Test Pad Contractor using upper-horizon brown till compacted to at least 95 percent of the standard Proctor maximum dry density.

C. The test pad subgrade (i.e., within the footprint of the test pads) shall be sloped to drain from northeast to southwest at a slope of 1 percent.

D. Test pad subgrade conditions which deteriorate prior to placement of the first lift of clay shall be repaired by the Test Pad Contractor as directed by the CQA Engineer.

3.05 SOIL PROCESSING

A. The Test Pad Contractor shall process the borrow materials prior to transporting and placing them on the test pads. Processing consists of mechanical mixing and moisture conditioning to reduce clod size and distribute moisture evenly through the soil. Processing may be performed in the borrow excavation or at another location within the test pad construction site.

B. As an initial part of the test pad program and prior to initiating construction of the test pads, borrow material processing techniques will be evaluated. The preferred methods of soil processing will be discing or raking. Discing refers to making multiple passes over the soil with a heavy-duty construction disc (harrow) pulled by a bulldozer. Raking refers to making multiple passes over the soil with a rock rake (i.e., series of rigid hooked teeth spaced at 6 to 12 inch (0.15 to 0.30 m) mounted on a transverse bar attached to a bulldozer). The Test Pad Contractor shall make multiple passes with either of these methods over soil in the borrow excavation to evaluate the effectiveness in reducing clod size. The Test Pad Contractor shall add water to the brown clay as directed by the CQA Engineer and make multiple passes with either of the methods to allow the CQA Engineer to evaluate how uniformly moisture is blended into the soil. The CQA Engineer will direct the number of passes, the application of water, and field testing to evaluate the effectiveness of the soil processing method.

C. If either or both of these methods (discing and/or raking) are found by the CQA Engineer to be inadequate, the Test Pad Contractor shall mobilize a transverse rotary mixer (e.g., Caterpillar SS-250, RayCo Gator, Bros LSPRM-8, or similar) to the site within two working days. Similar evaluations of soil processing using the transverse rotary mixer will then be made.

D. Based on the evaluation, the Test Pad Contractor shall use whichever method is selected by the CQA Engineer for all subsequent soil processing and moisture conditioning activities associated with the test program.

E. The Test Pad Contractor shall process material from each horizon of the brown clay to uniformly distribute the moisture and reduce the clod size to no larger than 3 inches in largest dimension. CQA personnel will verify that sufficient mechanical processing has been completed to adequately reduce clod size and distribute moisture prior to placing the soil on the test pad.

F. The Test Pad Contractor shall remove any rocks or other particles (excluding clods) larger than 2 inches in maximum dimension. CQA personnel will verify that oversize particles have been removed and require that the Test Pad Contractor remove any such observed particles.

G. The Test Pad Contractor shall be responsible for processing the soil to achieve uniform moisture content within ± 1.0 percentage point of the target moisture content in the compacted lift. Any lifts on the test pad not within the specified range shall be removed or reprocessed on the test pad until acceptable moisture content test results are achieved. In order to assure that the soil is properly moisture conditioned in the borrow area, the Test Pad Contractor may implement additional actions including those listed below.
   1. Water may be sprayed evenly over the entire processing area until target moisture conditions are achieved.
   2. The Test Pad Contractor should compare the look and feel of the soil during processing to previously acceptable lifts.
   3. The Test Pad Contractor should review moisture content test results to verify the moisture content of the processed soil. CQA personnel will perform nuclear moisture testing in the processing area. The Test Pad Contractor shall prepare the test location using a portable smooth drum roller, vibrating plate compactor, or a smooth drum roller.
   4. Depending on weather conditions, the Test Pad Contractor should anticipate that the soil may undergo drying during placement and compaction. Compensation for such drying may therefore need to be made during the soil processing stage.

3.06 CLAY PLACEMENT AND COMPACTION

A. For placement and compaction of the processed borrow material on each test pad, the Test Pad Contractor shall use the procedures listed below.
   1. The Test Pad Contractor shall moisture condition and scarify the surface of the subgrade or previous clay lift prior to placing any subsequent material. The scarification depth shall be at least 2 inches, and the moisture content shall be within the target moisture content range of the lift to be placed.
   2. The Test Pad Contractor shall spread the processed clay using a Caterpillar D6 bulldozer or equivalent to a loose lift thickness of 8 ± 1 inch. The thickness of the loose lift shall be adjusted to result in a 6-inch thick compacted lift. The final

thickness of the test pad shall be 36 + 2 inches. The Test Pad Contractor shall place at least two grade stakes per lane as a guide for grading the loose lifts.

3. The Test Pad Contractor shall compact the lift using the specified number of passes of the Caterpillar 815 compactor, or acceptable equivalent equipment, in each lane. The speed of the compactor shall be similar to that expected for full scale construction.
4. After compaction, the Test Pad Contractor shall scrape smooth nuclear moisture/density test locations as directed by the CQA personnel. The CQA personnel will inform the Test Pad Contractor of the results.
5. If the moisture content is drier than the target moisture content, but within 2 percentage points of the target moisture content range, the Test Pad Contractor shall sprinkle or spray the soil with water and blend the material in the entire lift to uniformly increase the moisture content.
6. If the moisture content is more than 2 percentage points dry of the target moisture content, the Test Pad Contractor shall remove the material in the entire loose lift, return it to the processing area, and then moisture-condition it until the proper uniform moisture content is obtained, unless the CQA Engineer provides approval for reworking of the soil in place.
7. If the moisture content is too high, the Test Pad Contractor will be instructed to scarify, disc, or pulverize the material in the entire lift to allow it to dry to an acceptable uniform moisture content.

B. The Test Pad Contractor shall compact each lift of each test pad immediately following placement and final moisture conditioning so as to minimize changes in moisture content. It is noted that for all lifts, the Test Pad Contractor will be required to compact the material in three separate lanes. The Test Pad Contractor shall provide uniform compaction across the entire lane. The Test Pad Contractor will be required to perform all compaction operations using a Caterpillar 815 compactor operating at a ground speed approximately equal to the speed normally used during full-scale compaction. The number of passes (i.e., one-way trip across the test fill) of the Caterpillar 815 will be specified by the CQA Engineer. It is anticipated that a minimum of 4 passes in Lane 1, 6 passes in Lane 2, and 10 passes in Lane 3 will be required. The number of passes to accomplish the targeted range of dry density may need to be modified. In all cases, however, the minimum number of passes will be four and the Test Pad Contractor shall provide the number of passes specified by the CQA Engineer.

C. The final lift (Lift No. 6) of each test pad shall be backbladed by the Test Pad Contractor with a bulldozer after compaction and lightly compacted with a smooth drum roller until smooth. To protect SDRI test locations, the Test Pad Contractor shall cover a 16 ft by 16 ft area selected by the CQA Engineer in each lane with flexible plastic

sheeting (e.g., visqueen) that is at least 8 mils thick. The plastic sheeting in Lanes 1 and 2 of each test pad shall be continuously anchored at the edges by the Test Pad Contractor using continuous rows of sandbags. The plastic sheeting in Lane 3 of each test paid shall be continuously anchored at the edges by the Test Pad Contractor in a 4 inches by 4 inches anchor trench, and the plastic sheeting shall be carefully covered completely by the Test Pad Contractor with a 12-inches thick layer of excess top soil or brown clay.

3.07 SOIL STOCKPILING

A. Excavated brown till for use in the Test Pad program shall be stockpiled in the soil stockpile area identified in the TPWP or as directed by the CQA Engineer. Soil shall be placed in stockpiles of neat configurations and having sideslopes no steeper than 1H:1V. The surface of each stockpile shall be shaped and tracked prior to the end of each working day during which soil is stockpiled.

3.08 SURVEYING AND CONSTRUCTION TOLERANCES

A. The Test Pad Contractor shall fully cooperate with the Surveyor who shall be responsible for all surveying associated with the Test Pad Contractor's Work. All surveying shall be performed in accordance with Section 01050 of these Specifications.

B. During test pad construction, the CQA Engineer will provide surveying assistance to the Surveyor for monitoring compacted lift thickness. For each lane, the elevation of the top of the compacted lift (measured at the bottom of compactor cleat marks) shall be measured by the Surveyor at three locations using a survey level or laser. The same locations shall be surveyed for every lift so accurate thicknesses can be determined. The Surveyor shall provide the CQA Engineer with a copy of the survey notes before the end of each work day.

3.09 PROTECTION OF WORK

A. The Test Pad Contractor shall use all means necessary to protect all prior Work, including all materials and completed Work of other Sections.

B. In the event of damage to or deterioration of installed portions of the test pads, the Test Pad Contractor shall make all repairs and replacements necessary, to the approval of the CQA Engineer, and at his own expense.

[END OF SECTION]

SECTION 02270

EROSION AND SEDIMENT CONTROL

EROSION AND SEDIMENT CONTROL

PART 1 GENERAL

1.01 SECTION INCLUDES

A. The Test Pad Contractor shall furnish all labor, materials, tools, supervision, transportation, installation equipment, and incidentals required to install and maintain all temporary erosion and sediment control measures and structures including, but not limited to silt fence, straw bales, and check dams throughout the duration of the project and removal of temporary measures and structures, when necessary.

1.02 RELATED SECTIONS

A. Section 01025 - Measurement and Payment

B. Section 01050 - Project Surveying

C. Section 02110 - Clearing, Grubbing, and Stripping

D. Section 02200 - General Earthwork

E. Section 02950 - Site Restoration

1.03 REFERENCES

A. Ohio Department of Natural Resources, Rainwater and Land Management, 2nd et., 1996.

B. Ohio Department of Transportation Construction and Material Specifications.

1.04 COMPLIANCE WITH REGULATIONS

A. It is the sole responsibility of the Test Pad Contractor to be completely familiar with and to follow all local, state, and federal regulations pertaining to the Work required in this Section.

PART 2 PRODUCTS

A. Silt fence and straw bales shall conform to material property criteria set forth by Ohio Department of Natural Resources, Rainwater and Land Management, 2nd et., 1996.

PART 3 EXECUTION

A. Prior to any ground disturbance, silt fence shall be installed at all locations shown in the TPWP and downslope of any other areas of ground disturbance.

B. In conjunction with top soil stripping (as specified in Section 02110) and construction of the runon diversion ditches (as specified in Section 02200), the Test Pad Contractor shall install the silt-fence and straw-bale filter check dam at the south end of the test pad construction site and at the locations along the diversion ditches shown in the TPWP.

C. The lateral extent and configuration of the check dams shall be as delineated in the TPWP.

D. The exact location of the check dams may be adjusted by the CQA Engineer if necessary to promote better drainage out of and away from the test pad construction site.

E. The CQA Engineer may specify additional temporary erosion and sediment controls (e.g., silt fence or straw bales) based on observed stormwater runoff and erosion during the test pad program. The Test Pad Contractor shall install additional measures as directed by the CQA Engineer.

[END OF SECTION]

SECTION 02950

SITE RESTORATION

SECTION 02950

SITE RESTORATION

PART 1 GENERAL

1.01 SECTION INCLUDES

A. The Test Pad Contractor shall furnish all labor, materials, tools, supervision, transportation, installation equipment, and incidentals required to restore the test pad construction site to the approximate pre-construction conditions, as described in the Test Pad Work Plan (TPWP) and the Specifications.

B. The Work of this Section shall include, but not be limited to: replacing the clay from Ted Pad No. 2 into the lower portion of the borrow excavation; replacing the clay from Test Pad No. 1 into the upper portion of the borrow excavation; removing the security fencing; removing the check dam at the south end of the site and the check dams in the diversion ditches; regrading the soil from the runon diversion ditches and remaining stockpiles to the approximate pre-existing grades; removing the access road and culvert; generally regrading the test pad construction to pre-construction grades; and seeding and mulching the regraded area.

1.02 RELATED AREAS

A. Section 01000 - General Requirements

B. Section 01025 - Measurement and Payment

C. Section 01050 - Project Surveying

D. Section 01700 - Project Closeout

E. Section 02270 - Temporary Erosion and Sediment Control

1.03 REFERENCES

A. Ohio Department of Natural Resources, Rainwater and Land Management 2nd ed., 1996.

1.04 COMPLIANCE WITH REGULATIONS

A. It is the sole responsibility of the Test Pad Contractor to be completely familiar with and to follow all local, state, and federal regulations pertaining to the Work required in this Section.

PART 2 PRODUCTS

A. Silt fence and straw or hay bales shall conform to material property criteria set forth by Ohio Department of Natural Resources, Rainwater and Land Management, 2dd ed., 1996.

B. Mulch and seed shall be of high quality and shall be applied in the quantities specified in Part 3 of this Specification. Mulch may consist, to some degree, of disassembled straw bales previously used for the check dam or other erosion and sediment control measures.

PART 3 EXECUTION

3.01 DECOMMISSIONING TEST PADS

A. After completion of all field-permeability testing and sampling for post-construction laboratory testing, the Test Pad Contractor shall remobilize the necessary equipment to the site for the purpose of decommissioning the test pads. The Test Pad Contractor shall remove the soil from Test Pad No. 2 and place it in the lower portion of the borrow excavation. The Test Pad Contractor shall then remove the soil from Test Pad No. 1 and place it in the upper portion of the borrow excavation.

B. Soil placed in the borrow excavation shall be placed in lifts not exceeding 1 ft in thickness and shall be tracked in with a minimum of one full coverage pass using a Caterpillar D6 dozer or an equivalent or heavier piece of construction equipment.

3.02 REMOVAL OF SECURITY FENCE

A. The Test Pad Contractor shall remove all security fence in a manner that allows the fence fabric and posts to be salvaged and reused by the Construction Contracts Manager.

B. The fence posts and fabric shall be rolled and stockpiled neatly outside of the test pad construction site next to the construction access road.

3.03 EROSION AND SEDIMENT CONTROL

A. Prior to regrading top soil or removal of runon control berms, the Test Pad Contractor shall install silt fence along the downgradient side of the check dam at the south end of the test pad construction site.

B. The Test Pad Contractor shall remove and dispose of all silt-fence materials previously used for the check dams at the south end of the test pad construction site at the location designated by the Construction Contracts Manager.

3.04 SITE REGRADING

A. After removing all temporary facilities (trailers, etc.), the Test Pad Contractor shall regrade the test pad construction site to ± 1.0 feet of the preconstruction conditions. Positive drainage shall be established throughout the test pad construction site.

B. The Test Pad Contractor shall survey the regraded area as specified in Section 01050 in order to verify that the re-established grades are similar (± 1.0 feet) to the preconstruction condition.

3.05 PERMANENT SEEDING AND MULCHING

A. Permanent seeding shall be accomplished in accordance with the Ohio Department of Natural Resources, Rainwater and Land Development, 2nd ed., 1996.

B. Prior to seeding, the test pad construction site shall be prepared by applying a minimum of 500 pounds per acre of 12-12-12 or 15-15-15 fertilizer. The fertilizer shall be worked into the soil in accordance with the requirements in Part 3.05A above.

C. Permanent seeding shall consist of the following mixture: 30 pounds per acre tall fescue and 20 pounds per acre crownvetch plus.

D. Mulching shall be performed in the seeding area to protect the seed and regraded top soil from erosion.
   1. Mulch shall consist of small grain straw (preferably wheat or rye) and shall be applied at the rate of two tons per acre or 100 pounds (two or three bales) per 1000 square feet.
   2. Mulch shall be spread uniformly by hand or mechanically so that the area is covered without damaging underlying seed growth.

E. The Test Pad Contractor shall inspect the test pad construction site once every two weeks for the two months immediately following seeding for the purpose of repairing areas and establishing adequate growth.
   1. If soil moisture is deficient, the Test Pad Contractor shall supply new seedings with adequate water for plant growth until the grass is firmly established.
   2. If the vegetative stand is inadequate or areas have been damaged, the Test Pad Contractor shall overseed and fertilize using at least half the rates of seed and fertilizer originally applied.

3.06 PROTECTION OF WORK

A. The Test Pad Contractor shall use all means necessary to protect all prior Work, including all materials and completed Work of other Sections.

B. In the event of damage, the Test Pad Contractor shall immediately make all repairs and replacements necessary, to the approval of the CQA Engineer, and at his own expense.

[END OF SECTION]

APPENDIX D

TECHNICAL NOTE ON SHELBY-TUBE SAMPLING

TECHNICAL NOTE

PROCEDURES FOR OBTAINING UNDISTURBED COMPACTED CLAY LINER SAMPLES

The purpose of this technical note is to provide written procedures for sampling, packaging, shipping, and laboratory testing of undisturbed samples of compacted clay liner.

Sampling

- Shelby tubes (2.8-in. (7-cm) diameter by 6-in. (15-cm) length) will be pushed using a hand-operated hydraulic jack utilizing available construction equipment as necessary.

- Each tube will be assigned a field sample number by the CQA Engineer; a record of the field sample number and the sample location will be maintained by the CQA Engineer.

- The top and bottom of the sample will be capped with paraffin; each tube will then be capped with a plastic cap, sealed with tape and placed in vertical containers. Samples will remain vertical until the samples that are selected for testing are formally packaged.

Packaging/Shipping

- All select samples will be packaged vertically in small barrels using air bubble and/or styrofoam packing material.

- The barrels will be explicitly marked "This Side Up" and "Handle With Care" to help ensure proper handling.

- The barrels will be shipped to the CQA laboratory the same day as sampling via Federal Express or other next day delivery service.

Laboratory Testing

- Upon arrival at the CQA laboratory the samples will be immediately extruded with the following tests performed:

  - Moisture Content (ASTM D 2216)
  - Dry Unit Weight (ASTM D 2937)
  - Hydraulic Conductivity (Permeability) (ASTM D 5084)

- The results of all permeability tests will be available approximately three to four days after sampling; results will be presented as the average of the final three to four values of hydraulic conductivity; the test will be terminated when the measured value of hydraulic conductivity has stabilized in accordance with guidelines presented in ASTM D 5084.

APPENDIX E

CQA STANDARD FIELD DOCUMENTATION FORMS

GEOSYNTEC CONSULTANTS

FERNALD ON-SITE DISPOSAL FACILITY

PERSONNEL DAILY LOG

PROJECT: FERNALD ON-SITE DISPOSAL FACILITY

LOCATION: FERNALD, OHIO PROJECT NO: _____ TASK NO.: _____

DESCRIPTION: TEST PAD PROGRAM DATE: _____ day _____ month 1995 year

NAME	REF ID	COMPANY	MON	TUES	WED	THURS	FRI	SAT	SUN

©GEO SYNTEC CONSULTANTS FILE NO. 1-03-PDL

SHEET NO. _____ OF _____

UNITED STATES
DEPARTMENT OF ENERGY

FERMCO
Restoration Management Corporation

FERNALD ENVIRONMENTAL
MANAGEMENT PROJECT
ON-SITE DISPOSAL FACILITY

SDRI TEST (ASTM D 5093)

PROJECT: FEMP ON SITE DISPOSAL FACILITY

LOCATION: FERNALD, OHIO PROJECT NO.: GE3900 TASK NO.: _____

DESCRIPTION: TEST PAD PROGRAM START DATE: _____ day _____ month _____ year

SDRI NO: _____ TEST PAD NO: _____ LANE NO: _____ QA ID: _____

DATE	TIME	TENSIOMETER READING - CENTIBARS											
		DEPTH - 6"				DEPTH - 12"				DEPTH - 18"			
		Group 1	Group 2	Group 3	Average	Group 1	Group 2	Group 3	Average	Group 1	Group 2	Group 3	Average

PROJECT: _____

TENSIOMETER TYPE: _____

NOTES:

000467

265

UNITED STATES
DEPARTMENT OF ENERGY

FERNALD ENVIRONMENTAL
MANAGEMENT PROJECT
ON-SITE DISPOSAL FACILITY

SDRI TEST (ASTM D 5093)

PROJECT: FEMP ON SITE DISPOSAL FACILITY

LOCATION: FERNALD, OHIO PROJECT NO.: GE3900 TASK NO.: _____

DESCRIPTION: TEST PAD PROGRAM START DATE: _____ day _____ month _____ year

SDRI NO: _____ TEST PAD NO: _____ LANE NO: _____ QA ID: _____

DATA FORM FOR SDRI TEST

Project: _____
Inner Ring Info: _____
Outer Ring Info: _____
Liner Thickness (cm): _____

I = Q/(At)

I = infiltration (cm/s)
Q = quantity of flow (ml)
t = interval of time (s)
A = area of inner ring (cm^2) _____

Date	Initial Time (s)	Final Time (s)	t Interval of Time (s)	Initial Wt of Bag (g)	Final Wt. of Bag (g)	Q Quan. of Flow (ml)	I Infiltration (cm/s)	Temp. (°C)	Water Depth (in.)

NOTES:

000168

265

GEOSYNTEC CONSULTANTS

FERNALD ON-SITE DISPOSAL FACILITY

SENIOR PERSONNEL SUMMARY LOG

PROJECT: FERNALD ON-SITE DISPOSAL FACILITY

LOCATION: FERNALD, OHIO PROJECT NO: _____ TASK NO.: _____

DESCRIPTION: TEST PAD PROGRAM DATE: _____ day _____ month 1995 year

NAME	REF ID	COMPANY	POSITION	COMMENTS

©GEO SYNTEC CONSULTANTS FILE NO. 1-02-SPS

SHEET NO. _____ OF _____

GEOSYNTEC CONSULTANTS

FERNALD ON-SITE DISPOSAL FACILITY

DAILY FIELD REPORT

PROJECT: FERNALD ON-SITE DISPOSAL FACILITY

LOCATION: FERNALD, OHIO PROJECT NO: _____ TASK NO.: _____

DESCRIPTION: TEST PAD PROGRAM DATE: _____ day _____ month 1995 year

CONTRACTOR: _____

WEATHER: _____

COPY TO: _____ PER: _____ HRS: _____

©GEO SYNTEC CONSULTANTS FILE NO. 1-04-DFR

SHEET NO. _____ OF _____

GEOSYNTEC CONSULTANTS

FERNALD ON-SITE DISPOSAL FACILITY

MEETING SIGN-IN SHEET

PROJECT: FERNALD ON-SITE DISPOSAL FACILITY

LOCATION: FERNALD, OHIO PROJECT NO: _____ TASK NO.: _____

DESCRIPTION: TEST PAD PROGRAM DATE: _____ day _____ month 1995 year

SUBJECT: _____

NAME	ORGANIZATION	TELEPHONE

NOTE: FOR FIRST TIME ATTENDEES, PLEASE ATTACH A BUSINESS CARD.

©GEO SYNTEC CONSULTANTS FILE NO. 1-17-MSS

SHEET NO. _____ OF _____

GEOSYNTEC CONSULTANTS

FERNALD ON-SITE DISPOSAL FACILITY

FIELD CALIBRATION OF BULK DENSITY OF SAND FOR SAND CONE (ASTM D 1556)

PROJECT: FERNALD ON-SITE DISPOSAL FACILITY

LOCATION: FERNALD, OHIO PROJECT NO.: _____ TASK NO.: _____

DESCRIPTION: TEST PAD PROGRAM DATE: _____ day _____ month 1995 year

SAND SOURCE: _____ QA ID: _____

SAND SHALL BE UNIFORM WITH 100% PASSING THE NO. 10 SIEVE, LESS THEN 3% PASSING THE NO. 60 SIEVE, AND UNIFORMITY COEFFICIENT $Cu = D_{60} / D_{10}$ LESS THAN 2.0. A MINIMUM OF 3 BULK DENSITY DETERMINATIONS SHALL BE MADE ON EACH BAG OF SAND USED. THE VARIATION BETWEEN ANY TRIAL AND THE AVERAGE SHALL NOT BE GREATER THAN 1% OF THE AVERAGE. BULK-DENSITY CALIBRATION SHALL BE CONDUCTED REGULARLY THROUGHOUT THE PROJECT. (INTERVALS SHOULD NOT EXCEED 14 DAYS)

			TRIAL 1	TRIAL 2	TRIAL 3	TRIAL 4	TRIAL 5
A	INITIAL WEIGHT OF CONTAINER	(lbs)					
B	FINAL WEIGHT OF SAND CONTAINER	(lbs)					
C	WEIGHT OF SAND = B-A	(lbs)					
D		(ft^3)					
E	VOLUME OF CONTAINER (1)	(ft^3)					
F	DENSITY OF SAND = C/E	(pcf)					

AVERAGE BULK UNIT WEIGHT (DENSITY) OF SAND (pcf) = _____ (NOTE: OTTAWA SAND DENSITY IS APPROXIMATELY 95 TO 98 LB/FT^3)

NOTE: (1) THE VOLUME OF THE CONTAINER MUST BE DETERMINED. A 6-in. DIAMETER MOLD MUST HAVE A CAPACITY OF 1/13.333 ± 0.0009 ft^3. THE MOLD VOLUME SHOULD BE CALCULATED FROM THE AVERAGE OF AT LEAST SIX INTERNAL DIAMETER AND THREE VERTICAL HEIGHT MEASUREMENTS MADE TO THE NEAREST 0.001 in. OR FROM THE AMOUNT OF WATER REQUIRED TO COMPLETELY FILL THE MOLD AND CORRECTED FOR TEMPERATURE VARIANCE.

GEOSYNTEC CONSULTANTS

FERNALD ON-SITE DISPOSAL FACILITY

FIELD NUCLEAR MOISTURE/DENSITY TEST LOG (ASTM D 3017 AND ASTM D 2922)

PROJECT: FERNALD ON-SITE DISPOSAL FACILITY

LOCATION: FERNALD, OHIO PROJECT NO.: _____ TASK NO.: _____

DESCRIPTION: TEST PAD PROGRAM DATE: _____ day _____ month 1995 year

SPECIFICATION REQUIREMENTS

SOURCE: _____ MATERIAL TYPE: FILL / SUBGRADE / SUBBASE / CLAY / OTHER: _____ LIFT THICKNESS (LOOSE/COMPACTED): _____
(CIRCLE ONE)

% COMPACTION: _____ MOISTURE RANGE: _____ ASTM D 698: A B C / ASTM D 1557: A B C _____
(CIRCLE ONE)

NUCLEAR GAUGE TYPE: _____ NUCLEAR GAUGE SERIAL NO. _____ COR. FACTOR: _____

TEST NO.	TEST LOCATION	PROBE DEPTH/ ELEV/ LIFT NO.	LAB RESULTS		FIELD TEST RESULTS						RETEST NO.	QA ID
			OMC (%)	MAX DRY UNIT WT (PCF)	FMC (%)	WET UNIT WT (PCF)	DRY UNIT WT (PCF)	PERCENT COMPACT (%)	PASS	FAIL		

265

0001173

©GEO SYNTEC CONSULTANTS FILE NO.: 2-20-FNM

SHEET NO. _____ OF _____

GEOSYNTEC CONSULTANTS

FERNALD ON-SITE DISPOSAL FACILITY

SUMMARY OF FIELD DENSITY TEST

PROJECT: FERNALD ON-SITE DISPOSAL FACILITY

LOCATION: FERNALD, OHIO PROJECT NO.: _____ TASK NO.: _____

DESCRIPTION: TEST PAD PROGRAM DATE: _____ day _____ month 1995 year

MATERIAL TYPE: _____ QA ID: _____

DATE OF TEST (day/mo)	TEST NO.	TEST LOCATION	LAB RESULTS			TYPE OF TEST		FIELD TEST RESULTS				PERCENT COMPACT (%)	PASS	FAIL	RETEST NO.
			SAMPLE NO.	MAX UNIT WT (pcf)	O.M.C. (%)	ASTM D 2922	ASTM D 1556	DEPTH/ ELEV (ft)	WET UNIT WT (pcf)	DRY UNIT WT (pcf)	FMC (%)				

©GEO SYNTEC CONSULTANTS FILE NO.: 2-21-SFD

SHEET NO. _____ OF _____

265

000178

GEOSYNTEC CONSULTANTS

GEOMECHANICS AND ENVIROMENTAL LABORATORY

LABORATORY TEST REQUEST

(FOR INTERNAL USE ONLY)

PROJECT: _____

LOCATION: _____ PROJECT NO.: _____ TASK NO.: _____

DESCRIPTION: _____ DATE: _____ day _____ month _____ year

SOURCE: _____ MAT. VISUAL DESC.: _____ APPLICATION: _____

SITE SAMPLE ID: _____

SHIPPER: _____ REQUESTED BY: _____ DATE: _____ GEL SAMPLE NO.: _____

TASK	AS RECEIVED MOISTURE CONTEST ☐ ASTM D 2216 (%)	PERCENT PASSING NO. 200 ☐ ASTM D 1140 (%)	SPECIFIC GRAVITY ☐ ASTM D 854	GRAIN SIZE ASTM D 422		ATTEBERG LIMITS ASTM D 4318			SOIL CLASSIFICATION ASTM D 2487	LOI ☐ ASTM C 311 (%)	CARBO CONT. ☐ ASTM D3042 (%)	COMPACTION ASTM D 698 ☐ ASTM D 1557 ☐ A B C		HYDRAULIC CONDUCTIVITY FHFW (ASTM D 5084) ☐ CHRW (ASTM D 2434) ☐ TUBE SAMPLE ☐ REMOLDED SAMPLE ☐ γ_d = ____ % γ_{dmax}; W=W_{opt} ____ (%) γ_d = ____ (pcf); W= ____ (%)			
				SIEVE ☐	HYDROMETER ☐	LL ☐ (%)	PL ☐ (%)	PI ☐				MAX DRY UNIT WT. (pcf)	OPT. MOIST. CONT. (%)	DRY UNIT WT. (pcf)	MOIST. CONT. (%)	K (cm/sec) at σ'_c = ____ (psi) I= ____	
DEADLINE																	

REMARKS: PERFORMANCE TEST ☐ CONFORMANCE TEST ☐

265

0001175

GEOSYNTEC CONSULTANTS

FERNALD ON-SITE DISPOSAL FACILITY

NUCLEAR GAUGE STANDARD COUNT LOG (ASTM D 2922 & ASTM D 3017)

PROJECT: FERNALD ON-SITE DISPOSAL FACILITY

LOCATION: FERNALD, OHIO PROJECT NO: _____ TASK NO.: _____

DESCRIPTION: TEST PAD PROGRAM DATE: _____ day _____ month 1995 year

NUCLEAR GAUGE MODEL: _____ SERIAL NO.: _____

DATE ARRIVED ON SITE: _____ DATE DEPART SITE: _____

DATE (day/mo)	MOISTURE COUNT	DENSITY COUNT	PASS/ FAIL	QA ID	DATE (day/mo)	MOISTURE COUNT	DENSITY COUNT	PASS/ FAIL	QA ID

GEOSYNTEC CONSULTANTS

FERNALD ON-SITE DISPOSAL FACILITY

LABORATORY DETERMINATION OF MOISTURE CONTENT OF SOIL

PROJECT: FERNALD ON-SITE DISPOSAL FACILITY

LOCATION: FERNALD, OHIO PROJECT NO: _____ TASK NO.: _____

DESCRIPTION: TEST PAD PROGRAM DATE: _____ day _____ month 1995 year

SOURCE: _____ MATERIAL TYPE: _____ SAMPLE NO.: _____ QA ID: _____

OVEN METHOD (ASTM D 2216)

RECOMMENDED MASS OF MOIST SAMPLE WEIGHT

100% PASING THE NO. 10 (2-mm) SIEVE	20 grams
100% PASSING THE NO. 4 (4.75-mm) SIEVE	100 grams
100% PASSING THE NO. 3/8-in. (9.5-mm) SIEVE	500 grams
100% PASSING THE NO. 3/4-in. (19-mm) SIEVE	2.5 kilograms

	TARE NO.					
A	WT. OF TARE					
B	WT. OF WET SOIL & TARE					
C	WT. OF DRY SOIL & TARE					
D	WT. OF WATER = B-C					
E	WT. OF DRY SOIL = C-A					
F	MOISTURE CONTENT = (D/E) X 100					

MICROWAVE METHOD (ASTM D 4643)

RECOMMENDED MASS OF MOIST SAMPLE WEIGHT

90% PASSING THE NO. 10 (2-mm) SIEVE	100 TO 200 grams
90% PASSING THE NO. 4 (4.75-mm) SIEVE	200 TO 500 grams
90% PASSING THE 3/4-in. (19-mm) SIEVE	500 TO 1000 grams

INITIAL SETTING TO BE AT 3.0 MINUTES, CONTINUE DRYING SAMPLE AT 1.0 MINUTE SETTING UNTIL MOISTURE CONTENT VARIATION BETWEEN SETTINGS IS LESS THAN 0.1%

	TARE NO.					
A	WT. OF TARE					
B	WT. OF WET SOIL & TARE					
C	WT. OF DRY SOIL & TARE					
D	WT. OF WATER = B-C					
E	WT. OF DRY SOIL = C-A					
F	MOISTURE CONTENT = (D/E) X 100					

GEOSYNTEC CONSULTANTS

FERMCO Restoration Management Corporation

FERNALD ON-SITE DISPOSAL FACILITY

MOISTURE-DENSITY RELATIONSHIP

PROJECT: FERNALD ON-SITE DISPOSAL FACILITY

LOCATION: FERNALD, OHIO PROJECT NO: _____ TASK NO.: _____

DESCRIPTION: TEST PAD PROGRAM DATE: _____ day _____ month 1995 year

SOURCE: _____ MATERIAL TYPE: _____ SAMPLE NO.: _____ QA ID: _____

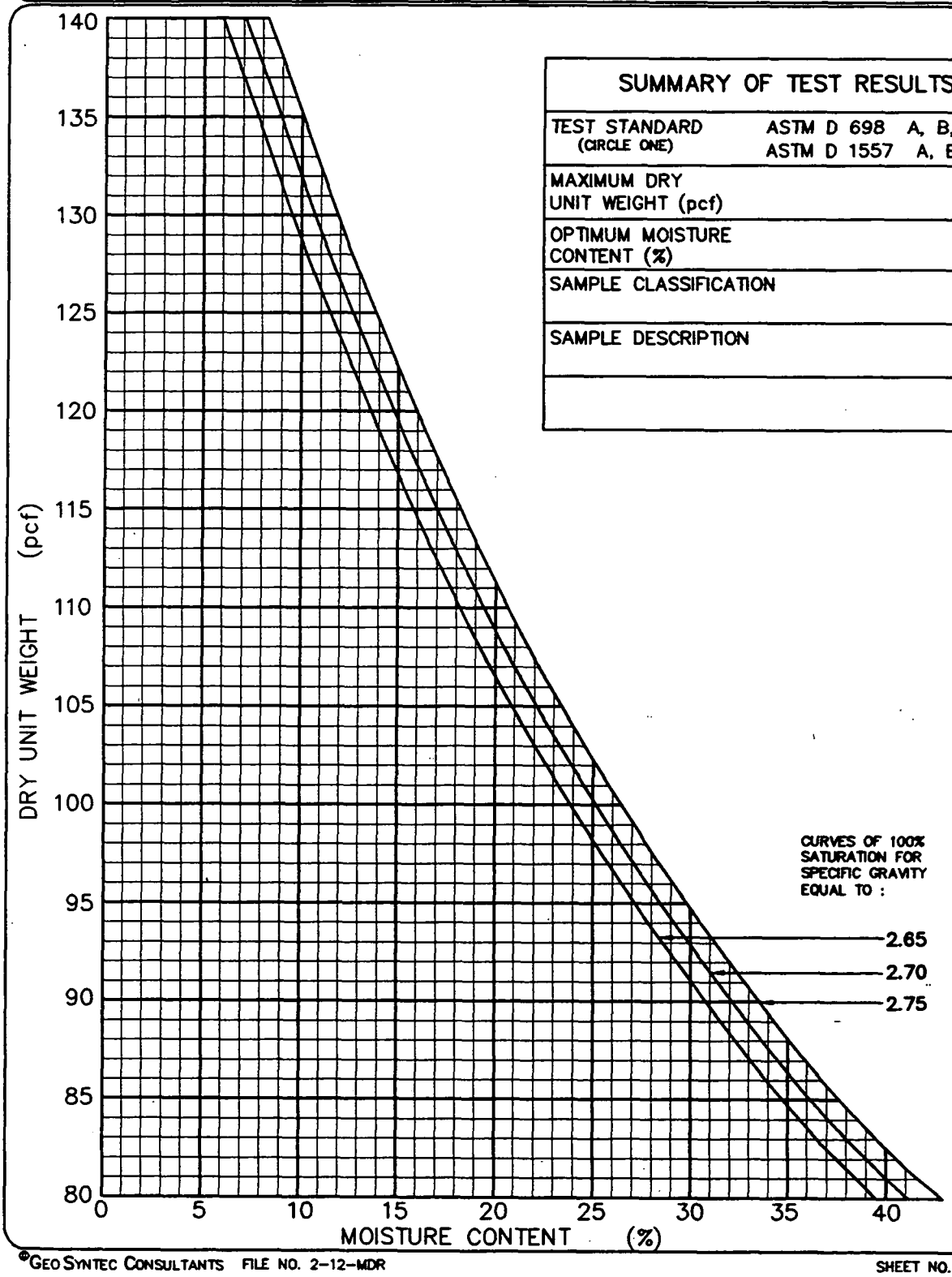

SUMMARY OF TEST RESULTS	
TEST STANDARD (CIRCLE ONE)	ASTM D 698 A, B, C ASTM D 1557 A, B, C
MAXIMUM DRY UNIT WEIGHT (pcf)	
OPTIMUM MOISTURE CONTENT (%)	
SAMPLE CLASSIFICATION	
SAMPLE DESCRIPTION	

000178

©GEOSYNTEC CONSULTANTS FILE NO. 2-12-MDR

SHEET NO. _____ OF _____

GEOSYNTEC CONSULTANTS

FERNALD ON-SITE DISPOSAL FACILITY

FIELD SAND CONE DENSITY TEST (ASTM D 1556)

PROJECT: FERNALD ON-SITE DISPOSAL FACILITY

LOCATION: FERNALD, OHIO PROJECT NO: _____ TASK NO.: _____

DESCRIPTION: TEST PAD PROGRAM DATE: _____ day _____ month 1995 year

SOURCE: _____ MATERIAL TYPE: _____ QA ID: _____

SPECIFICATION REQUIREMENTS:

MATERIAL TYPE: (CIRLCLE ONE) FILL / SUBGRADE / SUBBASE / CLAY / OTHER: _____

% COMPACTION: _____ MOISTURE CONTENT RANGE: _____

TEST LOCATION: _____ TEST NO.: _____

FIELD TEST DATA – ASTM D 1556

A	BULK UNIT WT. OF SAND (SEE FORM 2-12-FLC)	(pcf)		H	WT. OF WET SOIL & TARE FROM HOLE	(lbs)	
B	INITIAL WT. OF SAND & JAR	(lbs)		I	WT. OF TARE NO.: _____	(lbs)	
C	FINAL WT. OF SAND & JAR	(lbs)		J	WT. OF WET SOIL FROM HOLE = H-I	(lbs)	
D	WT. OF SAND IN FUNNEL & HOLE = B-C	(lbs)		K	WET UNIT WT. = J/G	(pcf)	
E	WT. OF SAND IN FUNNEL (1)	(lbs)		M	DRY UNIT WT. = K/[1+(T/100)]	(pcf)	
F	WT. OF SAND IN HOLE = D-E	(lbs)		N	PERCENT COMPACTION = M/U	(%)	
G	VOLUME OF HOLE = F/A	(ft^3)					

NOTE: (1) THE WEIGHT OF SAND IN FUNNEL (E) IS OBTAINED BY WEIGHING THE SAND, A MINIMUM OF THREE TIMES, IN THE APPARATUS BEFORE AND AFTER THE APPARATUS HAS BEEN TURNED OVER ON THE BASE PLATE ALONG A FLAT SURFACE WITH THE SAND BEING EXPENDED.

FIELD MOISTURE CONTENT – ASTM D 2216

O	WT. OF TARE NO. _____	(grams)		R	WT. OF WATER = P-Q	(grams)	
P	WT. OF WET SOIL & TARE	(grams)		S	WT. OF DRY SOIL = Q-O	(grams)	
Q	WT. OF DRY SOIL & TARE	(grams)		T	MOISTURE CONTENT = (R/S)X100	(%)	

COMPACTION TEST DATA

SAMPLE REFERENCE NO.			U	MAXIMUM DRY UNIT WT.	(pcf)
TEST STANDARD USED			V	OPTIMUM MOISTURE CONTENT	(%)

COMPARISON WITH NUCLEAR GAUGE – ASTM D 2922 AND D 3017

TEST NO.			MOISTURE CONTENT	(%)	
WET UNIT WT.	(pcf)		DRY UNIT WT.	(pcf)	

GEOSYNTEC CONSULTANTS

FERNALD ON-SITE DISPOSAL FACILITY

PHOTOGRAPHIC LOG

PROJECT: FERNALD ON-SITE DISPOSAL FACILITY

LOCATION: FERNALD, OHIO PROJECT NO: _____ TASK NO.: _____

DESCRIPTION: TEST PAD PROGRAM DATE: _____ day _____ month 1995 year

REFERENCE NO.	DATE (day/month)	DESCRIPTION

(30)

APPENDIX F

DATA QUALITY OBJECTIVES

DATA QUALITY OBJECTIVE LOGIC FLOW TEST PAD FOR CLAY LINER AND CAP ON-SITE DISPOSAL FACILITY

1. Problem Statement

The preferred remedial alternative for Operable Units 2, 3, and 5 includes the on-site disposal of remediation material. The design and construction of a disposal facility is required as a part of the Operable Units 2, 3, and 5 remediation action plans and the Records of Decision. A critical part of the disposal facility design and construction is a low-permeability liner and cap consisting of clay layers constructed from on-site borrow sources.

In support of the design and construction of the On-Site Disposal Facility (OSDF), a test pad simulating the construction of the low-permeability clay liner and cap is required to evaluate the equipment, techniques, and soil conditions to be used. The project specific plan (Test Pad Work Plan (TPWP)) provides the details of the conduct, evaluation, and reporting of the test pad program.

2. Identification of a Decision that Addresses the Problem

The information generated by the test pad for clay liner and cap is essential in establishing the requirements of OSDF technical specifications for equipment, techniques, and soil conditions required for construction of the low-permeability clay layers. The hydraulic conductivity of the low-permeability clay layers must be less than or equal to 1×10^{-7} cm/sec. The data obtained through this test pad program will be used to verify suitability of on-site borrow sources in the construction of the compacted clay liner and cap components in the OSDF to the required hydraulic conductivity. If the test pad program, as set forth in the TPWP, does not verify the suitability of the on-site clay, then additional test pads may be constructed using the same material (but different construction techniques), or possibly a different borrow source.

3. Identification of Inputs that Affect the Decision

The design and construction parameters needed to establish the requirements of the OSDF technical specifications will be measured through a combination of field and laboratory testing and observations. Field testing will include:

Test Description	Standard
SDRI	ASTM 5093
Density	ASTM 2922 and 1556
Moisture Content	ASTM 3017 and 2216
Particle Size	ASTM 422
Atterberg Limits	ASTM 4318
Compaction	ASTM 698

Geotechnical laboratory testing will include:

Test Description	Standard
Hydraulic Conductivity	ASTM 5084
Density	ASTM 2937
Moisture Content	ASTM 2216
Particle Size	ASTM 422
Atterberg Limits	ASTM 4318
Compaction	ASTM 698

Observations to be performed in the field include adequate and appropriate equipment and techniques for:

- spreading loose clay layers;
- moisture conditioning clay;
- compaction of clay to required range of dry density and moisture content; and

- preparation of clay surface for layer bonding.

4. Specification of the Domain of the Decision

The test pad construction will occur within the footprint of the OSDF and will incorporate soils representative of materials to be used for the construction of the clay liner and cap components in the OSDF.

5. Development of Logic Statement

As a result of the test pad construction, appropriate equipment, techniques, and soil conditions can be incorporated into the OSDF technical specifications. If the test pad construction does not verify the suitability of on-site clay materials for use in construction of the OSDF clay liner and cap components, then additional soil testing and/or exploration will be required prior to design completion. The data generated through construction and testing of the test pad is a critical element in the verification of the OSDF design.

6. Establish Constraints on Uncertainty

The probability of making an incorrect decision based on the study findings is considered remote. The geotechnical science is relatively well developed and the general relationships between hydraulic conductivity, density, water content, Atterberg limits, and soil classification are well understood. Any substantial error in one test would cause that test result to be immediately suspect when examined in the context of other test results. The measurement of identical parameters in both the field and laboratory and by different testing methods also reduces the probability of incorrect decisions. The tests will be conducted in accordance with procedures set forth in ASTM standards, with the applicable ASTM precision and bias statements considered in interpreting the results.

7. Optimizing

The test pad program will be performed in accordance with all applicable ASTM standards. Data will be checked by the OSDF design engineer prior to incorporation into the OSDF technical specifications.

8. Summary

The objective of the test pad program is to provide information on equipment, technology, and soil conditions to be used in the construction of the clay liner and cap component of the OSDF. The geotechnical tests will be conducted in accordance with applicable ASTM standards as described in the project specific plan.

FEMP TPWP
DQO SUMMARY FORM

1.A. Task/Description:

CRU #:

1.B. Project Phase: (Place an "x" in the appropriate selection.)

☐ RI ☐ FS ☑ RD ☐ RA ☐ R,A ☐ Other (specify): _____

1.C. DQO No.: **DQO Reference No.:**

2. Media Characterization: (Place an "x" in the appropriate selection.)

☐ Air ☐ Biological ☐ Groundwater ☐ Sediment ☑ Soil
☐ Waste ☐ Wastewater ☐ Surface water ☐ Other (specify): _____

3. Data Use with Analytical Support Level (A-E):
(Check the appropriate Analytical Support Level selection(s) beside each applicable Data Use.)

Site Characterization
☐ A ☐ B ☐ C ☐ D ☐ E

Risk Assessment
☐ A ☐ B ☐ C ☐ D ☐ E

Evaluation of Alternatives
☐ A ☐ B ☐ C ☐ D ☐ E

Engineering Design
☐ A ☐ B ☐ C ☐ D ☑ E

Monitoring During Remediation Activities
☐ A ☐ B ☐ C ☐ D ☐ E

Other (explain): _____
☐ A ☐ B ☐ C ☐ D ☐ E

4.A. Drivers: Draft Remedial Design Work Plan for Remedial Actions at Operable Unit 2 [DOE, 1995d]; Design Criteria Package, On-Site Disposal Facility [GeoSyntec, 1995].

4.B. Objective: The objective of the test pad program is to provide information regarding the hydraulic conductivity and compaction characteristics of the soils (upper horizon brown clay and low horizon brown clay) that will be used for construction of the OSDF compacted clay liner and cap. The information obtained during the test pad program will be used to qualify the upper horizon brown clay and lower horizon brown clay borrow sources (i.e., OSDF area and East Field borrow area by demonstrating that the brown clay can meet the criteria for compacted clay liner and cap materials, and establish procedures for construction using these materials.

FEMP TPWP
DQO SUMMARY FORM

DQO Number: [redacted]

5. Site Information (Description):

The test pad construction site is a rectangular area with plan dimensions of 300 ft by 250 ft. This site is located approximately 150 ft east of the North Entrance Road. The test pad construction site has been designed to accommodate two test pads, a borrow excavation, trailers and vehicle parking, stockpiles, and equipment to divert storm water from running onto the test pad construction site and to control sediment from running off the test pad construction site. A temporary construction access road will provide access from the North Entrance Road and security fencing will be installed around the entire perimeter of the test pad construction site.

6.A. Data Types with appropriate Analytical Support Level Equipment Selection and SCQ Reference:
(Place an "x" inside the appropriate box or boxes to select the type of analysis or analyses required. Then select the type of equipment to perform the analysis, if appropriate. Please include a reference to the SCQ Section.)

1. ☐ pH
   ☐ Temperature
   ☐ Specific Conductance
   ☐ Dissolved Oxygen
2. ☐ Uranium
   ☐ Full Radiologic
   ☐ Metals
   ☐ Cyanide
   ☐ Silica
3. ☐ BTX
   ☐ TPH
   ☐ Oil/Grease
4. ☐ Cations
   ☐ TOC
   ☐ TCLP
   ☐ CEC
   ☐ COD
5. ☐ VOA
   ☐ ABN
   ☐ Pesticides
   ☐ PCB
6. Other (specify)
   ☑ Geotechnical (see TPWP)
   _____

6.B. Equipment Selection and SCQ Reference:

Equipment Selection	Refer to SCQ Section
ASL A _____	SCQ Section: _____
ASL B _____	SCQ Section: _____
ASL C _____	SCQ Section: _____
ASL D _____	SCQ Section: _____
ASL E See TPWP	SCQ Section: 5.3.3

FEMP TPWP
DQO SUMMARY FORM

DQO Number: _____

7.A. Sampling Methods: (Place an "x" in the appropriate selection box.)

☐ Biased ☐ Composite ☐ Environmental ☑ Grab ☐ Grid
☐ Intrusive ☐ Non-Intrusive ☐ Phased ☐ Source

Other (specify): ☑ Undisturbed Intrusive

7.B. Sample Work Plan Reference: (List the samples required. Reference the work plan or sampling plan guiding the sampling activity, as appropriate.)

The TPWP lists the samples required and describes the sampling activity.

Background Samples: Samples have previously been collected from the area.

7.C. Sample Collection Reference: (Please provide a specific reference to the SCQ Section and subsection guiding sampling collection procedures.)

Background Samples: Appendix K

8.0 Quality Control Samples: (Place an "x" in the appropriate selection box.)

8.A. Field Quality Control Samples:

☐ Trip Blanks ☐ Container Blanks ☐ Field Blanks
☑ Duplicate Samples ☐ Equipment Rinsate Samples ☐ Split Samples
☐ Preservation Blanks ☐ Performance Evaluation Samples ☐ Other (specify): _____

8.B. Laboratory Quality Control Samples:

☐ Method Blank ☐ Matrix/Duplicate/Replicate ☐ Matrix Spike ☐ Surrogate Spikes

Other (specify): _____

9. Other: Please provide any other germane information that may impact the data quality or gathering of this particular objective, task, or data use.

See TPWP.

APPENDIX G

HEALTH AND SAFETY PLAN

Health and Safety Plan to be provided under separate cover.

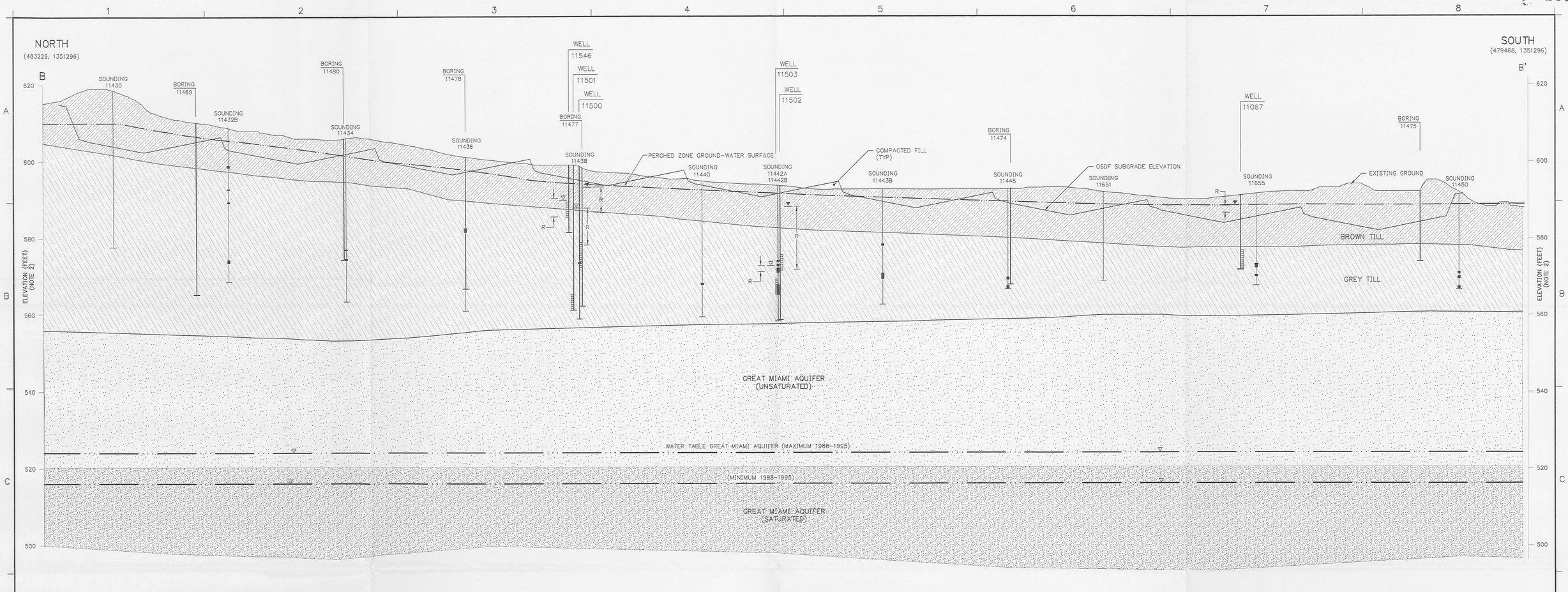

GEOLOGIC CROSS SECTION

HORIZONTAL SCALE: 1" = 100'
VERTICAL SCALE: 1" = 10'

LEGEND

WELL 11492 — MONITORING WELL

BORING 11468 — GEOTECHNICAL BORING

SOUNDING 11468 — CONE PENETROMETER TEST (CPT) SOUNDING

INTERPRETED LOCATION OF COARSE GRAINED MATERIAL OBTAINED FROM CONE PENETROMETER SOUNDING

BROWN TILL - PREDOMINANTLY SILT/CLAY (CL), MIXTURES WITH LOCALIZED POCKETS OF (CH) AND (ML), SOME CLAYEY AND SILTY SAND AND SCATTERED GRAVEL. TYPICALLY STIFF TO VERY STIFF, AND MOIST. SOME LOCAL SAND LENSES. OPEN 1/8" FRACTURES.

GRAY TILL - PREDOMINANTLY SILT/CLAY (CL), MIXTURES WITH POCKETS OF SAND (SW), CLAYEY SAND (SC) AND SCATTERED GRAVEL. TYPICALLY VERY STIFF TO LOCALLY HARD, AND MOIST. SCATTERED SAND LENSES.

GREAT MIAMI AQUIFER - SAND/GRAVEL MIXTURES, VERY DENSE TO HARD

WATER LEVEL MEASURED BETWEEN 20 AND 29 MARCH 1995 IN MONITORING WELL SCREENED ACROSS BROWN TILL/GRAY TILL INTERFACE

WATER LEVEL MEASURED IN MONITORING WELL SCREENED IN GRAY TILL OR GREAT MIAMI AQUIFER

MONITORING WELL SCREEN INTERVAL

R — RANGE OF WATER LEVEL FLUCTUATION IN THE PERCHED WATER ZONE BETWEEN OCTOBER 1994 AND MARCH 1995

NOTES:

1. THIS DRAWING OBTAINED FROM SHEET X-14, "GEOLOGIC SECTION B-B", REVISION D, OF THE INTERMEDIATE DESIGN PACKAGE, ON-SITE DISPOSAL FACILITY, GEOSYNTEC CONSULTANTS.
2. ELEVATIONS ARE IN FEET ABOVE SEA LEVEL DATUM. (NOTE: "SEA LEVEL DATUM" REFERS TO THE NATIONAL GEODETIC VERTICAL DATUM [NGVD].)
3. GRID COORDINATE SYSTEM CORRESPONDS TO STATE PLANAR NORTH AMERICAN DATUM (NAD) 1983 OHIO SOUTH.
4. GEOLOGIC SECTION DATA OBTAINED FIGURE 2-4, "COARSE GRAINED MATERIAL INTERPRETED FROM CONE PENETROMETER RESULTS", OF THE "PREDESIGN INVESTIGATION AND SITE SELECTION REPORT FOR THE ON SITE DISPOSAL FACILITY, FERNALD ENVIRONMENTAL MANAGEMENT PROJECT," U.S. DEPARTMENT OF ENERGY, JULY 1995.
5. MONITORING WELL AND PERCHED ZONE INFORMATION OBTAINED FROM TABLE A-4, "BORING DEPTH AND SCREENED INTERVALS FOR PHASE II WELLS", AND TABLE A-19, "SUMMARY OF WATER LEVEL DATA, BROWN/GRAY TILL INTERFACE WELLS, MARCH 29, 1995", OF THE "PREDESIGN INVESTIGATION AND SITE SELECTION REPORT FOR THE ON SITE DISPOSAL FACILITY, FERNALD ENVIRONMENTAL MANAGEMENT PROJECT," U.S. DEPARTMENT OF ENERGY, JULY 1995.
6. GEOTECHNICAL BORING AND CONE PENETROMETER TEST (CPT) SOUNDING LOCATIONS OBTAINED FROM APPENDIX B, "BORING AND CPT COORDINATES", OF THE "GEOTECHNICAL INVESTIGATION REPORT FOR THE ON-SITE DISPOSAL FACILITY, OPERABLE UNIT 2, PROJECT ORDER 140, REVISION A," PARSONS, SEPTEMBER 1995.
7. PERCHED ZONE POTENTIOMETRIC SURFACE OBTAINED FROM FIGURE 2-20, "PERCHED GROUNDWATER CONTOURS FOR WELLS SCREENED ACROSS THE BROWN/GRAY INTERFACE" OF THE "PREDESIGN INVESTIGATION AND SITE SELECTION REPORT FOR THE ON SITE DISPOSAL FACILITY, FERNALD ENVIRONMENTAL MANAGEMENT PROJECT," U.S. DEPARTMENT OF ENERGY, JULY 1995.
8. GREAT MIAMI AQUIFER WATER TABLE INFORMATION OBTAINED FROM FIGURE 3-51, "MAXIMUM GROUNDWATER ELEVATIONS, TYPE 2 WELLS, JUNE 1990", AND FIGURE 3-52, "MINIMUM GROUNDWATER ELEVATIONS, TYPE 2 WELLS, NOVEMBER 1988", OF THE "REMEDIAL INVESTIGATION REPORT FOR OPERABLE UNIT 5, FERNALD ENVIRONMENTAL MANAGEMENT PROJECT, REMEDIAL INVESTIGATION AND FEASIBILITY STUDY", U.S. DEPARTMENT OF ENERGY, MARCH 1995.

TEST PAD WORK PLAN

REV. NO.	DATE	DESCRIPTION	DES BY	DR BY	CHK BY	RVW BY	APP BY

100 50 0 100 200 — SCALE IN FEET

10 5 0 10 20 — SCALE IN FEET

OWNER/FACILITY:
UNITED STATES DEPARTMENT OF ENERGY
FERNALD ENVIRONMENTAL MANAGEMENT PROJECT

CLIENT:
FERMCO — FERNALD ENVIRONMENTAL RESTORATION MANAGEMENT CORPORATION

PROJECT:
ON-SITE DISPOSAL FACILITY

TITLE:
GEOLOGIC CROSS SECTION
OSDF AREA

000039

THIS DRAWING MAY NOT BE ISSUED FOR PROJECT TENDER OR CONSTRUCTION, UNLESS SEALED.

SIGNATURE

DATE

SEAL

GEOSYNTEC CONSULTANTS
1100 LAKE HEARN DRIVE
ATLANTA, GEORGIA 30342 USA

FERMCO SUBCONTRACT NO.: 95PS005028
FERMCO DRAWING NO.:
FIGURE NO. 3-1
PROJECT NO. GE3900-4.1
DOCUMENT NO. F95-E012
FILE NO. F95-E012.DWG

M:\FERM-FIG\3900-04\F95E012 Thu Apr 11 18:16:34 1996

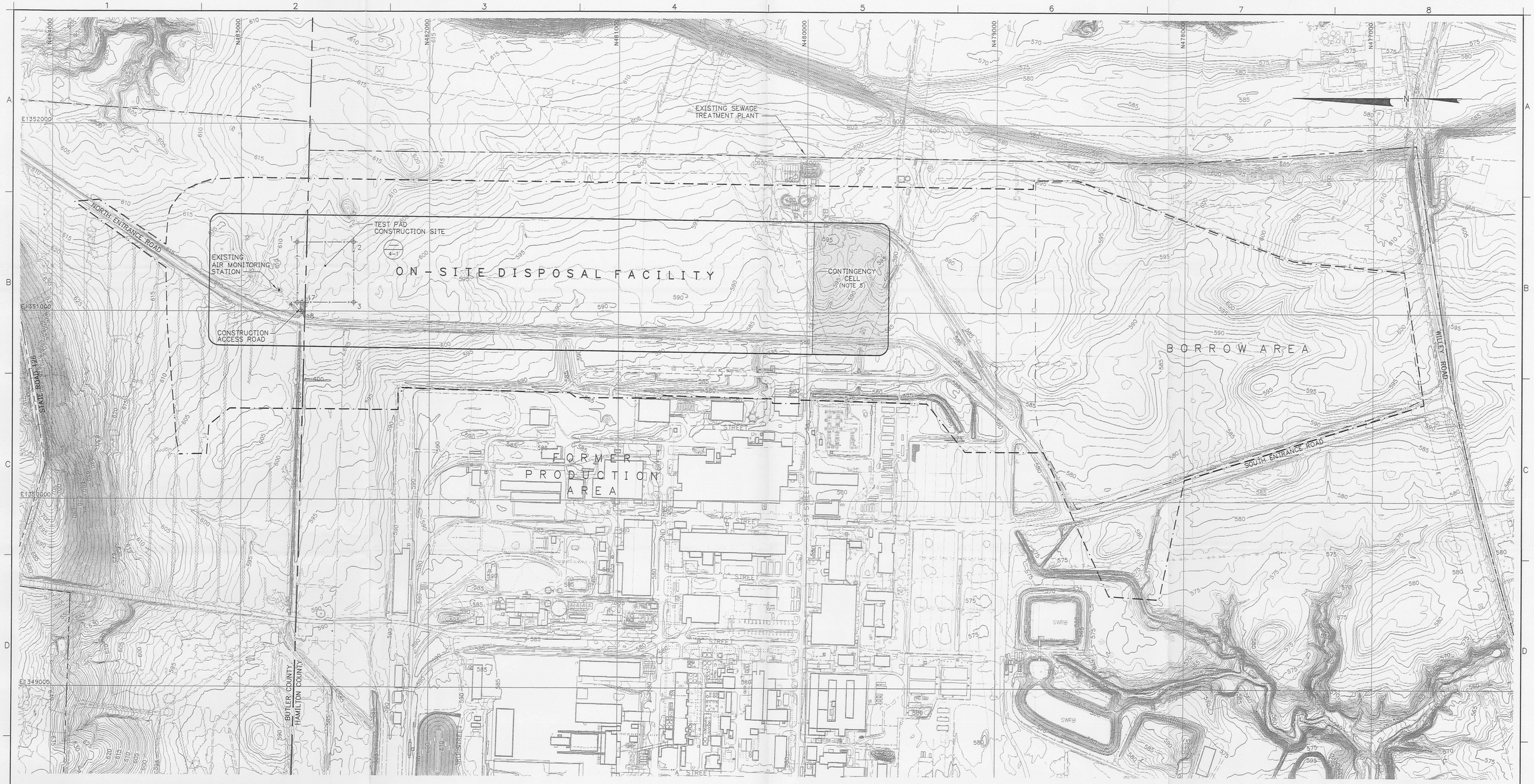

LEGEND

600	EXISTING GROUND ELEVATION (FEET)
	BUTLER COUNTY/HAMILTON COUNTY LINE
	FEMP PROPERTY LINE
	BATTERY LIMIT
	IMPACTED MATERIAL DISPOSAL LIMIT
	BORROW AREA LIMIT
	SECURITY FENCE
	CONSTRUCTION CONTROL POINT

NOTES:

1. TOPOGRAPHIC MAP BASED ON 1992 SITE FLYOVER.
2. ELEVATIONS ARE IN FEET ABOVE SEA LEVEL DATUM. (NOTE: "SEA LEVEL DATUM" REFERS TO THE NATIONAL GEODETIC VERTICAL DATUM [NGVD].)
3. GRID COORDINATE SYSTEM CORRESPONDS TO STATE PLANAR NORTH AMERICAN DATUM (NAD) 1983 OHIO SOUTH.
4. ON-SITE DISPOSAL FACILITY LAYOUT AND RELATED INFORMATION OBTAINED FROM DRAWING X-14, "SITE PLAN", REVISION D, OF THE INTERMEDIATE DESIGN PACKAGE, ON-SITE DISPOSAL FACILITY, GEOSYNTEC CONSULTANTS.
5. CONTINGENCY CELL WILL ONLY BE CONSTRUCTED IF NEEDED FOR DISPOSAL OF IMPACTED MATERIAL FROM THE OPERABLE UNITS. CONTINGENCY VOLUME IS PROVIDED TO ACCOUNT FOR OVEREXCAVATION OF IMPACTED MATERIAL AND/OR INDENTIFICATION OF ADDITIONAL VOLUME OF IMPACTED MATERIAL AS A RESULT OF CONFIRMATORY SAMPLING ACTIVITIES. ONLY ON-SITE MATERIAL SATISFYING THE OSDF WASTE ACCEPTANCE CRITERIA WILL BE DISPOSED IN THE OSDF. IF THE CONTINGENCY CELL IS NOT DEVELOPED, THE SOUTHERN LIMIT OF THE OSDF WILL MOVE 400 FEET TO THE NORTH.
6. ADDITIONAL CONSTRUCTION CONTROL AND DETAILS FOR THE TEST PAD CONSTRUCTION SITE ARE SHOWN ON FIGURE 4-1.

TEST PAD CONSTRUCTION SITE CONTROL POINTS		
POINT	NORTHING	EASTING
1	482703.8	1351369.0
2	482404.7	1351370.3
3	482403.7	1351047.2
4	482702.7	1351045.9
17	482676.7	1351045.9
18	482677.4	1350996.7

TEST PAD WORK PLAN

REV. NO.	DATE	DESCRIPTION	DES BY	DR BY	CHK BY	RVW BY	APP BY

200 100 0 200 400
SCALE IN FEET

OWNER/FACILITY:
UNITED STATES DEPARTMENT OF ENERGY
FERNALD ENVIRONMENTAL MANAGEMENT PROJECT

CLIENT:
FERMCO Restoration Management Corporation
FERNALD ENVIRONMENTAL RESTORATION MANAGEMENT CORPORATION

PROJECT:
ON-SITE DISPOSAL FACILITY

TITLE:
TEST PAD PROGRAM LOCATION MAP 000023

THIS DRAWING MAY NOT BE ISSUED FOR PROJECT TENDER OR CONSTRUCTION, UNLESS SEALED.

SIGNATURE

DATE

SEAL

GEOSYNTEC CONSULTANTS
1100 LAKE HEARN DRIVE
ATLANTA, GEORGIA 30342 USA

FERMCO SUBCONTRACT NO.:	95PS005028
FERMCO DRAWING NO.:	
FIGURE NO.:	2-1
PROJECT NO.:	GE3900-4.1
DOCUMENT NO.:	F9530008
FILE NO.:	3900B011.DGN