420 5-203.3

SUBMITTAL OF AQUIFER RESTORATION PRELIMINARY DESIGN PACKAGE FOR TASK 4: INJECTION DEMONSTRATION AND TASK 5: SOUTH PLUME OPTIMIZATION

09/27/96

DOE-1418-96
DOE-FN EPAS
~~75~~ 84
DESIGN

420

Department of Energy

Ohio Field Office
Fernald Area Office
P. O. Box 538705
Cincinnati, Ohio 45253-8705
(513) 648-3155

SEP 27 1996

DOE-1418-96

Mr. James A. Saric, Remedial Project Director
U.S. Environmental Protection Agency
Region V - SRF-5J
77 West Jackson Boulevard
Chicago, Illinois 60604-3590

Mr. Tom Schneider, Project Manager
Ohio Environmental Protection Agency
401 East 5th Street
Dayton, Ohio 45402-2911

Dear Mr. Saric and Mr. Schneider:

SUBMITTAL OF THE AQUIFER RESTORATION PRELIMINARY DESIGN PACKAGE FOR TASK 4: INJECTION DEMONSTRATION AND TASK 5: SOUTH PLUME OPTIMIZATION

This letter transmits the subject Design Package for your review in accordance with the Operable Unit 5 Remedial Design Work Plan.

If you have any questions concerning this transmittal, please contact Robert Janke at (513) 648-3124 or John Kappa at (513) 648-3149.

Sincerely,

Johnny W. Reising
Fernald Remedial Action
Project Manager

FEMP:Kappa

Enclosure: As Stated

000001

Recycled and Recyclable

cc:w/enc:

S. Fauver, EM-425/GTN
L. Griffin, EM-425/GTN
R.L. Nace, EM-425/GTN
G. Jablonowski, USEPA-V, 5HRE-8J
R. Beamier, TPSS/DERR, OEPA-Columbus
M. Rochotte, OEPA-Columbus
F. Bell, ATSDR
D.S. Ward, GeoTrans
R. Vandegrift, ODOH
S. McLellan, PRC
T. Hagen, FDF/65-2
J. Harmon, FDF/90

w/o enc:

C. Little, FDF/2
EDC, FDF/52-7

bcc w/enc:

R.J. Janke, DOE-FEMP
K. Nichel, DOE-FEMP
D. Carr, FDF/9
W.A. Hertel, FDF/52-5
M.A. Jewett, FDF/52-5
R.W. Kneip, FDF/52-5
R.D. White, FDF/52-5

bcc w/o enc:

L. Parsons, DOE-OH

420

FOR INFORMATION ONLY

Remedial Design
Preliminary Design Package
for
Task 4: Injection Demonstration
Project Number 53100
Task 5: South Plume Optimization
Project Number 53300

Operable Unit 5
Project Order 169
September 1996
Revision 0

Environmental Remedial Action Project
Fernald Environmental Management Project
Fernald, Ohio
FERMCO Subcontract No. 2-21487

PARSONS

25 Merchant Street
Cincinnati, Ohio 45246

000004

Remedial Design
Preliminary Design Package
for
Task 4: Injection Demonstration
Project Number 53100
Task 5: South Plume Optimization
Project Number 53300

Operable Unit 5
Project Order 169
September 1996
Revision 0

Environmental Remedial Action Project
Fernald Environmental Management Project
Fernald, Ohio
FERMCO Subcontract No. 2-21487

PARSONS

25 Merchant Street
Cincinnati, Ohio 45246

Remedial Design
Preliminary Design Package
for
Task 4: Injection Demonstration
Task 5: South Plume Optimization

CONTENTS

SECTION

1.0 Remedial Design for Aquifer Restoration 1-1
- 1.1 Remedial Design Scope of Work 1-1
- 1.2 Injection Demonstration Module Design - Task 4 1-1
- 1.3 South Plume Optimization Module Design - Task 5 1-2
- 1.4 Other Remedial Design Modules 1-2
- 1.5 Project Deliverables and Schedule 1-5
- 1.6 Plan for Review and Finalization of Design Deliverables 1-5

2.0 Project Description 2-1
- 2.1 Project Objectives 2-2
- 2.2 Project Scope and Boundaries 2-2
- 2.3 Project Interfaces 2-4
- 2.4 Document Purpose 2-5
- 2.5 Functional Requirements 2-6

3.0 Design Criteria and Considerations 3-1
- 3.1 ARAR and To Be Considered DOE Orders 3-1
- 3.2 Other Laws, Regulations, Codes, Standards, and DOE Orders 3-1
- 3.3 Project-Specific S/RIDs 3-10
- 3.4 Design Considerations 3-13
- 3.5 Secondary Containment 3-17

4.0 System Location 4-1
- 4.1 ID Siting Basis 4-1
- 4.2 SPO Siting Basis 4-1

CONTENTS (Continued)

SECTION

5.0 System Description 5-1
- 5.1 ID Process Description 5-1
- 5.2 ID Control Philosophy 5-3
- 5.3 SPO Process Description 5-4
- 5.4 SPO Control Philosophy 5-5

6.0 Component Design Basis 6-1
- 6.1 Wells 6-1
- 6.2 Pumps 6-2
- 6.3 Tanks 6-2
- 6.4 Piping 6-3
- 6.5 Enclosures 6-4
- 6.6 Cleanouts 6-4
- 6.7 Instrumentation 6-4
- 6.8 Electrical 6-8
- 6.9 Roads 6-8

7.0 Path Forward 7-1

8.0 References 8-1

Appendices

A Performance Grades
B Title I Specifications
C Site Plan
D Piping and Instrumentation Diagrams

LIST OF ILLUSTRATIONS

FIGURES

2-1 Project Design Envelope
2-2 FAST Diagram

5-1 Injection Well

TABLES

1-1 Remedial Design Deliverables and Schedules for Groundwater

3-1 Applicable or Relevant and Appropriate Requirements and To Be Considered Requirements

4-1 Coordinates of Wells

LIST OF ACRONYMS AND ABBREVIATIONS

AASHTO	American Association of State Highway and Transportation Officials
ABMA	American Bearing Manufacturers Association
ANSI	American National Standards Institute
ARAR	Applicable or Relevant and Appropriate Requirement
ASCE	American Society of Civil Engineers
ASME	American Society of Mechanical Engineers
ASTM	American Society for Testing and Materials
AWPA	American Wood-Preservers Association
AWWA	American Water Works Association
AWWT	Advanced Wastewater Treatment
CERCLA	Comprehensive Environmental Response, Compensation, and Liability Act
CFR	Code of Federal Regulations
CG&E	Cincinnati Gas & Electric
D&D	Decontamination and Decommissioning
DCS	Distributed Control System
DOE	United States Department of Energy
EIA	Electronic Industries Association
FAST	Functional Analysis System Technique
FCV	Flow Control valve
FEMP	Fernald Environmental Management Project
FERMCO	Fernald Environmental Restoration Management Corporation
gpm	gallons per minute
GRL	General Requirement List
HDPE	High-Density Polyethylene
HOA	Hand-Off-Auto
ID	Injection Demonstration
IEEE	Institute of Electrical and Electronics Engineers
IEMP	Integrated Environmental Monitoring Plan
IWST	Injection Water Storage Tank
LCV	Level Control Valve
LIT	Level Indicating Transmitter
NEMA	National Electrical Manufaturers Association
NETA	InterNational Electrical Testing Association
NFPA	National Fire Protection Agency
O&M	Operations and Maintenance
Ohio EPA	Ohio Environmental Protection Agency
OU	Operable Unit
ppb	parts per billion

LIST OF ACRONYMS AND ABBREVIATIONS (Continued)

ppm	parts per million
PVC	polyvinyl chloride
RA	Remedial Action
RD	Remedial Design
ROD	Record of Decision
S/RID	Standards/Requirements Identification Documents
SCS	Soil Conservation Service
SFES	South Field Extraction System
SPO	South Plume Optimization
TBC	To Be Considered
TIA	Telecommunications Industry Association
UCRL	University of California Research Laboratory
UL	Underwriters Laboratories
US EPA	United States Environmental Protection Agency

SECTION 1

REMEDIAL DESIGN FOR AQUIFER RESTORATION

1.1 Remedial Design Scope of Work

As described in the approved Operable Unit 5 (OU-5) Remedial Design (RD) Work Plan, 11 individual tasks comprise the RD work scope for the restoration of the Great Miami Aquifer. The design deliverables accompanying these 11 tasks will be submitted to the Ohio Environmental Protection Agency (Ohio EPA) and United States Environmental Protection Agency (US EPA) for approval in accordance with the document delivery schedule outlined in Section 3 of the RD Work Plan (and summarized in section 1.5 of this document). Consistent with this schedule, preliminary and prefinal design packages will be furnished for agency review for each of the principal restoration modules comprising the aquifer restoration system. By definition, the preliminary design packages will convey the project scope and objectives, the design basis, and the functional design requirements necessary to prepare for the detailed design of each individual module. The prefinal design packages will then convey the detailed design (consisting of detailed design drawings and specifications) at a level of detail necessary to support construction and installation. Final design packages will then be issued for construction purposes following the successful resolution of all US EPA and Ohio EPA comments on the prefinal design.

The first new module designed under this program was the South Field Extraction System (identified as Task 3 in the RD Work Plan). The preliminary design for the South Field Extraction System was approved in the summer of 1995 and the prefinal design was approved in the spring of 1996. This document provides the preliminary designs for the next two modules required by the RD Work Plan sequence and schedule: the Injection Demonstration Module (Task 4 in the RD Work Plan) and the South Plume Optimization Module (Task 5 in the RD Work Plan). The preliminary designs for these modules are being submitted contemporaneously in a single package because of the identical RD Work Plan design package submittal dates for these two modules. The preliminary and prefinal designs for these two new modules will follow the same general content and format approved for the South Field Extraction System mentioned above. An overview of the Injection Demonstration and South Plume Optimization modules is provided below.

1.2 Injection Demonstration Module Design - Task 4

The concept of injecting treated groundwater into the aquifer has been under evaluation as a potentially viable enhancement for the overall restoration system. The outcome of the modeling evaluations conducted under Task 1 (Update of the Baseline Remedial Strategy) and the success of the short-term injection tests conducted in October 1995 and April 1996 at the Fernald Environmental Management

Project (FEMP) provided strong indications of the benefits and viability of incorporating groundwater injection technology into the final baseline strategy. Task 4 is dedicated to the design of a five-well demonstration module that will be used to prove out the technology at the field scale. This demonstration is expected to be funded through the United States Department of Energy (DOE) EM-50 Technology Development Program. If the process then proves successful at the field scale, additional injection wells will be incorporated into the design packages for the area-specific restoration modules as needed. The number and locations of the injection wells needed over the life of the remedy (beyond the Injection Demonstration Module) are being evaluated through the modeling simulations conducted under Task 1, and will be reported in the Baseline Remedial Strategy Report prepared as part of Task 1.

1.3 South Plume Optimization Module Design - Task 5

The South Plume Optimization Module was so named during the regulatory agencies' review of the April 1995 South Plume Removal Action System Evaluation Report and signifies the desire of US EPA, Ohio EPA, and DOE to restore the off-property portion of the plume quickly and cost effectively. To accelerate the recovery of FEMP contaminants in the off-property area, two additional extraction wells will be added to supplement the existing South Plume containment wells situated at the leading edge of the plume. The locations and pumping rates for the extraction wells were determined as part of the modeling simulations under Task 1. The design of the wells and accompanying infrastructure is being accomplished by Task 5 (of which this document is a part). The operation of the South Plume Optimization Module will be coordinated with the other modules (including the Injection Demonstration Module, as necessary) to achieve discharge requirements through the operation schedules and strategy contained in the Great Miami Aquifer restoration program Operations and Maintenance (O&M) Plan (to be developed under Task 2).

1.4 Other Remedial Design Modules

As a backdrop for the preliminary design package for the Injection Demonstration and South Plume Optimization modules, the remaining nine tasks comprising the aquifer restoration RD work scope are summarized in the following sections. The descriptions are consistent with the OU-5 RD Work Plan.

1.4.1 Update of the Baseline Remedial Strategy - Task 1

Under Task 1, the DOE has prepared and submitted (October 1, 1996) a Baseline Remedial Strategy Report that documents the results of the enhancement modeling simulations that extend beyond the base case restoration system described in the OU-5 Feasibility Study. The simulations included an evaluation of injection technologies and the refinements in well locations necessary to enhance restoration of the off-property portion of the plume. The Baseline Remedial Strategy Report provides the basis for the number of wells, well locations, pumping rates, and pumping durations for the Injection Demonstration and South Plume Optimization modules being designed under Tasks 4 and 5.

000012

Four clean-up scenarios were included in the simulations: 25, 15, 10, and 7.5 years. The scenarios compared the cost implications of shortening the remediation schedule (thereby reducing long-term O&M costs) against the potential increase in capital costs necessary to accommodate any additional infrastructure needed for a shorter remediation time.

1.4.2 Operations and Maintenance Plan - Task 2

A master O&M Plan will be developed as a means to coordinate the extraction, collection, conveyance, treatment, and discharge of all groundwater, stormwater, and remediation wastewater generated on a sitewide basis over the life of the FEMP's clean-up mission. The plan will delineate the operating schedule, allowable direct discharge and treated water flow rates, system-by-system sequencing, and other operating constraints required to balance sitewide water management needs so that the FEMP's discharge limits are achieved. The plan will be modified as necessary over the life of the remedy to accommodate expansions to the system or the retiring of individual restoration modules from service once area-specific clean-up levels are achieved. The plan will thus serve as a living guidance document to instruct operations staff in implementing required adjustments to the system over time.

The plan will also serve as the focal point for coordinating and scheduling remedial wastewater conveyance and treatment needs with other projects throughout the duration of the FEMP's clean-up mission. In accordance with the RD Work Plan schedule, it is expected that the O&M Plan will be furnished to the US EPA and Ohio EPA for approval in the summer of 1997, approximately 6 months ahead of the effective date of the FEMP's 20 ppb total uranium discharge limit to the Great Miami River.

1.4.3 South Field Extraction System Module Design (Complete) - Task 3

The South Field Extraction System (SFES) was designed under a US EPA and Ohio EPA-approved project-specific plan before issuance of the OU-5 Record of Decision (ROD). The nine wells comprising this module were installed in the summer and fall of 1995. The remaining piping and other infrastructure needed to complete the system will be installed according to the initial implementation schedule to be provided in the Remedial Action (RA) Work Plan (discussed under Task 10). The operation of the well field will be coordinated with the other restoration and treatment components by the O&M Plan (prepared under Task 2). The remedial design for this task is complete.

1.4.4 Plant 6 Area Extraction Module Design - Task 6

The Plant 6 area module is necessary to recover contaminants from beneath and just east of the FEMP's former production area. The locations of the extraction wells for this system were identified as part of the modeling simulations under Task 1. The design of the wells and accompanying infrastructure will be accomplished by Task 6. The operation of this module will be coordinated with the others (including injection, as necessary) by updates to the O&M Plan.

1.4.5 Waste Storage Area Extraction Module Design - Task 7

The waste storage area module is necessary to recover contaminants from beneath OUs 1 and 4. The locations of the extraction wells for this system were identified as part of the modeling simulations under Task 1. The design of the wells and accompanying infrastructure will be accomplished by Task 7. The operation of this module will be coordinated with the others (including injection, as necessary) by updates to the O&M Plan.

1.4.6 Advanced Wastewater Treatment Expansion Design - Task 8

As discussed in the OU-5 ROD, the existing capacity of the Advanced Wastewater Treatment (AWWT) system will be expanded to the maximum achievable within the confines of Building 51. This capacity will be used to enhance the FEMP's ability to meet groundwater, stormwater, and wastewater treatment needs and satisfy discharge requirements for release of water to the Great Miami River. The manner in which the AWWT facility's capability is used in concert with the FEMP's other restoration modules will be coordinated over the life of the remedy through the O&M Plan. The remedial design for this task is complete. Construction of the AWWT system expansion will occur in accordance with the RA construction schedule provided in the RA Work Plan (Task 10).

1.4.7 Integrated Environmental Monitoring Plan - Task 9

As the environmental media operable unit, Operable Unit 5 will be responsible for maintaining a baseline of environmental conditions at the site and monitoring the sitewide impacts attributable to the implementation of the FEMP's various remedial actions. Monitoring will also be conducted following the completion of cleanup as required to assess the continued protectiveness of the remedial actions. A sitewide Integrated Environmental Monitoring Plan (IEMP) has been developed that specifies the type and frequency of environmental monitoring activities to be conducted during remedy implementation and to determine when restoration activities for the Great Miami Aquifer are complete. The plan addresses monitoring requirements for flora, fauna, air, surface water, sediment, and groundwater.

Once approved, the IEMP will incorporate the routine groundwater monitoring functions for OU-5 currently conducted through the Resource Conservation and Recovery Act property-boundary groundwater monitoring program and the South Plume Removal Action Design, Monitoring, and Evaluation Program Plan, as well as future remedy performance monitoring associated with the various groundwater extraction modules and the On-Site Disposal Facility. This document was submitted to US EPA and Ohio EPA on August 1, 1996.

1.4.8 Remedial Action Work Plan - Task 10

An RA Work Plan for aquifer restoration will be prepared to fulfill Amended Consent Agreement obligations. The RA Work Plan will provide all information required by the Amended Consent Agreement and convey the enforceable RA construction schedule for the first restoration modules to be brought on line through the enforceable post-ROD RD/RA process. As each successive module is added in the future over the life of the remedy, an addendum to the RA Work Plan will be developed that will convey the enforceable RA construction schedule for that particular module. The RA Work Plan will be submitted after the baseline remedial strategy is finalized, and the future addenda will be furnished concurrently with the prefinal design package prepared for each module. It is envisioned that the first enforceable RA construction schedule that will be provided with the RA Work Plan will encompass construction of the SFES piping network (Task 3), the AWWT Expansion (Task 8), the Injection Demonstration (Task 4), and the South Plume Optimization (Task 5) modules.

1.4.9 Site Closeout and Deletion of the FEMP from the CERCLA National Priorities List - Task 11

Based on current funding scenarios for the FEMP, the endpoint of the clean-up mission for the site will be defined by completion of the Great Miami Aquifer restoration project. Once remedial goals for the aquifer are achieved across the site (or necessary technical impracticability waivers granted by the US EPA), a site closeout report will be prepared and the formal documentation assembled to permit delisting of the FEMP from the Comprehensive Environmental Response, Compensation, and Liability Act (CERCLA) National Priorities List. Assembling the delisting package, conducting required public participation activities, and meeting all reporting requirements for formal closeout of the project will be handled under this task.

Project closeout will be conducted according to the US EPA guidance that is in effect at the time of remedy completion.

1.5 Project Deliverables and Schedule

Table 1-1 presents the design deliverables and enforceable document delivery schedule for the aquifer restoration portion of OU-5, as contained in the RD Work Plan. The preliminary design for the Injection Demonstration and South Plume Optimization modules is being submitted in accordance with this schedule.

1.6 Plan for Review and Finalization of Design Deliverables

The DOE will formally address all US EPA and Ohio EPA comments on the preliminary design review packages through submittal of a comment response document within 30 days (plus 20-day extensions, if necessary) of receipt of both agencies' comments. The DOE does not plan to submit revised preliminary design documents, but rather will incorporate comment resolutions into the prefinal design.

The DOE will formally address all comments submitted by the US EPA and Ohio EPA on the prefinal design packages through the submittal of a comment response document within 30 days (plus 20-day extensions, if necessary) of receipt of both agencies' comments. Following approval of the comment response document, all comment resolutions will be incorporated into the final design which will then be issued for construction.

Table 1-1 - Remedial Design Deliverables and Schedules for Groundwater

Module-Specific Design Packages

Restoration Module	Preliminary Package	Pre-Final Package
South Field Extraction System (Task 3)	Complete	Complete
Injection Demonstration (Task 4)	This Package	January 15, 1997
South Plume Optimization (Task 5)	This Package	January 15, 1997
Waste Storage Area Extraction (Task 7)	June 15, 2001	November 30, 2001
Plant 6 Area Extraction (Task 6)	August 15, 2001	November 30, 2001

Remedial Action Work Plans and Technical Reports

Deliverable	Submittal Date
Baseline Remedial Strategy Report (Task 1)	October 1, 1996
Integrated Environmental Monitoring Plan (IEMP) (Task 9)	Complete
Operation and Maintenance Plan (Task 2)	July 1, 1997
Remedial Action Work Plan for the Aquifer Restoration Project (Task 10)	November 1, 1996
Site Closeout Report (Task 11)	90 days following project completion

SECTION 2

PROJECT DESCRIPTION

In 1993, as part of the South Plume Removal Action, five extraction wells were placed into service along the southern edge of the off-site portion of the plume to create a hydraulic barrier to stem the southerly migration of contaminants until remediation of the aquifer could be accomplished. The South Plume Optimization (SPO) project's purpose is to enhance the efficiency of capturing the off property portion of the plume, by expanding and modifying this extraction well network. The expansion includes the installation of two new wells positioned to enhance uranium removal along the central axis of the off-property plume, upgrading controls for the four existing wells, and placing one of the existing wells in stand-by.

The design of this system will incorporate refinements and lessons learned from the operation of the South Plume Recovery system. The SPO system will be controlled remotely from the AWWT Control Room with monitored parameters to allow ongoing performance evaluation. The AWWT Control Room, which is manned around-the-clock, will be able to monitor and adjust flows from each extraction well. To minimize the occurrence of well screen clogging the two new wells will be designed to ensure the well screen remains below the seasonal water elevations, and a well maintenance program will be adopted to control the formation of iron deposits on the well screens and pump assemblies. Major valving and instrumentation will be located above ground in a heated structure to permit easier access, maintenance, and protection of equipment. Additionally, the pumping strategy has been thoroughly defined and optimal pump sizing can be used for the fixed pumping rates. The system will integrate into the overall aquifer extraction and treatment strategy by use of a double header system permitting groundwater to be either sent to treatment or bypassed to the Great Miami River on a well by well basis. The design will also modify the existing South Plume Recovery wells to allow remote monitoring and control.

In concert with the planned groundwater extraction strategy for the aquifer, the Injection Demonstration (ID) system will be designed and constructed to perform a field scale verification that injection technology can enhance the contaminant removal rate and subsequently the final remediation of the aquifer. The ID System consists of five wells located along the southern FEMP property line, each injecting 100-200 gallons per minute of treated groundwater. The injection water will contain less than 20 ppb uranium and less than 0.1 ppm iron. The injection water will flow from the AWWT Expansion Project to a 50,000 gallon surge tank to the injection wells via a pipe network. The injection flow rate will be controlled locally at each well head. Future design modifications will be made to the system to permit remote control of the injection wells when the SFES is in place.

The ID System design is based upon modeling efforts performed to enhance the final remediation of the aquifer (DOE 1996a), an injection test performed in the South Field area (DOE 1995), and a geochemical analysis of injection waters (IT 1996).

2.1 Project Objectives

The objectives of the SPO/ID project include:

1) Design, construct, and operate an SPO system to enhance the remediation of the existing South Plume to accelerate the restoration of the off-property portion of the plume.

2) Design, construct, and operate an ID system to field scale verify that injection technology enhances the remediation of the aquifer.

3) Integrate with other ARP design modules to ensure that a coordinated system is achieved with cost effective design and construction strategies.

4) Comply with pertinent regulatory requirements, DOE Orders, and national codes and standards.

5) Design for a 15-year life.

6) Provide for the future expansion of the ID system.

7) Coordinate with current and future FEMP remedial activities.

2.2 Project Scope and Boundaries

The SPO/ID project scope and boundaries are presented in Figure 2-1. The project scope and boundaries include:

1) SPO Wells: Based on groundwater modeling, well locations were selected to optimize the extraction efficiency of the South Plume Recovery System. This optimization includes the placement of two additional extraction wells in this area.

2) ID Wells: Based on groundwater modeling, injection well locations were selected to increase the efficiency of uranium removal in the SFES and the SPO systems. This injection system includes the design and construction of five injection wells with the expansion capability for five additional wells.

*ILLUS\OU-5\PO-169\S PLUME/SFES.EPS

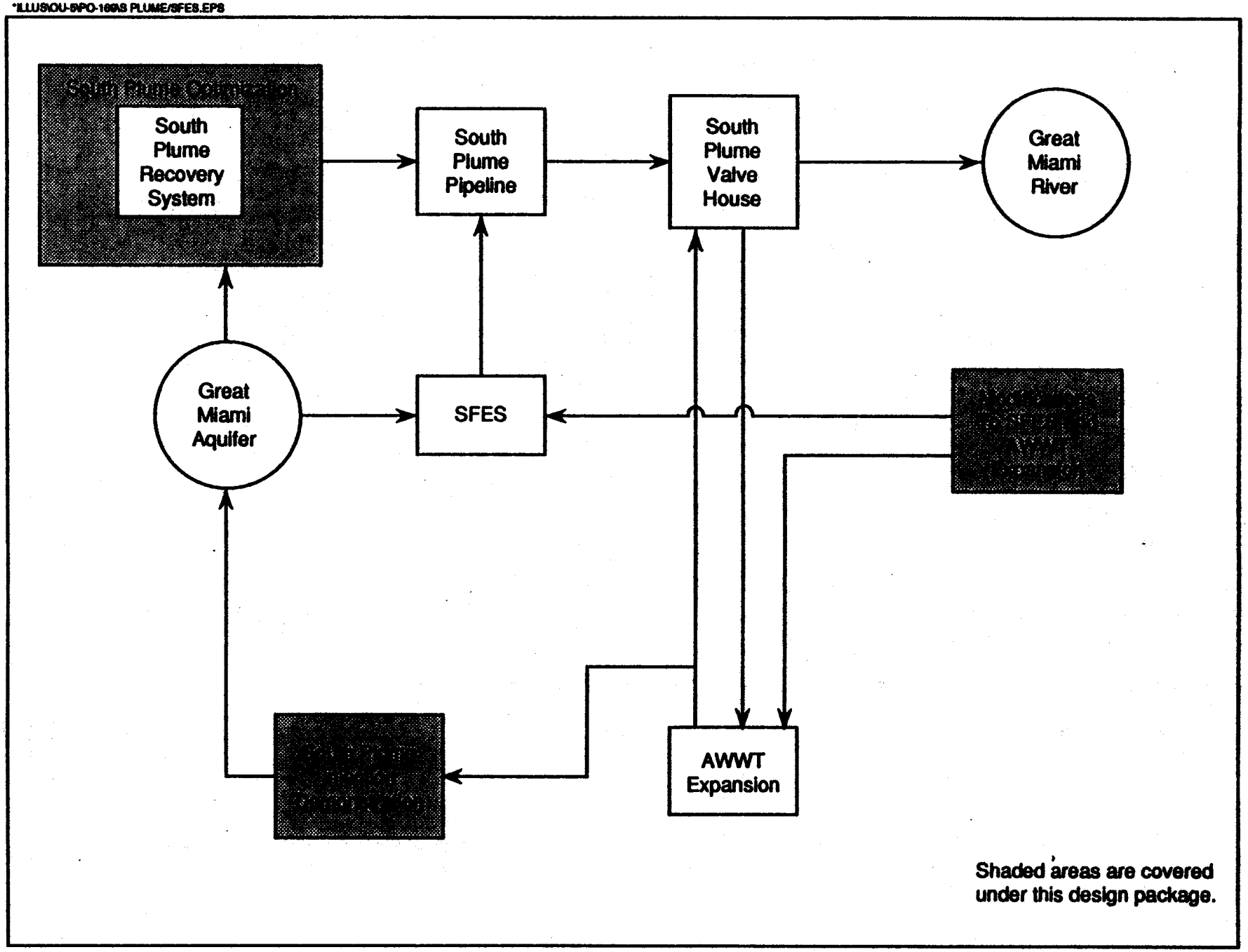

Figure 2-1 - Project Design Envelope

420

3) Modifications to Existing Systems: This project will modify existing South Plume Recovery Wells 3924, 3925, 3926, and 3927 to allow monitoring and control from the AWWT control room. This project will also modify the AWWT Expansion process to include iron removal at the influent of the treatment process to ensure proper injection parameters at the effluent of the process.

4) Tie-Ins to Existing Systems: The SPO and ID systems will tie into the following existing systems:
   (1) South Plume Removal Action Pipeline: The 20-inch force main will convey the combined effluent from the existing South Plume Recovery wells to the SPO valve house. This combined effluent can then be directed to discharge via a new 12-inch discharge line or to treatment using the existing 20-inch force main. The new extraction wells 1 and 3N will also be piped to the SPO valve house where their effluent can be individually directed to discharge via the new 12-inch discharge line or to treament using the existing 20-inch force main.
   (2) Cincinnati Gas and Electric (CG&E) Company Distribution: The SPO and ID systems will most likely receive power from the existing 13.8 kV and 34.5 kV distribution systems along Willey and Paddys Run roads.
   (3) AWWT Expansion Effluent: The AWWT Expansion Effluent will provide the injection water source for the ID system. A tie-in will be sized for the AWWT Expansion process capacity (1,800 gpm) to allow for future expansion of the injection system.
   (4) AWWT Control Room: Monitoring and controls for the SPO system will be housed in the AWWT control room. Remote input/output data collection will be provided for each well for the SPO system.

2.3 Project Interfaces

The SPO/ID systems require interfacing with existing systems and planned design modules. The physical interfaces are:

1) South Plume Removal Action - The 20-inch force main will convey the combined effluent from the existing South Plume Recovery wells to the SPO valve house. This combined effluent can then be directed to discharge via a new 12-inch discharge line or to treatment using the existing 20-inch force main. The new extraction wells 1 and 3N will also be piped to the SPO valve house where their effluent can be individually directed to discharge via the new 12-inch discharge line or to treament using the existing 20-inch force main. The SPO project will modify the existing South Plume Recovery Wells 3924, 3925, 3926, and 3927 to allow monitoring and control from the AWWT control room.

2) AWWT Expansion - The effluent from the AWWT Expansion project will be used as the source of water to be injected into the aquifer. This will require tying into the AWWT Expansion effluent line to allow filling of the ID injection water supply tank. Additionally, due to the required water quality standards for injection, iron removal will be required at the influent of the AWWT Expansion system. The ID design and procurement strategy is to integrate the effort on

the AWWT Expansion and the ID to achieve cost effectiveness in the design and construction of the ID system. The AWWT Expansion project will provide an underground influent line which will be coordinated with the anticipated routing of the ID influent line. The design and procurement strategy for these projects is to have the AWWT design drawings contain all of the tie-in piping up to the AWWT Expansion influent tie-in and the iron removal modifications which are required for the ID system. The construction subcontractor for the AWWT Expansion project will be responsible for the construction of these portions of the ID system.

3) SFES - Portions of the ID pipeline will be routed parallel to the proposed SFES discharge line in the South Field area. The ID design and procurement strategy is to integrate the effort on the SFES and the ID system to achieve cost effectiveness in the design and construction of the ID system. The portion of the line which runs parallel to the SFES line will be detailed in the SFES design package by modifying existing SFES design documents. The ID construction subcontractor will be responsible for installing the portion of the SFES line which is in the common trench with the ID line. In addition to the common trench piping, the SPO system interfaces with the SFES electrical and communication systems. All control communications for the SPO will be directed to the SFES valve house and then use the SFES fiber optic system to convey the signals on up to the AWWT control room.

4) AWWT Control Room - Remote monitoring and control of the SPO system will be achieved using the existing Distributed Control System (DCS) and software at the AWWT control room.

The design considerations which will be followed in attaining these interfaces are addressed in Subsection 3.4.

2.4 Document Purpose

This document includes functional and design requirements identified during Title I work. Some of these requirements may not be fully defined until the detailed (Title II) design phase. This document:

1) Provides a reference on the scope of work for Title II Design

2) Serves as a reference for technical reviews

3) Provides a reference to support operability evaluations or determinations for continued or modified operation

4) Provides a reference to support review of proposed changes to technical specifications

This document provides information that identifies the specific functions to be performed by a System, Structure, or Component of a facility and the specific values or ranges of values chosen for controlling parameters for reference bounds for design. The document is based on restraints and requirements, which in turn are verified through calculations and analysis. The document will serve as the technical project basis for proceeding with Title II Design and is formatted to follow the development of the project design

from development of the functional requirements through preparation of the Title I Design. Section 1 included an overview of the remedial design scope of work for restoration of the Great Miami Aquifer. This section includes a general description defining the project purpose, project scope and boundaries, project interfaces, and project functional objectives. Section 3 provides the project design criteria and considerations. Section 4 describes the background on the location of major system components. Section 5 contains a summary system description. Section 6 provides the design basis for proceeding with Title II Design. Section 7 provides the references which serve as a basis for this design. In addition, the following information is provided in the appendices to this document:

1) Recommended performance grades for each SSC of the SPO/ID systems (Appendix A)

2) Title I specifications, which consist of brief descriptions of materials, finishes, and methods to be used for the projects (Appendix B)

3) A Site Plan and a Preliminary Piping and Instrumentation Diagram (Appendices C and D)

2.5 Functional Requirements

The first step in the design process is to identify the functional requirements. The functional objectives establish the required capabilities of the final design and establish a baseline upon which the design criteria and title design evolve. In the most basic terms, the functional objectives define what the end product of the design must do.

A Functional Analysis System Technique (FAST) diagram (Figure 2-2) was produced to establish the functions to be provided by the SPO and ID systems. The project objective becomes the primary functional objective as depicted on the left side of the FAST diagram. Proceeding from left to right, the lower-level objectives, which explain how the primary objective will be met, are identified. To the far right are the subfunctions, which identify the functional elements needed to achieve the primary function.

The basic functions that must be provided by the SPO/ID systems are:

1) Extract Groundwater
2) Inject Treated Groundwater
3) Integrate Operations
4) Ensure Dependability
5) Ensure Flexibility

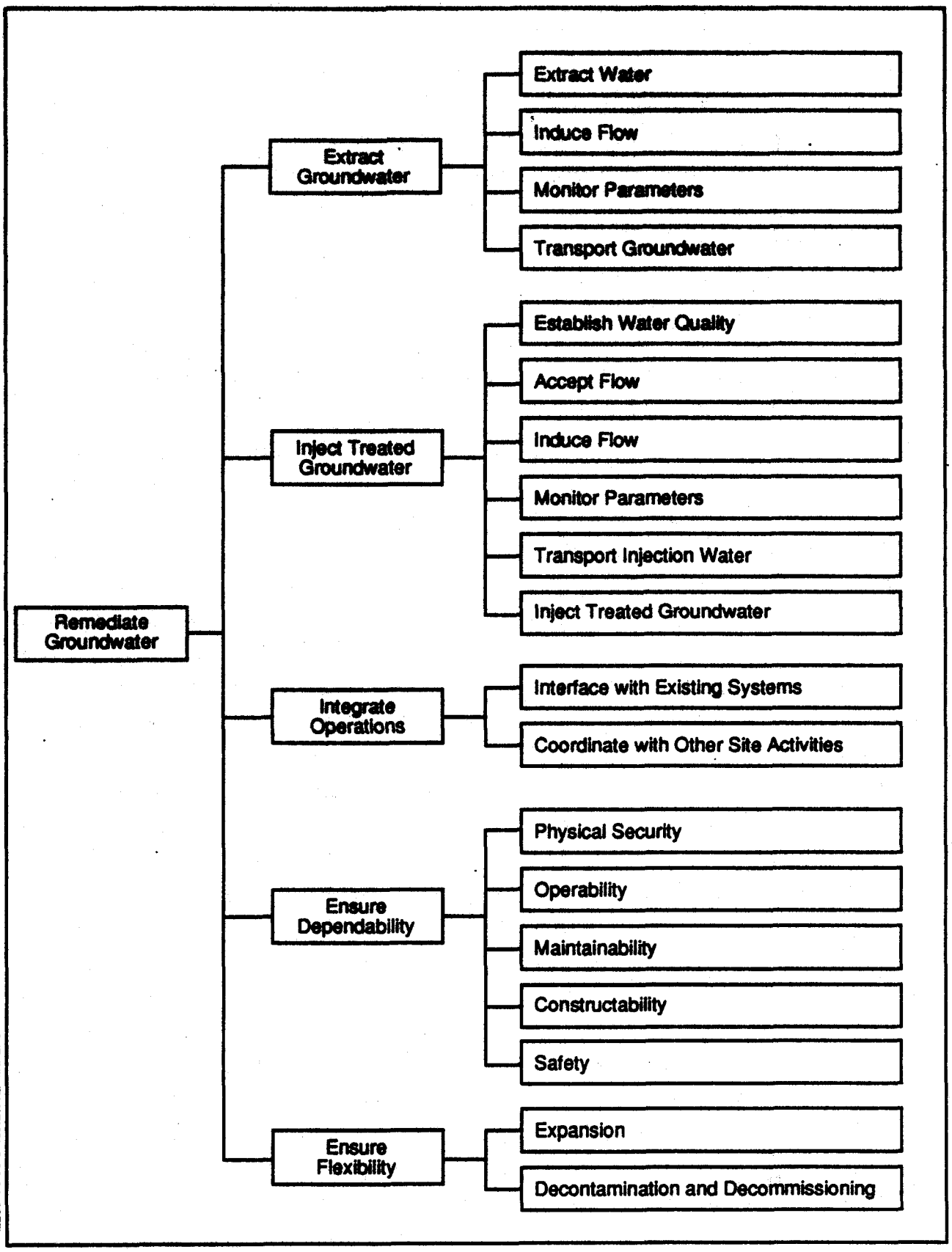

*LLUSOU-5\PO-169\GW REMED.EPS

Figure 2-2 - FAST Diagram

2.5.1 Extract Groundwater

The primary objective for the SPO system is to extract and transport groundwater for remediation of the aquifer. This objective is broken down into four general functions:

Extract Water

The SPO system must extract water from target areas of uranium concentration in the Great Miami Aquifer to lower the water contamination to less than or equal to 20 ppb uranium concentration at all points in the impacted areas of the aquifer, as described in the OU-5 ROD. This optimized system is to operate in conjunction with the ID system to achieve a higher uranium mass removal rate than is currently being accomplished with the South Plume Recovery System.

Induce Flow

The SPO system must be capable of achieving and sustaining a 600 gpm extraction rate over a 15-year design life to achieve desired plume capture and remediation (DOE 1996a).

Monitor Parameters

The SPO system must have monitoring capabilities which allow measurement of the extraction well performance and sample stations to allow for periodic lab analysis to determine water quality.

Transport Groundwater

The SPO system must have the capability to direct flow to either treatment facilities or to be discharged to the Great Miami River.

2.5.2 Inject Treated Groundwater

The primary objective for the ID system is to inject treated groundwater into the aquifer to achieve a higher uranium mass removal rate. This objective is broken down into six general functions:

Establish Water Quality

To ensure the proper operational characteristics for the injection wells, proper water quality must be maintained. Maintaining proper pH is not anticipated as being a problem due to proper selection of injection well coordinates (IT 1996). As such, no engineered measures will be taken to adjust the pH. Iron concentration must be maintained <0.1 parts per million (ppm). Uranium concentration must be <20 ppb.

Accept Flow

The ID system must have a surge capacity to hydraulically separate the ID system and to allow for minor fluctuations in the injection water supply.

Induce Flow

To achieve restoration goals and provide for field scale demonstration evaluations, the ID system must be capable of delivering water for injection at a 1,000 gpm (200 gpm per well) rate over a projected 15-year design life (DOE 1996a).

Monitor Parameters

The ID system must have monitoring capabilities which allow measurement of the injection well performance and sample stations to allow for periodic lab analysis to determine water quality.

Transport Injection Water

The ID system must have the capability to direct flow from the AWWT Expansion effluent to each injection well location.

Inject Water

The ID system must inject water into target areas of the Great Miami Aquifer to accelerate the remediation of contaminated portions of the aquifer.

2.5.3 Integrate Operations

In addition to its primary objective of extracting and injecting water, the SPO/ID systems must also minimize project costs and have a minimal impact on other site remedial activities. This objective is broken down into two general functions as follows:

Interface with Existing Systems

The SPO/ID systems must be capable of using existing treatment and transport systems to the maximum extent practicable, while remaining within planned operation and control strategies.

Coordination with Other Site Activities

The SPO/ID systems must be designed and constructed such that interferences with other existing and planned remediation activities and systems are minimized.

2.5.4 Ensure Dependability

The SPO/ID systems must provide an extraction, injection, and transport system which is dependable throughout its operational lifetime. To accomplish this, the following general objectives must be met:

Physical Security

The SPO/ID systems must be designed such that its components are physically secure from random acts of vandalism, theft, and/or sabotage.

Operability

The SPO/ID systems must be designed to incorporate measures that provide for ease of operations, where practical.

Maintainability

The SPO/ID systems must be designed to incorporate measures that provide for ease of maintenance, where practical.

Constructability

The SPO/ID systems must be designed to incorporate measures that provide for ease of construction, where practical.

Safety

The SPO/ID systems must be designed to incorporate measures which provide for safe operations, maintenance, and construction.

2.5.5 Ensure Flexibility

The SPO/ID systems must provide for future expansion and eventual decommissioning. This objective consists of the following general objectives.

Expansion

The SPO/ID systems must allow for and incorporate measures to provide ease of expansion for additional groundwater injection systems (DOE 1996a).

Decontamination and Decommissioning

The SPO/ID systems must be designed to minimize the required effort for the future Decontamination and Decommissioning (D&D) of the system.

SECTION 3

DESIGN CRITERIA AND CONSIDERATIONS

3.1 ARAR and To Be Considered DOE Orders

The Applicable or Relevant and Appropriate Requirements (ARARs) and To Be Considered (TBC) requirements are identified in Table 3-1 and represent only those requirements that pertain to the design of the ID and SPO systems. The ARARs and TBC requirements in Table 3-1 were selected from those listed in the OU-5 ROD. Note that discharge requirements are not included in these tables, as wastewater discharges to the Great Miami River are not in the scope of this design project. This table provides a regulatory citation, requirement summary, and implementation strategy for each requirement.

3.2 Other Laws, Regulations, Codes, Standards, and DOE Orders

This subsection presents other general laws, regulations, codes, standards, and orders that are specific requirements pertaining to the design and construction of the systems.

3.2.1 General Criteria

The following codes, standards, and DOE Orders apply to multiple disciplines in achieving the SPO/ID design:

1) DOE Order 6430.1A, "General Design Criteria"

2) Ohio Basic Building Code (1995)

3) Uniform Building Code (1994)

4) DOE-STD-1020-94, "Natural Phenomena Hazards Design and Evaluation Criteria for Department of Energy Facilities"

5) National Fire Protection Agency (NFPA) 70, National Electrical Code

6) DOE Order 5480.28, "Natural Phenomena Hazards Mitigation"

7) 29 Code of Federal Regulations (CFR) Part 1910, "Occupational Safety and Health Administration"

000028

Table 3-1 - Applicable or Relevant and Appropriate Requirements and To Be Considered Requirements

Category	Requirement	Compliance Strategy
Injection	OAC 3745-34-07 Movement of fluid into underground sources of drinking water that contain a contaminant which may cause a violation of any primary drinking water regulation under OAC 3745-8 is prohibited. (Applicable)	Injected water will be treated prior to injection and will not exceed MCLs or otherwise degrade the GMA water quality.
Injection	OAC 3745-34-08 Injection of hazardous or radioactive waste in Class IV wells is prohibited unless approved by the Director pursuant to provisions for cleanup of releases under Chapter 3734 of the Revised Code, CERCLA (42 USC 9601-9657) or RCRA (42 USC 6901-6987). (Applicable)	No injection of hazardous or radioactive waste will occur. Injected water will not contain any listed hazardous constituents nor exhibit a hazardous characteristic. Additionally, the injected water will be treated to remove uranium prior to injection.
Injection	OAC 3745-34-01, 13 Injection into existing and new Class V wells is authorized by rule pursuant to ORC 6111.043 until further requirements under future rules become available, unless injection is of sewage, industrial waste, or other wastes, as defined in ORC 6111.01, into or above an Underground Source of Drinking Water. (Applicable)	Only treated groundwater from AWWT Expansion will be injected into the aquifer. Groundwater will be treated by iron removal, filtration and ion exchange prior to discharge for injection.

Table 3-1 - Applicable or Relevant and Appropriate Requirements and To Be Considered Requirements (Continued)

Category	Requirement	Compliance Strategy
Injection	ORC 6111.043-6111.049 These sections of the ORC establish a program for regulation of the injection of sewage, industrial waste, hazardous waste, and other wastes into wells to control pollution of the waters of the state, to prevent contamination of underground sources of drinking water, and to satisfy all requirements of the Safe Drinking Water Act, regarding injection wells as defined in regulations adopted under that Act. (Applicable)	Only treated groundwater from AWWT Expansion will be injected into the aquifer. Groundwater will be treated by iron removal, filtration, and ion exchange prior to discharge for injection.
Injection	Ohio EPA Policy 5X26 This policy outlines requirements for groundwater remediation via subsurface injection of fluids. (To Be Considered)	The requirements of this policy will be met by the design of the groundwater remediation program. Descriptions of the nature of the release, hydrogeology, proposed remedial action, chemistry of injected fluids, volume and rate of injected fluids, and groundwater monitoring results will be provided in this design deliverable and/or in previous OU-5 RI/FS and ROD documents. Operation and maintenance and groundwater monitoring information associated with the ID and SPO projects will be provided in quarterly reports, per the IEMP.
Siting Wells	OAC 3745-9-04 (A) New wells should be located where they can be maintained, and where protection of groundwater, human health, and the environment is maintained. (Applicable)	All injection and extraction wells will be located in areas that allow the wells to be properly maintained and where groundwater, human health, and the environment will be protected. There are no surface nor subsurface conditions at the well locations that would allow contamination to enter the well.

000029

420

000030

Table 3-1 - Applicable or Relevant and Appropriate Requirements and To Be Considered Requirements (Continued)

Category	Requirement	Compliance Strategy
Well Installation	OAC 3745-09-05 (A)(1), (B) through (H) OAC 3745-09-06 (A), (B), (D), and (E) Specifies minimum construction requirements for new groundwater wells for casing material, casing diameters, casing depth, potable water, annular spaces, use of drive shoe, opening to allow water entry, contaminant entry. (Applicable)	The construction of extraction and injection wells will incorporate, to the extent as is appropriate for such wells, the construction requirements for drinking water wells. The design and installation of the groundwater wells will be in accordance with Appendix J of the US EPA-approved *Sitewide CERCLA Quality Assurance Project Plan*, and the design information in Section 5 of this document.
Well Design	OAC 3745-09-07 (A), (B), (C), (E) and (F) Establishes specific surface design requirements, such as height above ground, well vents, well pumps, etc. (Applicable)	Design of the extraction and injection wells will incorporate, to the extent as is appropriate for such wells, the surface design requirements for drinking water wells. The basic design of the groundwater wells will be in accordance with Appendix J of the US EPA-approved *Sitewide CERCLA Quality Assurance Project Plan* and design information in Section 5 of this document.
Priming Wells	OAC 3745-9-08 (C) Pumps may only be primed with potable water. (Applicable)	All wells will be primed with groundwater. Because these wells are not to be used for drinking water, priming with potable water is not necessary. Additionally, using groundwater for well priming will not adversely affect the quality of the GMA groundwater.

Table 3-1 - Applicable or Relevant and Appropriate Requirements and To Be Considered Requirements (Continued)

Category	Requirement	Compliance Strategy
Well Maintenance	OAC 3745-09-09 (A), through (C), (E) through (G) These requirements establish specific maintenance and modification requirements for casing, pumps, and wells. (Applicable)	The casings and tops of wells shall be protected against entrance of contaminants at all times. Deteriorated casings will be replaced or completely filled with grout to prevent contaminants from entering the well. Any part of the pump or connection that malfunctions or is defective will be promptly repaired or replaced as necessary to prevent contaminants from entering the well. If existing wells are used that do not meet the above requirements, they must be improved to meet those requirements prior to use. Buried casing tops will be excavated to expose the casing top and marked as necessary to make them identifiable. Compliance with well maintenance requirements for the injection and extraction wells will be addressed in the O&M Plan.
Well Abandonment	OAC 3745-09-10 Upon completion of the project, wells shall be either completely filled with grout or such other material and will prevent contaminants from entering groundwater. (Applicable)	The abandonment of wells will be performed in accordance with Appendix J of the US EPA-approved *Sitewide CERCLA Quality Assurance Project Plan*.

000031

420

000032

Table 3-1 - Applicable or Relevant and Appropriate Requirements and To Be Considered Requirements (Continued)

Category	Requirement	Compliance Strategy
Fugitive Dust	OAC 3745-17-08 (B) No person shall cause or permit any fugitive dust source to be operated; or any materials to be handled, transported, or stored; or a building or its appurtenances or a road to be used, constructed, altered, repaired, or demolished without taking or installing reasonably available control measures to prevent fugitive dust from becoming airborne. Such reasonably available control measures shall include, but not be limited to, one or more of the following which are appropriate to minimize or eliminate visible particulate emissions of fugitive dust. - The use of water or other suitable dust suppression chemicals for the control of fugitive dust from the demolition of existing buildings or structures, construction operations, the grading of roads, or the clearing of land; or - The periodic application of asphalt, oil, water, or other suitable dust suppression chemicals on dirt or gravel roads and parking lots, and any other surfaces which may cause emissions of fugitive dust. (Relevant and Appropriate)	Dust suppression methods will be used during earth-moving activities to minimize the generation of fugitive dust.

Table 3-1 - Applicable or Relevant and Appropriate Requirements and To Be Considered Requirements (Continued)

Category	Requirement	Compliance Strategy
Noise Control	Noise Control Act (42 USC 4901) Noise Pollution and Abatement Act (42 USC 7641) The public must be protected from noises that jeopardize health and welfare. (Applicable)	This project is not expected to cause noises that jeopardize health and welfare. This assumption will be verified during construction activities.

000033

420

3.2.2 Specific Criteria

The following discipline-specific criteria apply to the SPO/ID systems:

Civil

1) American Association of State Highway and Transportation Officials (AASHTO), GDHS-90, "Policy on Geometric Design of Highways and Streets," 1990, by AASHTO

2) American Society of Civil Engineers (ASCE) 37, "Design and Construction of Sanitary and Storm Sewers," ASCE

3) North American Datum of 1983

4) North American Vertical Datum of 1929

5) Soil Conservation Service (SCS), Soil Survey of Hamilton County, Ohio

6) SCS, "TR-55 Urban Hydrology for Small Watersheds," Technical Release 55, SCS

7) American Water Works Association (AWWA) C 600-93 Installation of Ductile-Iron Water Mains and their Appurtenances

8) AWWA C 906-90 Polyethylene Pressure Pipe and Fittings, 4 Inch through 63 Inch for Water Distribution

9) TM 5 814-2, "Sanitary and Industrial Wastewater Collection - Pumping Stations and Force Mains," U.S. Dept. of Army

10) "Rainwater and Land Development," Ohio Department of Natural Resources, 2nd Edition, 1996

11) Ohio Department of Transportation, Location and Design Manual, Volume Two, Drainage Design

12) Ohio Department of Transportation, Construction and Material Specifications, January 1995

Electrical

1) American Bearing Manufacturers Association (ABMA) 9, Load Ratings and Fatigue Life for Ball Bearings

2) ABMA 11, Load Ratings and Fatigue for Roller Bearings

3) Institute of Electrical and Electronics Engineers (IEEE) 112, Standard Test Procedure for Polyphase Induction Motors and Generators

4) IEEE 812, Standard Definition of Terms Relating to Fiber Optics

5) National Electrical Manufacturers Association (NEMA) MG 1, Motors and Generators

6) NEMA MG 13, Frame Assignments for AC Integral-Horsepower Induction Motors

7) NEMA AB 1, Molded Case Circuit Breakers and Molded Case Switches

8) NEMA ICS 1, Industrial Control and Systems General Requirements

9) NEMA ICS 2, Industrial Control and System Controllers, Contractors, and Overload Relays Rated Not More Than 2000 Volts AC or 750 Volts DC

10) NEMA ICS 4, Industrial Control and Systems Terminal Blocks

11) NEMA ICS 6, Industrial Control and Systems - Enclosures

12) NEMA OS 1, Sheet-Steel Outlet Boxes, Device Boxes, Covers, and Box Supports

13) NEMA WD 1, General Requirements for Wiring Devices

14) NEMA WD 6, Wiring Devices - Dimensional Requirements

15) NEMA 250, Enclosures for Electrical Equipment (1,000 Volts Maximum)

16) NEMA TC 3, PVC Fittings for Use with Rigid PVC Conduit and Tubing

17) NEMA TC 6, PVC and ABS Plastic Utilities Duct for Underground Installation

18) NEMA LA 1, Surge Arresters

19) NEMA WC 7, Cross-Linked-Thermosetting- Polyethylene-Insulated Wire and Cable for the Transmission and Distribution of Electrical Energy

20) NEMA PB 1, Panelboards

21) NEMA PB 1.1, Instructions for Safe Installation, Operation, and Maintenance of Panelboards Rated 600 Volts or Less

22) NEMA ST 20, Dry Type Transformers for General Applications

23) NEMA WD 6, Wiring Devices - Dimensional Requirements

24) NFPA 70, National Electrical Code

25) NFPA 101, Code for Safety to Life from Fire in Buildings and Structures

26) Underwriters Laboratories, Inc. (UL), Electrical Construction Materials Directory

27) UL 360, UL Standard for Safety Liquid-Tight Flexible Steel Conduit

28) UL 486A, UL Standard for Safety Wire Connectors and Soldering Lugs for Use with Copper Conductors

29) UL 510, UL Standard for Safety Polyvinyl Chloride, Polyethylene and Rubber Insulating Tape

30) UL 870, UL Standard for Safety Wireways, Auxiliary Gutters, and Associated Fittings

31) UL 467, UL Standard for Safety Grounding and Bonding Equipment

32) UL 96, UL Standard for Lightning Protection Components

33) American National Standards Institute (ANSI) C80.1, Rigid Steel Conduit-Zinc Coated

34) ANSI C82.1, Ballasts for Fluorescent Lamps - Specifications

35) ANSI C2, National Electrical Safety Code

36) ANSI C135.1, Galvanized Steel Bolts and Nuts for Overhead Line Construction

37) ANSI O5.1, Wood Poles Specifications and Dimensions

38) American Society for Testing and Materials (ASTM) A36/A36M, Standard Specification for Carbon Structural Steel

39) Electronic Industries Association/Telecommunications Industry Association (EIA/TIA) 455-60 Measurement of Fiber or Cable Length Using an OTDR

40) EIA/TIA 455-61 Measurement of Fiber or Cable Attenuation Using an OTDR

41) EIA/TIA 526-14 Optical Power Loss Measurements of Installed Multimode Fiber Cable Plant

42) InterNational Electrical Testing Association (NETA) ATS, Acceptance Testing Specifications for Electrical Power Distribution Equipment and Systems

43) ASTM A475, Standard Specification for Zinc-Coated Steel Wire Strand

44) ASTM A675/A675M, Steel Bars, Carbon, Hot-Wrought, Special Quality, Mechanical Properties

45) ASTM D698, Test Method for Laboratory Compaction Characteristics of Soil Using Standard Effort (12,400 ft-lbf/ft^3)

46) American Wood-Preservers Association (AWPA) C4 Poles - Pressure Process

47) AWPA C25, Standard for the Preservative Treatment of Crossarms by the Pressure Process

48) DOE-ID-10600, Electrical Safety Guidelines

Instrumentation

1) International Society for Measurement and Control, Standards and Recommended Practices

Environmental Safety and Health

1) DOE-STD-1021-93, "Natural Phenomena Hazards Performance Categorization Guidelines for Structures, Systems, and Components"

2) DOE Order 5400.1, "General Environmental Protection Plan"

3) DOE Order 5400.5, "Radiation Protection of the Public and the Environment"

4) DOE Order 5480.10, "Contractor Industrial Hygiene Program"

5) DOE Order 5480.11, "Radiation Protection for Occupational Workers"

6) NFPA 101, Life Safety Code

7) 10 CFR 835, Occupational Radiation Protection

8) DOE/EH-0256T, Radiological Control Manual

9) 29 CFR 1926 Safety and Health Regulations for Construction

10) RM-0021, Safety Performance Requirements Manual

Mechanical

1) American Society of Mechanical Engineers (ASME) B73.1M, Specification for Horizontal End Suction Centrifugal Pumps for Chemical Process

2) American Petroleum Institute STD 650, Welded Steel Tanks for Oil Storage

Piping

1) ASME B31.3, Chemical Plant and Petroleum Refinery Piping

2) American Welding Society D.1.1, Structural Welding Code - Steel

3) Manufacturers Standardization Society, SP-89, Pipe Hangers and Supports Fabrication and Installation Practices

4) American Society for Nondestructive Testing SNT-TC-1A, Recommended Practice

Structural

1) American Concrete Institute 318-89, Building Code Requirements for Reinforced Concrete

2) American Institute of Steel Construction Manual, 9th Edition

3) ASCE 7-95, Minimum Design Loads for Buildings and Other Structures

4) University of California Research Laboratory (UCRL)-53526, Rev. 1, Natural Phenomena Hazards Modeling Project: Extreme Wind/Tornado Hazard Models for Department of Energy Sites

5) UCRL 53852, Rev. 1, Natural Phenomena Hazards Modeling Project: Seismic Hazard Models for Department of Energy Sites

6) American Society for Testing and Materials Standards

3.3 Project-Specific S/RIDs

Standards/Requirements Identification Documents (S/RIDs) which identify 24 functional areas have been prepared for the FEMP (FERMCO 1996). Many of the functional areas apply to programmatic activities which are not specific to remedial design/engineering projects. A General Requirement List (GRL) was prepared which lists all of the S/RIDs which are generally applicable to remedial design/engineering projects (Jordon 1996). This GRL was reviewed in arriving at the project-specific listing of applicable S/RIDs. The following functional areas were excluded from the project-specific S/RIDs:

1) Configuration Management
2) Research and Development/Experimental Activities
3) Management Systems
4) Packaging and Transportation
5) Training and Qualification
6) Human Resources and Industrial Relations
7) Project Controls
8) Public Involvement
9) Emergency Preparedness
10) Maintenance
11) Operations
12) Construction
13) Acquisitions
14) Property Management
15) Financial Management
16) Nuclear and Systems Safety

Only those requirements that apply to the design of the SPO/ID systems are discussed. In some cases, a portion of a functional area (i.e., security) was referenced if it pertained to design. The following subsections provide the identification of applicable project-specific S/RIDs.

3.3.1 Engineering Design

All Engineering Design S/RIDs apply to this design project with the exception of the contractual requirements specified in Requirement 2.3.1 of Engineering Design S/RID in the Fernald Environmental Restoration Management Corporation (FERMCO) Management Plan, as these are considered programmatic. Specific design requirements, such as building codes and design standards, are discussed in Subsection 3.2 of this document.

3.3.2 Environmental Protection

The Environmental Protection S/RIDs which apply to this design project are those included in the ARAR list identified in Subsection 3.1.

3.3.3 Fire Protection

All Fire Protection S/RIDs apply to this design project with the exception of Requirements 6.4.3, 6.4.4, and 6.4.5 of the Fire Protection S/RID in the FERMCO Management Plan.

3.3.4 Occupational Safety and Health

Most Occupational Safety and Health S/RIDs do not apply to this design project as they are not remedial design/engineering specific. Requirements 10.3.4 and 10.3.6 are the only requirements in the Occupational Safety and Health S/RID in the FERMCO Management Plan that are pertinent to this design.

3.3.5 Quality Assurance

All Quality Assurance S/RIDs apply to this design project with the exception of requirements 13.3.1, 13.3.5, 13.3.6, 13.3.7, 13.3.8, 13.3.11, and 13.3.12 of the Quality Assurance S/RID in the FERMCO Management Plan.

3.3.6 Radiological Protection

All Radiological Protection S/RIDs apply to this design project with the exception of Requirements 14.3.2, 14.3.6, 14.4.1, 14.4.3, 14.4.4, 14.4.5, and 14.4.7 through 14.4.10 of the Radiological Protection S/RID in the FERMCO Management Plan.

3.3.7 Security

The programmatic aspects of the Security S/RID do not apply to this design project. However, the design requirements (such as fencing, sign posting, surveillance equipment, etc.) do apply and will be incorporated into the design. Specific applicable requirements include 15.3.6 of the Security S/RID in the FERMCO Management Plan apply.

3.3.8 Environmental Restoration and Waste Management

The Environmental Restoration and Waste Management S/RIDs which apply to this design project are those included in the ARARs list identified in Subsection 3.1.

3.4 Design Considerations

This subsection lists the design considerations which will be addressed in the design of the SPO/ID systems. These design considerations stem from the functional objectives and, along with the ARARS, codes, standards, and DOE Orders identified in Subsections 3.1 and 3.2, provide the basis for Title I and II Design.

3.4.1 Extract Groundwater (SPO)

Flow Inducement

The SPO extraction Well Pumps 1 and 3N will be single speed, submersible pumps capable of providing a nominal flow of 250 and 350 gpm, respectively, to achieve desired levels of plume capture and remediation (DOE 1996a).

The SPO system will be designed for a 15-year lifetime.

Flow Containment and Direction

Each extraction well's effluent will be directed north in separate pipelines to the new SPO valve house where the extracted water can be directed to either treatment or be discharged to the Great Miami River.

Flow control valves will be remotely operated from the AWWT control room.

Parameter Monitoring

Each extraction well will have the capability of effluent sampling at the SPO valve house prior to header mixing.

Instrumentation will include, as a minimum, individual well flow rates, individual well discharge pressure, and valve positions. These parameters will have a remote readout in the AWWT control room.

The existing South Plume Recovery Wells 3924, 3925, 3926, and 3927 will be modified to allow monitoring and control from the AWWT Control Room.

3.4.2 Inject Groundwater (ID)

Establish Water Quality

The ID project must ensure that the injection water quality meets the necessary requirements. To accommodate meeting the quality requirements, modifications must be made to the AWWT Expansion system to provide iron removal capabilities to that system.

Accept Flow

The AWWT Expansion system effluent will be the source of water for the ID system.

The ID system will have a 50,000-gallon capacity injection water supply tank. This injection water supply tank will receive flow from the AWWT Expansion system and will provide net positive suction head to the ID supply pumps.

The injection water supply tank will have level controls which interlock with the ID supply pumps.

Induce Flow

The ID supply pumps will be single speed with a nominal flow of 1,000 gpm each.

The ID system will include two pumps, one normally running and the other in standby mode.

The ID system will be designed for a 15-year lifetime.

Parameter Monitoring

Each injection well will have the capability of influent sampling at the well head.

Instrumentation will include, as a minimum, individual well flowrates, individual well pressure, injection water supply tank levels, supply pump pressure, and valve positions.

000042

Flow Containment and Direction

The underground portions of the ID system will be High Density Polyethylene (HDPE) material. This pipeline will be fully integrated with the AWWT Expansion project and the SFES project. This includes burying portions of this pipeline in a common trench with the pipelines used in the AWWT Expansion and SFES projects.

Inject Treated Groundwater

The injection wells will have a polyvinyl chloride (PVC) casing to minimize cost and a wire-wrapped stainless steel screen to provide better resistance to workover maintenance.

Each injection well will have two injection tubes, each terminating with a restriction orifice and a perforated water distributor. Each tube assembly will be sized to maintain 1 psig pressure at the injection tube inlet to prevent cascading of water into the injection well. One tube assembly will be sized for 100 - 150 gpm, the other for 150 - 200 gpm.

Each injection well will have a level transducer to measure water level within the well casing. This level transducer will provide a signal to secure flow when the water level reaches a preset high or low setpoint.

The five injection wells will have three different casing and screen sizes. These three screen diameters will provide enough data to establish if the well diameter can effectively reduce the long-term operational maintenance cost.

3.4.3 Integrating Operations

Coordination with Ongoing and Planned Site Activities

To allow for optimum use of resources, the SPO/ID systems will use existing system capabilities to the maximum extent possible while limiting the impact on current operations. The physical interfaces were defined in Subsection 2.3.

3.4.4 Assuring Dependability

Providing Physical Security

The SPO and ID wells will lie outside the FEMP's fenced areas. As such, the SPO/ID design will provide for physical safeguards for the protection of exposed equipment.

Operability

The SPO/ID design will consider and incorporate operability concerns. Concerns which will be addressed are:

1) Accessibility - Components will be installed such that they are readily accessible for operation. Extraction and injection wells will have access roads to permit ease of operation.

2) Equipment and Material Selection - Components will be selected such that they are operator friendly and can withstand extended operation.

3) Hydraulic Parameters - The extracted water will contain minor amounts of silt, which is abrasive. Provisions for cleanouts and minimal dead-end piping will be incorporated into the design. Due to numerous wells using a common header, pressure surges and water hammer will likely be common. The selection of valves, controls, and piping materials will consider these phenomena. The rolling terrain and combination of flows may create air pockets in the force main, which would reduce the hydraulic efficiency of the main. Air release mechanisms at the well heads and along high points in the header will be considered.

4) Human Factors - The design will incorporate human factors into the control philosophy and equipment layout to aid the operators in performing operations.

5) Safety - The design will identify required engineered safety measures which help ensure operator safety. As an example, all energy sources that may be required to be isolated for "lock-out" (e.g., valves and switches) will be identified and designed to accept a lock hasp and tag.

Maintainability

The design will consider and incorporate maintainability concerns. Concerns which will be addressed are:

1) Accessibility - Components will be installed such that they are readily accessible for maintenance. Extraction and Injection wells will have access roads to permit ease of maintenance.

2) Equipment and Material Selection - Components will be selected such that they are easily maintained and replacement parts are readily available.

3) Hydraulic Parameters - The extracted water will contain minor amounts of silt, which is abrasive. Provisions for cleanouts and minimal dead-end piping will be incorporated into the design. Due to numerous wells using a common header, pressure surges and water hammer will likely be

common. The selection of valves, controls, and piping materials will consider these phenomena. The rolling terrain and combination of flows may create air pockets in the force main, which would reduce the hydraulic efficiency of the main. Air release mechanisms at the well heads and along high points in the header will be considered.

4) Human Factors - The design will incorporate human factors into the equipment layout to aid maintenance personnel in performing maintenance and repairs.

5) Safety - The design will identify required engineered safety measures which help ensure personnel safety. As an example, all energy sources that may be required to be isolated for "lock-out" (e.g., valves and switches) will be identified and designed to accept a lock hasp and tag.

6) Environmental Protection - Components will be protected from the environment to limit the degradation of components due to environmental conditions.

7) Well Redevelopment - The design will incorporate engineered measures to ensure easier redevelopment of wells.

Constructability

The design will consider and incorporate constructability concerns. The concerns which will be addressed are:

1) Accessibility - The systems will be sited such that the locations are readily accessible for construction.

2) Safety - The design will incorporate measures to help ensure the safety of workers during construction. Among these measures are siting plans to limit interference with existing systems and contamination zones.

3) Site Conditions - The systems will be sited such that construction on steep slopes and other undesirable topographical conditions are minimized.

4) Material Selection - The force mains will need to traverse rolling terrain. The piping materials will have to adapt to numerous bends, both horizontally and vertically.

3.4.5 Ensuring Convenience

Future Expansion

The ID design will provide for the future expansion of this system. The design will consider valving, flanged connections, instrument coordination, and pipeline sizing used in addressing future expansions.

Decontamination and Decommissioning

Systems will be designed to account for future D&D. The design will include measures to allow for the ease of D&D efforts wherever practical.

3.5 Secondary Containment

DOE Order 6430.1A, Division 13, governs the requirements for secondary containment systems. Division 13 applies to Special Facilities, which are nuclear facilities or explosive facilities.

DOE Order 6430.1A defines a nuclear facility as:

> "A facility whose operations include radioactive materials in such a form and quantity that a significant nuclear hazard potentially exists to the employees or the general public."

A safety assessment was performed on the SPO and ID systems by the FERMCO Safety Analysis Department. This safety assessment classified this project as an industrial facility conducting hazardous waste activities. This classification does not meet the definition of a nuclear facility as defined in DOE Order 6430.1A; therefore, secondary containment is not required for the SPO/ID systems and will not be included in its design.

SECTION 4

SYSTEM LOCATION

4.1 ID Siting Basis

The pipeline routing for the ID system was chosen for the following reasons:

1) Fully integrated with planned construction activities on the AWWT Expansion and SFES projects. Portions of the ID system's pipeline will be buried in a common trench with pipelines from these two projects.

2) Eliminate the necessity to route the ID pipeline through the congested corridor between the South Field Area and the Active Fly Ash Pile. This corridor already contains the South Plume force main, a major gas line, the public water supply pipeline, as well as several other pipelines. Further construction through this area is very limited.

3) Ability to expand the ID system in the future. The pipeline and injection water supply tank locations were planned to allow the ease for future expansion of the system with additional injection wells north of the SFES.

4.2 SPO Siting Basis

The pipeline, and electrical and communication subsystems for the SPO system will be routed to minimize any potential impact on the property which is not owned by the FEMP.

Table 4-1 shows the extraction and injection well coordinates. These coordinates are preliminary locations which are within 125- by 125-foot grids as defined by modeling efforts (DOE 1996a). These coordinates will be finalized during Title II Design.

Table 4-1 - Coordinates of Wells

Well Number	Type of Well	Coordinates (NAD 83)	
1	Extraction	N475126.4	E1348337.6
3N	Extraction	N475549.7	E1348334.7
8	Injection	N476206.4	E1347982.4
9	Injection	N476255.2	E1348384.8
10	Injection	N476178.2	E1348857.2
11	Injection	N476316.5	E1349352.9
12	Injection	N476526.0	E1350098.9

SECTION 5

CONTROL PHILOSOPHY AND PROCESS DESCRIPTION

5.1 ID Process Description

The ID system consists of five injection wells located north of Willey Road. These wells will have a PVC casing with a stainless steel wire wrapped screen. It is planned that all five wells will be injecting treated groundwater at the target rate of 200 gpm; however, to increase system flexibility, each well will be constructed with two PVC injection tubes. One injection tube will be sized for injecting water at 150 to 200 gpm and the other injection tube will be sized for 100 to 150 gpm flow rate. Figure 5-1 shows a typical injection well construction.

With the exception of entrance velocity and screen length, the design criteria used for extraction wells applies to injection wells. The screen open area and screen length must be optimal for injection wells and the entrance velocity should be 0.05 feet/sec. Historically, plugging in injection wells has been identified as a potential problem. This problem is being addressed by using larger screens and establishing proper injection water quality.

The more open area the screen has the longer it will take to plug. The open area in a screen can be varied using the screen diameter, the slot size, or the screen length. One of the objectives of the ID is to determine if the screen diameter will have a considerable affect on maintaining the performance of injection wells. To gather appropriate data the injection wells will have different well diameters. One well will be 8 inches in diameter, one well will be 12 inches in diameter, and three wells will be 16 inches in diameter. It is anticipated that all three well sizes will perform adequately, but the smaller sizes may need more frequent workovers.

Injection well 8 is located in an area by Paddys Run where the glacial overburden has been eroded away thus making the depth to the static water level from the surface about 18 feet. The other injection wells' depth to static water level is about 58 feet. Injection well 8 will have the 8-inch diameter casing and screen. This decision was based upon if the well fails and needs replacement, it would be the least expensive to replace due to its shallow well depth. Injection well 9 will have a 12-inch diameter casing and screen and Injection Wells 10 through 12 will have 16-inch diameter casings and screens.

Sieve samples will be collected and analyzed during drilling of the injection wells to determine the slot size for the injection well screens. The length of screen will be calculated for a pumping rate of 200 gpm at an entrance velocity of 0.05 ft/sec and then doubled. Historically it has been documented that injection well screens should be twice as long as an extraction well screen pumping at the same rate to prolong the interval between well maintenance actions due to plugging (Driscoll 1986).

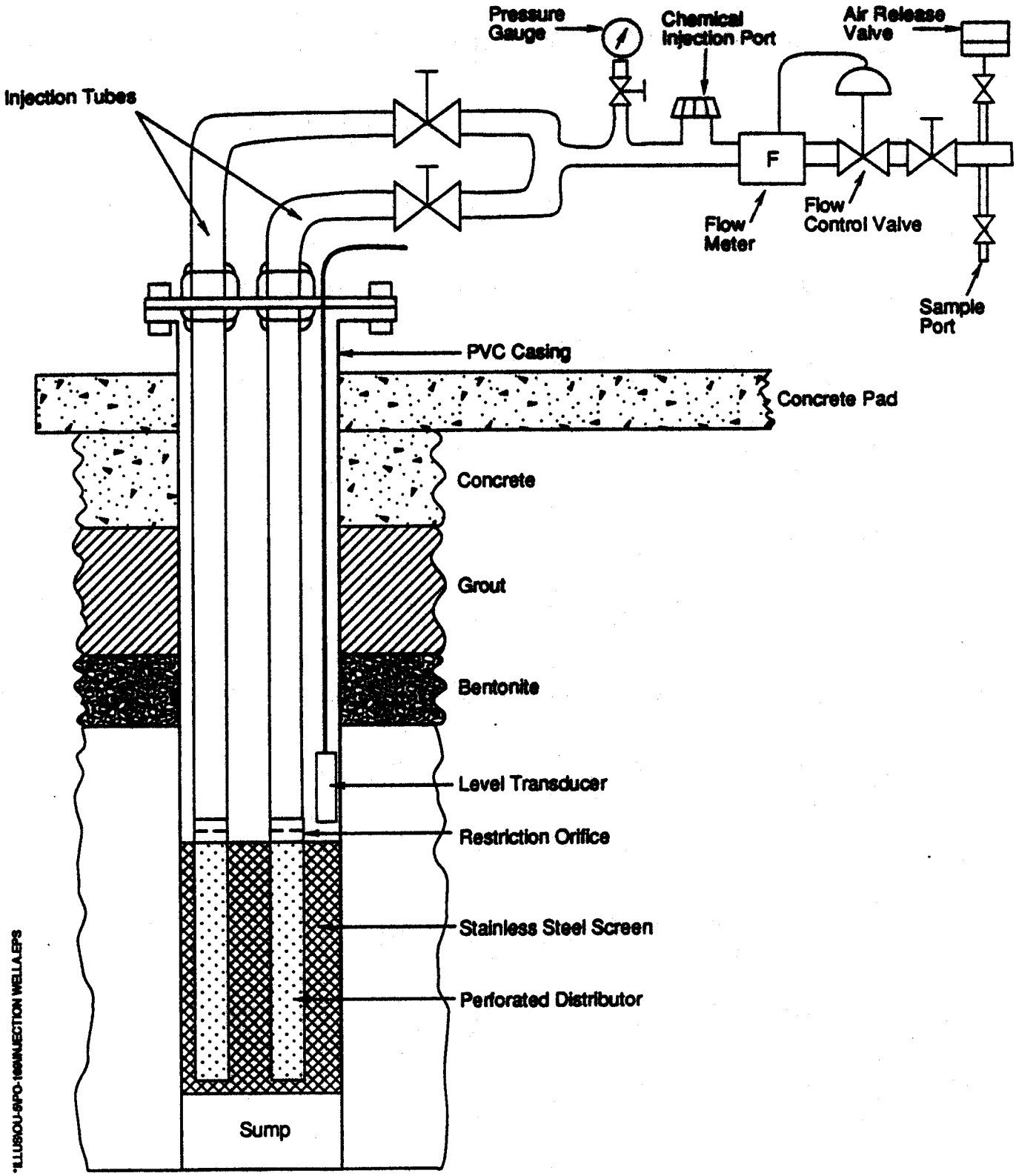

Figure 5-1 - Injection Well

The top of the screen will be positioned approximately 5 feet below the lowest recorded water level for the area. A 5-foot sump will be installed at the base of the screen.

To prevent the premature degradation of injection well performance, the injection water ferric iron content will be maintained <0.1 ppm (IT 1996). The AWWT Expansion system will provide the source of treated groundwater for injection; therefore, an aeration tank will be included at the influent of the AWWT Expansion process train. This aeration tank will consist of an aeration blower, an agitator, and an air sparge ring. The aeration tank will aerate the incoming groundwater thereby oxidizing the water and causing the ferric iron to oxidize into ferrous iron, which will precipitate out. This ferrous iron precipitant will then be removed in the AWWT Expansion system's multimedia filters.

The effluent from the AWWT Expansion system will be used as the source of injection water. This effluent will be piped to the Injection Water Storage Tank (IWST) which will be located northwest of the existing South Plume Valve House. This 50,000 gallon tank will serve as surge capacity and will hydraulically isolate the ID from the other treatment and extraction systems. The Injection Water Supply Pumps will take a suction on the IWST and provide the necessary motive force to supply injection water at the rate of 1,000 gpm (200 gpm each well). There will be two pumps installed with flanged connections, allowing a third to be added should the injection system be expanded. The normal running configuration is to have one pump running and the other standing by.

The treated groundwater will be directed to each injection well. At each injection well head a flow meter will operate in conjunction with a flow control valve to maintain a preset nominal 200 gpm flow rate into the well. This flow will be directed down one of the two injection tubes (nominally, the 150-200 gpm tube). The restriction orifice at the bottom of the tube will be sized to maintain a 1 psi pressure at the injection tube inlet thus minimizing the cascading of the water down the injection tube and possible air entrainment. A perforated distributor will then distribute flow across the well screen.

5.2 ID Control Philosophy

The following instrumentation and controls shall be provided for the ID system:

1) A Hand-Off-Auto (HOA) switch shall be provided locally at each Injection Water Supply Pump, the aeration blower, and the aeration tank agitator. Placing the HOA switch in the HAND position will cause the associated motor to run until the switch is placed in the OFF or AUTO position. Placing the HOA switch in the AUTO position will cause the associated motor to be operated by the DCS from the AWWT Control Room until the HOA switch is placed in the OFF or HAND position. The DCS will provide indication when the HOA switches are in the AUTO position. A start/stop pushbutton shall be configured at the operator's terminal for each motor. A running indication will be provided both locally at the operator's terminal and remotely through the DCS.

2) A pressure indicating transmitter shall be provided to monitor the discharge pressure of each new injection water supply pump. This transmitter will be used solely for indication and will not influence any automatic functions.

3) All isolation valves will be locally operated.

4) Each injection well will be controlled by a Flow Control Valve (FCV). This FCV will be locally controlled and will use the operator input for flow and the flow measurement provided by the flow element to modulate the FCV to maintain the set flow. This FCV will also receive a signal from the pressure transducer located in each injection well between the casing and the injection tubes. This transducer will send a signal to close the FCV on a high or a low water level. A pressure indicating transmitter will monitor injection well supply pressure and close the FCV prior to reaching a negative injection pressure.

5) A sample port will be provided at each injection well to allow local collection of samples.

6) An air release valve will be provided for each injection well to provide for the release of any air which becomes entrained into the injection water stream.

7) An orifice will be provided at the bottom of the injection tubes to provide a back pressure on the injection tube designed to prevent a cascading effect down the injection tube which could cause air entrainment.

8) A chemical injection port will be provided to allow the addition of chemicals which may be necessary during well maintenance.

9) A Level Control Valve (LCV) will be installed to control level in both the aeration tank and the injection water supply tank. This LCV will be set to maintain a nominal 80 percent level in their respective tanks. A Level Indicating Transmitter (LIT) will input the tank level signal to the LCV. Attaining a high level alarm on the LIT will cause the LCV to shut. A low level alarm on the injection water supply tank will secure the injection water supply pumps.

5.3 SPO Process Description

The off-site groundwater extraction system will consist of six extraction wells located south of Willey Road. Four of these extraction wells are existing wells which were constructed under the South Plume Removal Action. These four wells will be upgraded to provide remote monitoring and control from the AWWT Control Room.

The two new wells will be installed using a cable tool drilling rig. These wells will have a stainless steel casing and a stainless steel wire wrapped screen. Well 1, which will be extracting water at the rate of 250 gpm, will have a 10 inch diameter well casing. Well 3N, which will be extracting water at the rate of 350 gpm, will have a 12 inch diameter casing. The completion method and screen slot size will be determined by conducting sieve analysis on split spoon samples collected through the target screen interval. These wells will have submersible turbine pumps with standard fitted multi-stage bowls. These pumps will have water cooled motors.

A new SPO Valve House will be constructed north of Willey Road just east of the existing South Plume Force Main. SPO wells 1 and 3N will have independent effluent pipelines which will transport the extracted groundwater to the SPO Valve House. All monitoring and control instrumentation associated with wells 1 and 3N will be housed in the SPO Valve House. In the SPO Valve House the effluent from wells 1 and 3N will have the capability of being individually directed to either treatment or to discharge.

The discharge from the four existing South Plume Recovery wells is combined into the existing South Plume Force Main. This force main will be rerouted above ground into the SPO Valve House where it will be piped and valved to allow its flow to be directed to either treatment or discharge.

The portion of the South Plume Force Main which is north of the SPO Valve House will be utilized as the dedicated treatment header. A new 12 inch header will be routed from the SPO Valve House northeast to tie into the SFES discharge header for discharging directly into the Great Miami River.

5.4 SPO Control Philosophy

The following instrumentation and controls shall be provided for the SPO system:

1) An HOA switch shall be provided locally at each well head. Placing the HOA switch in the HAND position will cause the associated pump motor to run until the switch is placed in the OFF or AUTO position. Placing the HOA switch in the AUTO position will cause the associated motor to be operated by the DCS from the AWWT control room until the HOA switch is placed in the OFF or HAND position. The DCS will provide indication when the HOA switches are in the AUTO position. A start/stop pushbutton shall be configured at the operator's terminal for each motor.

2) A pump running indication will be provided both locally at the operator's terminal and remotely through the DCS.

3) A pressure indicating transmitter shall be provided in the SPO Valve House which monitors the discharge pressure for each new extraction well. A low pressure switch shall shut off the pump

in the event of a line break, or other upstream improper flow condition. A high pressure switch shall shut off the pump in the event of an improper downstream valve alignment.

4) All isolation valves will be locally operated with positions switches which provide remote monitoring of valve position.

5) Each extraction well will be controlled by an FCV. This FCV will be remotely controlled via the DCS and will use the operator input for flow and the flow measurement provided by the flow element to modulate the FCV to maintain the set flow. This FCV will have a remote readout of "shut" position.

6) A sample port will be provided in each new extraction well's effluent to allow local collection of samples. The results of these samples in relation to other groundwater streams will determine the direction of flow to either treatment or discharge.

7) An air release valve will be provided for each new extraction well effluent to provide for the release of any air which becomes entrained into the groundwater stream.

SECTION 6

COMPONENT DESIGN BASIS

6.1 Wells

The SPO system contains extraction wells. The ID system contains injection wells.

6.1.1 Extraction Wells

Function: Provide a vertical conduit to target zones of the Great Miami Aquifer through which contaminated groundwater can be extracted.

Basis: Extraction wells are required to restore contaminated portions of the Great Miami Aquifer to below 20 ppb uranium.

Description: Stainless steel casing with stainless steel wire-wrapped well screen. Slot size to be determined by sieve analysis during well installation. Wells will have a 5-foot sump at the bottom of the screen.

6.1.2 Injection Wells

Function: Provide a vertical conduit to target zones of the Great Miami Aquifer through which treated groundwater can be injected.

Basis: Injection wells are required to increase flushing rates to accelerate remediation of contaminated portions of the Great Miami Aquifer to below 20 ppb uranium.

Description: PVC casing with stainless steel wire-wrapped well screen. Slot size to be determined by sieve analysis during well installation. Wells will have a 5-foot sump at the bottom of the screen.

6.1.3 Injection Tubes

Function: Provide flow containment and direction from the well head down to the target zones of the Great Miami Aquifer.

Basis: Provide flow containment and maintaining a minimum 1.0 psi pressure at the injection tube outlet to minimize cascading.

Description: Two PVC tubes, each terminating in a restriction orifice and a perforated distributor. One assembly sized for 100-150 gpm; the other sized for 150-200 gpm.

6.2 Pumps

6.2.1 SPO Extraction Pumps

Function: To extract water from SPO extraction wells and provide the motive force for transport to treatment or discharge.

Basis: Provide sufficient motive force to maintain 600 gpm combined extraction capacity with sufficient head to transport extracted water to either treatment or discharge.

Description: Electric motor driven, submersible turbine pumps.

6.2.2 ID Injection Water Supply Pumps

Function: Provide motive force to transport water to the ID injection wells.

Basis: Provide sufficient motive force and capacity to maintain 1,000 gpm injection capacity.

Description: Electric motor driven, horizontal centrifugal pumps.

6.3 Tanks

6.3.1 ID Injection Water Supply Tank

Function: Provide water supply for injection well field.

Basis: Provide a surge capacity for minor fluctuation in groundwater supply and hydraulically isolate the ID system from the AWWT combined effluent.

Description: 50,000 gallon capacity, vertical, cylindrical tank constructed from carbon steel and mounted on a concrete pad.

6.3.2 AWWT Expansion Aeration Tank

Function: Provide aeration to allow iron removal by the AWWT Expansion system to ensure appropriate water quality prior to injection.

Basis: Provide adequate aeration to reduce iron level from approximately 0.4 ppm to ≤0.1 ppm (IT 1996).

Description: The system will include a new 10,000 gallon carbon steel tank, an electric motor-driven blower supplying air to a sparge air ring in the tank, an electric motor-driven agitator for the tank, and a turn-down vent to atmosphere.

6.4 Piping

6.4.1 SPO Effluent Line

Function: To transport groundwater to the new SPO valve house for eventual treatment at AWWT or discharge to the Great Miami River.

Basis: Maximum working pressure outside the well head will be kept below 150 pounds per square inch gauge (psig). The discharge lines for each well are sized for their respective flow rates.

Description: Proposed effluent line will be HDPE pipe tied into the existing 20-inch HDPE force main with fused joints.

6.4.2 ID Supply Line

Function: To transport treated water to injection wells.

Basis: To convey up to a maximum flow of 200 gpm to each injection well. Working pressure will be such that pipe friction and elevation differences are overcome and a slight positive pressure is maintained at the well head. Maximum pressure will not exceed 150 psig.

Description: Portions of the buried HDPE pipe with fused joints will be located in a common trench with the 12-inch HDPE pipe from the AWWT Expansion and with the GW 20-inch pipe from the SFES. Pipe will be routed to wells from these other common corridors.

6.4.3 South Plume Force Main

Function: Transport extracted groundwater from the South Plume Removal Action extraction wells to the SPO valve house and transport water from combined SPO system to treatment.

Basis: Determined during the South Plume Removal Action design.

Description: Existing 20-inch buried HDPE force main with fused joints.

6.5 Enclosures

6.5.1 SPO Valve House

Function: Provide shelter and operating space for valving and instrumentation associated with SPO wells 1 and 3N and valving associated with directing the effluent from the South Plume Recovery Wells to either treatment or discharge.

Basis: To withstand structural loads and provide minimum piping clearances.

Description: Pre-engineered, shop fabricated, metal building to be placed on concrete slab.

6.6 Cleanouts

Function: A watertight facility to contain valves and allow for maintenance of the pipelines.

Basis: Wyes with gate valves and cleanout ports to grade to allow for draining off water in the pipe and for inserting maintenance equipment and tools.

Description: Valves to be steel/cast iron body with flanged ends attached to ductile iron pipes. The ductile iron pipes to be connected to the HDPE pipe. Valves should not create sudden surges in the flow in the pipeline.

6.7 Instrumentation

6.7.1 SPO Extraction Well Flow Meters/Transmitter

Function: Provides local and remote flow indication for each SPO Extraction Well. Signal shall be transmitted to the AWWT DCS for flow control and flow totalization.

Basis: To measure optimization well flow and provide output signal to control the extraction flowrate.

Description: Flow Meter, 0 to 500 gpm flow range, magflow type with 4 to 20 mA dc signal output. Meter output signal shall be linear with respect to flowrate with accuracy of ± 2 percent or better.

6.7.2 SPO Extraction Well Pump Discharge Pressure Transmitter

Function: Provides means to indicate and transmit the discharge pressure of each SPO well.

Basis: Measures each SPO well pump discharge pressure locally at each pump and remotely at the AWWT control room. High and low pressure interlocks shall be provided to shut-off pumps.

Description: Pressure indicating transmitter with 4 to 20 mA dc signal output, linear with respect to pressure, and accuracy of ±2 percent or better.

6.7.3 SPO Extraction Well Pump Flow Control Valve

Function: Provides flow control for the water extraction pumping rate.

Basis: Ensures operational efficiency with minimal operator involvement by using the flow meter signal to control valve position.

Description: Electric actuated ball valve with fully closed limit switches. A 4 to 20 mA dc input signal shall be provided to the control valve.

6.7.4 ID Injection Well Flow Meters/Transmitters

Function: Provides local flow indication for each ID Injection Well.

Basis: To measure injection well flow and provide output signal to control the injection flowrate.

Description: Flow Meter, 0 to 500 gpm flow range, magflow type with 4 to 20 mA dc output. Meter shall be linear with respect to flow with accuracy of ±2 percent or better.

6.7.5 ID Injection Well Pressure Transmitters

Function: Provides means to indicate the discharge pressure for each ID well.

Basis: Measures each ID well discharge pressure locally at each well. Provides means to measure available pressure to operate the associated pipeline.

Description: Pressure indicating transmitter with 4 to 20 mA dc output, linear with respect to pressure, and an accuracy of ±2 percent or better. Low pressure interlock shall be provided to close the flow control valve.

6.7.6 ID Injection Well Flow Control Valves

Function: Provides flow control for the water injection rate.

Basis: Ensures operational efficiency with minimal operator involvement by using the flow meter signal to control valve position.

Description: Electric actuated ball valve with fully closed limit switches. A 4 to 20 mA dc input signal shall be provided to the control valve.

6.7.7 ID Injection Supply Pump Discharge Pressure Transmitters

Function: Provides means to indicate and transmit the discharge pressure for each ID pump.

Basis: Measures each ID pump discharge pressure locally at each pump and remotely at the AWWT Control room. High and low pressure interlocks shall be provided to shut-off the pumps.

Description: Pressure indicating transmitter with 4 to 20 mA dc output, linear with respect to pressure, and an accuracy of ±2 percent or better.

6.7.8 ID Injection Well Level Transmitters

Function: Provides a means to indicate water level for each ID well.

Basis: To measure injection well level and provide an output signal.

Description: Differential pressure transmitter with a 4 to 20 mA dc output, linear with respect to level and accuracy of ±2 percent of better. Low- and high-level interlock shall be provided to close flow control valve.

6.7.9 ID Injection Water Supply Tank Level Control Valve

Function: Provides water level control for the ID Injection Water Supply Tank.

Basis: Ensures operational efficiency with minimal operator involvement by using the level transmitter signal to control valve position.

Description: Electric actuated butterfly valve with fully opened and fully closed limit switches. A 4 to 20 mA dc input signal shall be provided.

6.7.10 ID Injection Water Supply Tank Level Transmitter

Function: Provides local and remote level indication for the ID Injection Water Supply Tank. Signal shall be sent to the AWWT DCS for level control.

Basis: Indicates tank level and provides output signal to position the level control valve.

Description: Pressure (Level) Indicating Transmitter with 4 to 20 mA dc output signal, linear with respect to level, and an accuracy of ±2 percent or better.

6.7.11 AWWT Expansion Aeration Tank Level Control Valve

Function: Provides water level control for the Aeration Tank.

Basis: Ensures operational efficiency with minimal operator involvement by using the level transmitter signal to control valve position.

Description: Pneumatic actuated ball valve. A 4 to 20 mA dc input signal shall be provided.

6.7.12 AWWT Expansion Aeration Tank Level Transmitter

Function: Provides local and remote level indication for the Aeration Tank. Signal shall be sent to the AWWT DCS for level control.

Basis: Indicates tank level and provides output signal to position the level control valve.

Description: Pressure (Level) Indicating Transmitter with 4 to 20 mA dc output signal, linear with respect to level, and an accuracy of ±2 percent or better.

6.7.12 Remote Terminal Units

Function: To collect analog and discrete signals for respective SPO well and Tank instrumentation. Signals multiplexed and transmitted, via two wire system and existing SFES communication system, to the AWWT DCS.

Basis: To reliably transmit analog and discrete signals to the AWWT DCS, such that AWWT operators may assess operation of equipment and control operation of the optimization and injection systems.

Description: Analog and discrete input/output modules, associated remote hardware, and two wire communication system configured to interface with existing AWWT DCS. The existing AWWT DCS was manufactured/provided by Bailey-Fischer & Porter Company.

6.8 Electrical

6.8.1 Electrical Distribution System

Function: To provide reliable electrical power at the required voltage and ampacity for the optimization and injection electrical loads.

Basis: To be sized and designed for the capacity requirements of each optimization and injection electrical load.

Description: Electrical service shall be provided from existing 13.8 kV and 34.5 kV CG&E lines on Paddys Run Road and Willey Road. Pole-mounted distribution transformers and panelboards shall be installed as required to serve the loads.

6.9 Roads

Function: To provide access to the wells and the valve houses for construction, operation and maintenance activities.

Basis: To support a truck-mounted well drilling rig (assume AASHTO WB-40 design vehicle and H-20 load) for drilling the extraction wells and access for maintenance vehicles (assumed to be standard pickup trucks). No appreciable traffic volume is anticipated on the service roads. Access from existing site roads and route through uncontaminated areas. Avoid wetlands, gullies, and other undesirable terrain. Drainage shall be designed for the 25-year, 24-hour storm. Entrance onto public roads shall have adequate sight distance. Road geometry based on 25 miles per hour design speed (AASHTO GDHS-90). Use Ohio Department of Transportation Construction and Material Specifications as the basis for material specifications and construction standards.

Description: Consideration should be given to using bituminous concrete for permanent primary roads. Service roads should be crushed aggregate. For construction and for the base course, use a crushed aggregate roadway, 12 feet wide with filter fabric. Supplement crushed aggregate with wood mats where road crosses contaminated or unsuitable subgrade.

SECTION 7

PATH FORWARD

This document serves as a summary Title I Design document. Title I Design provides summary design information which is used to obtain agreement between interested parties on the intended objectives to be met and the process by which those functions will be performed. This Title I Design is sequenced to allow comments to be addressed early in the detailed design phase.

All comments received on this preliminary design will be addressed using documented comment resolutions and the agreed upon resolutions will be incorporated into the detailed (Title II) design which consists of final drawings and specifications for procurement and construction. Title II design ends the design phase and normally allows the beginning of the construction phase. The Title II design will undergo various interim design reviews, one of which is the submittal of the pre-final package to the US EPA for review and comment. Upon resolving all pertinent comments, the pre-final package will be revised and issued certified for construction to allow the construction phase to begin.

SECTION 8

REFERENCES

(FERMCO 1996) Fernald Environmental Restoration Management Corporation, May 1996. *FERMCO Policies and Requirements Manual*, RM0016, Fernald Environmental Management Project, Fernald, Ohio.

(Jordon 1996) Jordon, D., June 13, 1996. PARSONS letter to I. Harden. Subject: Correction to PARSONS Generic Requirement List. PARSONS ID# 26:000:091:0128-96.

(DOE 1995) United States Department of Energy, 1995, Draft. *South Field Injection Test Report*, Fernald Environmental Management Project, Fernald Area Office, Fernald, Ohio.

(IT 1996) IT Corporation, April 1996. *Geochemical Analysis and Modeling of Waters Injected into the Great Miami Aquifer*, Fernald Environmental Restoration Management Project, Fernald, Ohio.

(DOE 1996a) United States Department of Energy, 1996. *Baseline Remedial Strategy Report, Remedial Design for Aquifer Restoration (Task 1)*, Revision A, Fernald Environmental Management Project, Fernald Area Office, Fernald, Ohio.

(DOE 1996b) ———, 1996. *Operable Unit 5 Remedial Design Work Plan*, Fernald Environmental Management Project, Fernald Area Office, Fernald, Ohio.

(Driscoll 1996) Driscoll, F. G., 1986. *Groundwater and Wells*, Second Edition, Johnson Division, St. Paul, MN.

APPENDIX A

PERFORMANCE GRADES

APPENDIX A
PERFORMANCE GRADES

Performance grades are determined to classify the activity or function of systems, structures, and components. This classification subsequently determines the level of detail and resource allocation required for analysis, documentation, and engineering principles that apply to the system, structure, or component. This classification ensures that the level of control is commensurate with the system, structure, or component's relative importance to safety, mission, life cycle stage, and complexity of the overall facility. The performance grades range in importance from 1 being highest to 5 being just standard importance.

Table A-1 - Performance Grade (PG) Evaluation

Date Prepared: 09/20/96 Div.: ARP

Facility/Project: South Plume Optimization and Injection Demonstration HC Assigned: Standard Industrial Hazard Facility (SA:96-0116)

#	SSC	Purpose/Function	PG
1	Extraction Wells	Provide a vertical conduit to target zones of the Great Miami Aquifer through which contaminated groundwater can be extracted.	1 2 3 4 5
2	Injection Wells	Provide a vertical conduit to target zones of the Great Miami Aquifer through which treated groundwater can be injected.	1 2 3 4 5
3	Injection tubes	Provide flow containment and direction from the well head down to the target zones of the Great Miami Aquifer.	5
4	SPO Extraction Pumps	To extract water from SPO extraction wells and provide the motive force for transport to treatment or discharge.	1 2 3 4 5
5	ID Injection Water Supply Pumps	Provide motive force to transport water to the ID injection wells	1 2 3 4 5
6	ID Injection Water Supply Tank	Provide water supply for injection well field.	1 2 3 4 5
7	AWWT Expansion Aeration Tank	Provide aeration to allow iron removal by the AWWT Expansion system to ensure appropriate water quality prior to injection.	1 2 3 4 5

Table A-1 - Performance Grade (PG) Evaluation (Continued)

#	SSC	Purpose/Function	PG
8	SPO Effluent Line	To transport groundwater to the new SPO valve house for eventual treatment at AWWT or discharge to the Great Miami River.	1 2 3 4 5
9	ID Supply Line	To transport treated water to injection wells.	1 2 3 4 5
10	South Plume Force Main	To transport extracted water from the South Plume Removal Action wells to the SPO valve house and transport water from combined SPO system to treatment.	1 2 3 4 5
11	SPO Valve House	Provide shelter and operating space for valving and instrumentation associated with SPO wells 1 and 3N and valving associated with directing the effluent from the South Plume Recovery Wells to either treatment or discharge.	1 2 3 4 5
12	Cleanouts	Provide a watertight facility to contain valves and allow for maintenance.	1 2 3 4 5
13	SPO Extraction Well Flow Meters/Transmitter	Provides local and remote flow indication for each SPO Extraction Well. Signal shall be transmitted to the AWWT DCS for flow control.	1 2 3 4 5
14	SPO Extraction Well Pump Discharge Pressure Transmitter	Provides means to indicate and transmit the discharge pressure of each SPO well.	1 2 3 4 5
15	SPO Extraction Well Pump Flow Control Valve	Provides flow control for the water extraction pumping rate.	1 2 3 4 5
16	ID Injection Well Flow Meters/ Transmitters	Provides local flow indication for each ID Injection Well.	1 2 3 4 5
17	ID Injection Well Pressure Transmitters	Provides means to indicate the discharge pressure for each ID well.	1 2 3 4 5
18	ID Injection Well Flow Control Valves	Provides flow control for the water injection rate.	1 2 3 4 5

Table A-1 - Performance Grade (PG) Evaluation (Continued)

#	SSC	Purpose/Function	PG
19	ID Injection Supply Pump Discharge Pressure Transmitters	Provides means to indicate and transmit the discharge pressure for each ID pump.	1 2 3 4 5
20	ID injection Well Level Transmitters	Provides means to indicate water level for each ID well	1 2 3 4 5
21	ID Injection Water Supply Tank Level Control Valve	Provides water level control for the ID Injection Water Supply Tank.	1 2 3 4 5
22	ID Injection Water Supply Tank Level Transmitter	Provides local and remote level indication for the ID Injection Water Supply Tank. Signal shall be sent to the AWWT DCS for level control.	1 2 3 4 5
23	AWWT Expansion Aeration Tank Level Control Valve	Provides water level control for the Aeration Tank.	1 2 3 4 5
24	AWWT Expansion Aeration Tank Level Transmitter	Provides local and remote level indication for the Aeration Tank. Signal shall be sent to the AWWT DCS for level control	1 2 3 4 5
25	Remote Terminal Units	To collect analog and discrete signals for respective SPO Well and Tank instrumentation.	1 2 3 4 5
26	Electrical Distribution System	To provide reliable electrical power at the required voltage and ampacity for the optimization and injection electrical loads.	1 2 3 4 5
27	Roads	To provide access to the wells and the valve houses for construction, operation and maintenance activities.	1 2 3 4 5

APPENDIX B

TITLE I SPECIFICATIONS

APPENDIX B
TITLE I SPECIFICATIONS

B.1 Division 2 - Site Work

The Division 2 - Site work specification will include:

1) Site Preparation
2) Earthwork
3) Slope Protection and Erosion Control
4) Paving and Surfacing
5) Effluent Piping
6) Storm Drainage
7) Fences and Gates
8) Landscaping and Seeding

B.1.1 Site Preparation

The piping will be routed to minimize the amount of clearing required. Perimeter sediment control measures will be specified to be installed prior to beginning any clearing or earthwork. Work will be specified to be done in accordance with Ohio Department of Transportation (ODOT) standards. Fence material and topsoil will be removed and salvaged for reuse. Fernald Environmental Management Project (FEMP) standards for waste material will be specified for material that cannot be reused and must be removed from the work zone.

B.1.2 Earthwork

Earthwork shall include all grading, excavation, trenching, and filling, and shall be specified to conform to ODOT standards. Trenching shall also conform to Occupational Safety and Health Administration standards. Where feasible, slopes should be a minimum of 0.5 percent for impervious surfaces, 2 percent for vegetated surfaces, and no greater than 3H:1V. Temporary access over contaminated or unstable soil will be done with stone aggregate and wood mats.

B.1.3 Slope Protection and Erosion Control

This includes temporary measures to prevent erosion and control sediment during construction. Some measures will need to be installed prior to any clearing or earthwork being performed. During construction, additional measures will be required, such as around new catch basins. All erosion and

sediment control measures will require maintenance during construction. Ohio Department of Natural Resources Rainwater and Land Development standards for control measures will be specified.

B.1.4 Paving and Surfacing

All paving and surfacing methods, materials, design, and details will conform to ODOT standards. The American Association of Highways and Transportation Officials *A Policy on Geometric Design of Highways and Streets* 1990 (GDHS-90) will be used as a reference for alignment. The design vehicle will be WB-40. Unless conditions dictate otherwise, the minimum slope shall be 0.50 percent.

B.1.5 Effluent Piping

The majority of the groundwater piping materials will be High-Density Polyethylene (HDPE) except at transitions required at valves, meters, structures, etc. where steel pipe or ductile iron will be used. All groundwater lines shall have a minimum depth of cover of 3.5 feet for frost protection. Layout shall minimize the amount of line under pavement. Maintain 10 feet horizontal separation from potable water. If laid closer than 10 feet, the crown of the effluent line shall be 18 inches below the bottom of the potable water line. Thrust blocks are required for all lines 3 inches or greater. Gate valves or post indicator valves shall be installed at line intersections and selected points throughout the distribution system to provide control over the service area in accordance with United States Department of Energy (DOE) Order 6430.1A. Effluent lines crossing under existing drainage courses are to be encased in concrete.

B.1.6 Storm Drainage

New systems will be designed for the 25-year, 24-hour storm. Open channels will use the 5-year storm for evaluating velocity. Culvert material will be corrugated HDPE with smooth interior, unless design considerations dictate otherwise.

B.1.7 Fences and Gates

Fencing shall be limited to that required for safety, physical security, and activity control. Temporary fencing shall be used during construction. The Fernald Environmental Restoration Management Corporation is responsible for radiation control fencing. Existing fence material that is to be removed shall be salvaged for reuse. New fences and hardware shall be standard chain link fabric with three strands of barbed wire with a total fence height of 8 feet. The integrity of site perimeter security fencing shall be maintained. DOE and FEMP standards for fencing will be followed.

B.1.8 Landscaping and Seeding

All areas disturbed during construction, not being surfaced during construction shall be stabilized with topsoil, seed and mulch, or sod. Sod shall be specified if conditions warrant its use, such as velocity in channels. Supplements to the soil shall be specified if necessary. Seed and supplement rates and materials shall conform to ODOT standards. Temporary seeding of exposed soil, per ODOT standards, shall be required if the area is not expected to be worked for 30 days.

B.2 Division 3 - Concrete

The Division 3 - Concrete specification will include:

1) Concrete
2) Concrete Floor Finishing

Concrete

The cast-in-place concrete for foundations will have 3,000 pounds per square inch (psi) and slab on grade will have 4,000 psi compressive strength at 28 days per American Concrete Institute (ACI) 318. Formwork will be designed, fabricated, erected, used, and removed in accordance with ACI 301. All reinforcing bars will be new deformed billet steel conforming to American Society for Testing and Materials (ASTM) A615, Grade 60. All welded wire fabric will conform to ASTM A185. Water stops will be fabricated from a plastic compound the basic resin of which will be polyvinyl chloride. Grout for setting structural members and/or embedded items in or on hardened concrete will consist of approved nonshrink, nonmetallic grout.

Concrete Floor Finishing

Finish on the concrete floor surfaces will be in accordance with ACI 301 and 302. Floors will be sloped uniformly to drains at 1/8 inch per foot unless noted otherwise. Exposed surface areas will be finished with steel trowel. Floor surfaces will be sealed by applying sealer in accordance with manufacturer's instructions.

B.3 Division 5 - Metals

The Division 5 - Metals specification will include:

1) Metal Fabrications

Metal Fabrications

Structural steel will conform to ASTM A-36 and will be designed, detailed, fabricated, and erected in accordance with the American Institute of Steel Construction (AISC) specification and code of standard practice. Bolts used to connect structural members will be high-strength steel bolts and will conform to ASTM A-325. Anchor bolts will conform to ASTM A-36. All welding will conform to the American Welding Society (AWS) specification AWS D.1.1. All fabricated carbon steel will be painted with one shop coat of primer.

B.4 Division 7 - Thermal and Moisture Protection

The Division 7 - Thermal and Moisture Protection specification will include:

1) Joint Sealers

Joint Sealers

This section includes preparing substrate surfaces and furnishing and installing joint backing materials and sealant.

B.5 Division 8 - Doors and Windows

The Division 8 - Doors and Windows specification will include:

1) Standard Steel Doors and Frames
2) Hardware

Standard Steel Doors and Frames

This section includes providing steel doors and associated frames as per the drawings.

Hardware

This section provides all door hardware and locking devices. Locking devices to be according to FERMCO's Grand Master System.

B.6 Division 9 - Finishes

The Division 9 - Finishes specification will include:

1) Painting

Painting

This section provides for furnishing all labor, materials, equipment, tools, and services required for all painting work as required by drawings and/or specified. This includes piping, structural supports, etc.

B.7 Division 10 - Specialties

The Division 10 - Specialties specification will include:

1) Metal Wall Louvers

Metal Wall Louvers

This section provides for the metal wall louvers which are to be installed in the SPO valve house.

B.8 Division 13 - Special Construction

The Division 13 - Special Construction specification will include:

1) Instruments and Controls
2) Process Control System
3) Pre-engineered Buildings

Instruments and Controls

This section includes design and performance, calibration, and installation requirements for instruments. Instruments to be specified include control valves, pressure transmitters, level transmitters, and flow meters.

Process Control System

This section includes performance and design requirements for the Advanced Wastewater Treatment distributed control system interfacing hardware, remote input/output hardware, and the sequence of operations for the optimization and injection systems.

Pre-engineered Buildings

This section includes pre-engineered, shop fabricated metal buildings that will be designed to be assembled in the factory or on site.

B.9 Division 15 - Mechanical

The Division 15 - Mechanical specifications will include:

1) Pumps
2) Exposed Piping and Valves
3) Injection Water Supply Tank
4) Aeration Tank
5) Aeration Tank Blower and Sparge Air Ring
6) Aeration Tank Agitator

Extraction Pumps

Electric motor driven, submersible turbine pumps. Pump bowls will be standard fitted, multistage type. Motors will be suitable for 460 volt, 3 phase, 60 Hz power. Pumps will have rated flows of 250 and 350 gpm respectively, for wells 1 and 3N.

Injection Pumps

Electric motor driven, horizontal centrifugal, ASME B73.1M. cast iron casing, stainless steel shaft and impeller. Motors will be suitable for 460 volt, 3 phase, 60 Hz power. Pumps will have rated flows of 1,000 gpm each.

Exposed Piping and Valves

1) Pipe: ASTM A53 seamless Grade A, standard weight.

2) Flanges: Class 150, raised face; rubber gaskets.

3) Fittings: Welded.

4) Valves:
   (1) Class 150.
   (2) Check valves: Non-slam type.
   (3) Isolating valves: Manually operated resilient seated butterfly with gear operators for sizes 6 inches and larger.
   (4) Sample, vent and drain valves: manual ball and globe type.

5) Insulation: Cellular foam anti-sweat type, and cellular glass for heat-traced pipe.

6) Insulation jacket: none in valve pits, aluminum outdoors.

Injection Water Supply Tank

Vertical, cylindrical tank, constructed of carbon steel in accordance with API 650. Nominal capacity will be 50,000 gallons.

Aeration Tank

Vertical, cylindrical tank constructed of carbon steel in accordance with API 650. Nominal capacity will be 10,000 gallons.

Aeration Tank Blower and Sparge Air Ring

Electric, motor-driven centrifugal blower in accordance with Air Movers and Controllers Association standards. Motor will be suitable for 460 volt, three phase, 60 Hz power. Blower will be rated at approximately 500 cfm and 10 psig. Sparge air ring assembly with approximately 6-inch inlet to distribute blower air.

Aeration Tank Agitator

Electric, motor-driven mixer to provide agitation for the iron removal tank. Motor will be suitable for 460 volt, three phase, 60 Hz power.

B.10 Division 16 - Electrical

The Division 16 - Electrical specifications will include:

1) Basic Electrical Materials and Methods
2) Grounding and Bonding
3) Underground Ductbank and Manholes
4) Overhead Power Distribution
5) Electric Heating Cables
6) Lighting

Electrical conduit, wire, and general materials, as well as circuit breakers, variable frequency drives, disconnect switches, transformers, and panelboards, will be specified according to national standards as required by DOE Order 6430.1A and the project requirements. Likewise, grounding, 480 V distribution system, and motors will be specified in the respective specifications.

APPENDIX C

SITE PLAN

g04344.m po169@ws412. Fri Sep 20 13:48:54 CDT 1996

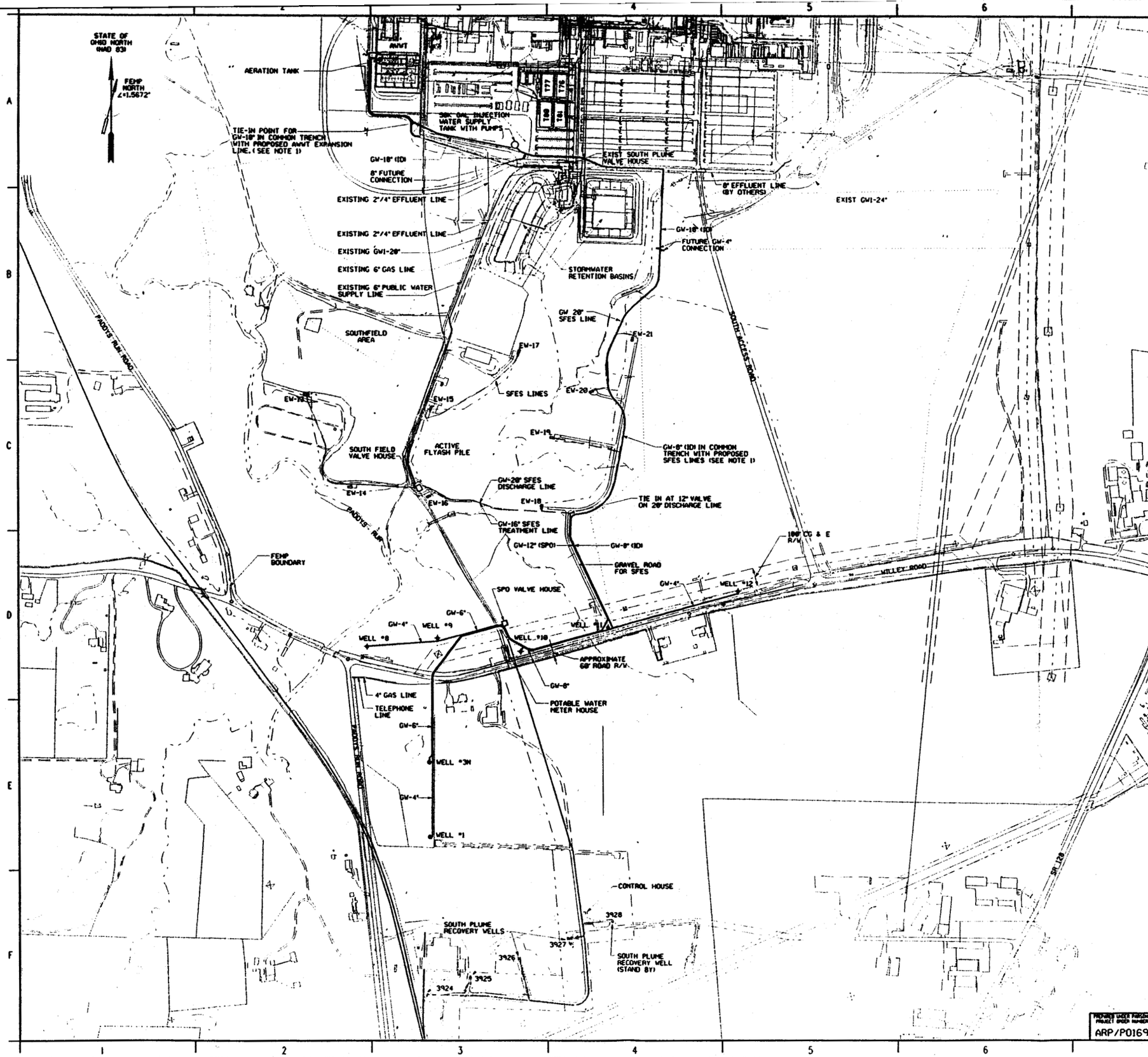

NOTES

1. UTILITIES WILL BE ROUTED IN COMMON TRENCH WITH OTHER PROPOSED UTILITIES (WITH THE SOUTH FIELD EXTRACTION SYSTEM (SFES) AND AWWT EXPANSION I. WORK TO BE PERFORMED WITH OTHER CONSTRUCTION CONTRACT.
2. WORK RELATED TO OPTIMIZATION WELLS WILL BE FERMCO PROJECT NO. SPO-53300, AND WORK RELATED TO INJECTION WELLS WILL BE FERMCO PROJECT NO. ID-53100.
3. GW LINES WILL BE HIGH DENSITY POLYETHYLENE (HDPE).

LEGEND

EXISTING		PROPOSED
	5' CONTOURS	
	INJECTION WELLS	✦
	OPTIMIZATION WELLS	●
EW-18	EXTRACTION WELLS (SFES)	
	INJECTION LINE	GW-6" (ID)
	OPTIMIZATION LINE	GW-6" (SPO)

WELL COORDINATES

WELL	NORTHING	EASTING	DESCRIPTION
1	475126.366	1348337.600	OPTIMIZATION WELL
3N	475549.714	1348334.685	OPTIMIZATION WELL
8	476206.370	1347982.423	INJECTION WELL
9	476255.220	1348384.780	INJECTION WELL
10	476178.173	1348857.173	INJECTION WELL
11	476316.548	1349352.935	INJECTION WELL
12	476526.848	1350096.900	INJECTION WELL

REF DWG NO.	DRAWING TITLE

PRELIMINARY
NOT FOR CONSTRUCTION

REV. NO.	ISSUE OR REVISION PURPOSE - DESCRIPTION	A-E	FERMCO	DATE
B	ISSUED FOR FR & DBD REV 0		N/A	
A	ISSUED FOR 90% TITLE I DESIGN REVIEW		N/A	

INITIALS AND DATE

UNITED STATES DEPARTMENT OF ENERGY
FERNALD ENVIRONMENTAL MANAGEMENT PROJECT

THIS DRAWING PREPARED BY
PARSONS
THE RALPH M. PARSONS CO. - PARSONS MAIN, INC. - ENGINEERING-SCIENCE, INC.
CINCINNATI, OHIO

PROJECT NAME
SOUTH PLUME OPTIMIZATION AND INJECTION DEMONSTRATION

DRAWING TITLE
CIVIL
PRELIMINARY SITE PLAN

DRAWN BY	DATE	LEAD ENGINEER	DATE	CHECKED BY	DATE
R. LINDGREN	04/23/96			K. GERARD	05/02/96

PLANT/BLDG. NO.	FLOOR	SCALE	CLASS
		1"=200'	

SUBMITTED FOR APPROVAL	FERMCO CRU APPROVAL	FERMCO PROJECT NUMBERS
A-E DATE	N/A	SPO-53300 ID-53100

PREPARED UNDER PARSONS PROJECT ORDER NUMBER	DOE PROJECT NO.	TEMP PROJECT NO.	DRAWING INDEX CODE NO.	SHEET NO.	REV. NO.
ARP/P0169		VBS 1.1.1.1.1.2.1 00-90701	SK-G-04344	G0001	B

APPENDIX D

PIPING AND INSTRUMENTATION DIAGRAMS

kn04363.m pdsgen@ws111. Fri Sep 20 11:41:17 CDT 1996

PIPING SYMBOLS

- GATE VALVE
- GLOBE VALVE
- BALL VALVE
- PLUG VALVE
- BUTTERFLY VALVE/DAMPER
- STOP CHECK
- NEEDLE VALVE
- CHECK VALVE
- SLIDING GATE VALVE
- BALL CHECK VALVE
- BACKFLOW PREVENTER
- DIAPHRAGM VALVE
- PINCH VALVE
- 3 WAY VALVE
- 3 WAY BALL VALVE
- 3 WAY PLUG VALVE
- ANGLE GATE VALVE
- ANGLE GLOBE VALVE
- FOOT VALVE
- HUB DRAIN OR FUNNEL
- DIAPHRAGM ACTUATOR
- DIAPHRAGM ACTUATOR W/ POSITIONER
- PISTON ACTUATOR
- SAFETY RELIEF VALVE
- SOLENOID ACTUATOR
- SELF-CONTAINED BACK PRESSURE REGULATING VALVE
- 2-WAY SOLENOID VALVE
- 3-WAY SOLENOID VALVE (INDICATES DEENERGIZED FLOW PATH)
- 4-WAY SOLENOID VALVE
- VALVE WITH OPERATOR (VALVE TYPE UNDEFINED)
- STEAM TRAP
- HOSE QUICK COUPLING
- UNION
- DRAIN LEG
- EXPANSION JOINT
- HANDWHEEL
- EDUCTOR
- STRAINER (Y TYPE)
- STRAINER (SINGLE BASKET)
- STRAINER (DOUBLE BASKET)
- STRAINER (CONE TYPE)
- STRAINER (SUCTION TYPE)
- CONCENTRIC REDUCER
- ECCENTRIC REDUCER
- ORIFICE
- VENTURI TUBE
- SIPHON TUBE
- THERMOWELL
- FLOW DIRECTION
- WELDED CONNECTION
- FLANGED CONNECTION
- FLEXIBLE HOSE
- PIPE CAP
- TIE/IN MARK
- PRIMARY
- SECONDARY
- EXISTING PIPING OR EQUIPMENT
- UNDERGROUND
- PACKAGED SYSTEM
- PIPING MATERIAL BREAK
- PIPING INSULATION BREAK
- AIR AND VACUUM VALVE
- PULSATION DAMPENER
- AIR FILTER
- FILTER LUBRICATOR REGULATOR
- AIR OPERATED DIAPHRAGM PUMP
- HORIZONTAL CENTRIFUGAL PUMP
- VERTICAL CENTRIFUGAL PUMP
- SUMP PUMP
- CHEMICAL METERING PUMP
- AGITATOR (MIXER)
- AIR RELEASE VALVE
- TEMPORARY STRAINER
- SUBMERSIBLE TURBINE PUMP
- MOTORIZED VALVE ACTUATOR
- BLOWER
- MIST ELIMINATOR

ABBREVIATIONS

BTU	BRITISH THERMAL UNIT
CU FT	CUBIC FEET
GPH	GALLONS PER HOUR
GPM	GALLONS PER MINUTE
KW	KILOWATT
LB/HR	POUNDS PER HOUR
SCFM	STD. CUBIC FT/MINUTE
NO	NORMALLY OPEN
NC	NORMALLY CLOSED
FO	FAIL OPEN
FC	FAIL CLOSED
AO	AIR TO OPEN
AC	AIR TO CLOSE
IA	INSTRUMENT AIR
EF	EXHAUST FAN
GV	GRAVITY VENTILATOR
UH	UNIT HEATER
RED	REDUCER
ECC	ECCENTRIC
TBD	TO BE DETERMINED
TF	TOP FLAT
TYP	TYPICAL
MATL	MATERIAL
AG	AGITATOR
BLW	BLOWER
MS	MIST ELIMINATOR
TNK	TANK
MED	MEDIUM
CO	CLEAN OUT
RH	RELATIVE HUMIDITY
CFM	CUBIC FEET/MINUTE
PIV	POST INDICATOR VALVE
PMP	PUMP
AVV	AIR AND VACUUM VALVE
ARV	AIR RELEASE VALVE
SFES	SOUTH FIELD EXTRACTION SYSTEM

INSTRUMENTATION SPECIAL DESIGNATIONS

DESIGNATION	FUNCTION/ABBREVATION
Σ/N OR AVG	AVERAGING
± OR BI	BIAS
|x|,|x|2,|x|1 (TYP)	BOOST,GAIN OR ATTENUATE (INPUT,OUTPUT)
Δ OR DIF	DIFFERENTIAL
÷ OR DIV	DIVIDE
√‾ OR SQ.RT.	EXTRACT SQUARE ROOT
X OR MUL	MULTIPLY
N	RAISE TO POWER
REV	REVERSING
Σ OR SUM	SUMMING
L	LOW
LL	LOW LOW
H	HIGH
HH	HIGH HIGH
HL	HIGH LOW
∫	INTEGRATE (TIME INTEGRAL)
%	PROPORTIONAL
Y	UNDETERMINED COMPUTING RELAY
HOA	HAND-OFF-AUTO
Φ	EXISTING INSTRUMENT TO BE RELOCATED
I/P	CURRENT TO PNEUMATIC TRANSDUCER
RUN	RUNNING
OA	OFF-AUTO
OCA	OPEN-CLOSE-AUTO
I/O	INPUT / OUTPUT
Φ	EXISTING INSTRUMENT
UD	UP/DOWN
EW	EAST/WEST
I/I	CURRENT TO CURRENT

SINGLE LINE AIR DUCT SYMBOLS

- FAN WITH INLET VANES AND BACKDRAFT DAMPER
- BACKDRAFT DAMPER
- MOTORIZED DAMPER
- MANUAL VOLUME DAMPER

PIPING SPECIFICATIONS

FLOWING MEDIUM	MED CODE	MATL CODE
BACK WASH	BW	T
BLOWER AIR	BA	A
CHILLED WATER	CHL CHR	A
CHLORINE	CL	B1
CONCENTRATE	LC	W, T
CONDENSER WATER	CWS, CWR	A
COOLING WATER	WS, WR	A
DRAIN	DR	A, T
THICKENER OVERFLOW	TO	T
FILTRATE EFFLUENT	FT	A
FLOCCULANT	FL	A
FLUSH WATER	FW	T
FORCE MAIN	FM	M
GROUND WATER	GW	A, B4, M
INSTRUMENT AIR	IA	T
MELTER OFF-GAS	OG	T
NITRIC ACID	AN	T1
PENCHED GRD WATER	PGW	B
PHOSPHORIC ACID	PAPH	T1
PLANT AIR	PA	W
POLISHED WATER	PW	A
POTABLE WATER	DW	W, B, B3
PROCESS WATER	TW, TWR1	A, B4
PROCESS WASTEWATER	CE	A
RAW WATER	RW	A
RECYCLE WATER	RC	T, B2
SCRUBBER RECYCLE	RSL	T
SLURRY	SL	T
SODIUM CARBONATE	SC	A
SODIUM HYDROXIDE	NA	T
SODIUM SILICATE	SS	A
STORM WATER	ST	A
SULFURIC ACID	SA	T1
SUMP DISCHARGE	SU	T
VACUUM	V	A
VENTILATION AIR	VE	T, A
WASTE WATER	WW	T

EXAMPLE: CE-2"-A-100-ET
- MEDIUM CODE
- NOMINAL PIPE SIZE
- MATERIAL CODE
- LINE NUMBER
- HEAT TRACING AND INSULATION

A - A53 SEAMLESS STEEL PIPE
B - PVC
B1 - PVDF
B2 - PVDF, 100 PSI
B3 - CPVC
B4 - HDPE
L - FIBERGLASS REINFORCED PLASTIC
M - DUCTILE IRON
T - 304L, STAINLESS STEEL PIPE
T1 - 316L, STAINLESS STEEL PIPE
W - A53,GR. A, GALVANIZED STEEL PIPE
ET - ELECTRIC TRACED AND INSULATED
IC - ANTI-CONDENSATION INSULATION
ST - STEAM TRACED AND INSULATED

INSTRUMENT SYMBOLS

- ELECTRICAL BINARY SIGNAL
- PNEUMATIC BINARY SIGNAL
- ELECTROMAGNETIC OR SONIC SIGNAL (GUIDED)
- ELECTROMAGNETIC OR SONIC SIGNAL (NON-GUIDED)
- IA — INSTRUMENT/PLANT AIR SUPPLY
- ELECTRICAL SIGNAL
- DATA HIGHWAY
- CAPILLARY
- HYDRAULIC SIGNAL LINE
- PNEUMATIC OR VACUUM SIGNAL LINE
- INTERLOCK
- DIAPHRAGM SEAL
- FI — ROTAMETER
- FI — SIGHT GLASS
- LOCAL MOUNTED INSTRUMENT
- FRONT OF PANEL MOUNTED INSTRUMENT
- FRONT OF PANEL MOUNTED INSTRUMENT AUXILLIARY LOCATION
- REAR OF PANEL MOUNTED INSTRUMENT
- REAR OF PANEL MOUNTED INSTRUMENT AUXILLIARY LOCATION
- DIGITAL LOGIC OPERATOR INTERFACE AUXILIARY LOCATION
- DIGITAL LOGIC OPERATOR INTERFACE
- SHARED CONTROL AUXILIARY LOCATION
- SHARED DISPLAY COMPUTER CONTROL AND OPERATOR INTERFACE
- F — AIR VENT FILTER
- ULTRASONIC FLOW METER
- POSITIVE DISPLACEMENT FLOW METER
- A*** — EQUIPMENT NUMBER
- D — VORTEX SHEDDING FLOW METER
- PRESSURE ELEMENT
- R — MAG FLOW METER

FI 102 A
- LETTERS OF IDENTIFICATION
- SPECIAL DESIGNATION
- INSTRUMENT TAG NUMBER

TYPICAL CALL OUT

LETTERS OF INSTRUMENT IDENTIFICATION

LETTER	FIRST LETTER	2ND LETTER	3RD OR 4TH LETTER
	MEASURED OR INITIATING VARIABLE	MODIFIER	READ OUT OR PASSIVE FUNCTION
A	ANALYSIS	ALARM	ALARM
B	BURNER FLAME	----	----
C	CAMERA	CONTROLLER	CLOSED
D	DENSITY	DIFFERENTIAL	----
E	VOLTAGE	ELEMENT	ELEMENT
F	FLOW RATE	RATIO (FRACTION)	----
G	GAGING (DIM)	VIEWING DEVICE	GLASS
H	HAND (MANUAL)	----	HIGH
I	CURRENT (ELECT)	INDICATE	INDICATE
J	POWER	SCAN	----
K	TIME	----	----
L	LEVEL	LIGHT	LOW
M	MOIST OR HUMIDITY	----	----
N	----	----	----
O	OBSERVATION	ORIFICE	OPEN
P	PRESSURE OR VACUUM	----	POINT (TEST)
Q	QUANTITY OR EVENT	TOTALIZER	----
R	RESTRICTIVE	RECORDER	RECORDER
S	SPEED OR FREQUENCY	SAFETY/SWITCH	SWITCH
T	TEMPERATURE	TRANSMITTER	TRANSMITTER
U	USER'S GUIDE	----	MULTIFUNCTION
V	VISCOSITY	----	VENT, VALVE
W	WEIGHT OR FORCE	WELL	----
X	UNCLASSIFIED	----	UNCLASSIFIED
Y	RELAY	RELAY	----
Z	POSITION	----	----

NOTES

REF DWG NO.	DRAWING TITLE

PRELIMINARY
NOT FOR CONSTRUCTION

REV. NO.	ISSUE OR REVISION PURPOSE - DESCRIPTION	A-E	REVWD	DATE
B	ISSUED FOR FR AND DBD, REV. 0		N/A	
A	ISSUED FOR 90% TITLE I REVIEW		N/A	

INITIALS AND DATE

UNITED STATES DEPARTMENT OF ENERGY
FERNALD ENVIRONMENTAL MANAGEMENT PROJECT

THIS DRAWING PREPARED BY
PARSONS
THE RALPH M. PARSONS CO. - PARSONS MAIN, INC. - ENGINEERING-SCIENCE, INC.
CINCINNATI, OHIO

PROJECT NAME
SOUTH PLUME OPTIMIZATION AND INJECTION DEMONSTRATION

DRAWING TITLE
MECHANICAL PROCESS PIPING AND INSTRUMENTATION DIAGRAM SYMBOLS AND LEGEND

DRAWN BY	DATE	LEAD ENGINEER	DATE	CHECKED BY	DATE
JIM LAWSON	5-9-96			K. D. MORRIS	5-20-96

PLANT/BLDG NO. | FLOOR | SCALE | CLASS

SUBMITTED FOR APPROVAL	FERMCO ON APPROVAL	FERMCO PROJECT NO.
	N/A	SPI-53100 SPO-53300

A-E DOE PROJECT NO. | A-H TEMP PROJECT NO. | DATE | DRAWING TREE CODE NO. | SHEET NO. | REV. NO.

PROJECT UNDER PARSONS PROJECT ORDER NUMBER	TEMP PROJECT NO.	DRAWING TREE CODE NO.	SHEET NO.	REV. NO.
ARP/P0169	WBS 1.1.1.1.1.2.1 00-90701	SK-N-04363	N0001	B

skn04364.m pdsgen@ws111. Fri Sep 20 12:01:09 CDT 1996

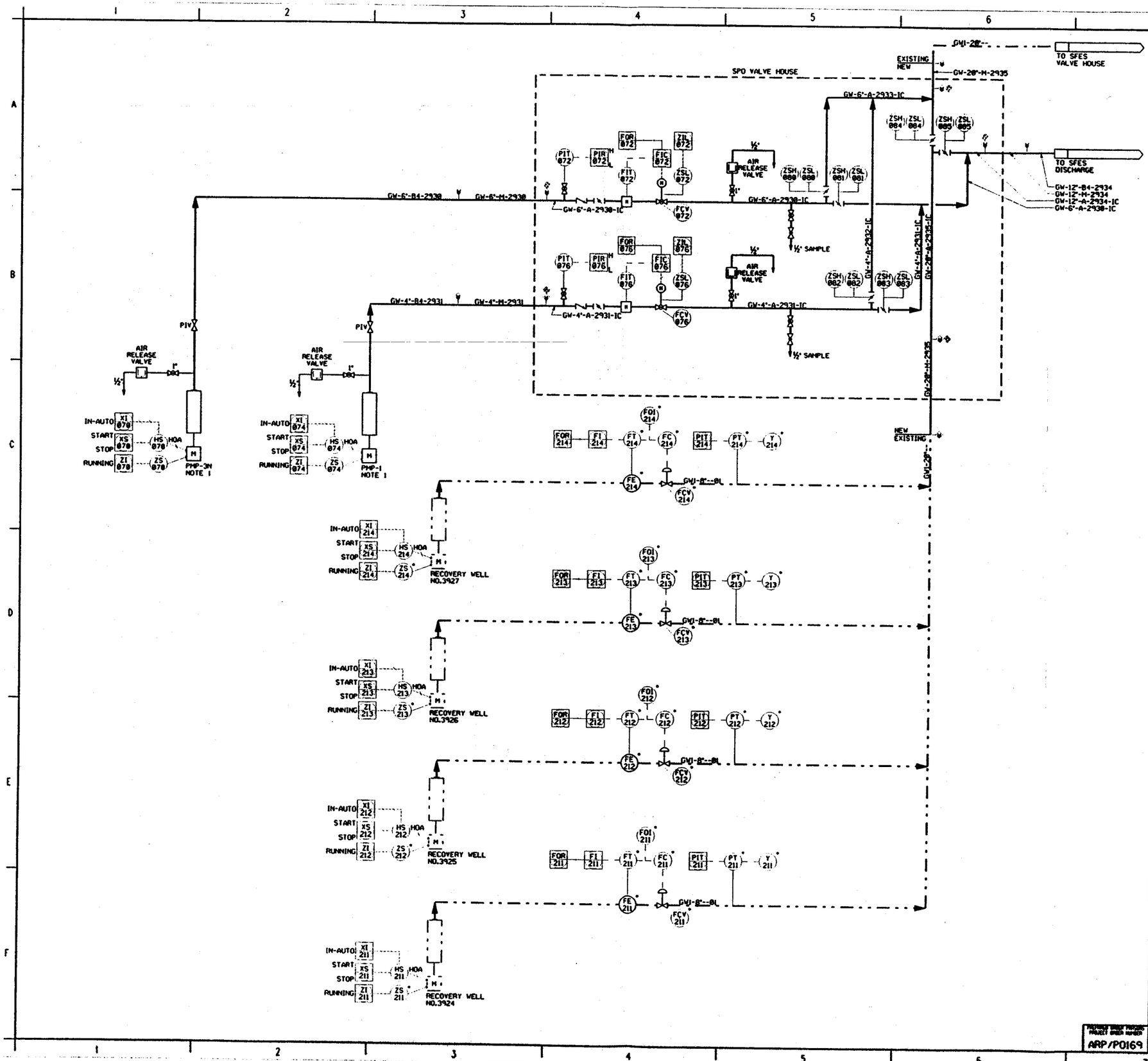

NOTES

1. THE SUFFIX ASSIGNED TO THE PUMPS CORRESPONDS TO THE EXTRACTION WELL NUMBER.

LAST VALVE NUMBER

REF DWG NO.	DRAWING TITLE
SK-N-04363	SYMBOLS AND LEGEND
18A-4445-P-01192	RECOVERY WELL SYSTEM (A. M. KINNEY)

PRELIMINARY
NOT FOR CONSTRUCTION

REV. NO.	ISSUE OR REVISION PURPOSE - DESCRIPTION	A-E	FERMCO	DATE
B	ISSUED FOR FR AND DBD, REV. 0			
A	ISSUED FOR 90% TITLE I REVIEW		N/A	

UNITED STATES
DEPARTMENT OF ENERGY
FERNALD ENVIRONMENTAL MANAGEMENT PROJECT

THIS DRAWING PREPARED BY
PARSONS
THE RALPH M. PARSONS CO. - PARSONS MAIN, INC. - ENGINEERING-SCIENCE, INC.
CINCINNATI, OHIO

PROJECT NAME
SOUTH PLUME OPTIMIZATION
AND INJECTION DEMONSTRATION

DRAWING TITLE
MECHANICAL PROCESS
PIPING AND INSTRUMENTATION DIAGRAM
SOUTH PLUME OPTIMIZATION

DRAWN BY	DATE	LEAD ENGINEER	DATE	CHECKED BY	DATE
JIM LAWSON	5-9-96			K. D. HARRIS	5-28-96

PLANT/BLDG. NO.	FLOOR	SCALE	CLASS

SUBMITTED FOR APPROVAL	FERMCO CNV APPROVAL	FERMCO PROJECT NO.
A-E DATE	N/A DATE	53300

A-E PROJECT NO.	FLOW PROJECT NO.	DRAWING SHEET CODE NO.	SHEET NO.	REV. NO.
	MBS 1.1.1.1.2.1 00-90701	SK-N-04364	N0002	B

PROJECT DWG PARSONS PROJECT SHEET NUMBER: ARP/P0169

skn04365.m pdsgen@ws111. Fri Sep 20 13:35:06 CDT 1996

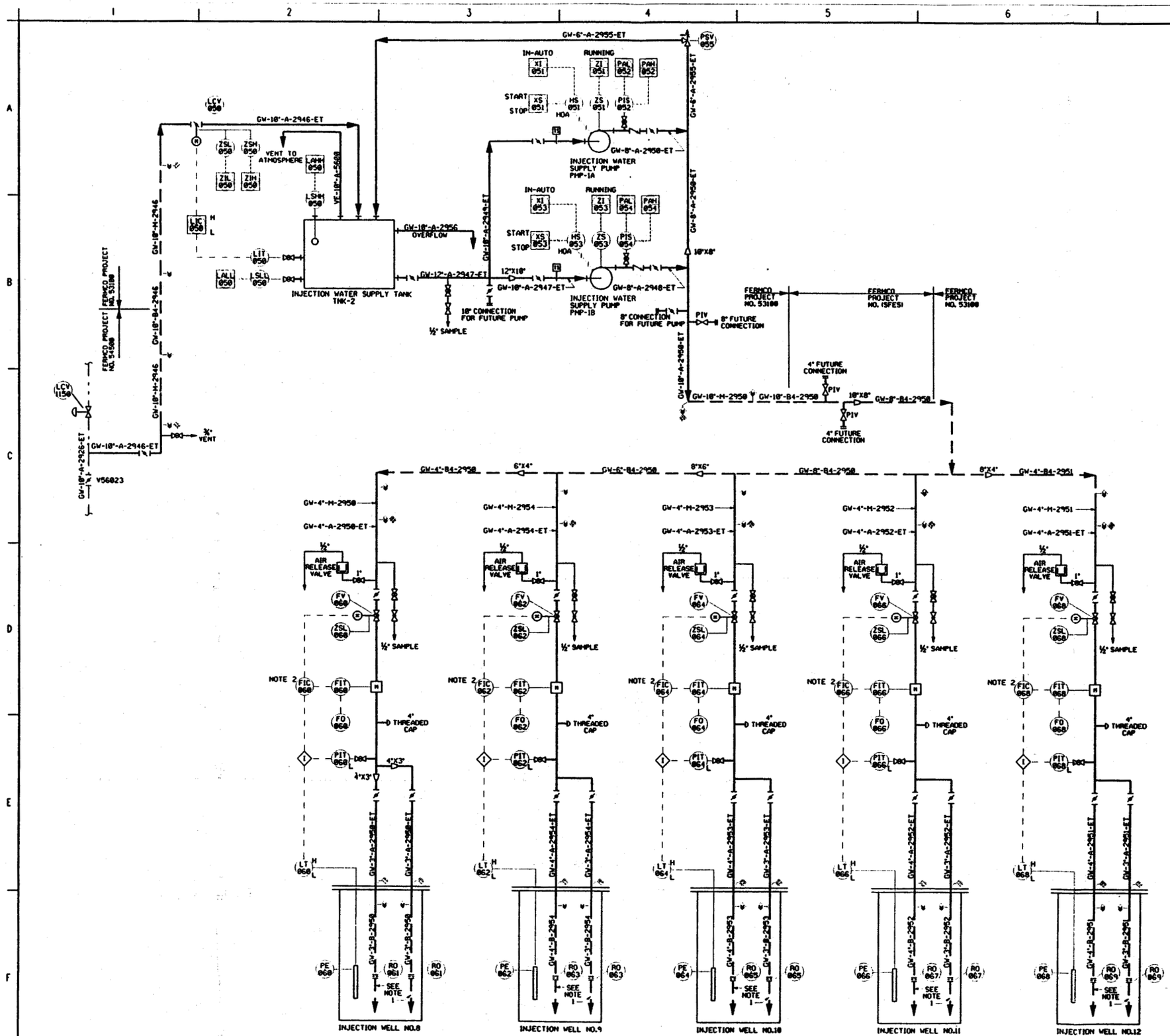

NOTE 420

1. EACH WELL INJECTION TUBE SHALL HAVE PERFORATED FLOW DISTRIBUTION OUTLETS.
2. CONTROLLER IMITATES VALVE CLOSED ON PRESSURE BELOW SET POINT OR LEVEL ABOVE HIGH LEVEL BELOW LOW SET POINTS.

REF DWG NO.	DRAWING TITLE
SK-N-04363	SYMBOLS AND LEGEND

PRELIMINARY
NOT FOR CONSTRUCTION

REV. NO.	ISSUE OR REVISION PURPOSE - DESCRIPTION	A-E	FERMCO	DATE
B	ISSUED FOR FR AND DBD, REV. B			
A	ISSUED FOR 90% TITLE I REVIEW		N/A	

APPROVALS AND DATE

UNITED STATES
DEPARTMENT OF ENERGY
FERNALD ENVIRONMENTAL MANAGEMENT PROJECT

THIS DRAWING PREPARED BY
PARSONS
THE RALPH M. PARSONS CO. - PARSONS MAIN, INC. - ENGINEERING-SCIENCE, INC.
CINCINNATI, OHIO

PROJECT NAME
SOUTH PLUME OPTIMIZATION AND INJECTION DEMONSTRATION

DRAWING TITLE
MECHANICAL PROCESS
PIPING AND INSTRUMENTATION DIAGRAM
SOUTH PLUME INJECTION

DRAWN BY	DATE	TEAM DRAFTER	DATE	CHECKED BY	DATE
JIM LAWSON	5-9-96			K. D. MORRIS	5-20-96

PLANT/BLDG. NO. | PLOAP | SCALE | CLASS

SUBMITTED FOR APPROVAL | FERMCO ON APPROVAL: N/A | FERMCO PROJECT NO.: 53100

A-E DWG PROJECT NO. | DATE | TEMP PROJECT NO.: WBS 1.1.1.1.2.1 00-90701 | DATE | DRAWING SHEET CODE NO.: SK-N-04365 | SHEET NO.: N0003 | REV. NO.: B

PROGRAM GROUP PROJECT PROJECT GROUP NUMBER: ARP/P0169

000083

skn04366.m pdsgen@ws111. Fri Sep 20 13:59:12 CDT 1996

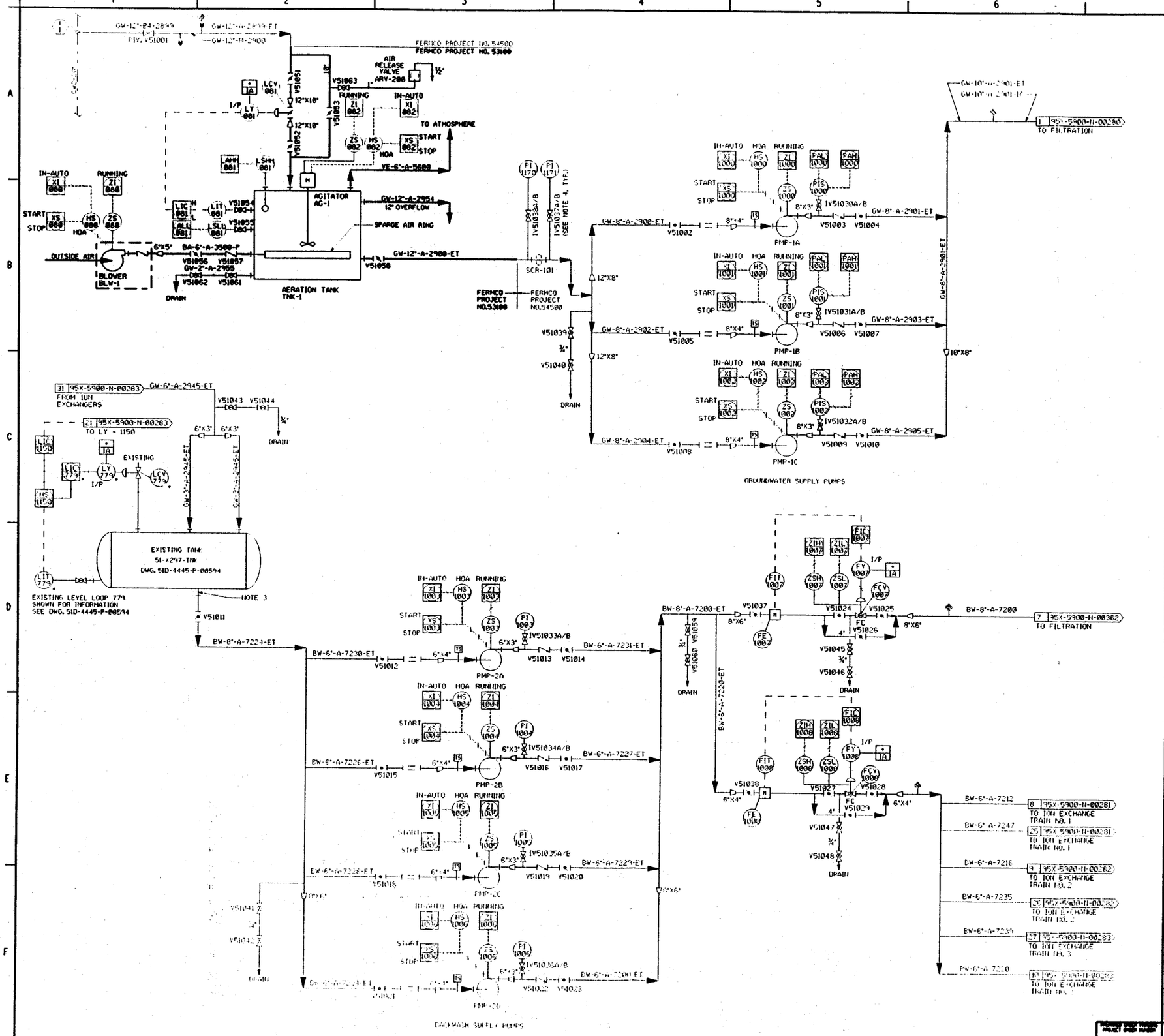

NOTES

REF DWG NO.	DRAWING TITLE
SK-N-04363	SYMBOLS AND LEGEND

PRELIMINARY
NOT FOR CONSTRUCTION

REV. NO.	ISSUE OR REVISION PURPOSE - DESCRIPTION	A-E	FERMCO	DATE
B	ISSUED FOR FR AND DBD, REV. 0		N/A	
A	ISSUED FOR 90% TITLE I REVIEW		N/A	

INITIALS AND DATE

UNITED STATES
DEPARTMENT OF ENERGY
FERNALD ENVIRONMENTAL MANAGEMENT PROJECT

THIS DRAWING PREPARED BY
PARSONS
THE RALPH M. PARSONS CO. - PARSONS MAIN, INC. - ENGINEERING-SCIENCE, INC.
CINCINNATI, OHIO

PROJECT TITLE
SOUTH PLUME OPTIMIZATION
AND INJECTION DEMONSTRATION

DRAWING TITLE
MECHANICAL PROCESS
PIPING AND INSTRUMENTATION DIAGRAM
GROUNDWATER SUPPLY

DRAWN BY	DATE	LEAD ENGINEER	DATE	CHECKED BY	DATE
JIM LAWSON	05/09/96			K. D. HORRIS	05/28/96

PLANT/BLDG. NO. | FLOOR | SCALE N/A

SUBMITTED FOR APPROVAL | FERMCO ORI APPROVAL N/A | FERMCO PROJECT NO. 53100

PARSONS WORK PERFORMED PROJECT ORDER NUMBER ARP/P0169

BIC PROJECT NO. | FERP PROJECT NO. WBS 1.1.1.1.2.1 00-90701 | DRAWING SHEET CODE NO. SK-N-04366 | SHEET NO. N0004 | REV. NO. B