444 4-703.2

VITRIFICATION PILOT PLANT PUBLIC WORKSHOP HELD AT THE PLANTATION ON OCTOBER 15, 1996 - AGENDA AND HANDOUTS

10/15/96

DOE-FN PUBLIC
35
AGENDA

VITRIFICATION PILOT PLANT
PUBLIC WORKSHOP

Fernald Environmental Management Project

Plantation -- Oak Room

October 15, 1996
7:00 - 9:00 p.m.

AGENDA

Welcome and Announcements . . . . . Gary Stegner

Meeting Statement/Introductions . . . . . Nina Akgunduz

Introduction to Vitrification Pilot Plant . . . . . Don Paine

- Video of the Vitrification Pilot Plant
- Path Forward -- Vitrification Pilot Plant
- Path Forward -- Silos Project

Q&A . . . . . Gary Stegner

Operable Unit 4

Silos Project

July 1996

Introduction

Operable Unit 4 is one of five well-defined areas undergoing remediation at the U.S. Department of Energy's (DOE) Fernald Environmental Management Project. The operable units were defined, based on their locations or the potential for similar technologies.

Located at the western periphery of the Fernald site, Operable Unit 4 includes Silos 1 and 2 (K-65 Silos), Silo 3 (metal oxide silo), unused Silo 4, and ancillary structures. Operable Unit 4 remediation will address each of these structures, as well as any contaminated soils within the geographic boundary, and any contaminated perched water encountered during Operable Unit 4 remedial activities.

For each operable unit, the U.S. Environmental Protection Agency (EPA) issues a record of decision (ROD). The selected remedial action for an operable unit, as well as the basis for the selection, are formally presented in the ROD.

Background

On Dec. 7, 1994, U.S. EPA signed the Record of Decision for Remedial Action at Operable Unit 4, in which the selected remedial action and the basis for selecting that remedial action, are presented.

Silos 1 and 2, commonly called the "K-65 Silos," contain radium-bearing, low-level radioactive wastes dating back to the 1950s. In 1964, the two silos were reinforced with an earthen berm, which was upgraded in 1983.

Other improvements include a 30-foot cap on top of the silo domes, installed for added protection, and a polyurethane foam coating applied over the domes for weather protection. A silo headspace radon treatment system was also constructed, and radon monitors were installed around the Fernald site boundary and in the immediate vicinity of Silos 1 and 2.

Silo 3 contains dried uranium-bearing wastes. Silo 4 is empty.

Operable Unit 4 Selected Remedy

A restructuring of all Fernald project and support organizations has been completed to strategically align the existing project organizations to permit more efficient performance of remedial design and remedial action activities. The selected remedy for Operable Unit 4 will be performed by the following project organizations.

Silos Project

-- Removal of the contents of Silos 1, 2 and 3 (K-65 residues and cold metal oxides) and the decant sump tank sludge.

-- Vitrification (glassification) to stabilize the residues and sludges removed from the silos and decant sump tank.

-- Shipment of the vitrified contents of Silos 1, 2, and 3, and the decant sump tank for disposal at the Nevada Test Site (NTS).

Facilities D&D Project

-- Demolition of Silos 1, 2, 3 and 4, and decontamination -- to the extent practicable.

-- Of concrete rubble, piping and other construction debris generated.

-- Demolition of the vitrification treatment unit and associated facilities after use and decontamination or recycling of debris prior to disposition.

Soil Remediation Project

-- Segregation of non-contaminated soils.

-- Removal of the earthen berms and excavation of contaminated soils within the Operable Unit 4 boundary to achieve proposed remediation levels. Placement of clean backfill following excavation.

-- On-property interim storage of excavated contaminated soils and remaining contaminated debris in a manner consistent with the approved *Work Plan for Improved Storage of Soil and Debris* (Removal Action 17).

-- Pumping and treatment of any contaminated perched water encountered during remedial activities.

Remedial Design, Remedial Action

The overall objective of Operable Unit 4 remedial actions is to safely remove a known source of contamination, which will reduce the potential for release of hazardous substances, including radionuclides, to the environment, thereby alleviating a potential risk to human health. Substantial risk reduction will be achieved by removing the sources of contamination, treating the material for which exposures result in the highest risk, shipping the treated residues off site for disposal, and managing remaining contaminated soils and debris consistent with a sitewide strategy.

Operable Unit 4 remedial actions entail removing the materials from Silos 1, 2, and 3 and treating them in a vitrification facility to be constructed at the Fernald site. Sludge from the decant sump tank, which collects liquids from in and around the silos, will also be removed and treated in the vitrification facility. Following treatment, the vitrified residues will be containerized and transported and disposed at NTS. The Operable Unit 4 scope includes successful completion of these actions.

After the residues are removed from the silos, the concrete structures, radon treatment system and other structures within Operable Unit 4 will be demolished. After treatment, the vitrification facility will be disassembled.

Vitrification (glassification) will reduce the mobility of hazardous constituents and will reduce the volume of materials requiring disposal.

Standard decontamination technologies will be applied, to the extent practical, to minimize the volume of waste requiring disposal. Opportunities for recycling materials will be explored.

Contaminated soils within Operable Unit 4 will be excavated; it is anticipated that a minimum depth of 6 inches will be removed from the Operable Unit 4 area. Clean fill will be placed in excavated areas, which will then be seeded. Contaminated Operable Unit 4 soil and debris will be placed in an on-site storage facility. As required, the storage facility will be maintained and monitored.

Operable Unit 4 contaminated soil and debris will be disposed consistent with the selected remedial actions for Operable Units 3 and 5 and will be accomplished via the Soils Remediation Project.

On Oct. 6, 1995, DOE submitted the *Work Plan for Operable Unit 4 Remedial Action -- Phase I* to U.S. EPA. On Nov. 20, 1995, DOE received conditional approval, with comments from U.S. EPA. This document identifies the implementation strategy and schedule for completing all Operable Unit 4 remedial activities.

On Jan. 9, 1996, U.S. EPA approved the *Work Plan for Operable Unit 4 Remedial Action -- Phase I.* Phase I of the Operable Unit 4 remedial action work plan focuses on implementation of the initial remedial action in support of the construction of the Fernald residues vitrification plant: site preparation/underground utilities; silo superstructure construction; new radon treatment system construction (Silos 1 and 2).

Phase II of the remedial action work plan will be submitted following integration of test data from the pilot-scale vitrification plant.

Construction of Fernald's pilot-scale vitrification plant began July 17, 1994, and was completed in May 1996. Pilot-scale Phase I testing operations began in June 1996. Operation of this facility supports development of final vitrification processes and design of the full-scale vitrification facility.

Several of the Fernald Residues Vitrification Plant remedial design packages have already been submitted to the U.S. EPA and Ohio EPA. These include the pre-final site preparation/underground utilities design, on Aug. 31, 1995. On May 1, 1996, the silo superstructures design package was submitted to U.S. EPA and Ohio EPA.

The site preparation/underground utilities design has since been approved by U.S. EPA, and a construction subcontract was awarded Feb. 27, 1996. Construction is currently in progress.

Operable Unit 4 Vitrification Pilot Plant Treatability Study

A two-phase treatability study will be conducted to demonstrate integration of equipment and operation of the vitrification pilot plant, including the melter off-gas and radon absorption systems. Other treatability study objectives include: verifying formulations developed from the previous bench-scale studies and glass-development program, producing a satisfactory glass product during full-scale operation, and ensuring compliance with acceptance criteria required for disposal at NTS.

Phase I operations will verify the adequacy of the equipment and process. Bentonite and nonradioactive surrogate materials will be utilized in the vitrification facility to perform integrated system operability testing prior to operating with actual silo residues. The surrogate materials are composed of chemicals, including silica, borax and alumina, to closely duplicate the actual silo materials.

Phase I testing with nonradioactive, surrogate materials began June 19, 1996, and will take approximately eight months to complete. Production of approximately 90 metric tons of glass is expected to be required to adequately demonstrate vitrification.

During Phase II, radioactive materials from Silos 2 and 3 will be utilized. Also radon control for the Silos 1 or 2 headspace and off-gas treatment for the vitrification facility will be demonstrated. Silo 2 materials will be removed by a manually operated slurry pumping device suspended from a mobile crane. The device will be deployed through an existing manway. A glovebag will maintain a seal and prevent radon escape. Silo 3 materials will be removed pneumatically.

For More Information

Contact the Public Environmental Information Center (PEIC), 10845 Hamilton-Cleves Highway, Harrison, Ohio, 45030 (phone: 513-738-0164).

For specific questions regarding Operable Unit 4, contact: Acting Team Leader Nina Akgunduz, DOE Fernald Area Office, 513-648-3110.

VITRIFICATION PILOT PLANT PUBLIC WORKSHOP

October 15, 1996

Evaluation Survey

Thank you for attending the workshop to discuss the Vitrification Pilot Plant (VITPP). Please take a few minutes to answer the questions below:

1. Did you receive a notification postcard of this workshop? If not, you are probably not on our key stakeholder mailing list. If you want to be added to the list, please ask at the registration table for a Mailing List Request form.

2. Did you like the video of the VITPP? Did it help you understand the purpose of the pilot plant?

3. Was the presentation on the VITPP adequate and understandable?

4. After tonight's meeting, do you feel you're better educated on the VITPP and vitrification in general?

   Do we need to do more informing/educating?

5. How satisfied were you with responses to questions asked this evening?

6. Do you have any other constructive comment/criticism about tonight's meeting?

Optional:

Name_____ Phone_____

SILO 3 REMEDY CHANGE BACKGROUND INFORMATION

VITRIFICATION PILOT PLANT DELAYS

November 1995, problems with the vitirification pilot plant caused DOE to announce a 17 month delay in evaluation of vitirification technology, and resulted in investigation of ways to improve performance.

VALUE ENGINEERING STUDY

January 1996, an independent value engineering report was released which identified four recommendations for technical simplification, cost savings, and overall schedule improvements:

1. Upgrade the pilot plant to allow for full-scale operation and build a second melter rather than the single large melter originally planned. $57 million potential savings.
2. A. Use solidification/stabilization for silo 3. $68 million potential savings.
   B. Use solidification/stabilization for all silos. $96 million potential savings.
3. Use rail and truck rather than trucks alone. $3.9 million potential savings.
4. Give further study to the following:
   - Exploit potential of vacuum extraction and stabilization technologies.
   - Robot success has been limited, use should be carefully evaluated.
   - Use of a cage around slurry intake may avoid plugging.
   - Meet with Hanford personnel to learn from their experience.
   - Continuously vapor strip material to reduce in-situ radon levels.
   - Remove silo 3 and bentonite caps from consideration for vitrification.
   - Use off gas system data from Western Environmental Technology Office.
   - Separate high activity wastes to remove "hot" wastes from bulk material.
   - Examine the optimum size of the operations and support staff.
   - Privatize the project's feature components.

SILO THREE ALTERNATIVE PROPOSAL

As a result of the value engineering study, a DOE/Fluor Daniel-Fernald team was assembled to evaluate options for silo 3. The result of this effort was a proposal to change the selected remedy on silo 3 from vitirification to solidification. A report was released in July, 1996. Comments have been received by EPA and OEPA and the public comment period ends October 15, 1996.

RATIONALE

The cold metal oxides in silo 3 are fundamentally different than the K-65 materials in silos 1 and 2. Most significant is that the radon levels are much less extreme. The material is also very much like other materials on site which will be solidified prior to shipment to NTS. Overall, DOE believes that solidification can take place faster than vitrification, at lower cost, and with no increased risk.

IMPACTS ON THE RECORD OF DECISION

The OU4 ROD was approved on December 7, 1994 for vitrification and disposal at NTS for the residues contained in all three silos. Changing this decision will require either an Explanation of Significant Difference (ESD) or a ROD Amendment. An ESD is used where the differences in remedy are significant but do not fundamentally change the scope, performance, or cost of the original remedy. A ROD Amendment is required where the differences do fundamentally alter the basic features of the selected remedy with regard to scope, performance, or cost.

Stabilization of Silo 3 will meet the original remedial objectives by reducing dispersibility, mobility, and toxicity of the residues. Therefore, an ESD is sufficient.

Stabilization of Silos 1 and 2 would not meet the original remedial objectives because radon emanation would not be significantly reduced. Therefore, a ROD Amendment would be required.

PROPOSED SILO 3 STABILIZATION PROCESS

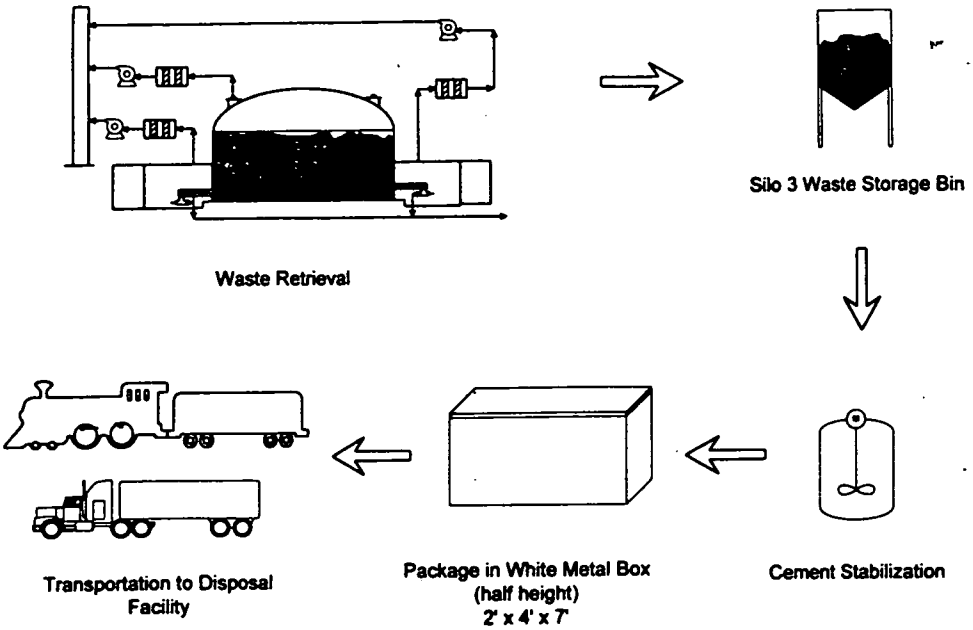

Silo 3 Remediation Flow Diagram

- There are many commercially experienced vendors that have expressed interest in submitting proposals for the treatment of Silo 3 residues utilizing various processes and additives.
- A leading candidate for a treatment process is cement stabilization using a mixture of portland cement, blast furnace slag, Silo 3 residues, and water.

<u>Current Concept as Described in the Silo 3 Evaluation Report</u>

- Silo 3 residues would be retrieved, pneumatically transferred to a storage bin at the treatment facility adjacent to the additive (portland cement, blast furnace slag) storage bins.
- The materials would be mixed at a predetermined ratio to maximize waste loading and produce a final waste product which meets specified waste acceptance criteria.
- Material handling and stabilization equipment would be constructed in a closed system to provide primary containment.
- Stabilization activities would be performed in a new temporary metal-sided building adjacent to Silo 3 or in an existing facility to provide secondary containment to potential fugitive emissions.
- Process wastewater would be recycled for use in the stabilization process to promote waste minimization.
- The final waste form would be a monolithic waste cast into a white metal box for shipment and disposal at the Nevada Test Site.
- Other waste forms may be proposed based upon the responsive vendor's process and disposal location (for example, a granular or pelletized waste form would be more desirable for disposal at the Envirocare facility).
- Prior to award of the treatment contract option to the vendor, the vendor will be required to demonstrate that the proposed stabilization/solidification process meets specified waste acceptance criteria through the performance of a rigorous proof-of-process test.
- As containers are filled, sealed and surveyed, they would be transferred to a staging area awaiting analytical results to determine the waste meets waste acceptance criteria. Material that does not meet the disposal criteria will be reprocessed by the vendor at his own expense.

PROPOSED SCOPE OF VENDOR REQUEST FOR PROPOSAL FOR SILO 3 RESIDUES

The following options would be provided to the vendor in the RFP

- Treatment: Onsite or Off-site Treatment
  (Note: off-site treatment requires pre-treatment onsite before transport)
- Transportation: Truck or Rail
- Disposal Facility: Nevada Test Site or a Representative Permitted Commercial Disposal Facility

The RFP will allow vendors to propose their own solidification/stabilization method to meet the waste acceptance criteria (WAC) of either disposal facility. Performance criteria for conducting each activity will be provided. The process proposed by the vendor must be proven with operating experience by the vendor. No developmental solidification/stabilization methods will be accepted.

The contract would be awarded in 5 phases with the vendor responsible for the following:

1. Documentation and Proof-of-Process Testing
   - Testing the process on actual Silo 3 material
   - Developing the procedures and work plans to conduct the project

2. Design and Equipment Specifications

3. Mobilization, Construction, and Operational Readiness Review
   - Assembling the facility and equipment
   - Testing the equipment prior to operations
   - Undergoing independent review prior to start-up

4. Treatment Operations
   - Removing material from Silo 3
   - Treatment of the material with regular process control testing
   - Packaging for shipment
   - Transportation to the disposal facility
   - Ensuring the treated waste meets the disposal facility WAC. Waste not meeting the WAC will be reprocessed at the vendor's expense.

5. Demobilization
   - Decontamination of the facility and equipment
   - Removing equipment from the facility
   - Off-site disposition of equipment

   Note: If a new facility is constructed, the used, empty facility will remain in place to support the remediation of OU4.

A firm fixed price subcontract would be awarded to the selected vendor. Fluor Daniel Fernald will provide general labor support and will maintain responsibility for health and safety oversight, radiological control, and emergency preparedness.

The following criteria would be used to select a vendor and award the contract

- Safety Record\Program
- Waste Retrieval Concept
- Treatment, transportation and disposal methods proposed by the vendor
- Prior experience in successfully implementing the process proposed
- Contractor's understanding of the technical requirements of the project
- Cost
- Schedule

TREATMENT TECHNOLOGY COMPARISON FOR SILO 3 RESIDUES

444

	Vitrification	Stabilization
Modification of the Record of Decision	No	Yes
Technology Implementability	Developmental & Complex	Proven & Less Complex
Feed Matrix	Heterogeneous	Homogeneous
Additional Facilities and Equipment	Not Required	Required
Treatment of Secondary Waste Streams	Yes	No
Initiate Remediation	2004	2000
Complete Remediation	2007	2001
Hazardous Constituents		
Radon-222 (Untreated 71 $pCi/m^2/sec$) (Regulatory Limit 20 $pCi/m^2/sec$)[a]	0.013 - 0.03 $pCi/m^2/sec$	13 - 17 $pCi/m^2/sec$
Arsenic (Untreated 1 - 45 mg/L) (Regulatory Limit 5 mg/L)[b]	< 1.0 mg/L	< 1.0 mg/L
Cadmium (Untreated 1 - 6 mg/L) (Regulatory Limit 1 mg/L)[b]	< 1.0 mg/L	< 1.0 mg/L
Chromium (Untreated 1 - 12 mg/L) (Regulatory Limit 5 mg/L)[b]	< 1.0 mg/L	< 1.0 mg/L
Selenium (Untreated 1 - 12 mg/L) (Regulatory Limit 1 mg/L)[b]	< 1.0 mg/L	< 1.0 mg/L
Volume of Treated Waste	2,273 yd^3	6,088 yd^3
Total Disposal Volume (including disposal container)	7,000 yd^3	9,000 yd^3
# Containers	1,437	2,160
# Shipments[c]	720	540
Lifetime Cancer Risk - Routine Transport (maximally exposed individual)[d]	3×10^{-10}	8×10^{-10}
Total Estimated Accidents[e]		
Occupational Fatalities	0.0027	0.002
Occupational Injuries	0.053	0.04
Public Fatalities	0.017	0.013
Public Injuries	0.16	0.12
Total Estimated Costs (millions)	$24.8[f]	$19.5

a Regulatory Limit for Radon-222 under 40 CFR § 61 Subpart Q of the National Emission Standards for Hazardous Air Pollutants for treated waste during interim storage and final disposal.

b Regulatory Limit for Arsenic, Cadmium, Chromium, and Selenium under 40 CFR § 261.24 of the Resource Conservation and Recovery Act.

c Though vitrifying Silo 3 residues would result in the need for fewer containers, more shipments would be required due to the weight of the container used for the vitrified residues from shielding needed to maintain radiation levels associated with K-65 material within DOT shipping requirements for radioactive material.

d Risk numbers for maximally exposed individual represent the increased probability of an individual developing a cancer over a lifetime due to exposure to the transported material.

e Accident rates estimated using current information from insurance industry for vehicular accidents based on total mileage traveled for the entire campaign.

f This cost represents the incremental cost of vitrifying the Silo 3 residues in addition to the Silos 1 and 2 residues by the Fernald Residues Vitrification Plant.

DOE EXPERIENCES WITH STABILIZATION/SOLIDIFICATION

SITE	WASTE STREAM	TREATMENT METHOD	COMMENTS & ISSUES
Fernald - Plant 6	2,500 drums of metals uranium/thorium mixed waste	Cement grout into drum and white metal boxes	Successful treatment due to: strict quality control of operation, good process control program; excellent quality assurance program, experienced subcontractor, disposal facility identified up front so waste was treated to known acceptance criteria, good treatability study data, clear work scope and specifications, good configuration management.
Fernald - Thorium Nitrate	7,150 gallons liquid thorium nitrate	Neutralized and solidified with cement grout into drum	Successful treatment due to: strict quality control of operation, good process control program; excellent quality assurance program, experienced subcontractor, disposal facility identified up front so waste was treated to known acceptance criteria, good treatability study data, clear work scope and specifications, good configuration management, proper chemistry development.
West Valley	18,000 drums of high level waste	Pretreatment separated high level waste from low level waste	Proper waste segregation/preprocessing produced 2 waste streams optimized for each treatment technology. 1,500 drums high level waste being successfully vitrified. 19,877 drums low-level waste successfully cement stabilized.
Rocky Flats Pondcrete	Water, sediment, low-level mixed waste	Cement grout 1:5 waste to cement ratio placed in cardboard box	Improper curing, excess water, unsuitable storage containers. Production rate increased and cement usage decreased indicating quality control problems. Utilized mixers which rely on aggregate to aid in mixing process which is too slow for grout production.
DOE-Oak Ridge K-25 Plant	Mixed waste pond sludge (nickel, pH > 12.5, uranium)	Cement grout placed into drum	Problems with 46,000 out of 78,000 drums. Drum corrosion and leakage, too high pH level, improperly solidified material, poor recipe formulas, mix design development failed to adequately address phase separation, no consideration for final disposal waste acceptance criteria

Schedule Comparison with Silo 3 Residues Project Schedule

Original Silos Project Schedule

	Start	End
Design Vitrification Plant	Feb 96	July 97
Construction	May 97	July 98
Startup	July 98	Dec 98
Operations	Dec 98	Dec 01

Proposed Silo 3 Stabilization Schedule

	Start	End
RFP	Oct 96	Feb 97
Procurement	Mar 97	Sep 97
Pre-Design	Sep 97	Apr 98
Design	Apr 98	Jan 99
Procurement/ Construction	Jan 99	Jan 00
Start-up/ORR	Jan 00	Mar 00
Operations	Apr 00	Feb 01

Current Silos Project Schedule

	Start	End
Pilot Plant Testing	6/96	7/00
Design	9/97	4/02
Procurement	2/00	9/02
Construction	11/97	7/04
Start-up/ORR	10/03	12/04
Operations	12/04	3/07

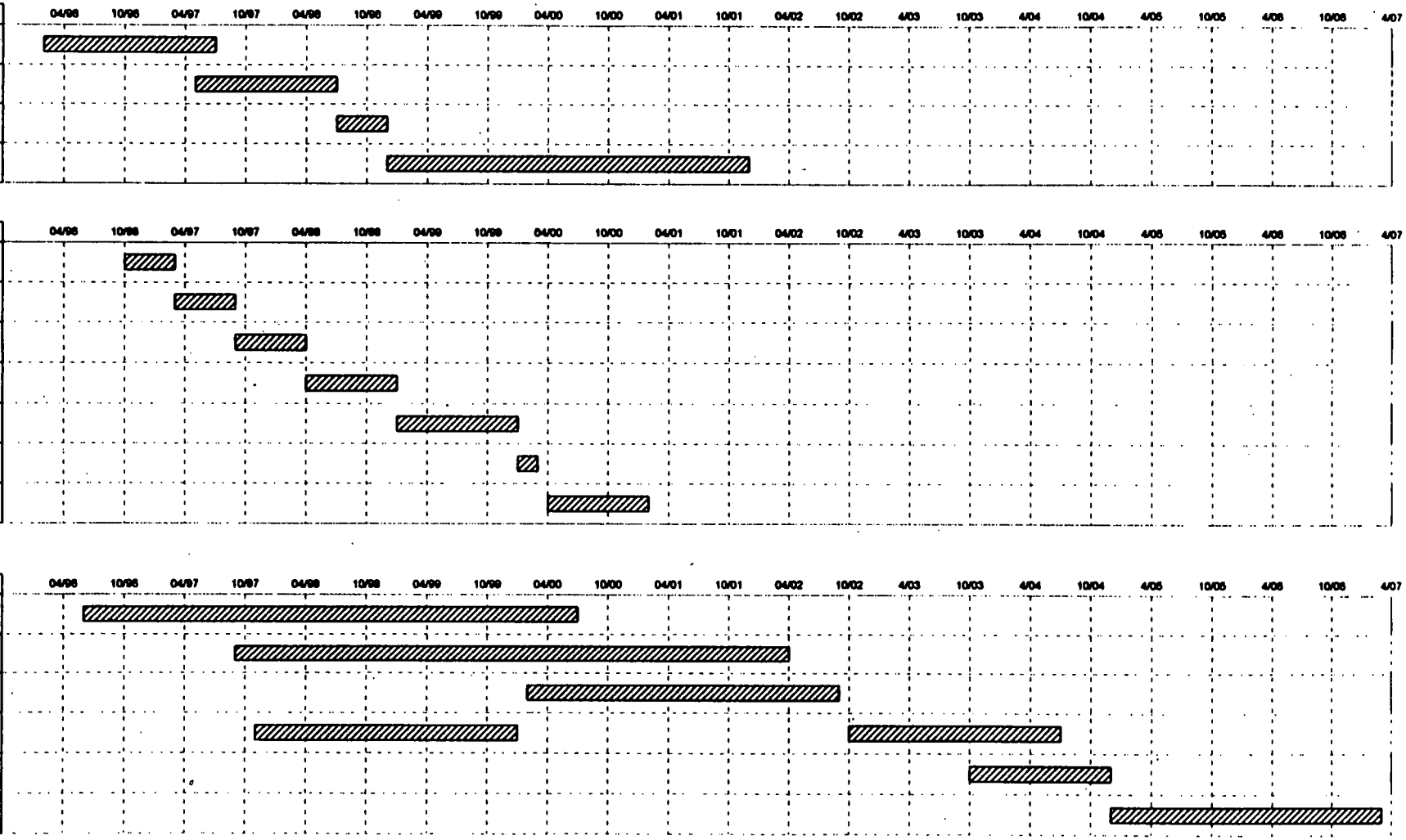

000012

444

VITRIFICATION PILOT PLANT SYSTEM SUMMARY

	SILOS 1 AND 2 WASTE RETRIEVAL	SLURRY FEED SYSTEM	MELTER	GEM MACHINE	OFF-GAS	FACILITY
Current Technical Concept	•Hydraulic Removal, •Pump to Thickener Tank	•Feed Preparation Tanks •Parallel Lines •Recycle Lines	•3 Chamber Melter •Resistance Heating	•Conveyor, Single Stream Discharge	•Negative Pressure •Single Stack Exhaust •HEPA Filtered	Outside Support Systems
Status of System	•Hydraulic Removal not yet tested •Thickener Tank to be tested in VITPP Phase I, Campaign 4	•Operable •High Maintenance •Unpredictable	•Works Well with Minor Issues	•Works Well with Minor Issues	•Limited Operations of Primary System •Emergency Off-gas Systems are Operational	Operable
What Has Worked Well	NA	•Data Acquisition System •Recycle Lines	•Melter Controls •Glass Formulation	•Conveyor Control	•Emergency Off-gas System	•Data Acquisition System and Control system
What Has Not Worked Well*	NA	•Melter Feed •Pipe Routing •Tank Agitation •Valve Failures •Pump Failures	•Cooling Water •Bottom Drain •Side Feed Inoperable •Discharge Chamber Plugging	•Air Cooling •Lube Spray	•Desiccant System •Exhaust Design	•Inclement Weather Effects System Performance
Evaluation	•Concerns of System Performance in the Presence of Bentonite	•Total Redesign	•Eliminate 3-Chamber Melter Design and Bottom Drains •Redesign for In Leakage •Add Discharge Heater	•Redesign Gem Cooling and Lube Spray •Design Multiple Streams	•Add Chiller System •Increase blower Size •Modify Ductwork sizing and configuration	•Enclose Entire Facility Under a Roofed Building
Path Forward	•Complete Campaign 4 •Test Waste Retrieval Concept	•Test New Tank Agitator at Vendor •Upgrade Slurry Feed System	•Perform "Hot" Testing at VSL •Consider Alternate Melter Design	•Evaluate Gems vs. Monolith Waste Form	•Upgrade Off-gas System	•Address Lessons learned in redesign of facility

NA - Not Applicable

* - Detailed summary of Vitrification Pilot Plant system technical issues is on reverse side of this table.

000013

444

September 27, 1996

SUMMARY OF VITRIFICATION PILOT PLANT SYSTEM TECHNICAL ISSUES

Slurry Feed System

- Several melter feed pump seal failures due to abrasive solids in the feed stream.
- The excessive number of 90° - elbows, indirect routing and "dead legs" led to pipe plugging.
- The single tank agitators fail to keep the solids suspended when the slurry tanks' level drop below 30 percent full.
- Several ball valve failures due to abrasive feed seizing the valves.
- The abrasive feed stream caused excessive wear on the pump diaphragms and check valves.

Melter System

- The cooling water system did not provide adequate coolant flow to all the cooling jackets.
- The welds of one of the four bottom drains failed and caused in leakage of coolant solution into the melter glass chamber.
- Due to size and angle of feed, the side feed tube became inoperable as the additives gradually plugged the line.
- Glass solidified at the melter discharge chamber orifice due to excessive cooling from air in leakage at the orifice.

Gem Machine

- Air cooling was not adequate for the gob cutter, causing the glass to stick to it.
- Need excessive lube spray for gob cutter cooling, which causes problems with collection and drainage of lube spray.

Off-gas System

- Desiccant System was overwhelmed by the amount of moisture it had to remove from the off-gas.
- Undersized and indirect routing of piping caused a high pressure drop and reduced system flow.

Facility

- Freezing weather affected the operability of several systems located outside (i.e., air compressors, recycle water lines, etc.).

Silos Project Path Forward Flow Diagram

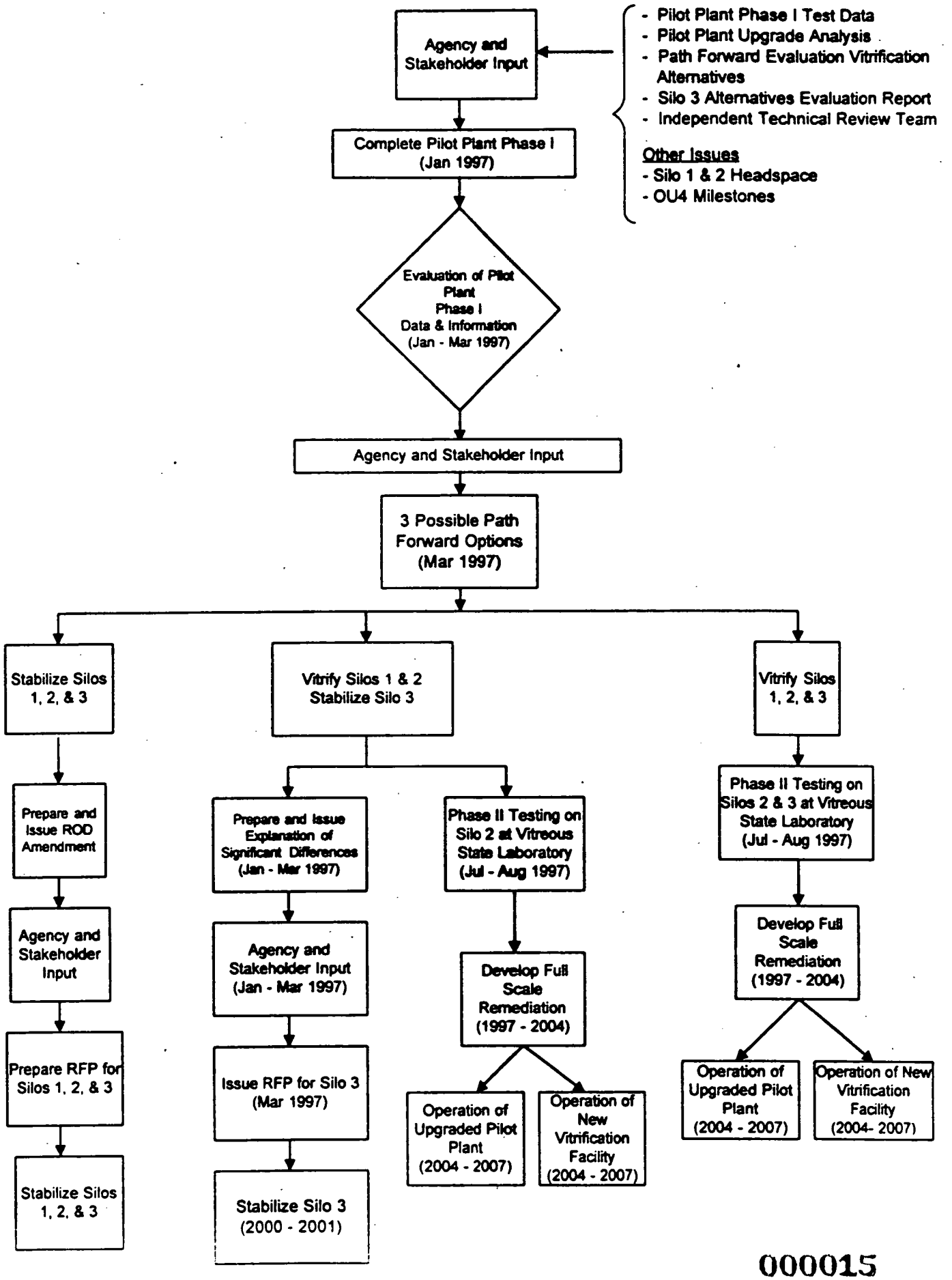

PROPOSED SILOS PROJECT INDEPENDENT TECHNICAL REVIEW TEAM

- Fluor Daniel Fernald is currently assembling a list of prospective candidates to comprise an independent technical evaluation team.

- Fluor Daniel Fernald will be working with stakeholder groups to finalize the independent team to ensure an unbiased and accurate assessment.

- The primary function of the team is to serve as a technical resource to FEMP stakeholders relative to the remediation of Silos 1 and 2 residues by vitrification.

- The team will consist of six to eight members representing expertise in radioactive waste vitrification (both foreign and domestic), industrial glass manufacture, nuclear facility operations, and the academic community.

- The Independent Review Team will meet in the Cincinnati area on a monthly basis.

- The team will interface with stakeholder groups, the DOE and Fluor Daniel Fernald representatives to discuss issues relating to vitrification of Silos 1 and 2 residues and stabilization of Silo 3 residues.

- List of promising prospective candidates include, but are not limited to:

  - Gail Bingham, Glass Industry Consultant
  - Gilles Chevrier, NUMATEK (Cogema/SGN)
  - Bob Cook, Technical Consultant
  - Jim Edmonson, Glass Industry Consultant
  - Arjan Makajani, Vitrification Consultant
  - Bob Roal, retired Chemical Engineer
  - Frank Woolley, Owens - Corning
  - West Valley Candidate (To Be Determined)
  - Savannah River Site Candidate (To Be Determined)

COMPARISON OF SILO 3 RESIDUES TO OTHER THORIUM WASTES ONSITE

	Silo 3 Residues	Thorium Stabilization Waste[a]	Thorium Nitrate Waste	Thorium Overpack Waste
Physical Characteristics	Dry, Very Fine Powder	Dry Solids, Varies - Powders to Hard Cakes	Liquid	Dry Solids
Volume	5,088 yd^3	480 yd^3	35 yd^3	1,500 yd^3
Chemical Characteristics	Moderately Heterogeneous	Highly Heterogeneous - Multiple Wastestreams	Relatively Homogeneous, 0.7 Normal Nitric Acid	Multiple Wastestreams
RCRA Metals Present in Waste				
Arsenic	Present	Present	Not Present	Not Present
Barium	Not Present	Present	Not Present	Not Present
Cadmium	Present	Present	Present	Not Present
Chromium	Present	Present	Present	Not Present
Lead	Not Present	Present	Not Present	Not Present
Mercury	Not Present	Not Present	Not Present	Not Present
Selenium	Present	Present	Not Present	Not Present
Silver	Not Present	Present	Not Present	Not Present
Radionuclides (pCi/g)				
Th-230	21,010-71,650	9,500-16,000	6,320	6,700
Th-232	411-1,451	39,000-76,000	24,700	32,100
U-238	320-2,043	36-1,400	3	2,460
U-235/236	42-158	60-250	0.2	130
U-233/234	ND[b]	24,000-59,000	843	ND
Ra-226	467-6,435	<1,700-7,700	43	NA[c]
Ra-228	82-559	22,000-86,000	21,100	32,100
Dose Rate of Untreated Waste Material	Contact with Container - 5-10 mRem/hr	Contact with Drum - 25 mRem/hr Storage Area - 100-130 mRem/hr	Contact with Storage Tank - 35 mRem/hr	Contact with Drum - 100 mRem/hr
Treatment Requirements	Stabilize Metals	Stabilize Metals	Neutralize Acid and Stabilize Metals	No Treatment Required
Status	Treatment by Stabilization Proposed	Treatment by Stabilization Proposed	Treated, Shipping to the NTS	Shipping to the NTS

[a] Not yet fully characterized. Volume is estimated. Concentrations are for single wastestream.
[b] ND - Not Detected.
[c] NA - Not Analyzed.

COMPARISON OF SILO 3 RESIDUES TO OTHER URANIUM WASTES ONSITE

	Silo 3 Residues	Mixed Waste Stabilization	Miscellaneous Low Level Waste
Physical Characteristics	Dry, Very Fine Powder	Dry and Wet Powder to Solid Monoliths	Dry Solids
Volume	5,088 yd^3	690 yd^3	
Chemical Characteristics	Moderately Heterogeneous	Highly Heterogeneous - Multiple Waste Streams	Multiple Waste Streams
RCRA Metals Present in Waste			
Arsenic	Present	Present	Not Present
Barium	Not Present	Present	Not Present
Cadmium	Present	Present	Not Present
Chromium	Present	Present	Not Present
Lead	Not Present	Present	Not Present
Mercury	Not Present	Present	Not Present
Selenium	Present	Present	Not Present
Silver	Not Present	Present	Not Present
Radionuclides (pCi/g)		U_3O_8 Waste Stream with up to 84% Total U	Maximum Concentrations
Th-230	21,010-71,650	NA[b]	18,800
Th-232	411-1451	NA	530
U-238	320-2,043	NA	336,000
U-235/236	42-158	NA	32,800
U-233/234	ND[a]	NA	ND
Ra-226	467-6,435	NA	1,330
Ra-228	82-559	NA	1,860
Dose Rate of Untreated Waste Material	Contact with Container - 5-10 mRem/hr		
Treatment Requirements	Stabilize Metals	Stabilize Metals	No Treatment Required
Status	Treatment by Stabilization Proposed	Treated, Shipping to the NTS	Shipping to the NTS

[a] ND - Not Detected.
[b] NA - Not Analyzed

444

000019

SILOS PROJECT

VITRIFICATION PILOT PLANT UPDATE

October 15, 1996

VITRIFICATION PILOT PLANT WORKSHOP OBJECTIVES

- Pilot Plant Status
- Pilot Plant Path Forward
- Silos Project Path Forward

VITRIFICATION PILOT PLANT
WHAT IS A PILOT PLANT?

- Experimental Test Facility
- Representative Model of Full-scale Facility
- Provides Full-scale Design Information
- Defines Operating Parameter Ranges
- Provides Operability and Maintainability Information and Experience
- Identifies System Performance Limitations
- Provides Actual Cost and Schedule Information

VITRIFICATION PILOT PLANT STATUS

- Pilot Plant Operational June 19, 1996
- Four Test Campaigns
  - Campaign I - Integrated Operational Test - Complete July 1996
  - Campaign II - Silos 1, 2, & 3 Surrogate - Complete September 1996
  - Campaign III - Silo 3 Surrogate
  - Campaign IV - Silo 1 & 2 Surrogate
- Complete All Testing January 1997

000022

VITRIFICATION PILOT PLANT CAMPAIGN I OBJECTIVES

- Campaign I - Benign Glass Formula
- Establish Melter Control
- Synchronize Operation of Melter and Gem Machine
- Increase Glass Output to 3 Metric Tons Per Day

000023

VITRIFICATION PILOT PLANT CAMPAIGN II OBJECTIVES

- Campaign II - Silos 1, 2, and 3 Blend Surrogate
- Melter Acceptance Test
- Gem Machine Acceptance Test
- Evaluate Melter Normal Operating Efficiency

000024

VITRIFICATION PILOT PLANT CAMPAIGN III OBJECTIVES

- Campaign III - Silo 3 Surrogate
- Test Effects of Sulfates and High Phosphates on Glass Melting Process
- Test Effects of SO_x and NO_x in Melter Off-gas
- Evaluate Devitrification Potentials
- Evaluate Electrode Erosion

000025

VITRIFICATION PILOT PLANT CAMPAIGN IV OBJECTIVES

- Campaign IV - Silos 1 and 2 Surrogate with Bentonite
- Evaluate Thickener Tank Operation for Bentonite Settling
- Evaluation of Lead, Barium, Alumina, and Sulfates on Glass Making Process
- Evaluate Electrode Erosion

VITRIFICATION PILOT PLANT
CAMPAIGN I - ACCOMPLISHMENTS

- 12.5 Tons of Glass Produced
- 19% Operating Efficiency
- Achieved 2 tons per day Throughput Rate
- Identification of Unit Operation Optimization

VITRIFICATION PILOT PLANT

44 4

CAMPAIGN I - LESSONS LEARNED

- Film Cooler Plugging
- Discharge Chamber Plugging
- Excessive Moisture/Particulates in Off-gas
- Gem Machine Cooling/Lube Spray

000028

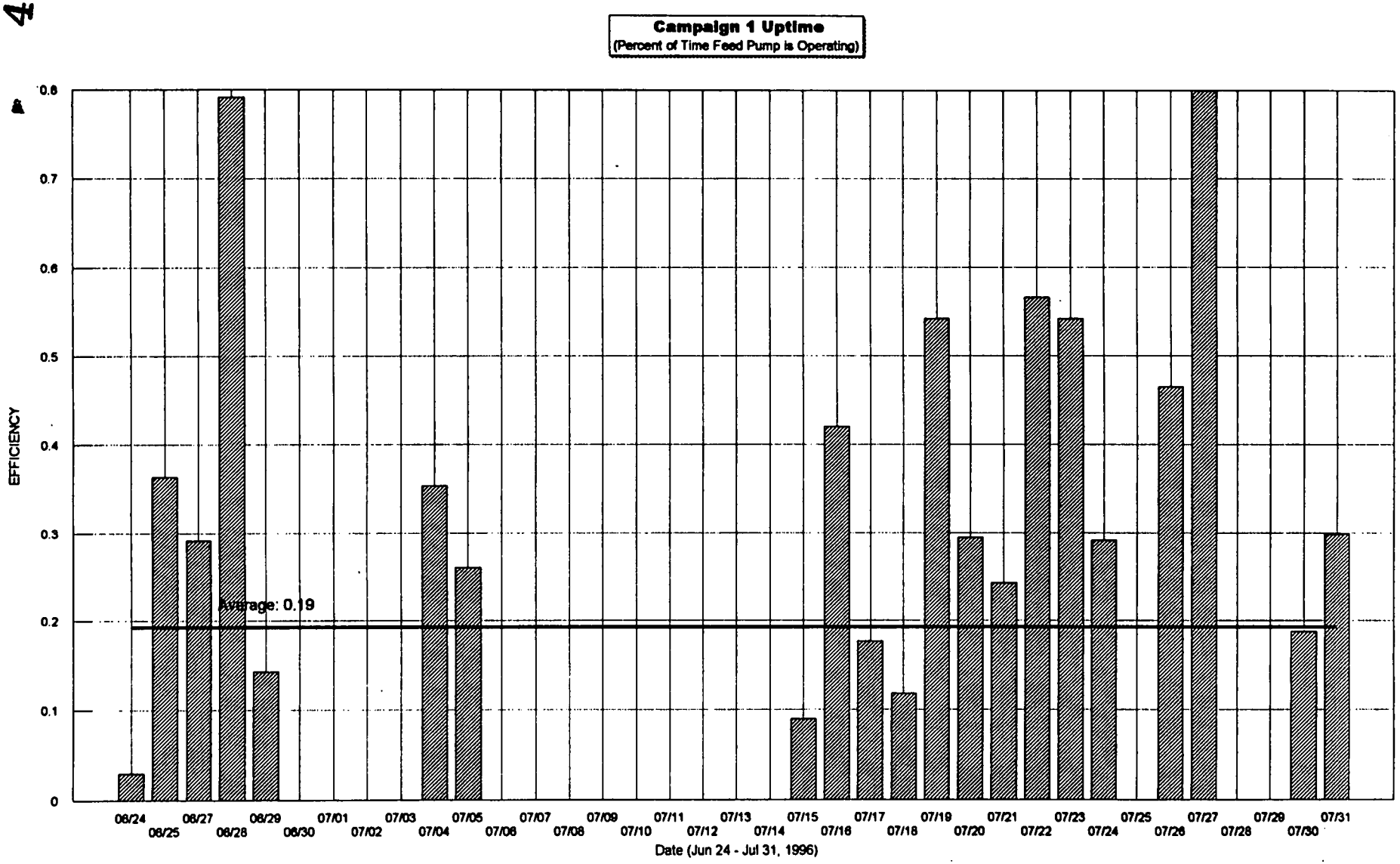
Campaign 1 Uptime
(Percent of Time Feed Pump is Operating)
EFFICIENCY
0.8
0.7
0.6
0.5
0.4
0.3
0.2
0.1
0
Average: 0.19
06/24
06/25
06/27
06/28
06/29
06/30
07/01
07/02
07/03
07/04
07/05
07/06
07/07
07/08
07/09
07/10
07/11
07/12
07/13
07/14
07/15
07/16
07/17
07/18
07/19
07/20
07/21
07/22
07/23
07/24
07/25
07/26
07/27
07/28
07/29
07/30
07/31
Date (Jun 24 - Jul 31, 1996)

VITRIFICATION PILOT PLANT
CAMPAIGN II - ACCOMPLISHMENTS

- 11 Tons of Glass Produced
- 27% Operating Efficiency
- Achieved 2 tons per day Throughput Rate
- Identification of Unit Operation Optimization

VITRIFICATION PILOT PLANT
CAMPAIGN II - LESSONS LEARNED

- Slurry Feed Composition
- Melter Feed Pump
- Excessive Moisture/Particulates in Off-gas
- Lid Heater
- Gem Machine Feed
- Melter Bottom Drain Replacement

000031

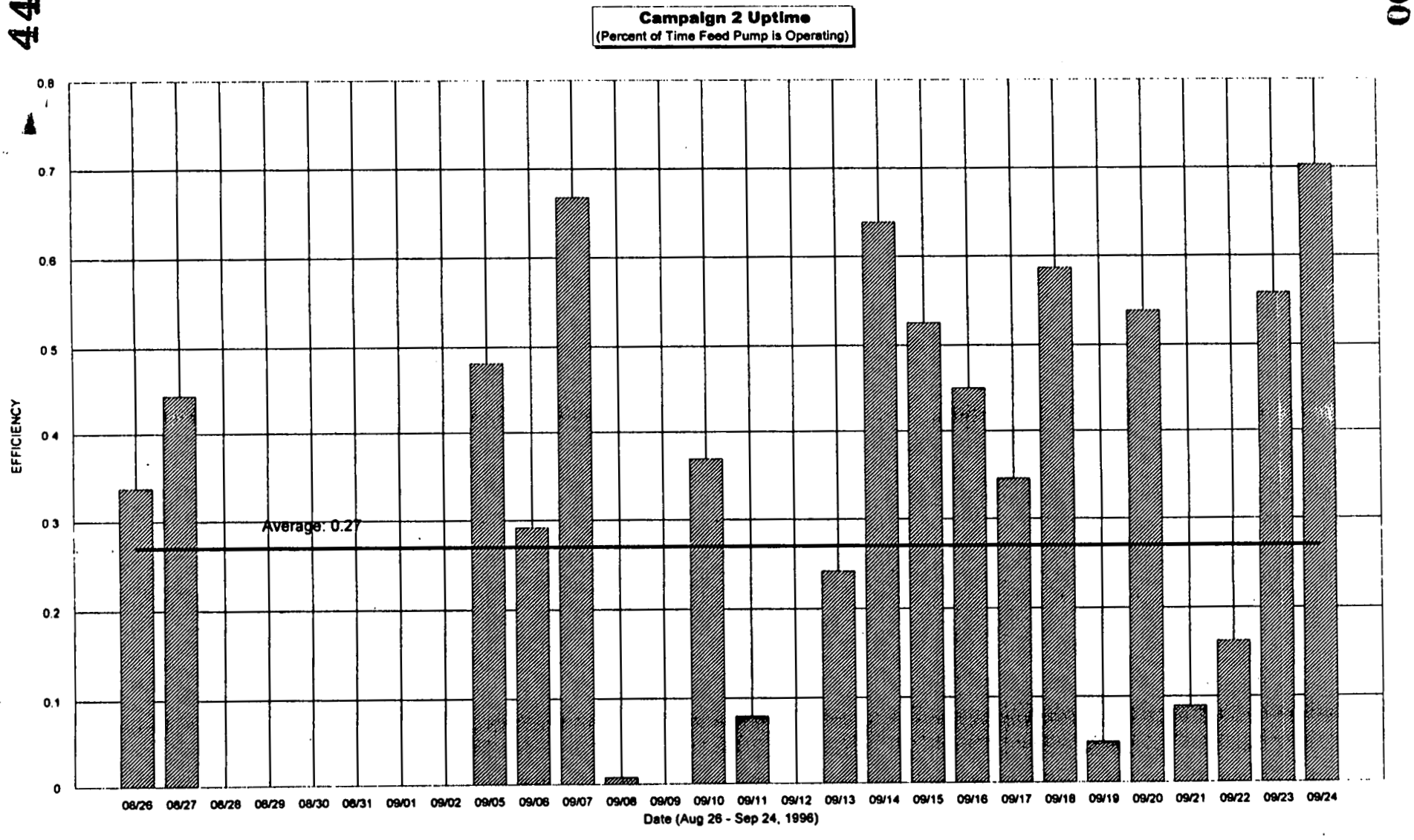
Campaign 2 Uptime
(Percent of Time Feed Pump is Operating)
EFFICIENCY
0.8
0.7
0.6
0.5
0.4
0.3
0.2
0.1
0
Average: 0.27
08/26 08/27 08/28 08/29 08/30 08/31 09/01 09/02 09/05 09/06 09/07 09/08 09/09 09/10 09/11 09/12 09/13 09/14 09/15 09/16 09/17 09/18 09/19 09/20 09/21 09/22 09/23 09/24
Date (Aug 26 - Sep 24, 1996)

VITRIFICATION PILOT PLANT PATH FORWARD

444

- Campaign Testing Completion January 1997
- Support System Modifications
- Melter Maintenance

000033

VITRIFICATION PILOT PLANT MODIFICATIONS

- Slurry Feed System
  - Replace Slurry Pump
  - Simplify Slurry Piping Routing
  - Enhance Slurry Tank Nozzle Spray
- Off-gas System
  - Heat Tape and Insulation Lines at HEPAs
  - Remove Excessive Particulates
  - Reroute Off-gas Line

VITRIFICATION PILOT PLANT MODIFICATIONS (CONT'D)

- Facilities
  - Install Heat Tracing and Insulation to Weatherproof Plant Prior to Winter
- Gem Machine
  - Water Cool the Cutter
- Melter
  - Electrical Isolation of Bottom Drains
  - Install Larger Moyno Feed Pump to Increase Throughput Rate
  - Lid Heaters Replacement
  - Install Knife Gates to Provide Isolation of View Ports for Maintenance Activities
  - Replace Thermowells

SILOS PROJECT
PATH FORWARD

- Complete Pilot Plant Phase I Operations (Jan. 97)
- Evaluate Available Data and Information (Jan. 97 - Mar. 97)
  - Pilot Plant Phase I Test Data
  - Pilot Plant Upgrade Analysis
  - Silo 3 Alternatives Evaluation Report
  - Independent Technical Review Team
- Agency and Stakeholder Involvement
- Reach Decision on Path Forward

SILOS PROJECT
PILOT PLANT PHASE I TEST DATA

- Glass Production
- Established Viable Feed Formula Envelopes
- Established Operating Parameter Ranges
- Identified System Performance Limitations
- Generated Lessons Learned Database
- Obtained Operator Experience

000037

SILOS PROJECT
PILOT PLANT UPGRADE ANALYSIS

- Established Feasibility for Optimization of the VITPP for a Production Plant
- Modifications Can be Accomplished in Compliance with ARARs
- Evaluated Three Alternatives
- Identified Required System Modifications
- Estimated Costs
- Estimated Schedule Durations

SILOS PROJECT
SILO 3 ALTERNATIVES DECISION

- Decision is Independent of Silos 1 and 2
- Obtain Stakeholder Involvement
- Address Stakeholder Concerns
- Regulatory Process
- Implement Alternative Treatment Approach

000039

SILOS PROJECT INDEPENDENT TECHNICAL REVIEW TEAM

- Currently Assembling List of Prospective Candidates
- Will work with Stakeholders to Finalize Team
- Will Interface with Stakeholder Groups, DOE and Fluor Daniel Fernald Related to:
  - Vitrification Silos 1 and 2 Residues
  - Stabilization Silo 3 Residues
- Meet in Cincinnati Area on Monthly Basis

Silos Project Path Forward Flow Diagram

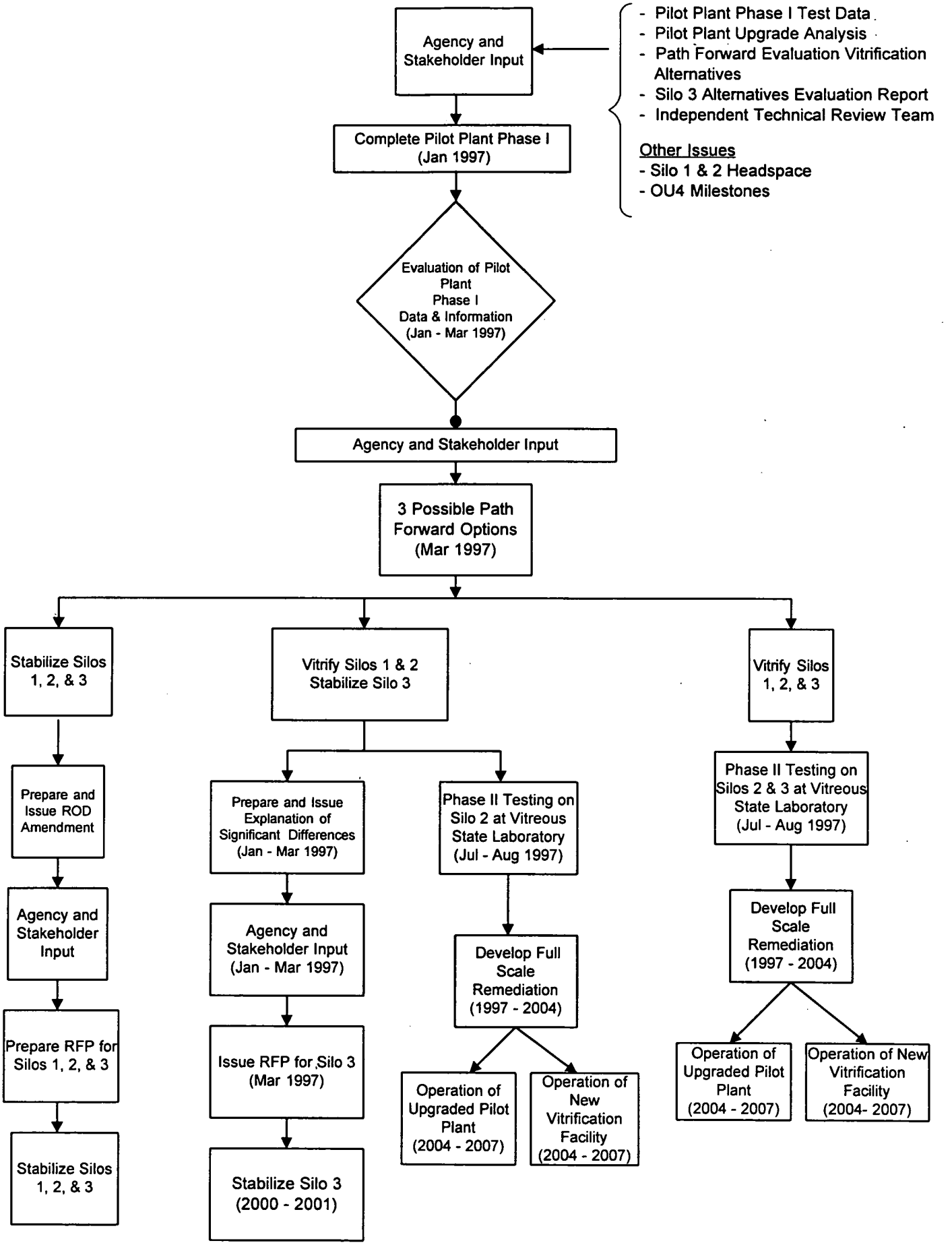

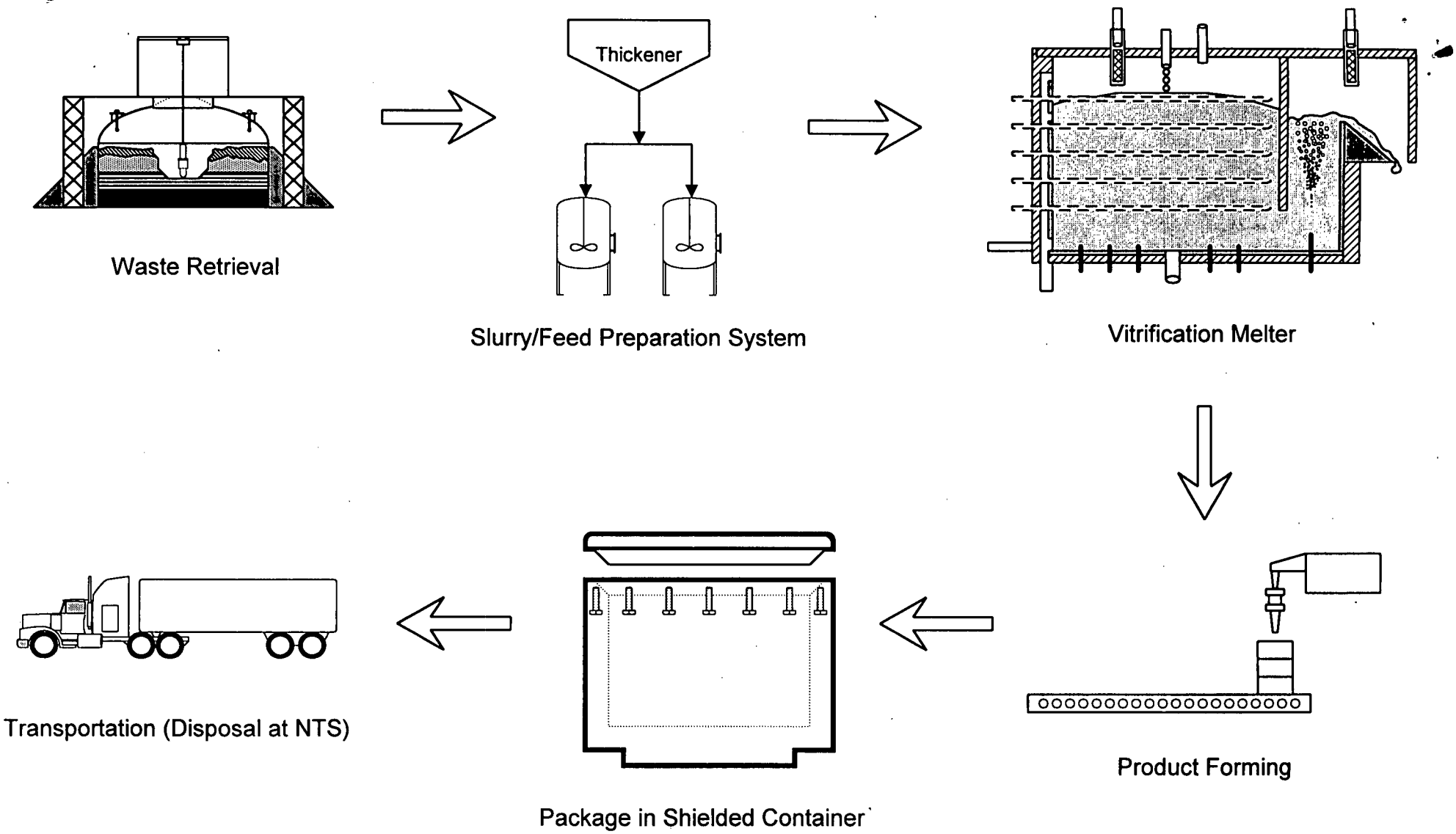

Silos 1 and 2 Remediation Flow Diagram

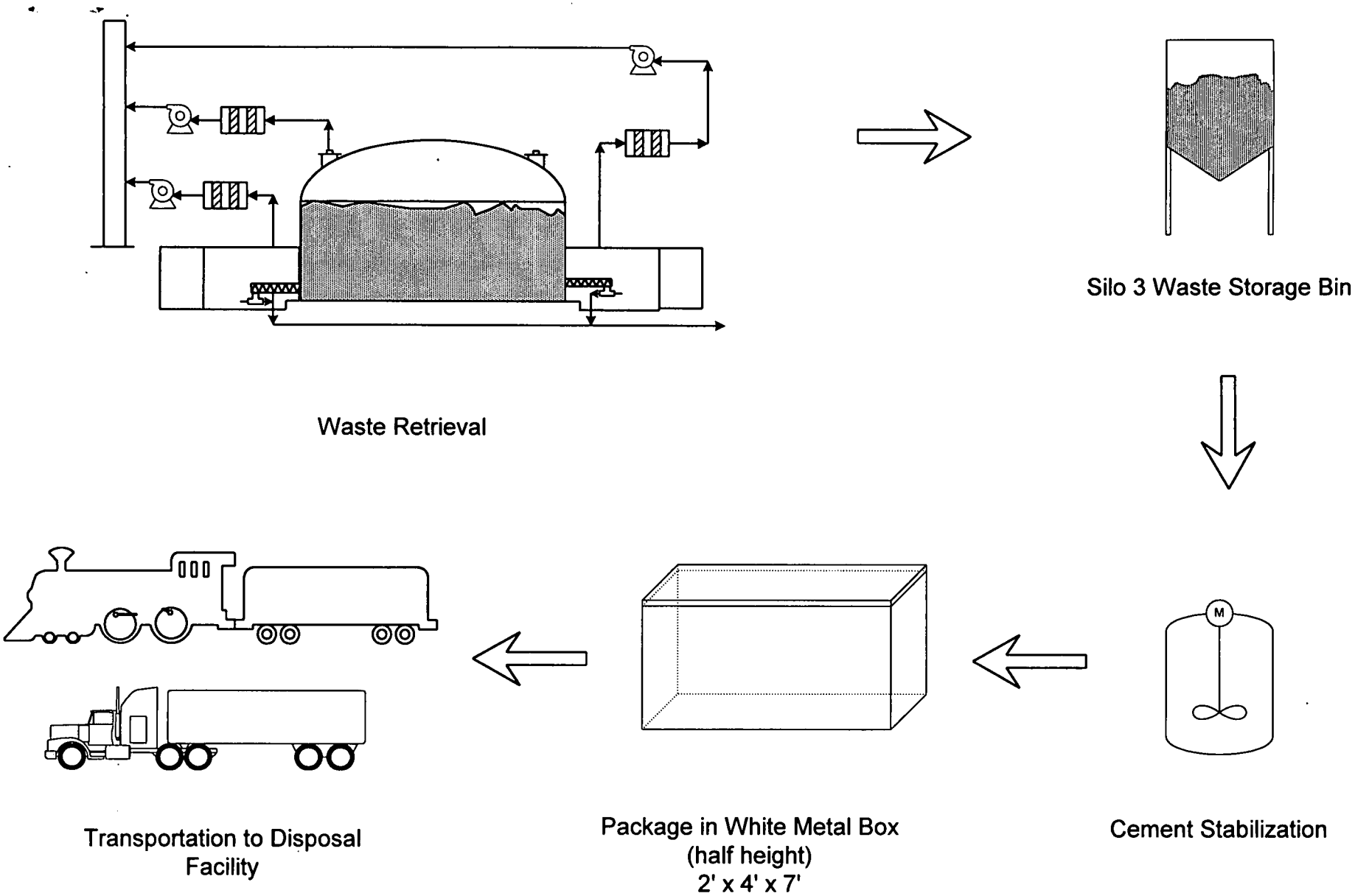

Silo 3 Remediation Flow Diagram

000043

444