618

18

4-406.~~5~~

SILO PROJECT INDEPENDENT REVIEW TEAM DOCUMENTATION - THE FERNALD MOBILE MIXED WASTE STABILIZATION

01/00/97

~~9~~ 10

REPORT

THE FERNALD MOBILE MIXED WASTE STABILIZATION PROJECT

John Sattler - US Department Of Energy, Fernald Site Office
Pete Yerace - US Department Of Energy, Fernald Site Office
Richard Kasparek - Fernald Environmental Restoration Management Corporation
Tim Kimball - Perma-Fix Environmental Services, Inc.
Ben Crocker - Performance Development Corporation

ABSTRACT

DOE Fernald is nearing completion of a project objective to treat legacy mixed waste for shipment and disposal to the Nevada Test Site (NTS). In pursuing this challenging objective, DOE-Fernald and the site cleanup contractor, Fernald Environmental Restoration Management Corporation (FERMCO), have defined the requirements and purchased the fixed-price services of a private waste treatment subcontractor. The subcontractor has mobilized and initiated stabilization of the mixed waste. The subcontractor is a team consisting of Perma-Fix Environmental Services, Inc. (Perma-Fix), and Performance Development Corporation (PDC).

The mixed waste at Fernald was generated during uranium processing operations and remedial actions at the DOE facility. This waste is classified as both low-level radioactive and hazardous, which requires treatment prior to disposal at NTS. The Mobile Mixed Waste Stabilization Project is using the Perma-Fix Process™ to chemically stabilize and solidify approximately 1,850 drums of waste. Chemical hazards of the targeted project waste are soluble heavy metals including lead, barium, and chromium (EPA waste codes D004 - D011).

Following processing by the Perma-Fix team, successful treatment of the waste is verified by an NTS approved laboratory using the toxicity characteristic leaching procedure (TCLP). The treated waste no longer exhibits the hazardous characteristic and will be shipped in metal boxes as solid grout monoliths to DOE's NTS Facility for disposal as low-level radioactive waste.

Under the *Federal Facility Compliance Act* (FFCAct), FERMCO has developed a Site Treatment Plan (STP) that specifies a preferred option for each of several mixed waste streams at Fernald. This project meets the requirements for mobile stabilization as Fernald's preferred option in the STP. By implementing the STP at the Fernald Site, FERMCO has taken the lead role in complying with the requirements of the FFCAct.

A number of lessons have been generated by this bold new approach to cleaning up DOE's waste inventories. This paper will capture many of the lessons learned on this project in promoting what we believe is a promising strategy for site clean-up that is faster, safer, and cheaper than many competing options. The key features of the project include mobile on-site treatment, fixed-price contracting, and integrated teamwork among Perma-Fix, FERMCO, and DOE FERNALD participants.

INTRODUCTION

The objective of the Mobile Mixed Waste Stabilization Project is to safely treat approximately 1850 drums of characteristic mixed low-level radioactive waste (LLRW) currently being stored at Fernald. These wastes have been characterized as containing waste constituents regulated under EPA waste codes D004 through D011. The wastes will be treated at Fernald and sent to the NTS for disposal using Best Demonstrated Available Technology (BDAT) to meet RCRA Land Disposal Restrictions (LDR) and NTS waste acceptance criteria (WAC) established under the *Nevada Test Site - Defense Waste Acceptance Criteria, Certification, and Transfer Requirements (NVO-325, Rev. 1)*. BDAT will be accomplished using a cement based stabilization/solidification process that renders toxic heavy metals and radionuclides insoluble by precipitation, and locks them in a grout matrix.

On-site waste treatment services are being accomplished by personnel from Perma-Fix and PDC working in conjunction with DOE Fernald and FERMCO personnel.

WASTE STREAMS

The 1850 drums of legacy mixed waste have been in storage in RCRA-permitted warehouses at Fernald. The drums of mixed waste have been grouped and categorized using Material Evaluation Form procedures developed by FERMCO. For many of the drums, Real Time Radiography (RTR) was used for identifying drum contents. This procedure uses x-ray technology

to view the contents of a container, and to determine the physical properties of the waste such as presence of free liquid, particle size, and internal container capacity. The 1850 drums have been divided into six general waste categories:

1. Grit Blast residues - approx 905
2. Solidified furnace salts - approx. 145 drums
3. Sump cakes - approx. 465 drums
4. Construction rubble - approx. 40 drums
5. Miscellaneous trash - approx. 25 drums
6. Miscellaneous (1-5) additional waste - approx. 300 drums

STABILIZATION PROCESS

The waste treatment process employed in stabilizing Fernald waste is a production process based on optimal staging of incoming waste containers, screening and sorting the larger fraction, removing incompatible material, size reducing the larger fraction, and redistributing the reduced material with original container material. Treatment consists of mixing chemical reagents to precipitate soluble heavy metals, pozzolans, and fresh or contaminated water to create a slurry that is poured in metal boxes supplied by FERMCO. Figure 1 is a block flow diagram of the Mobile Mixed Waste Stabilization process. Figure 2 is a schematic illustrating how materials handling is accomplished.

STABILIZATION UNIT

The mobile treatment unit includes the following engineered facility and equipment and are depicted in Figure 3 - Equipment Layout:

1. Incoming waste staging area
2. Deheading and inspection station
3. Screen hopper
4. Sorting table
5. Shredder
6. Mixers
7. Contaminated water holding tank
8. Liquid reagent tank
9. HEPA filtration units
10. Cement silo
11. Empty drum staging area
12. Decanting and curing area
13. Tented soaking area

RESULTS

As of January 31, 1996, 905 drums of grit blast have been successfully treated and are being prepared for shipment and disposal at NTS. Another 145 drums of solidified furnace salts have been treated and are awaiting the results of confirmation sampling by TCLP. The project had planned to process an average of 35 drums per work day. To date, processing results have varied significantly, some days have included no processing due to equipment maintenance or staging efforts, and many days have seen processing rates of 50 to 65 drums. Our best efforts have sustained better than 10 drums per operating hour. The project is planned to complete processing of the contract goal inventory by March 20, 1996. Based on our results to date, this is attainable.

LESSONS LEARNED FROM THE PROJECT

The lessons learned as the result of this very successful project include the following:

- On-site treatment by a private subcontractor is achievable

There are doubts within DOE and prime contractor ranks that it is possible to bring private subcontractors on site, have them live by DOE rules, work with the site labor force, manage any kind of schedule, or control costs. This project has

demonstrated each of these concepts to be false. For the Mobile Mixed Waste Stabilization Project, we entered into a fixed-price contract and prepared project-specific plans acceptable to the Ohio EPA, US EPA, and DOE in less than 60 days. This documentation included a CERCLA Work Plan, Health & Safety Plan, Quality Assurance Plan, Process Control Plan, project procedures, and Processing Area drawings. After Ohio EPA and US EPA approval, Perma-Fix mobilized the processing equipment, performed pre-operational testing, and successfully responded to an independent Operational Readiness Assessment demonstrating compliance with DOE requirements. This was also done in less than 60 days. When elements of the contract were found inconsistent with a pre-existing agreement, Perma-Fix worked out arrangements to allow appropriate participation of site workers. This action enhanced site response and created a teamwork atmosphere among project workers. The project is nearing completion. Treatment and disposal costs are low compared to off-site alternatives. There have been no price increases to the subcontract. Major portions of the site's mixed waste have been treated to greatly reduce public risk prior to shipment on the open highways.

- DOE site labor force can work with private contractors if concerns are considered and resolved before operations begin, and cooperatively managed during the project

After the project began, FERMCO discovered that elements of Perma-Fix's work scope conflicted with the pre-existing labor agreement. Perma-Fix renegotiated project activities with FERMCO such that Fernald Atomic Trades and Labor Council (FAT&LC) union members had an expanding role in project activities. There had been considerable concern at the beginning of the project that it would be hard to manage the schedule in this way, but all schedules have been met to date.

- Technology is only as important as a good plan, competent personnel, constant communication, and cooperation

There is considerable opinion that stabilization is a low-tech technology, not robust enough to attack DOE's mixed waste problems. Our experience has demonstrated that stabilization does work on a fairly broad range of waste types, can be mobilized and employed quickly, has a great deal of operational experience, has equipment and project costs that are much better understood, is very amenable to small batches for handling the wide variety of waste types, can be performed inside currently existing facilities, and is much less costly than many of the more exotic technologies crowding the national headlines.

One of the lessons learned on this project has been the relative importance of technology compared to other project challenges. With adequate experience and due care, making a solid that passes TCLP is not that difficult. The challenge is in planning and executing project activities with sufficient detail to satisfy project regulators. These include overviewers from: quality assurance and health & safety, FERMCO project, DOE, Ohio EPA and US EPA, and NTS. Any project that is inadequately prepared to deal with this bigger challenge runs a much higher risk of failure.

- Use waste to treat waste

Stabilization requires the addition of a number of non-waste materials during treatment of the waste. These include water, pozzolans, chemicals used to precipitate contaminants, and mixing. Some waste products can be used in this process. For the Mobile Mixed Waste Stabilization Project, the water balance was managed to allow for the reuse of waste water. Additionally, we identified and were able to use surplus chemicals that were waiting for disposition on the Fernald site. These chemicals were used in waste processing for precipitating contaminants. The project also processed much of the solid waste generated during operations with the legacy waste stream. These actions support the waste minimization/ pollution preventative initiatives driven by both EPA and DOE.

- Limit government liability with low cost commercially available equipment

One of the major risks of treating mixed waste, on site or off site, is the potential for the processing equipment to become contaminated, and failure to decontaminate causing the government to become the owner of some used contaminated equipment. This situation can and has happened many times. The lowest-risk way of limiting government liability is for contractors to propose and use as much simple, inexpensive, and commercially available equipment as possible, considering the minimum volume of equipment subject to waste disposal. Also design of equipment must address decontamination ability.

- Small batch capability provides control features not available in continuous feed processes and is better suited to the many "cats and dogs" that exist in legacy wastes

Most of the money and the press in waste treatment has been spent on concepts using continuous processing equipment designed for the enormous volume of mixed waste to be treated. The problem with most large processes is that they generally work best on homogeneous and/or well characterized material. Much of the waste that has been identified at different DOE sites is far from homogeneous. Waste stream characteristics are rarely known well enough for continuous flow processes to respond to variations in the waste. Expensive automated systems can seldom manage highly variable waste streams, as well as trained and experienced operators can manage them. Stabilization is one of the few existing technologies offering the needed body of experience. When continuous processes are forced to deal with such varied material, it is often necessary to resort to batching. The equipment is usually not designed for batch operation. Batching in processes designed for continuous flow is achievable, but quite expensive compared to simpler options.

- Small business can do the job

Another myth often believed by people in this business is that only major corporations are viable to attempt this type of project. The false impressions include having a larger talent pool to draw upon, deeper pockets if there is a problem, a more relevant experience base, an ability to impress the regulators and a skeptical public, and a better capability to deal with problems. The Mobile Mixed Waste Stabilization Project has employed the services of Perma-Fix and PDC, both small businesses. They have performed well. There have been many challenges for both companies on a number of occasions. Their senior managements have participated fully. Basically there is a lot more at stake with these two small businesses than there would have been with large businesses and the net effect has been an extremely responsive project organization. Our aggressive schedule would not likely have been met except for this level of attention.

- On-site CERCLA treatment can be faster, safer, and cheaper than off-site RCRA Treatment, Storage, and Disposal (TSD) Facilities

Many DOE sites have concluded that the only viable alternative is to send mixed waste off site to RCRA TSD facilities that also have NRC licenses. The problem has been that this includes a very small group of companies, with technologies having narrow application, difficult prerequisites, and considerable expense. Off-site treatment generally requires repackaging into DOT approved containers. Repackaging can be very expensive. Handling and monitoring of waste prior to disposal is also a major operating cost. The Fernald Mobile Mixed Waste Stabilization Project has been performed as a CERCLA removal action, allowing on-site treatment with mobile equipment without either a RCRA part B permit or a Radioactive Material license. While the project was authorized by the Ohio EPA and the US EPA under CERCLA, the project Work Plan addressed all substantive requirements of a RCRA part B permit and was actually reviewed by the RCRA group within Ohio EPA and US EPA. This efficiency has allowed schedules to be moved forward and permitting expense to be avoided. The greatest enhancement is the ability to stabilize waste at the source, greatly reducing health & safety risk prior to shipment on the open highways. This type of project also allows much greater control of the treatment process which is appropriate considering generator liability. On-site treatment also allows better response to dealing with any abnormal situations related to characterization, fitness for treatment, container degradation and identity, and sampling. By estimate, the life-cycle cost of this project, compared to known off-site possibilities, is much less.

- Demonstrate subcontractor ability to comply with DOE requirements with an Operational Readiness Assessment

One of the challenges of the Mobile Mixed Waste Stabilization Project has been addressing the impression that private treatment companies will not be able to work under DOE rules. For this project, we demonstrated compliance with DOE requirements by subjecting the project to an independent Operational Readiness Assessment (ORA). These ORAs are by nature quite a challenge for participants on all sides of the assessment, but acceptable findings and a recommendation to proceed do much to bolster DOE confidence that contractors can perform safely as advertised.

- Develop planning documents to level 5 detail to avoid regulatory delays

The Mobile Mixed Waste Stabilization Project is pursuing an aggressive schedule and has relied on prompt attention by regulating bodies on several occasions. One of our approaches to minimizing review cycles and potential delays has been to provide extraordinary detail about our plans for the project, right up front, to Ohio EPA and US EPA to minimize their asking for more detail later. Initially, we developed a work breakdown structure expanded down to level 5 activities. We then defined our plan of action and schedule down to this level. The challenge in doing this was keeping our aggressive schedule while developing this level of detail.

The contract was issued to Perma-Fix on May 30, 1995. The contract schedule called for delivery of planning deliverables to FERMCO by July 5, 1995. In the following 3 weeks, as a result of teamwork between Perma-Fix, FERMCO, and DOE, the project submitted a Work Plan to Ohio EPA and US EPA. This plan was conditionally approved without revision on September 28, 1995.

DOE and FERMCO have spent a great deal of energy in keeping Ohio EPA and US EPA abreast of upcoming activities, and they have been characteristically prompt in approving clean-up and removal actions.

- Prepare good waste characterization including ample sampling, traceable documentation, and real time radiography to get good fixed-price quotations and regulatory buy-in to proposed plans

DOE has been working on an initiative to increase fixed-price contracting in an effort to improve cost performance on the nations tax base. The problem is getting fixed-price quotations for waste treatment services on the basis of process knowledge accrued under the security of the cold war. Proceeding on the basis of this approach is fairly unrealistic. Equally important is securing regulatory buy-in to planned activities rooted in a firm knowledge about the contaminants of concern. Extensive characterization is required providing significant tangible evidence of the nature and extent of contaminants in the waste stream. The approach we took on the Mobile Mixed Waste Stabilization Project was to perform ample confirmatory sampling compared to process knowledge, prepare RTR films on a large population of the waste drums considered, and prepare a strategy for waste grouping that is traceable to container ID, sampling data, RTR, and process knowledge data.

- Rumors of waste swell related to solidification have been greatly exaggerated

There is information that suggests that waste swell due to the addition of pozzolans to hazardous, mixed, and radioactive waste streams can be as much as 100% to 200%. These figures, as assumptions, have been used to estimate the disposed life-cycle cost of stabilization to be greater than other more complex technologies. Our experience on the Mobile Mixed Waste Stabilization Project has demonstrated waste swell less than 15% as a result of existing void space and overpacks in the incoming waste drums. There are situations that would result in waste swell in multiples of original volume, but our project results challenge some life-cycle cost claims that are being made. A key consideration is the compressive strength desired. Producing a low strength grout minimizes volumetric swell due to added reagents.

- Carefully select Source Evaluation Board (SEB) to level playing field for proposals

Evaluation criteria are usually established by the SEB to provide equal evaluation for all proposers. However, there is still a normal bias for the known, the big, and the powerful. This is perfectly logical in the sense that if they are big and powerful they must be doing things right, have a talented work force, and have faced and solved many problems. However, in an attempt to support small business participation, DOE has set goals for subcontracting with small business. This suggests SEB's need to be equipped with more knowledge about proposers than is available in the Wall Street Journal and special interest trade publications. Major corporations were included in an unrestricted competition for this important project. However, a small business was selected and has performed quite well.

- Evaluate subcontractor ability to decontaminate and remove equipment at contract completion

In general, the extent of the government's liability for a project such as the Mobile Mixed Waste Stabilization Project is the price of services, plus the fair market value of contaminated equipment. This cost is perhaps complicated by the disposal cost of equipment as radioactive or mixed waste. With this in mind there are a few things that contractors can do that can have the enhancing effect of limiting the government's risk. These are keeping the treatment scheme no more complicated than necessary, using as much simple and commercially available equipment as possible, keeping any disposal volume as small as possible, bolstering your proposal with a plan for decontamination, and generally describing corporate plans for released equipment after project completion.

- Have DOE's contractor provide HEPA ventilation meeting subcontractors needs because of DOE safety rules.

There are a number of practices and validation tests used on DOE sites that are not generally available to the private sector. For the Mobile Mixed Waste Stabilization Project, we intended for the selected subcontractor to size and provide HEPA ventilation adequate for the project. After the units were purchased, delivered, and ductwork installation was underway, we

discovered that site practice required di-octyl-phthalate (DOP) testing by DOE in Oak Ridge for each filter element used. Given the schedule constraints we faced, this was not possible. The site had a number of surplus HEPA filtration units with in-stock filters which met the requirements. In the end, FERMCO provided the needed HEPA units meeting subcontractor requirements. Given site rules for monitoring, filter change, sampling, record keeping, and filter testing, it makes more sense for DOE's contractor to support this requirement rather than passing it on to subcontractors.

- Consider weight, handling, and disposal criteria of the disposal facility in selection of waste containers

For the Mobile Mixed Waste Stabilization Project, FERMCO selected and purchased white metal boxes. These boxes are roughly half as high as conventional B-25 boxes, are made with an integral skid for fork truck handling, and are designed for maximum load-bearing requirements based on an empty container. These containers weigh approximately 6000 pounds when filled with the solid waste form. These features have been chosen to satisfy the waste acceptance criteria of the NTS.

- Integrating participation of subcontractors in weekly project meetings with site interface groups

Early after award of the project subcontract, Perma-fix began attending the weekly project meetings. The result was that much planning and other project information was made available to site groups earlier, and by the time equipment started showing up, Perma-fix was well integrated into the site team and could address and resolve issues with the site groups involved. Meeting the project's schedule would not have been possible otherwise.

- Select a subcontractor who demonstrates an ability to live and operate within DOE's "culture"

When the SEB evaluated submitted bids for the Mobile Mixed Waste Stabilization Project, most of the bidders could demonstrate that they had stabilized hazardous or radioactive waste. What became impressive to the SEB were proposals that demonstrated they understood and could operate within DOE's culture of security, site access, directives, standards, guides, and procedures. Perma-Fix demonstrated this capability by partnering the project with PDC, a company having extensive experience in DOE culture. PDC has a very strong and successful background working with contractors in support of DOE initiatives. Perma-Fix and PDC composed a project team that identified needed project positions and personnel from both companies. The proposed project team had demonstrated qualifications and experience to perform project functions on a DOE site.

- Integrate the disposal site early in the process identifying their needs and implementing systems to meet them (i.e., a Process Control Plan, Nuclear Quality Assurance Program, ample documentation, and traceability)

Mixed waste treatment has a limited purpose unless there is a subsequent strategy to dispose of the treated waste. For DOE waste, there is not a less expensive option than acceptable disposal at the Nevada Test Site. NTS was developed and operated to handle radioactive waste, not mixed waste. A fairly new version of the NTS Waste Acceptance Criteria (NVO-325 Rev. 1) allows disposal of mixed waste where the hazardous characteristic has been removed. Until now, this feature has not been extensively used and operating practices at NTS are still in the developmental phase.

The key to paving the way for NTS acceptance of Fernald mixed waste has been to develop a site program for characterizing, identifying, containerizing, confirmation sampling, documenting and transporting waste products acceptable to NTS. For FERMCO's subcontractor, Perma-Fix, this included preparation of a Process Control Plan, demonstration of a Nuclear Quality Assurance Program, and a project-specific Sampling Plan responsive to FERMCO's agreement with NTS.

In conjunction with the Mobile Mixed Waste Stabilization Project, FERMCO has focused on keeping NTS abreast of project plans, conducted Fernald site visits for NTS participants, worked through closure of NTS audit findings, and supported NTS inquiries for mixed waste treatment. These actions have paved the way for disposal of the projects treated mixed waste at the NTS facility.

- Keep in close contact with regulators (i.e., DOE, Ohio EPA, US EPA, and NTS)

None of the responsive behavior that has been demonstrated by DOE, Ohio EPA, US EPA, and NTS would have been possible without an informational network that allowed these participants to keep up with project plans and schedules. Having information available and flowing has contributed to creating team work among DOE, FERMCO, Perma-Fix, Ohio EPA, US EPA, and NTS participants.

6

- Plan for a realistic schedule considering the limitations of the site infrastructure

Contractors might make big claims about how much waste per unit time they have processed on superfund sites, but none of that really matters for a DOE on-site treatment. Many site groups interface with project activities, and sooner or later site infrastructure is going to limit processing capability. For this project, the Request for Proposal defined what the desired daily processing rate would be. Even so, several proposals were submitted on the basis of much greater processing ability.

- Temper the zeal to mix waste streams to minimize volume with the need to have traceability of the waste and accountability of Special Nuclear Material (SNM)

DOE Orders require FERMCO to retain accountability of SNM on site. For the Mobile Mixed Waste Stabilization Project accountability, this has meant that we devise a scheme to track isotopic balances of SNM in project waste streams prior to, during, and after processing by Perma-Fix. This need has driven the procedural systems developed for the project, and information taken and managed at various stages during treatment operations.

The complexity of this task caused us to carefully define and understand the waste contents programed for different treatment episodes. We also decided not to mix some waste streams that could have further minimized the final disposed volume.

- Start with the easier material first

The waste streams in the Fernald Mobile Mixed Waste Stabilization Project had considerable variation. Some were expected to be more difficult to successfully stabilize than others. There was a strong temptation to require the processing of the most-difficult-to-treat waste stream first to allow the maximum of time for the toughest challenge. We wisely chose however, to start with the waste stream expected to provide the minimum challenge for treatment. This allowed the best possible set of conditions for the project team to get:. 1) all equipment functioning properly, 2) all organizational and process interfaces defined, 3) all project procedures improved, 4) operating data, 5) on-line air monitoring established, and 6) personal protective equipment evaluated.

- Closely work the interface with the Federal Facility Compliance Act

In the early project planning stage, there was a concerted effort to identify and recognize the participants and stakeholders in the project under the Fernald Federal Facilities Agreement. The master plan for the project was established recognizing the interfaces and coordination necessary to satisfy site needs and commitments. The pre-planning and close coordination of project services with site commitments proved very effective in minimizing stops and starts and promoting project integration and efficiency.

CONCLUSION

We believe that the Fernald Mixed Waste Stabilization Project demonstrates that technically challenging mixed waste treatment projects can be successfully performed on DOE sites, within the DOE culture, by small business commercial waste treatment contractors. To be successful, the small business team must combine extensive waste treatment knowledge and experience with DOE site know-how. The successful small business team must be willing to adapt to the formalized operational environment of a DOE site, while the site prime contractor and DOE site office must recognize and capitalize on the innovative approaches from the commercial sector.

This project has shown that stabilization/solidification processes have many performance advantages over competing technologies when dealing with waste streams having highly variable chemical and physical properties, such as DOE site legacy mixed wastes. This project has provided evidence that waste volume increases commonly attributed to cement-based waste stabilization processes are greatly exaggerated. Waste management planning decisions based on assumptions of 100 to 200 percent swell should be critically reviewed. DOE may be able to greatly reduce final treatment costs and speed up legacy waste treatment and disposal schedules by taking advantage of this inexpensive and proven technology.

For highly variable wastes, the judgment of properly trained, supervised, and experienced operators can be a better recipe for success than multi-million dollar automated machines.

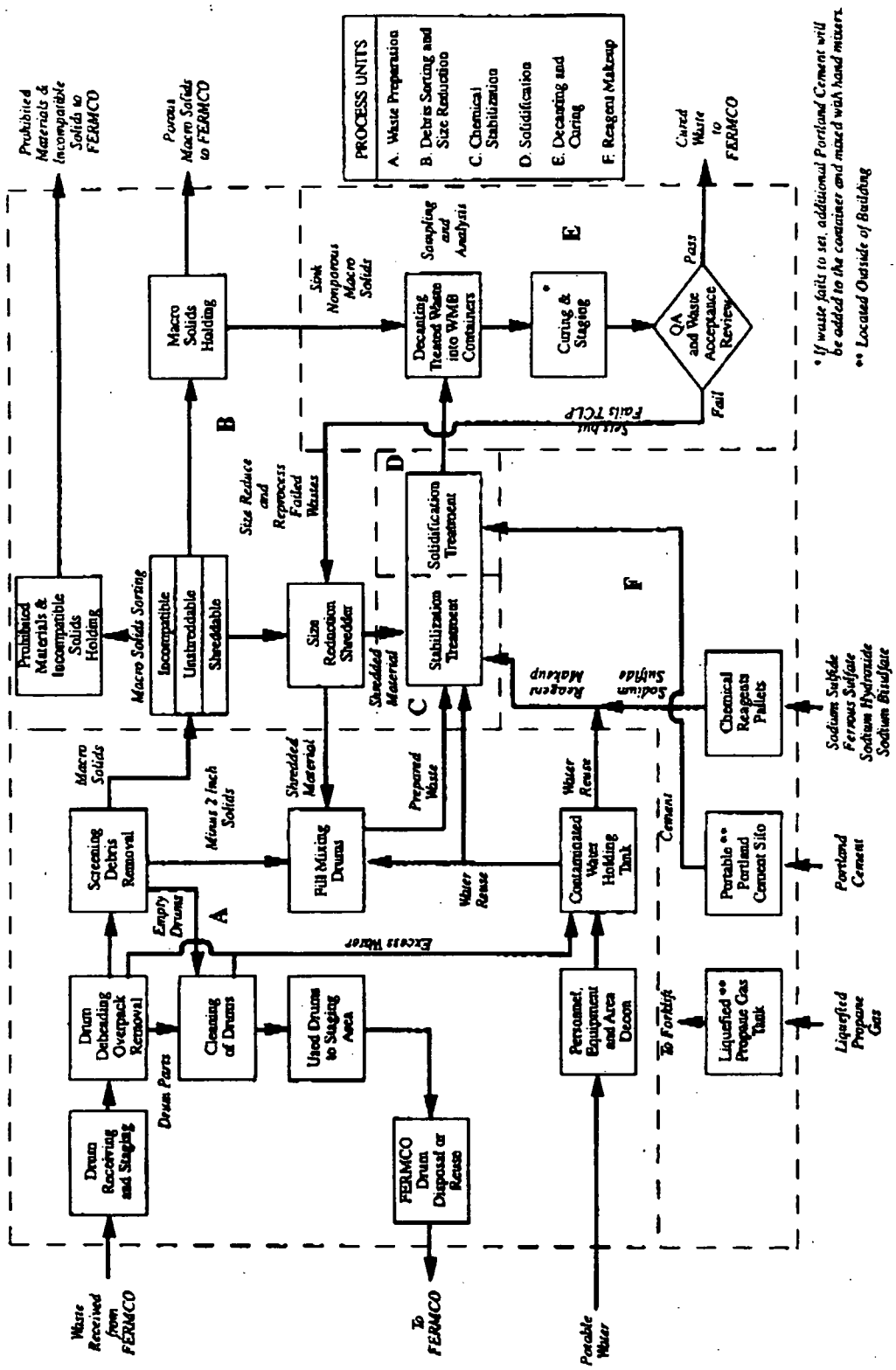

Block Flow Diagram - Mixed Waste Stabilization Process
Figure 1
Process Block Diagram

8

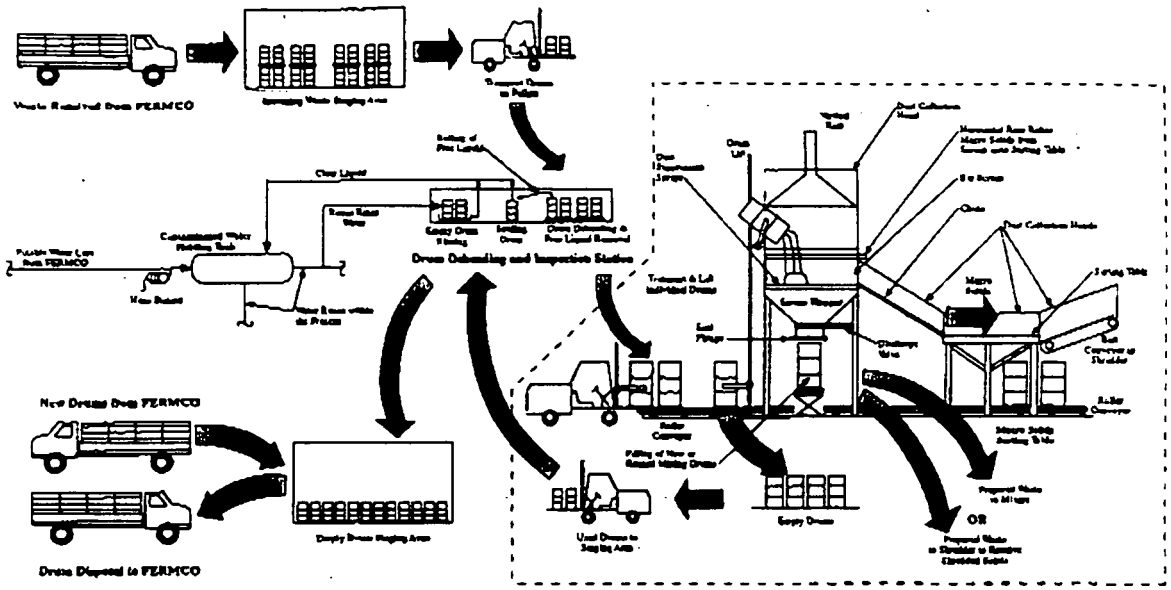

Waste Preparation Process

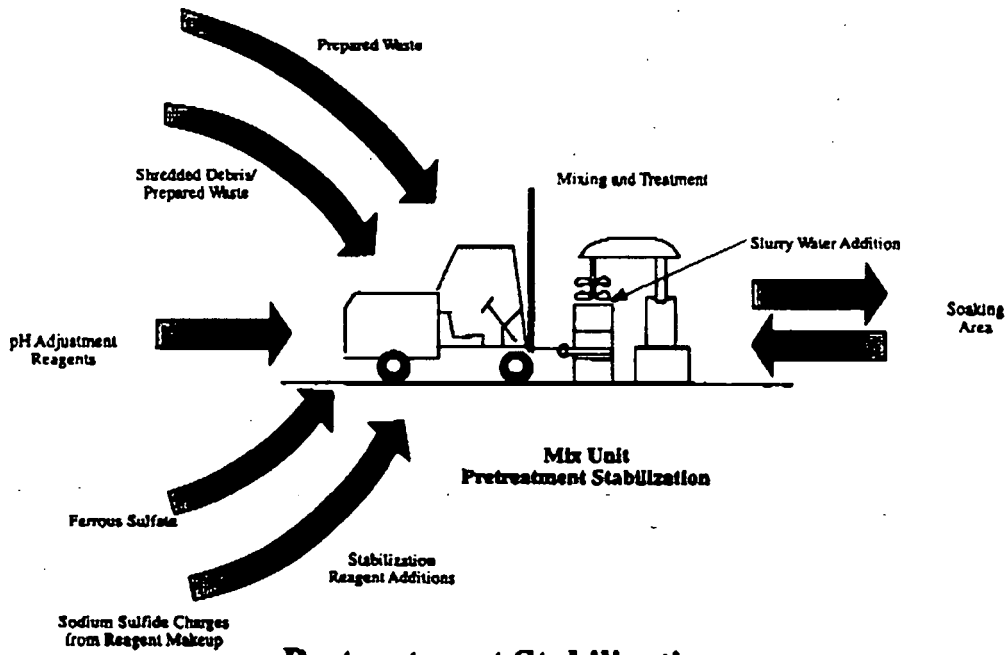

Pretreatment Stabilization
Figure 2
Simple Process Schematic

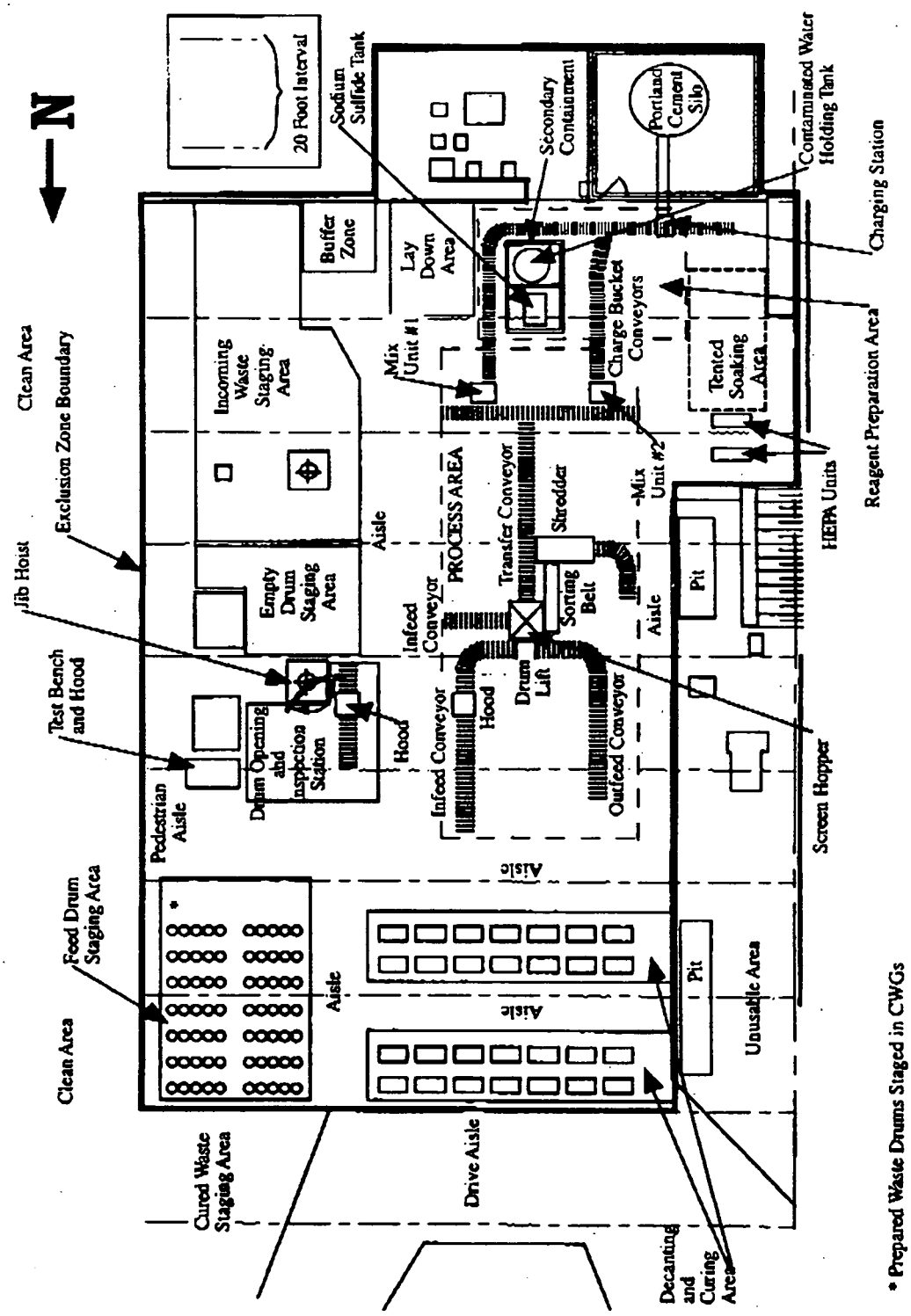

Mixed Waste Stabilization Project
Plant 6 Equipment Layout
Figure 3
Fernald Plant 6 Layout of Mobile Treatment Unit