627

4-406.~~11~~ 9

SILO PROJECT INDEPENDENT REVIEW TEAM DOCUMENTATION - VITPP RELILABILITY, AVAILABILITY, & MAINTAINABILITY (RAM) SIMULATION ANALYSIS PHASE 1 (1 MT/D)

08/19/96

DOE-FEMP
25
REPORT

VITPP
RELIABILITY, AVAILABILITY, & MAINTAINABILITY (RAM) SIMULATION ANALYSIS

PHASE 1 (1 MT/D)

Fernald Environmental
FERMCO
Restoration Management Corporation

August 19, 1996

U.S. GOVERNMENT PROPERTY
DO NOT REMOVE

Fernald Environment Management Project
Fernald, OH

ABSTRACT

The VITPP Upgrade Study is evaluating the feasibility of converting the existing 1 metric ton per day Vitrification Pilot Plant (VITPP) into a long-term production facility in order to vitrify all of the residues in the K-65 silos. A simulation analysis was performed on existing configuration of the VITPP the to evaluate its reliability, availability, and maintainability as a production facility. The analysis modeled the operation of major systems and components using AT&T ISTEL's Witness® simulation software. Estimates of mean time between failure (reliability) and mean time to repair (maintainability) were made for components that could cause a reduction or suspension of glass production. The analysis software, using the above estimates and a functional description of the process systems, determined the total operating efficiency (availability) of the pilot plant on a monthly and cumulative basis over an eight year period.

EXECUTIVE SUMMARY

The current baseline for final remediation of the residues stored in Silos 1, 2, and 3 is vitrification in the Fernald Residues Vitrification Plant (FRVP). The FRVP is scheduled to begin operation in the year 2000 and complete its mission by the end of 2003. The estimated capital cost for FRVP is near $100 million and the estimated total life cycle cost is near $200 million. To gain information specific to vitrifying the silo residues, a 1 metric ton (1000 kg) per day (MT/d) Vitrification Pilot Plant (VITPP) has been built.

A potentially less expensive alternative to building the FRVP is being evaluated by the VITPP Upgrade Study. This alternative consists of providing an alternative stabilization method for Silo 3 residues; increasing the capacity of the VITPP to the maximum extent possible (between 4.5 and 6 tonnes/day); building a second, parallel plant of near equal capacity; and operating both through 2003 to vitrify Silos 1 and 2 residues. This alternative poses some unique challenges in that the VITPP was designed to operate for only a short time and process only a small amount of radioactive waste.

The purpose of this analysis is to estimate the reliability, availability, and maintainability of the VITPP. This evaluation is necessary to identify the bottlenecks and/or weak links in the design in order to determine the changes required to upgrade the facility from a pilot plant to a production plant.

The results of this analysis show that the monthly average availability is around 80 percent. Every three years or so, the melter refractory must be replaced which requires a two month extended outage. Factoring this outage into the simulation, the cumulative availability is approximately 75 percent.

The model assumes that the VITPP has completed its pilot plant duties, has not been upgraded to 6 MT/d, and is operating as a 1 MT/d production plant. This means that plant shakedown has been completed and all items not "fit for duty", by nature of their design or materials of construction, have been replaced, and that appropriate weather protection has been provided for installed instrumentation. The model also assumes the immediate availability of spare parts, operators, and maintenance personnel to perform all necessary repair or replacement tasks. As a result of these assumptions, the calculated availability is higher than that expected during either Phase I or Phase II pilot plant testing.

Table of Contents

ABSTRACT i

EXECUTIVE SUMMARY ii

1.0 INTRODUCTION 1
- 1.1 Background 1
- 1.2 Purpose 1
- 1.3 Methodology 2

2.0 RESULTS 3

3.0 MODELING CRITERIA AND ASSUMPTIONS 10
- 3.1 General 10
- 3.2 Mean Time Between Failures 10
- 3.3 Mean Time To Repair 11
- 3.4 Combined Equipment 11
- 3.5 Fit For Duty 11
- 3.6 Availability of Spares and Personnel 12
- 3.7 Other Events 12

4.0 SIMULATION MODEL 13
- 4.1 General 13
- 4.2 Thickener 13
- 4.3 Additive Bin 15
- 4.4 Slurry Tanks 15
- 4.5 Melter 15
- 4.6 Melter Off-Gas System Equipment 16

List of Tables

Table 1: VITPP RAM Analysis Equipment Failure Rates and Repair Times 5
Table 2: VITPP RAM Analysis Equipment Not Modeled 8

List of Figures

Figure 1: VITPP Availability 4
Figure 2: VITPP Process Flow Diagram 14

1.0 INTRODUCTION

1.1 Background

The current baseline for final remedial design of Operable Unit 4 (OU-4) at the Fernald Environmental Management Project includes removal and treatment of residues stored in silos 1, 2, and 3. The treatment technology selected for stabilizing the silos' contents is vitrification. The final product is currently planned to be borosilicate glass gems, which are flattened spheres 1 to 2 cm in diameter by approximately 0.5 cm thick.

A Vitrification Pilot Plant (VITPP) using a Duratek melter with a nominal capacity of 1 metric ton of glass per day (MT/d) is operational. Phase I (non-radioactive) operation began in June 1996. Phase II (radioactive) operation is scheduled to begin in July 1997 and end in October 1997. The purpose of the VITPP is to gain information on vitrifying the silo residues for use in designing the Fernald Residues Vitrification Plant (FRVP).

Reliability, Availability, and Maintainability (RAM) analyses can be a valuable tool during the design of a facility. Reliability is a component by component estimation of the number and types of breakdowns that are expected to occur during operation of the plant. Availability is the amount of product actually produced in a given time period divided by the amount of product that could have been produced if the plant operated at 100 percent capacity during that same time period. Maintainability is an evaluation of the time required to repair failed plant equipment. Factors such as radioactive contamination, spare parts availability, and accessability are considered in determining maintainability.

1.2 Purpose

The FRVP is scheduled to begin operation in the year 2000 and complete its mission by the end of 2003. The estimated capital cost for FRVP is near $100 million and the estimated total life cycle cost is near $200 million. A potentially less expensive alternative to building the FRVP is being evaluated in the VITPP Upgrade Study. This alternative consists of increasing the capacity of the VITPP to the maximum extent possible (between 4.5 and 6 MT/d) and building a second, parallel plant of near equal capacity, and operating both through 2003. This alternative poses some problematical concerns in that the VITPP was only designed to operate for a short time then be dismantled.

The purpose of this analysis is to evaluate the reliability, availability, and maintainability of the VITPP. This evaluation is necessary to identify the bottlenecks and/or weak links in the design in order to determine the changes required to upgrade the facility from a pilot plant to a long-term production plant.

1.3 Methodology

The first step in preparing the simulation model is to develop the logic that describes material flow throughout the facility. This logic also contains operating rules, processing rates, and parameters such as storage capacity and standby times. Next, all equipment whose failure will have an impact on plant performance is identified, and estimates of failure rates and repair times are made. The simulation model is then built on this information using the WITNESS® simulation software. WITNESS provides an interactive environment to permit quick model development, debugging, and analysis of dynamic systems. Graphics are used to show liquid flows and the status of all equipment modeled.

The WITNESS model depicts the major operations including feed preparation and melter feed, vitrification, and melter off-gas systems. Within each of these systems, major equipment having a production impact due to failure is included. Further, the model addresses tank standby times and storage. Standby time is important because it can mitigate the impact of equipment failures on production by allowing time for restoration before production is lost.

After developing the model, the failure and repair times were applied to the equipment. The Mean-Time-Between-Failure (MTBF) data assumes that equipment items operate on a continuous basis. This is reflected in the model by allowing equipment to fail on calendar time versus operating time. This means items such as flow valves, which only operate intermittently, can fail (or plug-up) without actually being in use: something that can, and occasionally does, happen in real life.

In order to characterize the equipment failure-restoration process, the model uses Mean-Time-Between-Failure (MTBF) and Mean-Time-to-Restore (MTTR) values for all equipment. Both historical data bases and FERMCO operating experience were used as the basis for the MTBF values. An exponential distribution was used to simulate equipment failures on a random basis.

Component restore times were developed by using a maintenance functional analysis approach in conjunction with the FERMCO maintenance department. This analysis itemized the steps involved with the restoration of each equipment item included in the model. Restoration times and sequencing criteria were applied to determine the overall MTTR values for each item.

The RAM Analysis Report will be published in two parts. This first part evaluates the VITPP in its 1 MT/d configuration. The second part will evaluate the upgraded plant in its 4.5 to 6 MT/d configuration.

2.0 RESULTS

The average availability per month for an eight year span of operation is shown in Figure 1. Eight years was chosen because of limitations in the computer program. WITNESS can only store the last 100 data points, and since monthly average availability values were computed, 100 months is 8.3 years. As can be seen, monthly availabilities normally vary between 75 and 90 percent with an average of around 80 percent. Every three years or so the melter refractory must be replaced which causes a two month extended outage. Factoring this into the simulation the cumulative availability is approximately 75 percent.

Estimates of the failure rates, MTBF, and repair times, MTTR, for the equipment modeled in this analysis are shown on Table 1. Equipment not modeled is presented in Table 2.

This model assumes that the VITPP as operating as a production plant. In that capacity, there are no programmatic shutdowns for test changeouts included. It also assumes that plant shakedown has been completed and all items not fit for duty, either because of design or materials of construction, have been replaced, and that appropriate weather protection has been provided for all instrumentation. As a result of these assumptions the calculated availability is higher than that expected during both Phase I and Phase II pilot plant testing.

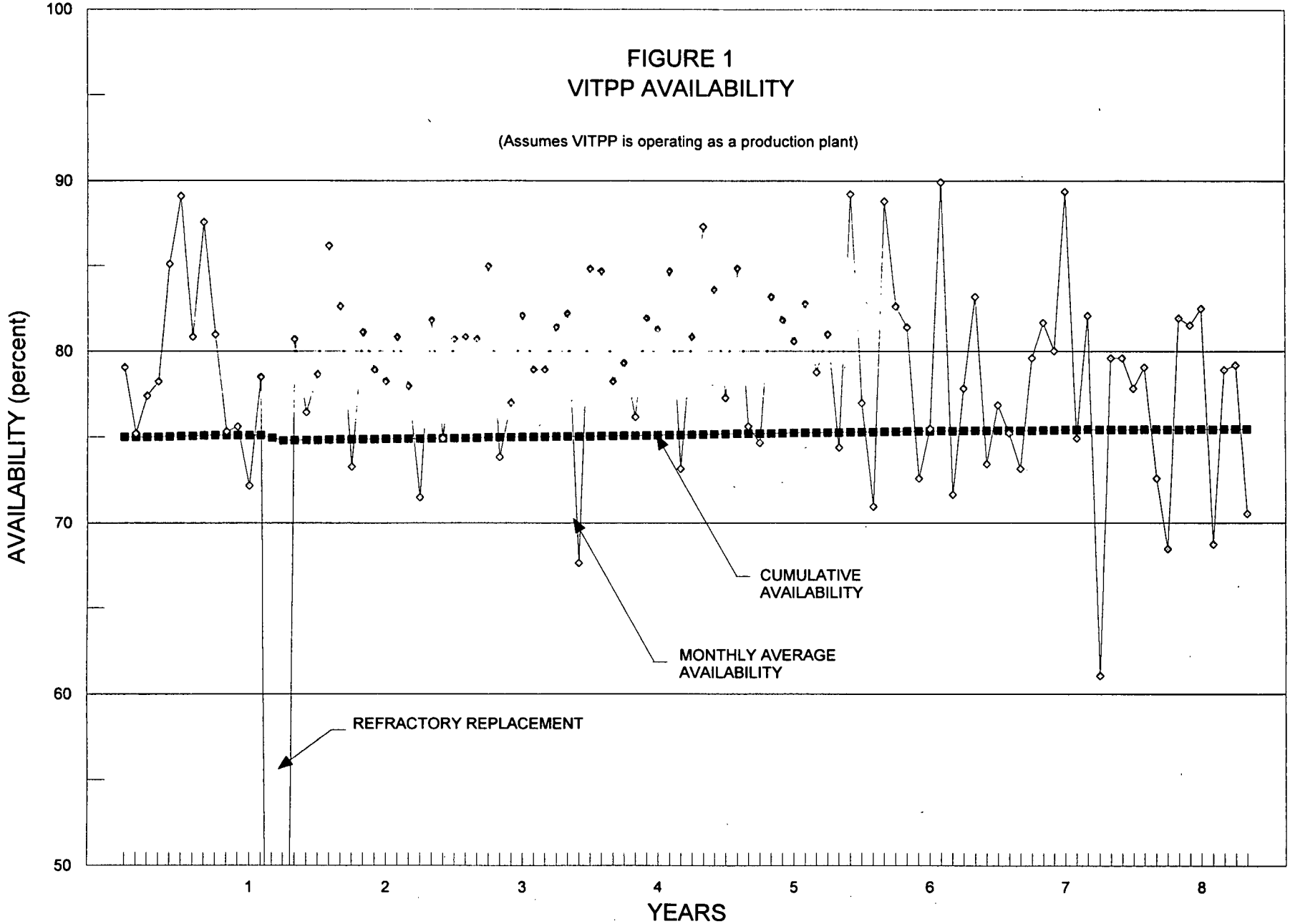
FIGURE 1
VITPP AVAILABILITY
(Assumes VITPP is operating as a production plant)
AVAILABILITY (percent)
100
90
80
70
60
50
1
2
3
4
5
6
7
8
YEARS
CUMULATIVE AVAILABILITY
MONTHLY AVERAGE AVAILABILITY
REFRACTORY REPLACEMENT

Table 1: VITPP RAM Analysis Equipment Failure Rates and Repair Times

Tag No.	Item	MTBF (Hrs)	Diag. (Hrs)	Admin (Hrs)	Prep. (Hrs)	Replace (Hrs)	Test (Hrs)	MTTR (Hrs)	Ref.	Comments[5]
FEED PREPARATION SYSTEM COMPONENTS										
5-TH-2	Thickener Rake	21,900	2/2/2	3/8/3	4/8/4	8/12/8	2/2/1	26	2	Composite of motor / gearbox / coupling
FV-XXX	Thickener Control Valves 024, 047, 048, 290, 291	8,200	2	6	8	6	2	24	1	MTBF = 41,000 each valve. Single composite valve modeled at MTBF = 8,200.
5-RV-71	Glass Former Rotary Feeder	9,000	4/4	3/3	8/4	8/4	2/2	24	2	Composite of feeder / motor
5-AG-05A,B	Slurry Tank Agitators	21,900	2/2/2	3/8/3	4/8/4	8/12/8	2/2/1	26	2	Composite of motor / gearbox / coupling
5-PM-04A,B	Slurry Tank Pumps	1460/ 2380	2/2	6/6	8/8	8/6	2/2	26/24	3	Replace valves every 1460 hours. Replace air side equip every 2380 hours.
FV-296, 298, 348	Slurry Tank A Valves	13,667	2	6	8	6	2	24	1	Composite of 3 valves at 41,000 hrs MTBF each.
FV-292, 299, 347	Slurry Tank B Valves	13,667	2	6	8	6	2	24	1	Composite of 3 valves at 41,000 hrs MTBF each.
FV-179	Melter Feed Valve	41,000	2	6	8	6	2	24	1	
NA	Misc Slurry System Operation	168	-	-	-	-	-	8	3	Estimate 1 shift per week downtime for misc upsets.
NA	Misc Slurry System Failures	730	-	-	-	-	-	16	3	Estimate 2 shifts per month for misc. failures.
MELTER SYSTEM COMPONENTS										
5-PM-17	Melter Feed Pump	19,700	2/3	6/4	4/4	4/4	2/2	18	2	Composite of pump / motor.
5-PM-17	Melter Feed Pump	1,500	0	0	0	1.5	.5	2	4	Replace stator and rotor every 1500 hours.
NA	Melter Electrodes	730	2	0	0	4	0	6	2	Routine insertion every 5 months for each of 5 pair.
SCR #1	Electrode SCR Controller	70,000	4	3	2	8	4	21	3	

000009

627

Table 1: VITPP RAM Analysis Equipment Failure Rates and Repair Times

Tag No.	Item	MTBF (Hrs)	Diag. (Hrs)	Admin (Hrs)	Prep. (Hrs)	Replace (Hrs)	Test (Hrs)	MTTR (Hrs)	Ref.	Comments[5]
NA	Discharge Chamber Heaters	35,000	2	8	4	4	0	18	3	
SCR #2	Discharge Chamber Heaters SCR Controller	70,000	4	3	2	8	4	21	3	
NA	Melter Refractory	26,280	-	-	-	-	-	1460	3	Estimate refractory life to be 3 years with 2 months to replace.
NA	Melter Closed Loop Cooling Water System Radiator Fan	33,333	2/2	3/3	4/4	4/4	2/2	15	1	Composite of fan / motor.
	Diverter Valves	730	0	0	2	5	1	8	3	Planned maintenance.
NA	Miscellaneous Melter Operation	24	-	-	-	-	-	1	3	Estimate 1 hour per day downtime for misc adjustments
NA	Miscellaneous Melter Failures	168	-	-	-	-	-	8	3	Estimate one shift per week for misc. failures.
OFF-GAS SYSTEM COMPONENTS										
5-SB-7	Quench Tower	4,380	2	2	4	6	2	16	3	Replace spray nozzles.
5-HE-27	Quench Tower Heat Exchanger	175,200	2	8	8	16	2	36	2	
5-PM-28	Cooling Tower Pump	19,700	2/2	3/3	2/2	8/4	2/2	16	2	Composite of pump / motor.
5-DH-21	Desiccant Tower	648	2	0	0	24	0	26	3	Desiccant must be replaced every 27 days.
FCV-250, FCV-070, LCV-070	Off-Gas Control Valves	13,600	2	6	8	6	2	24	1	MTBF = 41,000 each valve. Single composite valve modeled with an MTBF = 13,600.
5-FA-25	Exhaust Fan	24,000	2/2	6/3	2/2	8/4	2/2	18	1, 2	Composite of fan / motor.
5-FA-38	Emergency Off-Gas Fan	24,000	2/2	3/3	4/4	8/4	2/2	18	1, 2	Composite of fan / motor.

000010

627

Table 1: VITPP RAM Analysis Equipment Failure Rates and Repair Times

Tag No.	Item	MTBF (Hrs)	Diag. (Hrs)	Admin (Hrs)	Prep. (Hrs)	Replace (Hrs)	Test (Hrs)	MTTR (Hrs)	Ref.	Comments[5]
NA	Misc. Off-Gas System Operation	168	-	-	-	-	-	8	3	Estimate 1 shift per week downtime for misc upsets.
NA	Misc. Off-Gas System Failures	730	-	-	-	-	-	16	3	Estimate 2 shifts per month for misc. failures.

Reference:

1. From EG&G-SSRE-8875
2. FERMCO Maintenance concurrence with HWVP estimate
3. Engineering estimate
4. Vendor estimate
5. See Section 3.4 for calculational method to determine composite MTBF and MTTR times.

Legend:

MTBF	Mean Time Between Failure
Diag.	Time required to diagnose the problem
Admin.	Time required to process the required paperwork such as a Work Request/Order and Radiation Work Permit
Prep.	Time required to prepare for the work such as surveying the area, building contamination barriers, and obtaining spare parts.
Replace	Time required to perform the work, including cleanup afterwards.
Test	Time required to ensure that the repaired or replaced equipment operates properly.
MTTR	Mean Time To Repair. The sum of Diag, Admin, Prep, Replace, and Test.

000011

Table 2: VITPP RAM Analysis Equipment Not Modeled

Tag No.	Item	Justification for Not Including the Item
FEED PREPARATION SYSTEM COMPONENTS		
FV- 026, 171, 297	Recycle Water Flush Valves	These valves can be manually overridden in the event of a failure.
	Flocculent Make-Up Tank Agitator	Flocculent is added less than one hour per day such that this agitator can be repaired before it impacts plant production.
	Flocculent Make-Up Tank Pump	Flocculent is added less than one hour per day such that this pump can be repaired before it impacts plant production.
5-BG-64	Bag Dump Station	The only moving part is the exhaust fan. Glass formers can be added without the use of this fan, although added safety precautions would have to be taken. There would be no impact on production due to a loss of this fan.
5-SC-72	Platform Scale	Glass formers are added less than one hour per day such that an alternative scale could be obtained before plant production is impacted.
5-DC-65	Additive Filter/Receiver	Filter clogging is the only credible failure mechanism in this piece of equipment. Glass formers are added less than one hour per day such that this problem could be corrected before it impacts plant production.
5-VL-18	Diverter Valve	This valve can be manually overridden if it fails.
5-VL-73	Diverter Valve	This valve is only used for Silo 3 Residues.
5-VL-75	Diverter Valve	This valve is only used for Silo 3 Residues.
5-BL-66	Vacuum Blower	Glass formers are added less than one hour per day such that this blower could be repaired before it impacts plant production.
NA	HEPA Filter	Glass formers are added less than one hour per day such that this filter element could be replaced before it impacts plant production.
NA	Silos 1 & 2 Residue Removal System	Since this system normally operates only one shift per day, equipment failures can be repaired and back shift operation utilized so that there will be no impact on production. Each silo is independent and capable of supplying the total feed requirements of the VITPP.
NA	New Radon Treatment System	The system will be redundant as necessary to support continuous operation.
MELTER SYSTEM COMPONENTS		

000012

627

Table 2: VITPP RAM Analysis Equipment Not Modeled

Tag No.	Item	Justification for Not Including the Item
5-BF-24	Gem Maker	Monolith is available as a short term backup in the event of a failure of any Gem Maker component.
5-PM-51& 52	Radiator Cooler Pumps	These pumps are redundant. If one fails the other can maintain plant operation.
5-CM-44 & 45	Plant Air System	Accumulators are provided for short term lag storage. Multiple air compressors are available to maintain glass production for an interim period, although some non-critical users may need to be cut off.
NA	Melter Thermocouples	Sufficient redundancy exists to allow continued operation while an element is being replaced.
MELTER OFF-GAS SYSTEM		
5-SB-22	Venturi Scrubber	No moving parts to fail.
5-RN-19A/B	Carbon Beds	No moving parts to fail.
5-XS-20	Exhaust Stack	No moving parts to fail.
5-PM-23A/B	Quench Tower Pumps	These pumps are redundant. If one fails the other can maintain plant operation.
Pump #1 and #2	Scrubber Recirculating Pumps	These pumps are redundant. If one fails the other can maintain plant operation.
5-PM-60	Caustic Metering Pump	Caustic is added less than one hour per day such that this pump can be repaired before it impacts plant production.
AT-190, 191	Process Radon Monitors	It is assumed that spares will be on hand, that these monitors can be replaced within one shift, and that the regulatory agencies will approve of continued operation during this changeout period.
AT-250	Stack Monitor	It is assumed that a spare monitor will be on hand, that this monitor can be replaced within one shift, and that the regulatory agencies will approve of continued operation during this changeout period.
XX-252	Isokinetic Air Sampling System	It is assumed that spares will be on hand, that this system can be repaired within one shift, and that the regulatory agencies will approve of continued operation during this repair period.
5-FL-48A/B	HEPA Filters	These filters are redundant. If one fails the other can maintain plant operation.

000013

627

3.0 MODELING CRITERIA AND ASSUMPTIONS

3.1 General

The model assumes that the VITPP has completed its startup and pilot plant testing operations and is operating as a production plant at the design capacity of 1.0 MT/d. During the startup and testing periods all equipment that may not be appropriate for the service, as a result of either function or materials of construction, have been replaced.

The plant will process residues only from Silos 1 & 2 only; Silo 3 residues will undergo an alternative stabilization and disposal process and therefore its associated equipment is not considered in this analysis. Off-spec gems will be stored for recycle in a future campaign at the end of the plant life. No estimate of the percentage of off-spec gems is made for this study. Off-spec gems are counted the same as acceptable gems for determining availability.

3.2 Mean Time Between Failures

Reliability data for an equipment item is usually expressed as a Failure Rate (FR), *i.e.,* the rate at which failures occur in a given time interval, or as the Mean Time Between Failures (MTBF). The MTBF is based on calendar time. The relationship between the two is:

$$MTBF = \frac{1}{FR}$$

The values for MTBFs used in this analysis were estimated using a variety of sources on equipment in similar environments. MTBFs are generally the arithmetic average of operating times of a component from the time it is placed in service to the time of the next subsequent failure. It may also be derived from published failure rates.

Multiple data sources for failure rates were used. They included:

EG&G, "Generic Component Failure Data Base", Jan. 1993 - This is an update of EGG-SSRE-8875 (1990). EGG-SSRE-8875, in turn superseded NUREG CR-2728 (IREP) and EGG-EA-5887. Contains recent failure data from nuclear power facilities in the United States. In choosing the recommended composite value, the quality of the original source was considered.

IEEE-500, "Reliability Data", 1984 - Expert opinion and data from nuclear power plants.

Fluor Daniel, "Total Operating Efficiency Evaluation / Simulation Study", April 1993 - A RAM analysis performed for the Hanford Waste Vitrification Plant Project.

Informal conferences with FERMCO maintenance department - Several meetings were held with Joe Legge et. al. to obtain input on Fernald operating experience.

3.3 Mean Time To Repair

The Mean Time To Repair (MTTR) is the total time that it takes to restore a component to service after a failure is discovered. This includes time to diagnose the problem, prepare the work order and obtain approvals to perform the job, survey the work location for radiological and industrial hazards and install temporary protective devices if required, replace the failed component, and finally test the replacement item. MTTR estimates were obtained from the same sources as MTBF estimates.

3.4 Combined Equipment

Some equipment, which consists of multiple components, are modeled as single items. For example, a typical agitator is made up of a motor, gearbox, coupling, and blades, each of which have different MTBFs and MTTRs. The combined $MTBF_c$ and $MTTR_c$ are determined using the following formulas, where A is the availability, subscript c is the combined value, and subscript x is the value for the item in question:

$$\frac{1}{MTBF_c} = \frac{1}{MTBF_1} + \frac{1}{MTBF_2} + \frac{1}{MTBF_3} + \ldots$$

$$MTTR_c = \frac{MTBF_c}{A_c} - MTBF_c$$

$$A_c = A_1 \cdot A_2 \cdot A_3 \cdot \ldots$$

$$A_x = \frac{MTBF_x}{MTBF_x + MTTR_x}$$

3.5 Fit For Duty

It is assumed that all equipment installed is fit for duty. No allowance has been made for repairing or replacing items that are not intended for the service they are performing. This includes materials of construction issues. The underlying assumption here is that the VITPP has completed its pilot plant duties and is now operating a production plant. All "fit for duty" issues such as slurry pump design, slurry pipe routing, film cooler cleaning, desiccant replacement, etc. have been resolved and corrected as necessary.

3.6 Availability of Spares and Personnel

The model assumes sufficient storage space is provided near the VITPP for immediate availability of spare equipment and components. The model also assumes that sufficient operations and maintenance personnel are readily available to perform the necessary tasks.

3.7 Other Events

Natural Disasters, labor disruptions, sabotage, initial facility startup problems, and any FEMP site emergencies are excluded from this evaluation. Gross operator error is also excluded

4.0 SIMULATION MODEL

4.1 General

The basic VITPP residue processing system was modeled to allow calculation of glass production, and therefore availability. The calculated glass production in a given time period is divided by the maximum possible production during that time period [(1 MT/d) X (number of days)] to determine the availability of the plant.

The processing system components (Additive Bin, Thickener, and Slurry Tanks) were modeled as tanks or processors with no failure rates specified. Various pieces of equipment were added to the model whose failure would stop or reduce production in a given component. MTBFs and MTTRs were determined for each of these added equipment. Equipment whose failure would not interrupt production, or which has a redundant backup are considered irrelevant to availability, and were not modeled. Equipment with no moving parts, and thus, no identified failure mode other than structural failure were not modeled. Simultaneous failures of redundant equipment were not considered.

In order to allow all components to reach equilibrium and obtain accurate results from the model, AT&T ISTEL recommends that the simulation time be run for several times longer than the maximum MTBF of any component. The longest MTBF in this model is 175,200 hours (20 years) for the Quench Tower Heat Exchanger. A run length of 400,000 hours (45 years) was chosen. Figure 1 represents the last 8 years of that time period.

Figure 2 presents a basic flow diagram of the VITPP highlighting the processors and equipment modeled. As can be seen, the majority of the VITPP equipment, instrumentation, and controls are not included in the model. To account for these missing items, and for other system failures such as line pluggages, two "generic" pieces of equipment were added to the model. These are titled Misc Slurry System and Misc Off-Gas System. Failures of 1 shift per week for operational upsets and 2 shifts per month for miscellaneous equipment failures were assigned to each of these two items.

The Thickener receives residues from Silos 1 and 2 as a slurry containing approximately 7.5 percent solids. Flocculent is added and the solids content is increased to 50 percent by decanting off the excess water. The slurry is then transferred to one of two Slurry Tanks where it is sampled and the appropriate glass formers added. The slurry is then fed to the melter where glass is produced. The following sections describe how these components are modeled.

4.2 Thickener

Since the Residue Retrieval System is not modeled, the Thickener is modeled as a tank containing ten times the actual amount of solids in Silos 1 and 2. Ten times was selected to ensure that this modeling element would not "run dry" during the 45 year simulation period. The Thickener provides feed to the Slurry Tanks.

627

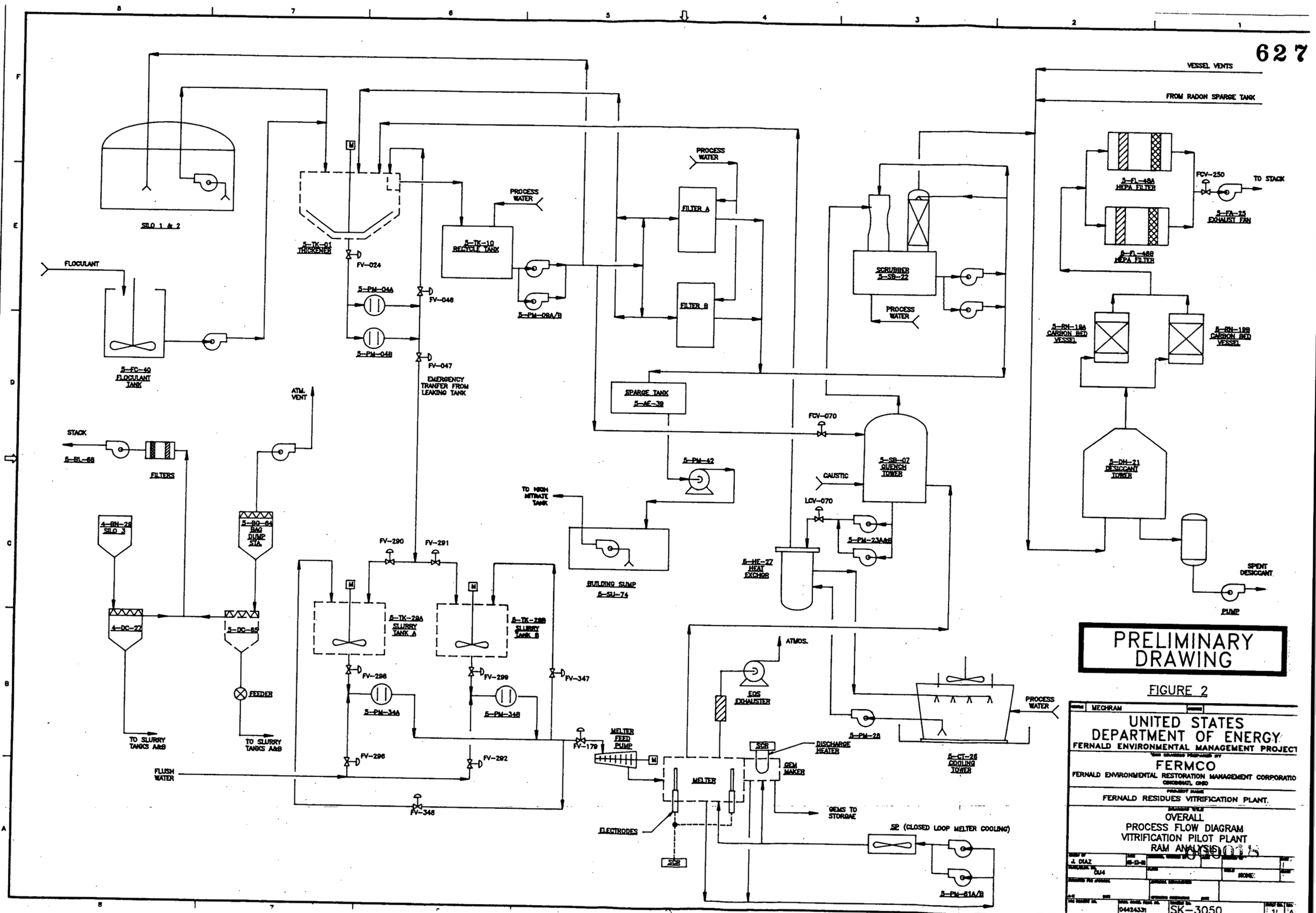
VESSEL VENTS
FROM RADON SPARGE TANK
SILO 1 & 2
5-TK-01 THICKENER
FV-024
FLOCULANT
5-FC-40 FLOCULANT TANK
5-PM-04A
5-PM-04B
FV-048
FV-047
EMERGENCY TRANFER FROM LEAKING TANK
5-TK-10 RECYCLE TANK
PROCESS WATER
5-PM-09A/B
FILTER A
FILTER B
SPARGE TANK 5-AE-39
SCRUBBER 5-SB-22
5-FI-48A HEPA FILTER
5-FI-48B HEPA FILTER
FCV-250
TO STACK
5-FA-25 EXHAUST FAN
5-RN-19A CARBON BED VESSEL
5-RN-19B CARBON BED VESSEL
5-DH-21 DESICCANT TOWER
SPENT DESICCANT
PUMP
ATM. VENT
STACK
5-FI-68
FILTERS
FCV-070
5-PM-42
5-SB-07 QUENCH TOWER
CAUSTIC
LCV-070
5-PM-23A&B
5-HE-27 HEAT EXCHGR
TO HIGH NITRATE TANK
BUILDING SUMP 5-SU-74
4-RN-28 SILO 3
5-BG-84 BAG DUMP STA
4-DC-22
5-DC-85
FEEDER
TO SLURRY TANKS A&B
TO SLURRY TANKS A&B
FV-290
FV-291
5-TK-29A SLURRY TANK A
5-TK-29B SLURRY TANK B
FV-298
FV-299
FV-347
5-PM-34A
5-PM-34B
FV-296
FV-292
FV-346
FLUSH WATER
FV-179
MELTER FEED PUMP
MELTER
ELECTRODES
SCR
DISCHARGE HEATER
GEM MAKER
GEMS TO STORGAE
ATMOS.
EOS EXHAUSTER
5-PM-28
5-CT-26 COOLING TOWER
PROCESS WATER
SP (CLOSED LOOP MELTER COOLING)
5-PM-61A/B
PRELIMINARY DRAWING
FIGURE 2
MECHRAM
UNITED STATES DEPARTMENT OF ENERGY
FERNALD ENVIRONMENTAL MANAGEMENT PROJECT
FERMCO
FERNALD ENVIRONMENTAL RESTORATION MANAGEMENT CORPORATION
CINCINNATI, OHIO
FERNALD RESIDUES VITRIFICATION PLANT
OVERALL
PROCESS FLOW DIAGRAM
VITRIFICATION PILOT PLANT
RAM ANALYSIS
J. DIAZ
OU4
NONE
04424331
SK-3050
1
A

Failure of the Thickener Rake or any of the five slurry control valves (FV-024 coming out of the thickener, FV-047 between the Thickener and the Slurry Tanks, FV-048 recycling back to the Thickener, and FV-290 and FV-291 leading to the two Slurry Tanks) prevents the thickener from transferring slurry.

4.3 Additive Bin

The Additive Bin receives glass formers measured in the proper proportion from the Bag Dump Station. Since the Bag Dump Station is not modeled, the Additive Bin is also modeled as a tank containing ten times the actual amount of glass formers that will be needed to process all of the silo residues. Ten times was selected to ensure that this modeling element would not "run dry" during the 45 year simulation period. The Additive Bin provides feed to the Slurry Tanks.

Failure of the Rotary Feeder prevents the thickener from transferring glass formers to the Slurry Tanks.

4.4 Slurry Tanks

The two Slurry Tanks are modeled as processors and operate sequentially. During each cycle a Slurry Tank receives 390 gallons of slurry from the Thickener, 35 gallons of glass formers from the Additive Bin, and 90 gallons of water from "the world", a modeling term meaning an infinite source or destination outside the model. After receiving the feed, the processing time is set to 9.5 hours, which accounts for mixing (0.5 hours), sampling (0.5 hours), analyzing (8 hours), and adjusting (0.5 hours). The Slurry Tank then waits until the other Slurry Tank is empty, then begins feeding the Melter at 15.5 gallons per hour. It takes approximately 33 hours to empty a Slurry Tank.

Failure of a Slurry Tank's Agitator, its double diaphragm pump, or any its three associated feed, flush, or recycle valves (FV-298, FV-296, or FV-348 respectively for tank A and FV-299, FV-292, or FV-347 respectively for tank B) prevents transfer of feed to the melter. If the other Slurry Tank is in use or available (i.e., its processing complete) then melter feed continues or is immediately transferred to it. If not, then the melter is idled until the first Slurry Tank is available. If the Melter Feed Valve, FV-179, or the Moyno Melter Feed Pump fails, the Melter is idled until they are repaired. If miscellaneous slurry system operational difficulties arise (such as line plugging) or a miscellaneous system component fails (such as instrumentation) the Melter is idled until they are corrected.

4.5 Melter

The Melter is modeled as a machine that receives feed from the Slurry Tanks and discharges gems to "the world" at the rate of 91.67 pounds per hour (1 MT/d). The Melter has several components that can fail, and thus, cause it to idle. These include the discharge heaters, the electrode and discharge heater SCR Controllers, the diverter valves in the gem machine, and the Closed Loop Cooling Water System Radiator Fan. Miscellaneous operational difficulties such as foaming or control system problems are modeled as 1 hour per day plus 8 hours per week.

The electrodes are consumed during operation. Duratek estimates that each pair will need to be rotated and slightly inserted into the Melter approximately every 5 months. It is expected to take 6 hours per pair for insertion. The refractory is also consumed during operation. It has been estimated by FERMCO that the refractory will have to be replaced approximately every 3 years. FERMCO estimates and GTS Duratek concurs that it will take approximately 2 months to complete a refractory replacement. This assumes that the replacement is a planned event, that new refractory (largely cut to shape) is available in a staging area, and that an experienced subcontractor will perform the work on a three shift per day basis.

4.6 Melter Off-Gas System Equipment

Failures in any of the Melter Off-Gas System equipment modeled will cause the Melter to idle. This includes the Quench Tower Heat Exchanger; the Cooling Tower Pump; control valves FCV-070 feeding the Quench Tower with recycle water, LCV-070 draining the Quench Tower, and FCV-250 regulating the flow of the off-gas to the stack; the exhaust fan; and the Emergency Exhaust Fan.

If a Melter Off-Gas System operational difficulty arises (such as an off-gas line plugging) or a miscellaneous system component (such as instrumentation) fails, the Melter is idled until they are corrected. Finally, the desiccant in the Desiccant Tower must be replaced every 27 days, which requires the melter to be idled for about a day.