628

4-406.~~12~~
10

SILO PROJECT INDEPENDENT REVIEW TEAM DOCUMENTATION - OPERABLE UNIT 4 VITRIFICATION PILOT PLANT FAILURE MODES EVALUATION ANALYSIS

08/19/96

DOE-FEMP
110
REPORT

OPERABLE UNIT 4
VITRIFICATION PILOT PLANT
FAILURE MODES EVALUATION ANALYSIS

Fernald Environmental
FERMCO
Restoration Management Corporation

August 19, 1996

U.S. GOVERNMENT PROPERTY
DO NOT REMOVE

Fernald Environment Management Project
Fernald, OH

Systems Manager: John L. Smets

Task Leader: Bob Bromm

Contributing Authors: Bob Bromm
Pat Earley
Brent Johnson
Richard Lowery
Jack Reisdorf

ABSTRACT

Prior to operation of the VITPP facility, Failure Modes and Effects Analyses (FMEA) are used to catalog failure modes of equipment and their effects on a system or plant. Failure modes describe how failures occur, and the effect of each failure mode is determined by the system's response to that failure. The FMEA provides a qualitative review of the VITPP availability and safety characteristics. FMEA identifies credible equipment and system failures that could create an unsafe condition or initiate an outage, and recommends a corrective course of action. Additionally, FMEA provides a basis for the quantitative availability analysis.

EXECUTIVE SUMMARY

The Failure Modes and Effects Analyses (FMEA) analysis performed for this study is limited to VITPP systems and the Phase II normal operating mode. These systems include the Dewatering, Feed Preparation, Additive Transfer, Melter, Waste Water Treatment, Radon Removal, Off-gas Treatment, Off-gas Air, Emergency Off-gas Treatment, Process Cooling Water, and Compressed Air systems.

The FMEA is performed to identify the effects of single equipment and system failures and provide a qualitative review of the VITPP availability and safety characteristics. The results of a FMEA are used as a basis to evaluate the current technical baseline configuration and recommend appropriate actions. The following paragraphs summarize the FMEA analysis for the VITPP.

The following items are considered "to be important actions" to the current VITPP configuration, as determined by the FMEA. These items are listed by system.

Feed Preparation System

1. A low melter feed rate alarm (control room) is recommended to permit operators a quick response to a melter feed valve (FV-170) failure to open condition.

Melter System

1. Add interlock to shutdown melter feed pump (5-PM-17C) on local high pressure alarm (PSH-174) to protect melter feed pump from plugged discharge line condition or inadvertent closure of melter feed pump isolation valves. Provide control room alarm from local high pressure signal.

2. Add control room high cooling water temperature alarm to permit operators a quick response to a loss of air flow condition of the closed loop radiator cooling fan.

3. Install a pressure relief device on the cooling loop side of V-513 to permit relief of system pressure of the closed loop cooling water system in the event of inadvertent closure of manual valve V-513.

4. Place PIT-540, PIR-540 and interposing relay on critical proof testing schedule to ensure proper operation of these components (for proper activation of the emergency "once through" cooling water system). Additionally, modify FS-002 signal to provide a low flow alarm in the control room to monitor the flow of the emergency "once through" cooling water system (as well as the closed loop cooling water system).

5. Add an interlock to shutdown the radiator cooling pump(s) upon activation of the emergency "once through" cooling water system.

6. Add a parallel air supply line (with pressure regulator) to the main chamber bubblers to improve system reliability and to permit maintenance on UA-R001.

7. Provide administrative control features to lock open manual valves UA-V002, UA-V001 and V-1006 to prevent inadvertent closure (loss of air supply to main chamber bubblers) of any of these valves.

8. Add a parallel air supply line (with pressure regulator) to the lift chamber bubbler to improve system reliability and to permit maintenance on UA-R002.

Off-gas Treatment System

1. Consider adding a bypass on FCV-070.

2. Add a high flow alarm on FIC-070 to alert control room operators in the event the quench tower inlet water valve (FCV-070) fails open.

3. Add block and bypass on the quench tower outlet control valve (LCV-070) in the event LCV-070 fails closed.

Off-gas Air System

1. Add a fire suppression system to the Carbon Bed system. Add CO/CO_2 detector alarms (to detect oxidation) at the Carbon Bed discharge .

2. Provide administrative control features to control the use of manual valve V-557 after Phase 1 operations.

Emergency Off-gas System

1. Provide administrative control features to lock open inlet manual valves V-OG-1288 and OG-104 to prevent inadvertent closure (after testing or maintenance) and the inability to open FV-370/360 upon demand (FV-370 permits Emergency Off-gas System response to melter high pressure condition).

2. Provide means to drain liquids accumulated in pressure taps PDAH-171 and PDAH-250.

3. Provide a low pressure alarm to alert control room operators of an exhaust fan failure.

The following items are "to be considered actions" in the current VITPP configuration, as determined by the FMEA. These items are listed by system.

Dewatering System

1. Consider adding low flow detection device when the residue slurry pumps (PM-04 A/B) are in recycle mode.

Feed Preparation System

1. Consider adding coupling failure indicator to the slurry tank agitators (5-AG-05 A/B) to alert operators of a failure condition.

Melter System

1. Consider providing a local flow indicator on the flush line (before FV-171) to indicate water flow is established during melter feed line flushing activities (to indicate proper valve function, no pluggage in line).

2. Provide administrative control features to control opening the flush line valve, V-SL-098, during non-routine melter feed line flushing activities (in the event of severe pluggage in line).

Radon Removal System

1. Consider adding a manual bypass to solenoid valve (FY-391) to ensure sparge air flow to Radon Sparge Tank for continued radon removal.

Off-gas Treatment System

1. Consider providing an interlock to shutoff quench tower pumps and protect from cavitation during a low quench tower liquid level (signal from LSLL-070).

Off-gas Air System

1. Consider providing a spare Exhaust fan (5-FA-25) to increase availability/ reliability of the Off-gas system.

Process Cooling Water System

1. Consider the addition of a second cooling tower pump to provide increased availability/reliability of the Process Cooling Water system.

Table of Contents

ABSTRACT ii

EXECUTIVE SUMMARY iii

1.0 INTRODUCTION 1
- 1.1 General 1
- 1.2 Purpose, and Need 1
- 1.3 Scope 1
- 1.4 Assumptions 2
- 1.5 Methodology 3

2.0 VITPP REVIEW 5
- 2.1 Dewatering 5
  - 2.1.1 Description 5
  - 2.1.2 Concerns 5
- 2.2 Feed Preparation 6
  - 2.2.1 Description 6
  - 2.2.2 Concerns 6
- 2.3 Additive Transfer 7
  - 2.3.1 Description 7
  - 2.3.2 Concerns 7
- 2.4 Melter System 7
  - 2.4.1 Description 7
  - 2.4.2 Concerns 8
- 2.5 Waste Water Treatment 10
  - 2.5.1 Description 10
  - 2.5.2 Concerns 11
- 2.6 Radon Removal System 11
  - 2.6.1 Description 11
  - 2.6.2 Concerns 12
- 2.7 Off-gas Treatment 12
  - 2.7.1 Description 12
  - 2.7.2 Concerns 14
- 2.8 Off-gas Air 14
  - 2.8.1 Description 14
  - 2.8.2 Concerns 15
- 2.9 Emergency Off-gas Treatment 16
  - 2.9.1 Description 16
  - 2.9.2 Concerns 16
- 2.10 Process Cooling Water 17
  - 2.10.1 Description 17
  - 2.10.2 Concerns 17
- 2.11 Compressed Air 18
  - 2.11.1 Description 18
  - 2.11.2 Concerns 18

3.0 BIBLIOGRAPHY/REFERENCE 19

APPENDIX A, FIGURES A-1

APPENDIX B, WORKSHEETS/FMEA TABLES B-1

1.0 INTRODUCTION

Failure Modes and Effects Analyses[1] (FMEA) is used to catalog failure modes of equipment and their effects on a system or plant. Failure modes describe how failures can occur, and the effect of each failure mode is determined by the system's response to that failure. FMEA identifies single failure modes that either directly result in or contribute to an accident situation or a system shutdown.

1.1 General

Operable Unit 4[2] (OU4) personnel are currently preparing for the third tier of the United States Environmental Protection Agency (USEPA) outlined approach for conducting treatability studies at a Superfund site. The third tier, Remedial Design/Remedial Action (RD/RA), consists of the design, construction, and operation of a one metric ton per day (2,200 lb/day) output pilot scale facility for vitrification of K-65, bentonite, and Silo 3 material. Additionally, waste retrieval from the silos and adequate control of radon gas will also be demonstrated. The third tier will be conducted in phases. Phase I of the OU4 VITPP will use bentonite, surrogate materials, and the pilot scale vitrification facility. Phase II, following Phase I, will use bentonite, K-65 residue, and Silo 3 materials retrieved from the silos. The results of this third tier treatability testing are critical in determining the path forward for the final remediation of OU4.

1.2 Purpose, and Need

Prior to operation of the VITPP facility, a FMEA is performed to identify single equipment and system failure modes and effects. The FMEA provides a qualitative review of the VITPP availability and safety characteristics. FMEA identifies credible equipment and system failures that could create an unsafe condition or initiate an outage, and recommends a corrective course of action. The results of a FMEA are used as a basis to evaluate the current technical baseline configuration.

1.3 Scope

The FMEA analysis is limited to pilot plant systems and Phase II VITPP operations. It includes the Dewatering, Feed Preparation (excluding Silo 3 equipment since it is not planned for use during Phase II), Additive Transfer, Melter, Waste Water Treatment, Radon Removal and Treatment, Off-gas Treatment, Off-gas Air, Emergency Off-gas Treatment, and Process Cooling Water systems. The designation of the systems as noted is based upon referenced P&ID divisions. The Hydraulic Waste Retrieval, Spare Storage Tank, and Waste Removal systems are excluded from the analysis. The analyses is based on the Piping & Instrumentation Diagrams (P&IDs) plus supporting Control Logic Diagrams (both contained in Appendix A).

Operating procedures which discuss step-by-step activities, including human-equipment interface, alarms, and protective system checks, are essential for proper review. Non-normal VITPP operating modes are not investigated in this report. This study focused on the normal operating mode and did not include the following modes of operation:

- Initial installation
- Melter startup
- Melter idle
- Melter restart after upset
- Reduced capacity operation
- Melter shutdown
- Melter decontamination
- Maintenance activities

This study investigated the safety and operability of the VITPP using a systems based approach and a structured FMEA methodology, as described in Section 1.5.

1.4 Assumptions

The FMEA considers the failure of major equipment impacting production such as pumps, control valves, fans, agitators etc as well as critical safety systems (relief valves and emergency shutdown devices). It also includes instrumentation failures which cause an automatic operating state change. For example: A level or flow detection device failure causing control valves to open/close. The analysis excludes:

- The failure of instrumentation which provides only an indication or an alarm. Note: Alarms are included (where applicable) in the "Detection" column of the FMEA worksheet as means of identifying the cause of the failure mode.

- Failures causing a functional loss of non-routine operations which do not directly impact production or safety such as loss of slurry line unplugging equipment. Note: The inadvertent/premature activation of these items and their safety and production impact on the process are considered.

  Under this category, non-routine operating systems such as the Spare Storage Tank and the Waste Removal systems are excluded from the analysis.

- The failure of redundant systems having no safety impact such as Gem production.

- Per Section 9.4.3.5 of the PSAR (FEMP-2337) a leak of the entire Thickener contents into the diked area does not expose the worker or the offsite public to a dose level above the maximum annual allowable (Worker - 1.0, Public - 0.1 Rem). Consequently, safety concerns associated with leaks in the Thickener, Feed Preparation or Recycle water systems are not addressed. Furthermore, operational impacts from minor equipment leaks are not considered because they are assumed to be repaired during a scheduled outage or in the shadow of other equipment repair operations.

- Non-Process related failures causing personnel injury accidents are not considered. Examples of these events include operators contacting rotating machinery, touching exposed electrical or thermally hot surfaces. Plant worker safety guidelines and OSHA regulations are assumed to provide the necessary protection.

- Failures resulting in injuries from maintenance activities are not addressed. Provisions for flushing/draining as well as adequate process isolation and worker safety/OSHA guidelines are assumed to mitigate maintenance related hazards.

- The FMEA considers the effects of failures which originate inside the facility, such as corrosion, wear, and material fatigue. The FMEA does not address events initiated outside the facility, such as earthquakes, plane crashes, severe storms, sabotage, or sub-standard construction (a loss of power event is considered, however).

1.5 Methodology

The FMEA reviews the P&ID drawings to identify failure modes associated with a hazardous condition or a potential outage. It addresses failures of all major equipment and critical safety systems using the FMEA worksheet (Appendix B contains all worksheets and presents them in tables). The FMEA worksheet not only is the primary data collection tool, but it also provides the structure necessary to systematically evaluate the process. The structure is derived through the column headings, which require a logical thought progression in order to assess availability and safety concerns. The worksheet column headings are shown and discussed below.

Column	Description
1	Item/Function
2	Failure Mode
3	Cause
4	Local/System Effect
5	Detection
6	Safeguard
7	Recommendation

Column 1: The FMEA begins with column one by listing the review item's tag number, its name and function. A concise statement of the item's function is important in order to understand its relationship to the overall system and its role in ensuring adequate safety and operability.

Column 2: The second column describes the failure mode or the manner in which the item fails to function. For example, a pump may fail in a manner that it provides inadequate (no) flow or excessive flow.

Column 3: The cause provides the reason for the failure. An instrument air loss may cause a pneumatically operated pump to have "no flow". Alternately an instrument air valve malfunction, allowing high air flow to a pneumatic pump, may cause excessive pump flow.

Column 4: The local or initial failure effect as well as the system or "higher level" effect is indicated in column four. This column evaluates the consequence of the failure mode on the process. Degraded states as well as full outages are noted. Its completion is necessary to establish availability and safety risk.

Column 5: Column five relates how the failure is detected or recognized by an operator under normal system operation or maintenance. Primary instrumentation identification devices are typically noted. If no instrumentation exists, operator inspection is mentioned if applicable.

Column 6: The design safeguard or defense is described in column six. If a backup system, such as a redundant pump exists, it is detailed. If a safeguard is not present, the word "None" is stated.

Column 7: The recommendations to improve system availability and safety discussed in Column seven are provided as non-mandatory suggestions to improve system performance. The recommendations may apply to reducing the likelihood of occurrence of the failure mode and its associated cause(s). The recommendations could also pertain to improving the mitigation system's reliability by the addition of detection instruments or periodic testing of existing devices.

Utilities supporting the main process and redundant systems having no safety impact (such as gem/monolith production) are considered using a top down approach. The top down methodology addresses failure modes related to the loss of the system's function as well as system deviations upsetting the main process. If the failure mode demonstrates a safety or operability concern, it is investigated at the component level. Otherwise, the analysis ends with this system level consideration. For example, with regard to the Additive Transfer system, the loss of the Bag Dump Station Filter Vacuum Blower does not impact production or safety. A local 'tent' can be installed to mitigate a potential dust release. Since no concern is demonstrated, its evaluation is concluded (at the system level) by documenting this fact on the FMEA worksheet.

2.0 VITPP REVIEW

The FMEA analysis is limited to VITPP systems and operations. It includes the evaluation of the following systems: Dewatering, Feed Preparation (excluding Silo 3), Additive Transfer, Melter, Waste Water Treatment, Radon Removal and Treatment, Off-gas Treatment, Off-gas Air, Emergency Off-gas Treatment, Process Cooling Water, and Compressed Air. The Hydraulic Waste Retrieval, Spare Storage Tank, and Waste Removal systems are excluded from the analysis. The analyses is based on the Process Flow Diagrams and supporting Control Logic Diagrams (CLD). Data sources used in the FMEA are identified in Appendix A.

The following sections provide descriptions and concerns for the systems evaluated in this study.

2.1 Dewatering

2.1.1 Description

The Dewatering System (part of Feed Preparation System) is presented on Figure A-1. Figure A-2 presents the CLD used in this evaluation. The Dewatering System is designed to provide a recycled water supply to the Recycle Water Tank.

The VITPP Dewatering System uses a Thickener (5-TK-01) to receive daily transfers of slurried waste from Silo 1 and Silo 2 for up to 6 hours per day, at a rate of 50 gpm. The Thickener feed stream receives a controlled addition of flocculent solution to aid in solids settling. Concurrent with these feed transfers, a partially clarified supernatant spills over a weir inside the Thickener and gravity flows to the Recycle Water Tank. Meanwhile, most of the incoming suspended solids undergo gravity settling to form a sludge layer in the bottom cone of the Thickener. The continuous rotation of the Thickener Rake Mechanism (5-TH-02) pushes the sludge to the outlet connection at the bottom of the inverted cone.

The concentrated Thickener underflow is continuously drawn to the suction of one of the two parallel, air-operated Residue Slurry Pumps (5-PM-04A/B). The pump discharge is normally recycled to the Thickener feed well in order to control the solids content of the bottom sludge layer. The underflow stream is also intermittently transferred forward to one of the two parallel-mounted Slurry Tanks (5-TK-29A/B).

2.1.2 Concerns

Table B.1 describes the results of the FMEA for the Dewatering system. Significant findings include:

<u>Residue Slurry Pump, PM-04 A/B</u>: Pump failure will cause a no flow condition causing loss of slurry transfer from the Thickener to the Slurry Tanks (a redundant pump is provided). Although a low flow alarm is provided on the feed forward line to the Slurry Tanks (FI-290), it is recommended that a low flow indicator be added to detect loss of flow when the pump is in recycle mode.

2.2 Feed Preparation

2.2.1 Description

The Feed Preparation system is presented on Figures A-3,4. Figure A-5 presents the CLD used in this evaluation. The Feed Preparation system is designed to provide a properly formulated melter feed slurry to ensure an acceptable glass product.

The two Slurry Tanks are operated batchwise, on staggered time cycles. A complete operating cycle for either tank consists of a first phase, during which a batch of melter-ready process slurry is prepared, followed by a second phase of equal duration, during which the slurry is continuously fed to the melter by the associated Slurry Tank Pump (5-PM-34A/B). Each time the melter feed function is transferred from one Slurry Tank to another, certain solenoid operated block valves in slurry lines connected to these pumps must change position.

2.2.2 Concerns

Table B.2 describes the results of the FMEA for the Feed Preparation system. Significant findings include:

Slurry Tank Agitator, 5-AG-05 A/B: The loss of an agitator component (e.g., motor, gear box, or coupling failure) will cause a failure to provide a properly formulated slurry. It is recommended that operations discontinue melter feed operations upon indication from XS-051/052 (motor failure indicator).

Slurry Tank Outlet Back Flush Valve, FV-296/292: Inadvertent operation of these valves may result in greater water content in the slurry. The high moisture content of the slurry is then transferred into the melter where it is vaporized (resulting in a pressure excursion). Although indication is provided (ZSH-292) and the EOS will protect the melter system from the pressure excursion, it is recommended that operations discontinue melter feed operations upon indication from ZSH-292.

Slurry Tank Pumps, 5-PM-34 A/B: Failure of the Slurry Tank Pumps due to line blockage or pump failure can result in solids settling in both the piping system and the bottom of the Slurry Tanks (5-TK-29 A/B), provided the slurry level is below the height of the slurry tank agitator (5-AG-05 A/B). Additionally, if the failed pump is providing circulation to the melter feed loop, this will result in loss of feed to the melter. Although local pressure indication is provided (PI-341/343) on the slurry tank recirculation loop, and a low-flow alarm provided to the control room (FI-170) for the melter feed loop (this alarm does not provide any information for the other slurry tank pump in the slurry tank recirculation mode), it is recommended that low-flow alarm(s) be provided to the control room after the discharge of each slurry tank pump to monitor the operation of each slurry tank pump.

Melter Feed Valve, FV-170: Failure of the melter feed valve to open due to loss of instrument air or valve malfunction will prohibit slurry transfer to the melter feed pump. Although methods exist to detect this condition (e.g., decrease in gem production rate, camera view of melter cold cap), these methods do not provide immediate detection

for operator response. It is recommended to provide a low melter feed rate alarm in the control room to allow operators to better respond to this upset condition.

2.3 Additive Transfer

2.3.1 Description

The Additive Transfer system is presented on Figures A-6,7. The Additive Transfer system is designed to provide the required bulk additives to the melter feed preparation process to ensure a properly formulated glass formulation.

Bulk glass former materials are received, staged and sampled as required. Melter feed sampling methods determine the quantities of glass former additives required in the batch melter feed preparation process. Bulk glass formers are measured (e.g., weighed), and pneumatically transferred to the Additive Filter/Receiver tank (5-DC-65) using a Bag Dump Station (5-BG-64). A diverter valve (5-VL-18) directs the constant volume feed operations of glass formers from either of two Slurry Tanks (5-TK-29A/B). The bulk glass former system is controlled by a combination of local and distributed control systems.

2.3.2 Concerns

Table B.3 describes the results of the FMEA for the Additive Transfer system. Several findings are noted in Table B.3, however, the FMEA makes no recommendations since it is felt that maintenance can be used to recover from most component failures.

2.4 Melter System

2.4.1 Description

The Melter system is presented on Figures A-8 through A-12. CLDs are provided in Figures A-13,14. The Melter system is designed to vitrify properly formulated feed slurry to produce glass of an acceptable quality.

The VITPP melter is joule-heated and uses 5 sets of water-cooled, molybdenum electrodes to provide power for joule-heating (joule-heating is achieved by passing a current through the glass pool by electrodes placed inside the melter). The electrodes are not in contact with corrosive waste materials, but instead, are submerged in a benign glass formulation (e.g., non-corrosive) in two isolated side-chambers. Isolation walls provide a physical barrier that serve to minimize the transport of corrosive waste materials into the side-chambers. The isolation walls are electrically conductive and permit current to travel between the electrodes and molten glass in the main-chamber (vitrification of silo residues occur in the main-chamber). Glass levels in each chamber (two side, one main) are maintained by independent feed systems.

The melter design temperature is 1400°C with a maximum operating temperature of 1350°C (expected operating temperatures are estimated at 1250 °C). Waste slurry is introduced into the melter by a Melter Feed Pump (5-PM-17C). Since the melter is designed to operate with partial cold cap coverage, some of the feed material will

dissolve into the molten bath, with the remaining forming part of the cold cap. Compressed air is used for agitation in the VITPP melter to increase the waste processing rate. The air bubbler system is located in the center of the melter and forces air through the molten bath. Air flow is regulated to control the utilization of air for: (1) dissolution of the feed materials and cold cap, (2) distribution of heat in the bath, and (3) reduce the potential of elemental metals and debris settling in the glass melt (melter bottom). Molten glass is discharged from the VITPP melter in a continuous mode. The batch method is accomplished by using an air lift feature located in the bottom of the discharge chamber. The air lift injects air bubbles that "lift" molten glass over the edge of the discharge trough. The rate of discharge can be controlled by the rate of air flow applied. This mode of operation requires the glass level in the main-chamber to be maintained below the discharge trough. The air lift gives flexibility in the control of glass flow through the melter and to the gem making machine.

2.4.2 Concerns

Table B.4 describes the results of the FMEA for the melter system. Significant findings include:

Melter Feed Pump (MFP), 5-PM-17C: Low flow or low pressure due to a motor or pump failure can cause loss of melter feed capability. Currently, the VITPP incorporates no method of detection outside of cold cap and melter discharge viewing. It is recommended that a melter low feed rate alarm be provided to alert operators of this upset condition (also see Section 2.2.2, Melter Feed Valve).

Slurry material can remain in the melter feed line if it is improperly flushed after MFP operations. Heating effects can cause slurry feed material to bake onto the interior walls of the melter feed line, resulting in line pluggage. This may result in high melter feed discharge pressure and release of contamination if a pump seal leaks. It is recommended that an interlock be provided to shutdown the MFP on high pressure and a MFP high pressure alarm be provided in the control room (local alarm is provided).

Melter Feed Pump, Valves: Manual valves that provide an isolation function for the MFP may inadvertently be closed (operator error). This may result in high melter feed discharge pressure and release of contamination if a pump seal leaks. The recommendations are the same as for MFP line pluggage: an interlock be provided to shutdown the MFP on high pressure and a MFP high pressure alarm be provided in the control room (local alarm is provided).

The MFP Flush Valve, FV-171: Provides the melter feed line (including MFP) with manual flushing capability to prevent slurry feed material from drying out and plugging the melter feed system. Premature opening or opening over long durations caused by a valve malfunction or operator error would result in excessive water addition to the melter if the MFP is on, or if the MFP is off and water leaks through the pump seals. Water addition to the melter may result in a pressure excursion (caused by the evolution of steam) and transfer to the Emergency Off-gas System. Although several methods of detection exist for this event (ZSH-171 valve open indicator, PDIC-520

high melter differential pressure alarm, PDIS-170 high melter differential pressure alarm), it is recommended that an analysis be performed to determine if this event can cause an undesirable condition (under worst conditions). If so, it is recommended that an automatic system with independent monitoring be added to control the flush system.

Likewise, if FV-171 fails to open upon demand due to valve malfunction or operator error, slurry remaining in the melter feed line will not be flushed and becomes subject to drying and pluggage. This may result in high melter feed discharge pressure and release of contamination if a pump seal leaks. It is recommended that an interlock be provided to shutdown the MFP on high pressure and a MFP high pressure alarm be provided in the control room (local alarm is provided).

The MFP Flush Manual Valve, V-SL098-DTK: Provides the melter feed line (downstream of MFP) with increased flow rate capability to dislodge severely plugged material in the melter feed line. Inadvertent opening caused by operator error would result in possible long term water addition to the melter that may result in a pressure excursion (caused by the evolution of steam) and transfer to the Emergency Off-gas System. Although several methods of detection exist for this event (melter camera, PDIC-520 high melter differential pressure alarm, PDIS-170 high melter differential pressure alarm), it is recommended that an analysis be performed to determine if this event can cause an undesirable condition (under worst conditions). If so, it is recommended that an automatic system with independent monitoring be added to control the manual flush system.

Closed Loop Cooling Water System; Radiator Cooling Fan: In the event of loss of air flow (motor or fan failure, TSH-504 fails low), the Closed Loop Cooling Water (CLCW) temperature will increase causing melter components to overheat. Although local temperature indication is provided on melter components (additionally, a local high temperature alarm is provided), it is recommended that a control room high temperature alarm be provided to allow the operator to more quickly respond to temperature upsets. Additionally, it is suggested that the Emergency once through cooling water system be activated by the high temperature alarm discussed above.

Closed Loop Cooling Water System; Manual Valve, V-513: The surge tank provides the CLCW system the capability to respond to volumetric changes (i.e., temperature changes) and is designed with a 15 psi rated relief system. In the event of an inadvertent closing of manual valve V-513, the surge tank will fail to perform its functions. If the CLCW recirculating pump or radiator fan motor fail, concurrent with the inadvertent valve closure, the CLCW system may over pressurize. It is recommended that a pressure relief device be installed on the cooling loop side of V-513.

Emergency "Once-Through" Emergency Water System; Detection Devices: PIT-540, PIR-540 and interposing relays provide detection of CLCW low pressure to initiate valves FV-542, 540, and 541 status change. Failure of these devices (or relays) to activate upon demand may result in no Emergency "Once-Through" water flow through the CLCW system and result in the inability to cool melter components. Recommendations include placing these detection devices on a critical proof testing

schedule, having redundant cooling water low pressure detection devices, and providing a low flow alarm in the control room to monitor flow of Emergency "Once-Through" system.

Bubbler System: Loss of air flow to the main chamber bubbler system will result in molten glass flowing into the bubbler tubes and impairing/prohibiting bubbler function (it is assumed that a bottled air source provides failsafe air supply to the bubbler system). This condition occurs when UA-R001 fails closed due to malfunction or operator error, or if UA-R001 requires isolation (for maintenance). It is recommended that a parallel air line (with pressure regulator) be installed to improve air reliability and allow maintenance.

Loss of air flow to the lift chamber bubbler will result in molten glass flowing into the bubbler tube and impairing/prohibiting discharge operations (it is assumed that a bottled air source provides failsafe air supply to the bubbler system). This condition occurs when UA-R002 fails closed due to malfunction or operator error, or if UA-R002 requires isolation (for maintenance). It is recommended that a parallel air line (with pressure regulator) be installed to improve the lift chamber bubbler reliability and permit maintenance on valve UA-R002.

2.5 Waste Water Treatment

2.5.1 Description

The Waste Water Treatment system is presented on Figure A-15. Figure A-16 presents the CLD used in this evaluation. The Waste Water Treatment system is discussed in the following paragraphs.

A partially clarified Thickener overflow stream drains through a sloping line to the Recycle Water Tank (RWT). In addition to a suspended bentonite loading of approximately 1 percent, this liquid is also expected to contain dissolved process solids (such as nitrates, carbonates, sulfates, and various metals) and dissolved radon. From the RWT, the Thickener overflow liquid is routinely pumped to the following destinations and processed as indicated:

- Silos 1 and 2, where it is used to hydraulically mine solid waste and then transport it to the Thickener.
- Off-gas System Quench Tower, where it is used on a once-through basis to contact the hot melter off-gas before itself being cooled and returned to the Thickener.
- Wastewater Filter, where particles 5-10 microns and larger are removed and periodically back flushed to the Thickener, and from which the filtrate proceeds to the Sparge Tank for radon removal.

In addition to filtered Thickener overflow liquid, the Sparge Tank also receives the purge of alkaline solution from the Quench Tower and Scrubber (5-SB-07/22) and the waste desiccant solution from the Desiccant Tower (Off-gas Treatment system).

These combined liquids are warmed by a submerged electric heater. Clean instrument air is introduced near the bottom of the tank through submerged sparge piping. As it bubbles upward through the liquid, the air strips out dissolved radon and carries it overhead, back to the Off-gas Treatment system. Meanwhile, the radon-depleted process liquid is pumped from the bottom of the Sparge Tank to the Building Sump Tank (BST). The BST also routinely receives:

- Low-solids liquids from Thickener Containment
- Unfiltered building sink drains
- Cooling tower blowdown
- Lab sink drains
- Low-solids liquids from Spill Containment.

It is understood that the laboratory will segregate spent samples of process slurry for eventual recycle to the Thickener so that the sink drain effluent should be normally free of radionuclides.

The liquid accumulation in the Building Sump Tank represents the entire VITPP process liquid waste. This liquid is periodically pumped from the BST to the existing FEMP High Nitrate Storage Tank, which is located outside the VITPP battery limits. There, it mixes with various other FEMP aqueous wastes before being discharged to the Advanced Waste Water Treatment facility (AWWT).

2.5.2 Concerns

Table B.5 describes the results of the FMEA for the Waste Water Treatment system. Significant findings include:

Manual Valve (Spare Storage Tank), V-327: Inadvertent opening of this valve will result in transfer of recycle water to the Spare Storage Tank. Although a level alarm is provided on the Recycle Water Tank (LALL-100), it is recommended that a level indicator be provided for the Spare Storage Tank.

Recycle Tank Vent Damper, V-340: Failure of this component in the closed position due to an operator error will result in the inability to vent the Recycle Tank to the off-gas line. Currently no method of detection exists for this condition, therefore, it is recommended that a local pressure indicator be provided on the Recycle Tank to indicate a closed/blocked vent valve condition (a study of tank vent routing and venting is to be performed before VITPP Phase II. This concern and comment is generic for all tank vents).

2.6 Radon Removal System (Sparge Tank)

2.6.1 Description

The Radon Removal System (Part of the Waste Water Treatment System) is presented on Figure A-17. The Radon Removal System collects the net excess water from the pilot plant for radon removal prior to discharging the water to the High Nitrate Tank and ultimately to the AWWT. The following paragraph describes this system.

Water streams from the off-gas desiccant tower, the off-gas scrubber, and the waste water filters are collected in the Sparge Tank (5-AE-39). The water is heated by in-tank, submerged heating elements and sparged with plant air for radon removal. The water is routed from the tank by the sparge tank pump (5-PM-42) to the building sump. The water is ultimately pumped to the AWWT via the High Nitrate Tank.

2.6.2 Concerns

Table B.6 describes the results of the FMEA for the Radon Removal System. Significant findings include:

Sparge Pump, 5-PM-42: A power outage will cause a loss of flow condition from the Sparge Tank (5-AE-39) to the building sump (PI-428 will indicate this condition). As the plant becomes reactivated (stand-by power), several systems will re-establish water flow to the Sparge Tank (flows from the off-gas desiccant tower, the off-gas scrubber, and the waste water filters). Over an extended outage, this water will accumulate in the Sparge Tank. It is recommended that connecting the Sparge Pump to stand-by power for plant restart during extended outages be considered.

Electrical Heaters: A power outage will cause a loss of heating capacity by the in-tank, submerged heating elements for radon removal. As the plant becomes reactivated (stand-by power), several systems will re-establish water flow to the Sparge Tank (flows from the off-gas desiccant tower, the off-gas scrubber, and the waste water filters). Over an extended outage, this water will accumulate in the Sparge Tank. It is recommended that the electrical heaters be connected to stand-by power for plant restart/radon removal operations during extended outages be considered.

Solenoid Valve, FY-391: Failure of this solenoid valve to activate upon demand due to malfunction or inadvertent closure will result in a loss of sparge air flow condition. Consequently, water leaving the plant is high in radon content. It is recommended that a manual bypass to FY-391 be considered.

2.7 Off-gas Treatment

2.7.1 Description

The Off-gas Treatment system is presented on Figures A-10, A-18 through A-21. The CLD used for this analysis is provided in Figure A-22. The Off-gas Treatment system treats the gases produced in the melter prior to transfer to the radon treatment system (Off-gas Air). The system also provides for confinement of these gases by maintaining the melter at a vacuum relative to the surrounding atmosphere. Treatment includes cooling and moisture condensation, solids scrubbing, acid gas scrubbing, and drying.

The melter gases consist of moisture evaporated from the feed, reaction gases (such as acid gases and radon), in-leakage air, particulate entrained from the melter, and air from bubblers and the air lift. The melter off-gas exits the melter plenum and flows into the film cooler, which is mounted in a nozzle on the melter shell. The film cooler adds compressed air to the off-gas to provide direct off-gas cooling. Cooling minimizes

sticky material deposition in piping and lowers the design temperature for downstream piping and equipment.

The off-gas leaving the film cooler then flows to the quench tower where the off-gas is cooled using direct contact with water. Two spray nozzles, which are located inside the tower, spray water into the off-gas. Contact with the water spray both cools the gas and condenses moisture from the gas. The incoming water is recycle water from the recycle water pump. The quench tower pump transfers the quench water from the tower, through the heat exchanger, and to the thickener. Thickener overflow returns to the recycle water tank. Moisture condensed from the off-gas is purged from the recycle water tank, filtered, and sent to the radon sparge tank for radon removal. Waste water from the radon sparge tank flows to the building sump and then to the AWWT for treatment prior to NPDES discharge. Caustic is periodically added to the quench tower as needed to maintain the water alkaline, thereby reducing corrosion in carbon steel piping, thickener, recycle water tank, and wastewater system.

The quenched off-gas then flows to the scrubber for particulate and SO_2 removal. The off-gas first enters the jet venturi scrubber, which provides 95% particulate removal. A scrub pump transfers scrub water from the scrubber tank to the venturi scrubber. The scrub water flows through a nozzle located inside the venturi scrubber, which forms a spray for particulate scrubbing. The off-gas and water leaving the venturi scrubber flow into the scrubber tank where the scrub water falls into the tank.

The off-gas then flows into the packed bed for 99% SO_2 removal. The packed bed also provides an undetermined amount of CO_2 and NO_x removal. Countercurrent flow with scrub water over the packed bed provides the required scrubbing. The scrub water entering the packed bed is provided by the same scrub pump that provides scrub water to the venturi scrubber. The scrub water leaving the bed also gravity drains into the scrubber tank. Caustic is periodically added to the scrubber tank as needed to maintain the scrub water alkaline, thereby improving SO_2 removal. SO_2 that is dissolved or reacted with caustic in the scrub water is periodically purged to the radon sparge tank. Makeup water is then periodically added to compensate for the purged water.

The process tank off-gas vents and the radon sparge tank vent join with the off-gas leaving the scrubber. The combined off-gas stream then flows to the desiccant tower for moisture removal to 15% relative humidity. The off-gas flows upward through the tower contacting solid desiccant tablets. The desiccant consists of activated alumina, which does not dissolve, and two proprietary desiccants. A saline brine forms from the removed water and the desiccant. Water is removed due to its limited equilibrium vapor pressure over the saline brine. The brine flows down into a collection tank. A pump periodically pumps the brine to the radon sparge tank.

The dehumidified off-gas leaving the desiccant tower moves to the Off-gas Air system (see Section 2.8) for further processing.

2.7.2 Concerns

Table B.7 describes the results of the FMEA for the Off-gas Treatment system. Significant findings include:

Film Cooler: Loss of compressed air flow will occur during an air compressor failure, PCV-422 failing closed, power loss, or operator error. Immediate effects include downstream piping and coatings exceeding design temperature limits. Although alarms (PISL-441/TIR-071) exist for this condition, there is the possibility that operator response (manual changeover) will not mitigate against damages in a timely manner. It is recommended that operator response times (e.g., to open PCV-422 bypass) be quantified to determine if system damage will occur to those downstream components. Additionally, it is suggested that in the event of power loss, an air compressor be connected to stand by power with a solenoid valve to shutoff instrument air flow to the film cooler after the melter vents to the Emergency Off-gas Treatment System (EOS).

Quench Tower Flow Control Valve, FCV-070: A low flow condition occurs when the valve fails closed. The loss of quench water leads to a high gas temperature in downstream equipment with potential problems in the scrubber due to increased scrubber water temperature. It is recommended that a bypass with block valves for FCV-070 be considered.

A high flow situation occurs when Control Valve FCV-070 fails open. Excessive quench water could lead to blockage of the off-gas line. Level alarms in the quench tower will signal this condition. LCV-070 will open in response to the high level. It is recommended that a high flow alarm for FIC-070 be considered.

Quench Tower Level Control Valve, LCV-070: A low flow condition occurs when LCV-070 fails closed. This results in high quench tower liquid that may lead to stoppage of off-gas flow and high melter pressure (possibly diversion of off-gas to EOS). It is recommenced that block and bypass valves be added to LCV-070.

A high flow situation from the bottom of the quench tower occurs when LCV-070 fails open. Low quench tower liquid level may cause the pump to cavitate. Although monitored for low level condition (independent detection is also provided), it is recommended that an interlock be added to shutoff the pumps upon a low quench tower liquid level.

2.8 Off-gas Air

2.8.1 Description

The Off-gas Air system is presented on Figures A-10 and A-23. The Off-gas Air system treats the gases from the Off-gas Treatment system for radon and radioactive particulate removal. The system also provides for confinement of these gases by maintaining the melter at a vacuum relative to the surrounding atmosphere. Treatment includes radon removal, and HEPA filtration.

Dehumidified off-gas enters the Off-gas Air system from the desiccant tower in the Off-gas Treatment system (Section 2.7) to one of two parallel carbon bed vessels (one operating, one spare) for radon removal. Radon is adsorbed onto the carbon bed where it remains while it radioactively decays to its daughter products. The radon daughter products remain adsorbed on the carbon.

Off-gas from the carbon bed next flows to one of two parallel HEPA filters (one operating, one spare) for removal of radioactive particulate. The off-gas then flows to the exhaust fan and the stack. The exhaust fan induces air flow through the off-gas system (to include Off-gas Treatment and Off-gas Air), and as such, maintains the vacuum in the melter.

2.8.2 Concerns

Table B.8 describes the results of the FMEA for the Off-gas Air system. Significant findings include:

Carbon Bed Inlet/Outlet Dampers, FV-190/192: The motorized dampers provide isolation capability to the A&B Carbon Beds. Failure of inlet damper in the closed position due to operator error or valve malfunction will result in high negative pressure in the carbon bed and HEPA filter. This condition, in addition to causing the melter to vent to the EOS, may cause either component (carbon bed or HEPA filter housing) to rupture (releasing contaminates into the atmosphere). It is recommended that the specification for the Carbon Bed enclosure be reviewed to verify that it can tolerate the negative pressure associated with this condition as well as the new Phase II exhausters.

Carbon Bed Filter: The function of this filter is to remove radon through adsorption. Inability to remove radon may be caused by the depletion of the carbon media due to improper maintenance procedures and may result in the release of contamination to the environment. It is recommended that an alarm for the AIR-191 radon indicator be provided to alert control room operators of this condition.

The Carbon Bed filter's function may also be impaired by carbon oxidation with NOx. High NOx concentrations presents a potential fire situation due to the heat liberation in this reaction (followed by release of contamination to the environment). It is recommended that a temperature alarm and CO/CO_2 gas detectors be provided at the discharge of the Carbon Beds to detect oxidation. Additionally, a fire suppression system (presently planned for Phase II) should be considered for the Carbon Beds.

Manual Valve, V-557: Inadvertent opening of this valve during Phase II due to operator error will result in the off-gas bypass to the Carbon Filter. Inability to remove radon from the off-gas will result in potential particulate release to the environment. However, it is noted that transient elution of radon from the carbon beds resulting in a large release to the environment is a concern. In the event of excessive release, it would be beneficial to provide the ability to isolate the beds. This could only be achieved using the normal off gas if the bypass exists. Although alarms alert operators of the open bypass condition (PDIT-190; low differential pressure), it is

recommended that administrative control features be implemented to control the use of manual valve, V-557 after Phase I operations.

Exhaust Fan, 5-FA-25: Failure of the Exhaust Fan will lead to automatic venting of the melter to the EOS. The melter will move to an idle mode while the plant is down for exhauster repair/replacement. A spare Exhaust Fan is recommended.

2.9 Emergency Off-gas Treatment

2.9.1 Description

The Emergency Off-gas Treatment system is presented on Figures A-10 and A-24. The CLD used for this analysis is provided in Figure A-25. The EOS is discussed in the following paragraphs.

Upset conditions, such as off-gas exhaust fan failure or inadvertent valve closing, could prevent the exhaust fan from maintaining a vacuum in the melter. The melter, although idled during such conditions, must be maintained under a vacuum relative to the melter room to prevent the out-migration of gases from the melter. The EOS ensures that a vacuum is maintained during such upset conditions. System design is based on in-leakage air from the melter, film cooler air, and cooling air added to the EOS. The EOS maintains a melter vacuum of ½" Water Column. The system also provides over pressure protection for the melter.

When the melter pressure rises to a set point, a valve opens and the off-gas flows to the EOS. The hot off-gas is cooled by the direct addition of cold air from the melter room. The cooled off-gas then enters the knock out pot, which is a cyclone separator. A cyclone separator uses centrifugal forces to enhance the separation of solids and sticky materials from the off-gas. The off-gas from the knock out pot then flows to a HEPA filter for removal of radioactive particulate. The filtered off-gas flows to the emergency exhaust fan and the stack. The fan induces air flow through the system and maintains the vacuum in the melter when the off-gas cannot flow to the off-gas system. EOS fan operation is maintained during normal plant operations to ensure that the EOS is available when needed.

The EOS also provides melter over pressure protection. In the unlikely event that the melter pressure becomes positive, a paper-type rupture disk breaks, which allows the off-gas to bypass the on-off valve and flow into the EOS. The off-gas then flows to the knock out pot for removal of solids and sticky materials and to the mist eliminator, which is a Chevron mist eliminator, for additional removal of solids and sticky materials. A relief valve finally releases the off-gas to the atmosphere at a safe location.

2.9.2 Concerns

Table B.9 describes the results of the FMEA for the Emergency Off-gas Treatment system. Significant findings include:

Control Valve, FV-370/360: Failure of this valve to activate upon demand due to sticking or solenoid malfunction (SY-370 failure to open FV-370), inadvertent closure of valves V-OG-1288 and/or OG-104, or PDAH-171 and -250 fail low (condensation at a low point in the instrumentation piping) will result in melter over-pressurization and opening of rupture disk OS-350. The exhaust fan will respond to this event and reduce melter pressure to a negative level, however, the positive pressure condition will allow a short term radon release in the vicinity of the melter. It is recommended that administrative/operation procedures be implemented to ensure and verify proper positioning of all manual valves (e.g., V-OG-1288 or OG-104). Additionally, it is suggested that piping associated with PDAH-171 and PDAH-250 is free of low points that permit the accumulation of water.

Malfunction of solenoid valve SY-360 to activate FV-360 will result in high temperature off-gas to the EOS. Sections of piping immediately downstream of FV-360 will experience high temperature. A manual method exists for operations to open FV-360 to avoid structural damage. Additionally, field inspections have indicated that the lines down stream of FV-360 are not insulated as shown in the P&IDs. The P&IDs should be modified to show the actual conditions.

Emergency Off-gas Fan, 5-FA-38: A belt failure of this component will result in the loss of off-gas backup capability. Currently, only a running status indicator is provided in the control room to alert operators of the Emergency Off-gas Fan status. It is recommended that a pressure alarm (or speed switch) be installed to the EOS to detect conditions such as belt failure and alert the control room operators.

2.10 Process Cooling Water

2.10.1 Description

The Process Cooling Water system is presented on Figure A-26. The Process Cooling Water system is discussed in the following paragraphs.

The Process Cooling Water system is designed to cool 200 gpm from 115 °F to 85 °F at an ambient 78 °F wet bulb temperature. Cooling water for both the Melter and the Gem Machine were included in the original heat loads for its design (since then, both of these duties have been transferred to an air cooled closed loop cooling system). This system is comprised of a Cooling Tower and a Cooling Tower Pump. The cooling tower serves the heat exchanger in the Off-Gas System. The Process Cooling Water System removes heat from normal processing operations, and rejects that heat via evaporative cooling. Chemistry control of the tower water is maintained by a combination of tower water blowdown and the use of treated water as make-up.

2.10.2 Concerns

Table B.10 describes the results of the FMEA for the Process Cooling Water system. Significant findings include:

Cooling Tower Pump, 5-PM-28: This pump circulates process cooling water through Heat Exchange 5-HE-27. Failure of this pump to circulate will result in the loss of heat

rejection for the Quench Tower liquid, and eventually cause a plant outage condition. It is recommended for consideration that a redundant cooling tower pump be added to this system to provide backup capability.

Cooling Tower Fan, 5-CT-26: The cooling tower fan removes heat from the Quench Tower liquid. Failure of the fan to provide this function will result in loss of forced air flow. Maintenance procedures may mitigate a plant outage condition (e.g., replace fan/motor) since natural draft in the tower will permit a cooling period until temperature limits are exceeded. It is recommended that the fan be placed on standby power to support the off-gas system (on standby power).

Heat Exchanger, 5-HE-27: The heat exchanger removes heat from the Quench Tower liquid. The heat exchanger tubes serve as a boundary between the Process Cooling Water and the contaminated water in the Quench Tower. A tube leak initiating from a bad weld or the effects of corrosion may permit contaminated water to enter the Cooling Tower water system causing a radon release to the environment if the Quench Tower water pressure is higher than the Process Cooling Water system. Therefore, it is recommended that the Process Cooling Water pressure be maintained above the Quench Tower water pressure, and that Process Cooling Water chemistry be properly maintained to prevent/minimize the effects of corrosion.

2.11 Compressed Air

2.11.1 Description

The Compressed Air system is presented on Figure A-20. The Compressed Air system is discussed in the following paragraphs.

The Compressed Air System is comprised of one air compressor with a capacity of 483 SCFM @100 psig and a 400 SCFM dryer, and one air compressor with a capacity of 320 SCFM @125 psig and a 200 SCFM dryer. Both of these trains go to a single air receiver and then to a single distribution system for both plant and instrument air. Plant Air requires high pressure air (5 micron, 100 psig) for operation of Diaphragm Pumps, the Gem Machine, and miscellaneous other uses. Instrument Air requires dry compressed air (-40 °F dew point, < 1 ppm oil, 100 psig) for pneumatically operated and controlled valves.

The existing Compressed Air system makes no provision for critical air users to have priority use of the air that is available during an emergency shutdown.

2.11.2 Concerns

Due to the configuration change of the Compressed Air System currently in progress, the FMEA was deferred.

3.0 BIBLIOGRAPHY/REFERENCE

1. Center for Chemical Process Safety, *Guidelines for Hazard Evaluation Procedures*, Second Edition, American Institute of Chemical Engineers, New York, 1992.

2. U.S. Department of Energy, 1995, "OU4 VITPP Phase II Treatability Study Work Plan", Revision 1, Fernald Environmental Management Project, DOE, Fernald Field Office, Fernald, OH.

APPENDIX A, FIGURES

FMEA drawing summary, listed by system.

SYSTEM	FIGURE	DWG TYPE	DWG NUMBER	PAGE #
Dewatering				
	A-1	P&ID	94X-5900-N-00269, Rev. 8	A-5
	A-2	CLD	N269, sht 2	A-6
Feed Preparation				
	A-3	P&ID	94X-5900-N-00270, Rev. 8	A-7
	A-4	P&ID	94X-5900-N-00271, Rev. 7	A-8
	A-5	CLD	N270, sht 6	A-9
Additive Transfer				
	A-6	P&ID	94X-5900-N-00529, Rev. 4	A-10
	A-7	P&ID	94X-5900-N-00530, Rev. 4	A-11
Melter				
	A-8	P&ID	94X-5500-N-00962, Rev. 0	A-12
	A-9	P&ID	94X-5900-N-00891, Rev. 3	A-13
	A-10	P&ID	94X-5900-N-00272, Rev. 5	A-14
	A-11	Electrical Diagram	94X-5900-E-00416, Rev. 10	A-15
	A-12	Electrical Diagram	94X-5900-E-00417, Rev. 6	A-16
	A-13	CLD	N891, sht 1	A-17
	A-14	CLD	N891, sht 1A	A-18

Waste Water Treatment				
	A-15	P&ID	94X-5900-N-00274, Rev. 10	A-19
	A-16	CLD	N274, sht 1	A-20
Radon Removal				
	A-17	P&ID	94X-5900-N-00825, Rev. 1	A-21
Off-gas Treatment				
	A-10	P&ID	94X-5900-N-00272, Rev. 5	A-14
	A-18	P&ID	94X-5900-N-00273, Rev. 11	A-22
	A-19	P&ID	94X-5900-N-00275, Rev. 12	A-23
	A-20	P&ID	94X-5900-N-01006, Rev. 0	A-24
	A-21	Pneumatic Schematic	SD-13001	A-25
	A-22	CLD	N273, sht 2	A-26
Off-gas Air				
	A-23	P&ID	94X-5900-N-00315, Rev. 10	A-27
	A-10	P&ID	94X-5900-N-00272, Rev. 5	A-14
Emergency Off-gas Treatment				
	A-24	P&ID	94X-5900-N-00820, Rev. 5	A-28
	A-10	P&ID	94X-5900-N-00272, Rev. 5	A-14
	A-25	CLD	N820, sht 1	A-29

Process Cooling Water				
	A-26	P&ID	94X-5900-N-00314, Rev. 7	A-30
Compressed Air				
	A-20	P&ID	94X-5900-N-01006, Rev. 0	A-24

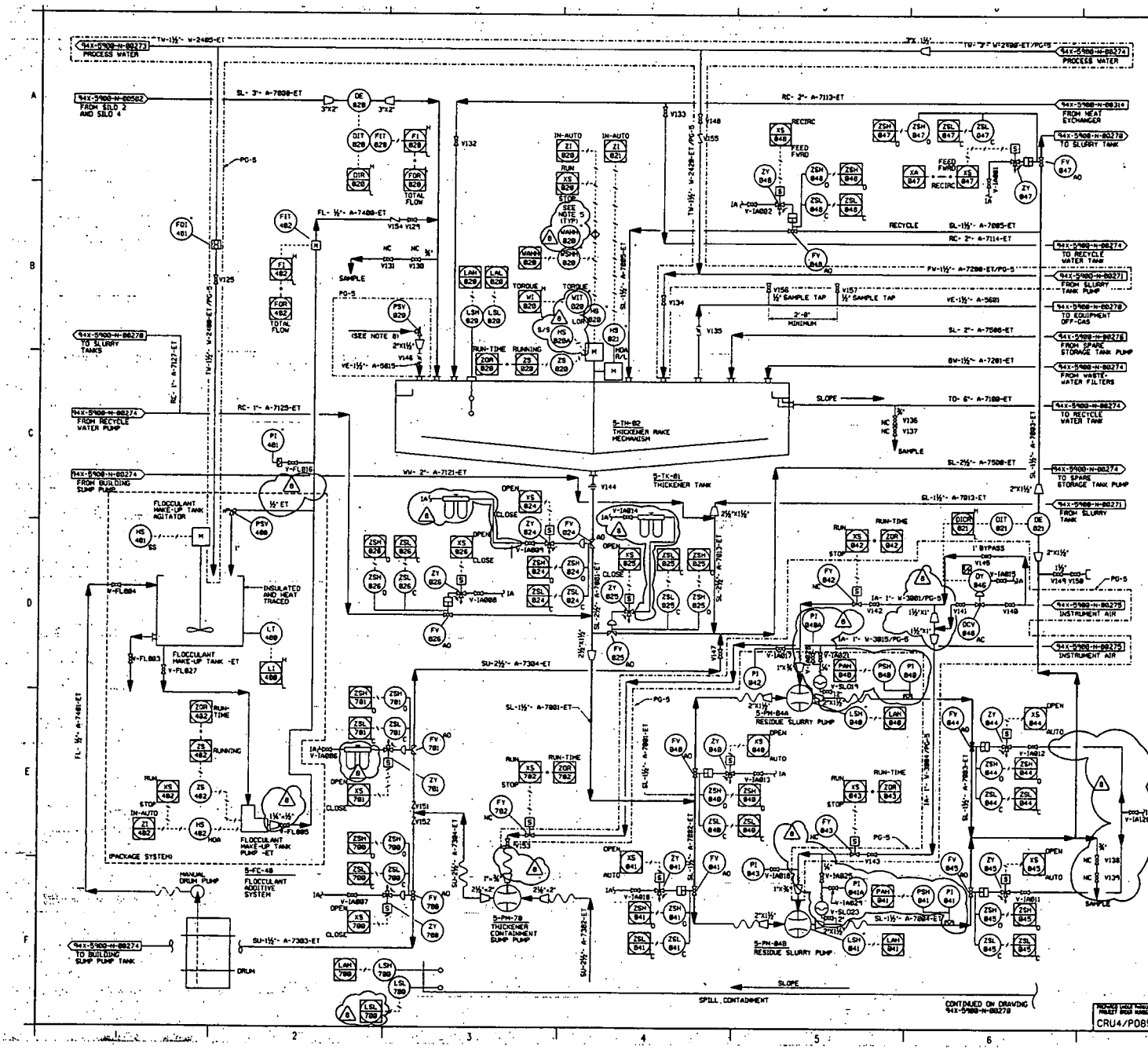

NOTES

1. FOR DRAWING INDEX SEE DRAWING 94X-5900-X-00353.
2. FOR SYMBOLS AND LEGEND SHEET SEE DRAWING 94X-5900-N-00268.
3. WHERE DUAL PUMPS ARE SHOWN ONE IS AN INSTALLED SPARE.
4. HEAT TRACE LINES OUTSIDE OF HEATED AREAS ONLY.
5. '*' INDICATES PROVIDED BY EQUIPMENT VENDOR.
6. INSULATE AND ELECTRIC HEAT TRACE ALL VENTS, DRAINS, AND SAMPLE LINES THRU LAST VALVE OR HIGH PART OF LINE AS APPLICABLE FOR ALL SYSTEMS WHERE HEADER OR VESSEL IS HEAT TRACED.
7. ALL PIPING AND EQUIPMENT ARE PERFORMANCE GRADE 4 (PG-4) AS INDICATED ON THE PERFORMANCE GRADE CHART SHOWN ON 92X-5900-N-00268, UNLESS OTHERWISE NOTED.
8. PSV-828 (VACUUM BREAKER) SHALL BE INSTALLED IN PHASE 2. V146 SHALL BE LOCKED OPEN OR REMOVED IN PHASE 2.
9. DACS INTERLOCKS ARE SHOWN ON THE FOXBORO LOGIC SKETCHES.

LAST VALVE NUMBER | V157

REFER DWG NO.	REFERENCE DWG TITLE
94X-5900-X-00353	DRAWING INDEX SHEET 1 OF 4
94X-5900-N-00268	SYMBOLS AND LEGEND SHEET
94X-5900-N-00278	FEED PREPARATION SHEET 1 OF 2
94X-5900-N-00271	FEED PREPARATION SHEET 2 OF 2
94X-5900-N-00273	OFF-GAS TREATMENT
94X-5900-N-00274	WASTEWATER TREATMENT
94X-5900-N-00275	UTILITIES
94X-5900-N-00276	SPARE STORAGE TANK
94X-5900-N-00314	PROCESS COOLING WATER
94X-5900-N-00562	WASTE RECEIVING SILOS

FOR NFORMATION ONLY

REV NO	REVISION	DRAWN	CHKD	APPD
6	REVISED FROM WALKDOWN OF PHASE 2 PIPING 7B0 ADDED P1-848A, P1-841A, SURGE SUPPRESSORS AND ASSOCIATED VALVES. INCORPORATED DCN# 1636-053, 1636-124, 1636-126, AND 1636-179. ADDED HOSE REDUCERS, AND FILTER/REGULATORS. REPLACED LAL700 WITH LSL700.	Sheet 1 of 4	N/A	9-16-94
7	REVISED IN ACCORDANCE WITH FERMCO MARK-UPS OF THE FOXBORO DACS LOGIC N 25-9 REV B. ISSUED FOR CLIENT/OPERATIONAL REVIEW.	HRR FOR APP	N/A	02/21/95
6	ADDED NOTE 8, ADDED V146	APP		02/12/95
5	DCV846, FV824, FV825, FV826, FV848, FV841, FV844, FV845, FV847, FV848, FV700, FV781 WERE GENERIC SYMBOLS - REVISED FROM WALKDOWN. LOOPS 828, 821, 848, 841, 842, 844, 845, 847, 848, 482 & 782 - REVISED TO AGREE WITH REV B LOGICS; FOR829, ZOR829, ZOR842, ZOR843, FOR482, ZOR482, ZOR782 TOTALIZE SYMBOL. DUPLICATION DELETED. ADDED V-1A801 THRU V-1A810. ADDED HOSES; INCORPORATED DCN 1638-056	JB 12-8-95	N/A	
4	ADDED VALVES V1A801 THRU V1A818 PG-5 BOUNDARIES. ADDED RC-1"-A-7121-ET.	JB 9-12-95	RKK	9-12-95
3	P1481 AND FO1418 ARE BEING PROVIDED AS PART OF THE FLOCCULANT PACKAGE. REVISED INTERLOCKS FOR PAH848, PAH841, LAH788. DELETED FLOC SPILL CONTAINMENT. ADDED THICKENER RAKE LIFT MOTOR HOSES. FLOCTB, DI-L2820, LSH700, LSL700, LS-700, AND FLOC TANK PIPE SIZES. DELETED 2T1828, 2T1829, AND "-" ON PSV482, ZS482, AND HS482	APP 11-22-94	RKK 11-23-94	
2	ADDED REDUCER, REVISED LINE 1A-1"-V-3815	JB 7-29-94	RC 7-29-94	
1	GENERAL REVISIONS AND SCOPE CHANGE OF 2-24-94	RAZ 05-12-94	RC 05-12-94	RE 05-12-94
0	APPROVED FOR CONSTRUCTION	RAZ 01-06-93	RCE 01-06-93	

UNITED STATES DEPARTMENT OF ENERGY
FERNALD ENVIRONMENTAL MANAGEMENT PROJECT

THIS DRAWING PREPARED BY
PARSONS
THE RALPH M. PARSONS CO. · PARSONS MADI, INC. · ENGINEERING-SCIENCE, INC.
CINCINNATI, OHIO

Figure A-1

DRAWING TITLE
MECHANICAL PROCESS
PIPING AND INSTRUMENTATION DIAGRAM
DEWATERING

DRAWN BY J.C. BREWER | DATE 06/25/93 | LEAD ENGINEER SALIM CHAKTOUS | DATE 12-8-93 | CHECKED BY DONALD E. JOHNSON | DATE 12-8-93
SCALE NONE
SUBMITTED FOR APPROVAL R. A. ZIEKOWSKI 11-01-93
PROJECT ENGINEER R. C. EMERTON 11-01-93
DESIGN MANAGER W. PICKLES 05-18-94

PROJECT BOOK NUMBER CRU4/P085
WBS 1.1.1.1.4.3.1 00-90701
DRAWING NUMBER 94X-5900-N-00269 | SHEET NO. N0003 | REV NO. 8

Page A-5

000332

628

Revision	By	Date
0	KSS	11/14/95
1	KSS	2/16/96

Title: N 269 Logic

628

EDC

Author:
Approved:

Sheet: 2 of 11

REC=Recirc.
FF=Feed Forward

③ UCM 2
BLK 51

FOR INFORMATION ONLY

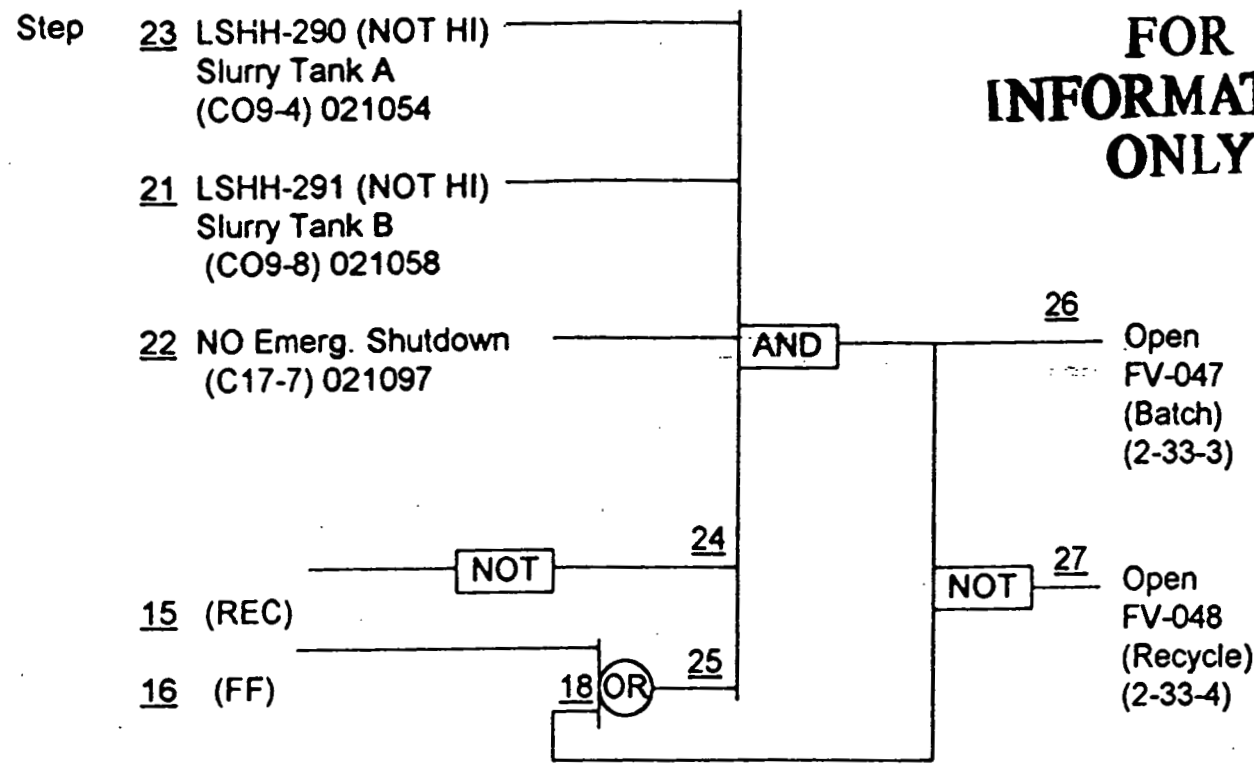

XA-047
L246 (DO4)

FV-047 & FV-048 Open/ Closed (B24) 02-24-9-1&2 (38-*)

Pattern 1: 021041 & 021043 Hi

Pattern 2: 021042 & 021044 Hi

FV-047
L254/L264/L271 (DO4)

FV-047 Closed (ZSL-047) (B24) 021041 (35-307)	I 1
FV-047 Open (ZSH-047) (B24) 021042 (34-307)	I 2
REC/FF (B33) (XS-047) (022033) (B33) (XS-048) (022034)	O

FV-048
L272 (DO4)

FV-048 Closed (ZSL-048) (B24) 021043 (37-307)	I 1
FV-048 Open (ZSH-048) (B24) 021044 (36-307)	I 2

* = FV047B-15

Figure A-2

000033

Date: Oct. 25, 1995

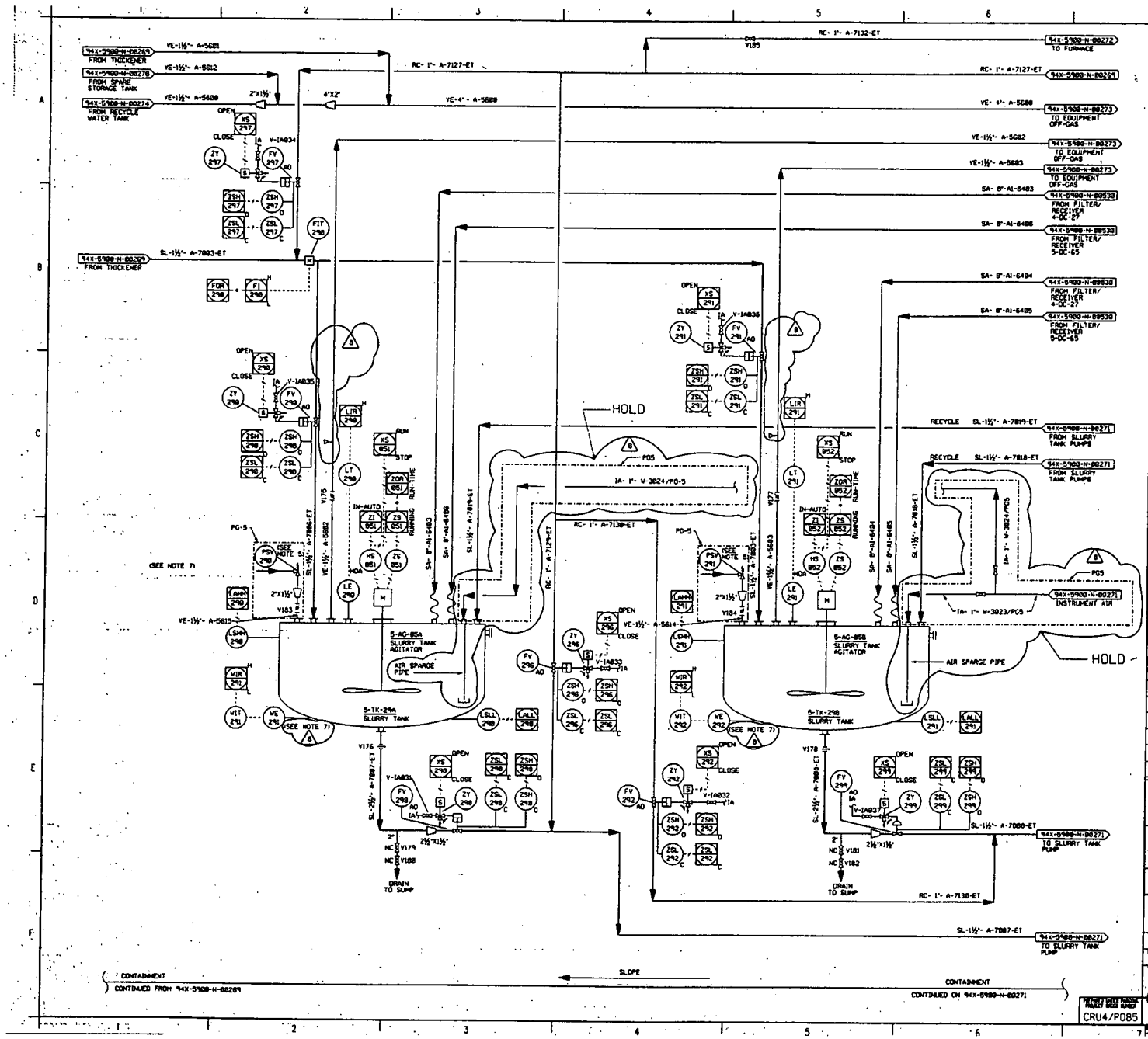

NOTES

1. FOR DRAWING INDEX SEE DRAWING 94X-5900-X-00353.
2. FOR SYMBOLS AND LEGEND SHEET SEE DRAWING 94X-5900-N-00268
3. INSULATE AND ELECTRIC HEAT TRACE ALL VENTS, DRAINS, AND SAMPLE LINES THRU LAST VALVE OR HIGH PART OF LINE AS APPLICABLE FOR ALL SYSTEMS WHERE HEADER OR VESSEL IS HEAT TRACED.
4. ALL PIPING AND EQUIPMENT ARE PERFORMANCE GRADE & IPC-41 AS INDICATED ON THE PERFORMANCE GRADE CHART SHOWN ON 94X-5900-N-00268, UNLESS OTHERWISE NOTED.
5. PSV-298 AND PSV-299 (VACUUM BREAKERS) SHALL BE INSTALLED IN PHASE 2, V183 AND V184 SHALL BE LOCKED OPEN OR REMOVED IN PHASE 2.
6. DACS INTERLOCKS ARE SHOWN ON THE FOXBORO LOGIC SKETCHES.
7. LOAD CELLS WE-291A, WE-291B, WE-291C, AND WE-291D ARE INSTALLED ON SLURRY TANK 5-TK-294 AND LOAD CELLS WE-292A, WE-292B, WE-292C, AND WE-292D ARE INSTALLED ON SLURRY TANK 5-TK-298. EACH OF THESE LOAD CELLS PROVIDE A SIGNAL TO THE WEIGHT INDICATING TRANSMITTERS WIT-291 AND WIT-292 RESPECTIVELY.

FOR INFORMATION ONLY

LAST VALVE NUMBER	V185

REFER DWG NO.	REFERENCE DWG TITLE
94X-5900-X-00353	DRAWING INDEX SHEET 1 OF 4
94X-5900-N-00268	SYMBOLS AND LEGEND SHEET
94X-5900-N-00269	DEWATERING
94X-5900-N-00271	FEED PREPARATION SHEET 2 OF 2
94X-5900-N-00273	OFF-GAS TREATMENT
94X-5900-N-00274	WASTE WATER TREATMENT
94X-5900-N-00276	94X-5900-N-00276
94X-5900-N-00530	GILO 3 MATERIAL TRANSFER
94X-5900-N-00272	FURNACE AND GEM MACHINE

REV NO	REVISION PURPOSE - DESCRIPTION	DRAWN	CHECKED	APPROVED
8	REVISED FROM WALKDOWN LOOPS 291 AND 292 ADDED NOTE 7; REVISED TO INCORPORATE PHASE IIB SCW, ADDED SPARGE AIR AND ADDED HOLDS REVISED PER DCN 1636/956 AND 1636/963	PLEE	N/A	4/4/96
7	REVISED IN ACCORDANCE WITH FERMCO MARK-UPS OF THE FOXBORO DACS LOGIC W 278 REV B. ISSUED FOR CLIENT/OPERATIONAL REVIEW.	HRR FOR APP	NA	2/21/96
6	ADDED NOTE 5, V183 AND V184.	APP		10/12/95
5	FV298, FV291, FV292, FV298, FV297, FV298, FV299 WERE GENERIC SYMBOLS - REVISED FROM MALK-DOWN LOOPS 851 & 852 - REVISED TO AGREE WITH REV B LOGICS; FOR298, ZOR851 & ZOR852 TOTALIZE SYMBOL DUPLICATION DELETED REVISED TO INCORPORATE FERMCO DCN# 1636 954. ADDED VALVES * V-IA831 THRU V-IA837	JB 12-6-95	N/A	
4	ADDED REF TO MELTER PAID	JB 6-6-95	RKK 6-6-95	
3	ADDED LINE NUMBER INFORMATION, NOTE 4 & PG-5 BOUNDARIES, ADDED RC-1"-A-7132-ET.	JB 05-12-95	RKK 05-12-95	
2	CHANGED FROM FLANGED CONNECTION TO SLIP-ON HOSE CONNECTION	APP 9-23-94	RKK 9-23-94	
1	GENERAL REVISIONS AND SCOPE CHANGE OF 2-24-94	RAZ 3-2-94	RC RE	3-2-94 3-17-94
0	APPROVED FOR CONSTRUCTION	RAZ 8-8-93	RCE 8-8-93	

UNITED STATES DEPARTMENT OF ENERGY
FERNALD ENVIRONMENTAL MANAGEMENT PROJECT

THIS DRAWING PREPARED BY
PARSONS
THE RALPH M. PARSONS CO. - PARSONS MAIN, INC. - ENGINEERING-SCIENCE, INC.
CINCINNATI, OHIO

Figure A-3

DRAWING TITLE
MECHANICAL PROCESS
PIPING AND INSTRUMENTATION DIAGRAM
FEED PREPARATION SHEET 1 OF 2

DRAWN BY	DATE	LEAD ENGINEER	DATE	DESIGNED BY	DATE
J.C. BREWER	05/23/93	SALIM CHAKTOUS	5-8-93	DONALD E. JOHNSON	05-05-93

SUBMITTED FOR APPROVAL	PROJECT ENGINEER	CERTIFIED FOR CONSTRUCTION
R. A. ZIEMINSKI 11-01-93	R. C. EMERTON 11-01-93	W. PICKLES 05-18-94

SCALE: NONE

PARENT DATA PACKAGE PROJECT DRAWING NUMBER	WBS	TASK PROJECT NO.	DRAWING SIZE CODE NO.	SHEET NO.	REV NO.
CRU4/P085	1.1.1.1.4.3.1	00-90701	94X-5900-N-00270	N0000	8

000034

628

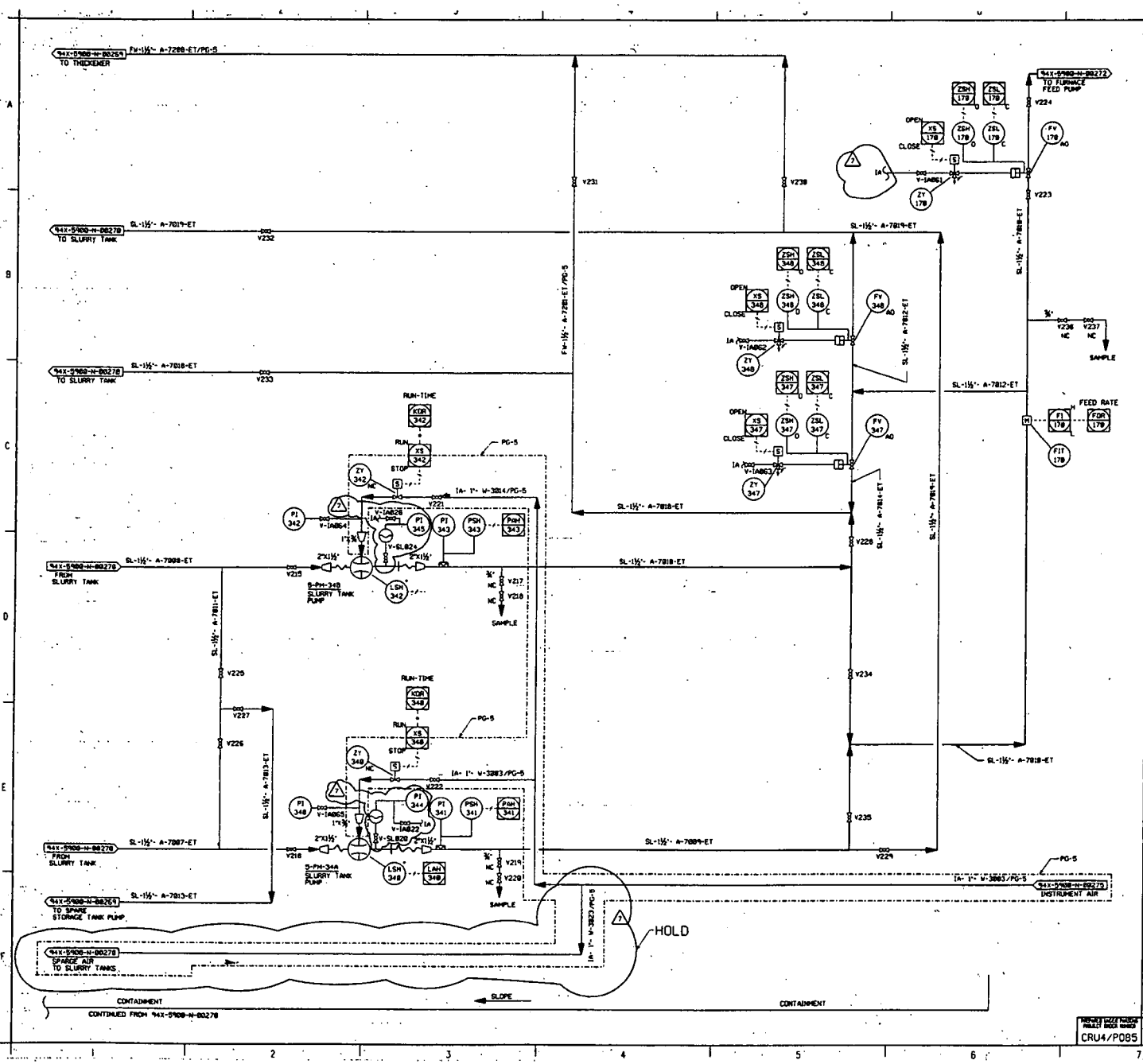

NOTES

1. FOR DRAWING INDEX SEE DRAWING 94X-5900-X-00353.
2. FOR SYMBOLS AND LEGEND SHEET SEE DRAWING 94X-5900-N-00268.
3. INSULATE AND ELECTRIC HEAT TRACE ALL VENTS, DRAINS AND SAMPLE LINES THRU LAST VALVE OR HIGH PART OF LINE AS APPLICABLE FOR ALL SYSTEMS WHERE HEADER OR VESSEL IS HEAT TRACED.
4. ALL PIPING AND EQUIPMENT ARE PERFORMANCE GRADE 4 (PG-4), AS INDICATED ON THE PERFORMANCE GRADE CHART SHOWN ON 94X-5900-N-00268, UNLESS OTHERWISE NOTED.
5. DACS INTERLOCKS ARE SHOWN ON THE FOXBORO LOGIC SKETCHES.

FOR INFORMATION ONLY

LAST VALVE NUMBER	V237

REFER DWG NO.	REFERENCE DWG TITLE
94X-5900-X-00353	DRAWING INDEX SHEET 1 OF 4
94X-5900-N-00268	SYMBOLS AND LEGEND SHEET
94X-5900-N-00269	DEWATERING
94X-5900-N-00278	FEED PREPARATION SHEET 1 OF 2
94X-5900-N-00274	WASTEWATER TREATMENT
94X-5900-N-00275	UTILITIES
94X-5900-N-00272	FURNACE AND GEM MACHINE

7	REVISED TO INCORPORATE PHASE 1B EDW. ADDED GRANGE AIR AND ADDED HOLD REVISED FROM WALKDOWN ADDED V-SL828, V-SL824, V-IA822, V-IA826, PI-344, PI-345, AND TWO DAMPENERS PER DCN 1636126	[illegible]	[illegible]	[illegible]
6	REVISED IN ACCORDANCE WITH FERMCO MARK-UPS OF THE FOXBORO DACS LOGIC N 271 REV B. ISSUED FOR CLIENT/OPERATIONAL REVIEW.			
5	FY178, FY347, & FY348 WERE GENERIC SYMBOLS - REVISED FROM WALKDOWN. YS348 & YS342 WERE OPEN & CLOSE - REVISED TO AGREE WITH REV B LOGICS. FRD178, KOR348 & KOR342 TOTALIZE SYMBOL DUPLICATION DELETED ADDED VALVES V-IA861 THRU V-IA866. ADDED HOSES	JB	N/A	12/9/93
4	ADDED REF TO HELTER PAID	JB 6-6-95	RKK	6-6-95
3	ADDED LINE NUMBER INFORMATION, NOTE 4 AND PG-5 BOUNDARIES	JB 05-12-95	RKK 05-12-95	
2	ADDED HOLD	APP 9-23-94	RKK 9-23-94	
1	GENERAL REVISIONS AND SCOPE CHANGE OF 2-24-94	RAZ 5/12/94	RE	5/17/94
0	APPROVED FOR CONSTRUCTION	RAZ 9-8-93	RCE 9-8-93	

UNITED STATES DEPARTMENT OF ENERGY
FERNALD ENVIRONMENTAL MANAGEMENT PROJECT

THIS DRAWING PREPARED BY
PARSONS
THE RALPH M. PARSONS CO. - PARSONS MAIN, INC. - ENGINEERING-SCIENCE, INC.
CINCINNATI, OHIO

Figure A-4 DESIGN

DRAWING TITLE
MECHANICAL PROCESS
PIPING AND INSTRUMENTATION DIAGRAM
FEED PREPARATION SHEET 2 OF 2

DRAWN BY	DATE	CLUB CHECKED	DATE	CHECKED BY	DATE
J.C. BREWER	08-23-93	RALEIGH CHANTOUS	09-08-93	DONALD E. JOHNSON	09-01-93

PLANT/BLDG NO.	FLOOR	SCALE
		NONE

SUBMITTED FOR APPROVAL	PLANT ENG APPROVAL	CERTIFIED FOR CONSTRUCTION
R.A. ZIEMINSKI 11-01-93	R.C. EMERTON 11-01-93	W. PICKLES 05-18-94

PROJECT UNIT/SYSTEM/PROJECT/INDEX NUMBER	SITE PROJECT NO.	TOP PROJECT NO.	DRAWING INDEX CODE NO.	SHEET NO.	REV NO.
CRU4/P085		WBS 1.1.1.1.4.3.1 00-90701	94X-5900-N-00271	N0005	7

000035

628

Revision	By	Date
0	KSS	11/14/95
1	KSS	2/9/96
2	KSS	6/4/96

Title: N270 Logic

Author: Scott St

Approved: DR Jaskolski

Sheet: 6 of 6

EDC 628

(11)

(Sh. 1) (N 269, Sh. 2) (N530, Sh. 6)

Level LO-LO (LSLL-290) (B25) 021053 (19-320)	I 1
Level HI-HI (LSHH-290) (B25) 021054 (18-320)	I 2

LA-290 L345 (DO5) Slurry Tank A Level

(Sh. 1) (N 269, Sh. 2) (N530, Sh. 6)

Level LO-LO (LSLL-291) (B25) 021057 (23-320)	I 1
Level HI-HI (LSHH-291) (B25) 021058 (22-320)	I 2

LA-291 L346 (DO5) Slurry Tank B Level

L258/L377 (DO5)

LI-290 Slurry Tank A Level

023034 (05/41) (BO8-05)

LAH

L268/L378 (DO5)

LI-291 Slurry Tank B Level

023041(06/42) (BO9-4)

LAH

L257/L357L367/L375 (DO5/DO7)

WI-291 Slurry Tank A Weight

023024 (07/01) (BO9-5)

WAH WAL (N530, Sh. 6)

L267/L358/L368/L376 (DO5/DO7)

WI-292 Slurry Tank B Weight

023031 (08/02) (B10-4)

WAH (N530, Sh. 6) WAL

FOR INFORMATION ONLY

R712

FQR-290 Slurry Tanks Feed

2-B15

R842

ZQR-051 Slurry Tank A Agit. RT

021046 B44

R843

ZQR-052 Slurry Tank B Agit. RT

021048 B45

Figure A-5

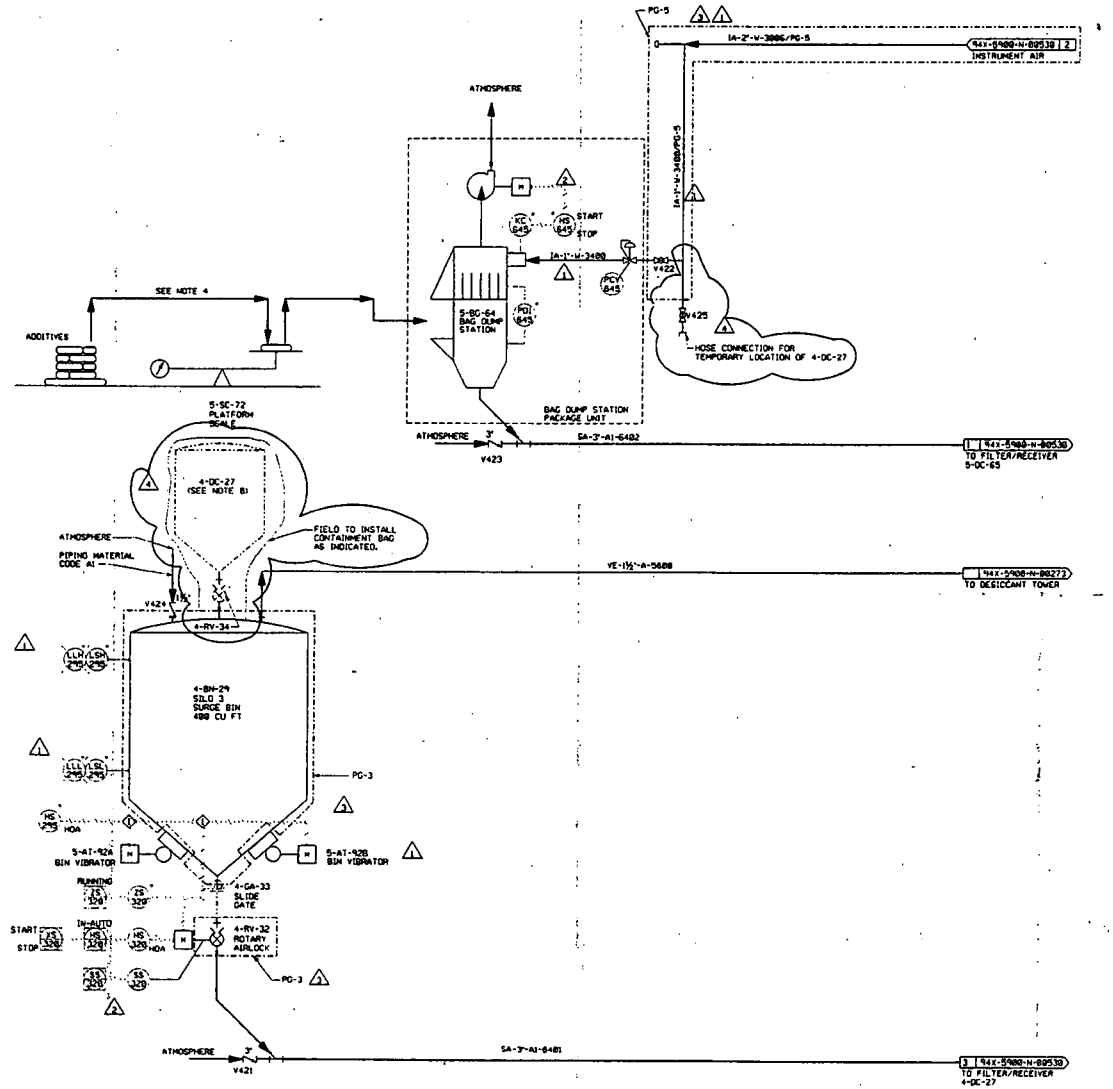

NOTES

1. SEE DRAWING 94X-5900-X-00353 FOR DRAWING INDEX.
2. SEE DRAWING 94X-5900-N-00268 FOR SYMBOLS AND LEGEND SHEET.
3. EQUIPMENT IN PHANTOM IS THE SAME EQUIPMENT USED FOR REMOVING THE MATERIAL FROM SILO 3.
4. ADDITIVE BAGS WILL BE PLACED MANUALLY ON THE PLATFORM SCALE AND WEIGHED. BAGS WILL THEN BE TRANSPORTED AND SLIT OPEN MANUALLY INSIDE THE BAG DUMP.
5. "*" INDICATES INSTRUMENT SUPPLIED BY EQUIPMENT VENDOR.
6. INSTRUMENTS CONNECTED AND ASSOCIATED WITH THE EQUIPMENT SHOWN IN PHANTOM SHALL BE FURNISHED UNDER THE SILO 4 WASTE REMOVAL & TRANSPORTING SYSTEM PROJECT (PQPD).
7. ALL PIPING AND EQUIPMENT ARE PERFORMANCE GRADE 4 (PG-4L) AS INDICATED ON THE PERFORMANCE CHART SHOWN ON 92X-5900-N-00268, UNLESS OTHERWISE NOTED.
8. TEMPORARY LOCATION OF SILO 3 FILTER/RECEIVER WITH ASSOCIATED CONTROLS AND ROTARY AIRLOCK.

FOR INFORMATION ONLY

LAST VALVE NO. V425

REF DWG NO.	DRAWING TITLE
94X-5900-N-00268	SYMBOLS AND LEGEND SHEET
94X-5900-N-00353	DRAWING INDEX SHEET 1 OF 4
94X-5900-N-00530	SILO 3 MATERIAL TRANSFER
94X-5900-N-00273	OFF-GAS TREATMENT

REV NO	REVISION DESCRIPTION	INITIALS AND DATE
4	ADDED TEMPORARY LOCATION OF 4-DC-27 AND HOSE CONNECTION FOR 4-DC-27 & NOTE 8	
3	ADDED PERFORMANCE GRADE TO LINE NUMBERS AND EQUIPMENT. ADDED NOTE 7	JB 05-12-95 RKK 05-12-95
	ADDED PG-3 AND PG-5 BOUNDARIES	
2	DELETED HS646 PER VENDOR DRAWINGS REMOVED IN-AUTO & HOA ON SS328'S	APP 01-94 RKK 02-94
1	GENERAL REVISIONS AND SCOPE CHANGE OF 2-24-94	RAZ 5/13/94 RC RE 5/13/94
0	APPROVED FOR CONSTRUCTION	RAZ 8-8-93 RCE 8-9-93

UNITED STATES
DEPARTMENT OF ENERGY
FERNALD ENVIRONMENTAL MANAGEMENT PROJECT

THIS DRAWING PREPARED BY
PARSONS
THE RALPH M. PARSONS CO. - PARSONS MAIN, INC. - ENGINEERING-SCIENCE, INC.
CINCINNATI, OHIO

Figure A-6

DRAWING TITLE
MATERIAL HANDLING
PIPING & INSTRUMENTATION DIAGRAM
ADDITIVE TRANSFER

DRAWN BY	DATE	CHK'D BY	DATE	SUPERV BY	DATE
T. EBELING	08-05-93	T. EBELING	08-05-93	D. OYLER	08-05-93

PLANT/BLDG NO. | FLOOR | SCALE NONE | DWG NO.

SUBMITTED FOR APPROVAL: R. A. ZIEMOWSKI 11-01-93
PROJECT ENG APPROVAL: R. C. EMERTON 11-01-93
CERTIFIED FOR CONSTRUCTION: W. PICKLES 05-18-94

PROJECT UNIT/CODE PROJECT ORDER NUMBER	FOR PROJECT NO.	DRAWING TYPE CODE NO.	SHEET NO.	REV NO
CRU4/P085	WBS 00-90701	94X-5900-N-00529	N0011	4

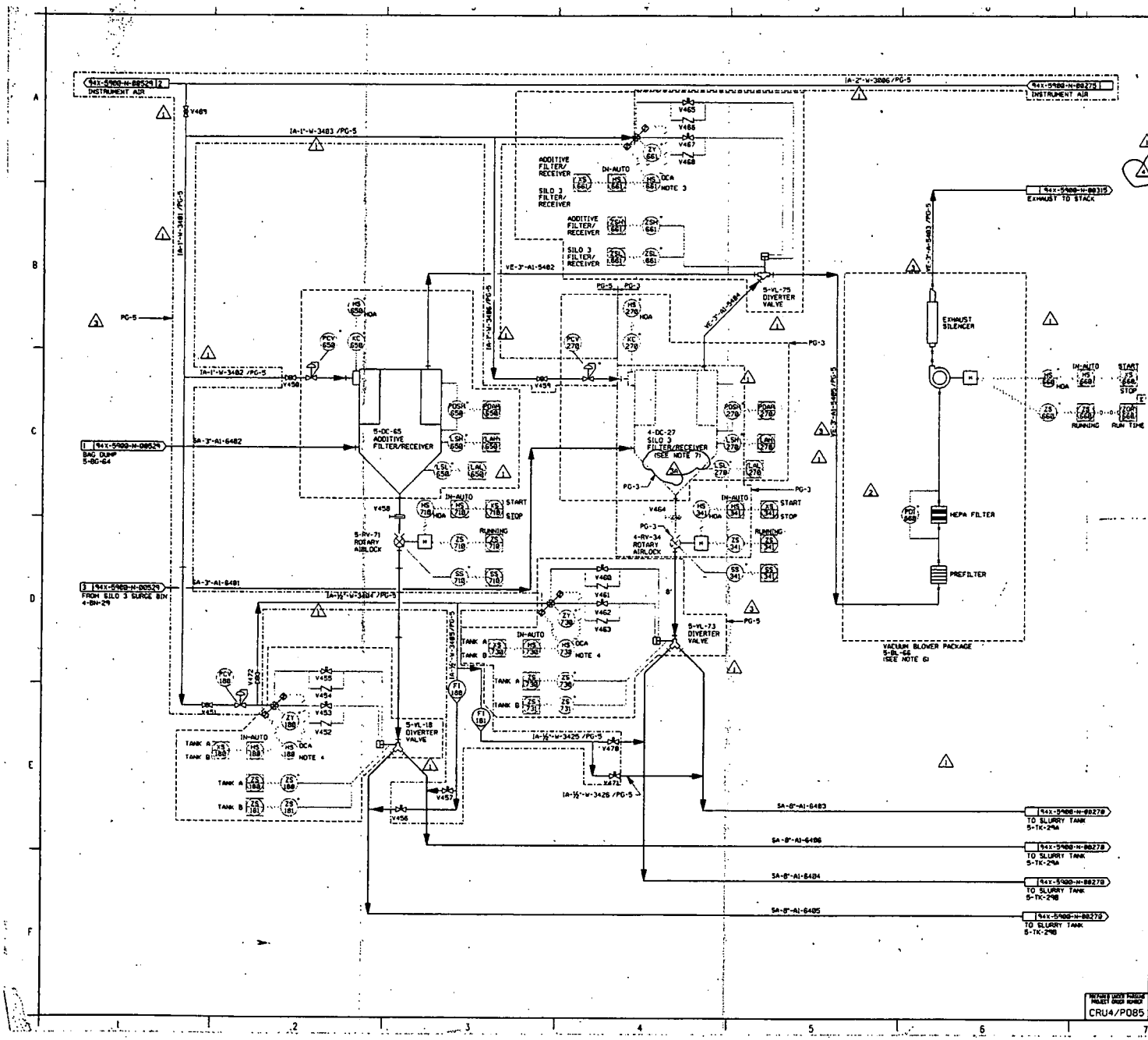

NOTES

1. SEE DRAWING 94X-5900-X-00353 FOR DRAWING INDEX SHT 1 OF 4
2. SEE DRAWING 94X-5900-N-00268 FOR SYMBOLS AND LEGEND SHEET.
3. HS661 SELECTS BETWEEN ADDITIVE FILTER/RECEIVER, SILO 3 FILTER/RECEIVER, OR AUTO.
4. SELECTS BETWEEN SLURRY TANK A, SLURRY TANK B, OR AUTO.
5. "*" INDICATES INSTRUMENT SUPPLIED BY EQUIPMENT VENDOR.
6. VACUUM BLOWER PACKAGE TO BE A SELF-CONTAINED MOBILE PACKAGE.
7. 4-DC-27 (SHOWN IN PHANTOM) WILL BE USED FIRST FOR REMOVING MATERIAL FROM THE SUPERSUCKER TRUCK INTO 4-BN-29, THEN MOVED TO ITS PERMANENT LOCATION SHOWN ON THIS DRAWING. FOR TEMPORARY LOCATION ABOVE 4-BN-29, SEE DRAWING 94X-5900-N-00524.
8. ALL PIPING AND EQUIPMENT ARE PERFORMANCE GRADE 4 (PG-4) AS INDICATED ON THE PERFORMANCE GRADE CHART SHOWN ON 92X-5900-N-00268, UNLESS OTHERWISE NOTED.

FOR INFORMATION ONLY

LAST VALVE NO. V471

REF DWG NO.	DRAWING TITLE
94X-5900-N-00268	SYMBOLS AND LEGEND SHEET
94X-5900-X-00353	DRAWING INDEX SHEET 1 OF 4
94X-5900-N-00278	FEED PREPARATION
94X-5900-N-00529	ADDITIVE TRANSFER
94X-5900-N-00275	UTILITIES
94X-5900-N-00315	OFF-GAS AIR

4	REVISED NOTE 7		
3	ADDED PERFORMANCE GRADE TO LINE NUMBERS AND EQUIPMENT, ADDED NOTE 8	JB 05-12-95	RKK 05-12-95
2	DELETED PCV660 AND INLET SILENCER PER VENDOR DATA	APP 9-28-94	RCK 9-28-94
1	GENERAL REVISIONS AND SCOPE CHANGE OF 2-24-94	RAZ 5-9-94	RE 5-9-94
0	APPROVED FOR CONSTRUCTION	RAZ 9-8-93	RCE 9-8-93

UNITED STATES DEPARTMENT OF ENERGY
FERNALD ENVIRONMENTAL MANAGEMENT PROJECT

THIS DRAWING PREPARED BY
PARSONS
THE RALPH M. PARSONS CO. - PARSONS MADI, INC. - ENGINEERING-SCIENCE, INC.
CINCINNATI, OHIO

Figure A-7

DRAWING TITLE
MATERIAL HANDLING
PIPING & INSTRUMENTATION DIAGRAM
SILO 3 MATERIAL TRANSFER

DRAWN BY	DATE	CLEAR DRAWER	DATE	CHECKED BY	DATE
T. EIDELING	08/04/93	T. EIDELING	08/04/93	D. O'KEEFFE	08/05/93

SCALE: NONE

SUBMITTED FOR APPROVAL	FENCE CAU APPROVAL	CERTIFICATION
R. A. ZIEMINSKI 11-01-93	R. C. EMERTON 11-01-93	W. PICKELS 5-18-94

SUB PROJECT NO.	TASK PROJECT NO.	DRAWING SUBJ CODE NO.	SHEET NO.	REV NO.
	WBS 1.1.1.1.4.3.1 00-90701	94X-5900-N-00530	N0012	4

PROJECT UNDER PARSONS PROJECT ORDER NUMBER: CRU4/P085

000038

628

FIGURE A-7

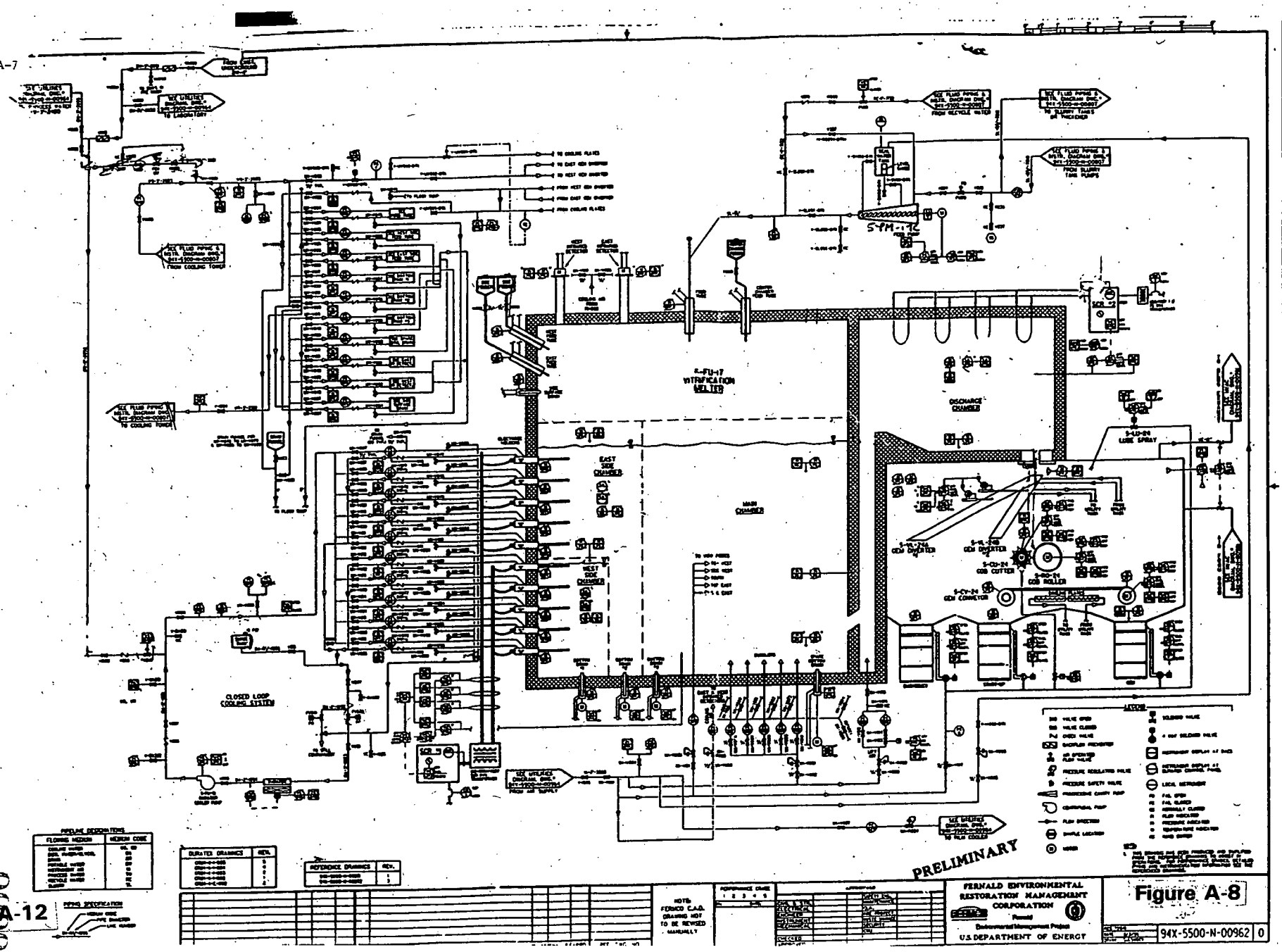

000039

94xn0962.m(2447.ws15) steve@ws15. Mon Feb 12 09:18:57 EST 1996

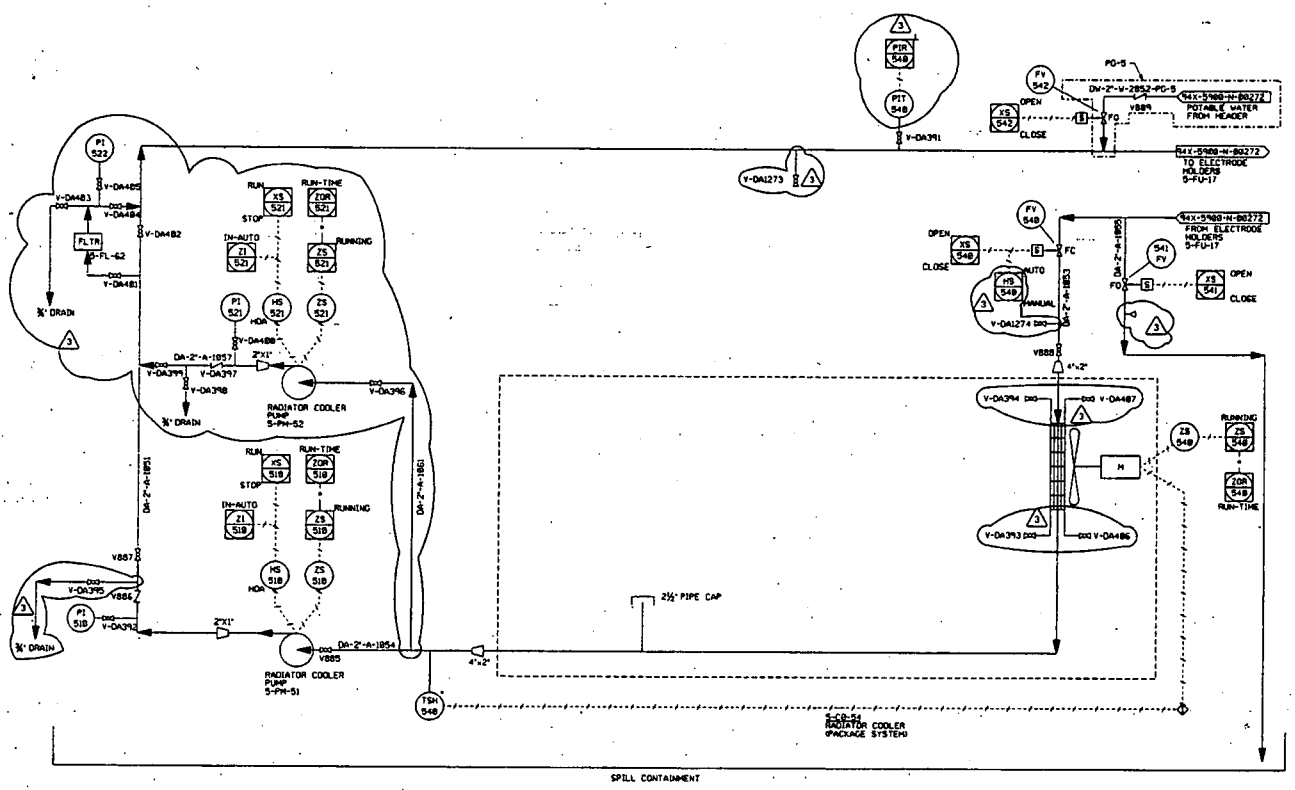

NOTES

1. FOR DRAWING INDEX SEE DRAWING 94X-5900-X-00353.
2. FOR SYMBOLS AND LEGEND SHEET SEE DRAWING 94X-5900-N-00268.
3. '+' INDICATES INSTRUMENT PROVIDED WITH PACKAGE.
4. ALL PIPING AND EQUIPMENT ARE PERFORMANCE GRADE 4 (PG-4), AS INDICATED ON THE PERFORMANCE GRADE CHART SHOWN ON 94X-5900-N-00268, UNLESS OTHERWISE NOTED.
5. COOLING MEDIUM IS APPROXIMATELY 50 % BY WEIGHT DISTILLED WATER AND INHIBITED PROPYLENE GLYCOL.
6. DACS INTERLOCKS ARE SHOWN ON THE FOXBORO LOGIC SKETCHES.

LAST VALVE NUMBER	V889

REFER DWG NO.	REFERENCE DWG TITLE
94X-5900-X-00353	DRAWING INDEX SHEET 1 OF 4
94X-5900-N-00268	SYMBOLS AND LEGEND SHEET
94X-5900-N-00272	FURNACE AND GEN MACHINE

REV. NO.	ISSUE OF REVISION PURPOSE - DESCRIPTION	A/E	PERMIT	DATE
3	REVISED FROM WALKDOWN; LOOPS 521, 522, 548 ADDED VALVES V-DA393 THRU V-DA487 V-DA1273 & V-DA1274, INCORPORATED DCN's 114, AND 127 REV. 3; ADDED RC PUMP + S-PM-52 AND ASSOCIATED COMPONENTS (LOOP 521 & 522); REVISED ZI548 TO HS548, PS548 TO PIT 548, AND PAL548 TO PIR548.	[illegible]	N/A	[illegible]
2	REVISED IN ACCORDANCE WITH FERMCO MARK-UPS OF THE FOXBORO DACS LOGIC N 891 REV 1, ISSUED FOR CLIENT/OPERATIONAL REVIEW.	MRR FOR APP	N/A	2/21/96
1	LOOPS 518, 548, & 541 - REVISED TO AGREE WITH REV 0 LOGICS; RELOCATED SURGE TANK	KDH FOR MR		12/28/95
	& LOOP 538 TO 94X-5900-N-00272; ADDED REDUCERS, ADDED VALVES V-DA391 & V-DA392			
	DELETED HS548			
0	ISSUED FOR CONSTRUCTION	JB 6-16-95	RKK	6-16-95

UNITED STATES
DEPARTMENT OF ENERGY
FERNALD ENVIRONMENTAL MANAGEMENT PROJECT

THIS DRAWING PREPARED BY
PARSONS
THE RALPH M. PARSONS CO. - PARSONS MAIN, INC. - ENGINEERING-SCIENCE, INC.
CINCINNATI, OHIO

Figure A-9

DRAWING TITLE
MECHANICAL PROCESS
PIPING AND INSTRUMENTATION DIAGRAM
ELECTRODE HOLDERS COOLING SYSTEM

DRAWN BY	DATE	LEAD DESIGNER	DATE	CHECKED BY	DATE
P.A. WILSON	5/26/95			J.L.COOPER	6-15-95
PLANT/AREA NO.		FLOOR		SCALE: NONE	SCALE

SUBMITTED FOR APPROVAL	FERMCO ENG APPROVAL	
J. BOOTLE 6-16-95	ROBERT K. KING 6-16-95	R.K.KING (D.A.)KIDDING 6-16-95

DOE PROJECT NO.	FEMP PROJECT NO.	DRAWING INDEX CODE NO.	SHEET NO.	REV. NO.
	WBS 00-90701	94X-5900-N-00891	N0067	3

000040

628

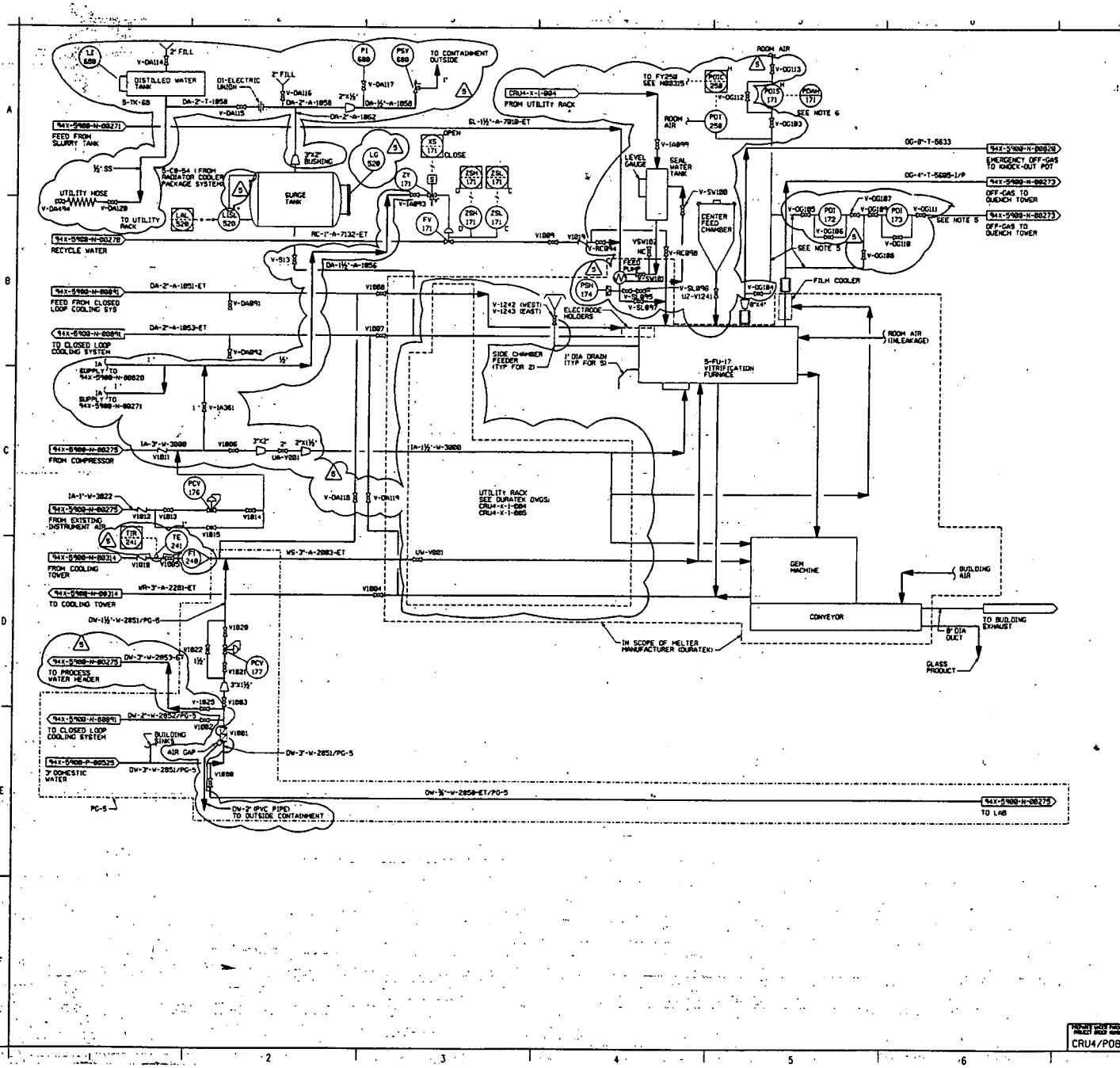

NOTES

1. FOR DRAWING INDEX SEE 94X-5900-X-00353.
2. FOR SYMBOLS & LEGEND SHEET SEE DRAWING 94X-5900-N-00268.
3. ALL PIPING AND EQUIPMENT ARE PERFORMANCE GRADE 4 (PG-4) AS INDICATED ON THE PERFORMANCE GRADE CHART SHOWN ON 94X-5900-N-00268, UNLESS OTHERWISE NOTED.
4. INSTRUMENTATION FOR THE MELTER MANUFACTURER WILL BE REFLECTED ON THE CERTIFIED VENDOR PRINTS FROM DURATEK.
5. SIGNAL LINE SHALL BE INSULATED FOR PERSONNEL PROTECTION.
6. PDAH171 IS LOCATED IN THE DURATEK MELTER CONTROL PANEL.
7. '*' INDICATES INSTRUMENT PROVIDED WITH PACKAGE.
8. DACS INTERLOCKS ARE SHOWN ON THE FOXBORO LOGIC SKETCHES.

LAST VALVE NUMBER V1022

REF DWG NO.	DRAWING TITLE
94X-5900-X-00353	DRAWING INDEX - SHEET 1 OF 4
94X-5900-N-00268	SYMBOLS AND LEGEND SHEET
94X-5900-N-00270	FEED PREPARATION SHEET 1 OF 2
94X-5900-N-00271	FEED PREPARATION SHEET 2 OF 2
94X-5900-N-00273	OFF GAS TREATMENT
94X-5900-N-00275	UTILITIES
94X-5900-N-00314	PROCESS COOLING WATER
94X-5900-N-00525	PLUMBING AND FIRE PROTECTION PLAN PILOT PLANT
94X-5900-N-00620	EMERGENCY OFF-GAS SYSTEM
94X-5900-N-00891	ELECTRODE HOLDERS COOLING WATER SYSTEM

FOR INFORMATION ONLY

REV NO.	REVISION DESCRIPTION	DRAWN	CHECKED	DATE
5	REVISED FROM WALKDOWN; LOOPS 171, 172, 173, 174, 241, 258, 526, & 888, ADDED ISOLATION VALVES TO PDIS171, PDI172 & PDI173, RELOCATE LOOP 241 FROM N00314, REVISED LSL526 AND LI529 TO LSL528 AND LI528, ADDED PSV680, INCORPORATED DCN # 16361127 REV. 3 AND 16361?5, ADDED AIR GAP AND DRAIN TO V1881, ADDED L1888/P1888/PSV688, INCORPORATED DCN # 16361152, ADDED PDT258,PDIC258 AND CONTINUATION REFERENCE, ADDED VALVES *5.		N/A	2/8/96
4	REVISED IN ACCORDANCE WITH FERMCO MARK-UPS OF THE FOXBORO DACS LOGIC N 272 REV. B. ISSUED FOR CLIENT/OPERATIONAL REVIEW.	MRR FOR MPP	N/A	2/23/96
3	ADDED EXPANSION JOINTS, ADDED V-DA891 AND V-DA892, ADDED LI528, ADDED NOTE 7, ADDED "D" TO ZSH171 & "C" TO ZSL171, RELOCATED SURGE TANK W/LSL528 & LAL528, DA-1½"-A-1856-ET, PI-248, REVISED LINE WR-2"-A-2281-ET, ADDED V-IA893	KDH FOR HR		12/20/95
2	REVISED LN 5833 WAS 4" & ADDED REDUCER, RELOCATED V1896 & V1805, DELETED BLOCK & BY-PASS VALVES FOR PV171 & REDUCERS FOR PCV176	JB	N/A	9/19/95
1	REVISED PER DCN 814, DELETED INTERFACE CABINET, ADDED PCV176 & PCV177 WITH BLOCK AND BYPASS VALVES, PV171 WITH BLOCK AND BYPASS VALVES AND DCS INTERFACES. REVISED MELTER VENDOR PACKAGE LIMITS, REVISED PER DCN 37, ADDED PDIS171, 172, 173, & NOTES 5 & 6	JB	N/A	9/19/95
0	ISSUED FOR CONSTRUCTION	JB 5/16/95	RKK	6/16/95

UNITED STATES
DEPARTMENT OF ENERGY
FERNALD ENVIRONMENTAL MANAGEMENT PROJECT

THIS DRAWING PREPARED BY
PARSONS
THE RALPH M. PARSONS CO. - PARSONS MAIN, INC. - ENGINEERING-SCIENCE, INC.
CINCINNATI, OHIO

Figure A-10

DRAWING TITLE
MECHANICAL PROCESS
PIPING AND INSTRUMENTATION DIAGRAM
FURNACE AND GEM MACHINE

DRAWN BY	DATE	LEAD DESIGNER	DATE	CHECKED BY	DATE
K.MEISSNER	8-8-95	S. GHANTOUS	8/16/95	S. GHANTOUS	8-8-95

SUBMITTED FOR APPROVAL	PROJECT ENG. APPROVAL	ISSUED FOR CONSTRUCTION
J. BOOTLE 6/16/95	R. K. KING 6/16/95	RKK FOR P. NIXON 6/16/95

PROJECT LEVEL PRODUCT PROJECT GROUP NUMBER: CRU4/P085
SITE PROJECT NO.: WBS 1.1.1.1.1.1.1 00-90701
TOP PROJECT NO.:
DRAWING INDEX CODE NO.: 94X-5900-N-00272 N0068
SHEET NO.:
REV NO.: 5

00000041

F28

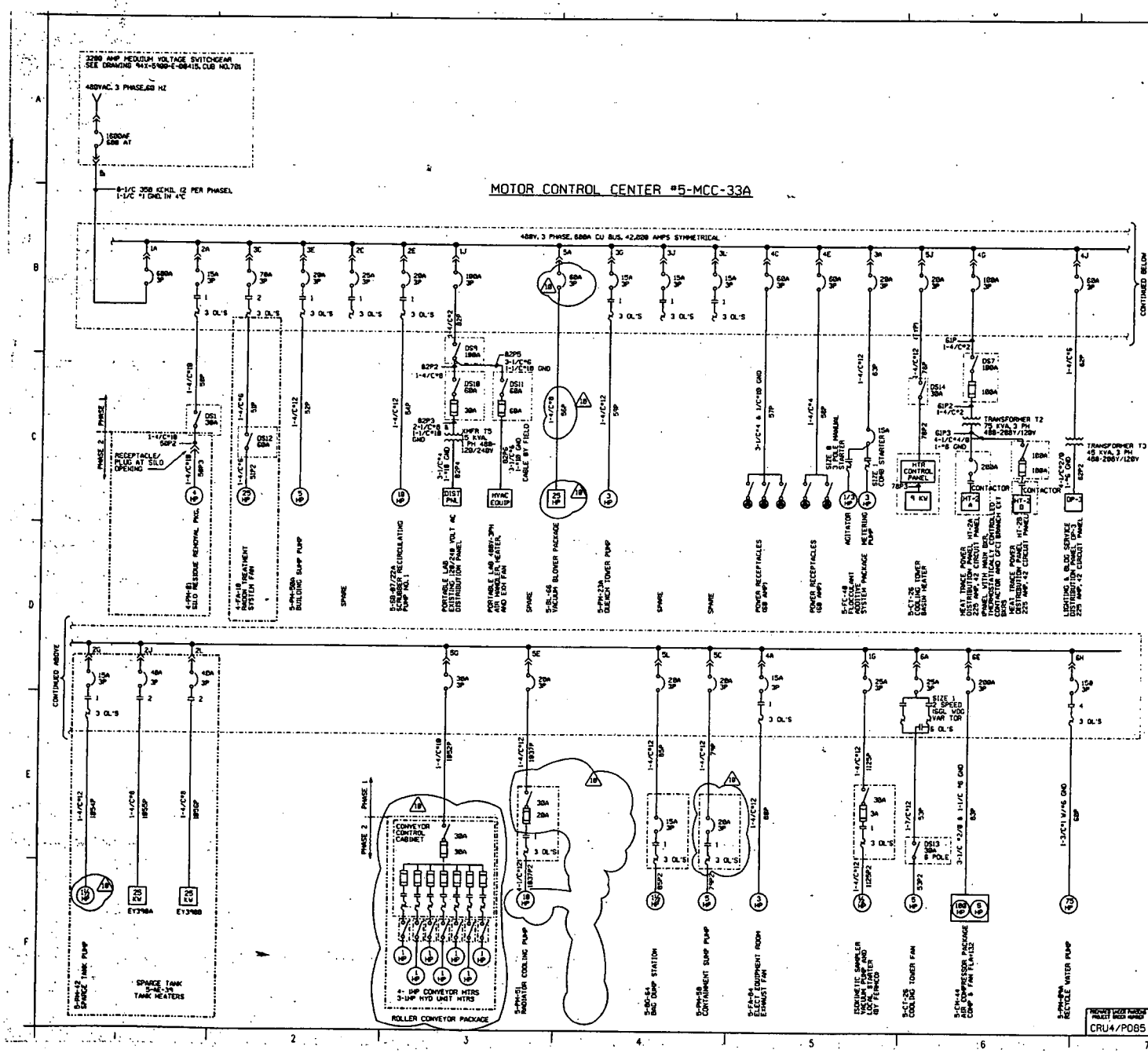

NOTES

1. SEE DRAWING 94X-5900-X-00353 FOR DRAWING INDEX.
2. SEE DRAWING 94X-5900-E-00441 FOR CABLE SCHEDULE
3. EQUIPMENT AND/OR WIRING ENCLOSED BY [illegible] IDENTIFIES PHASE 2 CONSTRUCTION.

	1	2	3	4	5	6
A		4PH81 SIZE 1	5FC48 CKT BKR 20A	5FA84 SIZE 1	5BL66 CKT BKR 20A	5CT26 SIZE 1 2 SPEED
B	MAIN CKT BKR 600A					
C		SPARE SIZE 1	4FA18 SIZE 2	PWR RECP CKT BKR 60A	5PH54 CKT BKR 20A	
D						
E	SPARE CKT BKR	2B07/22A SIZE 1	PH58A SIZE 1	PWR RECP CKT BKR 60A	5PH51 CKT BKR 20A	5CH44 CKT BKR 200A
F						
G	ISOKIN SAMP PMP SIZE 1	PH42 SIZE 1	PH23A SIZE 1	TRANS T2 CKT BKR 100A	SPARE CKT BKR 30A	
H						
J	LAB BLDG CKT BKR 100A	EY3798A SIZE 2	SPARE SIZE 1	TRANS T3 CKT BKR 60A	5CT26 HTR CKT BKR 20A	5PH29A SIZE 4
K						
L		EY3798B SIZE 2	SPARE SIZE 1	SPARE SIZE 1	5BC64 CKT BKR 20A	SPACE
M						

MOTOR CONTROL CENTER #5-MCC-33A

COMPARTMENT LAYOUT
SCALE : NTS

REF DWG NO.	DRAWING TITLE
94X-5900-X-00353	DRAWING INDEX - SHEET 1 OF 4
94X-5900-E-00415	SINGLE LINE DIAGRAM
94X-5900-E-00441	CABLE SCHEDULE (5BP - 85P)
94X-5900-E-00816	CABLE SCHEDULE (5BC TO 1B4BC)

FOR INFORMATION ONLY

REV NO.	REVISION DESCRIPTION	DRAWN BY	CHECKED BY	DATE
10	REV. 5-BL-66 HP, WIRE & CKT BKR PER DCN 1636/72 REV 1; REV 5-PH-51 HP & CKT BKR, MOVED 5-CD-54 TO MCC 8 PER DCN 1636/127 R2 REV 5-PH-58 STARTER PER DCN 1636/148, REV 5-PH-42 HP & CONV PKG PER WALKDOWN	[illegible]	N/A	4/4/95
9	DRAWING REVISED PER AS BUILT CONDITIONS	APP 6/6/95	NA	
8	DELETED 5-AT-42A & B ADDED ISOKINETIC SAMPLER PUMP PER DCN-826	JB	NA	1/19/95
7	IDENTIFIED PHASE 2 CONSTRUCTION PER FERMCO ECN VPP-807	APP 5/1/95	NA	NA
6	ADDED 5-PH-51 & CD-54 FEEDER AND 20A BKR TO CUBICLE 5E; REPORTED HOLD FROM E7/30A & B AND 5-PH-42; ADDED HOLD TO DRGM CONV'RS & HYD UNIT	HRR 5/20/95	RKK	5/20/95
5	ADDED SPARGE TANK PUMP & HEATERS TO CUBICLES 2C, 2J, & 2L; CHG'D 7HP TO 5HP	JB 5/1/95	RKK	5/1/95
4	5G WAS SPARE; GF WAS 150A, 75HP, 4/C#1	JB 1/25/95	RKK	1/25/95
3	MOVED BLDG LOADS TO PP-1; DELETED BKRS & REV CUBICLES 1G,3A,4L,5A,5C,5E,5G,5J,5L,6GA	JB 10/26/95	RKK	10/26/95
2	REVISIONS PER VENDOR INFORMATION SEE REVISION NOTE 2 FOR LIST OF CHANGES	JB 12/2/94	RKK	12/2/94
1	DELETED 5-CB-80 & 5-CB-81 FROM MCC	JB 07/29/94	RE	07/29/94
0	APPROVED FOR CONSTRUCTION	RAZ 06/07/94	RE	06/09/94

UNITED STATES
DEPARTMENT OF ENERGY
FERNALD ENVIRONMENTAL MANAGEMENT PROJECT

THIS DRAWING PREPARED BY
PARSONS
THE RALPH M. PARSONS CO. - PARSONS MAIN, INC. - ENGINEERING-SCIENCE, INC.
CINCINNATI, OHIO

Figure A-11 SIGN

DRAWING TITLE
ELECTRICAL
SINGLE LINE DIAGRAM
5-MCC-33A

DRAWN BY	DATE	LEAD CHECKER	DATE	CHECKED BY	DATE
R. G. PROSKI	06/03/94	T. FERRELL	06/07/94	J.L. COOPER	06/07/94

PERFORMED BY: R.A. ZIEMINSKI 06/07/94 — PROJECT ENGINEER: R.C. EMERTON 06/09/94 — CONSTRUCTION ENGINEER: V. PICKLES 06/09/94

PROJECT NO.	TOP PROJECT NO.	DRAWING NO.	REV. NO.
	WBS 1.1.1.4.3.1 00-90701	94X-5900-E-00416	E0004 10

PREPARED UNDER PARSONS PROJECT MANAGER CRU4/P085

000042

628

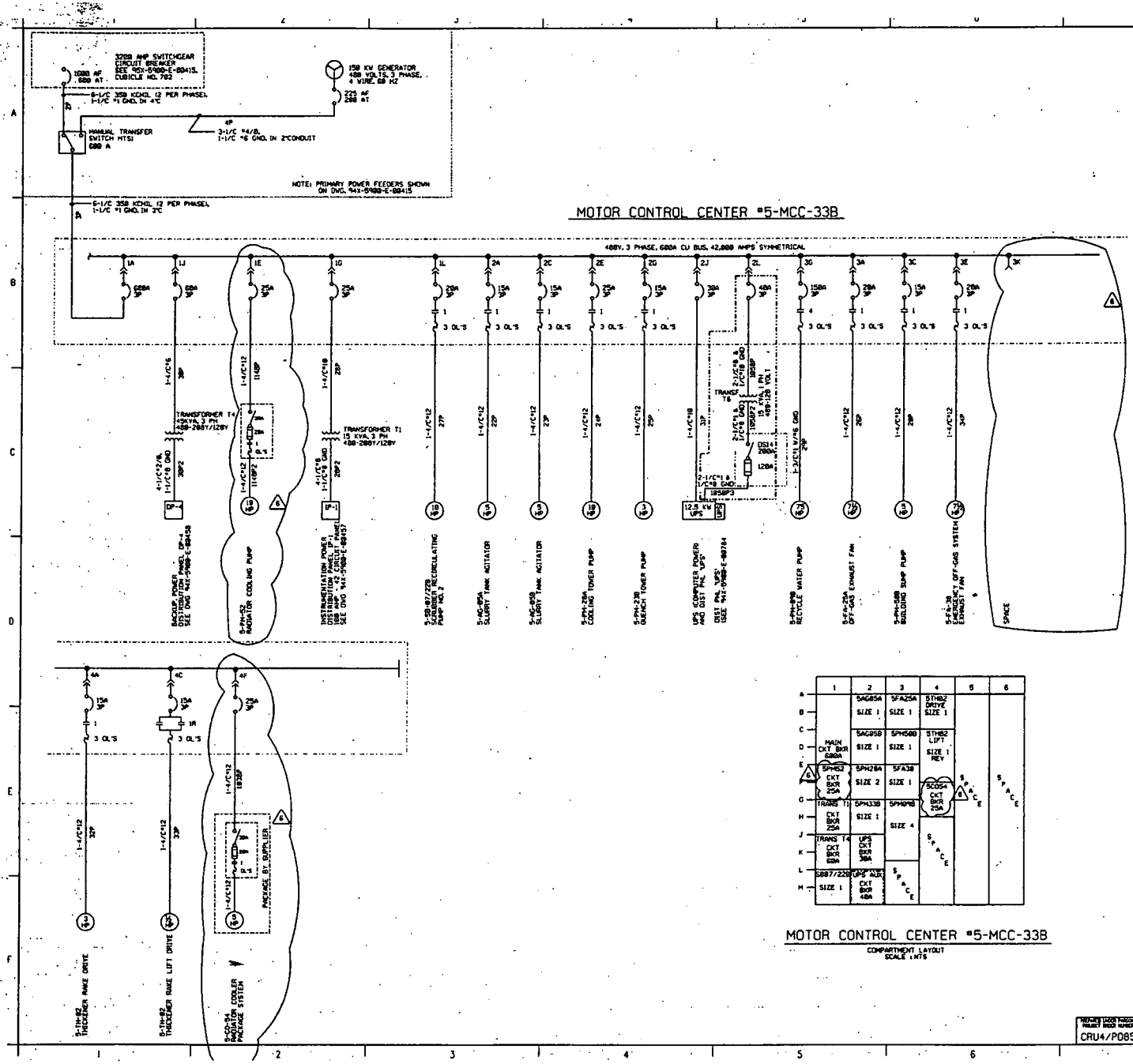

NOTES

1. SEE DRAWING 94X-5900-X-00353 FOR DRAWING INDEX.
2. SEE DRAWING 94X-5900-X-00412 FOR CONDUIT/CABLE SCHEDULE.
3. EQUIPMENT AND/OR WIRING ENCLOSED BY [ ] IDENTIFIES PHASE 2 CONSTRUCTION.

FOR INFORMATION ONLY

REF DWG NO.	DRAWING TITLE
94X-5900-X-00353	DRAWING INDEX - SHEET 1 OF 4
94X-5900-E-00415	SINGLE LINE DIAGRAM
94X-5900-E-00412	CONDUIT AND CABLE SCHEDULE
94X-5900-E-00457	PANEL SCHEDULES SHEET 1 OF 2
94X-5900-E-00458	PANEL SCHEDULES SHEET 2 OF 2
94X-5900-E-00784	INTERCONNECTION DIAGRAM DACS POWER DIST FROM UPS PANEL

REV NO.	REASON FOR REVISION - DESCRIPTION	DRAWN BY	CHECKED BY	APPROVED BY	DATE
6	ADDED 5-PH-52 & 5-CO-54 CIRCUITS PER DCN 1636x127, REVISED PER WALKDOWN	D.C.C.	N/A	N/A	9/9/96
5	DRAWING REVISED PER AS BUILT CONDITIONS	D.C.C.	NA		12/8/95
4	IDENTIFIED PHASE 2 CONSTRUCTION PER FERMCO ECN VPP-087		NA		3/1/95
3	ADDED UPS ALTERNATE FEED TO CUBICLE 2L UPS WAS 18 KV	HRR	RKK		3/28/95
2	ADDED 5-FA-38 TO CUBICLE 3E DELETED SPARE CKT BKR CUBICLE 1GR	JB	RKK		3/14/95
1	MOVED THICKENER STARTER & ADDED RAKE LIFT REV HP, STARTER & WIRE SIZE PER VENDOR INFO	JB	RKK		12/2/94
0	APPROVED FOR CONSTRUCTION	JB	RE		10/3/94

UNITED STATES
DEPARTMENT OF ENERGY
FERNALD ENVIRONMENTAL MANAGEMENT PROJECT

THIS DRAWING PREPARED BY
PARSONS
THE RALPH M. PARSONS CO. - PARSONS MAIN, INC. - ENGINEERING-SCIENCE, INC.
CINCINNATI, OHIO

Figure A-12

DRAWING TITLE
ELECTRICAL
SINGLE LINE DIAGRAM
5-MCC-33B

DRAWN BY	DATE	LEAD ENGINEER	DATE	CHECKED BY	DATE
R.E. PROCUT	09/03/93	T. FERRELL	09/27/94	J.J. COOPER	09/02/94

PLANT/AREA NO. — FLOOR — SCALE: NONE

SUBMITTED FOR APPROVAL	PLANNER DAY APPROVAL	CONTRACT FOR CONSTRUCTION
J. BOOTLE 05/27/94	R.C. EMERTON 05/31/94	W. PICKLES 06/05/94

PROJECT UNION PLANNER	PROJECT UNION MANAGER	TEAM PROJECT NO.	DRAWING PROJECT CODE NO.	DRAWING NO.	REV NO.
CRU4/PD85		MDS 1.1.1.1.4.3.1 00-90701	94X-5900-E-00417	E0005	6

0000043

628

Revision	By	Date
0	KSS	11/14/95
1	KSS	1/3/96
2	KSS	1/9/96
3	KSS	3/9/96
4	KSS	3/26/96

Title: N 891 Logic

EDC

FOR INFORMATION ONLY

628

Author: S. Stevens

Approved: D L Jacobski

Sheet: 1 of 3

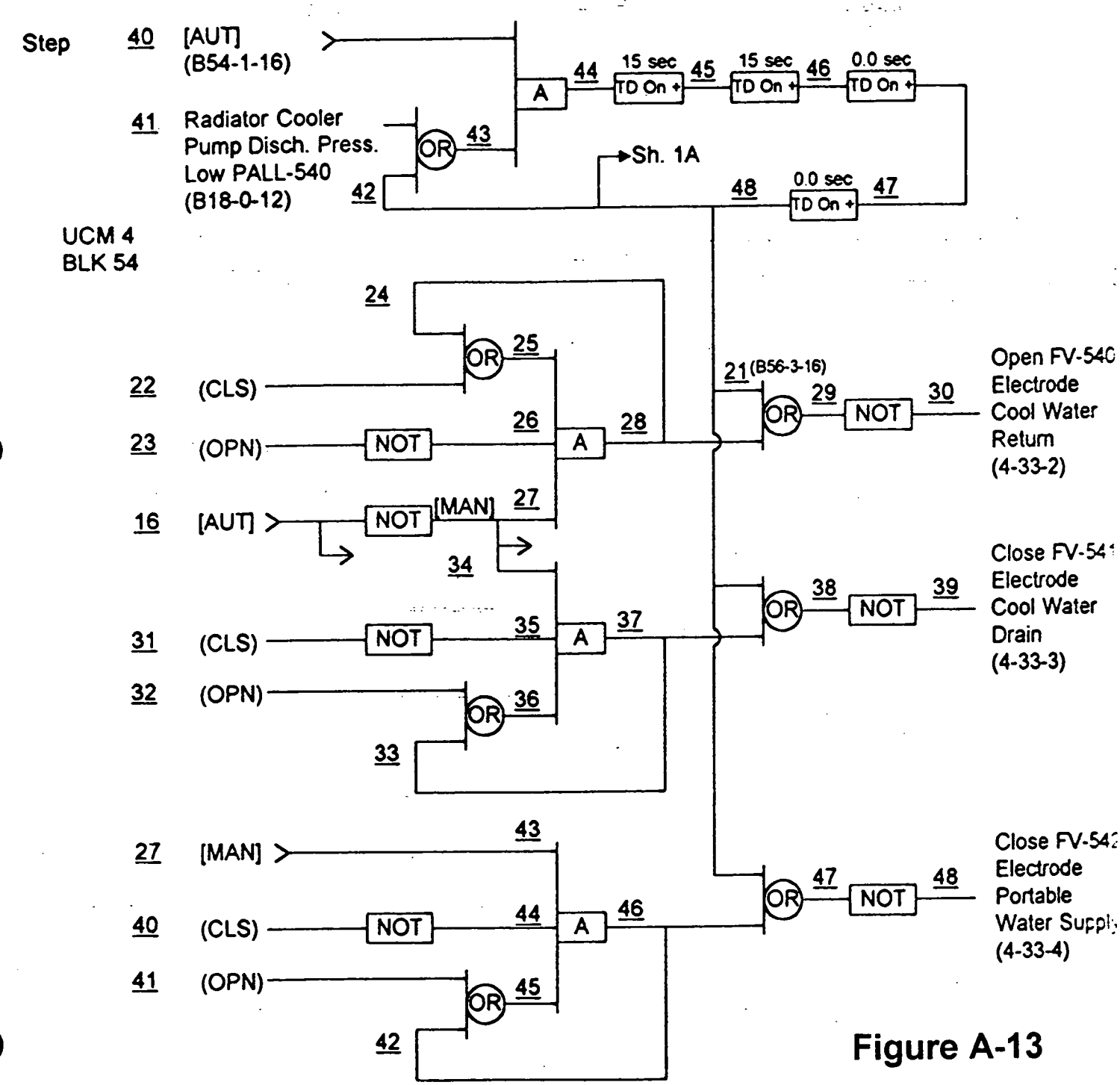

Figure A-13

Date: Oct. 19, 1995

000044

Revision	By	Date
0	KSS	11/14/95
1	KSS	1/9/96
2	KSS	3/26/96

Title: N 891 Logic

FOR INFORMATION ONLY

Author: S. Stevens KSS Sheet: 1A of 3

Approved: D. Jewitt

(1)

5-CO-54A R115		FV-540 R116 (D15)		FV-541 R117 (D15)		FV-542 R118 (D15)	
MAN/AUT (B54) 04-54-9-1	I 1	CLS/OPN (B33) 042032 (26-424)	I 1	OPN/CLS (B33) 042033 (27-424)	I 1	OPN/CLS (B33) 042034 (28-424)	I 1
	I 2		I 2		I 2		I 2
MAN/AUT (B54) 04-54-9-1	O	OPN/CLS (XS-540) (B25) 042032	O	OPN/CLS (XS-541) (B25) 042033	O	OPN/CLS (XS-542) (B25) 042034	O

(2) UCM 4
BLK 57

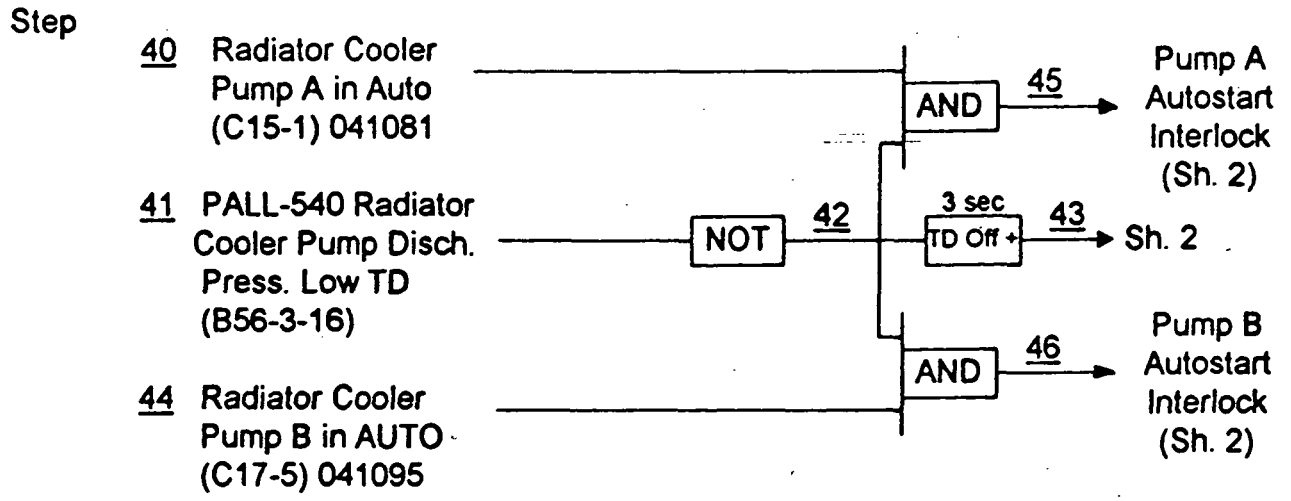

Figure A-14

000045

Date: Oct. 19, 1995

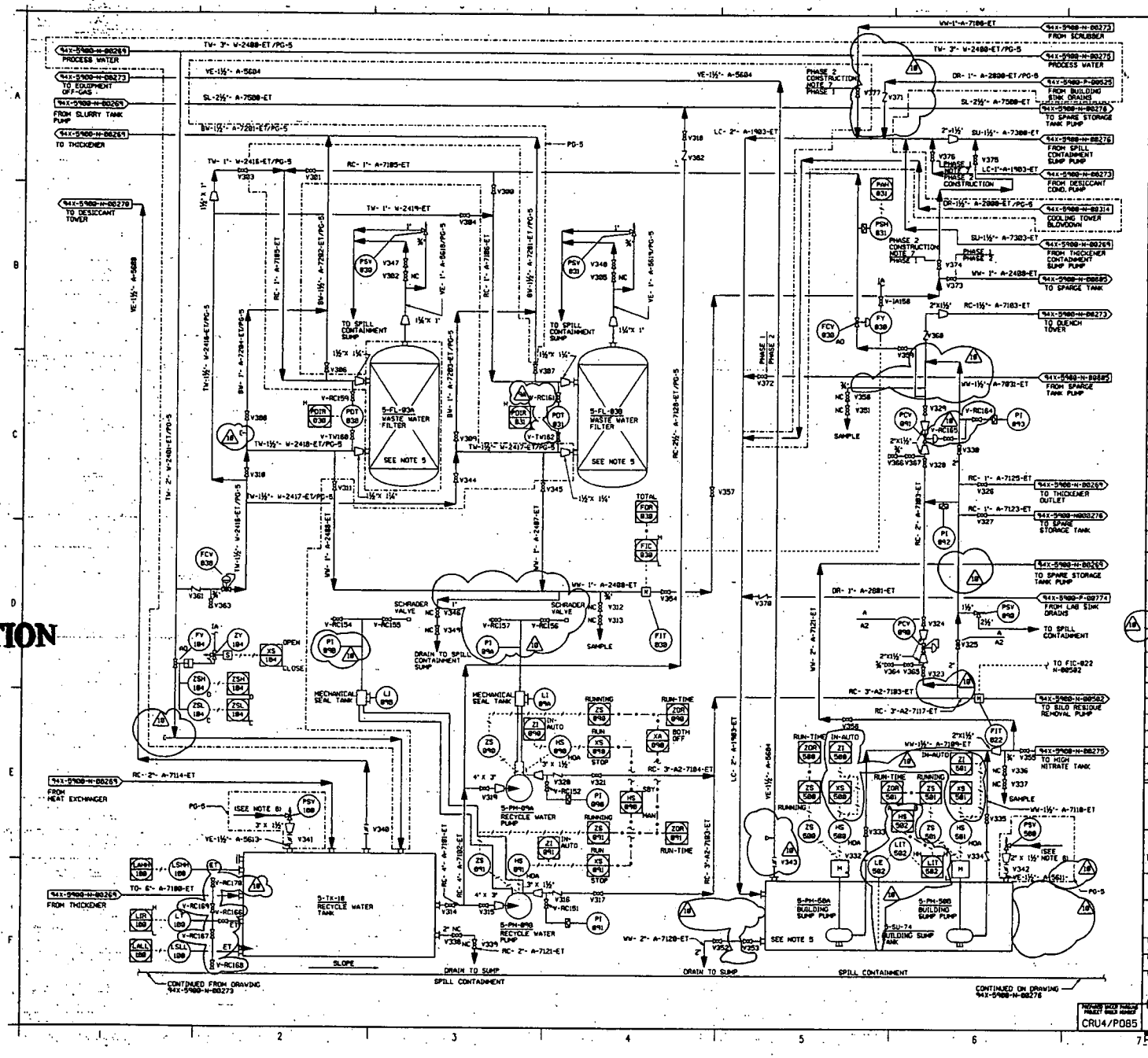

NOTES

1. FOR DRAWING INDEX SEE DRAWING 94X-5900-X-00353.
2. FOR SYMBOLS AND LEGEND SHEET SEE DRAWING 94X-5900-N-00268.
3. SUMP PUMP TO START/STOP ON LEVEL SWITCHES WHILE IN 'AUTO'. HIGH-HIGH ALARM SHALL START SECOND PUMP AND ALARM IN CONTROL ROOM.
4. INSULATE AND ELECTRIC HEAT TRACE ALL VENTS, DRAINS, AND SAMPLE LINES THRU LAST VALVE OR HIGH PART OF LINE AS APPLICABLE FOR ALL SYSTEMS WHERE HEADER OR VESSEL IS HEAT TRACED.
5. ELECTRIC HEAT TRACE AND INSULATE TANK AND FILTERS.
6. ALL PIPING AND EQUIPMENT ARE PERFORMANCE GRADE (PG4) AS INDICATED ON THE PERFORMANCE GRADE CHART SHOWN ON 94X-5900-N-00268 UNLESS OTHERWISE NOTED.
7. PIPE TO BE REMOVED AND VALVES NOS 374, 375, 376, & 377 TO BE CAPPED ON PHASE 2 CONSTRUCTION.
8. PSV-100 AND PSV-509 (VACUUM BREAKERS) SHALL BE INSTALLED IN PHASE 2. V341 AND V342 SHALL BE LOCKED OPEN OR REMOVED IN PHASE 2.
9. DACS INTERLOCKS ARE SHOWN ON THE FOXBORO LOGIC SKETCHES.

LAST VALVE NUMBER	V377

REFER DWG NO.	REFERENCE DWG TITLE
94X-5900-X-00353	DRAWING INDEX SHEET 1 OF 4
94X-5900-N-00268	SYMBOLS AND LEGEND SHEET
94X-5900-N-00269	DEWATERING
94X-5900-N-00271	FEED PREPARATION SHEET 2 OF 2
94X-5900-N-00273	OFF-GAS TREATMENT
94X-5900-N-00275	UTILITIES
94X-5900-N-00276	SPARE STORAGE TANK
94X-5900-N-00314	PROCESS COOLING WATER
94X-5900-N-00582	WASTE REMOVAL SYSTEM
94X-5900-N-00279	FEED PREPARATION SHEET-1 OF 2
94X-5900-P-00774	PLUMBING AND FIRE PROTECTION-PORTABLE LAB
94X-5900-P-00525	PLUMBING AND FIRE PROTECTION - PILOT PLANT
94X-5900-N-00885	RADON REMOVAL SYSTEM

REV NO.	REVISION PURPOSE - DESCRIPTION	PREPARED	REVIEWED	APPROVED
10	REVISED FROM WALKDOWN LOOPS 804, 891, 893, 180, & 588. RELOCATED P180A AND P180B. ADDED V-RC182 THRU V-RC179 TO L1180 TAP. INCORPORATED FERMCO DCN# 1636123, 1636231, 1636136, AND 1636173. ADDED DCN#STREAM PRESSURE SENSOR/LINE TO PV891 FROM P1893. REPLACED LCV-0811, LS-500A, LS-588 WITH LC/LIT582, AND DELETED LAH-581, RESPECTIVELY.	JJF 1-5-97	N/A	4/24/96
9	REVISED IN ACCORDANCE WITH FERMCO MARK-UPS OF THE FOXBORO PAGE LOGIC N 274 REV 8. ISSUED FOR CLIENT/OPERATIONAL REVIEW.	MRR FOX APP		2/23/96
8	ADDED NOTE 8, VALVES V341 AND V342. RELOCATED TW-1½" W-2416-ET TIE-IN. REVISED RC-2"-A-7183-ET BYPASS BRANCHES	APP		10/10/95
7	FCV930 & FV184 WERE GENERIC SYMBOLS - REVISED FROM WALKDOWN LOOPS 930, 931, 898, 891, 180, & 184 - REVISED TO AGREE WITH REV 8 LOGICS. FORA22 & FORA38 TOTALIZE SYMBOL DUPLICATION DELETED; REVISED TO INCORPORATE FERMCO DCN# 1636, 856. ADDED VALVES V-RC155 THRU V-TV162	JB	12-8-95	
6	REVISED PER LCN # VPP-897. ADDED ISOLATION VALVES. CONSTRUCTION PHASE BREAK B AND NOTE 7	MRR	N/A	
5	RECONFIGURED SUMP SUPPLY LINES	JB 6-6-95	RKK 6-6-95	
4	ADDED LINE NUMBER INFORMATION AND NOTE 6 AND PG-5 BOUNDARIES	JB 10-12-95	RKK 10-12-95	
	ADDED PIPE7, 8P3, 2ORP96, 891, 588, 581, VALVES V378 & V371, AND 3EF2, D-RC, P-00525 REROUTED			
3	ADDED VW-1"-A-2888-ET, TW-1½"-A-7183-ET, DR-1½"-A-2888-ET, TO-6"-A-7180-ET	APP 11-23-94	RKK 11-23-94	
2	ADDED SINK DRAINS	JB 7-29-94	RC	7-29-94
1	GENERAL REVISIONS AND SCOPE CHANGE OF 2-24-94	RAZ 10-12-94	RE 10-12-94	
0	APPROVED FOR CONSTRUCTION	RAZ 10-8-93	RCE 10-8-93	

UNITED STATES DEPARTMENT OF ENERGY
FERNALD ENVIRONMENTAL MANAGEMENT PROJECT

THIS DRAWING PREPARED BY
PARSONS
THE RALPH M. PARSONS CO. • PARSONS MADI, INC. • ENGINEERING-SCIENCE, INC.
CINCINNATI, OHIO

Figure A-15

DRAWING TITLE
MECHANICAL PROCESS
PIPING AND INSTRUMENTATION DIAGRAM
WASTEWATER TREATMENT

DRAWN BY	DATE	LEAD DESIGNER	DATE	CHECKED BY	DATE
J.C.BRENER	05/24/93	RALPH CIMINTOUS	10-8-93	DONALD E. JOHNSON	10/08/93

SUBMITTED FOR APPROVAL	REVIEWED FOR APPROVAL	CERTIFIED FOR CONSTRUCTION
R. A. ZIEMINSKI 11-01-93	R. C. EMERTON 11-01-93	W. PICKLES 05-18-94

PREPARED BASED PROJECT BASELINE NUMBER: CRU4/P085
SITE PROJECT NO.: WBS 1.1.1.4.3.1 00-90701
DRAWING BASED CODE NO.: 94X-5900-N-00274
SHEET NO.: N0007
REV NO.: 10

FOR INFORMATION ONLY

000066

Revision	By	Date
0	KSS	11/14/95
1	KSS	1/9/96
2	KSS	2/16/96
3	KSS	3/9/96

Title: N 274 Logic

Author:
Approved:

EDC 28

Sheet: 1 of 5

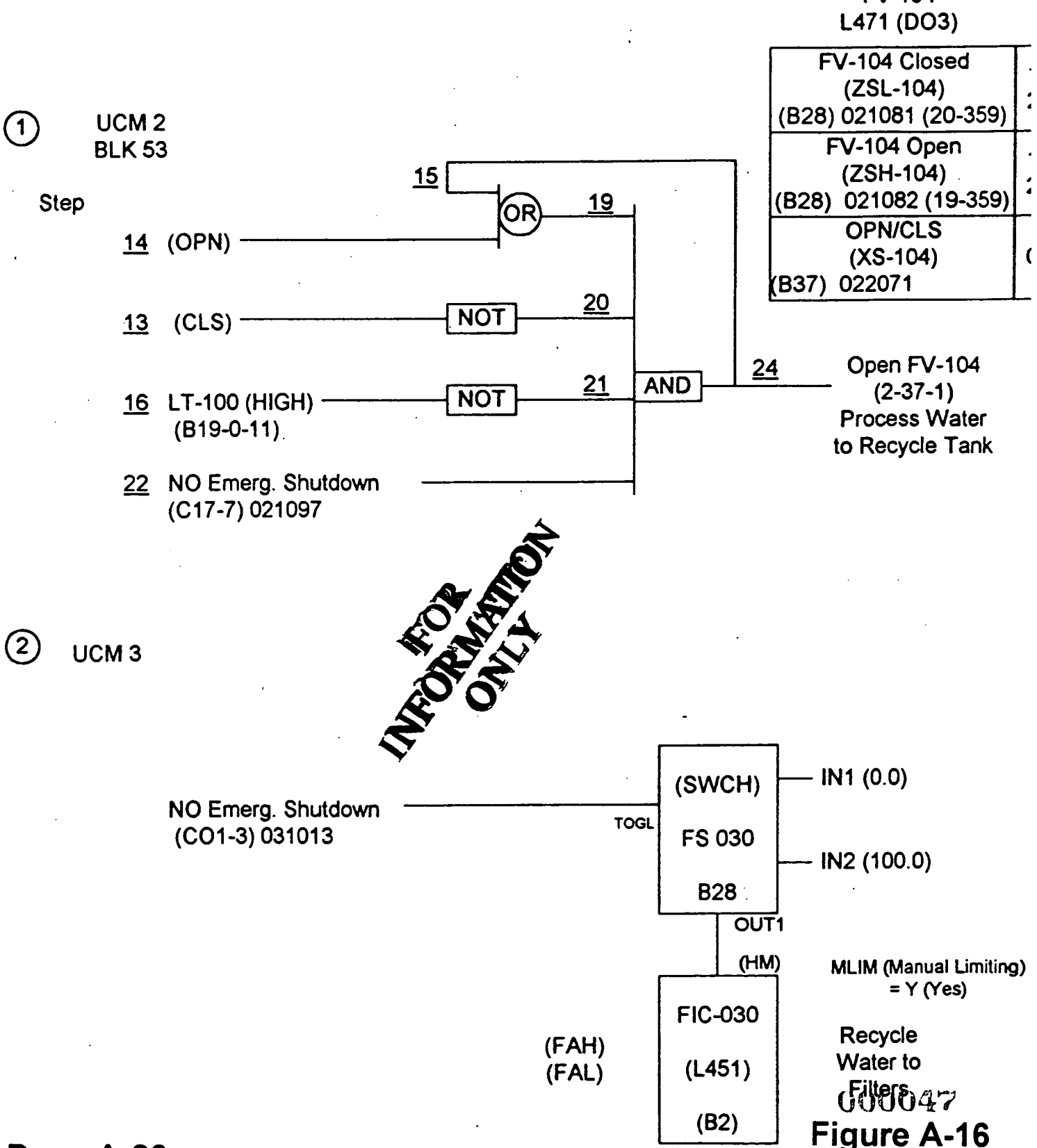

FOR INFORMATION ONLY

000047

Figure A-16

Date: Oct. 25, 1995

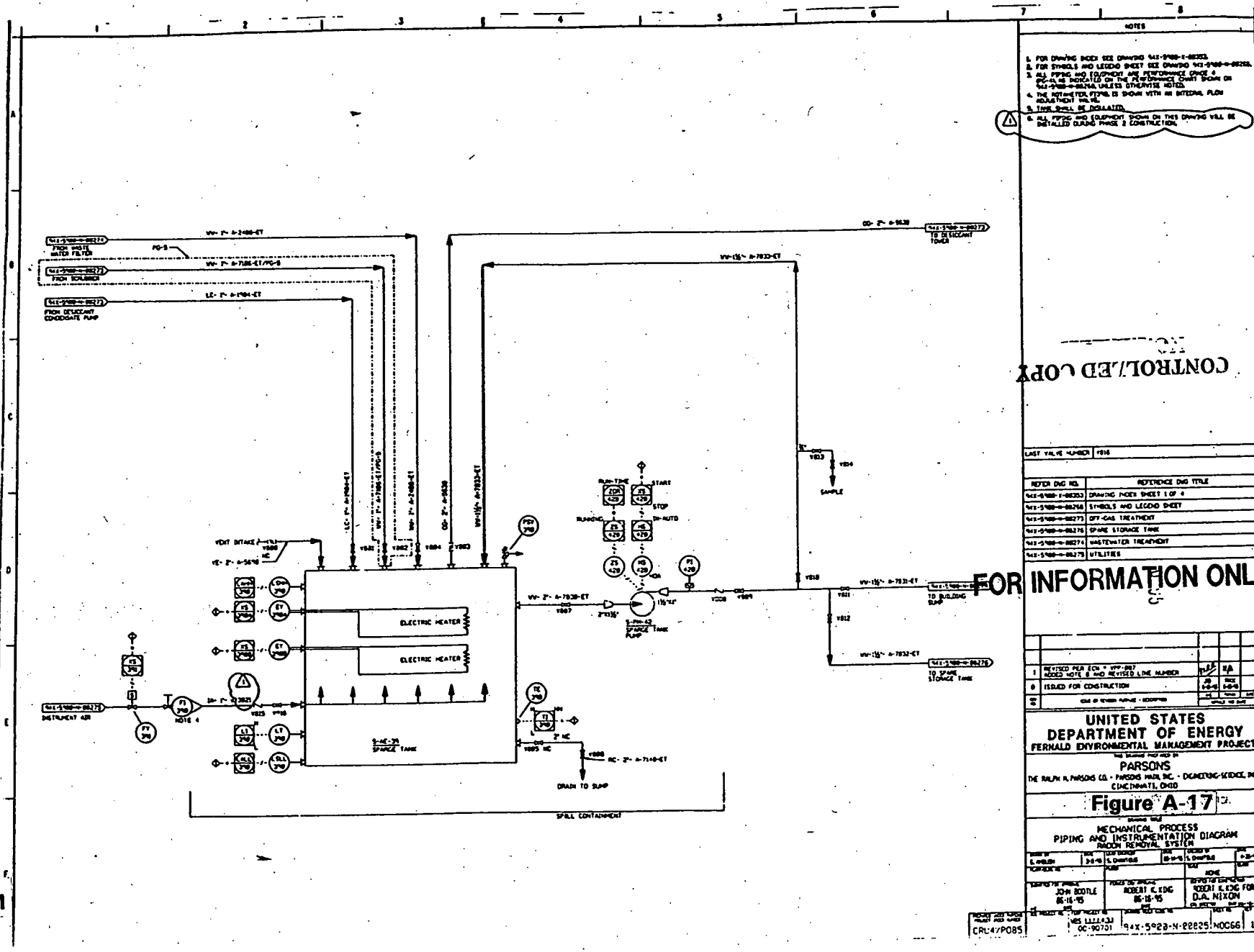
NOTES
1. FOR DRAWING INDEX SEE DRAWING 94X-5920-I-00033.
2. FOR SYMBOLS AND LEGEND SHEET SEE DRAWING 94X-5920-I-00256.
3. ALL PIPING AND EQUIPMENT ARE PERFORMANCE GRADE A (PG-A) AS INDICATED ON THE PERFORMANCE CHART SHOWN ON 94X-5920-I-00276, UNLESS OTHERWISE NOTED.
4. THE ROTAMETER FITTING IS SHOWN WITH AN INTERNAL FLOW ADJUSTMENT VALVE.
5. TANK SHALL BE DOUBLE-WALLED.
6. ALL PIPING AND EQUIPMENT SHOWN ON THIS DRAWING WILL BE INSTALLED DURING PHASE 2 CONSTRUCTION.
CONTROLLED COPY
FOR INFORMATION ONLY
LAST VALVE NUMBER V816
REFER DWG NO. | REFERENCE DWG TITLE
94X-5920-I-00033 | DRAWING INDEX SHEET 1 OF 4
94X-5920-I-00256 | SYMBOLS AND LEGEND SHEET
94X-5920-I-00273 | OFF-GAS TREATMENT
94X-5920-I-00276 | SPARE STORAGE TANK
94X-5920-I-00274 | WASTEWATER TREATMENT
94X-5920-I-00275 | UTILITIES
1 REVISED PER ECN # VPF-007 ADDED NOTE 6 AND REVISED LINE NUMBER
0 ISSUED FOR CONSTRUCTION
UNITED STATES DEPARTMENT OF ENERGY
FERNALD ENVIRONMENTAL MANAGEMENT PROJECT
PARSONS
THE RALPH M. PARSONS CO. · PARSONS MAIN INC. · DIAMETUM-SERVICE INC.
CINCINNATI, OHIO
Figure A-17
MECHANICAL PROCESS PIPING AND INSTRUMENTATION DIAGRAM RADON REMOVAL SYSTEM
JOHN BOOTLE 06-15-95
ROBERT K. KING 06-18-95
ROBERT K. KING FOR D.A. NIXON
94X-5920-N-00025 N0066 1
ELECTRIC HEATER
ELECTRIC HEATER
SPARE TANK
DRAIN TO SUMP
SPILL CONTAINMENT
TO DESICCANT TOWER
TO BUILDING SUMP
TO SPARE STORAGE TANK
SAMPLE
INSTRUMENT AIR
FROM WASTE WATER FILTER
FROM SCRUBBER
FROM DESICCANT CONDENSATE PUMP
SPARE STORAGE TANK PUMP
RUN-TIME
START
STOP
RUNNING
ON-AUTO
NOTE 4

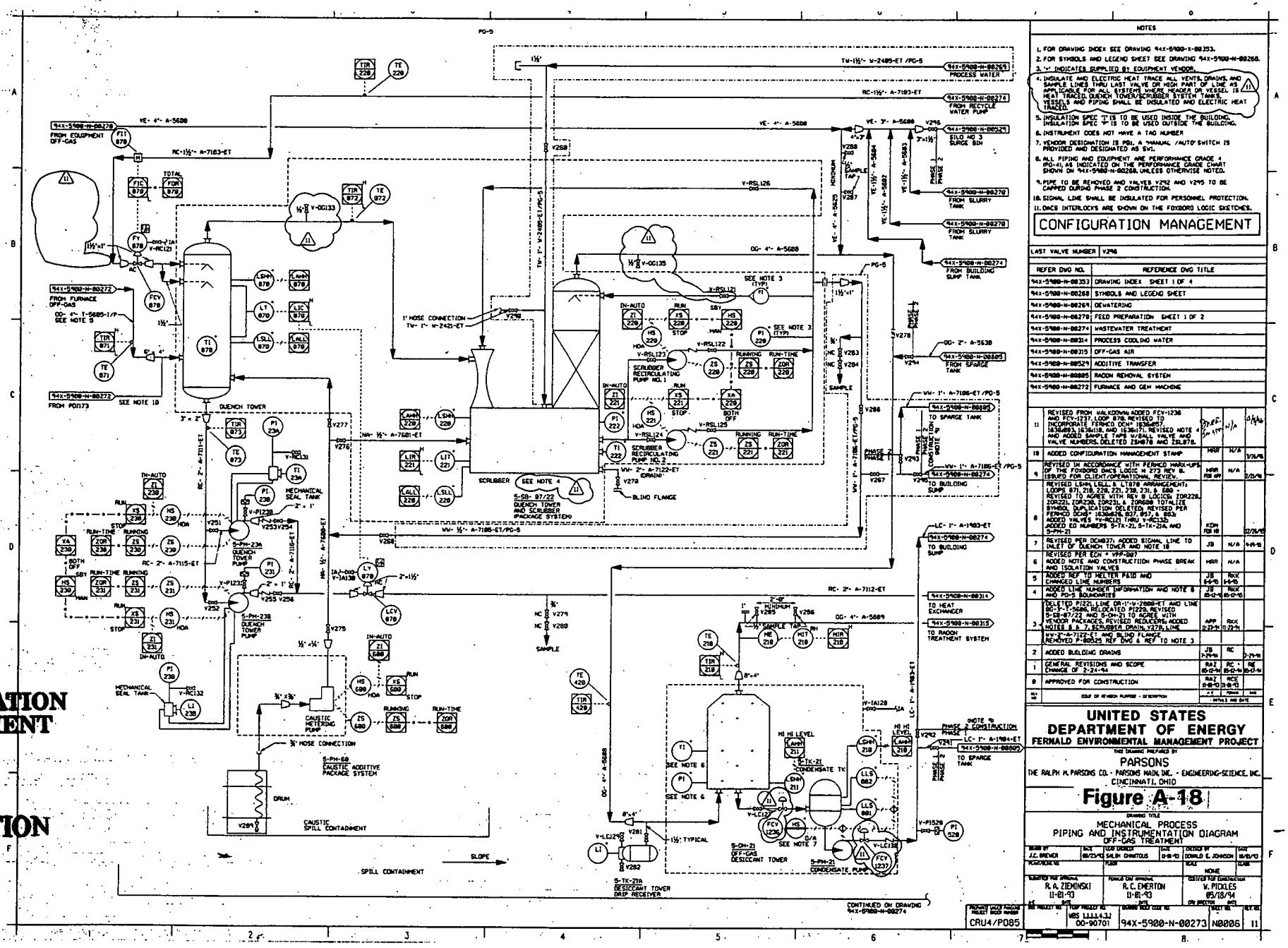

CONFIGURATION MANAGEMENT

FOR INFORMATION ONLY

000049

628

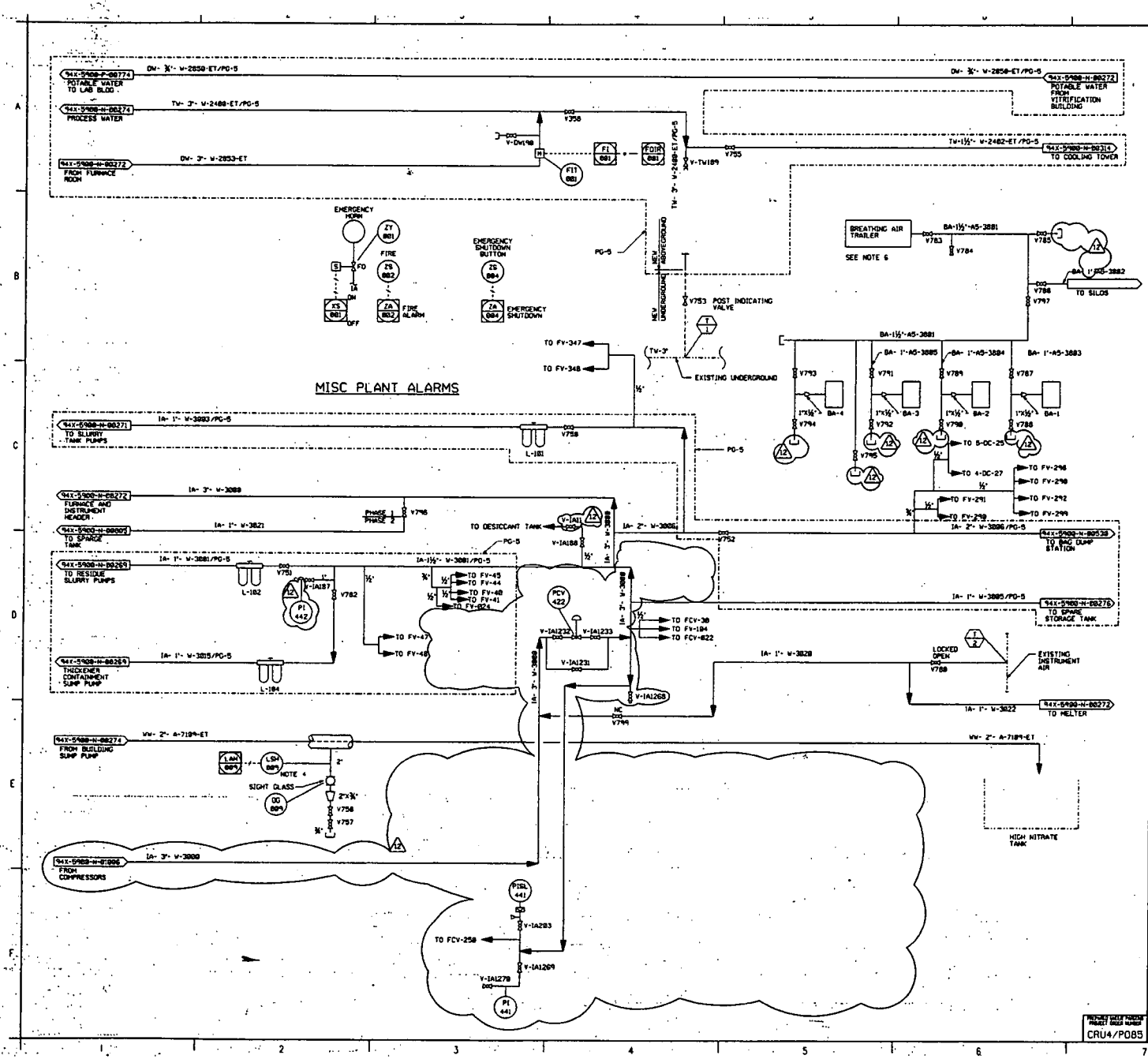

NOTES

1. FOR DRAWING INDEX SEE DRAWING 94X-5900-X-00353.
2. FOR SYMBOLS AND LEGEND SHEET SEE DRAWING 94X-5900-N-00268.
3. '*' INDICATES SUPPLIED BY EQUIPMENT VENDOR.
4. TYPICAL 12 PLACES. LAH 809 THROUGH LAH 819 AND LAH 821, LSH 809 THROUGH LSH 819 AND LSH 821, DG 809 THROUGH DG 819 AND DG821, AND V756 THROUGH V774, LOCATED AT VARIOUS DRIP POINTS (APPROXIMATELY EVERY 50 FEET) BETWEEN VITRIFICATION PILOT PLANT AND HIGH NITRATE TANK.
5. ALL PIPING AND EQUIPMENT ARE PERFORMANCE GRADE 4 (PG-4), AS INDICATED ON THE PERFORMANCE GRADE CHART SHOWN ON 94X-5900-N-00268, UNLESS OTHERWISE NOTED.
6. THE PIPING ASSOCIATED WITH BREATHING AIR WILL BE INSTALLED DURING PHASE 2 CONSTRUCTION.
7. DACS INTERLOCKS ARE SHOWN ON THE FOXBORO LOGIC SKETCHES.

FOR INFORMATION ONLY

LAST VALVE NUMBER	V799

REFER DWG NO.	REFERENCE DWG TITLE
94X-5900-X-00353	DRAWING INDEX SHEET 1 OF 4
94X-5900-N-00268	SYMBOLS AND LEGEND SHEET
94X-5900-N-00269	DEWATERING
94X-5900-N-00271	FEED PREPARATION SHEET 2 OF 2
94X-5900-N-00274	WASTEWATER TREATMENT
94X-5900-N-00276	SPARE STORAGE TANK
94X-5900-N-00314	PROCESS COOLING WATER
94X-5900-N-00538	SILO 3 MATERIAL TRANSFER
94X-5900-P-00525	PLUMBING AND FIRE PROTECTION-PILOT PLANT
94X-5900-P-00774	PLUMBING AND FIRE PROTECTION-PORTABLE LAB
94X-5900-N-00272	FURNACE AND GEM MACHINE
94X-5900-N-81008	AIR COMPRESSOR SYSTEM

REV NO.	BRIEF DESCRIPTION OF REVISION PURPOSE - DESCRIPTION	INITIALS AND DATE		
12	REVISED FROM WALKDOWN LOOPS 422, 441, AND 442. REMOVED AIR COMPRESSOR PACKAGE AND ADDED CONTINUATION REFERENCE TO NEW DWG. ADDED FIRE CAPS, V-1411, AND PI1412 INCORPORATED DCN 1636834, 1636878, REV 1 1636883, AND 1636122 REV 1; ADDED PCV422. AIR SERVICES, AND CONTINUATION FROM S-CH-45. REVISED PSL441 TO PISL441. RELOCATED SENSING LINE FOR PISL441	[illegible]	N/A	[illegible]
11	REVISED IN ACCORDANCE WITH FERMCO MARK-UPS OF THE FOXBORO DACS LOGIC N 275 REV B. ISSUED FOR CLIENT/OPERATIONAL REVIEW.	HRR FIB APP	N/A	2/21/96
10	RELOCATED V358	APP		10/12/95
9	FOXBOX TOTALIZE SYMBOL DUPLICATION DELETED. ADDED V758 & V-1A101 THRU V-DW190 REVISED PER DCN 878. ADDED INSTRUMENT AIR BRANCHES. REVISED S-CH-44 PACKAGE	JB 12-8-95	N/A	
8	REVISED PER DCN 817. ADDED INSTRUMENT AIR LINE 1A-1"-W-3823, V794, & NC TO V788	JB	N/A	9-29-95
7	REVISED PER ECN * VPP-007. REVISED LINE 3828 TO 3821. ADDED PHASE 1 AND PHASE 2 BREAK. ADDED NOTE 6	HRR	N/A	
6	ADDED ISOLATION VALVES	HRR 9-21-95	RKK 9-21-95	
5	ADDED MELTER P&ID REF. ADDED PG-5 TO DW, AND CHANGED BA MATERIAL CODE	JB 5-9-95	RKK 5-9-95	
4	ADDED LINE NUMBER INFORMATION. NOTE 3, AND A1-1"-W-3828. ADDED PG-5 BOUNDARIES	JB 85-12-05	RKK 85-12-05	
3	DELETED 2A883 AND 2S883 PER VENDOR DRAWINGS, 1A-1"-W-3828, & 1A-6"-W-3813	APP 8-22-94	RKK 8-22-94	
2	ADDED LINE 1A-1"-W-3829, 1A-1"-W-3815 AND DW-1"-W-2958-ET	JB 87-21-94	RC	87-21-94
1	GENERAL REVISIONS AND SCOPE CHANGE OF 2-24-94	RAZ 85-12-94	RC 85-12-94	RE 85-12-94
0	APPROVED FOR CONSTRUCTION	RAZ 11-8-93	RCE 11-8-93	

UNITED STATES DEPARTMENT OF ENERGY
FERNALD ENVIRONMENTAL MANAGEMENT PROJECT

THIS DRAWING PREPARED BY
PARSONS
THE RALPH M. PARSONS CO. - PARSONS MADI, INC. - ENGINEERING-SCIENCE, INC.
CINCINNATI, OHIO

Figure A-19 SIGN

DRAWING TITLE
MECHANICAL PROCESS
PIPING AND INSTRUMENTATION DIAGRAM
UTILITIES

DRAWN BY	DATE	LEAD DESIGNER	DATE	CHECKED BY	DATE
J.C. BREWER	08/24/93	SALIM GHANTOUS	9-8-93	DONALD E. JOHNSON	10-8-93

SCALE	FLOOR	SCALE	FLOOR
		NONE	

SUBMITTED FOR APPROVAL	FUNCTIONAL APPROVAL	CERTIFIED FOR CONSTRUCTION
R. A. ZIEMDSKI 11-01-93	R. C. EMERTON 11-01-93	V. PIDDLES 05-18-94

PREPARED UNDER PARSONS PROJECT ORDER NUMBER	DOE PROJECT NO.	FLUOR PROJECT NO.	DRAWING INDEX CODE NO.	SHEET NO.	REV NO.
CRU4/P085		WBS 1.1.1.1.4.3.1	00-90701 94X-5900-N-00275	N0008	12

000050

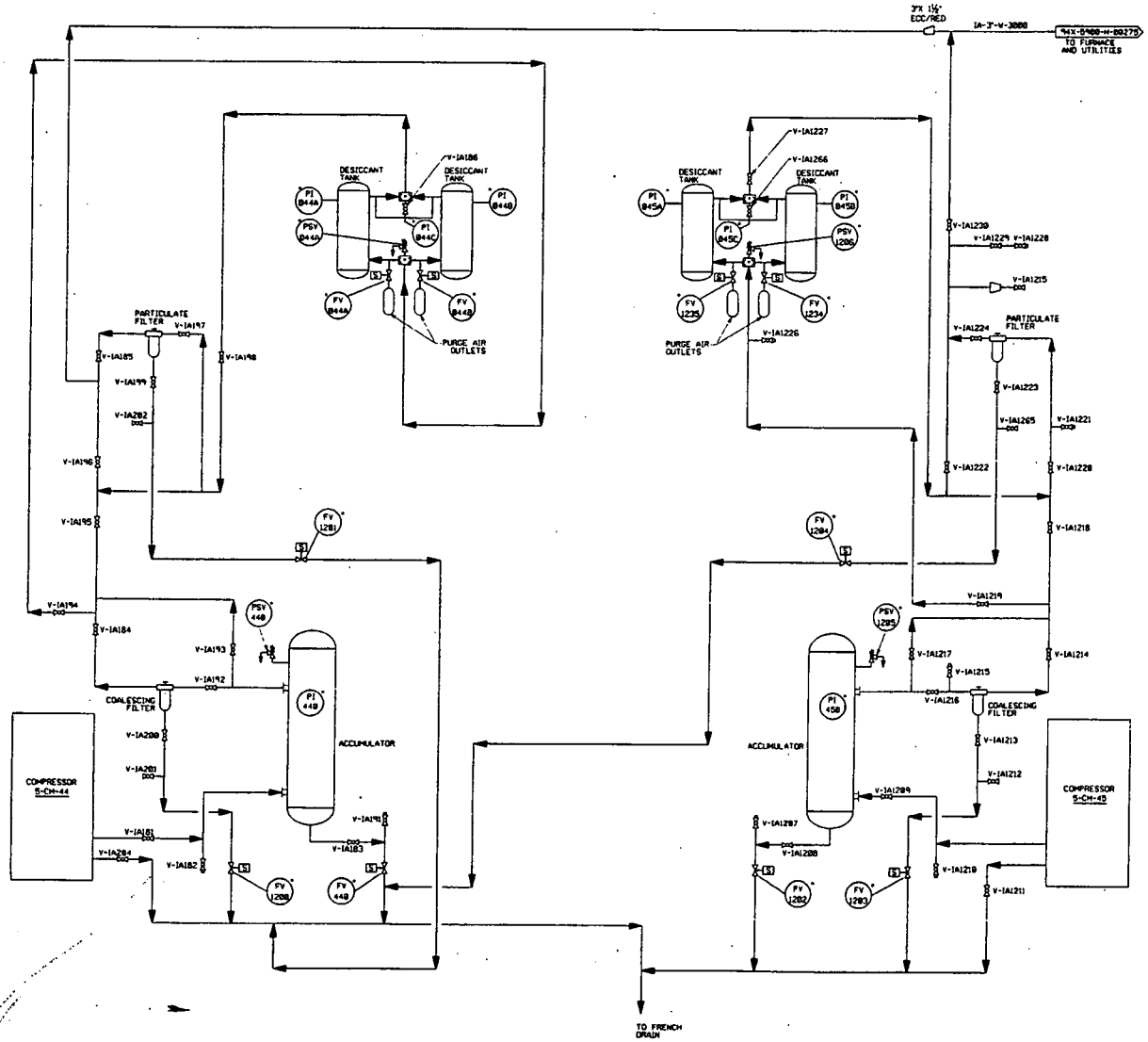

NOTES

1. "V" INDICATES SUPPLIED BY EQUIPMENT VENDOR. CONTROL DEVICES AND LOGIC INTERCONNECTION NOT SHOWN FOR CLARITY.
2. FIELD TO PROVIDE FREEZE PROTECTION FOR THE FOLLOWING ITEMS PER FERNICO DCN# 16306B03 AFTERCOOLER MOISTURE TRAP DRAIN, AIR RECEIVER DRAIN, DRYER PRE-FILTER DRAIN, PIPING BETWEEN COMPRESSOR DISCHARGE AND AIR RECEIVER, PIPING BETWEEN AIR RECEIVER OUTLET AND EACH AIR DRYER VESSEL INLET, ALL LOW POINT DRAINS.
3. HEAT TRACE AND INSULATE PIPING SYSTEM AND EQUIPMENT BETWEEN COMPRESSOR S-CH-45 AND TIE-IN TO EXISTING 3" HEADER.
4. ADDED NEW AIR COMPRESSOR S-CH-45 AND ASSOCIATED EQUIPMENT PER FERNICO DCN# 16336L23. MOVED EXISTING AIR COMPRESSOR PACKAGE SYSTEM S-CH-44 FROM DRAWING 94X-5900-N-00275 AND TIED NEW AIR COMPRESSOR PIPING INTO EXISTING AIR COMPRESSOR PIPING.

LAST VALVE NUMBER	V-IA1278
REFER DWG NO.	REFERENCE DWG TITLE
94X-5900-X-00353	DRAWING INDEX SHEET 1 OF 4
94X-5900-N-00268	SYMBOLS AND LEGEND SHEET
94X-5900-N-00275	PIPING AND INSTRUMENTATION DIAGRAM UTILITIES

FOR INFORMATION ONLY

REV NO	DESC OF REVISION PURPOSE - DESCRIPTION	DRAWN	CHECKED	APPROVED
0	ISSUED APPROVED FOR CONSTRUCTION MODIFIED PER NOTES 2, 3 & 4			

UNITED STATES DEPARTMENT OF ENERGY
FERNALD ENVIRONMENTAL MANAGEMENT PROJECT

THIS DRAWING PREPARED BY
PARSONS
THE RALPH M. PARSONS CO. - PARSONS MAIN, INC. - ENGINEERING-SCIENCE, INC.
CINCINNATI, OHIO

Figure A-20

DRAWING TITLE
MECHANICAL PROCESS
PIPING AND INSTRUMENTATION DIAGRAM
AIR COMPRESSOR SYSTEM

DRAWN BY	DATE	LEAD ENGINEER	DATE	CHECKED BY	DATE
D. PIPKIN	3-25-96			D. CARLSON	

SCALE: NONE

PREPARED DATE PARSONS PROJECT	PROJECT NO.	DRAWING SUBJECT CODE NO.	SHEET NO.	REV NO.
CRU4/P085	VBS 1.1.1.4.3.1 00-90701	94X-5900-N-01006	N0079	0

Page A-24

000051

628

FOR INFORMATION ONLY

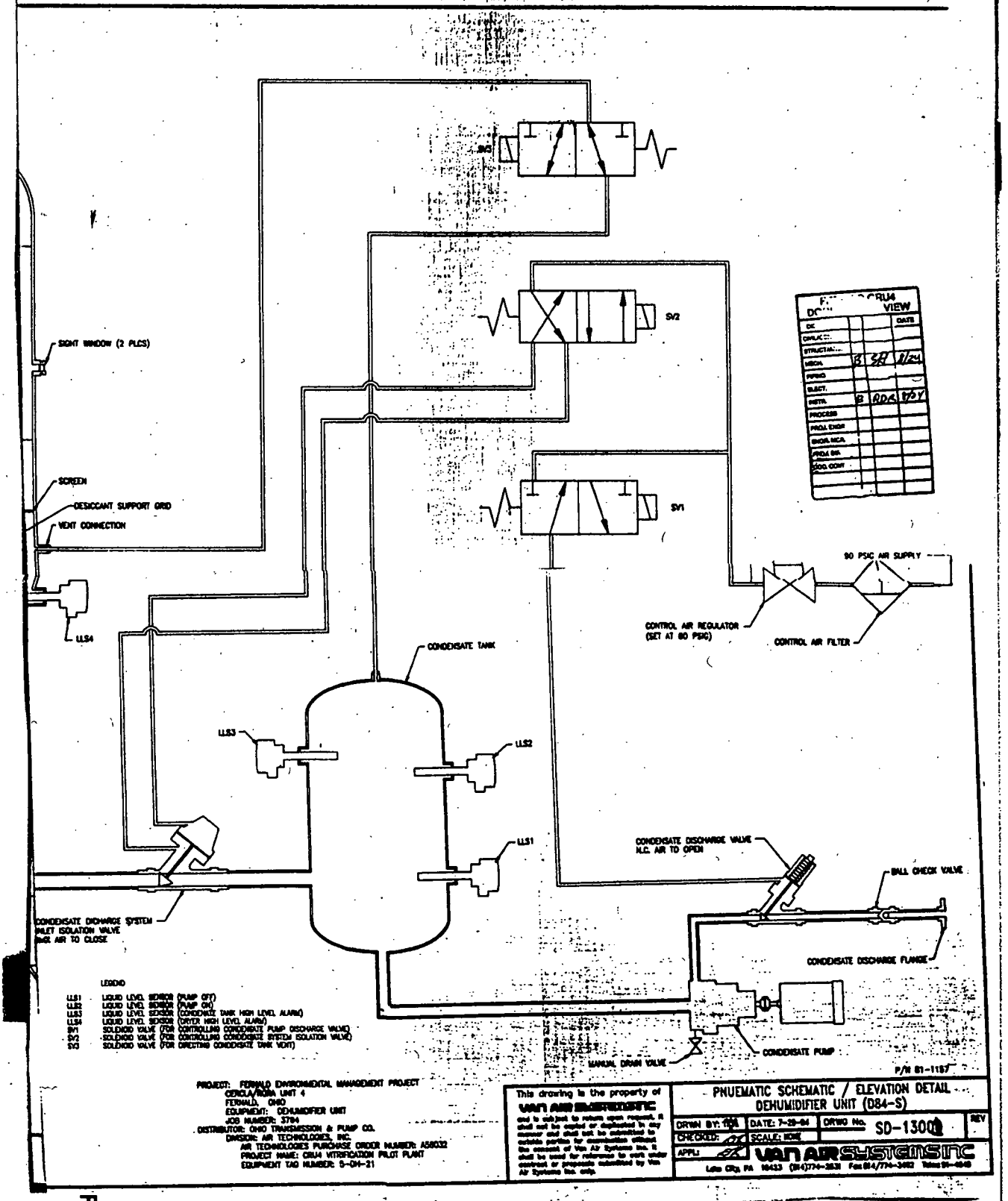

Figure A-21

Revision	By	Date
0	KSS	11/14/95
1	KSS	2/10/96
2	KSS	3/12/96

Title: N 273 Logic

628

Author: Scott Stein

Approved: DL Jacobsen

EDC

Sheet: 2 of 6

FOR INFORMATION ONLY

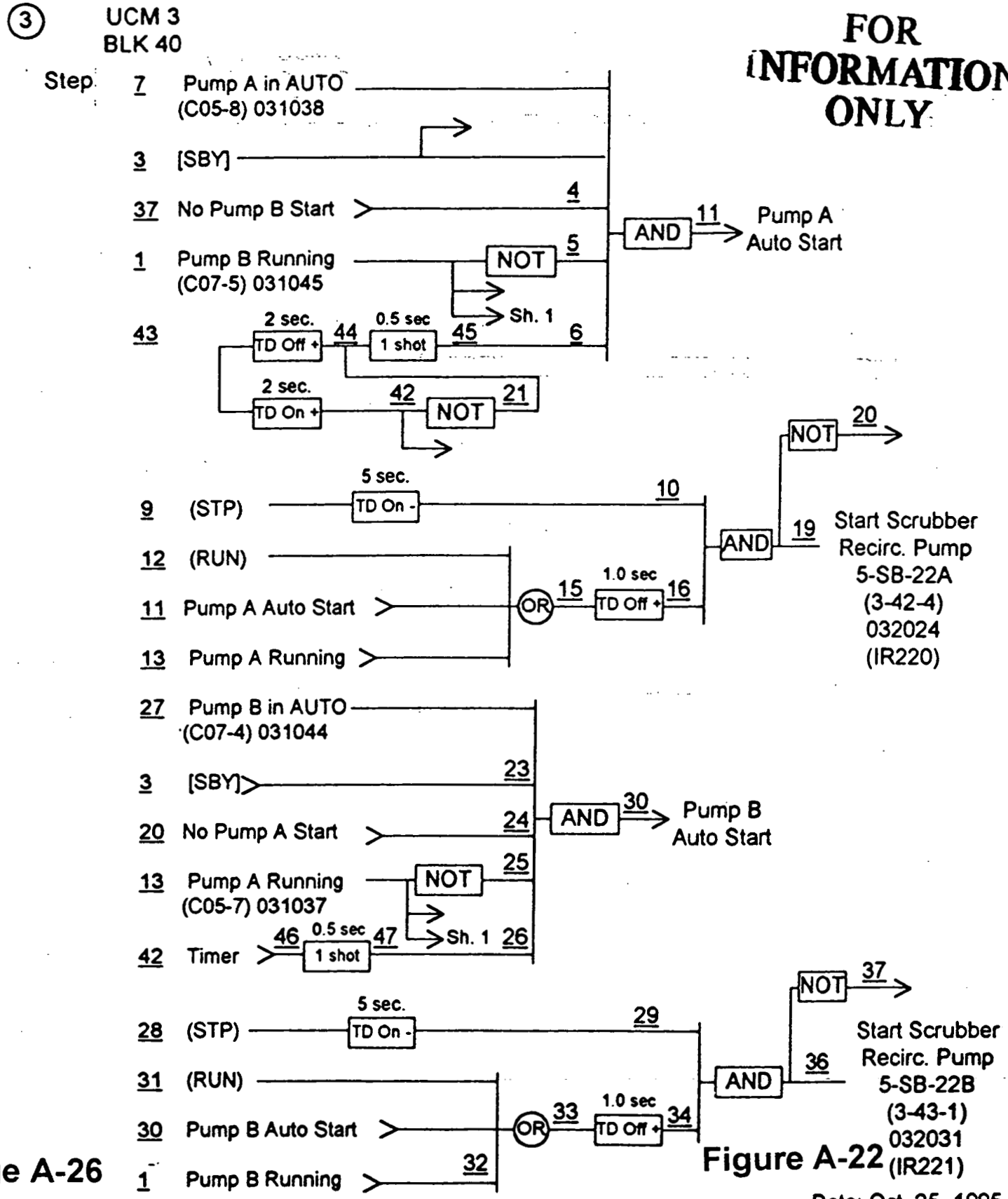

Figure A-22

Date: Oct. 25, 1995

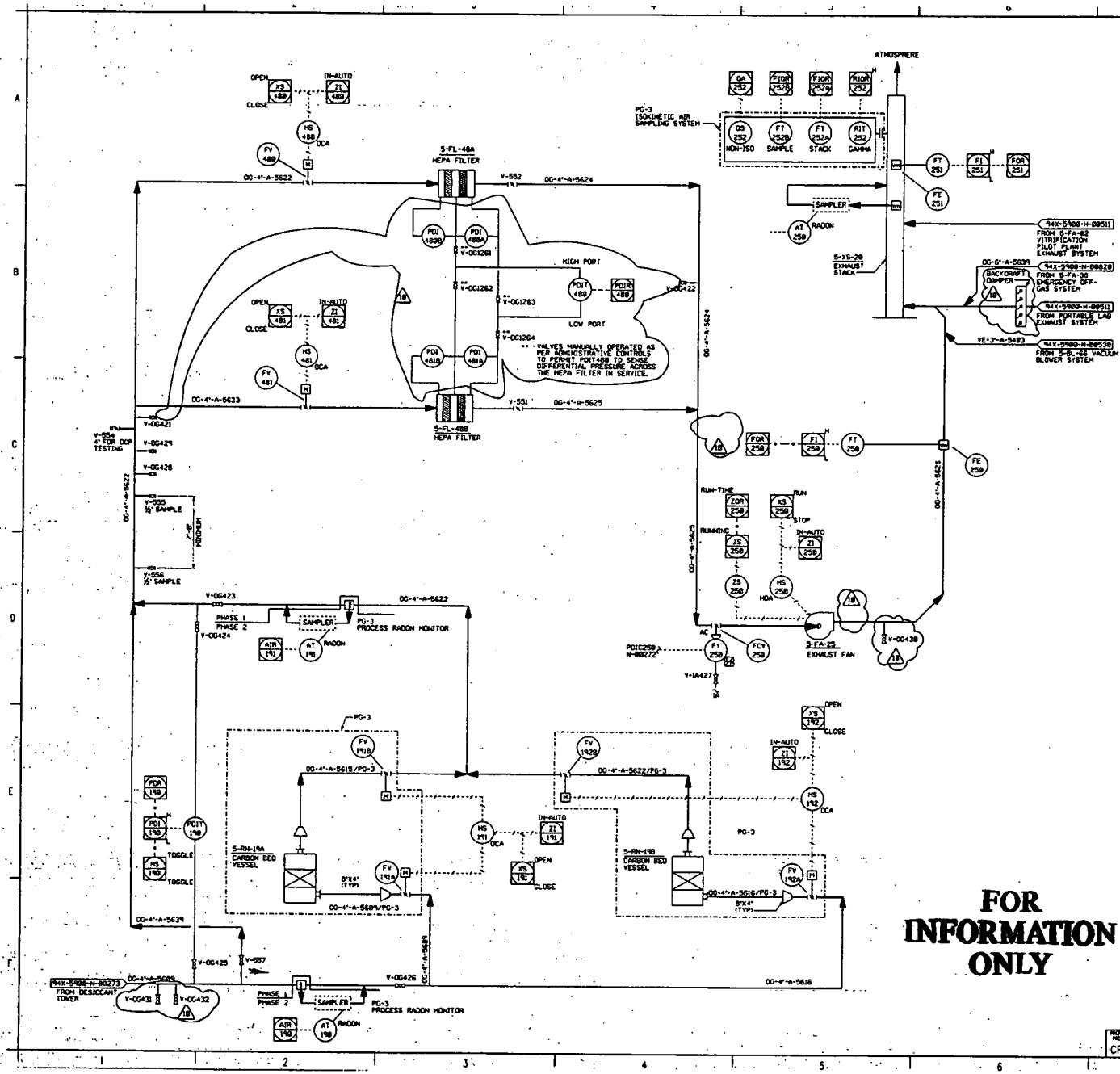

NOTES

1. SEE DRAWING 94X-5900-X-00356 FOR DRAWING INDEX.
2. SEE DRAWING 94X-5900-N-00268 FOR SYMBOLS AND LEGEND SHEET.
3. WHERE DUAL FILTERS ARE SHOWN, ONE IS INSTALLED AS A SPARE.
4. ALL PIPING AND EQUIPMENT ARE PERFORMANCE GRADE 4 (PG-4), AS INDICATED ON THE PERFORMANCE CHART SHOWN ON 92X-5900-N-00268, UNLESS OTHERWISE NOTED.
5. DACS INTERLOCKS ARE SHOWN ON THE FOXBORO LOGIC SKETCHES.

CONFIGURATION MANAGEMENT

CONFIGURATION MANAGEMENT

LAST VALVE NUMBER	V-557

REFER DWG NO.	REFERENCE DWG TITLE
94X-5900-X-00356	DRAWING INDEX SHEET 4 OF 4
94X-5900-N-00268	SYMBOLS AND LEGEND SHEET
94X-5900-N-00273	OFF-GAS TREATMENT
94X-5900-N-00530	SILO 3 MATERIAL TRANSFER
94X-5900-N-00511	AIR FLOW AND CONTROL DIAGRAM
94X-5900-N-00829	RADON REMOVAL SYSTEM

10	ADDED BACKDRAFT DAMPER AND BLANKS. RELOCATED V-00438 DOWNSTREAM OF 5-FA-25. DELETED VALVE V-553 PER FERMCO DCN# 1636152. REVISED FROM WALKDOWN; LOOP488. ADDED PDI488A, PDI488B, PDI489A AND PDI489B. INCORPORATED DCN 1636168% RELOCATED PDIT489 AND PDIR489; AND ADDED ISOLATION VALVES V-00341 AND V-00342.	[illegible]	N/A	4/14/96
9	ADDED CONFIGURATION MANAGEMENT STAMP	MRR	N/A	3/26/96
8	REVISED IN ACCORDANCE WITH FERMCO MARK-UP# OF THE FOXBORO DACS LOGICS # 315 REV 1 & # 320 REV 1 ISSUED FOR CLIENT/ OPERATIONAL REVIEW.	MRR FOR APP	N/A	2/2/96
7	FOR801 & FOX258 TOTALIZE SYMBOL DUPLICATION DELETED LOOPS 190, 191, 192, 258, 488 & 481 - REVISED TO AGREE WITH REV 8 LOGICS; REVISED TO INCORPORATE FERMCO DCN# 1636027 AND 8561 ADDED BY-PASS ON OFF-GAS; ADDED VALVES V-00421 THRU V-00426, V-1A427, V-00428 THRU V-00430 & V557	KDM FOR RR		12/21/95
6	IDENTIFIED PHASE 2 CONSTRUCTION PER FERMCO ECN#. 1[illegible]-287	APP 11-[illegible]	N/A	
5	ADDED AT190 & AT191; RELOCATED RADON MONITOR NOTE FROM LOCATION E1 TO AT190 & AT191	MRR	RKK	5/28/95
4	ADDED LINE NUMBER INFORMATION, NOTE 4, AND LOOPS FOR ISOKINETIC SYSTEM	JB 5/12/95	RKK	5/12/95
	ADDED PG-3 BOUNDARIES			
3	REVISED CARBON BED VESSELS PER VENDOR DRAWINGS, ADDED "AC" TO FCV258	APP 11/21/94	RKK 11/21/94	
2	ADDED PORTABLE LAB TO EXHAUST STACK	APP 9-17-94	JC 9-17-94	
1	PER FERMCO SCOPE CHANGE OF 2/25/94	JG 5/13/94	RE 5/17/94	5/17/94
0	APPROVED FOR CONSTRUCTION	RAZ 8-2-93	RE 8-2-93	5-18-94

UNITED STATES DEPARTMENT OF ENERGY
FERNALD ENVIRONMENTAL MANAGEMENT PROJECT

THIS DRAWING PREPARED BY
PARSONS
THE RALPH M. PARSONS CO. - PARSONS MAIN, INC. - ENGINEERING-SCIENCE, INC.
CINCINNATI, OHIO

Figure A-23

DRAWING TITLE
MECHANICAL UTILITIES
PIPING AND INSTRUMENTATION DIAGRAM
OFF-GAS AIR

DRAWN BY	DATE	LEAD ENGINEER	DATE	DESIGNED BY	DATE
H.PALAN	9-2-93	L. TUCKER	9-2-93	ALLA AZARKHIN	9-2-93

SUBMITTED FOR APPROVAL	FOREIGN CNO APPROVAL	CERTIFIED FOR CONSTRUCTION
R. A. ZIEKOWSKI 11-2-93	R. CLARKE/R. EMERTON 11-2-93	W. PICKLES 5-18-94

MECHANICAL UNIT PROJECT PROJECT ENGINEER MANAGER	SITE PROJECT NO.	FEDERAL PROJECT NO.	DRAWING PROJECT CODE NO.	DRAWING NO.	REV NO.
CRU4/P085		00-90701	94X-5900-N-00315	N0014	10

000054

628

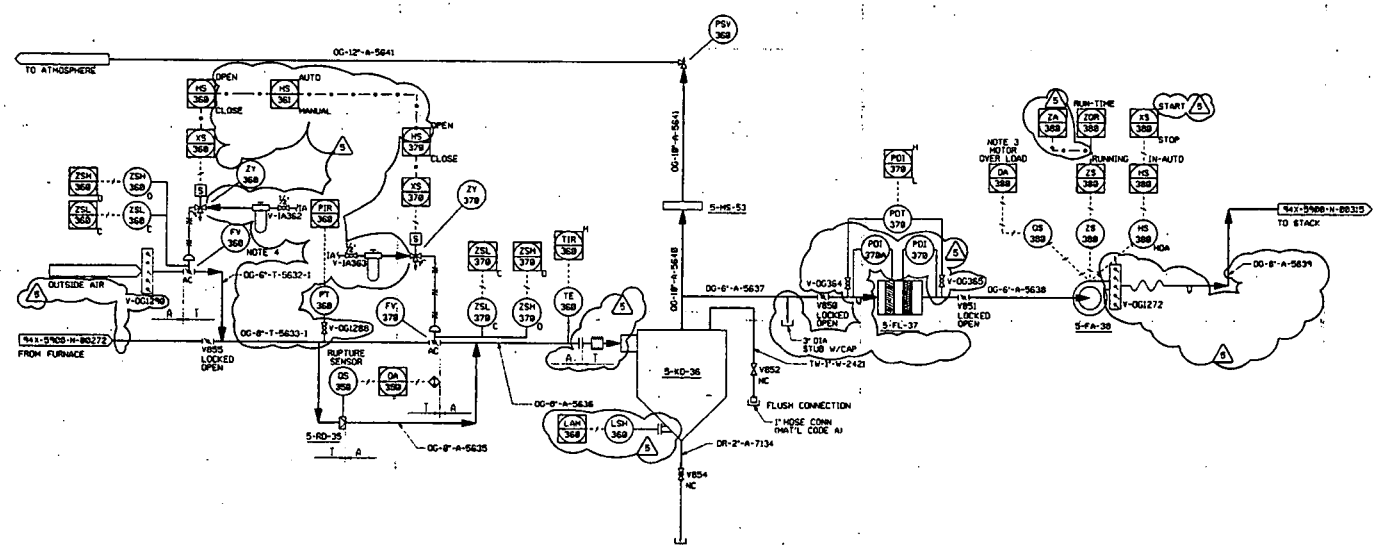

FOR INFORMATION ONLY

NOTES

1. FOR DRAWING INDEX SEE DRAWING 94X-5900-X-80353.
2. FOR SYMBOLS AND LEGEND SHEET SEE DRAWING 94X-5900-N-80266.
3. FAN MOTOR DOES NOT SHUT OFF ON MOTOR OVER-LOAD.
4. FV368 WILL BE PRESET TO MAINTAIN AN AVERAGE OF -0.5" W.C. IN THE FURNACE WHEN 5-FA-38 FAN IS ON.
5. DACS INTERLOCKS ARE SHOWN ON THE FOXBORO LOGIC SKETCHES.

CONFIGURATION MANAGEMENT

CONFIGURATION MANAGEMENT

LAST VALVE NUMBER | V855

REFER DWG NO.	REFERENCE DWG TITLE
94X-5900-X-80353	DRAWING INDEX SHEET 1 OF 4
94X-5900-N-80266	SYMBOLS AND LEGEND SHEET
94X-5900-N-80315	MECHANICAL UTILITIES, P&ID OFF-GAS AIR
94X-5900-N-80272	FURNACE AND GEM MACHINE

REV NO	ISSUE OR REVISION PURPOSE - DESCRIPTION	DRAWN BY	CHECKED BY	DATE
5	REVISED FROM WALKDOWN; LOOPS 368, 361, 379 & 388. RELOCATED LSH368 AND LAH388 TO ADDED FLANGE CONNECTION ON 5-KO-36. INCORPORATED DCN# 16368-52 TO ADD ALARM ZA388, ADD DACS HAND SWITCHES HS368, 361, & 378, AND CHANGE PIC368 TO PIR368. INCORPORATED DCN#16368-95-2 TO ADD PDI378 & PDI378A & VALVES V-OG364 & V-OG365 WITH WALKDOWN TO VERIFY PDI CONNECTIONS.	[illegible]	N/A	[illegible]
4	ADDED CONFIGURATION MANAGEMENT STAMP	MRR	N/A	10/26/95
3	REVISED IN ACCORDANCE WITH FERMCO MARK-UPS OF THE FOXBORO DACS LOGIC N 828 REV B, ISSUED FOR CLIENT/OPERATIONAL REVIEW.	MRR FOX MP	N/A -	2/23/95
2	DELETED REDUCER IN LN 5633	JB	N/A	1/23/95
1	DELETED PIPING MATERIAL CALL OUT AND ADDED REF TO MELTER P&ID	JB 5/5/95	RKK	5/5/95
	REVISED PIC368 TO PI368		-	
0	APPROVED FOR CONSTRUCTION	JB 4-27-95	RKK 4-27-95	

UNITED STATES
DEPARTMENT OF ENERGY
FERNALD ENVIRONMENTAL MANAGEMENT PROJECT

THIS DRAWING PREPARED BY
PARSONS
THE RALPH M. PARSONS CO. - PARSONS MAIN, INC. - ENGINEERING-SCIENCE, INC.
CINCINNATI, OHIO

Figure A-24

DRAWING TITLE
MECHANICAL PROCESS
PIPING AND INSTRUMENTATION DIAGRAM
EMERGENCY OFF-GAS SYSTEM

DRAWN BY	DATE	LEAD ENGINEER	DATE	CHECKED BY	DATE
J. LAWSON	3-11-95	B. D. BIGGERS	4-27-95	J. L. COOPER	4-28-95

HORIZ/BASE NO. | VERT | SCALE NONE | CLASS

SUBMITTED FOR APPROVAL	FOREIGN DAS APPROVAL	CERTIFIED FOR CONSTRUCTION
J. BOOTLE 4-27-95	ROBERT K. KING 4-27-95	R. K. KING FOR D. A. MEKOH 4-27-95
DATE	DATE	CM DIRECTOR DATE

DOE PROJECT NO.	TOP PROJECT NO.	DRAWING INDEX CODE NO.	SHEET NO.	REV NO.
	WBS 1.1.1.1.4.3.1 00-90701	94X-5900-N-00820	N0065	5

PROJECT DATA & FUNCTIONS PROJECT ENGRG MANAGER: CRU4/P085

Page A-28

000055

628

Revision	By	Date
0	KSS	11/14/95
1	KSS	1/26/96
2	KSS	3/2/96
3	KSS	3/29/96

Title: N 820 Logic

EDC

FOR INFORMATION ONLY

Author: S. Stavinskas

Approved: D.F. Jacobsen

Sheet: 1 of 3

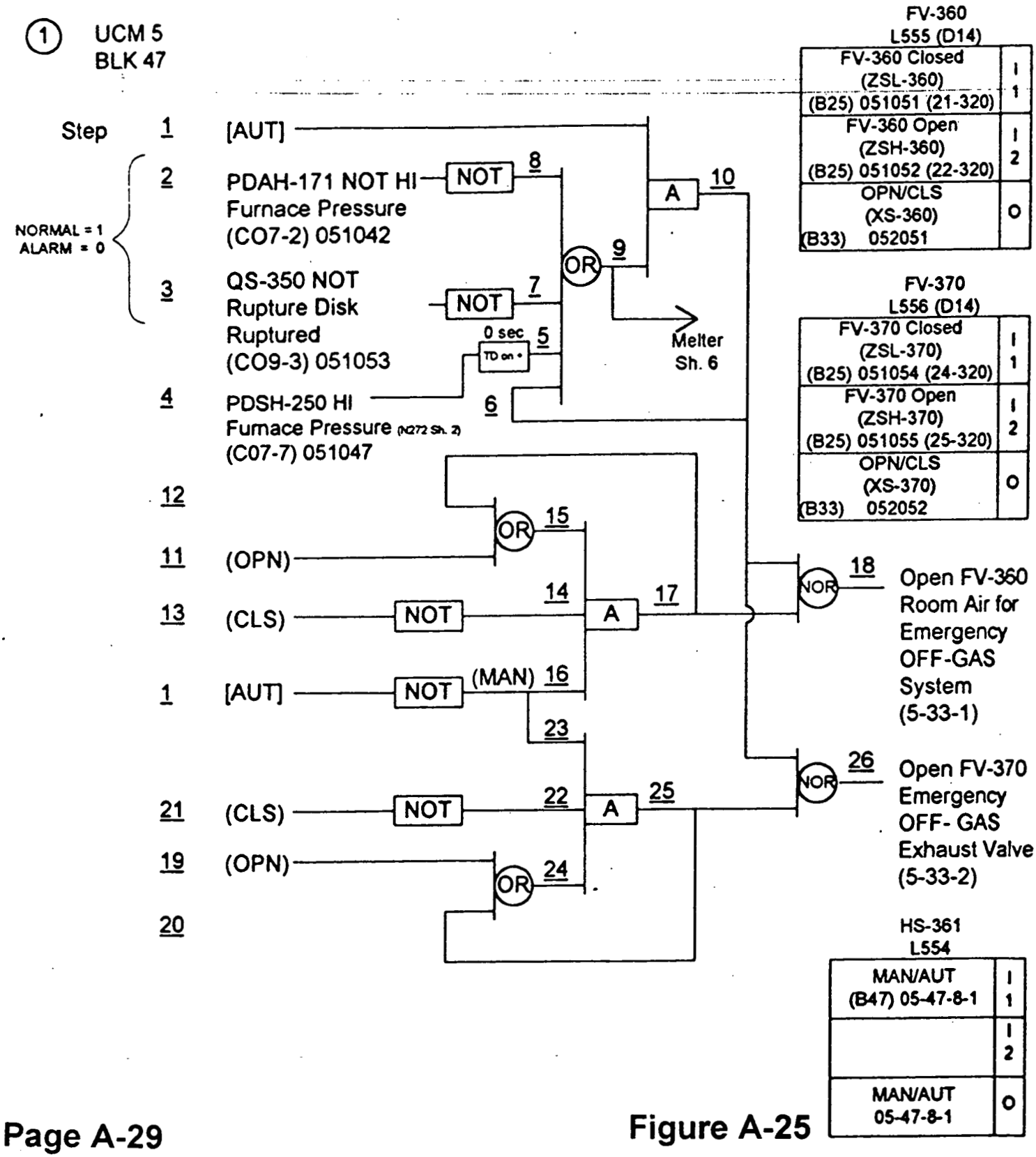

Figure A-25

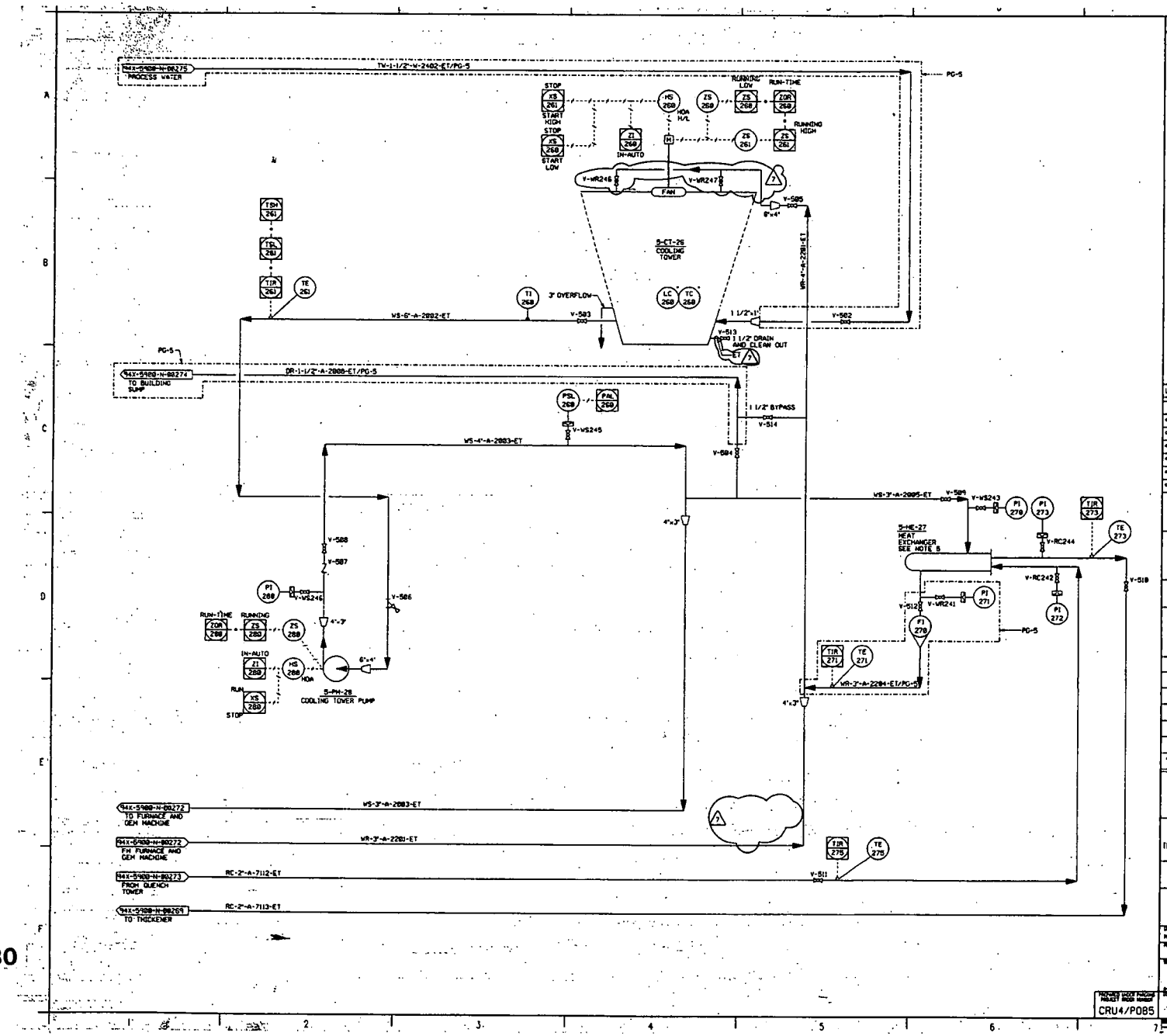

NOTES

1. FOR SYMBOLS AND LEGEND SHEET SEE DRAWING 94X-5900-N-00268.
2. FOR DRAWING INDEX SEE DRAWING 94X-5900-X-00356.
3. NOT USED
4. ALL PIPING AND EQUIPMENT ARE PERFORMANCE GRADE 4 (PG-4), AS INDICATED ON THE PERFORMANCE CHART SHOWN ON 94X-5900-N-00268, UNLESS OTHERWISE NOTED.
5. HEAT EXCHANGER SHALL BE ELECTRIC HEAT TRACED AND INSULATED.
6. DACS INTERLOCKS ARE SHOWN ON THE FOXBORO LOGIC SKETCHES.

FOR INFORMATION ONLY

LAST VALVE NUMBER	V514
REFER DWG NO.	REFERENCE DWG TITLE
94X-5900-X-00356	DRAWING INDEX SHEET 4 OF 4
94X-5900-N-00268	SYMBOLS AND LEGEND SHEET
94X-5900-N-00269	DEWATERING
94X-5900-N-00275	UTILITIES
94X-5900-N-00273	OFF-GAS TREATMENT
94X-5900-N-00272	FURNACE AND GEM MACHINE

REV NO.	REASON FOR REVISION - DESCRIPTION	DRAWN	CHECKED	APPROVED / DATE
7	REVISED FROM WALKDOWN LOOP 241. DELETED TE241 AND TIR241 (RELOCATED TO N00272). INDICATED INLET CONNECTIONS FOR LINE WR-4"-A-2201-ET AT TOP OF COOLING TOWER (S-CT-26) PER VENDOR DRAWING 94-22298. ADDED ELECTRIC TRACING TO DRAIN LINE FROM COOLING TOWER PER FERMCO DCN# 1630483.	RAJC RAJC	N/A	4/8/94
6	REVISED IN ACCORDANCE WITH FERMCO MARK-UPS OF THE FOXBORO DACS LOGIC N 314 REV 1. ISSUED FOR CLIENT/OPERATIONAL REVIEW.	HRR FOR APP	N/A	2/25/94
5	DELETED FI248, ZOR269 TO TOTALIZE SYMBOL, DUPLICATION DELETED LOOP 269 REVISED TO AGREE WITH REV 8 LOGICS. ADDED V-WR241, V-WR248, V-WR247, V-RC242, V-RC244, V-WS243, V-WS245, V-WS246 AND V514. RELOCATED V508, V510, AND V511	KDH FOR AR		2/25/94
4	ADDED REF TO HELTER P&ID AND REMOVED NOTE 3	JB 5-15-93	RKK	5-5-93
3	ADDED LINE NUMBER INFORMATION AND NOTES 4 AND 5	JB 05-03-93	RKK 05-03-93	
2	DELETED 8" x 4" REDUCER, ADDED XS261, ZS261, TC260, TSH261, AND TSL261.	APP 11/23/92	RKK 11/23/92	
	REVISED XS260 AND ZS260 TO INDICATE LOW SPEED. ADDED REDUCER, OVERFLOW AND DRAIN			
1	PER FERMCO SCOPE CHANGE OF 2/25/92	JB 5-13-92	RE 5-07-92	RC 5-07-92
0	APPROVED FOR CONSTRUCTION	RAJ 11-1-93	RE 11-2-93	5-18-94

UNITED STATES DEPARTMENT OF ENERGY
FERNALD ENVIRONMENTAL MANAGEMENT PROJECT

THIS DRAWING PREPARED BY
PARSONS
THE RALPH M. PARSONS CO. - PARSONS MAIN INC. - ENGINEERING-SCIENCE, INC.
CINCINNATI, OHIO

Figure A-26 IGN

DRAWING TITLE
MECHANICAL UTILITIES
PIPING AND INSTRUMENTATION DIAGRAM
PROCESS COOLING WATER

DRAWN BY	DATE	TECH CHECKED	DATE	CHECKED BY	DATE
N.PALAN	9-28-93	L. TUCKER	10-1-93	ALLA AZAROVICH	10-4-93

PLANTABLE NO. | FLOOR | SCALE NONE

SUBMITTED FOR APPROVAL	POWER CO. APPROVAL	ISSUED FOR CONSTRUCTION
R.A. ZIEMINSKI 11-1-93	R. CLARKE/R. EMERTON 11-2-93	W. PICKLES 5-18-94

PROJECT UNIT PREFIX PROJECT DRAW NUMBER	DWG PROJECT NO.	TOP PROJECT NO.	DRAWING SHEET CODE NO.	SHEET NO.	REV. NO.
CRU4/P085		WBS 1.1.1.1.4.3.1 00-90701	94X-5900-N-00314	N0013	7

000057

0328

APPENDIX B, WORKSHEETS/FMEA TABLES

Drawing No.:94X-5900-N-00269

Table B.1 VITPP Failure Mode and Effects Analysis (FMEA) Worksheet
Dewatering System

1. Item & Function	2. Failure Mode	3. Failure Cause	4. Local/Plant Effect	5. Method of Detection	6. Safeguard	7. Action Recommended
Dewatering System Function: Maintain homogenous 50 wt% solids content to the Slurry Tanks through agitation and recycle						
1. Thickener Rake Mechanism Function: Continuously operate to "plow" solids to the discharge portion of the Thickener. A rake lift mechanism is provided to raise the rake in the event that the torque on the rake motor is excessive. The rake motor drive is on standby power.	1. Inability to operate	1. Motor, gear box or coupling failure.	Local: Inability to feed to Residue Slurry Pumps. Plant: Potential outage; Melter Feed is not Immediately Impacted	• Stall or "bind" conditions detected by WI-020 high torque alarm. • Coupling failures detected by WI-020 low torque alarm	None	
		2. Power Loss	No significant impacts. The Rake motor os served by the standby power system.		Standby power system.	
2. FV-024; Thickener outlet valve Function: Provide isolation capability in the event that the Residue Slurry Pump develops a leak. Non-routine operation Note: The Premature open failure mode applies to the maintenance condition & is not considered	1. Fails closed	• Loss of instr air • Valve malfunction	Local: No pneumatic pump damage expected. Plant: Potential outage; Melter Feed is not Immediately Impacted	• FI-290 low flow alarm if feeding to Slurry Tank • No flow loss indication if in recycle except ZSL-024 limit switch indication in control room	None	
3. FV-026; Thickener back flush valve Function: Provide isolation capability for back flush operation. Note: Since item is subject to non-routine operation, the loss of the capability to open on demand is not considered.	1. Premature open	• Valve malfunction • Operator error	Local: High water content in the slurry Plant: Remote potential for off-spec glass; Delay until the offspec slurry is recycled back to the Thickener. Melter Feed is not Immediately Impacted	• ZSH-026 valve open indication • Slurry Tank Sampling	Recycle offspec slurry from Slurry Tanks to Thickener.	
4. FV-025; Thickener evacuation valve Function: Provide the capability to evacuate the Thickener during non-routine conditions (leak etc).to the spare storage tank Since item is subject to non-routine operation, the loss of the capability to open on demand is not considered	1. Premature open	• Valve malfunction • Operator error	No significant consequences. The diaphragm Spare Storage Tank Pump is off and prevents flow to the Spare Storage Tank.;	ZSH-025 valve open indication	Turn spare storage tank pump on to clear the line	
5. FV-041/040; Residue Slry Pm Inlet Iso Vlv Function: Provide inlet isolation capability for the Residue Slurry Pumps	1. Fails closed	• Loss of instr air • Valve malfunction	Local: No pneumatic pump damage expected: Activate Redundant pump to restore operation Plant: None	• FI-290 low flow alarm if feeding to Slurry Tank • ZSL-040/041 limit switch indication in control room	Activate Redundant pump to restore operation	

000059

28

Drawing No.:94X-5900-N-00269

Table B.1 VITPP Failure Mode and Effects Analysis (FMEA) Worksheet
Dewatering System

1. Item & Function	2. Failure Mode	3. Failure Cause	4. Local/Plant Effect	5. Method of Detection	6. Safeguard	7. Action Recommended
	2. Premature open	• Valve malfunction • Operator error	No significant consequences. If pump is off no slurry can be inadvertently transferred.	ZSL-040/041 limit switch indication in control room		
6. PM-04 A/B; Residue Slurry Pm Function: Pump is continuously running to provide motive force to transfer slurry from the Thickener to the Slurry Tanks. Redundant pumps provided without auto-restart capability.	1. No flow/ pressure	1. Pump failure	No significant consequences. Redundant pump prevents single failure from impacting operation.	• FI-290 low flow alarm if feeding to Slurry Tank.	Manually start alternate pump. Flush slurry lines.	Consider adding provision to detect low flow when pump is in recycle only mode.
		2. Instrument air valve FY-042/043 fails closed	No significant consequences. Redundant pump and associated air system prevents single failure from impacting operation.	• XS-042/043 control room pump not running indication provides an indication of the solenoid valve (FY-042/043) state; no pump state • FI-290 low flow alarm if feeding to Slurry Tank.	Manually start alternate pump. Flush slurry lines.	
		3. High density shutdown valve DCV- 046 malfunctions close or false high density indication from DIT-021 or DE-021	Local: Loss of air to both pneumatic Residue Slurry Pumps Plant: Potential outage	• FI-290 low flow alarm if feeding to Slurry Tanks • DICR-021 high if DE-021 or DIT-021 fail	Manual bypass around DCV-046	
		4. Power outage causing loss of pneumatic air to both pumps	Local: Loss of ability to recycle and transfer to Slurry Tank. Plant: Plant outage; Melter Feed is not Immediately Impacted	Plant alarms	Although the recycle is lost, the mechanical rake, on emergency standby prevent overflow to recycle system.	
7. FV-044/045 Residue Pm Disch Vlv Function: Provide is isolation capability and prevent backflow when alternate pump is running.	1. Fail closed	Loss of instrument air	No significant consequences. Start redundant pump	• PAH 040/041 High pressure alarm • FI-290 low flow alarm	Start alternate pump train. Flush slurry lines.	
	2. Premature opening	• Valve malfunction.	No significant consequences. If pump is off no slurry can backflow into alternate pump	ZSH-044/045 valve open indication		

000060

629

Drawing No.:94X-5900-N-00269

Table B.1 VITPP Failure Mode and Effects Analysis (FMEA) Worksheet
Dewatering System

1. Item & Function	2. Failure Mode	3. Failure Cause	4. Local/Plant Effect	5. Method of Detection	6. Safeguard	7. Action Recommended
8 FV-047 Function: Normally closed valve is manually opened to allow transfer to Slurry Tanks on a demand basis. (typically after a Slurry Tank is empty). Note 1. Recycle valve FV-048 is interlocked closed when FV- 047 is opened. IE only 1 of the 2 valves are opened at a time. Note 2. A high Slurry Tank level (LSH-290/291) causes valve FV-047 to close per control logic N269 sht 2 (10/25/95)	1. Fail to open on demand or fail closed during transfer	• Loss of instr air • Valve malfunction	Local: Inability to transfer to Slurry Tanks Plant: Potential outage. Melter Feed is not Immediately Impacted	• FI-290 low flow alarm • ZSL-047 Valve closed indication	None	
	2. Premature open	• Interlock/limit switch failure • Air open valve requires malfunction to open. • Operator error	Local: None. Isolation valve at Slurry Tank prevents inadvertent transfer. Plant: No significant consequences	ZSH-047 valve open indication		
9. FV-048 Thickener Recycle isolation valve Function:	1. Fail to open on demand or fail closed during recycle	• Loss of instr air • Valve malfunction	Local: Inability to develop proper slurry characteristics; Plant: Potential outage; Melter Feed is not Immediately Impacted	ZSL-048 valve closed indication	None	
	2. Fail to close on demand	Valve malfunction	Local: Inability to transfer to Slurry Tanks Plant: Potential outage. Melter Feed is not Immediately Impacted	• FI-290 low flow alarm • ZSL-048 Valve open indication	None	
	3. Premature open	• Interlock/limit switch failure • Air open valve requires malfunction to open. • Operator error	Local: Inability to transfer to Slurry Tank Plant: Potential outage; Melter Feed is not Immediately Impacted	ZSH-048 valve open indication	None	
10. Flocculent System. Function: Provide capability to allow solids to settle on the Thickener bottom.	1. No Flow	Pump/motor fails	Local: Potential for solids to overflow into recirculation system Plant: Potential outage	• FI-402 low flow alarm • FQR-402 High total flow alarm Sampling		
	2. Excess flow	Operator error	Local: No significant consequences			

190061

628

Drawing No.:94X-5900-N-00269

Table B.1 VITPP Failure Mode and Effects Analysis (FMEA) Worksheet
Dewatering System

1. Item & Function	2. Failure Mode	3. Failure Cause	4. Local/Plant Effect	5. Method of Detection	6. Safeguard	7. Action Recommended
11. Manual valves; A review of the Dewatering System manual valves showed no significant consequences from valve mis-alignment.						

000062

Drawing No.:94X-5900-N-00270/271

Table B.2 VITPP Failure Mode and Effects Analysis (FMEA) Worksheet
Feed Preparation System

1. Item & Function	2. Failure Mode	3. Failure Cause	4. Local/Plant Effect	5. Method of Detection	6. Safeguard	7. Action Recommended
Feed Preparation System Function: Allow mixing of additive and slurry waste to obtain the proper slurry consistency for transfer to the Melter. The Slurry Tank agitators are on emergency standby power.						
1. FV-290/291 Slurry Tank inlet valves Function: Provide isolation capability	1. Fail closed	• Loss of instr air • Valve malfunction	Local: Inability to transfer to Slurry Tank Plant: Potential outage; Melter feed not immediately impacted	• FI-298 low flow alarm ZSH 290/291 valve closed indication • Control logic dwg N270 Sht 6 (10/25/95) does not show a FQR-290 alarm	None	
	2. Premature opening during a slurry transfer operation	• Valve malfunction	Local: Potential for inadvertent transfer to wrong Slurry Tank resulting in an overfill and flow of slurry thru vent line. Potential for off-spec glass Plant: Slurry fills offgas line downstream of scrubber and blocks offgas flow. Plant outage	• Slurry Tank high Level (LAHH-290/291 and high Weight WIR-290/291 alarms. • ZSH-290/291 valve open indication	• Slurry Tank high Level (LAHH-290/291 shuts off inlet valve FV-047 • Emergency offgas system • Recycle offspec slurry to Thickener	
2. 5-AG-05A/B Slurry Tank Agitator incl coupling, gearbox, and drive Function: Continuously operate to maintain proper slurry characteristics.	1. Inability to operate	1. Agitator motor, gear box or coupling failure.	Local: Inability to obtain proper slurry characteristics; Potential slurry setup Plant: Melter feed immediately impacted	• XS-051/52 indicates a motor failure • Gear box binding will cause a motor trip	None	Operator to shutdown melter feed
		2. Power failure	Local: Inability to obtain proper slurry characteristics; Potential slurry setup; however Agitator is supplied by the Emergency backup system. Plant: Potential outage	ZS-051/52 indicates a power loss to motor	Agitator is supplied by the Emergency backup system.	
3. FV-297; Water Addition Valve Function: Allow Slurry Tank water addition to obtain proper water/solids content	1. Failure to open on demand	• Valve malfunction • Instrument air loss	Local: High solids content in the slurry Plant: Potential loss of production	ZSH-297 valve indication indication	None	
	2. Premature open	• valve malfunction • Operator error	Local: Potential overfill of Slurry Tank causing slurry to flow through the vent line to the offgas line. Potential for off-spec slurry Plant: Slurry fills offgas line downstream of scrubber and blocks offgas flow. Plant outage	• Slurry Tank high Level (LAHH-290/291 and high Weight WIR-290/291 alarms • Totalizer FQR-290 output value • ZSH-297 valve open indication	Recycle offspec slurry from Slurry Tanks to Thickener.	

000063

Drawing No.:94X-5900-N-00270/271

Table B.2 VITPP Failure Mode and Effects Analysis (FMEA) Worksheet
Feed Preparation System

1. Item & Function	2. Failure Mode	3. Failure Cause	4. Local/Plant Effect	5. Method of Detection	6. Safeguard	7. Action Recommended
4. FV-298/299 Slurry Tank Outlet valves Function: Provide isolation capability; Gravity flow to Slurry Tank Pump	1. Fail closed	• Loss of instr air • Valve malfunction	Local: Inability to transfer to Melter Plant: Plant outage	FI-298 low flow alarm ZSH 290/291 valve closed indication	None	
	2. Premature open while alternate tank is feeding Melter	• Valve malfunction • Operator error	No significant consequences; The isolation valves associated with the Slurry Tank Pump must also be mis-aligned in order to inadvertently transfer the offspec slurry to the Melter	• ZSH-290/291 valve open indication		
5. FV-296/292 Slurry Tank Outlet Back Flush Valve Function: Provide isolation capability for back flush operation. Since item is subject to non-routine operation, the loss of the capability to open on demand is not considered.	Premature open	• valve malfunction • Operator error	Local: Poor slurry characteristics to Melter. Melter steam urge possible. Plant: Potential for off-spec glass	• ZSH-296 valve open indication • Melter camera viewing cold cap	EOS protects against melter surge	Operator action to stop melter feed
6. 5-PM-34A/B Slurry Tank Pump Function: Provide slurry transfer capability from the Slurry Feed Tanks to the Melter Feed Pump. Additionally, recycle flow to Slurry Tanks for mixing and transfer of offspec slurry to Thickener. Note: Either pump can withdraw slurry from either Slurry Tank	1 No flow/ pressure	• Pump failure • Line plug	Local: Failure to provide recirculation of slurry in slurry tanks (5-TK-29A/B) permitting settling of solids in bottom of tank (when slurry level below agitator) and in the slurry pipes. Plant: Temporary loss of melter feed if failed pump is circulating the melter feed loop (pumps/tanks alternate feeding melter feed loop).	• PI-343 and PI-341 for recirculation loop (local indicators). • FI-170 low flow alarm for melter feed loop.	Back flush slurry tank(s) and isolate suction leg, backflush slurry line and clear pipes.	Provide low-flow alarm(s) after the discharge of slurry tank pump(s) to monitor the flow during both recirculation and melter feed operations (output to control room).
		2. Instrument air valve ZY-340/342 fails closed	Local: Failure to provide recirculation of slurry in slurry tanks (5-TK-29A/B) permitting settling of solids in bottom of tank (when slurry level below agitator) and in the slurry pipes. Plant: Temporary loss of melter feed if failed instrument valve affects the pump circulating the melter feed loop (pumps/tanks alternate feeding melter feed loop).	• PI-340 and PI-342 (local) • PI-343 and PI-341 for recirculation loop (local). • FI-170 low flow alarm for melter feed loop.	Back flush slurry tank(s) and isolate suction leg, backflush slurry line and clear pipes.	Provide low-flow alarm(s) after the discharge of slurry tank pump(s) to monitor the flow during both recirculation and melter feed operations (output to control room).

0000644

A2 x

Drawing No.:94X-5900-N-00270/271

Table B.2 VITPP Failure Mode and Effects Analysis (FMEA) Worksheet
Feed Preparation System

1. Item & Function	2. Failure Mode	3. Failure Cause	4. Local/Plant Effect	5. Method of Detection	6. Safeguard	7. Action Recommended
		3. Power Loss causing loss of pneumatic air to both pumps	Local: Inability to recycle to Slurry Tanks and to supply slurry to the Melter Plant: Plant outage	XS-340/342 pump status indications in control room	Backflush slurry tank(s) and isolate suction leg, backflush slurry line and clear pipes. Slurry Tank agitator is on emergency backup power to prevent slurry "setup" upon loss of recycle.	
7. FV-347/348 Slurry Tank Recycle isolation valves Function: Provide isolation capability to allow pump recycle to the proper Slurry Tank;	1. Fail to open on demand or fail closed during recycle	• Loss of instr air • Valve malfunction	Local: High Slurry Tank Pump discharge pressure, although no pump damage is expected. Delay in recycle operation Plant: Probable need to discontinue forward floe of melter feed	• ZSL-347/348 indication • Pump discharge pressure alarm PAH-341/343	None	
	2. Premature open	• Operator error • Air open valve requires malfunction to open.	Local: • Potential to recycle to wrong Slurry Tank and allow slurry to flow into Offgas system and block offgas flow. • Inability to transfer to Melter Feed Pump Plant: Potential outage	• High level/weight alarm on alternate tank • ZSL-347/348 valve open indication	• Operating procedure to properly check valve alignment • Recycle offspec slurry to Thickener • Emergency offgas system	
8. Manual Valves V230/231; Thickener Recycle Line Function: A review of the manual valves showed that the only deviation of a concern was the premature opening of the manual valve in the Thickener recycle line.	1. Premature open	• Operator error	Local: Transfer of Conditioned Slurry to the Thickener Plant: Delay in production until a new batch is formulated Note: Thickener should have sufficient volume capacity to accommodate the inadvertent transfer	Low Slurry Tank level/weight alarms	Operating procedures to properly check valve alignment	

0000065

628

Drawing No.:94X-5900-N-00270/271

Table B.2 VITPP Failure Mode and Effects Analysis (FMEA) Worksheet
Feed Preparation System

1. Item & Function	2. Failure Mode	3. Failure Cause	4. Local/Plant Effect	5. Method of Detection	6. Safeguard	7. Action Recommended
9. FV-170; Melter Feed Valve Function: Provide Melter feed capability	1. Fail to open on demand or fail closed during transfer	• Loss of instr air • Valve malfunction	Local: Inability to transfer to Melter. No damage to Melter Feed Pump anticipated Plant: Plant outage	• ZSL Valve Closed indication • Decrease in gem production rate. • Camera View of Melter cold cap	None	Because of the lag time between a feed loss and its detection via a decrease in gem production, consider providing a low melter feed rate alarm to allow operators to better respond to system upsets.
	2. Premature open	Air open valve requires malfunction to open.	Local: None. Melter Feed Pump should prevent inadvertent flow to Melter. Plant: None	XS-170 Valve status indication		

000066

628

Drawing No.:94X-5900-N-00529/530

Table B.3 VITPP Failure Mode and Effects Analysis (FMEA) Worksheet
Additive Transfer

1. Item & Function	2. Failure Mode	3. Failure Cause	4. Local/Plant Effect	5. Method of Detection	6. Safeguard	7. Action Recommended
Additive Transfer Function: Allow manual loading of "bagged" additives for pneumatic transfer to Additive Filter/Receiver where the additive is gravity fed (via Rotary Air Locks) to the designated Slurry Tank.						
1 Bag Dump Station & Pneumatic Conveyance to Additive Filter/Receiver: Function: Allow operators to manually load "bagged" additives for pneumatic conveyance to the Additive Filter/Receiver. Station is equipped with a filter and vacuum blower to limit the dust released. Pulse air provided to clean station filter.						
1a. Bag Dump Station Filter Vacuum Blower Function: Provide method to prevent additive dust from being released to the environment	1. Inability to operate	motor or fan fails	Local: Potential additive dust release upon additive input A temporary tent can be installed to reduce the potential dust release. Plant: No plant outage			
1b. Filter Pulse Air Function: Provide method to clean Bag Dump Station bag filter.	1. PCV-645 fails closed	Valve malfunction	No significant consequences; Failure does not impact ability to load bagged additive			
	2. PCV-645 fails open	Valve malfunction	No significant consequences; Excessive loss of instrument air			
2. 5-BL-66 - Vacuum Blower Package Function: Provide method to convey additive from Bag Dump Station to Additive Filter/Receiver. Blower is equipped with a prefilter and a HEPA filter.	1. No/low flow	1. Blower malfunction	Local: Inability to convey additive to Additive Filter/Receiver. Plant: Potential plant outage. No immediate Melter impact. Melter Feed continues while repair occurs.	• LAL-650 • Inability to transfer additive is obvious to operators at Bag Dump Station	None	
		2. HEPA Filter plugged due to operator not changing out HEPA filter.	same as above	• Local PDI-660 indicates HEPA plugged • Inability to transfer additive is obvious to operators at Bag Dump Station	Operator change out of HEPA upon indication of high differential pressure.	
		3. Prefilter Plugged	Local: Same as above	Inability to transfer additive is obvious to operators at Bag Dump Station	None	
3. 5-DC-65 - Additive Filter Receiver Function: Provide method to collect additive dust for gravity transfer to Slurry Tank. Pulse air provided to remove dust from bag filter.	1. Filter bag breaks	1. Erosion/wear	Local: Additive dust flows through filter and collects on prefilter. Prefilter protects blower from dust erosion. Extensive clean out of pneumatic piping required. Plant: Potential plant outage. No immediate Melter impact. Melter Feed continues while repair occurs.	Local PDI-660 indicates HEPA plugged	None	

Drawing No.:94X-5900-N-00529/530

Table B.3 VITPP Failure Mode and Effects Analysis (FMEA) Worksheet
Additive Transfer

1. Item & Function	2. Failure Mode	3. Failure Cause	4. Local/Plant Effect	5. Method of Detection	6. Safeguard	7. Action Recommended
	2. Filter Plugs	1. PDSH-650 fails to activate Pulse Air 2. PCV-650 fails closed 3. Isolation valve V-450 inadvertently closed	Local: Inability to convey additive to Additive Filter/Receiver. Plant: Potential plant outage. No immediate Melter impact. Melter Feed continues while repair occurs.	Inability to transfer additive is obvious to operators at Bag Dump Station	None	
4. 5-RV-71 Rotary Airlock Function: Provide method to allow additive to gravity flow to Slurry Tanks as well as isolation capability	1. Fails to operate	Motor failure	Local: Inability to convey additive to Slurry Tanks Plant: Potential plant outage. No immediate Melter impact. Melter Feed continues while repair occurs.	• ZS-710 control room running status indication • No increase in Slurry Tank Weight is an indication of Air Lock Failure.	None	
5. 5-VL-18 Diverter valve Function: Provide method to direct additive to either Slurry Tank as needed	1. Fails to activate	1. ZY-180 Valve malfunction 2. PCV-180 fails closed	Local: Potential to transfer to incorrect Slurry Tank. Excess glass formers in Slurry. Plant:. Potential delay in Melter feed while additionally Thickener Slurry/water is added to compensate for excess glass formers.	Operators are alerted because Slurry Tank Weight does not increase as expected.	None	

000068

628

Table B.4 VITPP Failure Mode and Effects Analysis (FMEA) Worksheet

Drawing No.:94X-5500-N-00962; 5900-N-00891/00272 **Melter System**

1. Item & Function	2. Failure Mode	3. Failure Cause	4. Local/Plant Effect	5. Method of Detection	6. Safeguard	7. Action Recommended
Melter System Function: Provide containment, proper temperature ns sufficient residence time to allow waste vitrification and the generation of gems						
1a. 5-PM-17C, Melter Feed Pump (MFP) Function: Provide adjustable rate transfer capability from the Slurry Pumps to the Melter. Manual speed set point provided	1. No flow/ pressure	1. Motor or pump failure	Local: Loss of Melter feed capability Plant: Potential outage	• Melter camera viewing the cold cap • Loss of glass flow from Melter discharge chamber	Warehouse spare provided. "Quick" pipe connections to facilitate replacement	Because of the lag time between a feed loss and its detection via a decrease in gem production, consider providing a Melter low feed rate alarm to allow operators to better respond to system upsets. This recommendation also applies to Feed Preparation FMEA - Melter Feed Valve (FV-170)
		2. Power loss	Local: Loss of Melter feed capability Plant: Plant outage	Numerous plant alarms	Place Melter in idle	
	2. Plugged discharge line	1. Slurry "baking" on inner discharge line wall 2. Operator fails to initiate MFP flush system after stopping MFP	Local: High Melter Feed discharge pressure resulting in a seal leak. Plant: Contamination release	Local alarm PSH-174 (Dwg 272);		• Consider an interlock to shutdown the MFP on high pressure to prevent a seal leak in the event the discharge line should plug • Determine if PSH-174 (Dwg-272) can provide a high discharge pressure alarm in the control room.
	2. Excess Flow Rate	1. Operator error - Erroneous feed rate set point	Local: Excess solid formation on top of Melter. In worst case solids accumulate in the Melter head space. Moisture content of feed material expected to vaporize. Steam evolution rate for this event bound by flush system manual valve open (see Item&Function 2b). Plant: Potential long term outage	• No immediate detection; however, MFP is shutdown on high Melter discharge chamber level via LAH-170 • Operator views Melter glass through camera • PDIC-520 high Melter differential pressure alarm • PDIS-170 high Melter differential pressure alarm	• MFP shutdown on high Melter discharge chamber level via LAH-170 • Operating procedures to closely monitor Melter upper glass layer with camera	

000069

628

Table B.4 VITPP Failure Mode and Effects Analysis (FMEA) Worksheet

Drawing No.:94X-5500-N-00962; 5900-N-00891/00272 **Melter System**

1. Item & Function	2. Failure Mode	3. Failure Cause	4. Local/Plant Effect	5. Method of Detection	6. Safeguard	7. Action Recommended
1.b V-224/V-SL-097 Melter Feed Pump Manual Valves Function: Provide isolation capability during Melter Feed Pump repair	1. Valve closed	Operator error	Local: High Melter Feed discharge pressure resulting in a seal leak. Plant: Contamination release	Local alarm PSH-174 (Dwg 272);	Operating procedures to check valve alignment after performing a maintenance operation	• Consider an interlock to shutdown the MFP on high pressure to prevent a seal leak in the event the discharge valve is inadvertently closed.
1c. Melter Feed Pump Seal Water System Note: This system is not detailed sufficiently to evaluate at this time.	1. Loss of seal water	• Operator error - manual valve inadvertently closed • Seal Water Tank level water inlet failure -level gauge failure				
2a. FV-171 Melter Feed Pump (MFP) flush valve Function: Provide manual capability to flush the Melter Feed Pump and its outlet line after Melter Feed Pump is shutdown to prevent slurry from drying and plugging line. Operator manually allows water to flow through pump for a predetermined amount of time.	1. Premature open or valve open too long	• Valve malfunction • Operator error	Local: Potential for long term water addition to Melter if the valve is open and a) pump left on b) if the pump is off water may leak through pump seals. The high steam evolution rate may cause a Melter pressure excursion and a transfer to the Emergency Offgas system. Plant: Potential for offgas release if the Emergency; Offgas System cannot handle the increased flow rate.	• ZSH-171 valve open indication • Melter camera • PDIC-520 high Melter differential pressure alarm • PDIS-170 high Melter differential pressure alarm	• Operating procedures to closely monitor water flow and Melter upper glass layer • Emergency Offgas system • Rupture disk OS-350 protects against a Melter rupture	Determine if continued full water flow rate thru M F P (both seal water valve open & pump inadvertently on) or a leak through MFP seals (if MFP off & seal water valve left open) can cause an undesirable condition. If necessary, consider adding an automatic system with an independent monitoring capability (totalizer or shutdown after time delay).
	2. Failure to open on demand	• Valve malfunction • Operator error (Operator fails to initiate flush after pump stops)	Local: Potential blockage of feed line and a high MFP discharge pressure, upon MFP restart and a potential seal leak. Plant: Contaminated slurry release and Plant outage	• Local alarm PSH-174 (Dwg 272) detects high MFP discharge pressure • ZSH-171 valve closed indication	• Operating procedures to flush line after shutting off Melter Feed Pump. • Dismantle and "rod-out" pipe.	Consider adding flow indicator on flush line prior to FV-171.

000070

628

Table B.4 VITPP Failure Mode and Effects Analysis (FMEA) Worksheet

Drawing No.:94X-5500-N-00962; 5900-N-00891/00272 **Melter System**

1. Item & Function	2. Failure Mode	3. Failure Cause	4. Local/Plant Effect	5. Method of Detection	6. Safeguard	7. Action Recommended
2b. V-SL-098 Melter Feed Pump (MFP) flush system manual valve Function: Supply the Melter feed line down stream of the MFP to provide increased flow rate capability (versus the low flow rate through the MFP) to dislodge severe pluggage. This valve is not expected to experience routine operation Note: A review of the manual valves associated with the MFP flush system showed concern for only the above mentioned valve.	1. Valve open	Operator error	Local: Potential for long term water addition to Melter if valve left open . The high steam evolution rate may cause a Melter pressure excursion and a transfer to the Emergency Offgas system. Plant: Potential for offgas release if the Emergency Offgas System cannot handle the increased flow rate.	• Melter camera • PDIC-520 high Melter differential pressure alarm • PDIS-170 high Melter differential pressure alarm	• Emergency Offgas system • Rupture disk OS-350 protects against a Melter rupture • Operating procedures to closely monitor flush water flow and Melter upper layer with camera.	Provide administrative controls that require operator to verify operation/positioning of this valve prior/after to use.
3a. Side Feeder (East, West); Provide method to increase glass inventory to the side electrode chamber.	1. Excess Glass	Operator error	No significant consequences; Side chamber overflows to center chamber	None	Operator Training and procedures	
	2. No glass added when required	Operator error	Local: Electrodes exposed to an oxidizing environment. Potential electrode fire. Plant: Potential plant outage	Melter low level indication	• Operator Training and procedures. • Replace electrodes if necessary	
3b. Center Chamber Feeder; Provide method to add glass formers to increase glass inventory.	1. Excess Glass	Operator error	No significant consequences; The small Chamber "pot" size limits the quantity to a tolerable level.	None		
	2. No glass added when required	Operator error	No significant consequences; Non-routine operation	None		

4. Closed Loop Cooling System
Function: Provide closed loop method of cooling Melter electrodes, feed tubes, IR detector, drains and Gem Production components that may potentially contain radioactive material. Per discussions with FERMCO engineers, all components except the IR detector can tolerate at least an hour of cooling water outage. The electrode holders could incur 2 hours before a leak occurs. Cooling water is supplied to the Fill Tubes primarily to avoid baking the input material (IE no structural requirement). Because of the cold Melter exterior, drains will not leak glass to the outside on loss of cooling water; however loss of cooling water may allow glass to migrate into the refractory and shorten the Melter's life.

Redundant Radiator Cooler Pumps, with auto.-start capability and power provided from the Emergency backup system (94X-5900-E-00416/417). Per Control Logic dwgs N891, Sht 1A (10/19/96), the Radiator Cooler Pumps are shut off after the closed loop cooling water system experiences a low pressure for 3 seconds. Subsequent to this event the emergency "once-through" system is activated as mentioned below.

Backup cooling water protection is provided via a potable water connection in the event that the closed loop system fails. Per Control Logic dwgs N891, Sht 1 (10/19/96), low pressure detected by PIR-540, activates the emergency backup cooling system. As mentioned above, PIR-540 also shuts off the Radiator Cooler Pumps to prevent cavitiation.

000071

628

Table B.4 VITPP Failure Mode and Effects Analysis (FMEA) Worksheet

Drawing No.:94X-5500-N-00962; 5900-N-00891/00272 **Melter System**

1. Item & Function	2. Failure Mode	3. Failure Cause	4. Local/Plant Effect	5. Method of Detection	6. Safeguard	7. Action Recommended
4a 5-PM-5 Radiator Cooler Pump Function: Provide method to circulate cooling water through closed loop system. Note: Redundant Cooler Pumps supplied by the emergency backup power are provided. Pump auto-start capability is provided.	1. No Flow/ Pressure	1. Motor or Pump Failure	No significant consequences. Redundant Radiator Cooling Pump on auto-standby as well as emergency potable water supply.	PIR-540 Low Pressure alarm.	• Redundant Pump; • Emergency potable water supply	
		2. Power failure	No significant consequences; Pumps are on the emergency backup power system also Emergency "once-through" Cooling Water system provides protection	Numerous power failure alarms	• Pumps are on the emergency backup power system • Low cooling water pressure activates the Emergency "once-through" Cooling Water system	
4b. Radiator Cooling Fan Function: Provide air flow across the radiator exchanger to cool the cooling water. The fan is activated by TSH-540.	1. Loss of air flow	1. Motor or fan failure 2. TSH-504 fails low	Local: Overheat of Melter components; potential elevated pressure if the water temperature exceeds its boiling point. Plant: Plant outage	• Individual Melter component temperature indication. No alarms provided. • Local cooling water high temperature alarm TI-023	None; Operator does not have a control room alarm to alert him of the over temperature condition. If the operator were aware of the problem he could: • Place Melter in idle • Initiate the Emergency "once-through" Cooling Water system	• Consider adding a control room high cooling water temperature alarm to allow the operator to more quickly respond to temperature upsets.
		3. Power failure	Local: Residual Melter heat may damage component; however, Emergency "once-through" Cooling Water system provides protection Plant: None	• Numerous power failure alarms • Local Melter component temperature indication	• Place Melter in idle • Initiate the Emergency "once-through" Cooling Water system	
Radiator Function: Provide sufficient surface area to dissipate heat from Closed loop cooling system.	1. Radiator fouling	External debris, dust, or internal corrosion	Local: Overheat of Melter components Plant: Plant outage if not detected.	Gradual temperature rise detected in Melter temperature devices.	Radiator checks during plant scheduled downtime.	

000072

628

Table B.4 VITPP Failure Mode and Effects Analysis (FMEA) Worksheet

Drawing No.:94X-5500-N-00962; 5900-N-00891/00272 **Melter System**

1. Item & Function	2. Failure Mode	3. Failure Cause	4. Local/Plant Effect	5. Method of Detection	6. Safeguard	7. Action Recommended
	2. Radiator Leak	Corrosion	Local: Loss of Cooling Water; Only a small leak is anticipated. Plant: Plant outage to repair	Operator routine inspection	Emergency Cooling Water System	
4d. Surge Tank for closed loop cooling system Function: Provide method to reduce pressure/ flow fluctuations and to relieve the system in the event of an overpressure condition through the 15 psi "cap".	1. Inability to respond to system pressure upsets	Manual valve V-513 inadvertently closed through operator error	Local: Inability to relieve system pressure in the event radiator fan cooling or the pump is lost. Potential Closed cooling water system overpressure rupture such that the emergency "once-through" system may not be able to provide cooling to critical components. Plant: Potential Melter glass release through electrode holders	None	None	Consider installing a pressure relieving device on the cooling loop side of V-513.
5. Backup ("Once-Through") Emergency Water System Function: Per logic drawing N891 (10/19/96) the following logic applies: a) Detect low cooling water pressure by PIR-540 b) Open FV-542 & FV-541 to establish potable water flow thru system c) Close FV-548 to prevent potable water flow to potential leaks in radiator or pumps. Per Control Logic dwgs N891, Sht 1A (10/19/96), the Radiator Cooler Pumps are shut off after the closed loop cooling water system experiences a low pressure for 3 seconds in order to prevent pump cavitation. Note: 1. The failure mode of this protective system is evaluated for single point failure assuming that a functional demand has been place on the system. 2. It cannot be determined if FV-542 is electrically or pneumatically activated. Dwg 5500-N-00962 shows FV-542 to be pneumatically activated; 5900-N-00891 shows it to be electrically activated.						
5.a Low Pressure Detection Devices - PIT-540, PIR-540 & interposing relay Function: Provide detection of Cooling water low pressure to initiate valves FV-542/540/541 status change	1. Fail to activate on demand	1. PIT-540, PIR-540 fails high or interposing relay failure	Local: Inability to cool Melter components causing a) failure of IR detector; b) potential migration of glass into refractory at Melter drains c) Gem solidification in their containers d) A release of glass at the electrode holders after several hours without cooling water. Plant: Plant outage; potential glass release.	• Melter component temperature indication devices (no control room alarm)	None	• Since PIT-540, PIR-540 & interposing relay can have a "dormant" or hidden failure, consider placing these devices on the critical proof testing schedule. • Consider adding a low flow alarm (output to control room) from FS-002 to monitor the flow of the emergency "once-through" detection cooling water system and provide redundant.

000073

329

Table B.4 VITPP Failure Mode and Effects Analysis (FMEA) Worksheet

Drawing No.:94X-5500-N-00962; 5900-N-00891/00272 **Melter System**

1. Item & Function	2. Failure Mode	3. Failure Cause	4. Local/Plant Effect	5. Method of Detection	6. Safeguard	7. Action Recommended
	2. Premature activation	• Operator error • Instrument malfunction	No significant consequences. The Radiator Cooler Pumps are shut off after the system experiences a low pressure for 3 seconds to prevent pump cavitation.	FV-540/540/542 change of status indication	None	
5.b F.V.-540 Emergency once thru valve Function: Close upon activation of the emergency backup (once thru) system to prevent potable water from flowing to potential leaks in the primary cooling water loop.	1. Fail to close on demand	• Valve malfunction	Local: • If the loss in pressure is due to a leak in the primary cooling loop the failure of the valve to close will continue water flow to the leak and spill on to the floor. • If the pressure loss is due to non-leak problems then the effectiveness of the emergency backup system will not be impaired by the failure of the valve to close Plant: Delay in restarting the plant	XS-540 open status indication in the control room	None	
	2. Premature close	• Loss of electrical power • Valve malfunction • Operator error	Local: Inability to cool Melter components causing a) failure of IR detector; b) potential migration of glass into refractory at Melter drains c) Gem solidification in their containers d) A release of glass at the electrode holders after several hours without cooling water. Plant: Plant outage; potential glass release.	• Melter component temperature indication devices. (No control room indication)	None	Consider adding a low flow alarm (output to control room) from FS-002 to monitor the flow of the emergency "once-through" detection cooling water system.
5.c. FV-541 Function: Open upon activation of the emergency backup (once thru) system to allow flow to spill containment	1. Fails to open on demand	• Valve malfunction	Local: Inability to cool Melter components causing a) failure of IR detector; b) potential migration of glass into refractory at Melter drains c) Gem solidification in their containers d) A release of glass at the electrode holders after several hours without cooling water. Plant: Plant outage; potential glass release.	Melter equipment temperature indication(electrode holder, drain, feed tube) TI indication	None	Same as 5.b Failure Mode # 2 " Premature Close"

000074

628

Table B.4 VITPP Failure Mode and Effects Analysis (FMEA) Worksheet

Drawing No.:94X-5500-N-00962; 5900-N-00891/00272 **Melter System**

1. Item & Function	2. Failure Mode	3. Failure Cause	4. Local/Plant Effect	5. Method of Detection	6. Safeguard	7. Action Recommended
	2. Premature open	• Electrical power loss • Valve malfunction • Operator error	Local: Loss of Cooling water flow;. Pump pressurizes system until inlet flow stops. Once pump outlet pressure is reduced, the emergency backup system is activated to protect Melter equipment. The Radiator Cooler Pumps are shut off after the system experiences a low pressure for 3 seconds to prevent pump cavitation. Plant: Plant outage;	No immediate detection of the valve inadvertently opening; however, PIR-540 Low Pressure alarm will initiate the emergency back-up water before Melter components are damaged by heat.	• Emergency cooling water system protects Melter components from over temperature	
5.d. FV-542 Emergency Potable water valve Function: Open on low pressure to cool electrodes.	1. Fails to open on demand	• Valve malfunction	Local: Inability to cool Melter components causing a) failure of IR detector; b) potential migration of glass into refractory at Melter drains c) Gem solidification in their containers d) A release of glass at the electrode holders after several hours without cooling water. Plant: Plant outage; potential glass release.	Melter equipment temperature indications (electrode holder, drain, feed tube) TI indications (No control room indication)	None	
	2. Premature open	• Instrument air loss • Valve Malfunction	Local: Potential for closed loop water to be transported into Process Water system depending upon differential pressure between the two systems Plant: Potential contamination transfer to process water.	XS-542 Open status in control room	• Air gap protective device in potable water system (Dwg 272) prevents potable water contamination; however, process water is vulnerable to contamination • Check valve in process water line although it has a high potential to leak over the plant's life.	Determine if the pressure differential allows closed loop water to enter the process water system in the event that FV-542 inadvertently opens.

000025

628

Table B.4 VITPP Failure Mode and Effects Analysis (FMEA) Worksheet

Drawing No.:94X-5500-N-00962; 5900-N-00891/00272 **Melter System**

1. Item & Function	2. Failure Mode	3. Failure Cause	4. Local/Plant Effect	5. Method of Detection	6. Safeguard	7. Action Recommended
6. Electrode SCR control Function: Provide controlled source of energy to electrodes to maintain proper glass temperature. Note: Feed abnormalities (chemistry, quantities) are not considered	1. Output Failure or low power output	1. Internal SCR Short/Open, malfunction	Local: Potential for Melter glass freeze Plant: Loss of production	Numerous glass temperature indications as well as SCR alarms	The Melter insulation should minimize heat loss allowing sufficient time to replace the SCR.	
		2. Power failure	Local: Potential for Melter glass freeze Plant: Loss of production	Numerous glass temperature indications as well as SCR alarms	The Melter insulation should minimize heat loss allowing sufficient time to restore power	
	2. Fail Excess current	1. SCR control malfunction or operator error	Local: Potential electrode sag as well as corrosion Plant: Potential plant outage to replace electrode if electrode is severely damaged.	Numerous glass temperature indications as well as SCR alarms	Operating procedures to closely monitor Melter temperature devices; Replace electrode if damaged.	
		2. Electrode phase to ground short	Local: Potential electrode damage Plant: Potential outage to replace electrode.	Electrode temperature indications	Fuse protects SCR from damage; Replace electrode if damaged.	
		3. High glass conductivity	Local: Potential electrode sag as well as corrosion Plant: Potential plant outage to replace electrode if electrode is severely damaged.	Numerous glass temperature indications as well as SCR alarms	• Use higher transformer tap to reduce voltage	
7. Discharge Heater SCR control & element Function: : Provide controlled source of heat to maintain proper discharge chamber glass viscosity.	1. Output Failure or low power output	1. Short/Open	Local: High glass viscosity causing poor glass form quality Plant: Reduced gem output	Discharge chamber head space and glass temperature indication, as well as SCR alarms	The Melter insulation should minimize heat loss: The discharge chamber heater is capable of remelting the glass should it freeze.	

000076

628

Table B.4 VITPP Failure Mode and Effects Analysis (FMEA) Worksheet

Drawing No.:94X-5500-N-00962; 5900-N-00891/00272 **Melter System**

1. Item & Function	2. Failure Mode	3. Failure Cause	4. Local/Plant Effect	5. Method of Detection	6. Safeguard	7. Action Recommended
		2. Power failure	Local: High glass viscosity causing poor glass form quality Plant: Reduced gem output	Discharge chamber head space and glass temperature indication, as well as SCR alarms	The Melter insulation should minimize heat loss: The discharge chamber heater is capable of remelting the glass should it freeze.	
		3. Heater Element Open circuit due to corrosion	Local: High glass viscosity causing poor glass form quality Plant: Reduced gem output	Discharge chamber head space and glass temperature indications as well as SCR alarms	The Melter insulation minimize heat loss: Upon repair, the discharge chamber heater is capable of remelting the glass should it freeze.	
	2. Fail Excess Energy	1. SCR control malfunction or operator error (frequency increase)	Local: Potential element damage Plant: Potential outage	Discharge chamber head space and glass temperature indications as well as SCR alarms	If the element is damaged, the Melter insulation minimizes heat loss: Upon repair, the discharge chamber heater is capable of remelting the glass should it freeze.	
		2. Heater element phase to ground short circuit	Local: Potential element damage Plant: Potential outage	Discharge chamber head space and glass temperature indications as well as SCR alarms	The Melter insulation minimize heat loss: Upon repair, the discharge chamber heater is capable of remelting the glass should it freeze.	

000077

628

Table B.4 VITPP Failure Mode and Effects Analysis (FMEA) Worksheet

Drawing No.:94X-5500-N-00962; 5900-N-00891/00272 **Melter System**

1. Item & Function	2. Failure Mode	3. Failure Cause	4. Local/Plant Effect	5. Method of Detection	6. Safeguard	7. Action Recommended
8. Bottom Drain Function: Motorized bottom drain provide capability to evacuate Melter if a long term outage is anticipated. Drain opening is achieved by stopping cooling water flow and using motorized "RAM" to punch a hole in the glass.	1. Fails to Open on Demand	1. Motor failure	Local: Inability to drain resulting in a full Melter freeze Plant: Extensive restoration time	Observation Drain closed status indication in control room	The Melter insulation should minimize heat loss: Motor can be replaced before a full freeze occurs.	
	2. Premature Open	1. No causes found. Discussions with FERMCO engineers indicate that if the cooling water is lost, the cold Melter exterior prevents solidifies glass flow to prevent a leak.				
9. Side (Surface Drain) Function: Evacuate salt from upper Melter layer Note: This drain will not be used during the 1 ton/day operation per Rod Gimple.	N/A					
10. Main Chamber Bubblers Function: Five bubbler tubes provide method to mix Melter contents. Note: Discussions with FERMCO engineers indicate that local air bottles will be used to back up the instrument air. These bottles and their connection location to the instrument air piping is not shown on drawings.	1. Loss of air flow	1. UA-R001 fails closed due to malfunction or operator error	Local: Glass flows into all bubblers lines and plugs lines. Plant: Plant outage to replace	Local flow indication devices; No control room indication	Bubblers cannot be repaired without draining Melter.	Valve maintenance cannot be performed without shutting off bubbler air supply. Consider a parallel air line with a second pressure regulator to improve supply reliability and allow valve maintenance
		2. Manual Valve UA-V-002, V-001, V-1006 inadvertently closed due to operator error	Local: Glass flows into all bubblers lines and plugs lines. Plant: Plant outage to replace	Local flow indication devices; No control room indication	• Operating procedures to check valve alignment at startup and at end of each maintenance operation	Consideradministrative control procedure to lock open Manual Valves UA-V-002, V-001, V-1006.

000078

628

Table B.4 VITPP Failure Mode and Effects Analysis (FMEA) Worksheet

Drawing No.:94X-5500-N-00962; 5900-N-00891/00272 **Melter System**

1. Item & Function	2. Failure Mode	3. Failure Cause	4. Local/Plant Effect	5. Method of Detection	6. Safeguard	7. Action Recommended
		3. Line plug from debris	Local: Glass plugs individual line. Melter can operate with two of the five tubes failed Plant: Potential longer vitrification time	Local flow indication devices; No control room indication	The Melter can operate with the loss of two of the five bubbler tubes	
	2. Excess air flow	1. UA-R001 fails open due to malfunction.	No significant consequences; Rotameter restricts flow to acceptable limit	Local flow indication devices; No control room indication	Rotameter restricts flow to acceptable limit	
11. Lift Chamber Bubbler Function: Provide method to regulate glass flow to the Discharge Chamber. Two parallel air paths provided. A constant air flow maintained thru manual valve side to keep glass from filling tube; UV-103 opens to increase flow to discharge chamber and allow glass flow to discharge chamber. Note: The flow rate in UV-103 line is restricted by a rota meter.	1. Loss of air flow	1. UA-R002 fails closed due to malfunction.	Local: Lift chamber bubbler fills with glass as well as Inability to flow glass in to the discharge chamber. Plant: Plant outage to repair	Local flow indication devices; No control room indication	• Install "top-inserted" backup air lift lance. Main Lift Chamber Bubbler cannot be repaired without draining Melter.	Valve maintenance cannot be performed without shutting off bubbler air supply. Consider a parallel air line with a second pressure regulator to improve supply reliability and allow valve maintenance
		2. UA-013 fails closed due to solenoid failure or valve malfunction	Local: Inability to flow glass into discharge chamber Plant: Potential outage to replace valve	• Local flow loss indication; • The loss of glass flow to the discharge chamber and the associated loss of gem production will alert operators	Replace defective valve	
	2. Excess air flow	1. Operator error Note: Both Rota meter and UV-103 must fail in order to get excess flow thru mechanical means	Local: Excess glass flow to discharge chamber and Gob Roller Plant: Potential for larger size gems which may stick together on the Gem Conveyor. Offspec gems	• Local instrument air flow indication devices; • Operators view output to Gem Cuter and Gem Conveyor via camera	• Operating procedures to monitor glass flow from Melter via camera • Rota meter and UV-103 restrict flow. Both must fail in order to get excess flow from mechanical means	

000079

628

Table B.4 VITPP Failure Mode and Effects Analysis (FMEA) Worksheet

Drawing No.:94X-5500-N-00962; 5900-N-00891/00272 **Melter System**

1. Item & Function	2. Failure Mode	3. Failure Cause	4. Local/Plant Effect	5. Method of Detection	6. Safeguard	7. Action Recommended
11. Gem Forming Function: Provide capability to make gem product	1. Inoperable	Gob Cutter, Gob Roller failure	Local: Redundant monolith system. Plant: None	Machine failure indication	None	
	2. Inability to covert to monolith	Diverter valve malfunction	No significant consequences. The diverter valve is equipped with redundant diverter valves and associated solenoid activation valves.			

000080

628

Drawing No.:94X-5900-N-00274

Table B.5 VITPP Failure Mode and Effects Analysis (FMEA) Worksheet
Waste Water System

1. Item & Function	2. Failure Mode	3. Failure Cause	4. Local/Plant Effect	5. Method of Detection	6. Safeguard	7. Action Recommended
Function: Provide source of water for Quench Tower (cooling), Slurry Tank (water addition) and flush capability of slurry lines with plugging potential						
1. 5-PM-09 A/B - Recycle Water Pump Function: Primary and backup pumps with auto-start capability. The pumps are prevented from shutting down if the Quench Tower inlet offgas temperature is above the low point setting (TI-071). Pumps develop a pressure of 250 psi to convey recycle water to the Quench Tower, Slurry Tanks and flush lines. Note: The loss of flow to the Quench Tower presents the most immediate concern due to loss of Offgas cooling.	1. No flow/ pressure	1. Pump failure	No significant consequences; Redundant pump provided	FIC-070 Quench Tower low spray water alarm.	Redundant pump provided	
		2. Pump inlet manual valve V314 inadvertently closed due to operator error.	Local: • Loss of flow to both Recycle Water Pumps and a loss of Quench Tower spray water resulting in a high off-gas temperature causing a high Scrubber liquid temperature and evaporation rate and a corresponding low Scrubber liquid level leading to potential Scrubber Recirculation Pump cavitation • Potential Recycle Water Pump cavitation and damage. Plant: Plant outage	• FIC-070 Quench Tower low spray water alarm. • TIR-072 high offgas temperature alarm	Operating procedures to properly align valves after a maintenance operation and prior to startup	
		3. Pump inlet manual valve V-315/319	Local: • Loss of flow to a single Recycle Water Pump; Operator must correct valve alignment or Restart alternate pump. • Potential pump cavitation and damage. Plant: None	• FIC-070 Quench Tower low spray water alarm. • TIR-072 high offgas temperature alarm	Operating procedures to properly align valves after a maintenance operation and prior to startup	

000081

628

Drawing No.:94X-5900-N-00274

Table B.5 VITPP Failure Mode and Effects Analysis (FMEA) Worksheet
Waste Water System

1. Item & Function	2. Failure Mode	3. Failure Cause	4. Local/Plant Effect	5. Method of Detection	6. Safeguard	7. Action Recommended
		4. Pump discharge manual valve V-317/321	Local: • Potential pump overheat and seal damage. • Loss of flow from a single Recycle Water Pump; Operator must correct valve alignment or Restart alternate pump. Plant: None; Redundant system	• FIC-070 Quench Tower low spray water alarm. • TIR-072 high offgas temperature alarm	Operating procedures to properly align valves after a maintenance operation and prior to startup	
2. Recycle Water Flow to Silo Residue Removal Pumps. Note: As mentioned in the FMEA assumptions, this operation is not addressed in the Pilot Plant FMEA.						
3. PCV-090 - Pressure Control Valve and manual bypass valve V-325 Function: Decrease pressure form 250 psi to 100 psi to better allow downstream PCV-091 to regulate pressure to Quench Tower and Waste Water Filter to 70 psi.	1. Fails closed	Valve malfunction	Local: High off-gas temperature causing a high Scrubber liquid temperature and evaporation rate and a corresponding low Scrubber liquid level leading to potential Quench Tower Pump cavitation Plant: Plant outage	• FIC-070 Quench Tower low spray water alarm. • TIR-072 high offgas temperature alarm	Operator response to alarms should correct in time to avoid a plant outage.	
	2. PCV-090 Fails open	valve malfunction	Local: Potential undetected 250 psi pressure at PCV-091 inlet as PCV-091 takes the full (250 - 70 psi) pressure drop. If this condition persists undetected for a long duration, PCV is vulnerable to failing "open" and over-pressuring the Waste Water Filter. Plant: No immediate plant impacts	Local PI-092	• PSV-090 • Waste Water Filter PSV-030/031 • Operator shift check of PI-092	
	3. Manual valve V-325 inadvertently open	Operator error	Same as above	Same as above	Same as above	
4. PCV-091 - Pressure Control Valve and manual bypass valve V-330 Function: Decrease pressure form 100 psi to 70 psi to regulate water supply pressure to Quench Tower and Waste Water Filter to 70 psi.	1. Fails closed	Valve malfunction	Local: High off-gas temperature causing a high Scrubber liquid temperature and evaporation rate and a corresponding low Scrubber liquid level leading to potential Quench Tower Pump cavitation Plant: Plant outage	• FIC-070 Quench Tower low spray water alarm. • TIR-072 high offgas temperature alarm	Operator response to alarms should correct in time to avoid a plant outage.	

6288

Drawing No.:94X-5900-N-00274

Table B.5 VITPP Failure Mode and Effects Analysis (FMEA) Worksheet
Waste Water System

1. Item & Function	2. Failure Mode	3. Failure Cause	4. Local/Plant Effect	5. Method of Detection	6. Safeguard	7. Action Recommended
	2. Fails open	valve malfunction	Local: Higher than normal pressure to Quench Tower and Waste Water Filter. The Waste Water Filter is protected by PSV-030/031 Plant: No plant damage	Local PI-093	Waste Water Filter PSV- 030/031	
	3. Manual valve V-330 inadvertently open	Operator error	Same as above	Same as above	Same as above	
5. V-327 - Manual Valve to Spare Storage Tank Function: Transfer water to the Spare Storage Tank.	1. Inadvertently open	Operator error	No significant consequences; recycle water transferred to spare storage tank	• LSL-560 on Spare Storage Tank • LALL-100 on Recycle Water Tank	Operator response	Add level indication to Spare Storage Tank
6. V-326 - Manual Valve to Thickener Outlet Function: Provide Thickener flushing capability	1. Inadvertently open	Operator error	No significant consequences; FV-026 must also be open to allow flush operation.			
7. FCV-030 - Waste Water Flow Control Valve Function: Provide a controlled means to periodically allow water to be evacuated from the system through the Waste Water Filter	1. Fails Open prematurely or during operation.	1. Valve malfunction 2. Operator error	Local: Potential loss of recycle water inventory causing loss of Quench Tower spray water and offgas heating. Plant: Potential Plant outage if operators do not respond in time	• LIR-100 and LALL-100 low Recycle Water Tank alarms	Operator response to alarms should correct in time to avoid a plant outage.	
	2. Fails closed	1. Loss of instrument air 2. Valve malfunction 3. Operator error	No significant consequences; delay in water evacuation until valve is repaired.			
8. V-311, V-345, V-357, V-347, V-375 Waster Water Filter outlet manual valves	1. Closed	1. Operator error	Local: Potential overpressure of Waste Water Filter causing an enclosure rupture. Plant: Potential plant outage; backup Waste Water Filter provided.	PAH-031 high pressure alarm	PSV-030/031 protects Waste Water Filter enclosure	
9. V-306/307 Manual block valves; filters to the Thickener	1. Open	1. Operator error	Local: Water flow to Thickener resulting in no significant consequences. Plant: Plant outage	• FQR-030 Waste Water Filter outlet totalizer alarm • LIR-100 and LALL-100 low Recycle Water Tank alarms	Operating procedures to check valve alignment prior to start of operation.	

000083

628

Drawing No.:94X-5900-N-00274

Table B.5 VITPP Failure Mode and Effects Analysis (FMEA) Worksheet
Waste Water System

1. Item & Function	2. Failure Mode	3. Failure Cause	4. Local/Plant Effect	5. Method of Detection	6. Safeguard	7. Action Recommended
10 5-FL-03 A/B Waste Water Filter	1 Excessive solids in filtrate system	1. Operator fails to back flush when required.	Local: Potential for poorly filtered water transfer to the Building Sump Plant: Poor quality water output from plant	PDIR-030/031 high differential pressure alarm.	Operating procedures to flush upon a high differential pressure and switch to standby filter	
11 FCV-038 Waste Water Filter flush Valve Function: Provide a controlled method to flush the Waste Water Filter to the Thickener	1. Fails open	1. Valve malfunction 2. Operator error	Local: No significant consequences. Overpressure cannot occur unless the downstream valve is closed. Plant: None			
	2. Fails closed or operator fails to perform function	1. Valve malfunction 2. Operator forgets to perform cleaning operation	Local: Potential for poorly filtered water transfer to the Building Sump Plant: Poor quality water output from plant.	PDIR-030/031 high differential pressure alarm.	Operating procedures to flush upon a high differential pressure.	
12. FV-104 Recycle Water Tank "Fill" Valve Function: Provide a method to replenish the recycle water supply. Note: Per the control logic dwgs. N274 (10/25/95) a high Recycle Water Tank Level (LT-100) prevents the opening of this valve.	1. Fails open	1. Valve malfunction	Local: Potential overflow of Recycle Water Tank causing water to flow through the vent line to the offgas line Plant: Water fills offgas line downstream of scrubber and blocks offgas flow. Plant outage	LIR-100 Recycle Waste Tank high level alarm	LAHH-100 prevents opening the valve if the Recycle Waste Tank level is high.	
	2. Fail closed or operator fails to open when required	1. Valve malfunction 2. Operator error	Local: Potential loss of recycle water inventory causing loss of Quench Tower spray water and offgas heating. Plant: Potential Plant outage if operators do not respond in time	• LIR-100 and LALL-100 low Recycle Water Tank alarms	Operator response to alarms should correct in time to avoid a plant outage.	

000034

628

Drawing No.:94X-5900-N-00274

Table B.5 VITPP Failure Mode and Effects Analysis (FMEA) Worksheet
Waste Water System

1. Item & Function	2. Failure Mode	3. Failure Cause	4. Local/Plant Effect	5. Method of Detection	6. Safeguard	7. Action Recommended
13. V-340 Recycle Tank Vent Damper	1. Closed	Operator error	Local: Inability to vent to offgas line; however, an implosion is protected by vacuum breaker PSV-100. Plant: No equipment damage	None	Vacuum Breaker PSV-100.	Consider adding a local pressure indicator on the Recycle Water Tank to indicate a closed/blocked vent valve condition (this is a generic comment for all tank venting. A study of all tank vent routing and valving to be performed prior to VITPP Phase 2).
14 V-373/V-372 Sparge Tank Isolation valves Function: Provide isolation capability The line to the Sparge Tank is not installed in Phase 1 and is not considered in the FMEA						
15. 5-PM-50A/B Building Sump Pumps Function: Provide capability to transfer Building Sump Tank contents to the High Nitrate Tank	1. No flow/ Pressure	Pump malfunction	No significant consequences; Redundant pump			

0000085

62 3

Drawing No.:94X-5900-N-00805

Table B.6 VITPP Failure Mode and Effects Analysis (FMEA) Worksheet
Radon Removal System

1. Item & Function	2. Failure Mode	3. Failure Cause	4. Local/Plant Effect	5. Method of Detection	6. Safeguard	7. Action Recommended
Function: collects the net excess water from the VITPP for radon removal prior to discharging the water to the High Nitrate Tank and ultimately to the AWWT						
1. 5-PM-42 Sparge Pump Function: pumps the sparger water from the Sparger Tank to the building sump	1. No flow/ pressure	1. Motor/pump failure	Inability to discharge netaccumulation of water from plant	PI-428, LSL-500	• Use excess capacity in Sparge Tank, Recycle Tank, Spare Tank. • Bypass Sparge Tank and divert water to building sump.	
		2. Power loss/outage	Water flow into the tank stops: no consequence.	PI-428, numerous plant alarms	None	Consider adding to standby power for plant restart during extended outage.
2. Electrical Heaters	Loss of tank heating	1. Element failure	Radon stripping efficiency decreases	TI-398 XS-390 A/B	• Second heating element and air stripping provide service while element is repaired/replaced • Excess tank capacity can hold water until element is replaced	
		2. Power loss/outage	Water flow to tank stops: no consequence.	TI-398, numerous plant alarms	None	Consider adding to standby power for plant restart during extended outage.
3. FY-391; Solenoid valve Function: admits sparge air to Radon Sparge Tank	No air flow	1. Valve Malfunction	Water leaving plant is high in radon content	FI-398	None	Consider adding manual bypass
		2. Power loss/outage	Water flow to tank stops: no consequence	Numerous plant alarms	None	Ensure valve fails open on power failure to allow plant to restart on standby power

000086

628

Table B.7 VITPP Failure Mode and Effects Analysis (FMEA) Worksheet

Drawing No.:94X-5900-N-00273/00272 (Film Cooler) **Off-Gas Treatment System**

1. Item & Function	2. Failure Mode	3. Failure Cause	4. Local/Plant Effect	5. Method of Detection	6. Safeguard	7. Action Recommended
Off-Gas Treatment System Function: Provide off-gas cooling to saturation temperature (approx 115 F) in the Quench Tower and removal of particulate in the Scrubber						
1 Film Cooler Function: Cool Melter off-gas below 600 F to be compatible with downstream equipment temperature specifications	1. Loss of compressed air supply	• Air Compressor failure (Dwg 1006) • PCV-422 fails closed (Dwg 275) • Power loss • Operator error	Local: The section of pipe immediately downstram of the melter will exceed its design temperature; however, operators should be able to take appropriate action to protect the line. (Place Melter on idle, restore film cooler air. Plant: Potential loss of piping integrity	PISL-441 (Dwg 275); No control room alarm shown TIR-071 high off-gas temperature alarm	• Bypass around PCV-422 although the operator may not be able to open the bypass in sufficient time to avoid damage to downstream piping • Automatic switch on high pressure, or operators manually switch to the Emergency Off-gas system	• Determine if the operator can open PCV-422 bypass in sufficient time to avoid damage to downstream piping. • For a power loss case, consider putting the air compressor on standby power system with a solenoid valve to shutoff instrument air flow to the film cooler after melter vents to the EOS.
2. Quench Tower Function: Decrease off-gas temperature to 115 F; Redundant Quench Tower Pumps provided with auto start capability per control logic Dwg N272 Sht 3 (10/25/95); Low Quench Tower Level does not shut off Quench Tower Pump.						
2.a FCV-070 - Quench Tower Inlet Water Valve Function: Regulate recycle water flow to maintain approximately 40 gpm per a manual set point.	1. Fail Closed (low flow)	• False high flow signal from FY-070, FIC-070 or magnetic flow device (FIT-070) • Valve malfunction	Local: • High off-gas temperature causing a high Scrubber liquid temperature and evaporation rate and a corresponding low Scrubber liquid level leading to potential Scrubber Recirculation Pump cavitation. • Scrubber liquid temperature promotes pump cavitation, although other equipment should tolerated the elevated temperature. Plant: Melter Idle condition; Plant outage	• TIR-072 provides an independent means of detection a high off-gas temperature. • LIR-221 low level alarm and LSHH-220 indicates that the scrubber liquid level is low • FIC-070 low flow alarm	Operator action to idle Melter.	Consider adding a bypass on FCV-070.
	2. Fail open (high flow)	• False low flow signal from FT-070, FIC-070 or FIT-070 • Loss of instr air • Valve malfunction	Local: Potential high liquid level in Quench Tower causing potential blockage of off-gas if the situation is not corrected. Plant: Plant outage	• LIC-070 high level alarm and LSHH-070 high high level switch alarm	Operator action to decrease liquid flow rate. LCV-070 opens in response to high level.	Consider adding a high flow alarm on FIC-070.

000087

628

Table B.7 VITPP Failure Mode and Effects Analysis (FMEA) Worksheet

Drawing No.:94X-5900-N-00273/00272 (Film Cooler) **Off-Gas Treatment System**

1. Item & Function	2. Failure Mode	3. Failure Cause	4. Local/Plant Effect	5. Method of Detection	6. Safeguard	7. Action Recommended
2.b 5-PM-23A; Quench Tower Pump Function: Provide transfer capability of liquid from the Quench Tower thru Heat Exchanger 5-HE-27 to the Thickener. The pumps are on the Emergency Standby power supply.	1. No flow/ pressure	1. Motor or pump failure	No significant consequences; Redundant pump with auto start capability provided.	LIC-070 and LAHH-070	**Redundant pump with auto-start**	
		2. Power Loss	No significant consequences. Quench Tower Pumps are on the Emergency Standby power. Quench Tower will not experience a high liquid level in that the quench water supplied by the Recycle Water Pump will stop on loss of power. Melter is placed in idle mode and emergency off gas system activated until Standby power is achieved.	Numerous plant alarms	Quench Tower Pumps are on Standby power.	
2.c LCV-070; Quench Tower Outlet Control Valve Function: Maintain proper Quench Tower liquid level	1. Fail Closed (low flow)	• False high liquid level signal from LT-070, LIC-070 • Valve malfunction	Local: High Quench Tower liquid level leading to stoppage of off-gas flow. High melter pressure requiring off-gas diversion to the EOS Plant: Plant outage and Potential operator/offsite contamination	• Independent detection provided by LALL-070 • LIC-070 high level alarm	Emergency Off-gas System	Consider adding block and bypass on LCV-070
	2. Fail open (high flow)	• False low flow signal from FT-070, FIC-070 or FIT-070 • Loss of instr air • Valve malfunction	Local: Loss of Quench Tower liquid level causing pump cavitation. Plant: Potential plant outage	Independent detection provided by LAHL-070	Operator action to shut-off Quench Tower Pump	To better protect the Quench Tower Pumps from cavitation, consider adding an interlock to shutoff the Pumps on a low Quench Tower Liquid level. (LSLL-070)
2.d. 5-PM-60 Caustic Metering Pump Function: Positive displacement pump provides method to introduce caustic to Quench Tower & Scrubber for proper pH adjustment	1. No flow/ pressure	1. Motor or pump failure	Local: Decreased pH in the Quench Tower and Scrubber systems leading to off-gas equipment/pipe as well as liquid handling systems corrosion . A small leak could develop. Plant: Potential outage	• ZS-600 • Routine inspection of 5-PM-60 by operators	Repair Caustic Pump and evaluate system for corrosion impact.	

000088

628

Table B.7 VITPP Failure Mode and Effects Analysis (FMEA) Worksheet

Drawing No.:94X-5900-N-00273/00272 (Film Cooler) **Off-Gas Treatment System**

1. Item & Function	2. Failure Mode	3. Failure Cause	4. Local/Plant Effect	5. Method of Detection	6. Safeguard	7. Action Recommended
	2. Pump on too long	Operator error	High pH promotes particulate formation and solids plugging in the Scrubber Bed. The resulting increases in off-gas friction losses may cause a rise in the melter operating pressure. Plant: Potential outage	Sampling of quench tower bottoms and scrubber liquids (ZQR-600).	None	
3. 5-SB-07/22 Scrubber Package Function: Remove particulate from the off-gas; Per control logic Dwgs N273 Sht 2 (10/25/95) Scrubber pumps have auto-start capability and are not shutdown on a low Scrubber liquid level						
3.a Scrubber Pump 1&2 Function: Provide liquid recirculation capability to the venturi and scrubber column. The Scrubber pumps are on the Emergency Backup power supply and are equipped with auto-start capability.	1. No flow/ pressure	1. Motor or pump failure	No significant consequences; Redundant pump with auto start capability provided.	Rotameter in water line to scrubber, ZS-221.	Redundant pump with auto start capability provided.	
		2. Power loss	Local: No significant consequences Melter is placed in idle mode and emergency off gas system activated for 10 minutes until the Emergency Backup power supply is activated			
3b. Manual Purge Valve V-267 Function: Provide method to periodically evacuate the scrubber contents.	Valve open	Operator error	Local: Loss of Scrubber liquid causing Scrubber Recirculating Pump cavitation Plant; Potential outage	LIR-221 and LALL-220 low level alarms	Operating procedures to maintain purge valve closed.	
3c. Manual Fill Valve V-260 Function: Provide method to periodically fill the scrubber.	Valve open	Operator error	Local High Scrubber liquid level causing increase in off-gas pressure losses and possible rise in melter operating pressure Plant: Potential outage	LIR-221 and LAHH-220 high level alarms	Operating procedures to maintain fill valve closed.	
4 5-DH-21 Desiccant Tower Function: Remote moisture from the off-gas stream to prevent carbon bed filter degradation; Recovered liquid is sent to Building Sump Tank. FCV-1236 is normal open to allow free draining to the Condensate tank. The Condensate Tank is normally vented to the desiccant Tower Per Van Air Pneumatic Schematic Dwg SD-13001. On a high liquid level (LLS-002), FCV-1236 is closed, the pump turned on ,the Condensate Pump discharge valve (FCV-1237) is opened and Condensate Tank is vented to atmosphere.						

000089

62

Table B.7 VITPP Failure Mode and Effects Analysis (FMEA) Worksheet

Drawing No.:94X-5900-N-00273/00272 (Film Cooler) Off-Gas Treatment System

1. Item & Function	2. Failure Mode	3. Failure Cause	4. Local/Plant Effect	5. Method of Detection	6. Safeguard	7. Action Recommended
4.a 5-PM-21; Condensate Pump Function: Provide motive force to transfer condensate to the Building Sump Tank	1. No flow/ pressure	1. Motor or pump failure	Local: High liquid level in Desiccant Tower causing liquid carryover to carbon beds (causing bed degradation) also if the condition is sustained for a long duration condensation could form on the HEPA leading to media breakthrough Plant: Potential contamination release	• LAHH-210(collection tank) high liquid level alarm • LAHH-211(Desiccant Tower • Moisture analyzer MI-210	Operator response	
		2. LLS-002 fails low	Same as above	Same as above	Operator response	
	2. Remain on too long	1. LLS-001 fails high	Local: Pump does not shutoff and tank eventually runs dry leading to possible pump damage Plant: None			
4b. FCV-1236; Condensate Pump inlet isolation valve Function: Close to isolate pump from desiccant Tower during pumping operations and reopen subsequent to pumping Note: Instrument air is required to both open and close the valve per Van Air Dwg SD-13001.	1. Fail to open on demand	1. Loss of instrument air 2. Valve malfunction	Same as item 4.a.1 above	• LAHH-211(Desiccant Tower	Operator response	
	2. Fail to close on demand	1. Loss of instrument air 2. Valve malfunction	Local: • Inability to pump; Inlet valve must be closed as a permissive to continue with the pumping operation. • High liquid level in Desiccant Tower causing liquid carryover to carbon beds also potential for condensation on the HEPA leading to media breakthrough Plant: Potential contamination release.	• LAHH-210(collection tank) high liquid level alarm • LAHH-211(Desiccant Tower • Moisture analyzer MI-210	• Inlet valve must be closed as a permissive to continue with the pumping operation. • Operator response	

000090

628

Table B.7 VITPP Failure Mode and Effects Analysis (FMEA) Worksheet

Drawing No.:94X-5900-N-00273/00272 (Film Cooler) **Off-Gas Treatment System**

1. Item & Function	2. Failure Mode	3. Failure Cause	4. Local/Plant Effect	5. Method of Detection	6. Safeguard	7. Action Recommended
4c. FCV-1237; Condensate Pump discharge isolation valve Function: Open to allow liquid flow to Building sump tank; Close subsequent to pumping operation.. Note: Instrument air is required to both open and close the valve per Van Air Dwg SD-13001.	1. Fail to open on demand	1. Loss of instrument air 2. Valve malfunction	Local: Pump is turned on prior to opening the discharge valve. Potential pump overheat and seal rupture. Condensate release on condensate and air in leakage. The air in leakage elevates the Melter pressure and potentially activates the Emergency Off-gas System. Plant: Plant outage	None It cannot be determined if a local Van Air alarm is provided or if an overall Van Air Trouble alarm is transmitted to the control room.	Emergency Off-gas System	Item on hold
	2. Fail to close on demand	1. Loss of instrument air 2. Valve malfunction	No significant consequences; Backflow from the Building Sump Tank is not expected.			
4d. Condensate Pump/Tank solenoid vent valve. Function: Connect Condensate Tank to Desiccant Tower during normal operation and change state to connect Condensate Tank to atmosphere during pumping Note: Instrument air is required to both open and close the valve per Van Air Dwg SD-13001.	1. Fail to connect to atmosphere during pumping	1. Loss of instrument air 2. Valve malfunction	Local: The decreased pressure in the Condensate Tank increases the liquid level such that it may not fall below LLS-001 to shut off the pump. The continuously running pump may be prone to cavitation. A leak could allow air to enter the Off-gas system. The air in leakage elevates the Melter pressure and potentially activates the Emergency Off-gas System. Plant: Plant outage	None	Emergency Off-gas System	Item on hold
	2. Fail to connect to tank non-pumping operation	1. Loss of instrument air 2. Valve malfunction	Local: a) Negative Condensate Tank pressure allows air to enter the off-gas system resulting in elevated Melter pressure which potentially activates the Emergency Off-gas System a) If liquid fills the line preventing air ingress to the off-gas system, there is a potential for a lower than normal liquid level such that LLS-002 does not activate the pump leading to liquid collection in the Desiccant Tower. Plant: Plant outage	• LAHH-211(Desiccant Tower alerts if liquid collects in the Desiccant Tower	None	Item on hold

000091

62

Drawing No.:94X-5900-N-00315

Table B.8 VITPP Failure Mode and Effects Analysis (FMEA) Worksheet
Off-Gas Air System

1. Item & Function	2. Failure Mode	3. Failure Cause	4. Local/Plant Effect	5. Method of Detection	6. Safeguard	7. Action Recommended
Off-Gas Air System Function: Provide method for removal of radon thru carbon bed adsorption and particulate collection via the HEPA filters.						
1. 5-RN-19A/B; Carbon Bed Filters & Damper System Function: Remove Radon thru adsorption on carbon media thru use of two 100% capacity filters. Isolation capability provided by dampers						
1.a FV-190/192 A & B Carbon Bed Inlet/Outlet dampers Function: Motor operated damper to provide isolation capability. The damper fails in place upon loss of electrical power.	1. Inlet Fail Closed	• Valve malfunction • Operator error	Local: High negative carbon bed & HEPA filter pressure causing a potential Carbon Bed or HEPA filter housing implosion rupture; Also, causes the melter to vent to the EOS. Plant: Potential contamination release. Melter idled	FI-250 low flow alarm. High pressure in Melter	High Melter pressure activates the Melter Emergency Exhaust System	Check Carbon Bed enclosure negative pressure rating to determine if it can survive potential increase in negative pressure when new exhausters are installed (assuming 2 exhausters).
	2. Inlet Premature Fail Open	• Operator error • Valve malfunction	Local: No significant consequences Plant: N/A	PDI-190/191		
	3. Both Inlet & Outlet fail Closed	• Valve malfunction • Operator error • HS-191/192 malfunction	Local: Loss of Melter off-gas flow; Plant: Off-gas diverted to EOS. Melter idled	FI-250 low flow alarm. High pressure in Melter	High Melter pressure activates the Melter Emergency Exhaust System	
	4. Both Inlet & Outlet fail Open	• Valve malfunction • Operator error • HS-191/192 malfunction	Local: No significant consequences Plant: N/A			
1b. Carbon Bed Filter Function: Remove Radon thru adsorption on carbon media thru use of two 100% capacity filters	1. Inability to remove radon	Depleted carbon bed due to operator failing to change to parallel carbon bed	Local: Inability to remove radon Plant: Potential radon release to the environment.	• FIQR-252 high radioactivity alarm • AIR-191 indicator and alarm	• Select alternate Carbon Bed	

000092

628

Drawing No.:94X-5900-N-00315

Table B.8 VITPP Failure Mode and Effects Analysis (FMEA) Worksheet
Off-Gas Air System

1. Item & Function	2. Failure Mode	3. Failure Cause	4. Local/Plant Effect	5. Method of Detection	6. Safeguard	7. Action Recommended
	2. Carbon oxidation with Nox	1. High Nox	Local: Potential fire Plant: Potential contamination release	None	None	• Add a temperature and CO/CO2 detector alarms at the Carbon Bed discharge to detect Carbon Bed oxidation. • Consider adding a fire suppression system.
2. 5-FL-48 A/B; HEPA filters and isolation damper system Function: Provide high efficiency particulate collection capability. Two 100% filters provided						
2.a FV-480/481 HEPA filter isolation valves Function: Manually operated damper to provide isolation capability. A power loss causes the valve to fail in place.	1. Inlet Fail Closed	• Valve malfunction • Operator error	Local:Loss of Melter off-gas flow; Plant: Off-gas diverted to EOS. Melter idled	FI-250 low flow alarm provides an independent flow signal Note: PDI-480 indicates a problem thru a potentially confusing false high differential pressure alarm.	HEPA should tolerate the negative pressure in that it was tested at a -60 " wg. Melter Emergency Exhaust System	
	2. Inlet Premature Fail Open	• Operator error • Valve malfunction	Local: Initial low Melter pressure is compensated by automatic closing of the fan inlet Plant: No significant consequences	• PDT-480 A/B • transient high flow signal from FI-250 high flow alarm provides an independent signal.	Automatic closure of the fan inlet	
	3. Both Inlet & Outlet fail Closed	• Valve malfunction • Operator error • HS-191/192 malfunction	Local: Loss of off-gas flow Plant: Melter in idle mode; Plant outage	FI-250 low flow alarm. High pressure in Melter	High Melter pressure activates the Melter Emergency Exhaust System	
	4. Both Inlet & Outlet fail Open	• Valve malfunction • Operator error • HS-191/192 malfunction	Local: No significant consequences			

000093

Drawing No.:94X-5900-N-00315

Table B.8 VITPP Failure Mode and Effects Analysis (FMEA) Worksheet
Off-Gas Air System

1. Item & Function	2. Failure Mode	3. Failure Cause	4. Local/Plant Effect	5. Method of Detection	6. Safeguard	7. Action Recommended
2.b Manual valve V-557. Installed to bypass carbon beds during Phase 1 operations.	1. Open	1. Operator error	Local: Bypass Carbon Filter - resulting in inability to collect radon. Plant: Potential particulate release.	• PDIT-190 - low differential pressure alarm detects the open bypass condition; however, because the bypass is connected to the main line downstream of AIR-191, a potential radon release cannot be detected.	Operating procedures to properly align valves after maintenance	Provide administrative control features to control use of this valve after Phase 1.
2.c HEPA filter Function: Provide high efficiency particulate collection capability	1. Filter media break through	• Improper alignment of differential pressure manual valves (V-0G 1261 thru 1264) prevents high differential pressure detection. • PDIT-480 failure prevents high differential pressure detection. • Operator fails to switch to the standby HEPA filter upon detection of a high differential pressure.	Local: Increase in off-gas flow compensated by Exhaust Fan inlet damper (FCV-250) controls. Plant: Operator manually places Melter in idle;	• Initially a FI-250 high flow alarm will activate until FCV-250 damper automatically closes to compensate for the increased flow • Low differential pressure detected by PDIT-480 • Monitoring of plant stack by RIDR-252 high alarm	Monitor HEPA and replace elements as required	
3. 5-FA-25 Exhaust Fan and associated inlet control valve FCV-250; Function: Maintain off-gas system negative pressure and provide motive force to convey Melter off-gas; Exhaust Fan can provide a maximum of -40 to -45 "wg differential pressure.						
3.a FCV-250 (converted to a PV); Exhaust Fan inlet Control Valve Function: Regulate flow to maintain the Melter pressure negative with respect to room pressure via PDIC-250 controller.	1. Fail Closed (low flow)	• False low Melter pressure signal from PDT-250, or PDIC-250 (Dwg 272) • Valve malfunction	Local: Loss of melter off-gas system Plant: Shutdown	FI-250 low flow alarm	Melter Emergency Exhaust System	
	2. Fail open (high flow)	• False high Melter pressure signal from PDT-250, or PDIC-250 (Dwg 272) • Loss of instrument air	Local: No significant consequences	FI-250 high flow alarm		

000094

62

Drawing No.:94X-5900-N-00315

Table B.8 VITPP Failure Mode and Effects Analysis (FMEA) Worksheet
Off-Gas Air System

1. Item & Function	2. Failure Mode	3. Failure Cause	4. Local/Plant Effect	5. Method of Detection	6. Safeguard	7. Action Recommended
3.b 5-FA-25; Exhaust Fan Function: Maintain off-gas system negative pressure and provide motive force to convey Melter off-gas	1. Fail Off	• Motor or fan failure • Power failure	Local: Loss of ability to remove Melter off-gas, melter vents to EOS Plant: Melter idle	FI-250 low flow alarm provides an independent flow signal. Numerous plant alarms.	Melter Emergency Exhaust System	Add a spare exhaust fan. 5-FA-25 is on standby power. The EOS is on UPS for Phase 2.

000095

628

Drawing No.:94X-5900-N-00820

Table B.9 VITPP Failure Mode and Effects Analysis (FMEA) Worksheet
Emergency Off-Gas System

1. Item & Function	2. Failure Mode	3. Failure Cause	4. Local/Plant Effect	5. Method of Detection	6. Safeguard	7. Action Recommended
Emergency Off-Gas System Function: Provide backup HEPA filter protection in the event that the primary system fail as well as Melter relief protection. Note: The Exhaust Fan is continuously running with inlet valve FV-370 closed. Per the control logic drawings (N820, sht 1), if PDAH-171 or PDAH-250 detect a high Melter pressure or if rupture disk sensor (OS-350) senses a high positive Melter pressure both FV-370 and inlet air valve FV-360 open. The inlet air valve is required to cool the Melter off-gas. Informal calculations indicate significant off-gas cooling within a short distance of the Melter. Assuming the inlet air valve (FV-360) does not open on demand, the temperature is expected to decreases from 1472 F to a level that can be tolerated by downstream equipment within a few; however, formal calculations have not been issued to verify this condition.. The HEPA filter is located approximately 70 ft downstream of the Melter outlet and is specified for a temperature of 500 F and is expected to perform adequately if FV-360 does not open on demand. FERMCO process engineers state that a short section of the off-gas line immediately down stream of the Melter can experience a high temperature if FV-360 does not open; they don't expect structural damage during the approximately 15 minutes it takes to manually open the inlet air valve (FV-360) in the event it does not automatically open. In the event that FV-370 does not open a parallel line equipped with a rupture disk, (OS-350) and a Rupture Sensor/alarm (OS-350/OA-350) is provided. Switch OS-350 initiates the opening of both FV0-370 and FV-360. It should be noted that the rupture disk opens when the Melter is under a positive pressure. Therefore a short term radon release in the area surrounding the Melter occurs until the Exhaust Fan achieves a negative Melter pressure. PSV-360 is provided to protect the Melter against an overpressure rupture in the event that the Exhaust Fan fails. Because PSV-360 is activated when the Melter is at a positive pressure, a radon release occurs under this condition.						
1. FV-370/360 and associate control loop (PDAH-171 or PDAH-250) Function: Primary high Melter pressure mitigation system. High Melter pressure (- 0.5 " wg) opens FV-370 and FV-360. Note: The failure to detect high pressure is not considered because two high pressure detection devices are provided.	1. Fails to activate on demand	1. Inlet manual valve V-OG-1288 inadvertently closed after testing or maintenance operation	Local: Inability to open FV-370 on demand. Melter experiences a positive pressure and rupture disk OS-350/IPV-360 open to bypass FV-370. The rupture condition is detected by OA-350 which activates FV-370 & FV-360. The Exhaust Fan quickly reduces the Melter pressure to a negative level. Plant: The positive Melter pressure allows a short term release of radon and other contaminates in the vicinity of the Melter.	• PDIT-250 (dwg 272) high differential pressure alarm in control room • PDAH-171 (dwg 272) high differential pressure alarm in Duratek Melter control panel • PIR-360	• Valve FV-370 bypass line rupture disk (OS-350) opens to minimize the amount of radon released • PSV-360 provides protection against a high overpressure with the potential to rupture the Melter	Consider administrative procedures to lock valve OG-1288 open and provide a second check of the valve status after each maintenance/ testing operation.

000096

628

Drawing No.:94X-5900-N-00820

Table B.9 VITPP Failure Mode and Effects Analysis (FMEA) Worksheet
Emergency Off-Gas System

1. Item & Function	2. Failure Mode	3. Failure Cause	4. Local/Plant Effect	5. Method of Detection	6. Safeguard	7. Action Recommended
		2. Both PDAH-171 and PDAH-250) fail low because of condensation at a low point in the instrumentation piping dead leg. Note: The piping to the instruments is unheated and mechanical cooling is provided to protect the instruments from the hot Melter off-gas.	Local: Inability to open FV-370 & FV-360 on demand. Melter experiences a positive pressure and rupture disk OS-350 opens to bypass FV-370. The elevated pressure is detected by OS-350 which activates FV-370 & FV-360. The Exhaust Fan quickly reduces the Melter pressure to a negative level. Plant: The positive Melter pressure allows a short term release of radon and other contaminates in the vicinity of the Melter.	• PIR-360	Same as above as	Ensure that the piping is free of any low points that could collect liquid and prevent the activation of PDAH-171 or PDAH-250.
		3. Manual valve OG--104(Dwg-272) is inadvertently closed.	Local: Inability to open FV-370 & FV-360 on demand. Melter experiences a positive pressure and rupture disk OS-350 opens to bypass FV-370. The elevated pressure is detected by OS-350 which activates FV-370 & FV-360. The Exhaust Fan quickly reduces the Melter pressure to a negative level. Plant: The positive Melter pressure allows a short term release of radon and other contaminates in the vicinity of the Melter.	• PIR-360	Same as above as	Consider administrative procedures to lock valve OG-104 open and to provide a second check of the valve status after each maintenance/ testing operation
		4. FV-370 Fails closed due to valve malfunction or SY-370 solenoid valve malfunction	Local: Melter experiences a positive pressure and rupture disk OS-350 opens to bypass FV-370. The Exhaust Fan quickly reduces the Melter to a negative level Plant: The positive Melter pressure allows a short term release of radon and other contaminates in the vicinity of the Melter.	Rupture Sensor overpressure alarm OS-350	Valve FV-370 bypass line rupture disk (OS-350) opens to minimize the amount of radon released	

000097

Drawing No.:94X-5900-N-00820

Table B.9 VITPP Failure Mode and Effects Analysis (FMEA) Worksheet
Emergency Off-Gas System

1. Item & Function	2. Failure Mode	3. Failure Cause	4. Local/Plant Effect	5. Method of Detection	6. Safeguard	7. Action Recommended
		5. FV-360 Fails closed due to valve malfunction or SY-360 solenoid valve malfunction	Local: High temperature off-gas to EOS. A short section of pipe immediately downstream of the Melter experiences a high temperature. Operator should be able to manually open the valve within 15 minutes to avoid structural damage Plant: None	• ZSL-360 valve position indication • High temperature alarm TIR-360 • High pressure alarm PIR-360	Operator manually opens the valve to avoid structural damage	• Perform a formal evaluation to verify that in the event that FV-360 fails to open on demand, the off-gas temperature decreases sufficiently such that downstream equipment fails to perform properly. • Note: Although the P&ID shows an insulated line, field checks shows that the insulation is not present. The P&ID should reflect the actual condition.
2. 5-FA-38; Emergency Off-gas Fan Function: Provide a source of negative Melter pressure	1. Fail Off	1. Motor or fan failure	Local: Loss of off-gas backup capability Plant: Plant outage until fan is repaired	• Fan running status indication in control room	Administrative controls to place Melter in idle until the Exhaust Fan is repaired	
		2. Belt failure	Local: Loss of off-gas backup capability Plant: Plant outage until fan is repaired	None; The control room Exhaust Fan running status indication does not detect this failure.	None	Because a loss of the Exhaust Fan places the Melter at risk, consider adding an device, such as a pressure alarm, to detect an Exhaust Fan belt failure.

000098

Drawing No.:94X-5900-N-00314

Table B.10 VITPP Failure Mode and Effects Analysis (FMEA) Worksheet
Process Cooling Water

1. Item & Function	2. Failure Mode	3. Failure Cause	4. Local/Plant Effect	5. Method of Detection	6. Safeguard	7. Action Recommended
Process Cooling Water Function: Provide method to remove heat from processing cooling water using cooling tower evaporative cooling. Single Cooling Tower Fan and Cooling Tower Pump provided. Primary load is the Quench Tower. Confirm that cooling water no longer flows to Gem Machine						
1. 5-PM-28 Cooling Tower Pump Function: Provide motive force to circulate cooling water through 5-HE-27 Heat Exchanger. The pump is on the emergency electrical supply.	1. No flow/ Pressure	Pump failure	Local: Loss of ability to remove heat from Quench Tower Liquid. Plant: Plant Outage	• PAL-250 Cooling Water low pressure alarm	None	Consider the addition of a second Cooling Tower Pump.
		2. Power loss	Local: Pump is on the Emergency generator power supply. A Power loss places Melter on idle which reduces the cooling water heat requirements. Plant: No significant equipment damage.	• ZS-261 fan running status indication	None	
2. 5-CT-26; Cooling Tower Fan Function: Provide air flow counter current to falling water promote cooling	1. No air Flow	1. Fan or motor failure	Local: Loss of forced air flow; however, natural draft maintains temperature within limits for undefined time duration Plant: Plant outage after if the fan is not repaired.	• TSH-261 cooling water high temperature alarm • ZS-261 fan running status indication	Natural draft provides a period of time to regain operation before production is impacted	
		2. Power loss	Local: Loss of forced air flow; power loss places Melter on idle which reduces the cooling water heat requirements. Plant: No plant equipment damage anticipated	• ZS-261 fan running status indication	None	Consider placing the Cooling Tower Fan on standby power for the Phase 2 effort to support the off-gas sytem which is connected to standby power.
3. 5-HE-27 Heat Exchanger Function: Remove heat from the Quench Tower liquid.	1. Tube leak	Corrosion, bad weld	Local: • Qunech liquid flows into cooling water an undetected release of acid gas and radon occurs at the Cooling Tower. • Cooling water flows into Scrubbing liquid causing Recycle Water Tank level to increase. Plant: Radon release if Quench Tower water pressure is higher than cooling water pressure	• None if Quench Tower water pressure is higher than cooling water pressure. • LAHH-100 and LIR-100 Recycle water tank high level alarm if Cooling water pressure is higher than Quench Tower water pressure.	Heat exchanger inspections during plant turnarounds. Maintain proper water quality.	Ensure that cooling water pressure is always maintained above Quench Tower water pressure

000099

628

Drawing No.:94X-5900-N-00314

Table B.10 VITPP Failure Mode and Effects Analysis (FMEA) Worksheet
Process Cooling Water

1. Item & Function	2. Failure Mode	3. Failure Cause	4. Local/Plant Effect	5. Method of Detection	6. Safeguard	7. Action Recommended
	2. Shell leak	Corrosion, bad weld	Local: Minor leak of cooling water to the outside is anticipated. Plant: Place Melter on idle and repair leak.	• TIR-273 high Quench water liquid temperature alarm. • Observation of leak	Heat exchanger inspections during plant turnarounds. Maintain proper water quality.	

000100

62