Department of Energy

Ohio Field Office
Fernald Area Office
P. O. Box 538705
Cincinnati, Ohio 45253-8705
(513) 648-3155

MAY 22 1997

DOE-0975-97

Mr. James A. Saric, Remedial Project Director
U.S. Environmental Protection Agency
Region V-SRF-5J
77 West Jackson Boulevard
Chicago, Illinois 60604-3590

Mr. Tom Schneider, Project Manager
Ohio Environmental Protection Agency
401 East 5th Street
Dayton, Ohio 45402-2911

Dear Mr. Saric and Mr. Schneider:

TRANSMITTAL OF GEOTECHNICAL SAMPLING AND TESTING PLAN OF THE FORMER PLANT AREA

Enclosed for your information is a copy of the Geotechnical Sampling and Testing Plan of the Former Plant Area. The purpose of this investigation is to obtain additional geotechnical data to support the future Integrated Remedial Design Packages of the Fernald Environmental Management Project's (FEMP) Former Plant Area (former Production Area and Administration Area).

If you should have any questions, please contact Robert Janke at (513) 648-3124.

Sincerely,

Johnny W. Reising
Fernald Remedial Action
Project Manager

FEMP:R.J. Janke

Enclosure: As Stated

Recycled and Recyclable

cc w/enc:

N. Hallein, EM-42/CLOV
G. Jablonowski, USEPA-V, 5HRE-8J
R. Beaumier, TPSS/DERR, OEPA-Columbus
M. Rochotte, OEPA-Columbus
T. Schneider, OEPA-Dayton (total of 3 copies of enc.)
F. Bell, ATSDR
D. S. Ward, GeoTrans
R. Vandegrift, ODOH
R. Geiger, PRC
AR Coordinator/78

cc w/o enc:

D. Carr, FDF/9
T. Hagen, FDF/65-2
J. Harmon, FDF/90
A. Hunt, FDF/52-5
C. Little, FDF/2
EDC, FDF/52-7

bcc w/o enc:

R. J. Janke, DOE-FEMP

FERNALD ENVIRONMENTAL MANAGEMENT PROJECT
FERNALD, OHIO

GEOTECHNICAL SAMPLING AND TESTING PLAN OF THE FORMER PLANT AREA

APRIL 1997

U.S. DEPARTMENT OF ENERGY
FERNALD AREA OFFICE

20200-SP0001
REV. 0

756

FERNALD ENVIRONMENTAL MANAGEMENT PROJECT
FERNALD, OHIO

GEOTECHNICAL SAMPLING AND TESTING PLAN OF THE FORMER PLANT AREA

APRIL 1997

U.S. DEPARTMENT OF ENERGY
FERNALD AREA OFFICE

20200-SP0001
REV. 0

5

GEOTECHNICAL SAMPLING AND TESTING PLAN

FOR THE

FORMER PLANT AREA

REVISION 0

APPROVALS:

Arlen Hunt 4-17-97

Arlen Hunt, Program Manager — Date
Soil Characterization & Excavation Project

Greg Jones 4/16/97

Greg Jones, Engineering Manager — Date
Soil Characterization & Excavation Project

Stephen T. Garland 4/17/97

Steve T. Garland, Integration & Reviews Manager — Date
Soil Characterization & Excavation Project

TABLE OF CONTENTS

1.0 Introduction 1-1
1.1 Objective 1-1
1.2 Background 1-1

2.0 Summary of Previous Geotechnical Investigations and Path Forward 2-1

3.0 Organization and Responsibilities 3-1
3.1 Organization 3-1
3.2 Organizational Responsibilities 3-1
3.3 Responsibility Matrix 3-3
3.4 Sampling Schedule 3-4

4.0 Health and Safety 4-1
4.1 Geotechnical Sampling and Testing Plan 4-1
4.2 Radiological Monitoring and Control 4-2
4.3 Non-radiological Monitoring and Control 4-3

5.0 Quality Assurance and Quality Control 5-1
5.1 Accuracy, Precision, and Sensitivity 5-1
5.1.1 Accuracy and Precision 5-1
5.1.2 Sensitivity 5-2
5.2 Data Completeness and Verification 5-2
5.2.1 Data Completeness 5-2
5.2.2 Data Verification 5-2
5.3 Training 5-2
5.4 Field Data Package Validation 5-2
5.5 Performance and System Audits 5-2
5.6 Changes to the GSTP 5-3
5.6.1 Minor Changes 5-3
5.6.2 Significant Changes 5-4
5.6.3 Programmatic Changes 5-4
5.6.4 SCQ Project Specific Application 5-4
5.7 Non-Conformances 5-5

6.0 Field Activity Guidelines 6-1
6.1 Field Activity Requirements 6-1
6.2 Field Operations Procedures 6-2

7.0 Field Sampling and Testing Plan 7-1
7.1 General 7-1
7.2 Former Plant Area Field Program 7-1
7.2.1 Purpose 7-1
7.2.2 Soil Borings 7-2
7.2.3 Waste Handling/Disposal 7-3
7.2.4 Equipment Monitoring/Decontamination 7-4
7.2.4.1 Radiological Monitoring 7-4
7.2.4.2 Subsurface Sampling Equipment 7-4

7.2.4.3 Controlled Area Investigative Work 7-4
7.2.4.4 Entering a Controlled Area from a Radiological Area 7-5
7.2.4.5 Entering a Non-Controlled Area from a Controlled Area 7-5
7.2.4.6 Entering a Radiological Area from a Controlled Area 7-6
7.2.4.7 Radiological Area/Non-Controlled Area 7-6
7.2.5 PPE Requirements 7-6
7.3 Archive Sample Testing Program for Former Plant Area 7-6
7.3.1 Purpose 7-6
7.3.2 Archive Sample Test Plan 7-6
7.4 Project Surveying 7-7
7.5 General Sampling Requirements 7-7
7.5.1 Field QC Samples 7-7
7.5.2 Sample Equipment and Materials 7-7
7.5.3 Sample Volume, Containers, and Preservation 7-7
7.5.4 Sample Collection Documentation 7-8
7.5.5 Sample Collection Reports 7-8
7.5.6 Data Management 7-8
7.6 Sample Management 7-9
7.6.1 Sample Identification and Labeling 7-9
7.6.2 Sample Chain of Custody Records and Field Data Documentation 7-9
7.7 Field Equipment Methods 7-9
7.7.1 Calibration of Field Equipment 7-9
7.7.2 Documentation of Calibration 7-9
7.8 Laboratory Methods 7-10
7.9 Sample Testing 7-10

Appendix A Sitewide Extent of Excavation Solid Block Modeling
Appendix B Data Quality Objectives
Appendix C Geotechnical Investigation Schedule
Appendix D Project Logs and Forms
Appendix E Unexpected Discovery of Cultural Resources
Appendix F Methodology for Denison Sampling
Appendix G Till Thickness and Geologic Cross Section
Appendix H Methodology for Using Hollow-Stem Auger as a Temporary Casing in Zones of Subsurface Uranium Contamination
Appendix I ASTM Standards
Appendix J Summary of Existing Geotechnical Laboratory Data - Former Plant Area
Appendix K Test Plan for Archived Samples

LIST OF TABLES

Table 1-1 Status of Remedial Design Packages
Table 2-1 Summary of Reports Reviewed for Former Plant Area Geotechnical Data
Table 2-2 Summary of Existing and Proposed Geotechnical Testing Former Plant Area
Table 6-1 Soil Sampling and Testing Reference Guidelines
Table 6-2 Summary of ASTM Procedures
Table 7-1 Geotechnical Laboratory Testing Program for Former Plant Area (Soil Borings)
Table 7-2 Geotechnical Laboratory Testing Program Summary Soil Boring Samples
Table 7-3 Sample Volume, Containers, and Preservation - Soil Samples
Table 7-4 Geotechnical Laboratory Testing Program Archive Samples
Table 7-5 Summary of Geotechnical Testing Former Plant Area Soil Boring and Archived Samples

LIST OF FIGURES

Figure 1-1 Former Plant Area
Figure 1-2 Sitewide Remediation Areas
Figure 1-3 Solid Block Modeling Proposed Remedial Excavation Depth Including Building Foundations - Overview
Figure 1-4 Solid Block Modeling Proposed Remedial Excavation Depth Including Building Foundations (NW Quadrant)
Figure 1-5 Solid Block Modeling Proposed Remedial Excavation Depth Including Building Foundations (NE Quadrant)
Figure 1-6 Solid Block Modeling Proposed Remedial Excavation Depth Including Building Foundations (SW Quadrant)
Figure 1-7 Solid Block Modeling Proposed Remedial Excavation Depth Including Building Foundations (SE Quadrant)
Figure 2-1 GEOVOXEL Modeled Coarse Grained Material Locations (Perspective View)
Figure 2-2 GEOVOXEL Modeled Coarse grained Material Depth (Perspective View)
Figure 2-3 GEOVOXEL Modeled Stratigraphic Cross Sections (Perspective View)
Figure 2-4 GEOVOXEL Modeled Post Excavation Surface (Perspective View)
Figure 2-5 GEOVOXEL Modeled Coarse grained Material Locations (Aerial View)
Figure 2-6 Areal Extent of Coarse-Grained Deposits from GEOVOXEL Model - Former Plant Area
Figure 2-7 Cross-Sections A-A' and B-B' Excavation Sites, Former Plant Area
Figure 2-8 Cross-Sections C-C' and D-D' Excavation Sites, Former Plant Area
Figure 2-9 Excavation Plan Showing GEOVOXEL Cross-Section Locations
Figure 2-10 Existing Boring Location Map Former Plant Area
Figure 2-11 Existing Laboratory Test Data Location Map - Former Plant Area
Figure 2-12 Existing Boring Location Map - Former Plant Area - NE Quadrant
Figure 2-13 Existing Boring Location Map - Former Plant Area - SW Quadrant
Figure 2-14 Existing Boring Location Map - Former Plant Area - SE Quadrant
Figure 2-15 Existing Laboratory Test Data Location Map - Former Plant Area
Figure 3-1 Geotechnical Investigation Organizational Structure
Figure 7-1 Proposed Boring Location Map - Former Plant Area
Figure 7-2 Planned Archive Sample Testing Location Map

Figure A-1 Stratigraphic Model Data Locations
Figure A-2 Sample Locations Not Used in OU5 FS Uranium Model
Figure A-3 Isopach - Base of Excavation (SCEP+Buildings) to Base of Till Production Area
Figure A-4 Depth of Cut and Fill (1952 to 1992)
Figure G-1 Total Till Thickness - Overview
Figure G-2 Total Till Thickness (NW Quadrant)
Figure G-3 Total Till Thickness (NE Quadrant)
Figure G-4 Total Till Thickness (SW Quadrant)
Figure G-5 Total Till Thickness (SE Quadrant)
Figure G-6 SCEP Excavation - Production Area Cross-Sections

LIST OF ACRONYMS AND ABBREVIATIONS

A-E	architect-engineer
ASTM	American Society of Testing and Materials
D&D	decontamination and dismantlement
DOE	US Department of Energy
DQO	data quality objective
EPA	US Environmental Protection Agency
FAL	Field Activity Log
FEMP	Fernald Environmental Management Project
FRL	final remediation level
GIS	geographic information system
GSTP	geotechnical sampling and testing plan
OEPA	State of Ohio Environmental Protection Agency
OSDF	on-site disposal facility
OSHA	Occupational Safety and Health Administration
PPE	personal protective equipment
QA	quality assurance
QC	quality control
SCQ	Sitewide CERCLA Quality Assurance Project Plan
SED	Sitewide Environmental Database
TLD	thermoluminescent dosimeter
WAC	waste acceptance criteria

LIST OF REFERENCES

U.S. Department of Energy, 1994, "Sitewide CERCLA Quality Assurance Project Plan," Rev. 0.2, DOE, Fernald Area Office, Fernald, Ohio.

U.S. Department of Energy, 1995a, "Record of Decision for Final Remedial Actions at Operable Unit 5," Final, DOE, Fernald Area Office, Fernald, Ohio.

U.S. Department of Energy, 1996, "Remedial Design Work Plan for Remedial Actions at Operable Unit 5," DOE, Fernald Area Office, Fernald, Ohio.

Note: See Table 2-1 for additional references.

Section 1

1.0 INTRODUCTION

1.1 OBJECTIVE

The objective of this geotechnical sampling and testing plan is to obtain ten additional subsurface geotechnical data points. The information provided by these ten points will be combined with existing site and geotechnical data in order to support the final remedial design of the Fernald Environmental Management Project's (FEMP's) former plant area (see Figure 1-1). The areas where depths of excavation will be significant are of primary interest.

1.2 BACKGROUND

As stated in the Operable Unit 5 Record of Decision (DOE 1995a), the preferred remedial alternative at the FEMP includes the removal and permanent disposal of contaminated materials to an appropriate on- or off-property disposal facility. The remediation contractor and technical support coordinator for the remediation of the FEMP is Fluor Daniel Fernald (FDF), under contract with the US Department of Energy (DOE). To accommodate this disposition of contaminated materials, an on-site disposal facility (OSDF) is being constructed near the eastern edge of the site. Waste acceptance criteria (WAC) have been developed for certain contaminants that can be disposed in the OSDF. Any contaminated materials (including soils) that exceed the waste acceptance criteria are to be disposed off-site. Contaminated materials meeting the WAC can be disposed in the OSDF.

Final remediation levels (FRLs) have also been developed that establish the minimum concentrations for certain contaminants that require remedial action. Soils exceeding the FRLs are to be excavated and disposed in accordance with WAC.

For purposes of sequencing soil remediation activities, the Remedial Design Work Plan for Remedial Actions at Operable Unit 5 (DOE 1996) divided the FEMP into seven major soil remediation areas and further divided Soil Remediation Areas 1 and 2 into subareas, known as Phases (see Figure 1-2 for approximate boundaries).

The factors influencing the proposed sequencing of soil excavation during remediation of these areas include:

- Remediating upgradient areas first, with respect to surface water and groundwater flow directions, to minimize the potential for recontamination;

- Remediating and certifying soil remediation areas on a priority basis so that surface and subsurface soils should attain the FRLs to support the implementation schedules of other FEMP projects (e.g., excavating and certifying remaining soil in the OSDF footprint prior to construction of the OSDF);

- Implementing reasonable construction practices needed to complete remediation (e.g., stable side slopes for open excavation); and

- Finalizing the remediation of an area subsequent to other associated remediation activities (e.g., decontamination and dismantlement [D&D] of above grade structures are a constraint on the soil excavation).

An enhanced stratigraphic model of the glacial till was developed for the former plant area using solid block modeling techniques (i.e., GEOVOXEL). Geotechnical borings associated with design of plant area facilities were added to the environment boring data base and coarse-grained material (i.e., silty sand through gravel) were identified at 6-inch intervals. A variogram was then developed and the area of interest kriged. To further evaluate heterogenty of the area, contamination data was segregated into a coarse-grained material and fine-grained material subsets and kriged separately. The subsets were then integrated into a comprehensive impacted material model. Results are more mechanistic than that shown in the feasibility study (FS) in that vertical migration dominates in the clay (i.e., fine-grained areas) and lateral migration is observed in the coarse-grained material. Another observation is that in areas without significant sands (i.e., Plant 6 in the southeast portion of the area), the extent of contamination gas expected, seems to be associated with the original excavation limits to build the facility.

Building foundations were then added to the solid block model and the extent of excavation established (again by GEOVOXEL) to envelope impacted material (U total = 20 ppm) and the foundations. Figures 1-3 through 1-7 show the proposed depths of remedial excavations in the former plant area. Section 2.0 further discusses the extent of coarse-grained material, provides the spatial distribution of stratigraphic control used in the solid blocks model, and provides selected cross-sections showing plant area stratigraphy and proposed excavation extent.

To support design, additional geotechnical data is required to evaluate slope stability and dewatering requirements; particularly for excavations penetrating significant zones of coarse-grained materials. A

program has been established to use archived samples, to the maximum extent possible, to evaluate the variability of the permeable zones as well as previously obtained strength data for slope stability. The proposed location and depth for geotechnical borings have been based on an examination of existing geotechnical information within and near the proposed investigative area, and estimated glacial till thicknesses (refer to Appendix G for till thicknesses) and plant area cross sections. The Scope of Work included in this Geotechnical Sampling and Testing Plan (GSTP) is based on the current understanding of site conditions. Drilling and sampling efforts (including archived samples) will be targeted for areas where deeper excavations are proposed. Revisions to the former plant area field and material testing work may be necessary to ensure that the objectives are satisfied as the investigation proceeds. Investigative findings which would significantly effect remedial design (e.g. extensive additional contamination is found) will be discussed with the agencies prior to modification or expansion of the fieldwork associated with this GSTP.

TABLE 1-1
STATUS OF REMEDIAL DESIGN PACKAGES

Deliverable	Submittal Date	Design Status
Area 1/Phase I	July 17, 1996	Completed
Area 1/Phase II	November 21, 1997	In Progress
Area 2/Phase I	March 14, 1997	In Progress
Area 3*	July 2, 1998	Preliminary
Area 4* and Area 5*	November 15, 2000	No Action
Area 6; Area 7; Area 1/Phase III; and Area 2, Phase II	January 15, 2001	No Action

* Included in the Former Plant Area

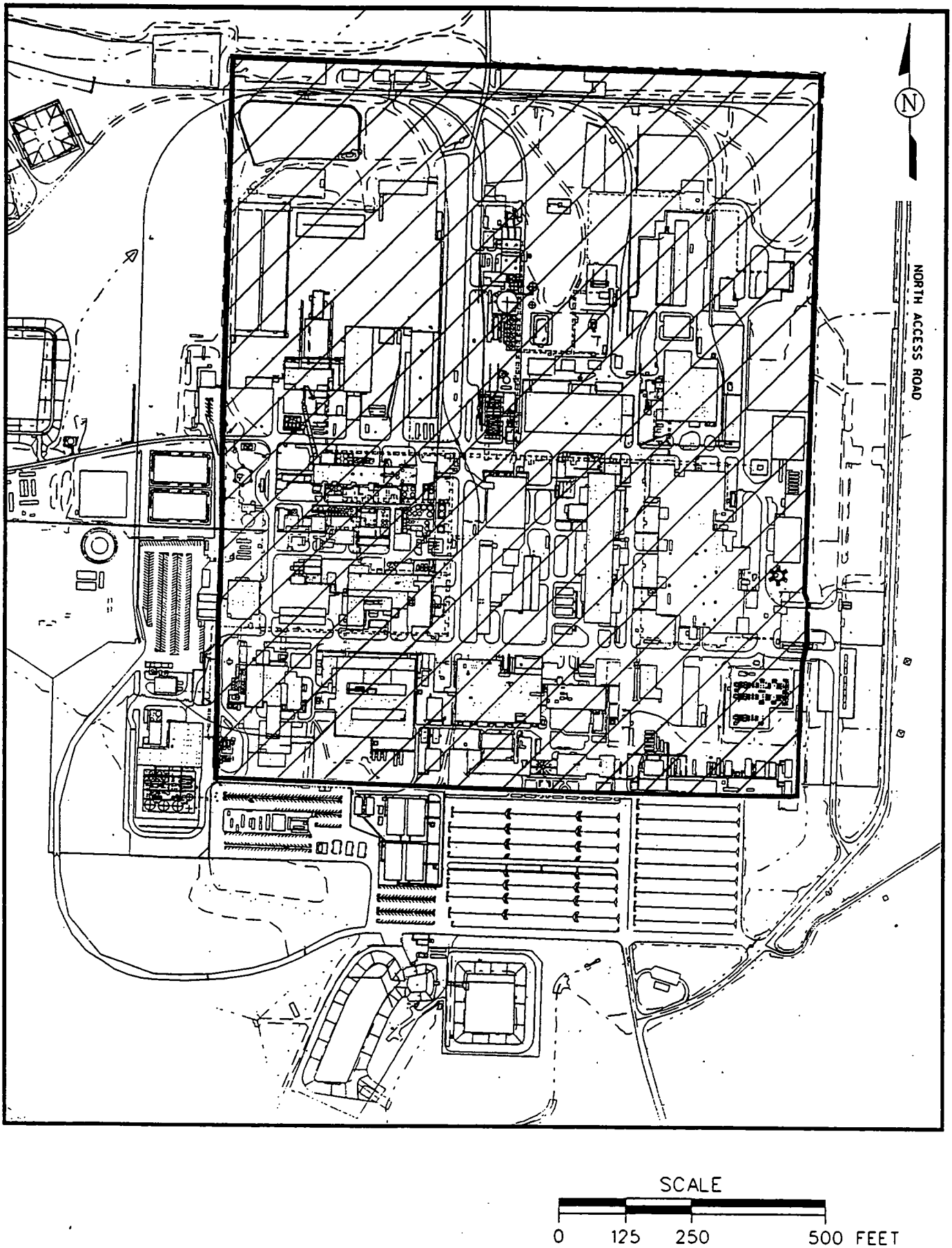

/usr/ermap/dgn/map/hor/dpthy/snider2.dgn deg 1/14/97

FIGURE 1-1 FORMER PLANT AREA

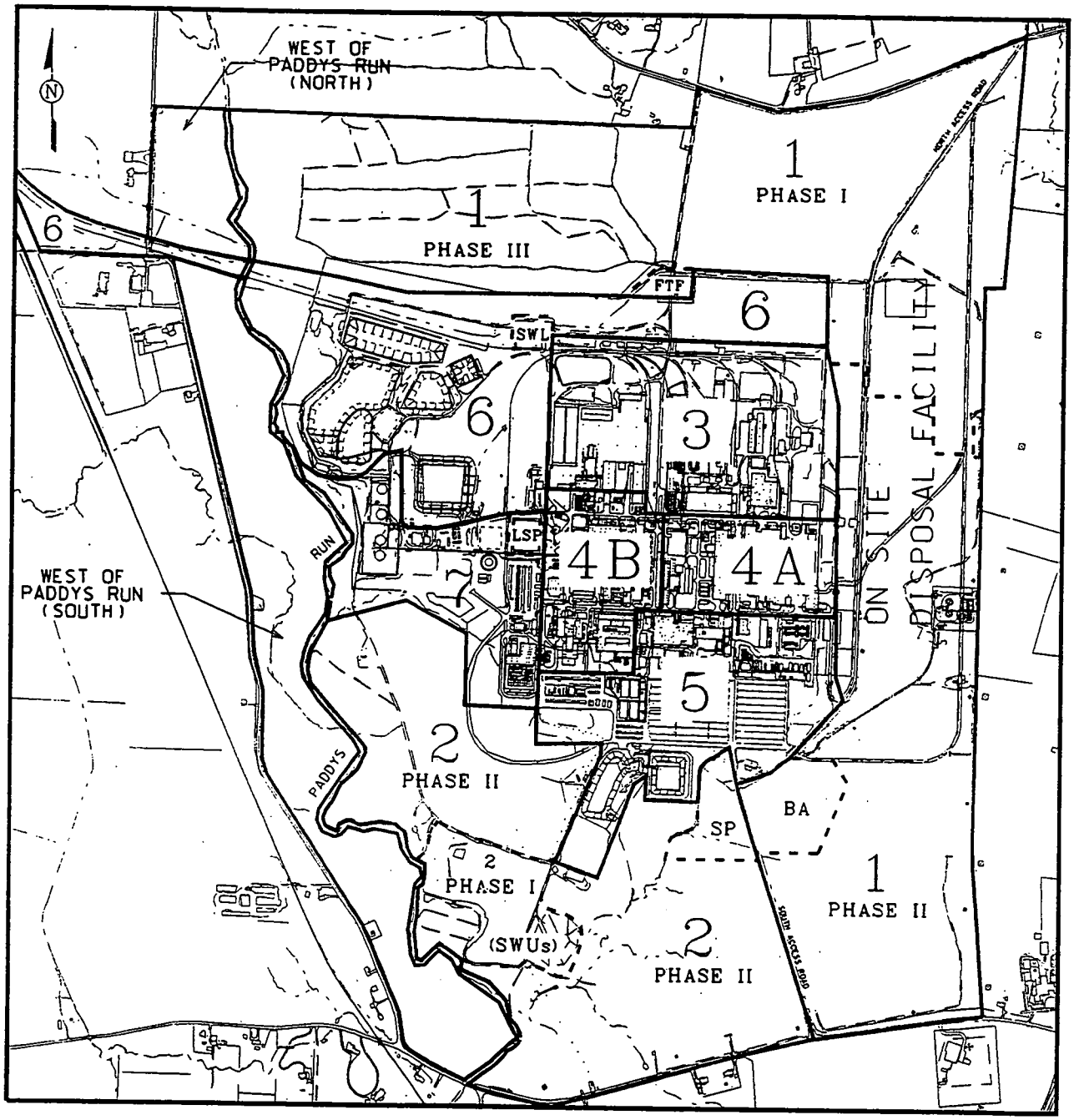

SCALE

1300 650 0 1300 FEET

LEGEND:

——— REMEDIATION AREA BOUNDARY

- - - - - PHASE BOUNDARY WITHIN A REMEDIATION AREA

FIGURE 1-2. SITEWIDE REMEDIATION AREAS

/usr/armo1/cru5/dgn/map/hcr/dpth/tonyk_22.dgn deg 2/04/91 STATE PLANAR COORDINATE SYSTEM 1983

18

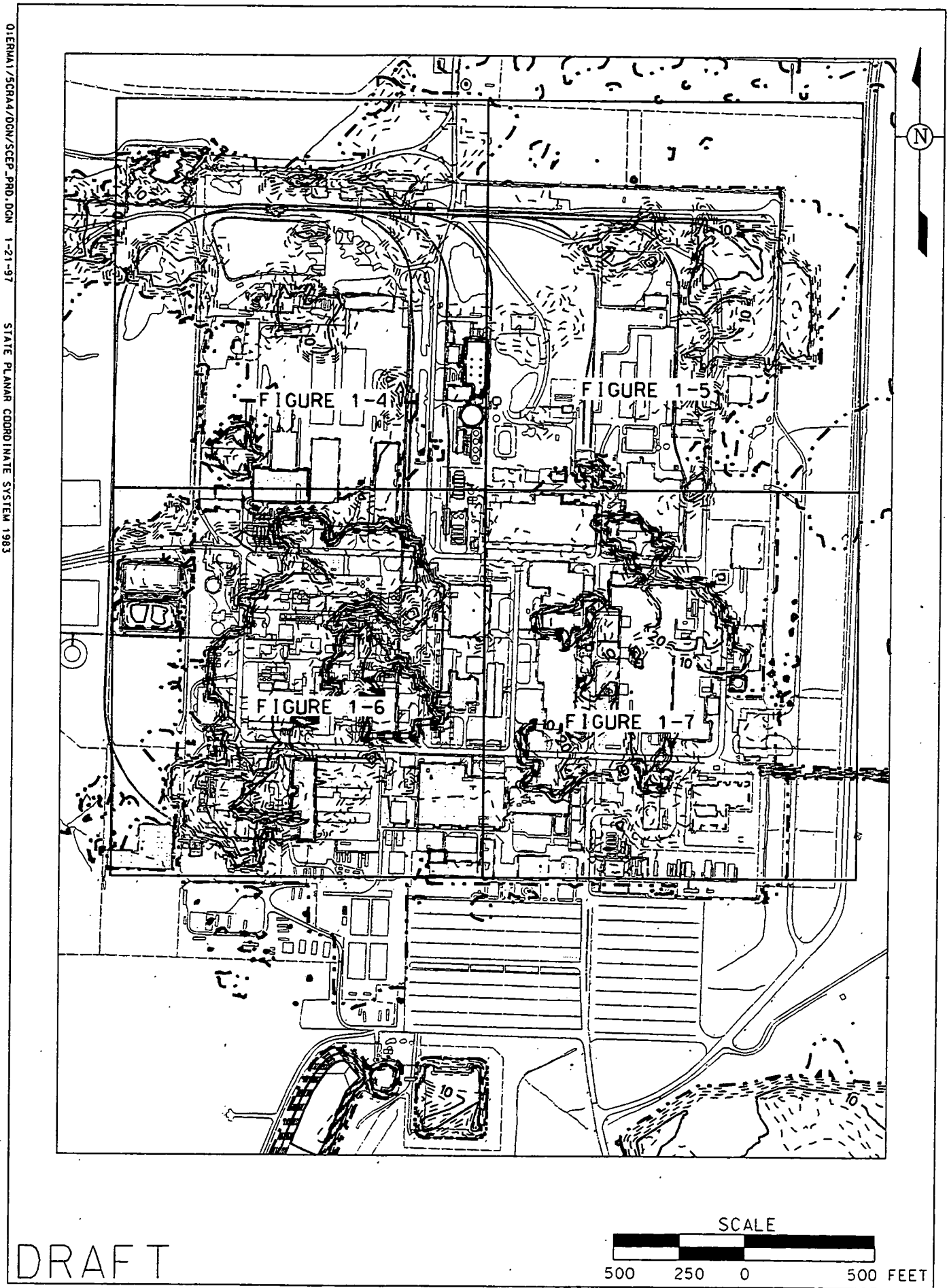

FIGURE 1-3. SOLID BLOCK MODELING PROPOSED REMEDIAL EXCAVATION DEPTH INCLUDING BUILDING FOUNDATIONS - OVERVIEW

ERMA1/SCRA4/DGN/SCP_PRD1.DGN 1-21-97 STATE PLANAR COORDINATE SYSTEM 1983

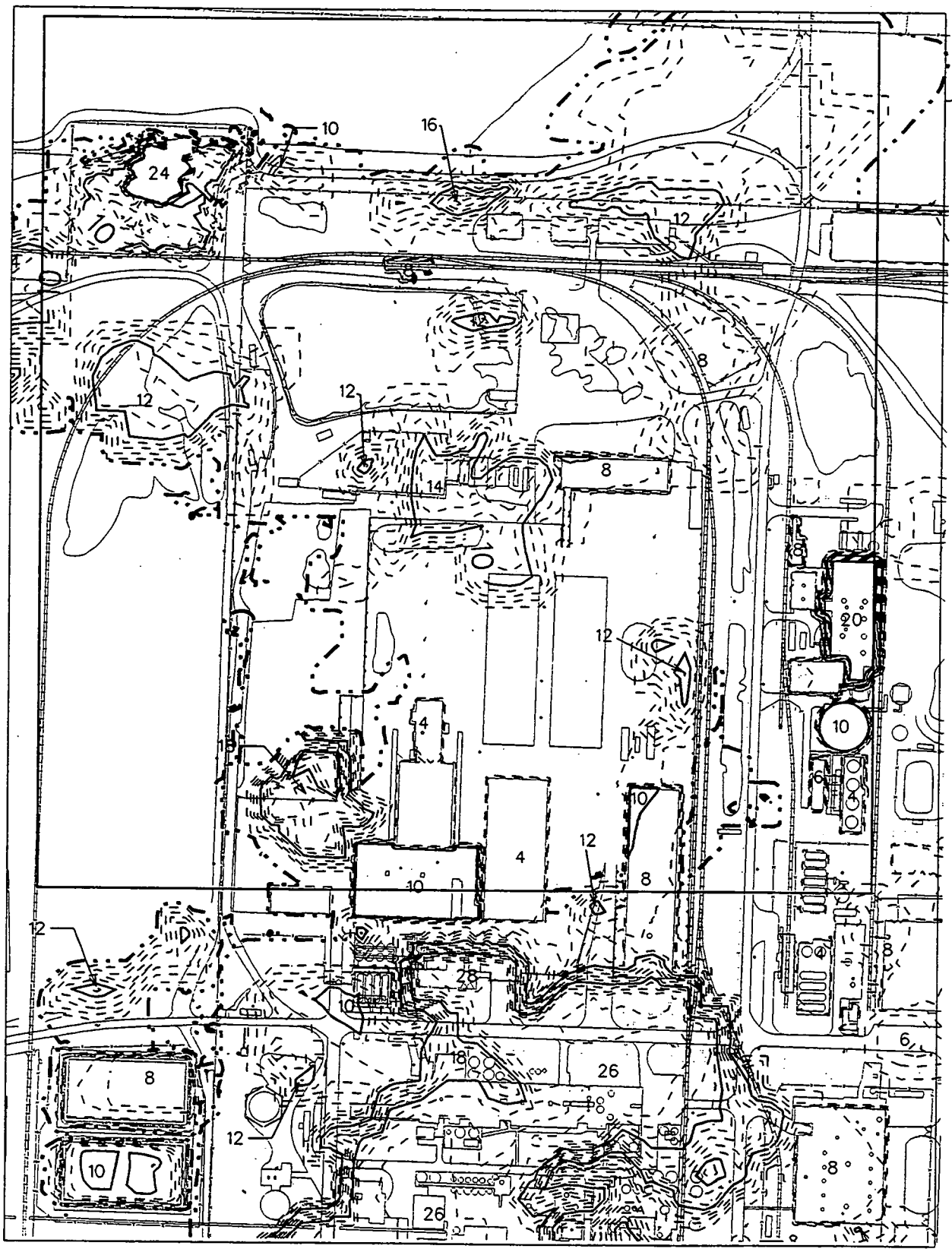

LEGEND:

NORTH WEST QUADRANT

SCALE

250 125 0 250 FEET

DRAFT

FIGURE 1-4. SOLID BLOCK MODELING PROPOSED REMEDIAL EXCAVATION DEPTH INCLUDING BUILDING FOUNDATIONS (NW QUADRANT)

ERMA1/5CRA4/DGN/SCP_PRD2.DGN 1-21-97 STATE PLANAR COORDINATE SYSTEM 1983

LEGEND:

NORTH EAST QUADRANT

SCALE

250 125 0 250 FEET

DRAFT

FIGURE 1-5. SOLID BLOCK MODELING PROPOSED REMEDIAL EXCAVATION DEPTH INCLUDING BUILDING FOUNDATIONS (NE QUADRANT)

ERMA1/5CRA4/DGN/SCP_PRD4.DGN 1-21-97 STATE PLANAR COORDINATE SYSTEM 1983

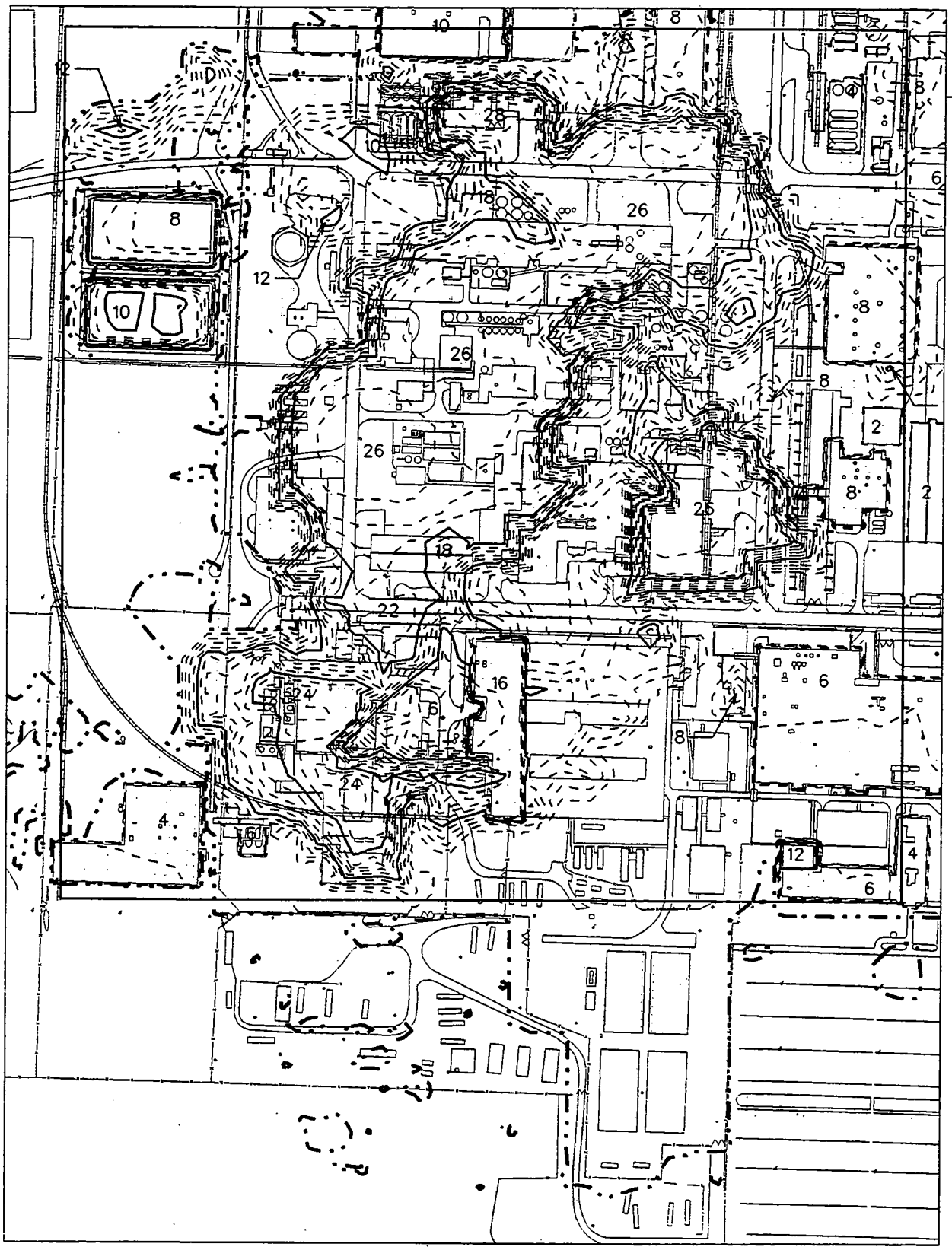

LEGEND:

SOUTH WEST QUADRANT

SCALE

250 125 0 250 FEET

DRAFT

FIGURE 1-6. SOLID BLOCK MODELING PROPOSED REMEDIAL EXCAVATION DEPTH INCLUDING BUILDING FOUNDATIONS (SW QUADRANT)

ERMA1/SCRA4/DGN/SCP_PRO3.DGN 1-21-97 STATE PLANAR COORDINATE SYSTEM 1983

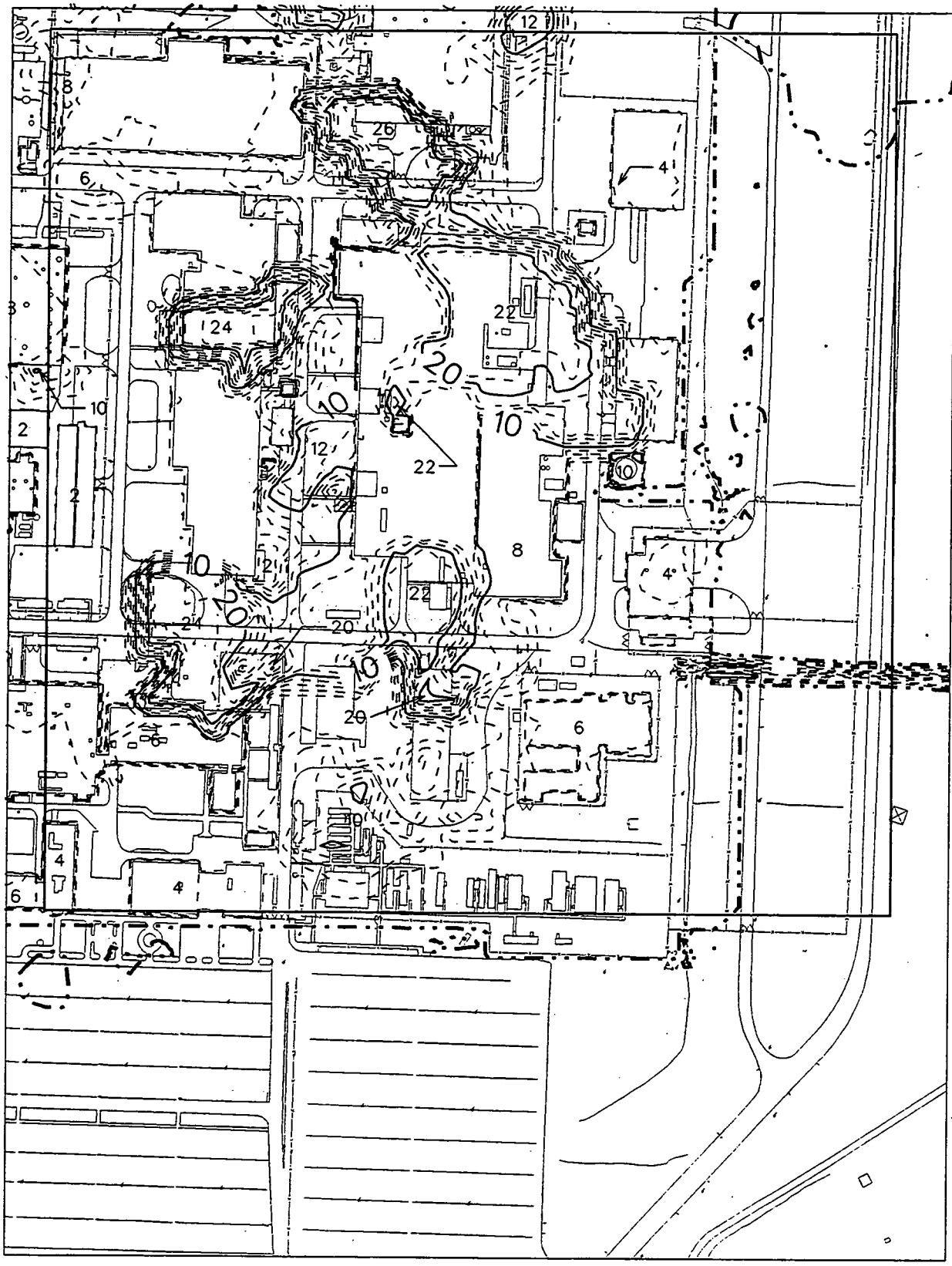

LEGEND:

SOUTH EAST QUADRANT

SCALE

250 125 0 250 FEET

DRAFT

FIGURE 1-7. SOLID BLOCK MODELING PROPOSED REMEDIAL EXCAVATION DEPTH INCLUDING BUILDING FOUNDATIONS (SE QUADRANT)

Section 2

2.0 SUMMARY OF PREVIOUS GEOTECHNICAL INVESTIGATIONS AND PATH FORWARD

Existing FEMP reports and documents were reviewed to summarize existing geotechnical data and information that would be useful in planning the geotechnical investigation of the former plant area. The reports reviewed are listed in Table 2-1.

Appendices N, O and P of the Remedial Investigation Report for Operable Unit 5 (DOE 1995b) contain a summary of geotechnical data and boring/well log data. These logs, and additional logs maintained by FDF, provided the input data for the GEOVOXEL model of the former plant area. The GEOVOXEL model and the boring logs describing subsurface conditions were used in planning the investigation. Figure 2-1 shows a perspective view of the modeled coarse-grained materials within the former plant area and the locations of all lithology data points used in the geologic portion of the modeling. This includes both borings and cone penetrometer testing (CPT) locations. Figure 2-2 shows a perspective view of the depth below the surface of modeled coarse-grained materials within the former plant area.

Figure 2-3 illustrates a perspective view of stratigraphic cross sections of the former plant area. For comparison purposes, the particular cross section locations shown in Figure 2-3 are approximately the same locations where cross sections were developed in the OU5 Feasibility Study. The subsurface areas that appear in white in Figure 2-3 are areas where a soil type could not be designated by the model due to insufficient data to have confidence in the results. These are areas that are likely to require additional testing in order to complete the model.

Figure 2-4 shows a perspective view of the surface of the former plant area after remedial excavation of contaminated materials and building foundations has occurred. According to the GEOVOXEL model, significant areas of the coarse-grained materials will be exposed after remedial excavation, primarily in the southwestern quadrant of the former plant area (see Figure 1-6).

Figure 2-5 shows an aerial view of the modeled coarse-grained materials within the former plant area. Likewise, Figure 2-6 shows an aerial view of the modeled coarse-grained materials within the former plant area; however, Figure 2-6 also shows the locations of stratigraphic cross-sections (A-A', B-B', C-C' and D-D'). Figures 2-7 and 2-8 show these cross-sections with anticipated subsurface stratigraphic conditions. The cross-section locations have been chosen due to the anticipated depths of remedial

excavation along the cross-sections. Figure 2-9 shows the location and depth of the planned excavations within the former plant area along with the locations of the stratigraphic cross-sections.

Figures 2-10 through 2-14 provide location maps for borings within the former plant area. In general, the boring logs provide visual classification of soils and standard penetration test results for the depths explored.

The FEMP Glacial Till/Vadoze Zone Hydraulic Investigations Report (DOE 1994) summarizes the results of an investigation to obtain hydraulic conductivity data on the glacial till sediments and to assess the properties of the gray clay contained within the till. Hydraulic conductivity data contained within this report includes results of 44 slug tests, four yield tests and two pumping tests within the former plant area and its immediate vicinity. These data, supplemented with additional data collected in the planned investigation, will be useful in evaluating the extent of dewatering required during excavation.

The geotechnical reports by Soils and Materials Engineers, Parsons, ATEC and H. C. Nutting typically summarize the boring logs and geotechnical laboratory test data for various projects within the former plant area conducted from 1982 through 1993. The subsurface explorations summarized in these reports, especially those by soils and materials engineers, often involved a foundation investigation for a proposed facility. The geotechnical laboratory tests summarized in these reports principally include soil classification tests (moisture content, specific gravity, grain size, unit weight and Atterberg limits), strength tests (unconfined compressive strength, and triaxial compression), consolidation tests, compaction tests, and California Bearing Ratio tests.

The Report of Foundation Investigation, Feed Materials Production Center, Fernald, Ohio, issued in 1952 by the U.S. Army Corps of Engineers, summarizes the results of the foundation investigation for construction of the Feed Materials Production Center (currently the FEMP). The report includes boring logs and results of geotechnical laboratory testing. The geotechnical laboratory tests summarized in these reports principally include soil classification tests (moisture content, grain size, specific gravity, unit weight and Atterberg limits) and consolidation tests.

Figure 2-15 shows the existing borings that have associated geotechnical laboratory test data and the planned excavations. Appendix J provides a summary of the tests at each location and the test depth. Borings with laboratory strength test data (unconfined compressive strength, triaxial compression of

fine grained soils) were plotted to evaluate their location relative to the excavations. These tests are typically in the upper 12 feet of soil. Locations of existing geotechnical test data were considered when siting borings planned for this investigation.

With respect to planned excavation in the former plant area, moisture content, unit weight, grain size, specific gravity, and Atterberg limits are primarily used for soil identification and classification purposes. Additionally, grain size tests provide data to be used in the evaluation of hydraulic conductivity of coarse-grained deposits, which is a parameter needed to evaluate excavation dewatering. Consolidation tests are performed to develop parameters needed for estimating potential settlement of structures, and thus are not critical with respect to the planned excavation. Strength tests, such as unconfined compression, triaxial compression, and direct shear tests are performed to develop strength parameters needed for evaluation of the stability of excavation slopes. Compaction (Proctor) tests are performed to develop parameters needed for control during construction, including placement of excavated materials in the OSDF. Hydraulic conductivity tests of coarse-grained soils assist in defining permeability characteristics. Appendix B contains the data quality objectives (DQOs) for the sampling and testing.

A summary of the types and number of existing and proposed geotechnical tests related to the former plant area are listed in Table 2-2.

TABLE 2-1
SUMMARY OF REPORTS REVIEWED FOR FORMER PLANT AREA GEOTECHNICAL DATA

Author	Date	Report
U.S. Department of Energy	March 1995	"Remedial Investigation Report for Operable Unit 5", Reference Appendices N, O and P
Parsons	May 1994	"FEMP Glacial Till/Vadoze Zone Hydraulic Investigations Report", Project Order 37
S&ME	June 30, 1986	"Slag Leach Facility, Uranium Control Pad, Drum Reconditioning Building", Project No. 021-86-169
S&ME	June 9, 1986	"Buildings 6 and 8 Expansion", Project No. 021-86-162
S&ME	May 15, 1987	"Decladding and Box Furnace Facility", Project No. 1221-87-178-1.0
S&ME	May 18, 1987	"General Sump", Project No. 1221-87-178-2.0
S&ME	July 28, 1987	"Proposed Laundry Room Upgrade/Locker Room Upgrade", Project No. 1221-87-257
S&ME	January 19, 1986	"Proposed Training Center and In Vivo Building" Project No. 021-86-363
S&ME	September 4, 1984	"NLO Facility UF_6 - UF_4 Facilities Expansion", Project No. 021-84-215
S&ME	August 31, 1984	"NLO Fernald, Ohio Plant 5 Expansion", Project No. 021-84-215
S&ME	February 16, 1987	"Derby Breakout and Slag Milling Area", Project No. 1221-87-114
S&ME	May 21, 1987	"N_2 Systems", Project No. 1221-87-178-3.0
S&ME	August 29, 1986	"Existing Water Tank", Project No. 021-86-261
S&ME	September 9, 1987	"Water Treatment Plant", Project No. 1221-87-288-1
S&ME	September 21, 1987	"Nu-Sal Furnace", Project No. 1221-87-288-2.0
S&ME	November 12, 1984	"NLO Railroad Relocation", Project No. 021-84-269
S&ME	September 20, 1988	"Geotechnical Exploration, Coal Storage Pile", Project No. 4144-88-309
ATEC	1982	"FMPC Water Pollution Control", Job No. 22-23071

TABLE 2-1
(continued)

Author	Date	Report
S&ME	March 14, 1988	"Receiving and Incoming Materials Inspection Area", Project No. 4144-88-119
H. C. Nutting	1984	"Report of Geotechnical Investigation, NLO Inc., Supply/Services Subcontract No. S-1143"
ATEC	1988	"Analytical Facilities Expansion", Job No. 22-831858
S&ME	April 9, 1987	"NO_x Destructor Facility", Project No. 1221-87-160-2.0
S&ME	April 27, 1987	"Decontamination and Decommissioning Facility", Project No. 1221-87-160-1.0
S&ME	April 22, 1987	"Proposed Warehouse", Project No. 1221-87-159
U.S. Army Corps of Engineers	February 1952	"Report of Foundation Investigation, Feed Materials Production Center, Fernald, Ohio"
Parsons	September 1993	"Central Storage Facility Subsurface Exploration", Project Order 20
Parsons	September 1993	"Subsurface Exploration Report, Plant 1 Ore Silos", Project Order 22
Parsons	July 1993	"Plant 7 Dismantling Geotechnical Report", Project Order 32

Note for Table 2-1:
Authors:
U.S. Department of Energy - Fernald Field Office, Ohio
Parsons - Parsons ERA Project, Cincinnati, Ohio
S&ME - Soils and Material Engineers, Cincinnati, Ohio
H. C. Nutting - The H. C. Nutting Company, Cincinnati, Ohio
U.S Army Corps of Engineers - Ohio River Division

TABLE 2-2
SUMMARY OF EXISTING AND PROPOSED GEOTECHNICAL TESTING
FORMER PLANT AREA

Test	Existing Geotechnical Data	Former Plant Area Investigation (Proposed[1])	Total
Moisture Content	714	112	826
Grain Size/Hydrometer	269	126	395
Atterberg Limits	158	131	289
Unconfined Compressive Strength	60	20	80
CD Triaxial	0	5	5
CU Triaxial	6	6	12
Hydraulic Conductivity (Coarse-Grained)	---	5	5
Proctor Test	12	5	17
Direct Shear Test	---	5	5

[1]See Section 7.0 for more details on proposed tests

FIGURE 2-1
GEOVOXEL MODELED COARSE GRAINED MATERIAL LOCATIONS
[PERSPECTIVE VIEW]

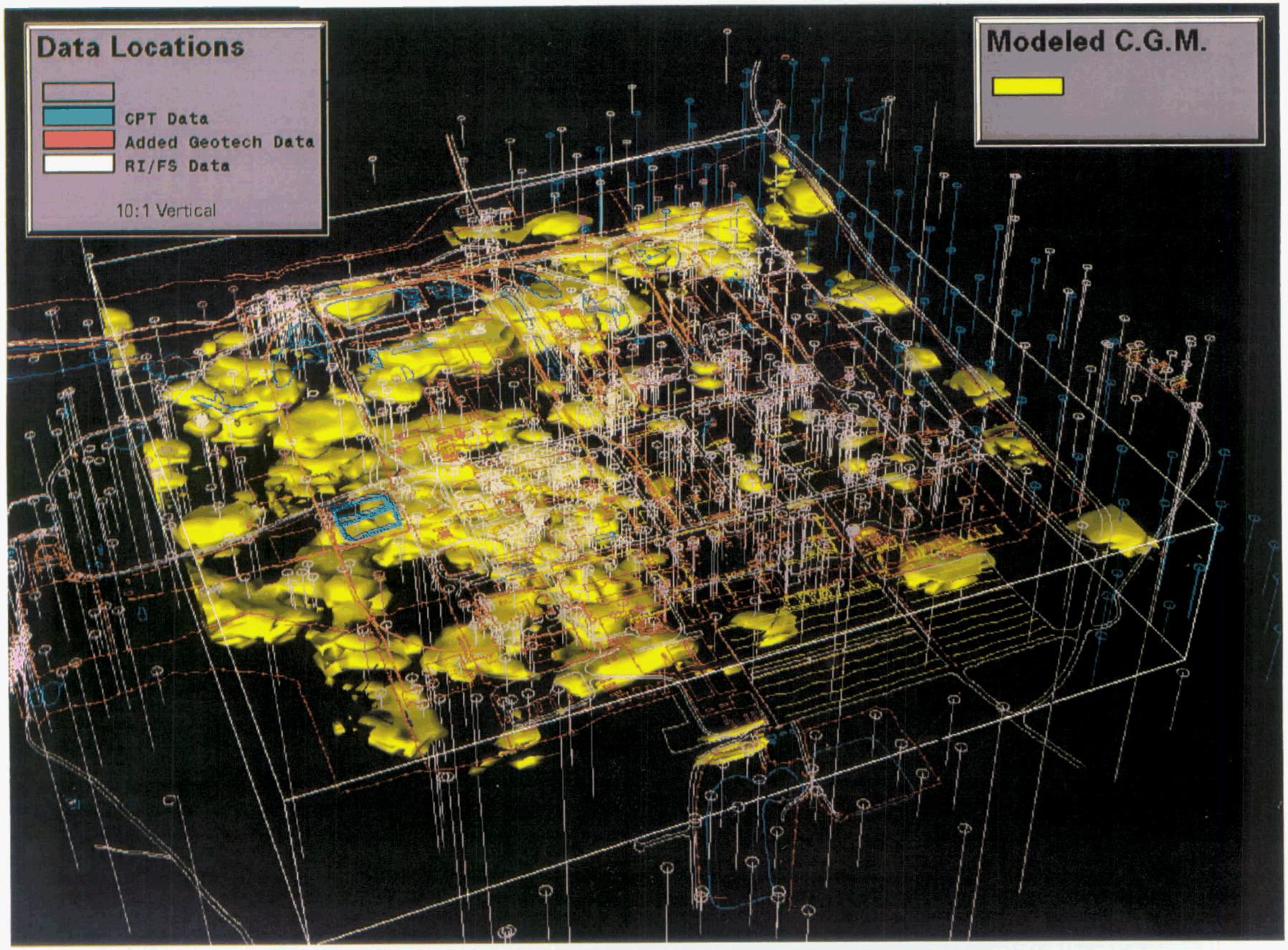

FIGURE 2-2
GEOVOXEL MODELED
COARSE GRAINED MATERIAL DEPTH
[PERSPECTIVE VIEW]

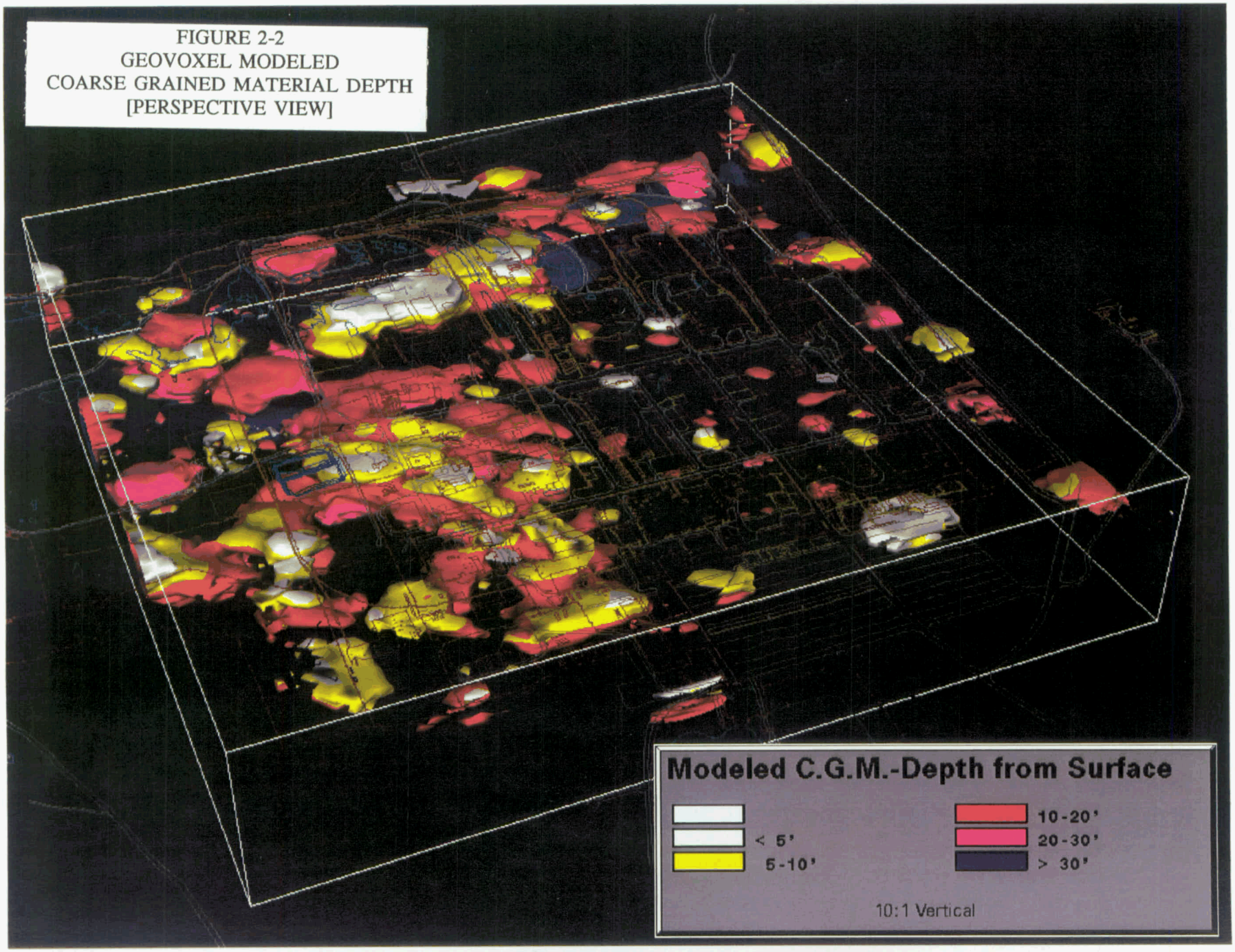

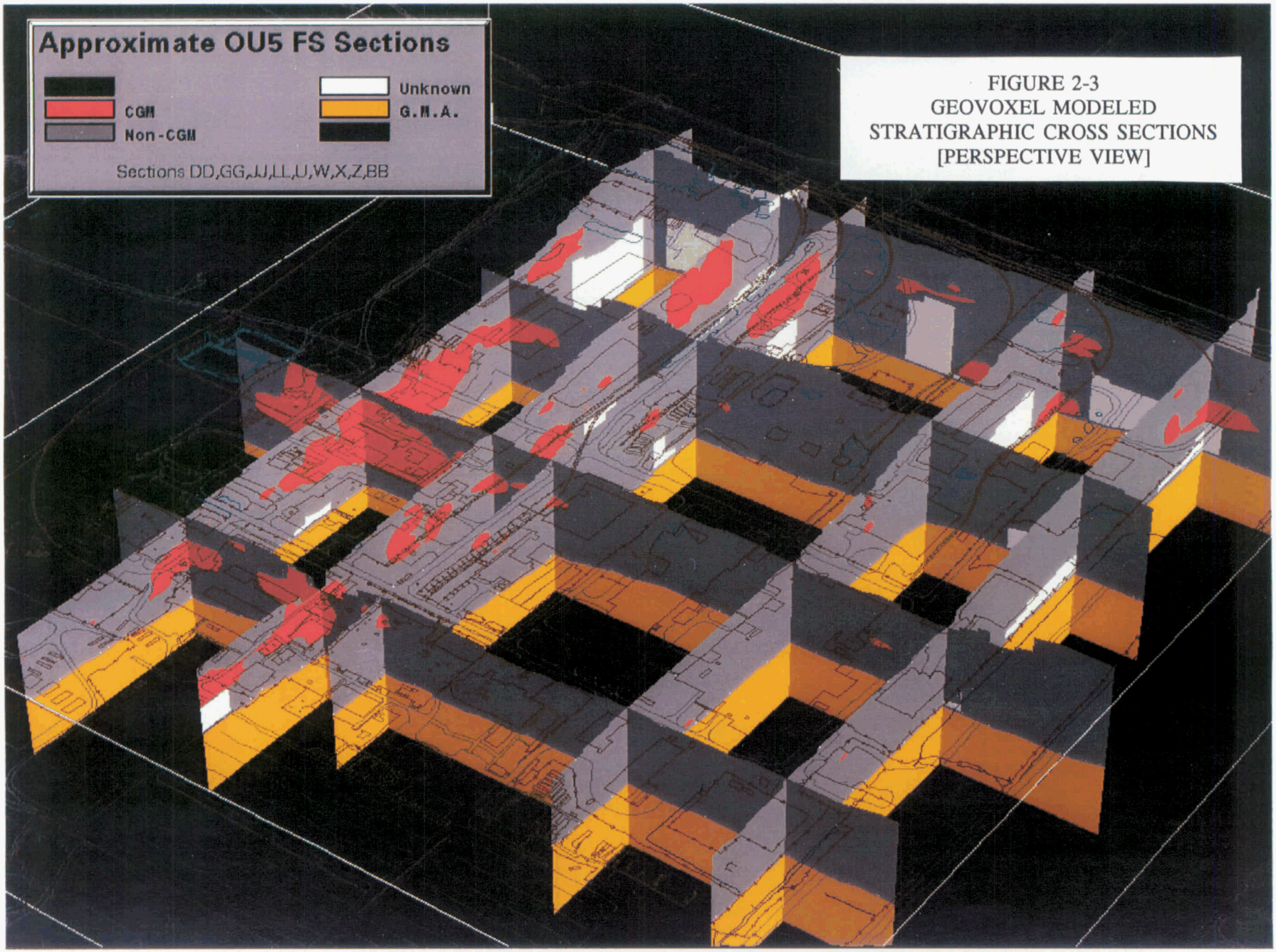

FIGURE 2-3
GEOVOXEL MODELED
STRATIGRAPHIC CROSS SECTIONS
[PERSPECTIVE VIEW]

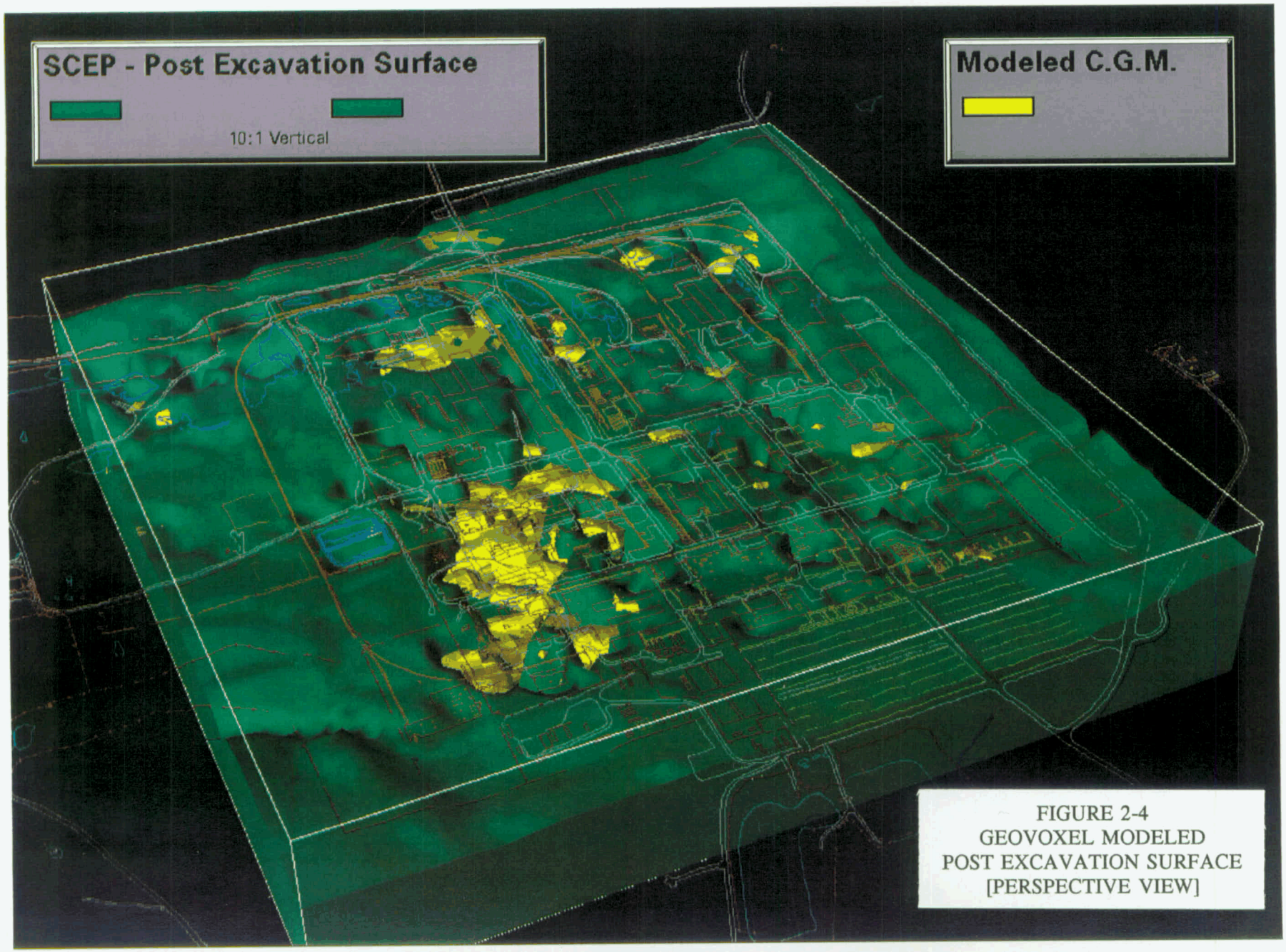

FIGURE 2-4
GEOVOXEL MODELED
POST EXCAVATION SURFACE
[PERSPECTIVE VIEW]

FIGURE 2-5
GEOVOXEL MODELED
COARSE GRAINED MATERIAL LOCATIONS
[AERIAL VIEW]

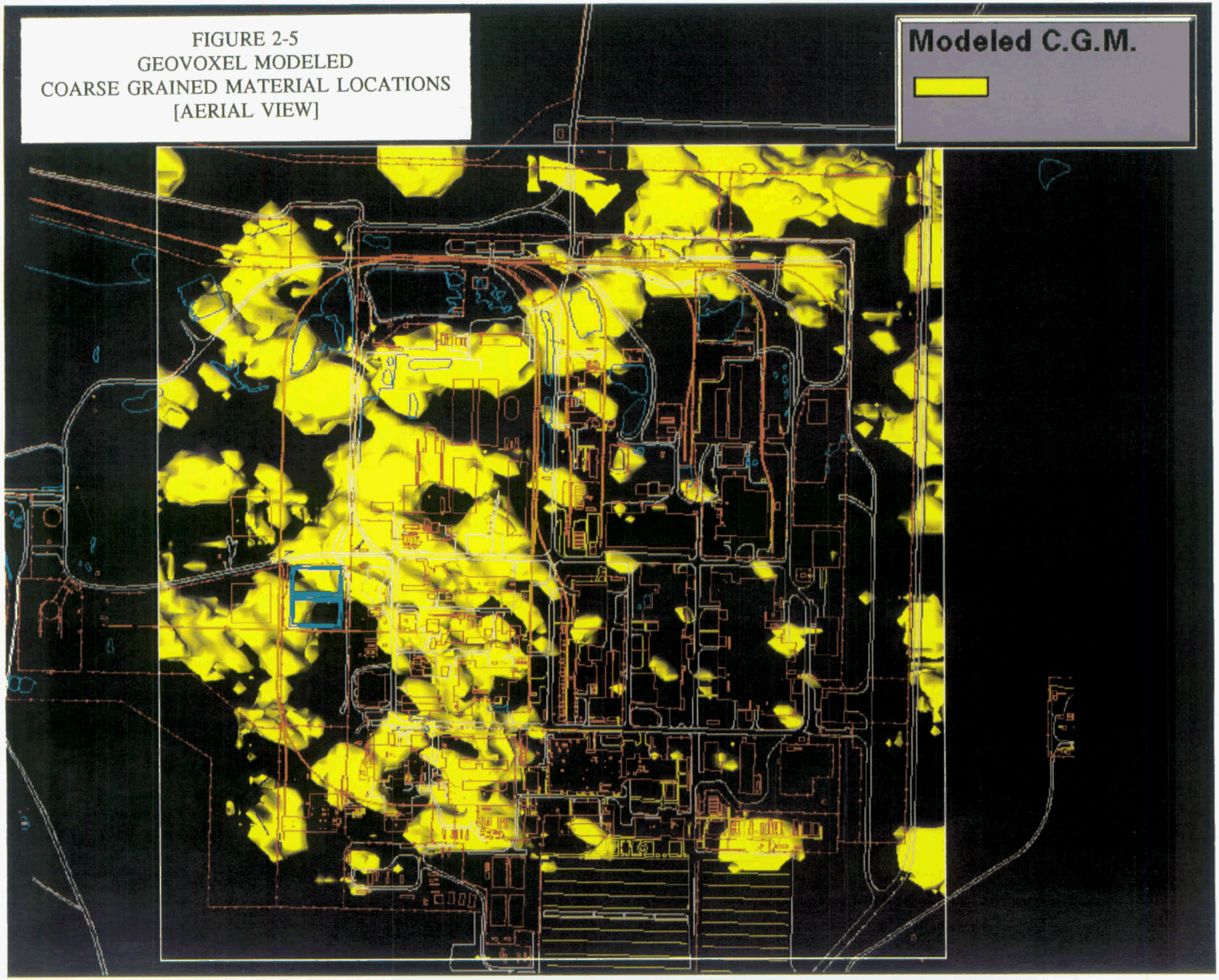

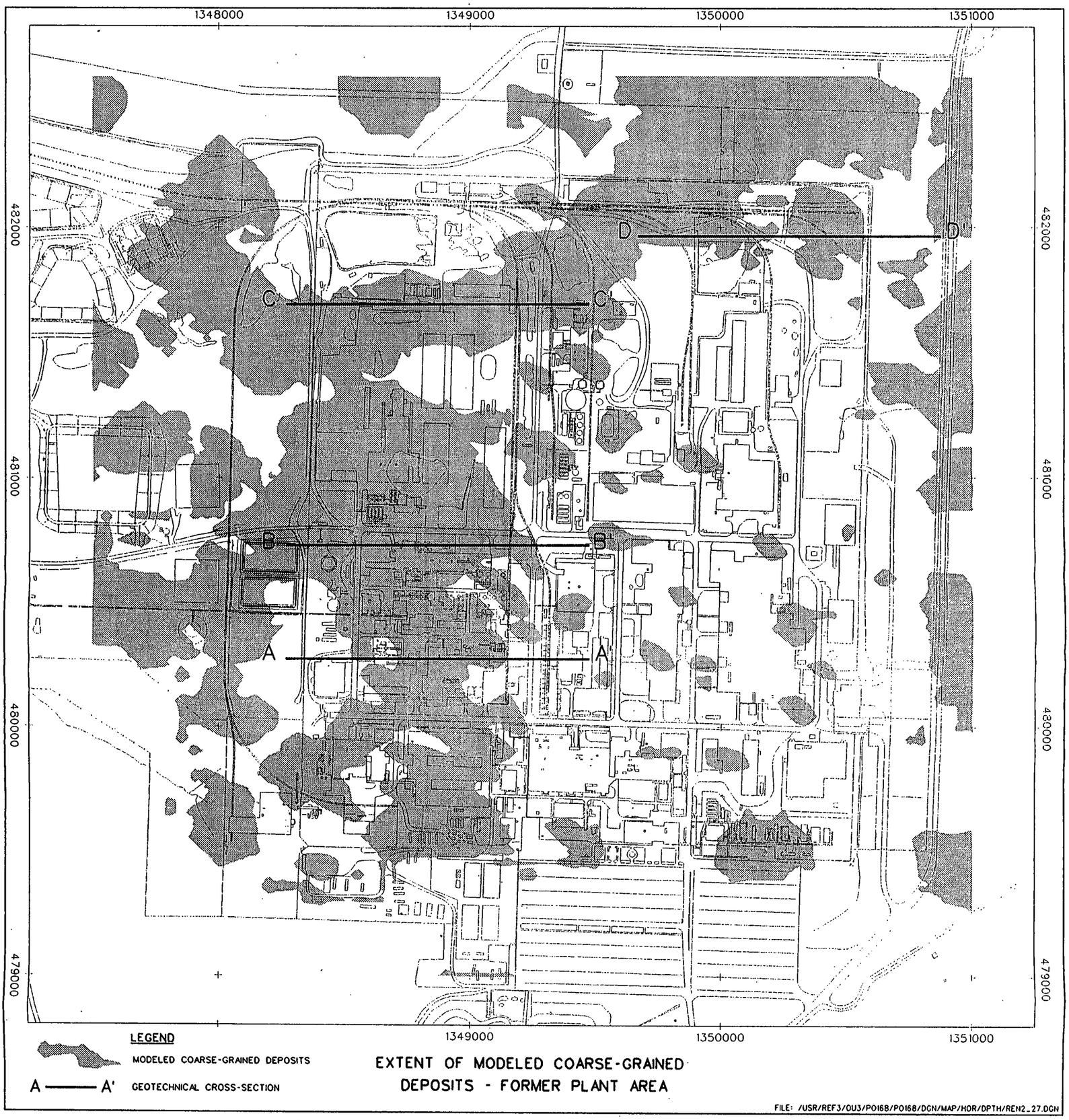

ren2_27.m po165erma@ws415. Tue Feb 4 10:38:35 EST 1997

FIGURE 2-6

arch_2d.m po165erma@ws415. Fri Jan 17 16:34:56 CST 1997

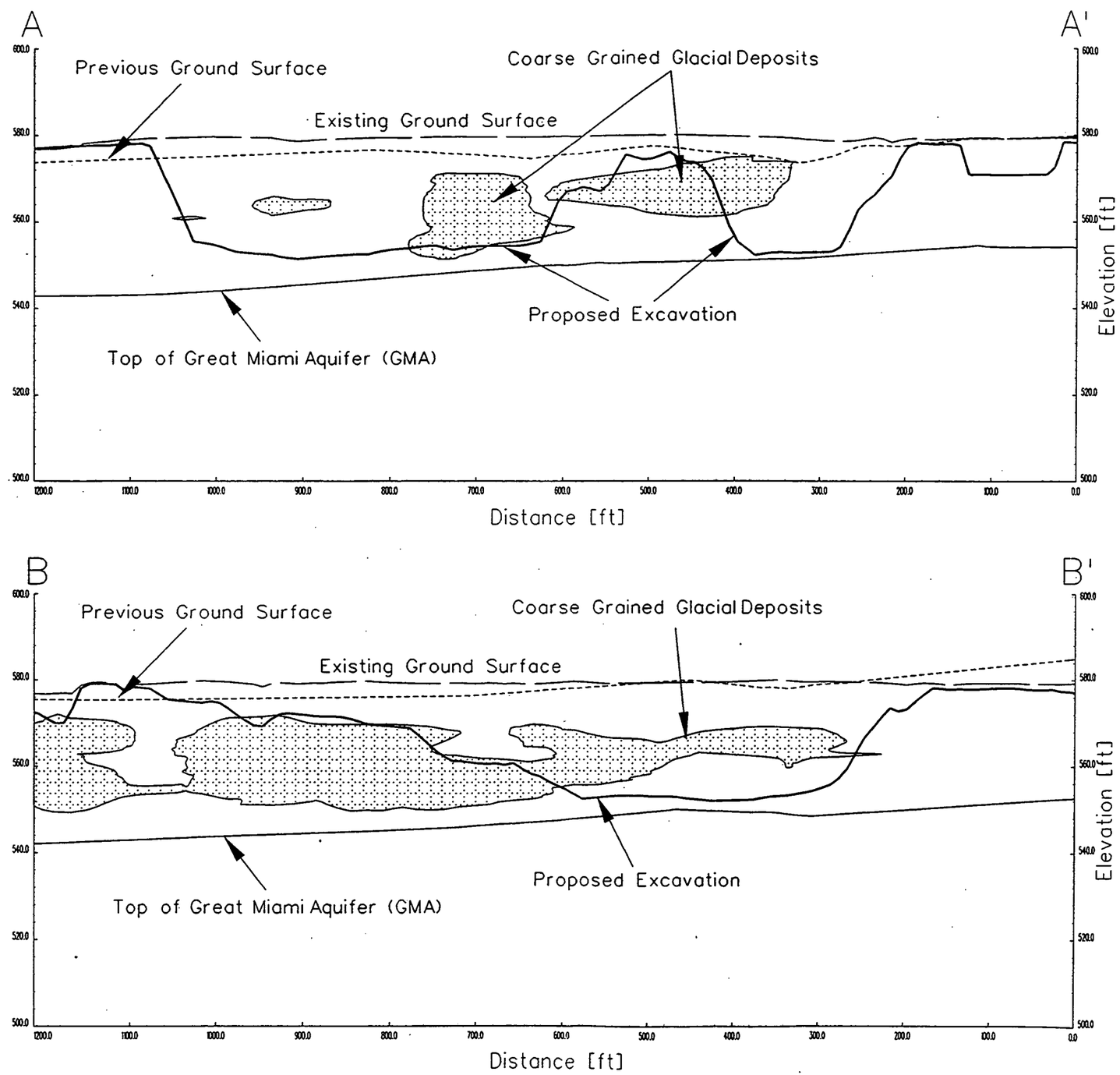

FIGURE 2-7

Cross-Sections A-A' and B-B' - Excavation Sites, Former Production Area

Vertical Exaggeration = 5x

FILENAME: /USR/REF3/OU3/PO168/PO168/ARCH_2D.DGN

arch_2d.m po165erma@ws415. Fri Jan 17 16:37:35 CST 1997

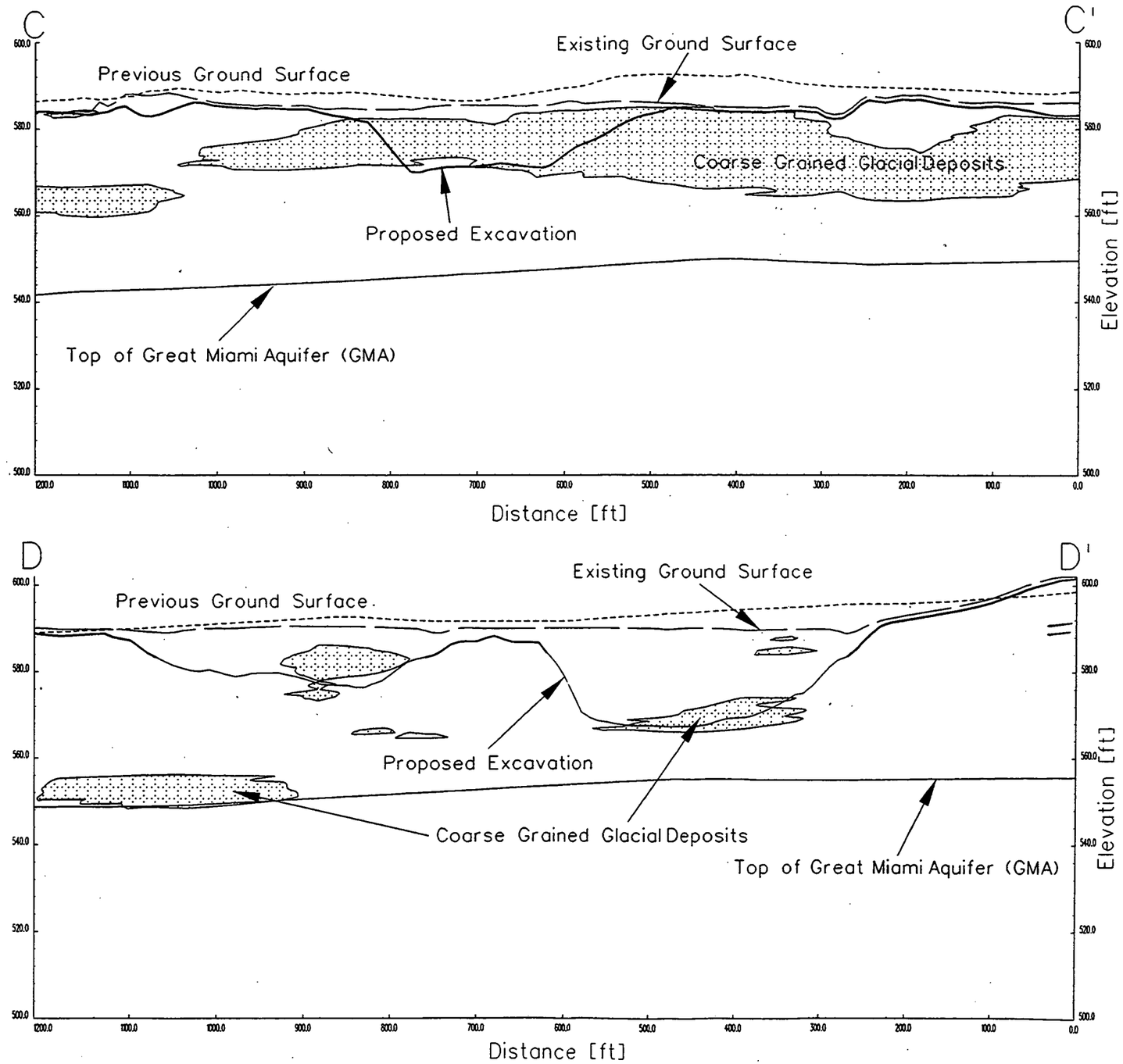

FIGURE 2-8

Cross-Sections C-C' and D-D' - Excavation Sites, Former Production Area

Vertical Exaggeration = 5x

FILENAME: /USR/REF3/OU3/PO168/PO168/ARCH_2D.DGN

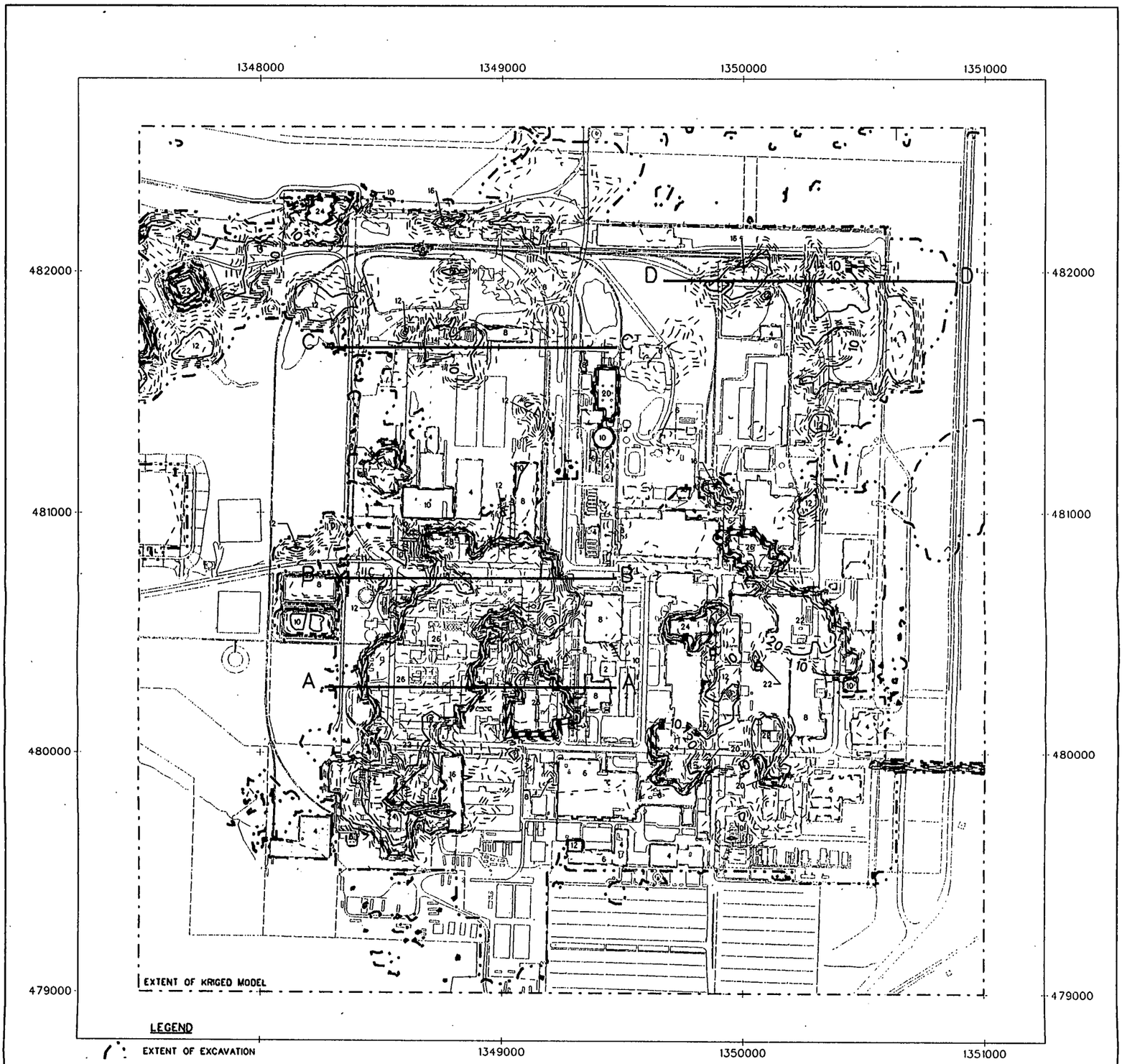

FIGURE 2-9

EXCAVATION PLAN SHOWING GEOVOXEL CROSS-SECTION LOCATIONS

FILE: /USR/REF3/OU3/PO168/PO168/DGN/SCEP_PRD.DGN

scep_prd.m po165erma@ws415. Fri Jan 17 16:23:08 CST 1997

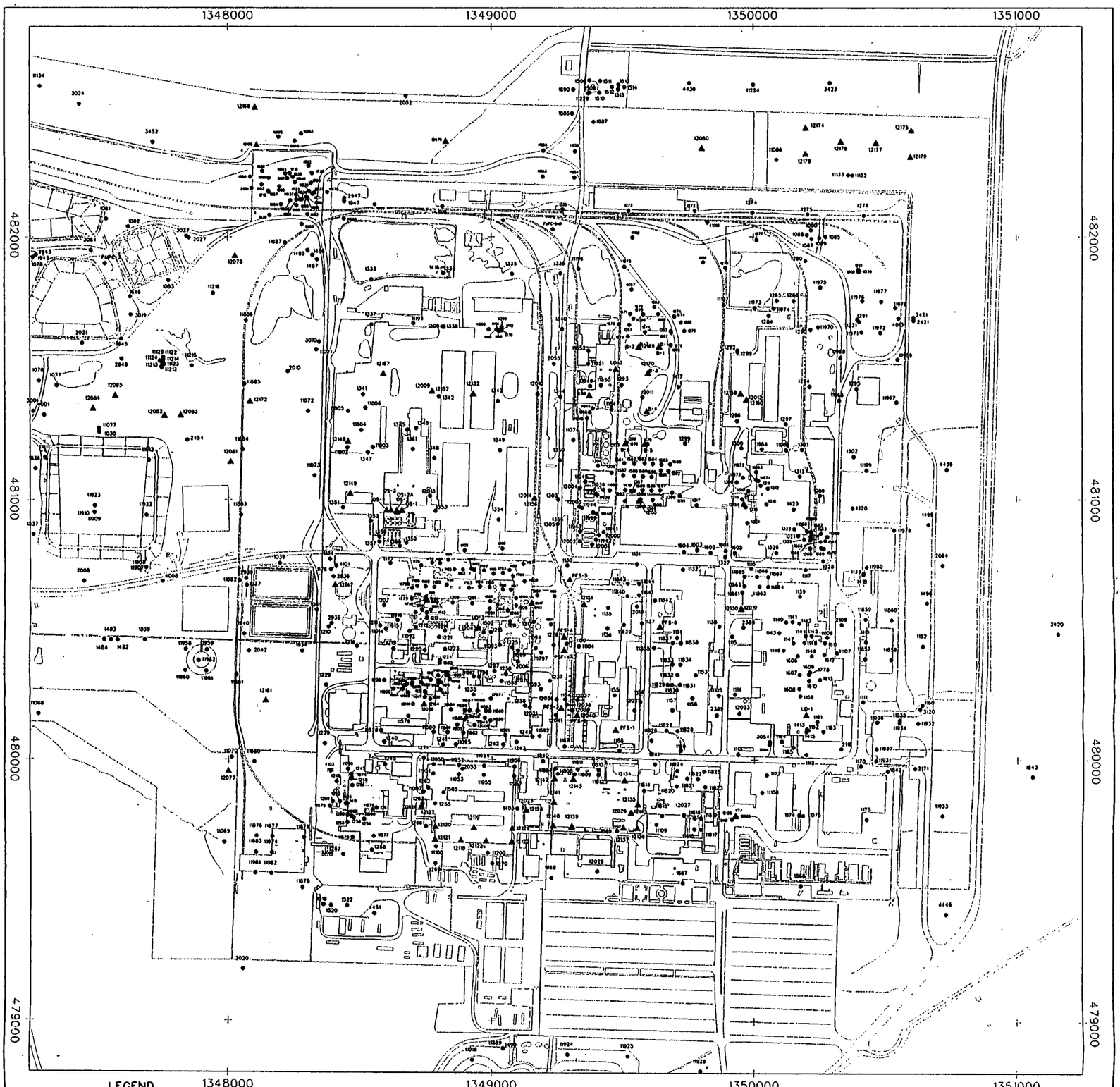

LEGEND

- • RI/FS DATA LOCATIONS
- ▲ ADDITIONAL DATA LOCATIONS

EXISTING BORING LOCATION MAP
FORMER PRODUCTION AREA

FIGURE 2-10

FILE: /USR/REF3/003/P0168/P0168/DGN/MAP/HOR/DPTH/STRATDATA.DGN

stratdata.m po165erma@ws415. Fri Jan 17 13:43:25 CST 1997

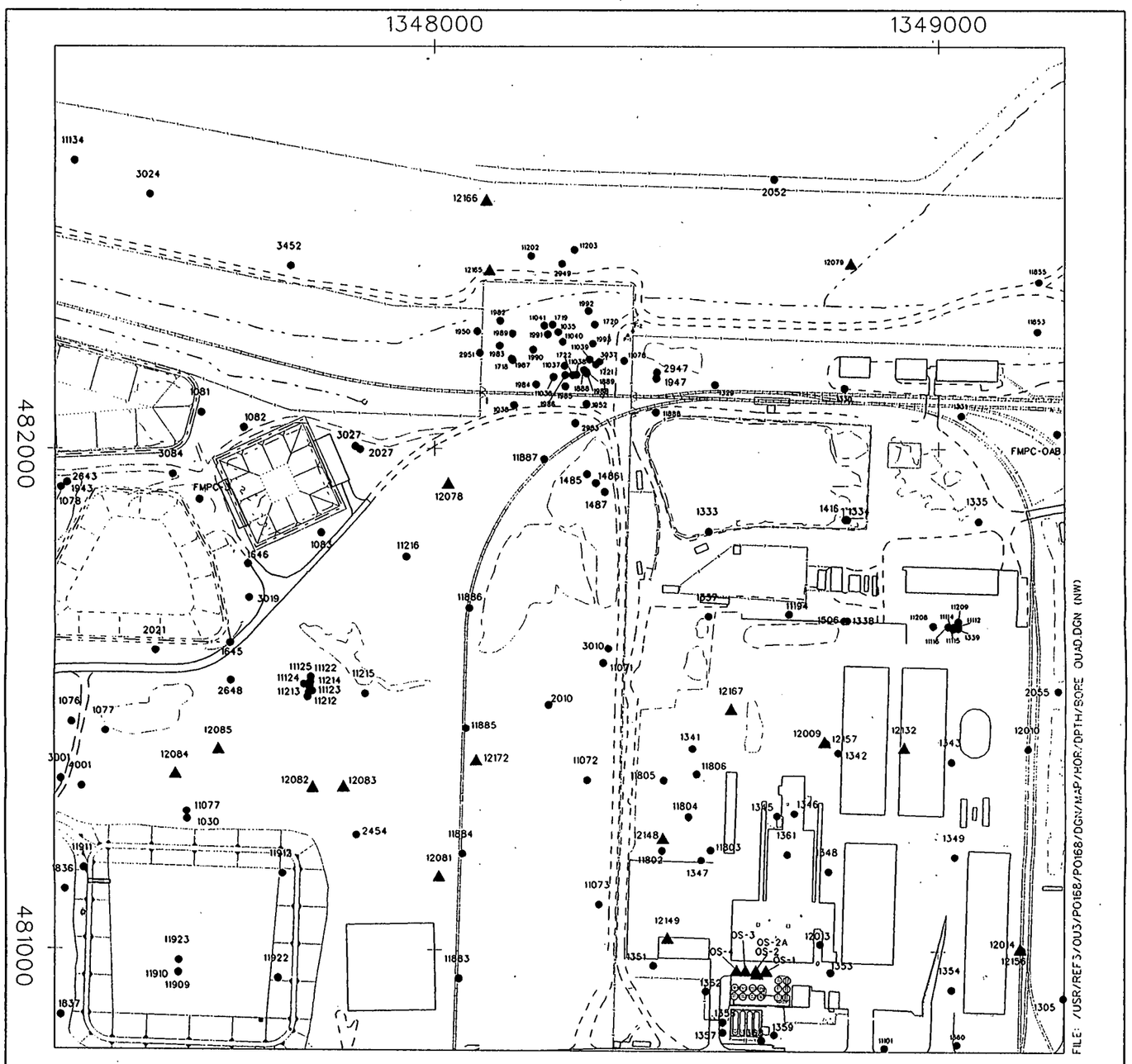

LEGEND

- ● RI/FS DATA LOCATIONS
- ▲ ADDITIONAL DATA LOCATIONS

EXISTING BORING LOCATION MAP
FORMER PLANT AREA - NW QUADRANT

FIGURE 2-11

bore_quad.m po165erma@ws415. Tue Feb 4 13:09:37 EST 1997

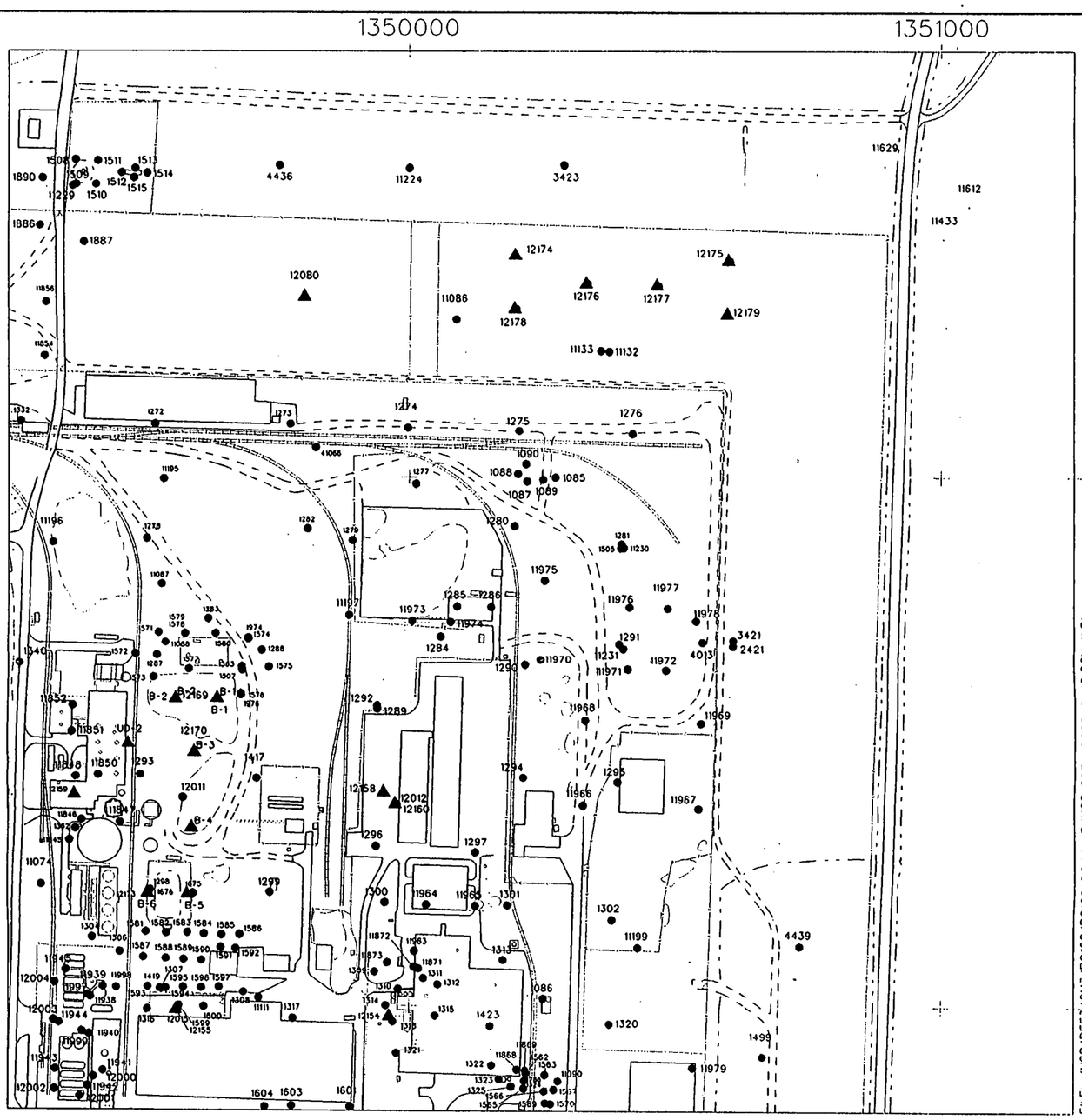

LEGEND

- RI/FS DATA LOCATIONS
- ADDITIONAL DATA LOCATIONS

EXISTING BORING LOCATION MAP
FORMER PLANT AREA - NE QUADRANT

FIGURE 2-12

bore_quad.m po165erma@ws415. Tue Feb 4 13:08:51 EST 1997

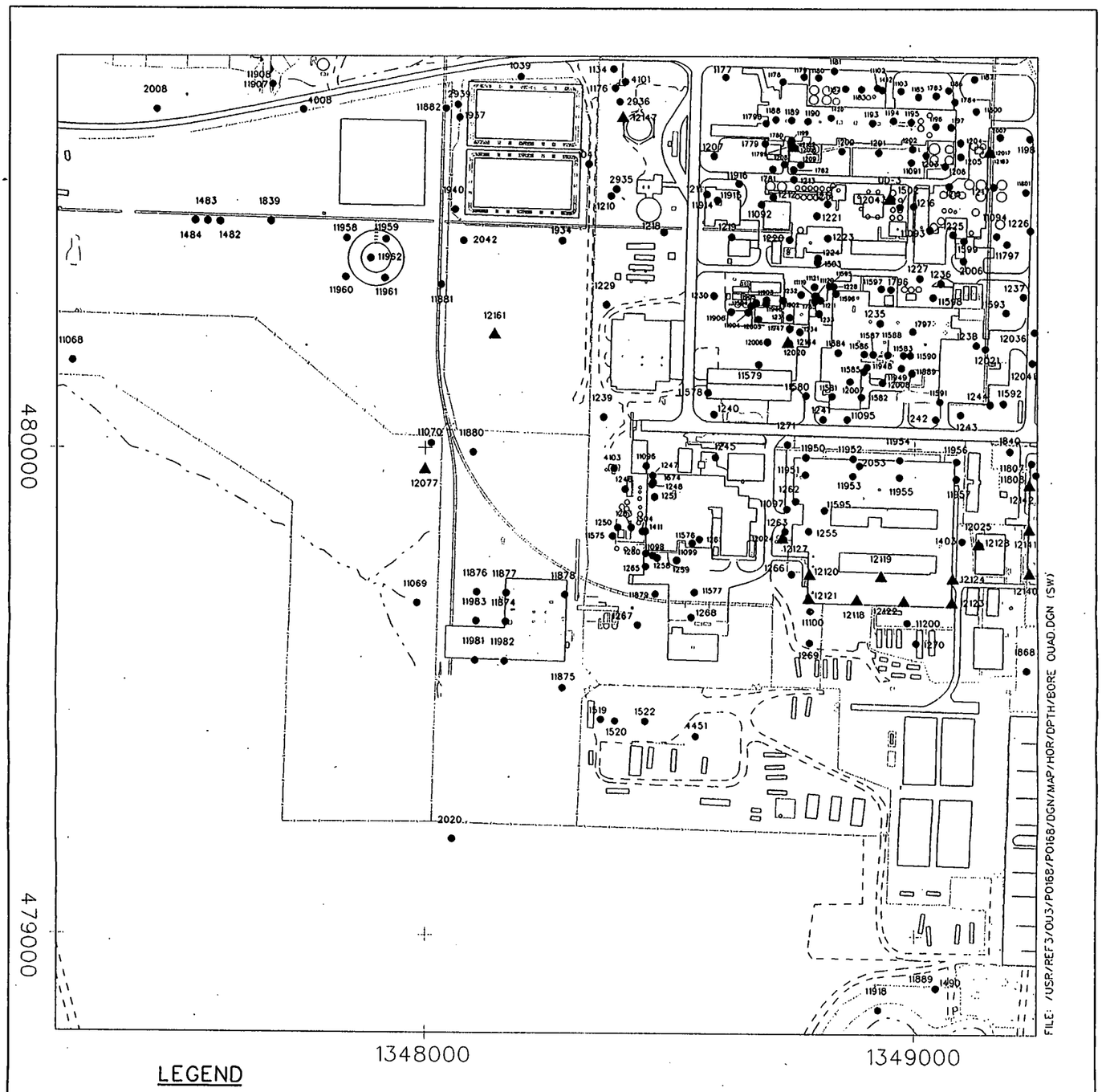

EXISTING BORING LOCATION MAP
FORMER PLANT AREA - SW QUADRANT

FIGURE 2-13

bore_quad.m po165erma@ws415. Tue Feb 4 13:07:11 EST 1997

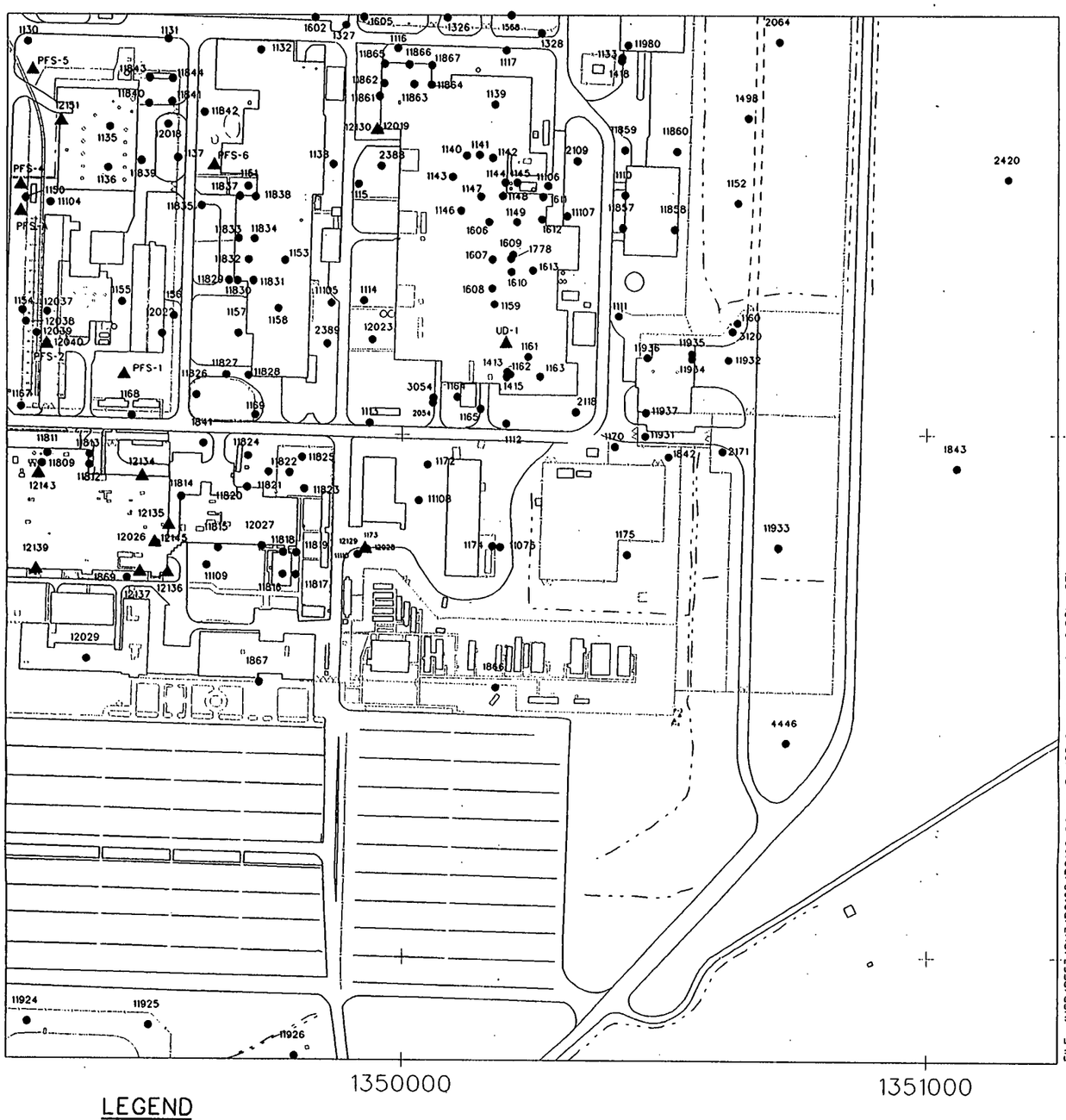

LEGEND

- ● RI/FS DATA LOCATIONS
- ▲ ADDITIONAL DATA LOCATIONS

EXISTING BORING LOCATION MAP
FORMER PLANT AREA - SE QUADRANT

FIGURE 2-14

bore_quad.m po165erma@ws415. Tue Feb 4 13:08:09 EST 1997

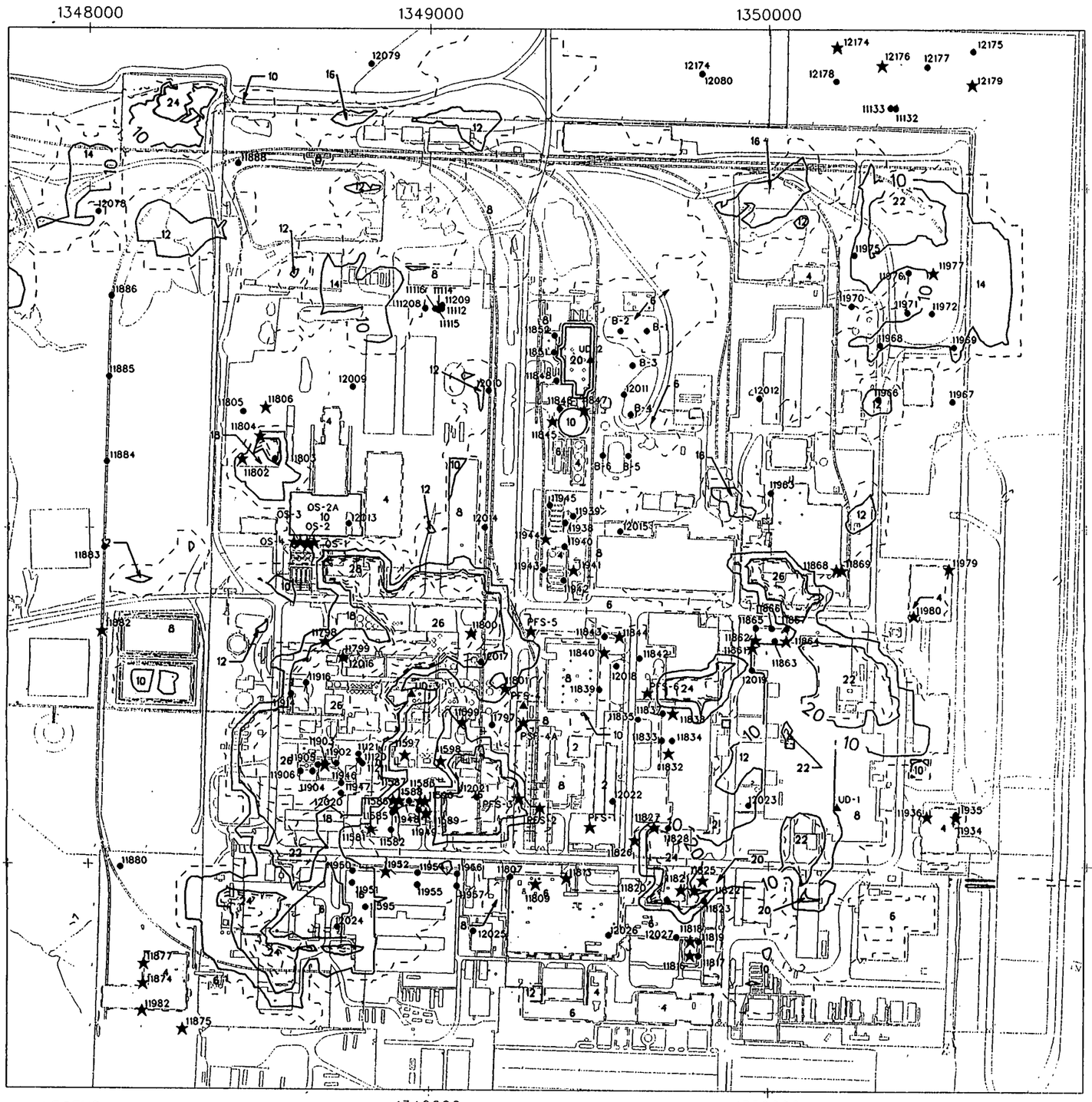

LEGEND

11880 ● / PFS-4 ▲ — BORING WITH PRIMARILY LAB CLASSIFICATION AND/OR MOISTURE CONTENT TEST DATA

11874 ★ — BORING WITH LAB STRENGTH TEST DATA

— — — — ESTIMATED EXCAVATION CONTOURS

22 (16) — EXCAVATION DEPTHS

COORDINATES IN NAD STATE PLANE OHIO SOUTH, 1983

EXISTING LABORATORY TEST DATA LOCATION
MAP - FORMER PLANT AREA

FIGURE 2-15

FILE: /USR/REF3/OU3/PO168/PO168/DGN/MAP/HOR/DPTH/GEOT_LAB.DGN

geot_lab.m po165erma@ws415. Tue Feb 4 15:02:35 EST 1997

Section 3

3.0 ORGANIZATION AND RESPONSIBILITIES

3.1 ORGANIZATION

This section describes the organizational and management structure to be used in implementing the geotechnical investigation of the former plant area. Environmental remediation activities have been implemented at the FEMP site. FDF has contracted with the U.S. Department of Energy-Fernald Area Office (DOE-FN) for FEMP remediation activities and serves as coordinator of technical support and remediation subcontractors. Under the FDF organizational structure, soil activities will be the responsibility of the Soils Characterization and Excavation Project, in conjunction with various other FDF departments.

3.2 ORGANIZATIONAL RESPONSIBILITIES

The Soils Characterization and Excavation Project will be responsible for implementing the geotechnical investigation of the former plant area, including the following:

- Prepare DQOs;
- Perform overall planning, integration and execution of the geotechnical investigation;
- Prepare the Geotechnical Sampling and Testing Plan (GSTP) per regulatory guidance for conducting field investigations, sampling and testing tasks;
- Oversee and manage field sampling activities; and
- Approve and document scope variances and field changes.

Sampling for this project will be performed by a drilling subcontractor and personnel from the FDF Environmental Monitoring Department.

Managerial oversight of the project will be provided by the Soils Characterization and Excavation Project Manager. Engineering oversight will be provided by the Soils Characterization and Excavation Engineering Manager. The following functional groups will be assigned to assist the Engineering Manager in performing the geotechnical investigation (see Figure 3-1 for a schematic presentation of the organizational relationships):

- Engineering Task Manager - responsible for implementing the geotechnical investigation program objectives and reviewing data.

- Soil and Water Projects - responsible for obtaining the required drilling subcontract services.

- Drilling Subcontractor - responsible for drilling equipment and proper execution of drilling and sampling activities in accordance with the approved GSTP.

- Environmental Monitoring - responsible for the following:
  - supervising the drilling subcontractor in the field
  - ensuring the proper sampling equipment is available and in serviceable condition
  - ensuring that proper sampling containers are available
  - collecting samples in accordance with the approved GSTP
  - completing field activity logs, sample collection logs and Chain of Custody/Request for Analyis forms
  - labeling, handling, and storing samples prior to sample delivery/shipment
  - preparing off-site shipment of samples
  - assuring that sampling equipment has been properly decontaminated between each sampling point
  - assuring that drill cutting and decontamination water are disposed properly

- Parsons Engineering Inc. - responsible for the following:
  - developing the technical portions of the GSTP including determining the locations and depths of sampling, which archived samples will be tested, and which specific tests will be performed.
  - providing technical guidance during drilling and sampling operations
  - contracting and overseeing sample testing
  - providing equipment and technical support to perform grain-size analysis on archived samples
  - developing lithographic boring logs
  - interpreting geotechnical data
  - preparing the geotechnical report

- Safety and Health - responsible for assuring the safe conduct of on-site investigation field activities and for overall health of site workers.

- Quality Assurance (QA) - responsible for the following independent investigation activities:
  - assuring field activities follow the identified procedures/GSTP
  - providing QA oversight of subcontractor activities
  - assuring that any deviations from the scope of work are properly documented
  - approve data quality objectives

- Project Controls - responsible for tracking costs and scheduling data.

- Regulatory Programs - responsible for assuring that the regulatory basis for design is met by the proposed data collection activity.

- Engineering - responsible for identifying underground utilities.

3.3 RESPONSIBILITY MATRIX

The following is a responsibility breakdown of the geotechnical field investigation tasks.

1.	Procurement	
a.	Drilling	FDF Subcontractor
b.	Geotechnical Testing	A-E and A-E Contracted Laboratory
2.	Access	
a.	On-site Access Coordination	FDF
b.	Vehicle/Equipment Inspection	FDF
c.	Site Access Training	FDF
d.	Health & Safety Training	FDF
3.	Permits and Approvals	
a.	Site Penetration Permits	FDF
b.	Other Site Permits/Approvals	FDF
4.	QA/QC Activities	
a.	Overall QA/QC Management	A-E+FDF
b.	Field Activities QA/QC	A-E+FDF
c.	Laboratory QA/QC	A-E
5.	Field Investigation Program	
a.	Scope of Field Program	A-E+FDF
b.	Health & Safety Management/Oversight	FDF
c.	Field Health & Safety	A-E+FDF
d.	Location Surveying	FDF
e.	Specify Sample Depth, Type, Quantity	A-E
f.	Document Sampling Methods are in accordance with ASTM Standards	A-E
g.	Coordinate On-site Equipment Moves	A-E+FDF
h.	Prepare Boring Logs	A-E
i.	Collect Samples	FDF
j.	Prepare Field Notes and Documents	A-E+FDF
k.	Coordinate Sample Movement/Release	FDF
6.	Interpretation of Results	
a.	Classify tested material	A-E
b.	Characterize and define the geotechnical properties (including permeability) of the granular material	A-E
c.	Characterize and define the geotechnical properties of non-granular materials	A-E

d.	Develop design slopes for excavation of Soils from within the former plant area	A-E
e.	Develop grading and site restoration recommendations for areas affected by impacted soil removal	A-E
f.	Develop dewatering requirements and make relevant recommendations.	A-E

3.4 SAMPLING SCHEDULE

Sampling will be accomplished according to the schedule contained in Appendix C of the approved GSTP. The US EPA and OEPA will be notified two weeks before soil boring activities are scheduled to begin.

In general, sampling will be performed consistent with other investigative activities such as soil borings.

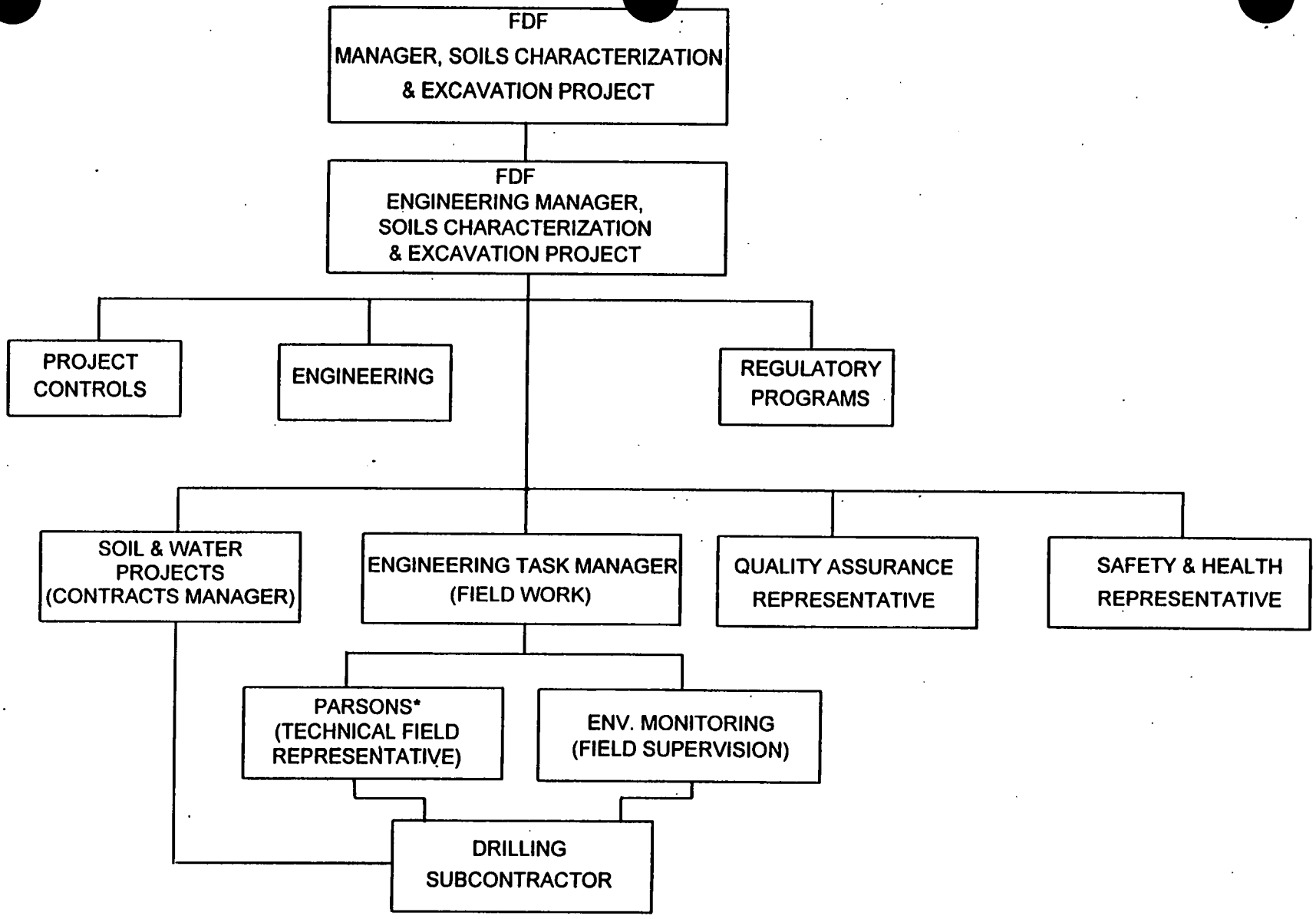

FIGURE 3-1
GEOTECHNICAL INVESTIGATION
ORGANIZATIONAL STRUCTURE

* Parsons is also responsible for laboratory testing

Section 4

4.0 HEALTH AND SAFETY

The most successful methodology for providing an effective health and safety program for any activity is to ensure that involved personnel have received adequate training prior to implementation of the fieldwork. Employee awareness of all physical, radiological, and chemical hazards which may be encountered will be accomplished by training throughout the planning and execution of this project.

All FDF and subcontractor personnel who will be performing fieldwork during this project will be required to have participated in all Occupational Safety and Health Administration (OSHA)-mandated 1910.120 Hazardous Waste Site Worker training. In addition, all applicable annual refresher training will have been taken by the individuals.

DOE Order 5700.6C (Quality Assurance) requires a series of site-specific training courses for workers at the FEMP. These courses are designed to augment OSHA required training and provide additional training specific to the hazards which exist at the FEMP.

Field personnel participating in the performance of this project will be briefed on the requirements of the FEMP and Project Specific Health and Safety Plans, and the GSTP.

In summary, employee awareness and clearly delineated lines of authority and responsibility have been designed to provide for effective health and safety related knowledge specific to each activity.

4.1 GEOTECHNICAL SAMPLING AND TESTING PLAN

All aspects of this GSTP will be performed in accordance with all existing applicable U.S. DOE, U.S. EPA, OSHA, and State of Ohio health and safety regulations. Additionally, all practices will be managed in accordance with commonly accepted practices used in the hazardous waste industry.

A FEMP Work Permit will be obtained prior to performing any fieldwork. This FEMP Work Permit will either include or reference a Penetration Permit that must be issued for each sample location prior to drilling, trenching, or soil boring activities may begin. Before a Penetration Permit is obtained, the area of concern is investigated and compared against the site database for underground utilities in the area. No drilling, trenching or soil borings will be performed without a valid Penetration Permit being obtained prior to actual performance of the fieldwork.

Field activities require a health and safety plan. A health and safety plan has been prepared in accordance with the FEMP Site Health and Safety Plan. For each project task and subtask, health and safety technician coverage is provided by the assignment of a technician to monitor the activities of the field crew. Health and safety plans provide for the hazards typically encountered by personnel when performing the specified fieldwork.

Proper equipment to be used for health and safety monitoring and personnel protection will be specified in Attachment B of the Project Specific Health and Safety Plan (Personnel Environmental Monitoring Action Levels). Criteria for the selection of monitoring equipment and protective clothing will also be detailed in Attachment A of the Project Specific Health and Safety Plan (Health and Safety Requirements Matrix) and may be further augmented during the issuance of FEMP Work Permits.

Personnel associated with the task are required to read and understand the Project Specific Health and Safety Plan prior to either entering the immediate work zone or performing field work.

4.2 RADIOLOGICAL MONITORING AND CONTROL

Radiological monitoring for this work plan will be achieved using existing institutional controls commonly utilized at the FEMP. For those areas of the FEMP which are under existing institutional radiological controls, any employee who will be entering such areas is required to possess and wear a Thermoluminescent Dosimeter (TLD) to monitor for exposure to radiation. In addition, each employee is required to participate in a regularly scheduled urinalysis program which is designed to monitor for internal uranium contamination. In addition, each employee performing work in the former plant area or in any radiologically controlled area must attend and pass appropriate on-site radiological training.

Monitoring results, which exceed FEMP-determined exposure guidelines, will be further evaluated as to the possible source(s). Measures necessary to reduce personnel exposure to radiation will be implemented. Such measures may include, but are not limited to, personnel training, employee exposure monitoring, increased personnel monitoring, and the use of personnel protective equipment.

If the responsible radiological technician assigned to the field activities identifies a real or potential radiological condition which could result in an unsafe condition, then that person has the responsibility to cease field operations until such time as the unsafe condition has been corrected.

4.3 NON-RADIOLOGICAL MONITORING AND CONTROL

Monitoring of potential health and safety problems associated with non-radiological hazards are evaluated by a health and safety technician. Also, all field crews are responsible for hazard awareness and recognition. Task-specific training is designed to enhance the performance of all fieldwork using good and safe work practices.

Evaluating the potential for personnel exposure to organic contaminants will be achieved mainly through the use of a Photoionization Detector. Other equipment which could potentially be used include oxygen meters, and combustible gas indicators. Personal protective equipment (PPE) requirements for non-radiological hazards will be determined by FDF health and safety personnel prior to the execution of field activities.

If the responsible industrial hygiene technician assigned to the field activities identifies a real or potential condition which could result in an unsafe condition, then that person has the responsibility to cease field operations until such time as the unsafe condition has been corrected.

Section 5

5.0 QUALITY ASSURANCE AND QUALITY CONTROL

The primary objectives of the QA/QC sections of this plan relate to the collection of engineering/ geotechnical information needed to support the remedial design of the former plant area. Specific objectives of this field sampling effort will be designed, organized, and implemented in a manner which will optimize the collection of information which meets predetermined DQOs. To ensure that information is gathered in such a manner that DQOs are met, QC measures will be used to determine conformance with overall program objectives.

The fundamental mechanisms used to achieve these project quality goals can be categorized as prevention, assessment, and correction. These components are further described as follows:

- Prevention of defects in the data quality through planning and design, documented instructions and procedures, and careful selection and training of skilled, qualified personnel.
- Quality assessment through a program of regular audits and surveillances to supplement continual informal review.
- Permanent correction of conditions adverse to quality objectives through a close-looped corrective action system.

5.1 ACCURACY, PRECISION, AND SENSITIVITY

For the purposes of this GSTP, accuracy, precision, and sensitivity are defined as follows.

5.1.1 Accuracy and Precision

Accuracy is defined as degree of conformity to the true value, and is achieved by using recognized calibration standards. Precision is defined as the degree to which measurements of replicates agree to one another, being free from bias or drift in the measurement data.

Accurate and precise data will be achieved through the use of sampling and analysis procedures that minimize biases, through the use of standard procedures, through the meticulous calibration of field and testing equipment, and by implementing corrective action whenever measured accuracy and precision deviate from pre-established limits.

5.1.2 Sensitivity

Sensitivity is defined as the capability of indicating minute differences. Sensitivity of field and laboratory equipment and measurements will be in accordance with the relevant ASTM standard test methods and practices listed in Table 6-2.

5.2 DATA COMPLETENESS AND VERIFICATION

For the purposes of this GSTP data, completeness and verification are defined as follows.

5.2.1 Data Completeness

A sufficient number of successful measurements, at least 90 percent, should be obtained to characterize the extent and nature of soils within the former plant area.

5.2.2 Data Verification

After data is received, the data will be verified to be consistent with the requirements specified in the DQO and the GSTP, in accordance with Site Procedure ED-12-3002 (Collection, Verification, and Use of Engineering Data). All data calculations will be verified by an independent verifier, in accordance with Site Procedure ED-12-4005 (Calculation, Preparation, and Review Process). The A-E will control and verify calculations based on the A-E's internal procedures.

5.3 TRAINING

All FEMP employees and subcontractors assigned to this project will be required to participate in a series of regularly scheduled training sessions designed to enhance employee awareness of individual responsibilities and duties in the project. Field staff will receive comprehensive project and task specific training. Daily project "Tailgate Safety Meetings" will augment health and safety and project objectives training conducted prior to the project start. Refer to Section 4.4 of the SCQ for additional details.

5.4 FIELD DATA PACKAGE VALIDATION

Data validation will be performed by the FDF Environmental Monitoring Department on all field data packages.

5.5 PERFORMANCE AND SYSTEM AUDITS

To verify compliance with the SCQ and project-specific requirements, the FEMP project manager and designated FEMP QA organization shall be responsible for scheduling and conducting QA audits and

surveillances. Audit results of activities covered by the SCQ are available to the EPA upon request to DOE-FN. EPA may conduct external audits of FEMP activities covered by the 1991 Amended Consent Agreement, as required.

As a minimum, FDF audits shall consist of evaluation of project QA program and procedures, effectiveness of implementation, and review of associated project documentation. Audits shall cover applicable laboratory activities, field operations and documentation, and final reports. Auditing shall be performed in accordance with DOE guidelines, the SCQ and applicable GSTPs.

Planned QA oversight of Parsons and Geotechnical subcontractor testing will be conducted by FEMP QA.

As a minimum, surveillance shall consist of monitoring/observing ongoing project activity and work areas to verify item and activity conformance to specified requirements. Surveillances shall be scheduled, planned, and documented. Refer to Section 12 of the SCQ for additional details.

5.6 CHANGES TO THE GSTP

Changes to the sampling and testing plan may be required during implementation of this geotechnical investigation. Any work performed that is not in accordance with the requirements identified in this GSTP must be documented and approved prior to implementation. There will be three levels of variance approval used for documenting and controlling changes to the scope of this investigation (minor variances, significant variances, and programmatic variances).

Variances considered as GSTP change pages to be incorporated into subsequent GSTP revisions.

Variances can be initiated by the Parson's Field Geologist, FDF Field Geologist, FDF Sampling Technician, FDF Task Manager, FDF Engineering Manager, or FDF Project Manager. Any changes which could significantly affect the remedial design will be discussed with the agencies prior to implementation.

5.6.1 Minor Changes

Minor Variances will be made primarily to document and authorize minor changes to the scope of the investigation. Minor variances will be documented on the Variance Form (see Appendix D), will be marked in the appropriate box as a minor variance, and must be approved by the FDF Field Geologist

(field supervision) prior to implementation. All minor variances will be post-approved by the FDF Task Manager and FDF QA Representative to assure proper documentation. The only changes that may be documented and authorized as a minor variance are minor changes directly related to sampling/drilling activities, associated testing [not changing the total number of tests (per test type) being performed], boring location, and boring depth (not penetrating the GMA).

5.6.2 Significant Changes

Significant variances will be made to document and authorize changes to the scope of work that are significant in nature. Significant variances will be documented on a Variance Form (see Appendix D), will be marked in the appropriate box as a standard variance, and will require approval from the FDF Task Manager, the FDF Engineering Manager and the FDF QA representative prior to implementation.

5.6.3 Programmatic Changes

Programmatic variances will be made to document and authorize changes to the scope of work that are programmatic (large in scope). Programmatic variances will be documented on a Variance Form (see Appendix D), will be marked in the appropriate box as a programmatic variance, and will require approval from the FDF Task Manager, the FDF Engineering Manager, the FDF QA representative, and the FDF Project Manager prior to implementation.

FDF Engineering Document Control shall be responsible for keeping a project variance log and maintaining the original variances. The project variance log and original variances will become part of the overall permanent project file. Engineering Document Control will distribute variances to the appropriate project personnel.

5.6.4 SCQ Project Specific Application

Section 5.6 will be used for controlling and documenting changes to the GSTP. As such the following modifications to Section 15.4 (Variances) of the SCQ will be implemented for this geotechnical investigation in accordance with Section 3.3.2 of the SCQ:

- The FDF Field Geologist shall have approval authority for minor variances.
- The FDF Engineering Manager shall have approval authority for significant variances.
- The FDF Project Manager shall have approval authority for programmatic variances.
- Variances will be used to document permanent changes to the GSTP.

- FDF Engineering Document Control shall have the responsibility for maintaining the project variance log.

- Approval from the FDF Quality Assurance Representative will not be required prior to implementation of minor variances.

- Post-approvals from both the FDF Quality Assurance representative and the FDF Task Manager will be required on minor variances.

- Documentation of the intended time, date, and location of variance implementation and the time allotted for comments and resolution will not be required. Proper documentation of the approval date will be required on both the variance form and the variance log.

- Neither SCQ Form 4.1.1 nor SCQ Form 15-3 will be used to document or authorize variances or changes to the GSTP during this geotechnical investigation. The variance form located in Appendix D of this GSTP will be used during this geotechnical investigation to document and authorize variances and changes to the GSTP.

5.7 Non-Conformances

GSTP non-conformances are defined as project activities which have been completed, but are subsequently found not to have been performed in accordance to the GSTP. A non-conformance may have significant impact to the usability of field- or laboratory-derived investigation results. Resolution of a project non-conformance will be the responsibility of the Program Manager. The FDF Quality Assurance Representative will be responsible for documenting non-conformances in accordance with FDF site procedures.

Section 6

6.0 FIELD ACTIVITY GUIDELINES

6.1 FIELD ACTIVITY REQUIREMENTS

This section presents a generalized description of the field activities proposed to complete the Geotechnical Investigations of the former plant area. Field activities will consist of a geotechnical sampling of subsurface soils using auger techniques and retrieving archived samples from previous borings from locations and depths of investigative interest.

Procedures to be used during the performance of the field operations are derived from several FEMP program plans, procedures, ASTM guidance, and EPA sources. FEMP program plans, specifically the SCQ and FEMP department standard operating procedures will be used as guidance documents. US EPA procedures reference sources include the "Compendium of Superfund Field Operations Methods" and "Hazardous Waste Site Disposal Operations." Guidance for field activities is presented in Section 6.2 below.

For certain sampling and drilling operations that are not governed by any ASTM standards, specialized methodologies will be incorporated into the drilling subcontractor's scope of work. These methodologies will be in accordance with commonly accepted investigative techniques and recognized industrial practices.

A methodology for denison sampling (see Appendix F) will be used where the collection of non-disturbed samples is required in high-resistance soils, i.e., soils containing rocks or gravel, that commonly damage shelby tubes. Shelby tubes are the sampling devices normally used to collect subsurface non-disturbed soil samples.

A methodology for using hollow-stem augers as a temporary casing in zones of subsurface uranium contamination (see Appendix H) will be used when drilling through a uranium-contaminated zone into a non-uranium contaminated zone where a potential pathway could be created from one perched groundwater zone to another and where subsurface contamination is greater than three feet in depth.

Pursuant to 36 CFR 800.13, a Programmatic Agreement was signed and approved by the Advisory Council on Historic Preservation on March 6, 1997, which exempts the former plant area from any

archaeological investigative activity except for the case of unexpected discovery of cultural resources. Appendix E outlines this procedure for Unexpected Discovery of Cultural Resources in greater detail.

6.2 FIELD OPERATIONS PROCEDURES

Tables 6-1 and 6-2 provide references for administrative, field, and sample handling/laboratory procedures for various soil sampling activities in the geotechnical investigation of the former plant area.

TABLE 6-1
SOIL SAMPLING AND TESTING REFERENCE GUIDELINES

Administrative Procedures	Reference Documents
QA/QC	SCQ Sections 4, 5, 10, and 11; Appendix A/Table 2-2; Appendix D; Appendix J
Chain of Custody	SCQ Volume I, Section 7.1; RI/FS Fernald Project Policy and Procedures Manual, FPP-401, Section 5.1.12
Corrective Action	SCQ Volume I, Section 15.2; RI/FS Fernald Project Policy and Procedures Manual, FPP-210
Daily Logs	SCQ Appendix J, Subsection J.4.1
Document Change Request	SCQ Volume I, Section 4.4.3.2; RI/FS Fernald Project Policy and Procedures Manual, FPP-200

Field Procedures	Reference Documents
General Drilling Practices	SCQ Section 5.2.1; Appendix J, Subsection J.4.2
Subsurface Sampling	SCQ Appendix K, Section K.5.3
Surface Sampling	SCQ Appendix K, Section K.5.1
Abandonment	ASTM D5299-42 "Standard Guide for Decommissioning of Groundwater Wells, Vadose Zone Monitoring Devices, Boreholes and Other Devices for Environmental Activities" OAC 3745-9-10 "Abandonment of Test Holes and Wells" ASTM C150-92 "Standard Specification for Portland Cement"
Field Screening of Samples for Radioactive Contamination	SCQ Appendix K, Subsection K.5.3.2; RI/FS Fernald Project Policy and Procedures Manual, FPP-600
Decontamination	SCQ Appendix K, Subsection K.11

Sample Handling/ Laboratory Procedures	Reference Documents
Classification, Transportation, and Shipment of FEMP RI/FS Samples	RI/FS Fernald Project Policy and Procedures Manual, FPP-601; SCQ Appendix K, Subsection K.10; Volume I, Subsection 6.7; Compendium of Superfund Field Operations Methods, Section 6.0
Geotechnical Sampling and Testing Methods	ASTM reference standards as shown in Table 6-2 (see Appendix I for copies of ASTM reference standards)

TABLE 6-2

SUMMARY OF ASTM PROCEDURES

Test No.	Title
D 420	Standard Guide for Investigating and Sampling Soil and Rock
D 421	Standard Practice for Dry Preparation of Soil Samples for Particle-Size Analysis Determination of Soil Constants
D 422	Standard Test Method for Particle Size Analysis for Soils
D 698	Test Method for Laboratory Compaction Characteristics of Soil Using Standard Effort
D 854	Standard Test Method for Specific Gravity of Soils
D 1452	Standard Practice for Soil Investigation and Sampling by Auger Borings
D 1586	Standard Test Method for Penetration Test and Split-Barrel Sampling of Soils
D 1587	Standard Practice for Thin-Walled Tube Sampling of Soils
D 2166	Standard Test Method for Unconfined Compressive Strength of Cohesive Soil
D 2216	Standard Test Methods for Laboratory Determination of Water (Moisture) Content of Soil and Rock
D 2217	Standard Practice for Wet Preparation of Soil Samples for Particle-Size Analysis and Determination of Soil Constants
D 2434	Standard Test Method for Permeability of Granular Soils (Constant Head)
D 2487	Standard Classification of Soils for Engineering Purposes (Unified Soil Classification System)
D 2488	Standard Practice for Description and Identification of Soils (Visual-Manual Procedure)
D 3080	Standard Test Method for Direct Shear Test of Soils Under Consolidated Drained Conditions
D 3550	Standard Practice for Ring-Lines Barrel Sampling of Soils
D 4220	Standard Practices for Preserving and Transporting Soil Samples
D 4318	Standard Test Method for Liquid Limit, Plastic Limit, and Plasticity Index of Soils
D 4767	Standard Test Method for Consolidated-Undrained Triaxial Compressive Test on Cohesive Soils
D 5084	Standard Test Method for Measurement of Hydraulic Conductivity of Saturated Porous Materials Using a Flexible Wall
D 5299	Standard Guide for Decommissioning of Ground Water Wells, Vadose Zone Monitoring Devices, Boreholes, and Other Devices for Environmental Activities

Section 7

7.0 FIELD SAMPLING AND TESTING PLAN

7.1 GENERAL

The information generated by this geotechnical investigation is necessary in determining the geotechnical properties of the soils within the former plant area. This information is necessary for open excavation and dewatering design, including the evaluation of slope stability of the open excavations.

As part of this geotechnical investigation, sampling will be conducted to determine the geotechnical properties of soils within planned areas of excavation. Additionally, classification testing of archive samples will be performed. Three different areas of excavation in the former plant area are currently planned for determining geotechnical engineering properties: Area 3, Areas 4A and B, and Area 5 (Figure 1-2). The sample collection methods, field and analytical methods, procedures, and types of geotechnical sampling/testing will be specified in this section of the GSTP.

Changes to the sampling plan made in the field to conform with sampling and geological conditions will be documented in accordance with Section 5.5 of the GSTP. Sampling locations may be initiated in the field by the A-E to reflect encountered conditions.

Borings will be made using truck-mounted hollow-stem auger drill rigs. Geotechnical testing of samples will be conducted at the on-site laboratory, and at an off-site geotechnical laboratory licensed by the Nuclear Regulatory Commission.

7.2 FORMER PLANT AREA FIELD PROGRAM

7.2.1 Purpose

The purpose for the geotechnical investigation at planned excavation sites within the former plant area is to characterize and define the geotechnical properties of the coarse- and fine-grained materials for use in design and evaluation of excavation, dewatering, grading, and site restoration for the area.

In general, the laboratory testing of soil samples are intended to provide strength, permeability and density properties of the soil materials encountered during excavation within the former plant area. For purposes of individual tests, see Section 2. Classification tests of coarse-grained soils (primarily sands) within the glacial till are planned to provide data to evaluate the properties and extent of water

bearing zones. Additionally, some undisturbed samples are also planned for strength testing to provide basis for recommendations and short term performance evaluation of open excavated slopes.

7.2.2 Soil Borings

Truck-mounted hollow-stem auger drill rigs will be used to drill 10 geotechnical soil borings within the former plant area (see Figure 7-1). Split-spoon, Shelby tube, Piston, Denison or ring-lined samplers will be used to collect soil samples from the 10 borings (see Appendix F for Denison Sampling Method).

Penetration/resistance testing (Standard Penetration Test) performed in the field will be used to correlate strength and consistency (or density) of soil. Geotechnical testing required to determine soil classification, moisture content, strength and permeability will be performed on samples obtained from the test borings.

Continuous sampling will be conducted in advance of the hollow-stem auger described above, from approximately six inches below surface to planned total depth. A Parson's geologist/engineer will describe the soil in accordance with ASTM D 2488, as appropriate, and record classifications on the lithologic log (see Appendix D). A FDF geologist/engineer will direct the drill rig operator throughout drilling operations and record activities on a Field Activity Log (see Appendix D). All samples will be field screened with beta/gamma detectors (for radionuclides) and photoionization detectors (for organisms) and their values recorded.

Planned boring depths, type and depth of samples, and corresponding geotechnical testing required for each sample are identified in Table 7-1. Samples will be collected approximately at intervals of every two feet in depth. Spilt spoon samplers shall be used to collect disturbed samples. Shelby tubes shall be used to collect undisturbed samples in accordance with Table 7-1. Denison samplers may be substituted in place of Shelby tubes for the collection of undisturbed samples in soils having a standard penetration resistance higher than 20 blows/foot or at the recommendation of the FDF geologist/ engineer. A Piston sampler may be used to recover samples of saturated silts or soft cohesive soils. A ring-lined sampler may be used to recover samples of coarse grained soils. Based on conditions encountered, the field geologist/engineer may use a three-inch split spoon sampler in lieu of the standard two-inch sampler for recovery of coarse grained soils for laboratory tests. A summary of geotechnical laboratory testing related to the 10 soil borings is summarized in Table 7-2. Preservation methods, sample volumes, and container types are listed in Table 7-3.

Thin-walled Shelby tube samples and Denison samplers will be shipped "upright" in 55 or 85-gallon drums. The sample tubes will be packed with vermiculite or similar packing material. Denison sample tubes will be overpacked prior to being placed in the shipment drum. All applicable shipping requirements, including chain of custody, will be followed. Ring-lined samples will be shipped in containers provided with the sampler.

After drilling and sampling is completed at each sample location, water level measurements will be taken and the boring will be plugged with a volclay grout from the bottom to surface. Plugging will be performed through the hollow stem auger or via a tremie pipe; after grout has hydrated, a minimum of a 12-inch cement plug will be placed in the hole. A Well Completion Log (Appendix D) will be completed.

The depths of the borings are planned to not extend into the Great Miami Aquifer. In order to avoid underground utilities, the exact location of the boring will depend on the penetration permit issued by FDF. Coring through concrete or asphalt pavement at land surface may be required to provide access to underlying soils.

Any clarification of work scope will be requested on a Clarification Request Form (see Appendix D).

7.2.3 Waste Handling/Disposal

During drilling activities within the former plant area, drill cuttings will be collected on plastic sheeting near the borings as they come to the surface from the auger rigs. Drill cuttings will be radiologically and chemically field screened during drilling in accordance with the project specific health and safety plan. The drill cuttings will be placed in drums provided by FDF at the work site by the drilling subcontractor. The driller will also be responsible for closing the drums when full, and marking the drums for temporary identification as required by FDF. FDF will identify to the driller work site locations desired for temporary storage of the drums. FDF will be responsible for the final disposition of the drummed cuttings, including labeling and transport to approved storage areas.

Investigation derived wastewater, generated from the decontamination of drilling and sampling equipment, will be handled in accordance with the OEPA-approved Policy for Management of Aqueous Investigation Derived Waste.

7.2.4 Equipment Monitoring/Decontamination

7.2.4.1 Radiological Monitoring

Based on subsurface radiological conditions within the investigation area, a Radiological Control Technician shall be assigned to monitor sampled materials and equipment during drilling/sampling activities. Based on 10 CFR 835 requirements for Department of Energy Facilities, action levels have been established for loose radiological contamination that designate when a work area will be upgraded from a Controlled Area to a Radiological Area.

All drilling/sampling activities governed by this investigation will be performed in either a Controlled or Radiological Area. No drilling activities are planned to be performed in Non-Controlled Areas.

See the glossary of Site Procedure RM-0020 (Radiological Control Requirements Manual) for definitions of the different types of radiological control areas (radiological, controlled, and non-controlled areas).

7.2.4.2 Subsurface Sampling Equipment

All sampling equipment penetrating the ground within the Former Plant Area and equipment that directly contacts subsurface material (including drill cuttings) will be decontaminated in accordance with Level II decontamination requirements, as specified in Appendix K of the SCQ prior to being moved between boring locations [see Section K.11.3.1 of the SCQ (Appendix K)]. Level II decontamination on sampling equipment will be performed at the site Decontamination Facility or within the immediate work area. Split spoon samplers shall be decontaminated to SCQ Level II decontamination requirements between each use. It is not necessary for the equipment to be dry following decontamination prior to reuse.

Shelby tubes, Denison sampler liners, and sample rings will be excluded from this decontamination requirements, since they will be used to contain undisturbed subsurface sample material during transportation to the geotechnical laboratory.

7.2.4.3 Controlled Area Investigative Work

If any subsurface contaminated material is encountered during drilling/sampling activities that exceeds the established limits for loose radiological contamination, then the Radiological Control Technician will stop all investigative work at that boring location until a Temporary Radiological Area can be

established. When establishing a Temporary Radiological Area, all equipment will be placed in a safe condition prior to actual work stoppage.

Monitoring of drill rigs and other project vehicles will not be required when relocating between two borings where both boring locations and the traveled route are within a continuous Controlled Area. Section K.11.3.4 of the SCQ specifically exempts decontamination of drill rigs if the rig is to remain in the same Operable Unit area.

Drill rigs and other project vehicles will be driven to each boring location within the Former Plant Area along routes directed by FDF in order to minimize the potential of contaminating equipment tires.

7.2.4.4 Entering a Controlled Area from a Radiological Area

Prior to entering a Controlled Area from a Radiological Area, a Radiological Control Technician will monitor project vehicles (including drill rigs) for radiological contamination and gross amounts of mud. If a project vehicle exhibits radiological levels above the limits listed in either Appendix D of Site Procedure RM-0020, or in the FDF Radiological Control Manual, or if gross amounts of dirt or mud exist on the vehicle, then the vehicle will be decontaminated to SCQ Appendix K Level I decontamination requirements. If decontamination cannot occur at the exit location, then the contaminated portions of the vehicle will be contained in plastic (if practical and as necessary) and the vehicle will be transported to the site Decontamination Facility for decontamination, as directed by the Radiological Control Technician.

It is not necessary to contain water during decontamination performed within a Radiological Area.

7.2.4.5 Entering a Non-Controlled Area from a Controlled Area

Prior to entering a Non-Controlled Area from a Controlled Area, a Radiological Control Technician will monitor project vehicles for radiological contamination and gross amounts of mud. If a project vehicle exhibits radiological levels above the limits listed in either Appendix D of Site Procedure RM-0020, or in the FDF Radiological Control Manual, or if gross amounts of dirt or mud exist on the vehicle, then the vehicle will be decontaminated to SCQ Appendix K Level I decontamination requirements. If decontamination cannot occur at the exit location, then the contaminated portions of the vehicle will be contained in plastic (if practical and as necessary) and the vehicle will be transported to the site Decontamination Facility for decontamination, as directed by the Radiological Control Technician.

7.2.4.6 Entering a Radiological Area from a Controlled Area

No monitoring of project vehicles will be required when entering a Radiological Area from a Controlled Area.

7.2.4.7 Radiological Area/Non-Controlled Area

During this geotechnical investigation, project vehicles will not be allowed to go directly between a Radiological Area and a Non-Controlled Area, but must interface through a Controlled Area.

7.2.5 PPE Requirements

All work performed within the Former Plant Area shall be performed in PPE as required by the Project Specific Health and Safety Plan (refer to Section 4.1 of this GSTP for further discussion).

7.3 ARCHIVE SAMPLE TESTING PROGRAM FOR FORMER PLANT AREA

7.3.1 Purpose

The purpose for testing archive samples of FEMP soils is to provide data to evaluate the hydraulic characteristics of the coarse-grained sand and water bearing silt deposits within the glacial till at, and in the vicinity of the planned excavation sites. The geotechnical laboratory tests to be performed on selected archive samples of sands and water bearing silts are grain size and plasticity tests. The permeability of the coarse grain deposits can be evaluated using results of these tests. Using samples from the FEMP archive allows for a spatial distribution of testing without the need for several new borings.

7.3.2 Archive Sample Test Plan

Figure 7-2 shows the locations of archive samples to be tested. Appendix K provides a test matrix for the archive test program. The tests to be performed are classification tests: grain-size (ASTM D 422) and plasticity tests (ASTM D 4318). Where possible, samples from within the same geological unit (e.g., sand lens) were grouped together to provide a larger sample volume for the grain size tests. Atterberg limits tests will be performed on coarse-grained samples with 25 percent fine content (defined as the percent passing the No. 200 sieve). These classification tests will be performed at the on-site laboratory by geotechnical laboratory technicians. Table 7-4 provides an estimate of the number of tests to be performed on archived samples. Table 7-5 provides a summary of the entire geotechnical testing program including tests performed on archived samples and samples from the 10 soil borings.

7.4 PROJECT SURVEYING

Land surveying will be performed at all on-site drilling locations using the 1983 NAD coordinate system. Surveying results will be approved and certified by a State of Ohio Registered Professional Land Surveyor. All surveyed locations will be accurate to the nearest 0.01 feet elevation accuracy. Survey points will be located to within 0.5 feet horizontal accuracy and integrated into the existing FEMP Geographic Information System (GIS), and incorporated into the site Geotechnical Database developed by Parsons and into the Sitewide Environmental Database (SED).

7.5 GENERAL SAMPLING REQUIREMENTS

7.5.1 Field QC Samples

Since no environmental samples will be taken, field QC samples will not be collected during the Geotechnical Investigation. The rationale for this selection is as follows:

- No duplicate soil samples will be collected due to the lack of an effective field composite technique which would produce meaningful data where discrepancies are considered a laboratory precision problem.
- Container blanks will not be collected because containers used for sampling activities are pre-cleaned by the manufacturer and have a certificate of analysis for each lot of containers.

7.5.2 Sample Equipment and Materials

All environmental media samples will be collected with equipment which is functional, designed for the specific purposes of the sampling event, and properly decontaminated. Sampling will be accomplished with equipment which is constructed of nonreactive materials.

Sampling containers will be composed of materials which are commonly used for the type of media to be sampled. All sample containers will be of the volume necessary for laboratory analysis purposes.

7.5.3 Sample Volume, Containers, and Preservation

Sample containers will be pre-cleaned by the manufacturer and will be accompanied by a certificate of analysis. The sample container types and preservative requirements are specified in the FEMP SCQ and are summarized in Tables 7-3. Sample volumes will be consistent with the contract laboratory requirements.

7.5.4 Sample Collection Documentation

The collection of soil and subsoil materials are documented on the following forms:

- Sample Collection Log
- Field Activity Log
- Lithologic Log
- Chain of Custody/Request for Analysis Record
- Chain of Custody/Request for Analysis Change Request Form

Examples of these forms are shown in Appendix D.

A Sample Collection Log will be completed which summarizes all samples collected from a single borehole. A lithologic log will be completed for soil borings when appropriate. Furthermore, all field investigation work is documented in detail on a daily basis using the Field Activity Log (see Appendix D).

Any changes to the approved work plan will be approved in accordance with Section 5.6.

7.5.5 Sample Collection Reports

No specific sample collection field reports are proposed for this project. Rather, the information contained in the field forms specified in Section 7.5.5 of this report serve as the basis for documenting all significant aspects of the sample collection activities.

7.5.6 Data Management

Data management will be implemented so that information collected during the investigation will be properly managed following completion of field activities. As specified in Section 5.1 of the SCQ, sampling teams shall describe daily activities on Field Activity Logs (FALs) sufficient for the sampling team to reconstruct a particular situation without reliance on memory. Sample Collection Logs shall be completed according to instructions specified in Appendix B of the SCQ. To assure proper documentation has been completed during field activities and that documentation has been completed correctly, field documentation shall be validated as described in Section D.5 of the SCQ.

Geotechnical and testing data will be verified by soil characterization and excavation personnel and by Parsons personnel. Laboratory data and field documentation will be entered into the SED. Hard-copy documentation will be entered into the SED. Hard-copy documents are kept in permanent storage in

the project files. Electronic databases may also be permanently archived in a neutral ASCII file format.

Copies of all field data packages will be forwarded to soil characterization and excavation personnel upon completion of field records verification.

7.6 SAMPLE MANAGEMENT

7.6.1 Sample Identification and Labeling

A unique six-digit sample number will be assigned to each sample collected. Each sample container will also be affixed with a sample label containing, at a minimum, the information specified on Form 7-2, Appendix B of the SCQ.

7.6.2 Sample Chain of Custody Records and Field Data Documentation

Sample custody procedures as outlined in the SCQ will be observed throughout the sample handling process from field collection to shipment or delivery of the samples to the laboratory. The Chain of Custody/Request for Analysis form will be completed for all samples delivered to the on-site sample processing laboratory (see Appendix D). Any changes to the log will be submitted on a Chain of Custody/Request for Analysis Change Request Log (see Appendix D).

7.7 FIELD EQUIPMENT METHODS

7.7.1 Calibration of Field Equipment

Field equipment to be used during this investigation is divided into the categories of health and safety monitoring and field screening and monitoring. At a minimum, all equipment will be operated and calibrated according to the equipment manufacturer's specifications. All instruments are calibrated to manufacturers' specifications. Written logs of equipment calibration are maintained by the appropriate personnel in charge of performing the instrument calibrations.

7.7.2 Documentation of Calibration

Separate logbooks are kept for each type of instrumentation. The logbooks contain a history not only of the instrument calibration but also of any unusual or irregular problems noted during the use of that particular instrument. Two separate documents are used to record calibration of instruments. Appendix D contains examples of the calibration documentation.

The forms are labeled as follows:

- Instrument Calibration Log
- Field Activity Log

7.8 LABORATORY METHODS

Geotechnical testing performance requirements shall be used as guidelines for evaluating laboratory capability to provide specific analytical services to the FEMP. Audits shall be performed to verify laboratory performance using the performance evaluation sample results specified in Appendix E of the SCQ.

7.9 SAMPLE TESTING

Sample testing will be performed in accordance with the guidance and requirements contained in the this GSTP. This task consists of sample management; quality control; and data reduction and reporting. These subjects are discussed in detail in the SCQ. Geotechnical samples will not be validated but will comply with the standards referenced in Table 6-2.

All testing of samples taken from the former plant area shall be performed by a laboratory licensed by the Nuclear Regulatory Commission.

Sample management and control will be in accordance with this GSTP and Section 7 (*Analytical Laboratory Sample Custody*) of the SCQ. Sample custody will be maintained and documented from the time of collection through analysis. Appropriate records will be maintained in the chain-of-custody process for sample tracking and control during shipment.

Data reduction and reporting for each ASL will be in accordance with Section 2.3.3 (DQOs) of the SCQ. Numerical analysis, including manual calculations, mapping, and computer modeling, will be documented and subjected to peer review.

Once the samples are collected and sent to the appropriate laboratory for analysis, field information will be received to verify that all required field information is complete and accurate; the information will then be forwarded to Data Quality Management. The depths of the borings are planned to not extend into the Great Miami Aquifer. In order to avoid underground utilities, the exact location of the boring will depend on the penetration permit issued by FDF. Coring through concrete or asphalt

pavement at land surface may be required to provide access to underlying soils. Field records generated for ASL E analyses will be forwarded to QA as a second level of field records verification following review.

The laboratory will then analyze the samples per the requirements set forth in the GSTP. After the laboratory has analyzed the samples and verified that the quality of the data meets the requirements of the analytical method, and that all deliverables are included, the data will be delivered to Parsons' representatives to perform the following tasks:

- Verify that all required deliverables have been received.
- Verify that contract performance requirements have been met. These contract performance requirements will be identified in the GSTP.
- Enter data into the SED.
- Copy data packages and deliver them to Data Quality Management personnel. The original of the data packages will be stored in a secure location.
- Confirm with an initial screening that the appropriate information is present.
- Log the package into a tracking database.
- Ensure that all QC information required to qualify data is present with supporting documents which can impact qualification of data from the laboratory.

TABLE 7-1
GEOTECHNICAL LABORATORY TESTING PROGRAM FOR FORMER PLANT AREA (SOIL BORINGS)

Boring Number	Planned Depth(ft)	Soil Type	Approx. SPT Depth(ft)	Approx. Shelby Depth(ft)	Geotechnical Testing
G3-001	26	CG	2	--	--
		FG	4	--	MC
		FG	--	6	MC+GS+AL+UCS
		FG	8	--	MC
		FG/CG	10	--	MC+GS+AL
		FG	12	--	MC
		FG	--	14	MC+GS+AL+CU
		FG	16	--	MC
		CG(sand)	18	--	MC
		CG(sand)	20	--	MC+GS+AL
		CG(sand)	22	--	MC
		FG	24	--	MC
		FG	--	26	MC+GS+AL+UCS
G3-002	25	FG	2	--	MC
		CG(sand)	4	--	MC+GS+AL+DS+P_{ch}+CD
		CG(sand)	6	--	MC+GS+AL
		CG(sand)	8	--	MC+GS+AL
		CG(sand)	10	--	MC+GS+AL
		CG(sand)	12	--	MC+GS+AL
		FG	14	--	MC
		FG	--	16	MC+GS+AL+UCS
		FG	18	--	--
		FG	20	--	MC
		FG	22	--	MC
		FG	--	24	MC+GS+AL+UCS

TABLE 7-1
(Cont'd)

Boring Number	Planned Depth(ft)	Soil Type	Approx. SPT Depth(ft)	Approx. Shelby Depth(ft)	Geotechnical Testing
G3-002 (cont.)		CG	Drill Cuttings of Sand	--	SP+GS+AL
G3-003	25	FG/CG	2	--	MC
		FG	4	--	MC
		FG	--	6	MC+GS+AL+UCS
		CG(sand)	8	--	MC+GS+AL
		CG(sand)	10	--	MC
		FG	12	--	MC
		FG	--	14	MC+GS+AL+CU
		FG	16	--	MC
		FG	18	--	MC
		FG	20	--	MC
		FG	--	22	MC+GS+AL+UCS
		FG	24	--	MC
G3-004	30	FG	2	--	MC
		FG	4	--	MC
		FG	--	6	MC+GS+AL+UCS
		FG	8	--	MC
		CG(sand)	10	--	MC+GS+AL+DS+P_{ch}+CD
		CG(sand)	12	--	MC+GS+AL
		CG(sand)	14	--	MC+GS+AL
		FG/CG	16	--	MC+GS+AL
		CG	18	--	MC
		CG	20	--	--
		CG	22	--	MC+GS+AL
		CG	24	--	--
		FG	--	26	MC+GS+AL+CU
		FG	--	28	MC+GS+AL+UCS

TABLE 7-1
(Cont'd)

Boring Number	Planned Depth(ft)	Soil Type	Approx. SPT Depth(ft)	Approx. Shelby Depth(ft)	Geotechnical Testing
G3-004 (cont.)		CG	Drill Cuttings of Sand	--	GS+AL+SP
G3-005	30	FG	2	--	MC
		FG	--	4	MC+GS+AL+UCS
		CG(sand)	6	--	MC
		CG(sand)	8	--	MC
		CG(sand)	10	--	MC+GS+AL+DS+P_{ch}+CD
		CG(sand)	12	--	MC
		CG(sand)	14	--	MC+GS+AL
		CG(sand)	16	--	MC
		CG(sand)	18	--	MC+GS+AL
		CG(sand)	20	--	MC
		CG(sand)	22	--	MC+GS+AL
		FG	24	--	--
		FG	26	--	MC
		FG	--	28	MC+GS+AL+UCS
		CG	Drill Cuttings of Sand	--	GS+AL+SP
G3-006	28	FG	2	--	MC
		FG	4	--	MC
		FG	6	--	MC
		FG	--	8	MC+GS+AL+UCS
		FG(silt)	10	--	MC+GS+AL
		FG(silt)	12	--	MC
		CG(sand)	14	--	MC+GS+AL+DS+P_{ch}+CD
		CG(sand)	16	--	MC+GS+AL

75

TABLE 7-1
(Cont'd)

Boring Number	Planned Depth(ft)	Soil Type	Approx. SPT Depth(ft)	Approx. Shelby Depth(ft)	Geotechnical Testing
G3-006 (cont.)		CG(sand)	18	--	MC+GS+AL
		CG(sand)	20	--	MC
		CG(sand)	22	--	--
		CG(sand)	24	--	MC
		FG	--	26	MC+GS+AL+UCS
		CG	Drill Cuttings of Sand	--	GS+AL+SP
G3-007	28	FG	2	--	MC
		FG	4	--	MC
		FG/CG	6	--	MC
		FG/CG	--	8	MC+GS+AL+UCS
		FG/CG	10	--	MC
		FG/CG	12	--	MC+GS+AL
		FG/CG	14	--	MC
		FG/CG	16	--	MC+GS+AL
		FG/CG	18	--	MC
		FG	--	20	MC+GS+AL+CU
		FG	22	--	MC
		FG	24	--	--
		FG	26	--	--
		FG	--	28	MC+GS+AL+UCS
G3-008	26	CG	2	--	--
		FG	4	--	MC
		FG	--	6	MC+GS+AL+UCS
		CG(sand)	8	--	MC+GS+AL+DS+P_{ch}+CD
		CG(sand)	10	--	MC
		CG(sand)	12	--	MC+GS+AL

TABLE 7-1
(Cont'd)

Boring Number	Planned Depth(ft)	Soil Type	Approx. SPT Depth(ft)	Approx. Shelby Depth(ft)	Geotechnical Testing
G3-008 (cont.)		CG(sand)	14	--	MC
		FG/CG	16	--	MC
		FG/CG	18	--	MC
		FG/CG	--	20	MC+GS+AL+UCS
		FG/CG	22	--	--
		FG	24	--	MC
		CG	Drill Cuttings of Sand	--	GS+AL+SP
G3-009	20	FG	2	--	MC
		FG	4	--	MC
		FG	--	6	MC+GS+AL+UCS
		FG	8	--	MC
		FG	10	--	MC
		FG	--	12	MC+GS+AL+CU
		FG	14	--	MC
		FG	16	--	--
		FG	--	18	MC+GS+AL+UCS
G3-010	22	FG	2	--	MC
		FG	4	--	MC
		FG	--	6	MC+GS+AL+UCS
		FG/CG	8	--	MC+GS+AL
		FG/CG	10	--	MC+GS+AL
		FG/CG	--	12	MC+GS+AL+CU
		FG/CG	14	--	MC+GS+AL
		FG/CG	16	--	MC
		FG/CG	18	--	MC
		FG/CG	--	20	MC+GS+AL+UCS

77

TABLE 7-1
(Cont'd)

Notes:

1. The definitions of the geotechnical laboratory testing* are as follows:
   - MC = Moisture Content, ASTM D2216.
   - GS = Grain Size/Hydrometer, ASTM D422 (includes SG = Specific Gravity, ASTM D854).
   - AL = Atterberg Limits, ASTM D4318. For coarse-grained materials, perform Atterberg Limits tests only on those samples whose fines content (defined as the percent passing the No. 200 sieve) is at least 25 percent.
   - DS = Direct Shear, ASTM D3080, 3-point test, to be performed on composite samples of sand from split spoon samples within same sand unit, remolded to approximate in-situ density of the unit based on SPT blow count. Test may be performed on intact material extracted from Shelby tube, Denison tube, or ring sampler.
   - UCS = Unconfined Compressive Strength, ASTM D2166.
   - P_{ch} = Permeability (constant head), ASTM D5084 or ASTM D2434, sand sample remolded to approximate in situ density based on SPT blow count. Test may be performed on intact material extracted from Shelby tube, Denison tube or ring sampler. Perform ASTM D2434 if the materials qualify for this method (i.e., less than 10 percent passing the No. 200 sieve).
   - SP = Standard Proctor, ASTM D698.
   - CU = Consolidated Undrained Triaxial Compression with pore pressure measurements, ASTM D4767, undisturbed sample. Three samples to be used at three different confining pressures. If three samples are not available, perform a staged test on one sample.
   - CD = Consolidated Drained Triaxial Compression Test (ASTM D4767), modified for sand, at field water content, single-point test, to be performed on samples of sand from split spoon samples within the same sand unit, remolded to approximately in-situ density based on SPT blow count. Test may be performed on intact material extracted from Shelby tube, Denison tube or ring sampler.

   *For the purpose of each type of test, see Section 2.

2. In order to obtain more soil material, the SPT samples may be driven for a total length of 2 feet instead of 1.5 feet, if judged necessary and provided that the sampler is of adequate length.

3. In case of no sample recovery, the hole should be cleaned and new attempt should be made prior to advancing to the next sample level. Then the next sample level shall be adjusted to minimize any deviation from the above specified levels.

4. Soil Type:
   - FG = Fine-grained soil (clay, silt)
   - CG = Coarse-grained soil (sand, gravel)

TABLE 7-2
GEOTECHNICAL LABORATORY TESTING PROGRAM SUMMARY
SOIL BORING SAMPLES

Symbol used in Table 7-1	ASTM Test No.	Standard Test Method	Planned[1] Number of Tests
GS	D 422	Particle Size Analysis for Soils	59
SP	D 698	Laboratory Compaction Characteristics of Soil Using Standard Effort	5
UCS	D 2166	Unconfined Compressive Strength of Cohesive Soil	20
MC	D 2216	Laboratory Determination of Water (Moisture) Content of Soil and Rock	112
P_{ch}	D 2434	Permeability of Granular Soils (Constant Head)	5
CD	D 4767	Consolidated, Drained Compressive Strength of Cohesive Soils in Triaxial Compression	5
DS	D 3080	Direct Shear Test of Soils Under Consolidated Drained Conditions	5
AL	D 4318	Liquid Limit, Plastic Limit, and Plasticity Index of Soils	59
CU	D 4767	Consolidated, Undrained Triaxial Compressive Test on Cohesive Soils	6

[1]See Table 7-1 for details of planned tests

TABLE 7-3
SAMPLES VOLUME, CONTAINERS, AND PRESERVATION - SOIL SAMPLES

Parameter	Container	Preservation
Gross Alpha/Beta[1]	4 ounces	None
Specific Gravity, Moisture Content, Atterberg Limit, Grain Size/Hydrometer Analysis	1 x 500 ml (or 1000 ml) glass wide mouth or (1) 3 in. (O.D.) x 30 in. Shelby tube[2,3]	ASTM D 4220
Dry Unit Weight, Unconfined Compressive Strength, Undisturbed	(1) 3 in. (O.D.) x 30 in. Shelby tube[2]	ASTM D 4220
Undisturbed Consolidated Undrained Triaxial Compression, with pore pressure measurement	(1) 3 in. (O.D.) x 30 in. Shelby tube[2]	ASTM D 4220
Remolded Hydraulic Conductivity (sands), Remolded Direct Shear, Remolded Consolidated Drained Triaxial Compression (modified for sands)	1000 - 2000 ml (composited from several split spoon sample jars by laboratory)[3]	ASTM D 4220
Standard Proctor	10-gallons (90 kg) (field weight -- taken from auger cuttings)	ASTM D 4220

[1]Only required for soils collected within the restricted area fence of the FEMP or in areas of known contamination.
[2]ASTM D1587 Suitable Tube
[3]Tests may be performed on material extracted from Denison tube or ring samples.
O.D. = outside diameter.

TABLE 7-4
GEOTECHNICAL LABORATORY TESTING PROGRAM
ARCHIVE SAMPLES

Symbol used in Appendix K	ASTM Method	Test	Estimated[1] Number of Tests
GS	D 422	Standard Method for Particle Analysis of Soils	67[1]
AL	D 4318	Test Method for Liquid Limit, Plastic Limit and Plasticity Index of Soils	72[1]

[1]See Appendix K for details of planned tests

81

TABLE 7-5
SUMMARY OF GEOTECHNICAL TESTING
FORMER PLANT AREA
SOIL BORING AND ARCHIVED SAMPLES

Test	Former Plant Area Investigation (Proposed)
Moisture Content	112
Grain Size/Hydrometer	126
Atterberg Limits	131
Unconfined Compressive Strength	20
CD Triaxial	5
CU Triaxial	6
Hydraulic Conductivity (Coarse-Grained)	5
Proctor Test	5
Direct Shear Test	5

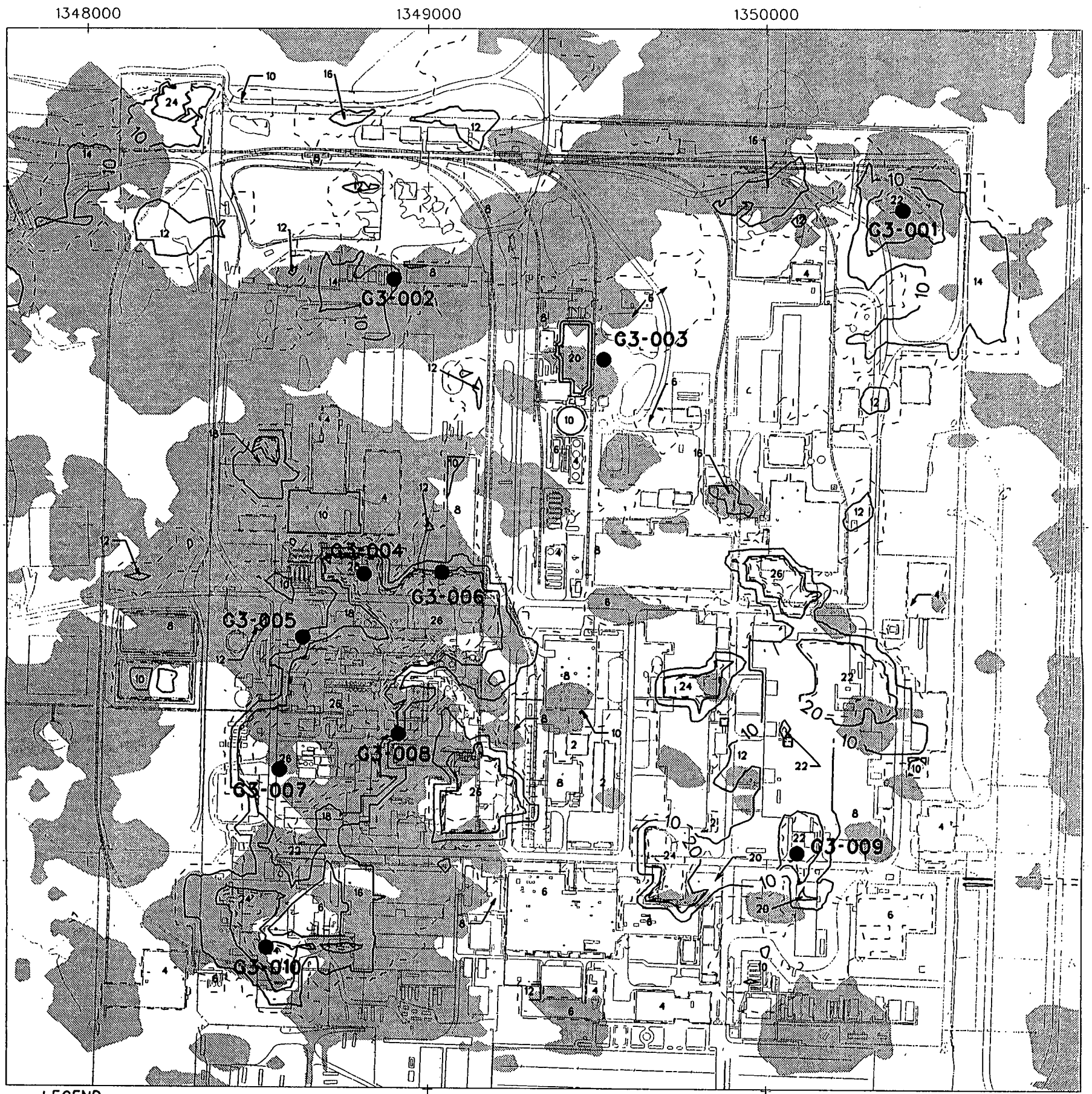

LEGEND

G3-010 PROPOSED BORING LOCATION

ESTIMATED EXCAVATION CONTOURS

22 (16) EXCAVATION DEPTHS

MODELED EXTENT OF COARSE-GRAINED MATERIAL

PROPOSED BORING LOCATION MAP - FORMER PLANT AREA

FIGURE 7-1

FILE: /USR/REF3/OU3/PO168/PO168/DGN/MAP/HOR/DPTH/PROP_BORE.DGN

prop_bore.m po165erma@ws415. Wed Feb 5 13:04:18 EST 1997

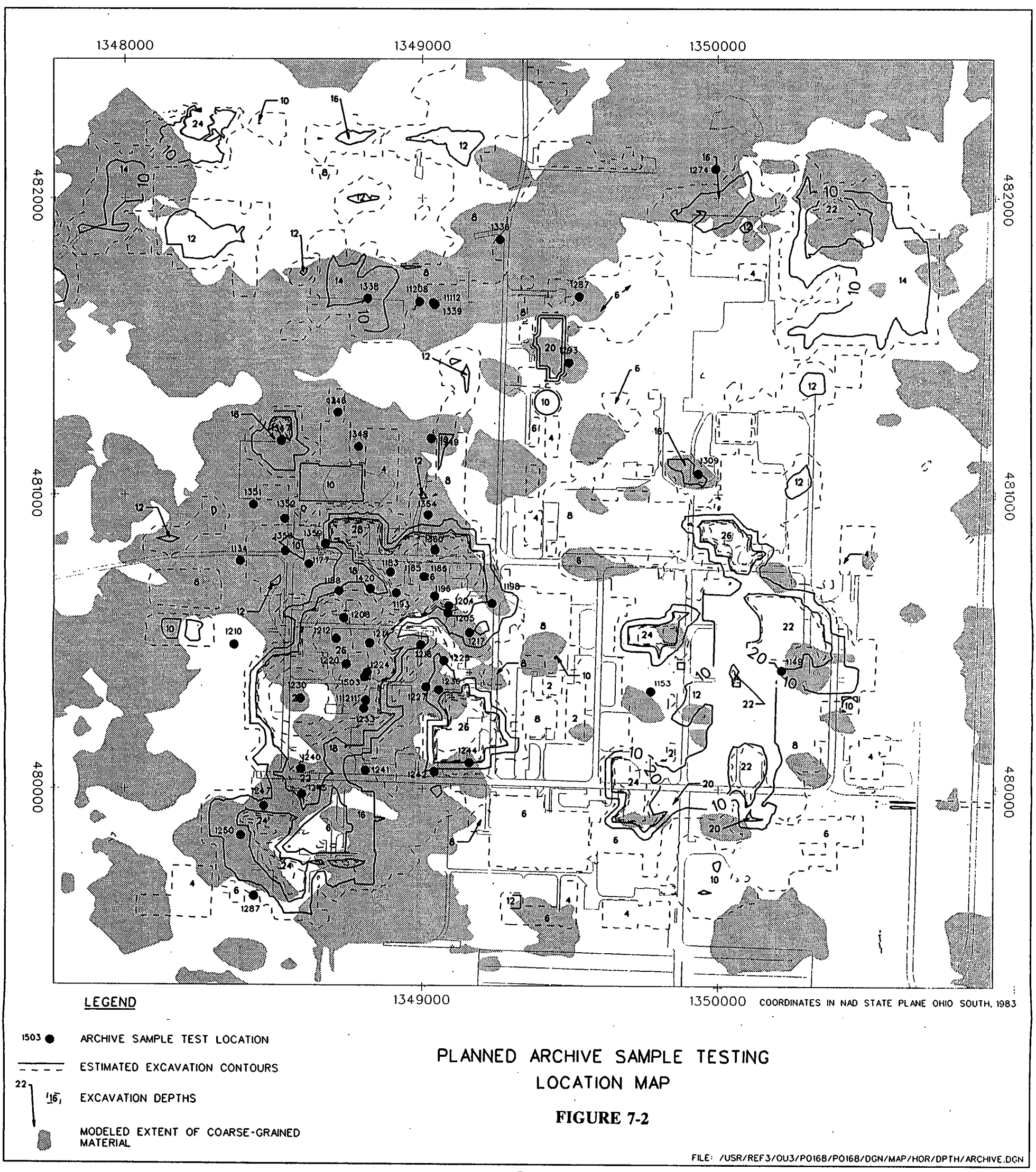

PLANNED ARCHIVE SAMPLE TESTING
LOCATION MAP

FIGURE 7-2

archive.m po165erma@ws415. Wed Feb 5 13:13:54 EST 1997

Appendix A

APPENDIX A

SITEWIDE EXTENT OF EXCAVATION

SOLID BLOCK MODELING

TABLE OF CONTENTS

A.1 Introduction A-1

A.2 Model Enhancements A-2

A.3 Modeling Methods A-3
A.3.1 Methodology A-3
A.3.2 Stratigraphy Model - Data Collection and Analysis A-3
A.3.3 Analytical Model A-4

A.4. Model Updates A-5

LIST OF ACRONYMS

CGM	Coarse-Grained Material
FEMP	Fernald Environmental Management Program
GMA	Great Miami Aquifer
OSDF	On-Site Disposal Facility
OU5 FS	Operable Unit 5 Feasibility Study
SEE	Sitewide Extent of Excavation

A.1 INTRODUCTION

The purpose of this plan is to present the proposed extent of excavation at the FEMP based upon enhanced three-dimension (3-D) modeling. This plan consists of the following figures:

- Excavation Plan + Building Foundations (see Figures 1-3 through 1-7)

  These figures present the basis for the excavation of soil depths in the Former Plant Area at the FEMP. These depths were determined based upon the results of the Sitewide Extent of Excavation (SEE) 3-D geologic and total uranium analytical model. This model incorporated all available FEMP lithologic data, total uranium soil data, and the excavation of all at-or-below-grade structures with the exception of the subgrade pipelines (these will be provided in future updates of this plan). All excavation depths are depicted below current topography.

- Stratographic Model Data Locations (see Figure A-1)

  This figure presents the locations of all lithology data points used in the geologic portion of the modeling. The geologic modeling forms part of the basis (along with new data presented in the Characterization Data Update) of the Excavation Plan and Building Foundation figure mentioned above.

- Sample Locations Not Used in OU5 FS Uranium Model (see Figure A-2)

  This figure presents the results and locations of total uranium data that was not included in the Operable Unit 5 FS analytical data model. A summary of this data is included in the Certification Data Update.

- Isopach-Base of Excavation to Base of Till (see Figure A-3)

  This figure is included due to its potential value in the development of Integrated Remedial Design Packages since it can aid in the determination of the sequence of excavation. Additionally, the figure will support the development of engineering controls that minimize further contamination of the Great Miami Aquifer.

- Depth of Cut and Fill, 1952 to 1992 (see Figure A-4)

  The figure "Depth of Cut and Fill, 1952 to 1992" was developed to show areas of the FEMP that were excavated (cut) to facilitate plant construction and the areas where fill material has been placed. Depths of excavation and thicknesses of fill were determined by digitizing the pre-plant (1952) topographic map and comparing it to the 1992 topography. This figure will be used in the development of Integrated Remedial Design Packages.

A.2 MODEL ENHANCEMENTS

The current definition of the geology of the glacial till in the plant area was used in the development of the SEE 3-D model. Similar to the Lithologic Model for the Pre-Design Investigation for the OSDF, all FEMP lithologic descriptions that were silty sand and coarser were designated as granular material, and lithological descriptions that were sandy silt and finer were designated as non-granular material. The granular material was incorporated into the model in 6-inch intervals or "picks" and a probablistic determination made by geo-kriging as to the extent of granular material.

Enhancements were also made to the Operable Unit 5 FS extent of contamination model to include all available FEMP soil analytical data. The additional data that was used in the SEE model was a result of sampling programs that were conducted after the Operable Unit 5 FS was completed, and the incorporation of additional RI/FS data.

The model presented in the Operable Unit 5 Feasibility Study (OU5 FS) was a geologically homogeneous model that was used to augment the OU5 remedy selection process. The model depicted the nature and extent of total uranium contamination in OU5 soils, which was used to estimate the extent of excavation, and approximate the volumes of OU5 soils that would be required to be excavated during the remedial alternatives being evaluated in the OU5 FS. However, the model used data kriging of total uranium analytical data only, no geologic data was incorporated. The model used for the OU5 FS was adequate for use in the screening of remedial alternatives.

The OU5 FS model indicated areas that will require excavation. Specific engineering considerations and projected construction conditions in areas to be excavated had not been considered. In order to provide a more realistic depiction of the actual conditions that should be expected below-grade at the FEMP, the lithologic data and analytical data had to be merged. The SEE 3-D model was generated to more accurately determine the engineering and construction considerations involved with the excavation of the heterogeneous FEMP soils and subgrade materials within Operable Unit 2, 3, and 5.

Merging the data allowed a more realistic evaluation of the extent of contamination and consideration of the heterogeneity of the plant area soils. To accomplish this, data from total uranium analyses were kriged separately in the sands and clays. This considers the uniqueness of the coarse and fine grained pathways. Excavations were then developed to envelope areas of known contamination and the at-and-below-grade building foundation removal.

A.3 MODELING METHODS

A.3.1 Methodology

Geostatistical techniques were used to estimate potential locations of coarse-grained material (CGM). The estimation variable used was a zero/one indicator derived from the classification of the input data points as Coarse-Grained Material (CGM) (1's) or not CGM (0's). This technique is called "indicator kriging".

Variogram models were developed to estimate variability in the input data by direction and distance. By examining the variability in several directions, anisotropic conditions can be estimated. The variogram models also serve as the primary controls for the kriging process. Kriging provides an estimate, or expected value, for the estimation variable at every node in the 3D model.

Based on the estimated locations of CGM, a second model was developed to estimate the concentration of total uranium within the till and CGM materials between the base of fill surface and the top of the Great Miami Aquifer (GMA). In this model, analytical results were classified as surface samples, or sub-surface samples from CGM or non-CGM soil. A kriged model was created for each of the three sample distributions, and the three models were combined to form an overall estimation model for total uranium in soils.

All geostatistical analyses and displays developed in this study were performed using software developed by Intergraph Corporation of Huntsville, Alabama.

A.3.2 Stratigraphy Model - Data Collection and Analysis

A digital terrain model of the current ground surface was developed from contours of the site taken from the 1992 flyover. A model of the base of fill material was estimated by using a map containing digitized contours of 1952 topography. A model of the top of the GMA from the OU5 FS was used to define the base of till material.

Sample intervals were coded according to the lithological type. There were two types of material considered: (1) "CGM", which included sand, gravel, sandy gravel, gravely sand, silty sand, clayey sand, silty sandy gravel, silty gravely sand, clayey sandy gravel, and clayey gravely sand, and (2) "clay", which included sandy silty clay, silty sandy clay, sandy clay, gravely clay, silt and clay.

Samples grouped in the "CGM" category were assigned a value of one. Other samples were assigned a value of zero.

To satisfy the support requirements for geostatistical analysis, samples were split into six inch intervals with X, Y, Z coordinates assigned as the center of each six inch interval. Samples or sample sub-intervals of less than three inches were removed.

A block model was defined to cover the production area with an additional buffer of about 250 feet in all four directions. The larger size ensured that data outside the production area, yet still close enough to have an impact on the modeling, were included in the analysis. The model location (NAD 1983) is as follows:

X(East)	:	1,347,250	to	1,351,250
Y(North)	:	478,800	to	482,800
Z(Elevation)	:	534.5 MSL	to	608.5 MSL

A grid spacing of 50 feet horizontal and one foot vertical was used, resulting in a model of just over 492,000 blocks.

The resulting kriging estimates were used to classify points in the model as CGM or non-CGM. Kriging estimates near zero indicate little likelihood of a point being CGM while estimates near one indicate high likelihood of a point being CGM. A statistical distribution of the model estimates was analyzed and a cutoff point of 0.27 was chosen to most closely match the statistical distribution of the original data set. Model locations with an estimated value above 0.27 were thereafter treated as CGM locations.

A.3.3 Analytical Model

Samples with total uranium analytical results and with a top depth less than five feet were extracted to a "surface soils" data set. Samples containing total uranium analytical results and with a bottom depth of greater than six inches were extracted to a "subsurface soils" data set. The subsurface data was further divided into CGM and non-CGM data according to two criteria, in order of precedence: (1) stratigraphic information from the borehole strip log over the sample interval, or (2) estimated CGM

coding from the position of the sample within the stratigraphic block model. For each data set created, the samples were split into six inch intervals in the same manner as for the stratigraphic data.

A block model was defined to cover the same area as the stratigraphic block model. Blocks in the model were coded as air, top one foot of soil, CGM soil below one foot, non-CGM soil below one foot, or GMA. The CGM/non-CGM designation was based on the estimates in the stratigraphic block model and using a cutoff value of 0.27.

Separate kriging runs were completed for each of the three data sets (surface, subsurface CGM, subsurface non-CGM). The total uranium estimates derived from the surface data were assigned to blocks coded as "top one foot of soil". Similarly, estimates derived from the CGM subsurface and non-CGM subsurface data sets were assigned to blocks with the appropriate soil coding. Points designated as air or GMA were not assigned a total uranium estimate.

A.4 MODEL UPDATES

One of the goals for implementing this geotechnical sampling and testing plan is to provide more accurate geotechnical information about the subsurface soil conditions within the former plant area. Another is that the Sitewide Extent of Excavation 3-D Model can be revised to more closely represent actual subsurface conditions and provide a more accurate output for remedial excavation.

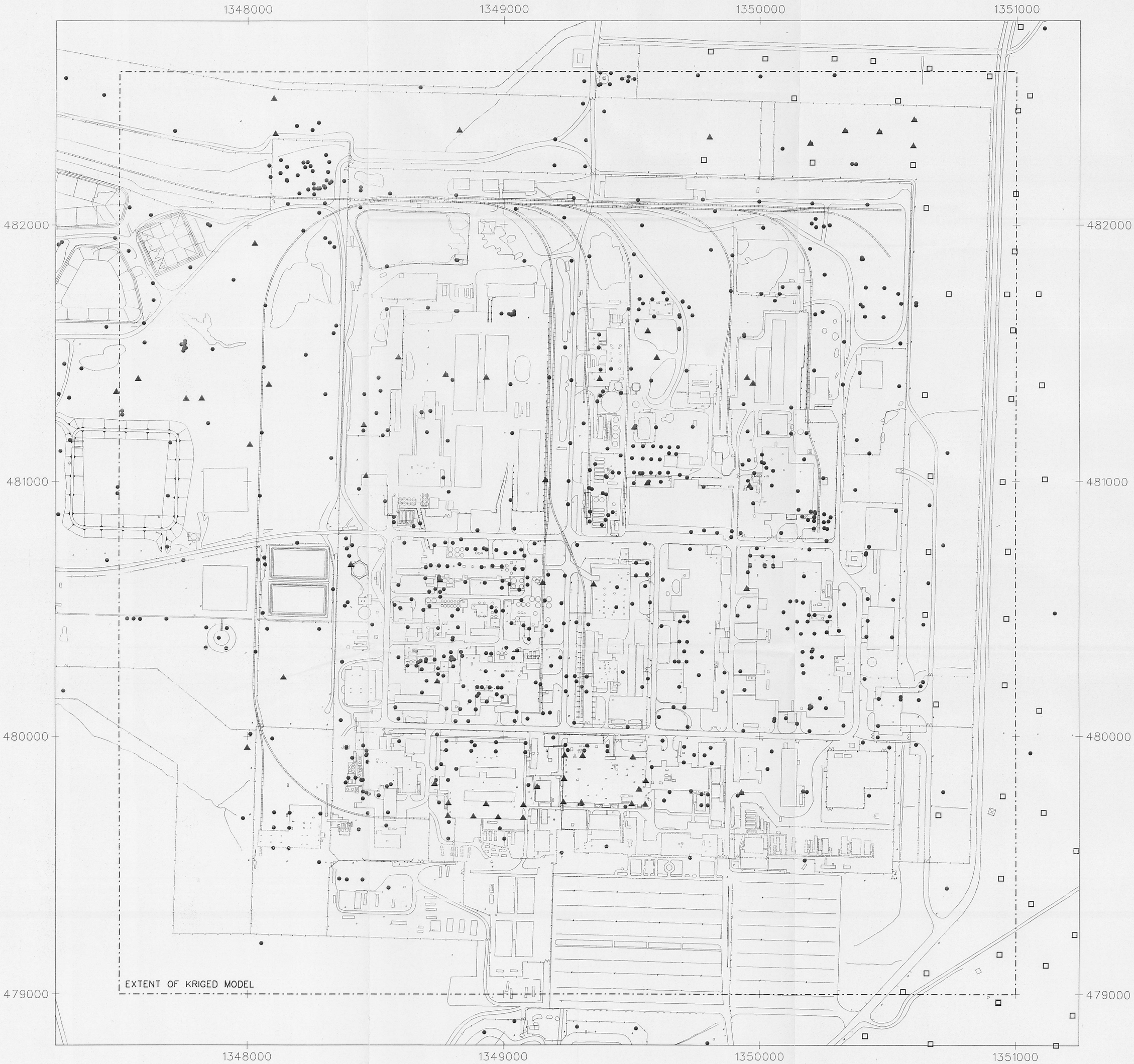

LEGEND

- ● RI/FS DATA LOCATIONS
- ▲ ADDITIONAL DATA LOCATIONS
- □ CONE PENETROMETER LOCATIONS

STRATIGRAPHIC MODEL DATA LOCATIONS

25-NOV-1996
5CRA4/DGN/MAP/HOR/DPTH/STRATDATA.DGN

Figure A-1

stratdata.m(669.betty) john@betty. Mon Nov 25 15:55:08 EST 1996

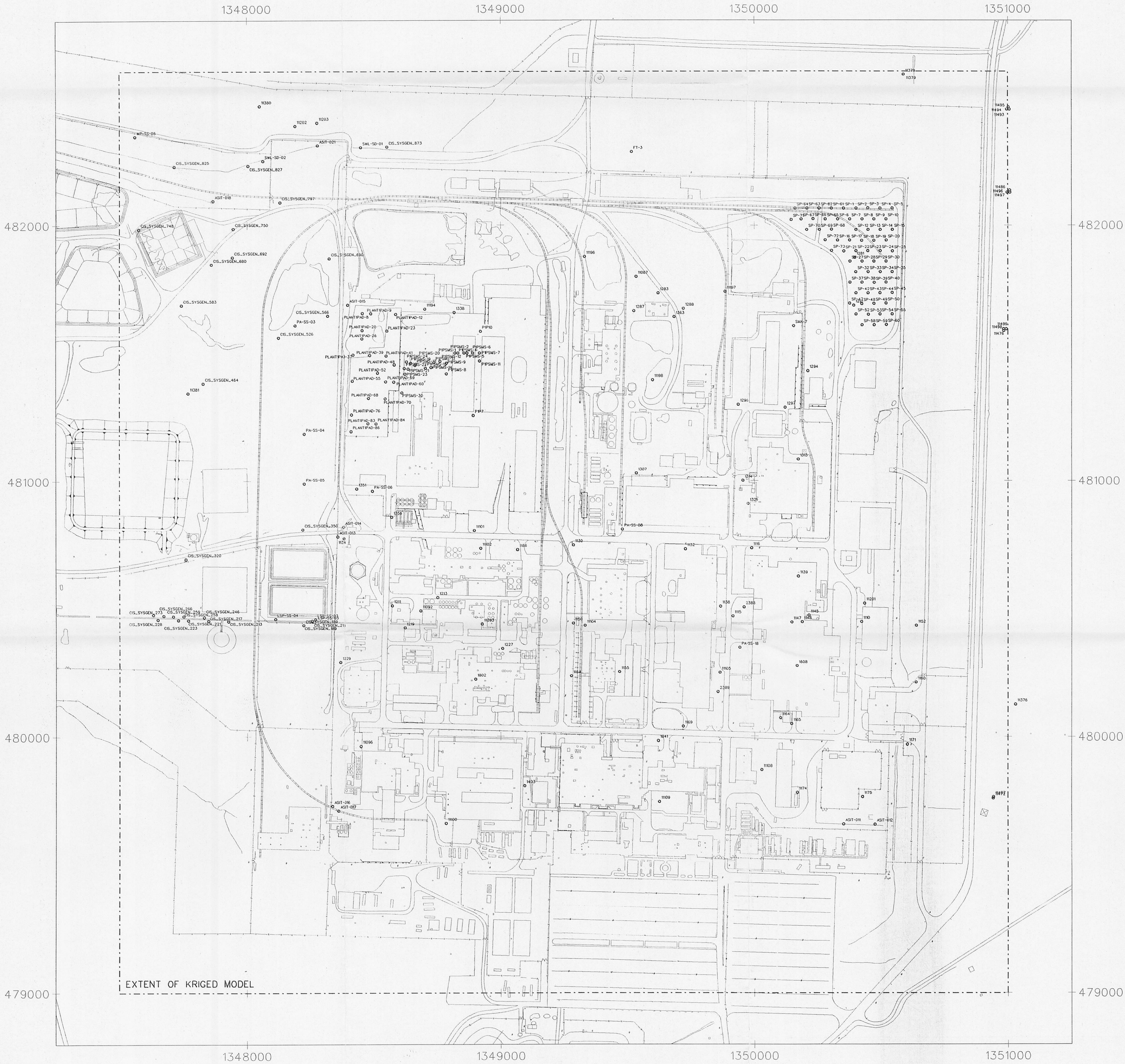

SAMPLE LOCATIONS NOT USED IN OU5 FS URANIUM MODEL

26-NOV-1996
5CRA4/DGN/OU5OMIT.DGN

Figure A-2

ISOPACH - BASE OF EXCAVATION (SCEP+BUILDINGS) TO BASE OF TILL
PRODUCTION AREA

25-NOV-1996
5CRA4/DGN/BOT_ISOP.DGN

Figure A-3

bot_isop.m(666.betty) john@betty. Mon Nov 25 13:57:52 EST 1996

FIGURE A-4. DEPTH OF CUT AND FILL, 1952 TO 1992

05-FEB-1997
5CRA4/DGN/CF_PRD.DGN

Appendix B

APPENDIX B

DATA QUALITY OBJECTIVES

Fernald Environmental Management Project

Data Quality Objectives

Title: Data Quality Objective Logic Flow For the Geotechnical Sampling and Testing Plan of the Former Plant Area

Number: GT-010

Revision: 1

Draft Date: February 20, 1997

Contact Name: Patrick Riley

Approval: Stephen T. Garland Date: 2/20/97
Project Manager (Steve Garland)

Approval: William D. Kelley Date: 2-20-97
DQO Coordinator (William D. Kelley)

Rev. #	0	1			
Date	1/22/97	2/20/97			

DATA QUALITY OBJECTIVE LOGIC FLOW
GEOTECHNICAL INVESTIGATION
FORMER PLANT AREA

Members of Data Quality Objectives (DQO) Scoping Team

The members of the scoping team included the manager of Soil Characterization, individuals with expertise in various in situ radiological methods, individuals with expertise in geotechnical methods, a field construction manager, a statistician, a risk assessor, and representatives from the Department of Energy - Fernald Office (DOE-FN).

1.0 Statement of Problem

Conceptual Model of the Site

According to the Operable Unit 5 Record of Decision, the preferred remedial alternative at the Fernald Environmental Management Project (FEMP) includes the removal and permanent disposition of contaminated materials to an appropriate on- or off-property disposal facility. To accompany this disposition of contaminated materials, an on-site disposal facility is being constructed near the eastern edge of the site. Waste acceptance criteria have been developed that establish maximum concentrations for certain contaminants that can be disposed in the On-Site Disposal Facility. Any contaminated materials (including soils) that exceed the waste acceptance criteria are to be disposed off-site. Contaminated materials meeting the waste acceptance criteria can be disposed in the On-Site Disposal Facility.

Final remediation levels have also been developed that establish the minimum concentrations for certain contaminants that require remedial action. Soil and sediment exceeding the final remediation levels are to be excavated and disposed in accordance with the waste acceptance criteria.

For purposes of sequencing soil remediation activities, the Remedial Design Work Plan for Remedial Actions at Operable Unit 5 (dated August 1996) divided the FEMP into seven major soil remediation areas and further divided Soil Remediation Areas 1 and 2 into subareas, known as Phases (see Figure 1-2 for approximate boundaries).

In support of the design of the excavation and remediation of the impacted soils at the FEMP, geotechnical investigations

are required to obtain engineering and geotechnical data on soils from the areas being remediated.

The factors influencing the proposed sequencing of soil excavation during remediation of these areas include:

- Remediating upgradient areas first, with respect to surface water and groundwater flow directions to minimize the potential for recontamination

- Remediating and certifying soil remediation areas on a priority basis so that surface and subsurface soils attain the final remediation levels to support the implementation schedules of other FEMP projects (e.g., excavating and certifying remaining soil in the On-Site Disposal Facility footprint prior to construction of the On-Site Disposal Facility)

- Implementing reasonable construction practices needed to complete remediation (e.g., proper side slopes for open excavations)

- Finalizing the remediation of an area subsequent to other associated remediation activities (e.g., soil remediation cannot be performed in the former plant area until the above-grade structures are dismantled)

- Complying with federal budget constraints.

2.0 Identify the Decision

The objective of this geotechnical sampling and testing plan is to obtain additional subsurface geotechnical data in order to support the final remedial design of the Fernald Environmental Management Project's (FEMP) Former Plant Area.

3.0 Inputs That Affect the Decision

To develop design parameters, and evaluate the geotechnical properties of soils within the Former Plant Area, these additional samples are needed in order to develop the required geotechnical data for design. The number of soil borings will provide sufficient information, when used in conjunction with existing information, to adequately determine geotechnical properties of the materials for the detailed design purposes.

The following table shows the additional tests to be performed on materials within the Former Plant Area:

SUMMARY OF ASTM PROCEDURES

ASTM METHOD	TEST
D422	Particle Size Analysis for Soils
D698	Laboratory Compaction Characteristics of Soil Using Standard Effort
D854	Standard Test Method for Specific Gravity of Soils
D1586	Standard Test Method for Penetrometer Test and Split-Barrel Sampling of Soils
D2166	Permeability of Granular Soils (Constant Head)
D2216	Standard Test Methods for Laboratory Determination of Water (Moisture) Content of Soil, Rock, and Soil-Aggregate Mixtures
D2434	Unconfined Compressive Strength of Cohesive Soil
D3080	Standard Test Method for Direct Shear Test of Soils Under Consolidated Drained Conditions
D4318	Test Method for Liquid Limit, Plastic Limit, and Plasticity Index of Soils
D4767	Test Method for Consolidated-Undrained Triaxial Compressive Test on Cohesive Soils
D5084	Standard Test Method for Measurement of Hydraulic Conductivity of Standard Porous Materials Using a Flexible Wall Parameter

4.0 Specification of the Domain of the Decision

The tests will be conducted upon samples collected from the Former Plant Area of the FEMP. Additionally, archived samples from selected areas of the Former Plant Area will also be analyzed.

5.0 Decision Rule

The result of the geotechnical sampling and testing will be summarized in the geotechnical investigation report. The information obtained from this investigation will assist the Soil Characterization and Excavation Project (SCEP) in detailed design of the excavation and remediation of the Former Plant Area. The primary objectives of the in-situ testing, and geotechnical sampling and testing are as follows:

- Develop a more precise three-dimensional excavation model for the Former Plant Area.
- Provide geotechnical properties and parameters for subsurface native granular soils for potential liquefaction evaluation of materials within the Former Plant Area for use in design of excavation, dewatering, grading and site restoration activities.

- Provide information regarding the hydraulic conductivity of the soils within the Former Plant Area.

- Report on any relevant geotechnical findings or observations made during execution of the work that may affect the geotechnical aspects of the design, construction and performance.

6.0 Limits on Decision Errors

The purpose of this step is to define possible decision errors based on study findings. A false positive error would indicate that the subsurface materials have properties more conducive for excavation. This would have an impact on design parameters. This could result from laboratory or analytical testing errors, misclassification of soil in the field or by missing a significant granular pathway during the field investigation. The consequences would be that a false positive would be discovered during excavation. This would result in a reduced factor of safety and delays in remediation.

A false negative would indicate that the subsurface materials have properties less conducive for excavation. This would have an impact on design parameters. This could result from laboratory or analytical testing errors, misclassification of soil in the field during the field investigation. The consequences would be that a false negative would be discovered during excavation. This would result in an unnecessary design upgrade.

A false positive result is the more unfavorable condition

True State of Nature for the Decision Errors

The true state of nature for Decision Error 1 is that the error in measurements will not exceed the requirements of the project
The true state of nature for Decision Error 2 is that the error in measurements exceeds the requirements of the project

Null Hypothesis

H_o: The error in the geotechnical measurements is not large enough to result in incorrect remediation design.

H_1: The error in the geotechnical measurements is large enough to result in incorrect remediation design.

False Positive and False Negative Errors

The impacts of a false positive or negative (in order of importance):

1.) credibility
2.) cost
3.) social
4.) ecological

To minimize the possibility of errors, all of the procedures will be conducted by qualified

101

personnel. The analysis shall adhere to the appropriate FEMP ASLs of quality control criteria as specified in the Site-Wide CERCLA Quality Assurance Project Plan (SCQ). The required ASLs for this study are level E.

In the event that a boring cannot be completed, a new boring will be started a minimum of five feet from the previous unsuccessful boring. If a boring cannot be successfully completed, it is likely that results from other sampling locations will serve as an effective substitute.

7.0 Design for Obtaining Quality Data

Geotechnical sampling and analysis will be performed in accordance to ASTM standards under a quality program which meets NQA1, QL3 requirements to assure quality results for design of the disposal facility. QC will be performed as specified in the applicable ASTM method (see section 3.0). The ASL for all geotechnical testing will be ASL E. All data will be checked by the engineer in accordance with approved design procedures and SCQ requirements.

Records documenting geotechnical laboratory equipment calibration will be maintained and included in the project records. Additionally results will be entered with standard site data entry verification procedures for electronic storage in the Sitewide Integrated Remediation Database (SIRD). Observed variability of results may result in a raise in the factor of safety in accordance with engineering practices. Any sample which retrieves an adequate quantity and acceptable configuration of material will be considered a successful sampling event.

8.0 Summary

The primary objective of this sampling and testing effort is to characterize and define the geotechnical properties of the coarse- and fine-grained materials for use in design and evaluation of excavation, dewatering, grading, and site restoration activities within the Former Plant Area of the FEMP.

The geotechnical tests of concern are listed in the table in Section 3. The samples will be collected and tested in accordance with engineering procedures which meet the requirements of the specified ASTM methods and NQA1, QL3 protocols. All geotechnical testing will be ASL E.

Data Quality Objectives
Former Plant Area
Geotechnical Sampling And Testing

1.A. Task/Description: Geotechnical Sampling and Testing Plan of the former Plant Area

1.B. Project Phase: (Put an X in the appropriate selection.)

RI ☐ FS ☐ RD ☒ RA ☐ R,A ☐
OTHER ☐ Specify:

1.C. DQO No.: GT-010 DQO Reference No.: N/A

2. Media Characterization: (Put an X in the appropriate selection.)

Air	☐	Biological	☐	Groundwater	☐
Sediment	☐	Soil	☒	Waste	☐
Wastewater	☐	Surface water	☐	Other (specify)	

3. Data Use with Analytical Support Level (A-E): (Put an X in the appropriate Analytical Support Level selection(s) beside each applicable Data Use.)

Site Characterization
A☐ B☐ C☐ D☐ E☐

Risk Assessment
A☐ B☐ C☐ D☐ E☐

Evaluation of Alternatives
A☐ B☐ C☐ D☐ E☐

Engineering Design
A☐ B☐ C☐ D☐ E☒

Monitoring during remediation activities
A☐ B☐ C☐ D☐ E☐

Other (Explain)
A☐ B☐ C☐ D☐ E☐

4.A. Drivers:
Final Feasibility Study Report for Operable Unit 5, Fernald Environmental Management Project", "Final Remedial Investigation Report for Operable Unit 5, Fernald Environmental Management Project", and "Final Remedial Design Workplan for Remedial Actions at Operable Unit 5, Fernald Environmental Management Project".

4.B. Objective:

The information generated by the geotechnical investigation study will be used to perform the detailed design including the stability and anticipated performance evaluation of the materials within the Former Plant Area which are pivotal to the excavation and remediation of the Former Plant Area of the FEMP.

5. Site Information (Description):

The soil testing will occur in the following areas:

- o The various tests will be performed on archived soil samples that have been collected within the Former Plant Area of the FEMP.
- o The various tests will be performed on soil samples obtained through additional physical sampling within the Former Plant Area of the FEMP.

6.A. Data Types with appropriate Analytical Support Level Equipment Selection and SCQ Reference: (Place an "X" to the right of the appropriate box or boxes selecting the type of analysis or analyses required. Then select the type of equipment to perform the analysis if appropriate. Please include a reference to the SCQ Section.)

1. pH	☐	2. Uranium	☐	3. BTX	☐
Temperature	☐	Full Radiologic	☐	TPH	☐
Specific Conductance	☐	Metals	☐	Oil/Grease	☐
Dissolved Oxygen	☐	Cyanide	☐	Silica	☐

4. Cations	☐	5. VOA	☐	6.	Other (specify)
Anions	☐	BNA	☐		Geotechnical: See Table in DQO
TOC	☐	Pesticides	☐		
TCLP	☐	PCB	☐		
CEC	☐				
COD	☐				

6.B. Equipment Selection and SCQ Reference:

Equipment Selection		Refer to SCQ Section
ASL A	_____	SCQ Section:___
ASL B	_____	SCQ Section:
ASL C	_____	SCQ Section:___
ASL D	_____	SCQ Section:___
ASL E	See GSTP	SCQ Section: 5.3.3

7.A. Sampling Methods: (Put an X in the appropriate selection.)

Biased	☒	Composite	☐	Environmental	☐	Grab	☐		
Grid	☐	Intrusive	☒	Non-Intrusive	☐	Phased	☐	Source	☐

Other (specify): _____

7.B. Sample Work Plan Reference: (List the samples required. Reference Geotechnical Sampling and Testing Plan of the Former Plant Area)

Background samples: Samples have been previously collected from the on-site area.

7.C. Sample Collection Reference: (Please provide a specific reference to the SCQ Section and subsection guiding sampling collection procedures.)

Sample Collection Reference: Appendix K

8. Quality Control Samples: (Place an "X" in the appropriate selection box.)

8.A. Field Quality Control Samples:

Trip Blanks	☐	Container Blanks	☐
Field Blanks	☐	Duplicate Samples	☒
Equipment Rinsate Samples	☐	Split Samples	☐
Preservative Blanks	☐		
Performance Evaluation Samples	☐		

Other (specify) _____

8.B. Laboratory Quality Control Samples:

Method Blank	☐	Matrix Duplicate/Replicate	☐
Matrix Spike	☐	Surrogate Spikes	☐

Other (specify) Per method

9. Other: Please provide any other germane information that may impact the data quality or gathering of this particular objective, task or data use.

APPENDIX C

GEOTECHNICAL INVESTIGATION SCHEDULE

GEOTECHNICAL INVESTIGATION SCHEDULE

Activity	Date
Begin Fieldwork	April 28, 1997
Complete Fieldwork	June 13, 1997
Begin Laboratory Testing	June 2, 1997
Complete Laboratory Testing	July 31, 1997
Issue Draft Geotechnical Investigation Report and Recommendations, Rev. A to DOE	September 19, 1997
Issue Geotechnical Investigation Report and Recommendations, Rev. B to US EPA and OEPA	October 17, 1997

Appendix D

APPENDIX D

PROJECT LOGS AND FORMS

WELL NUMBER:		CONTROL NUMBER:

FEMP
WELL COMPLETION LOG

PROJECT NAME:	PROJECT NUMBER:
GEOLOGIST:	DRILLING METHOD:

DATES OF INSTALLATION:	WATER LEVEL (ft.):	DATE:	RELATED FAL NUMBERS:	CHECKED BY:

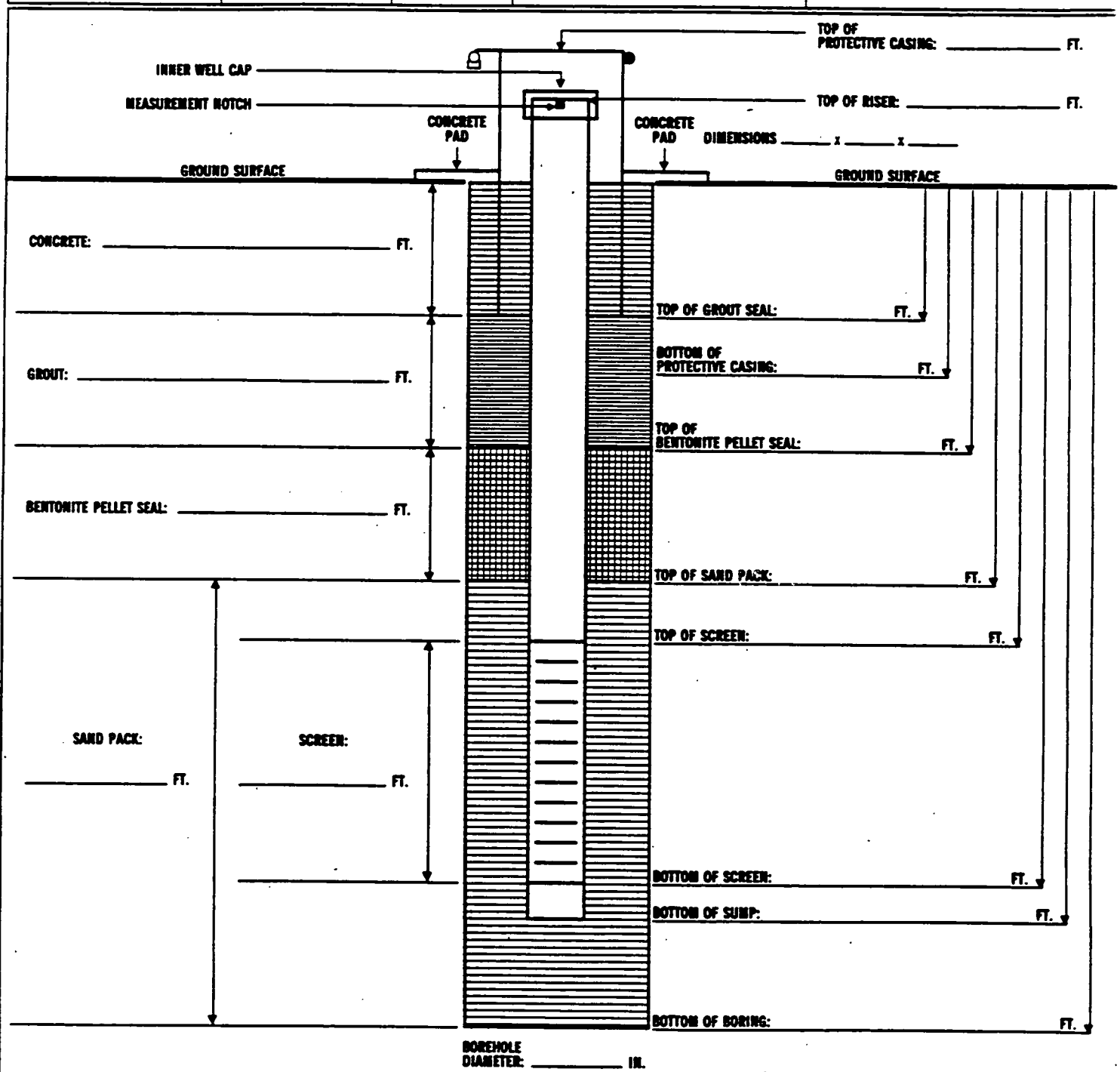

TYPE AND AMOUNT OF GROUT USED:	BENTONITE PELLETS (5-GALLON BUCKETS):	DEEPEST TEMPORARY DRILLING CASING PENETRATION: FT.
VOLUME OF WATER USED DURING DRILLING: GAL.	RISER MATERIAL:	VOLUME OF WATER USED FOR GROUT HYDRATION: GAL.

RISER WALL THICKNESS:	TYPE OF SAND PACK:	SCREEN MATERIAL:	DRILLING CASING DIAMETER: IN.
RISER/SCREEN DIAMETER: IN.	SCREEN SLOT SIZE: IN.	SCREEN TYPE:	DEPTH OF CENTRALIZER(S): FT.

FS-F-3684 (9/10/93)

110

FEMP

SAMPLE COLLECTION LOG

CONTROL NUMBER:	PAGE ____ OF ____

PREPARED BY:	BADGE NO.:	DATE:	REVIEWED BY:	BADGE NO.:	DATE:

SAMPLE LOCATION:	PROJECT NAME:	PROJECT NUMBER:
SAMPLE TEAM LEADER:	BADGE NO.:	SAMPLE TEAM NAME(S) / BADGE NO(S):

CUSTOMER NUMBER / FACTS ID (CUSTOMER # / FACTS ID)	SAMPLE TYPE CODE	SAMPLE SCREEN RESULTS (PID)	SAMPLE SCREEN RESULTS (RAD)	COLLECTION START		COLLECTION STOP		SAMPLE DEPTH — INTERVAL ( ) UNITS	PRESERVATIVE	NUMBER OF CONTAINERS	SAMPLE CONTAINER TYPE & SIZE	ANALYTICAL PARAMETERS (OR TARGET ANALYTE LIST)	VISUAL DESCRIPTION OF SAMPLE	DUPLICATE OF SAMPLE NUMBER	QA / QC SAMPLE DESIGNATION
				DATE	TIME	DATE	TIME								
								—							
								—							
								—							
								—							
								—							
								—							
								—							
								—							
								—							
								—							

REMARKS:

G:\WPSC\94-709.

REVISED 11-22-94

FS-F-3714

FEMP SAMPLE COLLECTION LOG - SAMPLE CODES

SAMPLE TYPE CODE		PRESERVATIVE CODE		QA/QC SAMPLE DESIGNATION CODE	
M103	Soil	P00	None Required	Q01	Preservation Blank
M104	Sediment	P01	Cool, 4°C	Q02	Container Blank
M111	Sludge	P02	Freeze, < 0°C	Q03	Temperature Blank
M112	Air Filter	P03	Filter on site	Q04	Trip Blank
M118	Miscellaneous (Specific description addressed in remark field)	P04	Filter on site/HNO_3 to pH < 2	Q05	Field Blank
M300	Tank Contents (Water)	P05	Filter on site/Cool, 4°C	Q06	Rinsate
M301	Tank Contents (Organic)	P06	Filter on site/Cool, 4°C/H_2SO_4 to pH < 2	Q07	Duplicate Sample
M302	Tank Contents (Unknown)	P07	H_2SO_4 to pH < 2	Q08	Split Sample
M305	Concrete	P08	H_2SO_4 to pH < 2/Cool, 4°C	Q09	Deionized Water Blank
M310	Liquid (Unknown)	P09	HCl to pH < 2	Q10	Matrix Spike
M314	Oils	P10	HCl to 1%	Q11	Matrix Spike/Matrix Spike Duplicate
M317	Rocks/Bricks	P11	HNO_3 to pH < 2		
M322	Solid (Unknown)	P12	HNO_3 to 1%		
M333	Deionized Water	P13	HNO_3 to pH < 2/Cool, 4°C		
M334	Drill Cuttings	P14	NaOH to pH > 12/Cool, 4°C		
		P15	$Na_2S_2O_3$ (10% soln) to 1%		
		P16	$Na_2S_2O_3$ 100 mg/L		
		P17	Cool, 4°C/2mL ZnOAc + NaOH to pH > 9		

FEMP

FIELD ACTIVITY LOG

CONTROL NO.:	PROJECT NO. / RI/FS WBS NO.:	PAGE ____ OF ____
PREPARED BY (NAME):	BADGE NO.:	DATE:

FIELD ACTIVITY SUBJECT:	GENERAL LOCATION / FACILITY DESCRIPTION:	
WEATHER CONDITIONS:	AIR TEMPERATURE:	BAROMETRIC PRESSURE (in Hg):

TIME	DESCRIPTION OF ACTIVITY

METER CALIBRATION

WATER QUALITY METER

MFR. NAME:	SERIAL NO.:	INITIALS:	DATE:	TIME:	STD. SOLN. MFR.:	STD. SOLN. LOT NO.:	STD. SOLN. EXP. DATE:

PHOTOIONIZATION DETECTOR

MFR. NAME:	SERIAL NO.:	INITIALS:	DATE:	TIME:	CAL. GAS MFR.:	CAL. GAS TYPE:	CAL. GAS CONC.:	ppm:	PROBE eV:

ALPHA METER		BETA GAMMA METER		CALIBRATION PROBLEMS:
MFR. NAME:	SERIAL NO.:	MFR. NAME:	SERIAL NO.:	

VISITORS		TIME	
NAME(S)	ORGANIZATION(S)	ARRIVED	DEPA

FS-F-3682 (11-08-94)

G:\WPSC\94-364.DRW

112

FEMP

FIELD ACTIVITY LOG

(CONTINUATION PAGE)

CONTROL NO.:	PROJECT NAME / NO.:	PAGE ____ OF ____
PREPARED BY (NAME):	BADGE NO.:	DATE:

FIELD ACTIVITY SUBJECT:	GENERAL LOCATION / FACILITY DESCRIPTION:

TIME	DESCRIPTION OF ACTIVITY

FEMP

LITHOLOGIC LOG

CONTROL NO.:	PAGE _____ OF _____

PROJECT NAME:	PROJECT NO.:

BORING NUMBER:	COORDINATES:	DRILLING CONTRACTOR:	DRILLER / HELPER:

SURFACE ELEVATION:	GROUNDWATER LEVEL:	DATE:	TIME:	DATE STARTED:
GEOLOGIST:	GROUNDWATER LEVEL:	DATE:	TIME:	DATE COMPLETED:

WATER USED DURING DRILLING: GAL	WATER RECOVERED DURING DRILLING: GAL	DRILLING EQUIPMENT:

DEPTH (FEET)	SAMPLE TIME, DATE, AND NUMBER	BLOWS (per 6 inch)	RECOVERY (inches)	DESCRIPTION (Colors identified per Munsell Color Chart)	USCS SYMBOL	MEASURED CONSISTENCY (TSF)	REMARKS

INSTRUMENT	BACKGROUND	DATE	TIME
PID			
ALPHA			
BETA / GAMMA			

NOTES:

* SAMPLES COLLECTED PER ASTM STANDARD PENETRATION TEST.

FS-F-3681

G: / WPSC / 95-0037.DRW (2-15-95)

114

VARIANCE FORM - FORMER PLANT AREA GEOTECHNICAL INVESTIGATION

[ ] MINOR VARIANCE	[ ] SIGNIFICANT VARIANCE	[ ] PROGRAMMATIC VARIANCE
VAR NO.:	PAGE: OF	DATE:

VARIANCE DESCRIPTION:

VARIANCE

JUSTIFICATION FOR VARIANCE

REQUESTED BY: Date:

APPROVALS

X IF REQD	APPROVAL	DATE	X IF REQD	APPROVAL	DATE
	FDF GEOLOGIST			PARSONS GEOLOGIST	
	FDF TASK MANAGER			FDF SAFETY AND HEALTH REPRESENTATIVE	
	FDF ENGINEERING MANAGER			FDF RADIOLOGICAL TECHNICIAN	
	FDF PROJECT MANAGER			FDF ENVIRONMENTAL TASK MANAGER	
	QUALITY ASSURANCE			OTHER	

VARIANCE FORM (CONTINUATION) - FORMER PLANT AREA GEOTECHNICAL INVESTIGATION		
VAR. NO.:	PAGE: OF	DATE:

VARIANCE (CONTINUATION)

JUSTIFICATION FOR VARIANCE (CONTINUATION)

FERMCO
Environmental Management Corporation

P.O. BOX 538704
CINCINNATI, OH 45253-8704

CHAIN OF CUSTODY / REQUEST FOR ANALYSIS RECORD

REFERENCE DOCUMENT NO.: _____

ORIGINAL MEF NO.: _____ CORRESPONDING REFERENCE DOCUMENT NO.: _____

PAGE 1 OF _____

RELEASE NO.:	PROJECT NO.:	FOR SAMPLE RELATED PROBLEMS, ACS CONTACT / PHONE:	CONTRACT PURCHASE ORDER / TASK ORDER NO.:
PROJECT NAME:		REQUIRED REPORT DATE / LAB TAT:	SAMPLE SHIPMENT DATE:
PROJECT CONTACT / PHONE:		RECEIVING LAB NAME:	SAMPLE SHIPPER (Print):
CHARGE NO.:	LOT MARKING NO.:	RECEIVING LAB ADDRESS:	OFF-SITE LAB CONTACT:

SAMPLING TEAM (Print) & GROUP NAME / PHONE:

SAMPLING TEAM (Signature & Badge No.):

ITEM NO.	SAMPLE NUMBER: FACTS ID	SAMPLE NUMBER: CUSTOMER ID / SAMPLE POINT	SAMPLE MATRIX	COMP	GRAB	FILTERED	COLLECTION: DATE	COLLECTION: TIME	CONTAINER: TYPE	CONTAINER: VOL.	NO. CONTRS	PRESERVATION	ASL	ANALYSES REQUESTED. If more space is required, use the SPECIAL INSTRUCTIONS block.	SAMPLE OKAY? (Y/N)* FERMCO	SAMPLE OKAY? (Y/N)* OFF-SITE
1																
2																
3																
4																
5																
6																
7																
8																
9																
10																

SPECIAL INSTRUCTIONS:

RELINQUISHED: ITEM / REASON	RELINQUISHED BY (Signature) / AFFILIATION	BADGE NO.	DATE	TIME	RECEIVED: RECEIVED BY (Signature) / AFFILIATION	BADGE NO.	DATE	TIME
		1				1		
		2				2		
		3				3		
		4				4		
						5		

DISTRIBUTION O[illegible]S | WHITE ON-SITE - RELEASE FILE / OFF-SITE ANALYTICAL LAB - RETURN TO FEMP | YEL[illegible]N-SITE - DISTRIBUTE AS NEEDED / OFF-SITE ANALYTICAL LAB - RETURN TO FEMP | BLUE SAM[illegible]ECH / PROJECT FILE

FB-F-3361 (09-21[illegible]

SHADED AREAS ARE TO BE COMPLETED B[illegible]HE SAMPLE RECEIVING GROUP.

* IF "N" THEN COMPLETE APPLICABLE NON-CONFORM[illegible] PROCEDURE

256

117

FERMCO

CHAIN OF CUSTODY / REQUEST FOR ANALYSIS CHANGE REQUEST RECORD

(Attach to the correct original COC / RFA Record, if possible.)

COC / REFERENCE DOCUMENT NO.:	RELEASE NO.:
PROJECT NO.:	
ASSOCIATED NON-CONFORMANCE MEMO NO.:	

CRR PREPARATION

PRINTED NAME:	SIGNATURE:	BADGE NO.:	AFFILIATION:	DATE:

PROJECT CONTACT APPROVAL

PRINTED NAME:	SIGNATURE:	BADGE NO.:	AFFILIATION:	DATE:

LABORATORY RECEIPT APPROVAL

PRINTED NAME:	SIGNATURE:	BADGE NO.:	AFFILIATION:	DATE:

COC / RFA RECORD SECTION REQUIRING MODIFICATION (CHECK ALL APPLICABLE)

- ☐ FACTS ID
- ☐ RELEASE NO.
- ☐ CHARGE NO.
- ☐ CONTRACT PURCHASE ORDER / TASK ORDER NO.
- ☐ ANALYSES REQUESTED
- ☐ CUSTOMER ID
- ☐ SAMPLE POINT
- ☐ ASL
- ☐ MEF NO.
- ☐ OTHER (EXPLAIN) _____

FACTS ID	CUSTOMER ID / SAMPLE POINT	REQUIRED CORRECTIONS TO THE COC / RFA RECORD	SCL CORRECTED (CHECK) *

* The noted corrections must also be transcribed to the corresponding Sample Collection Log (SCL) and other documents (i.e., boring logs, daily activity logs, etc.) with a copy of this CRR attached. If applicable, the person maintaining custody of the samples must make the necessary corrections to the sample container labels.

WHITE ON-SITE - RELEASE FILE / OFF-SITE ANALYTICAL LAB - RETURN TO FEMP	YELLOW ON-SITE DISTRIBUTE AS NEEDED / OFF-SITE ANALYTICAL LAB - RETURN TO FEMP	BLUE SAMPLING TEAM - PROJECT FILE

FS-F-3713 (05/95)

811

FERMCO
Restoration Management Corporation

CHAIN OF CUSTODY / REQUE OR ANALYSIS RECORD (CONTINUED)

PROJECT NO.: _____ REFERENCE DOCUMENT NO.: _____

PROJECT NAME: _____ CORRESPONDING REFERENCE DOCUMENT NO.: _____ PAGE _____ OF _____

ITEM NO.	SAMPLE NUMBER: FACTS ID	SAMPLE NUMBER: CUSTOMER ID / SAMPLE POINT	SAMPLE MATRIX	COMP	GRAB	FILTERED	COLLECTION: DATE	COLLECTION: TIME	CONTAINER: TYPE	CONTAINER: VOL.	NO. CONTRS	PRESERVATION	ASL	ANALYSES REQUESTED (If more space is required, use the SPECIAL INSTRUCTIONS block.)	SAMPLE OKAY? (Y/N)*: FERMCO	SAMPLE OKAY? (Y/N)*: OFF-SITE

SPECIAL INSTRUCTIONS:

DISTRIBUTION OF C[illegible] WHITE ON-SITE - RELEASE FILE / OFF-SITE ANALYTICAL LAB - RETURN TO FEMP | YELLO[illegible]SITE - DISTRIBUTE AS NEEDED / OFF-SITE ANALYTICAL LAB - RETURN TO FEMP | BLUE SAMPL[illegible] PROJECT FILE

FS-F-3361-1 (09-21-95)

SHADED AREAS ARE TO BE COMPLETED BY THE SAMPLE RECEIVING GROUP.

* IF "N", THEN COMPLETE APPLICABLE NON-CONFORMANCE PROCEDURE.

Appendix E

APPENDIX E

UNEXPECTED DISCOVERY OF CULTURAL RESOURCES

CONTROL NO. FEZ-0126
SITE PROCEDURE: EP-0003
REVISION NO. 1

UNEXPECTED DISCOVERY OF CULTURAL RESOURCES

Effective Date: 02-10-95

Originator (Subject Expert): _____ 2/10/95
Date

Checker Concurrence: _____ 2/10/95
Date

APPROVED BY: _____ 2/10/95
T. Hagen, Environmental Compliance Date

FERNALD ENVIRONMENTAL MANAGEMENT PROJECT

Fernald Environmental Restoration Management Corporation
P. O. Box 538704
Cincinnati, Ohio 45253-8704

TABLE OF CONTENTS

SECTION	TITLE	PAGE
1.0	PURPOSE	3
2.0	SCOPE	3
3.0	REFERENCES	3
4.0	RESPONSIBILITIES	3
5.0	GENERAL	4
6.0	PREREQUISITES	4
7.0	PROCEDURE	4
8.0	APPLICABLE DOCUMENTS	7
8.1	DRIVERS	7
9.0	DEFINITIONS	7

LIST OF FIGURES

FIGURE	TITLE	PAGE
1	UNEXPECTED CULTURAL RESOURCES DISCOVERY FORM	6

LIST OF ATTACHMENTS

ATTACHMENT	TITLE	PAGE
A	PREHISTORIC/HISTORIC ASSESSMENT REPORT FORMAT	A-1

ISSUE AND REVISION SUMMARY

Revision	Date	Description of Issue or Revision
0	03-31-94	New procedure for handling the discovery of cultural resources at the FEMP, per Request No. S94-003, iniitated by J. Homer.
1	02-10-95	Minor revision to document per Request No. S94-135, initiated by J. Homer. This document supersedes SSOP-1070, dated 03-31-94, Rev. 0.

1.0 PURPOSE

This procedure provides the method by which Fernald Environmental Restoration Management Corporation (FERMCO) personnel, sub-contractor personnel and any other persons working or assisting with the conduct of a project, shall notify the FERMCO Cultural Resource Coordinator (CRC) of the Environmental Planning Department of the Environmental Technical Services Division, of the unexpected discovery of Cultural Resources, during drilling or any other ground disturbing activities, at the Fernald Environmental Management Project (FEMP) or beyond its boundaries.

2.0 SCOPE

This procedure applies to all FERMCO personnel, subcontractor personnel, and any other persons working or assisting with the conduct of a project. This procedure addresses all ground disturbing activities in process at the FEMP.

3.0 REFERENCES

- 36 CFR 800, "Protection of Historic Properties"
- "Secretary of the Interior Standards and Guidelines for Archaeology and Historic Preservation"

4.0 RESPONSIBILITIES

DOE-FN Cultural Resources Point of Contact

- Notifies SHPO of unexpected cultural resource discovery.
- Negotiates mitigation.
- Notifies FERMCO of authorization to proceed with work.

Natural Resource Management Department Manager

- Notifies DOE-FN of unexpected cultural resource discovery.
- Coordinates mitigation.
- Signs Prehistoric/Historic Assessment Report.

Cultural Resource Coordinator (CRC)

- Coordinates Cultural Resource Management Program.
- Notifies Natural Resource Management Department Manager of unexpected cultural resource discovery.

4.0 **RESPONSIBILITIES** (cont.)

- Completes and signs Prehistoric/Historic Assessment Report.
- Assists in completion and signs unexpected cultural resource discovery form.
- Coordinates mitigation.

Responsible Field Representative

- Stops work upon discovery of a cultural resource.
- Notifies CRC upon discovery of a cultural resource.
- Completes and signs Unexpected Cultural Resource Discovery form.

5.0 **GENERAL**

Section 106 of the National Historic Preservation Act requires Federal agencies to take into account the effects of their actions on properties that are on, or eligible for inclusion on, the National Register of Historic Places. This list includes undiscovered resources as well as districts, sites, buildings, structures, or objects.

To comply with Section 106 and because of the large number of historic and archaeological resources existing in the area, consultation was requested by the Department of Energy (DOE) from the SHPO concerning proposed remedial activities at the FEMP. This consultation resulted in an agreement that any planned surface disturbance activities in non-controlled areas at the FEMP must be preceded by a cultural resources survey to determine the existence of potentially significant historic or archeological resources.

Any records resulting from following this procedure shall be archived with the CRC program and made available on a "need to know" basis as specified in public law (PL) 96-95.

6.0 **PREREQUISITES**

None

7.0 **PROCEDURE**

FIELD PERSONNEL

1. Upon the unexpected discovery of any historic, prehistoric, or archaeological site, feature, or object, immediately cease all ground disturbing activity and contact the responsible Field Representative.

7.0 PROCEDURE (cont.)

RESPONSIBLE FIELD REPRESENTATIVE

2. Immediately report the discovery to the CRC and the responsible CRU Director or Division Manager.

3. Complete the Unexpected Cultural Resources Discovery Form (Figure 1) and log it into the Field Activity Daily Log.

   NOTE: Proper Document Control Procedures must be followed.

4. Submit the Discovery form and a copy of the Field Activity Daily Log to the CRC.

CULTURAL RESOURCE COORDINATOR

5. Verbally report the discovery to the Natural Resource Management Department Manager.

6. Complete and sign a Prehistoric/Historic Assessment Report using the format provided (Attachment A).

CULTURAL RESOURCE COORDINATOR

7. Determine whether an on-call Cultural Resources Subcontractor will be used.

8. Submit the completed Prehistoric/Historic Assessment Report and the Unexpected Cultural Resources Discovery Form to the Natural Resource Management Department Manager.

NATURAL RESOURCE MANAGEMENT DEPARTMENT MANAGER

9. Sign the Prehistoric/Historic Assessment Report and the Unexpected Cultural Resources Discovery Form.

10. Verbally contact the DOE Cultural Resource Point of Contact and forward the signed Prehistoric/Historic Assessment Report. Include a copy of the completed Unexpected Cultural Resources Discovery Form.

DOE CULTURAL RESOURCE POINT OF CONTACT

11. Contact the SHPO and obtain concurrence for the mitigation procedure to be followed, if any. At the same time, notify the private property owner(s), if applicable.

CULTURAL RESOURCE COORDINATOR

12. Secure the cultural resource area until notified by DOE.

ENVIRONMENTAL COMPLIANCE/ENVIRONMENTAL PLANNING UNEXPECTED CULTURAL RESOURCES DISCOVERY FORM	Date/Time of Discovery: Construction Engineer:
PROJECT TITLE: PROJECT LOCATION:	Contact with Construction Contract Manager and Time:
Location of Discovery (Include sketch map):	
Description of Discovery (Include any damage to discovery, additional discovery observed, etc. Use additional sheets, if necessary):	
Method of Discovery:	
Additional Comments:	
National Resource Management Department Manager:	Date:
CRU Director/Division Manager:	Date:
Responsible Field Representative:	Date:
Cultural Resource Coordinator Signature:	Date:

FS-F-3780 (Rev. 03/08/94)

Figure 1 - Unexpected Cultural Resources Discovery Form

7.0 **PROCEDURE** (cont.)

13. If necessary, in compliance with 36 CFR 800 and through consultation with legal and other necessary divisions/departments, formulate a draft recovery plan based on the Prehistoric/Historic Assessment Report and/or SHPO comments.

14. If necessary, prepare a private property deed of gift for signature by DOE and the private property owner(s).

15. Upon execution of an assessment by all parties and the recording of any deed of gift in the county court, and if necessary, coordinate mitigation efforts through an on-call Subcontractor or through the Natural Resource Management Department.

RESPONSIBLE FIELD REPRESENTATIVE

16. After receipt of notification from the DOE, direct field personnel to proceed with ground disturbing activities in the affected area.

8.0 **APPLICABLE DOCUMENTS**

8.1 DRIVERS

- Antiquities Act: For the Preservation of American Antiquities, approved June 8, 1906 (Public Law 59-209; 34 STAT 225: 16USC 431-433).

- Historic Sites, Buildings, and Antiquities Act - Provides for the Preservation of Historic American Sites, buildings, objects, and antiquities of national significance, approved August 21, 1935, (Public Law 74-292; 49 STAT 666; 16USC 461-467)

  NOTE: Reviewers note - § = Section.

- National Historic Preservation Act of 1966, as amended - Establishes a Program for the Preservation of historic properties throughout the Nation. (16 U.S.C. § 470)

- Archeological Resources Protection Act of 1979 - Protects archeological resources on public, federal, and Indian lands. (16 U.S.C. § 470aa - 470cc)

- The American Indian Religious Freedom Act - Requires federal agencies to ensure that none of their actions interfere with the inherent rights of individual Native Americans. (42 U.S.C. § 1996)

- The Native American Graves and Protection and Repatriation Act of 1990 - Curatorship of federally owned and administered archeological collections. (25 U.S.C. § 3001 *et seq*)

9.0 **DEFINITIONS**

Cultural Resource Coordinator (CRC) - The FERMCO employee designated by the Natural Resource Management Department (or successor) as the principal contact for cultural resource management at the FEMP site.

9.0 **DEFINITIONS** (cont.)

Cultural Resources - See definition for Historic Properties.

Ground Disturbing Activity - Any activity that disturbs the ground either on the FEMP site or at any other property where FEMP conducted operations are occurring. Examples of ground disturbance include, but are not limited to, stripping of topsoil, drilling wells, and road improvements.

Field Personnel - FERMCO or Subcontractor employees who are conducting ground disturbing activities.

Historic Properties - Any prehistoric or historic district, site, building, structure, or object included in, or eligible for inclusion in, the National Register of Historic Places. This includes artifacts, records, and remains that are related to such a district, site, building, structure, or object.

Responsible Field Representative - The FERMCO or subcontractor employee designated by the project manager with responsibility for field activities pertaining to the project.

State Historic Preservation Office (SHPO) - The state authority responsible for enforcement of the National Historical Preservation Act.

Unexpected Discovery - Obtaining knowledge of the existence of an Historic Property.

ATTACHMENT A

Prehistoric/Historic
Assessment Report Format

1.0 Introduction and Project Description

2.0 Environmental Setting

3.0 Cultural Setting
- 3.1 Historic
- 3.2 Prehistoric
- 3.3 Recorded Cultural Resources within Project Area

4.0 Research Methods
- 4.1 Archival Research
- 4.2 Field Methods
  - 4.2.1 Site Mapping
  - 4.2.2 Photographs

5.0 Results of Investigation
- 5.1 Site Description
- 5.2 Feature Description
- 5.3 Soil Stratigraphy

6.0 Curatorship

7.0 Impact Assessment

8.0 Conclusion & Recommendations (including mitigation)

9.0 Signatures (CRC, Responsible Field Representative, Natural Resources Management Department Manager, CRU Director/Division Manager)

Appendix F

APPENDIX F

METHODOLOGY FOR DENISON SAMPLING

This appendix provides an overview of the procedure and methodology for sampling using the Denison sampler. For this geotechnical study, samples shall generally be taken in soils which have a standard penetration resistance higher than 20 blows/foot, as directed by project engineers.

Borings utilizing the Denison sampler shall be taken in order to obtain soil samples for laboratory testing. Samples shall be taken with a four-inch diameter Denison sampler capable of recovering samples that are two feet long. Plastic liners shall be used. Each sample shall be taken carefully so that the soil will remain as undisturbed as possible. The extension of the inner barrel shoe beyond the outer barrel cutting teeth shall be the least amount which results in a full barrel of soil, and which will not cause undercutting or contamination of the sample by a drilling fluid. Sampling shall proceed to obtain a continuous vertical specimen. After the hole has been thoroughly cleaned, the sampler shall be lowered carefully into the hole. The sampler shall be placed in contact with the bottom of the hole. The driller shall make sure that the truck jacks carrying the truck load will not be lifted on the springs and tires when load is applied to the sampler. The sample tube shall then be forced into the ground in a continuous drive and at a rate of penetration equal to the rate at which the outer barrel is able to cut. The speed of rotation shall be limited to that which will not rupture the soil sample. After the tube has been inserted to its full length into the soil, the driller shall wait approximately five minutes before beginning to withdraw. The tube shall then be withdrawn from the bottom of the hole in a smooth constant motion using hydraulic pressure to pull the tube at a rate of about one inch per second. Turning of the rods with a wrench to break the friction of the sample shall not be allowed unless all other methods have been attempted first and shall not be resorted to unless approved by the project engineers. After the sample has pulled free from the bottom of the hole by a clearance of about one to two feet, removal shall stop momentarily to allow the drilling fluid to flow around the bottom of the tube (about 30 seconds). Removal shall then continue at a slow and uniform withdrawal rate not to exceed 0.5 feet per second. Breaking the pipe joints during withdrawal shall be done carefully and in sections as large as can be practically handled; so as not to disturb the sample.

Once the Denison Samplers has been removed from the auger flights, the plastic sampling tube (inserted in the Denison Sampler and containing the sample) will be removed from the Denison Sampler. The ends of the tube are to be capped, tapped with duct tape and sealed with molten wax. Once the wax has cooled, the sampling tube is to be overpacked in sections of four- to six-inch PVC casing (or other appropriate containers) with vermiculite used as a packing material. PVC casings containing samples will be overpacked in either 55 or 85 gallon drums for shipment to the geotechnical laboratory. Vermiculite will be used as a packing material inside the 55 or 85 gallon drums.

Appendix G

APPENDIX G

TILL THICKNESS AND GEOLOGIC CROSS-SECTION

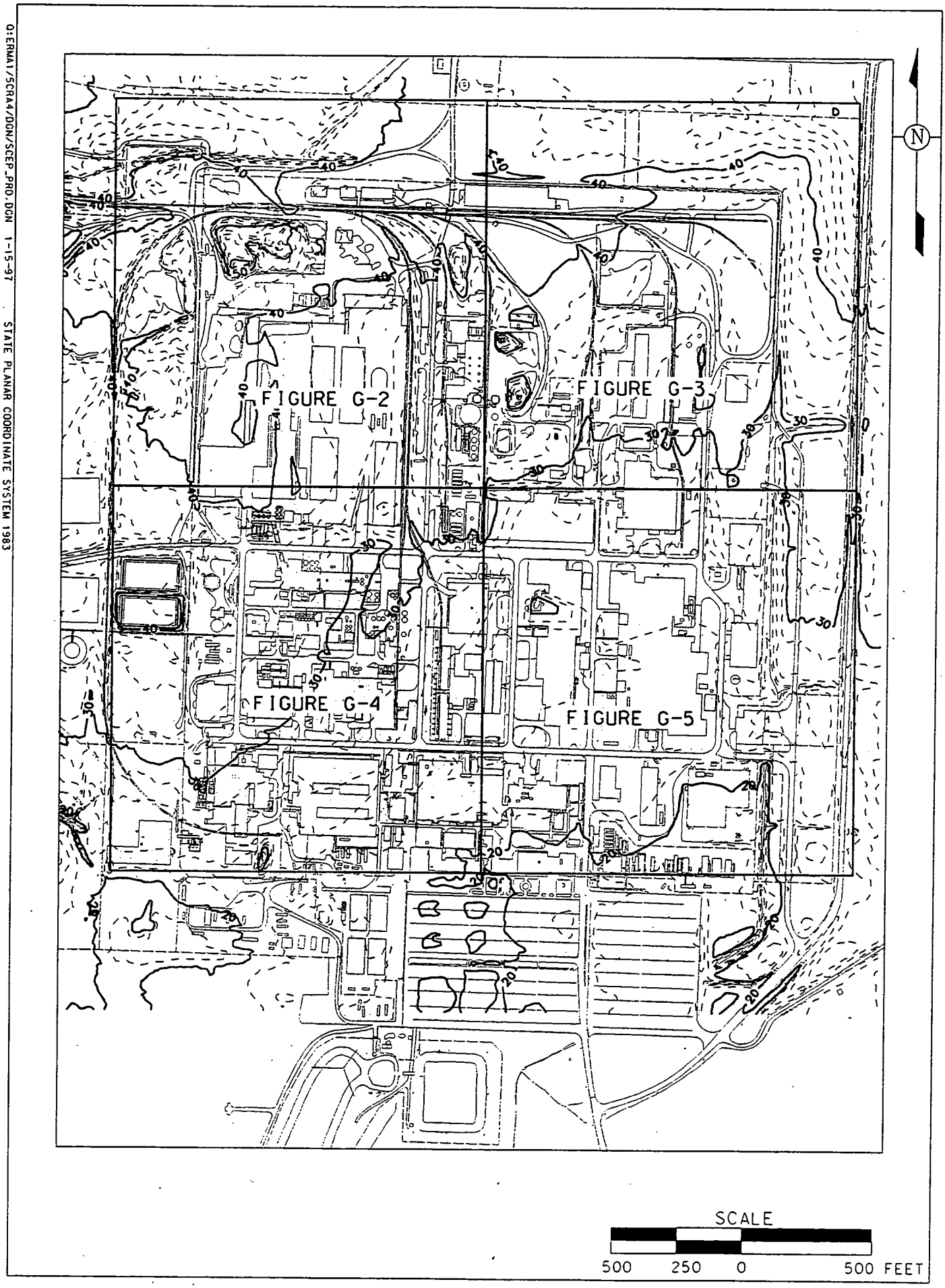

FIGURE G-1. TOTAL TILL THICKNESS - OVERVIEW

Q:ERMA1/5CRA4/DGN/SCEP_PRD.DGN 1-15-97 STATE PLANAR COORDINATE SYSTEM 1983

ERMA1/SCRA4/DGN/SCP_PRD1.DGN 1-16-97 STATE PLANAR COORDINATE SYSTEM 1983

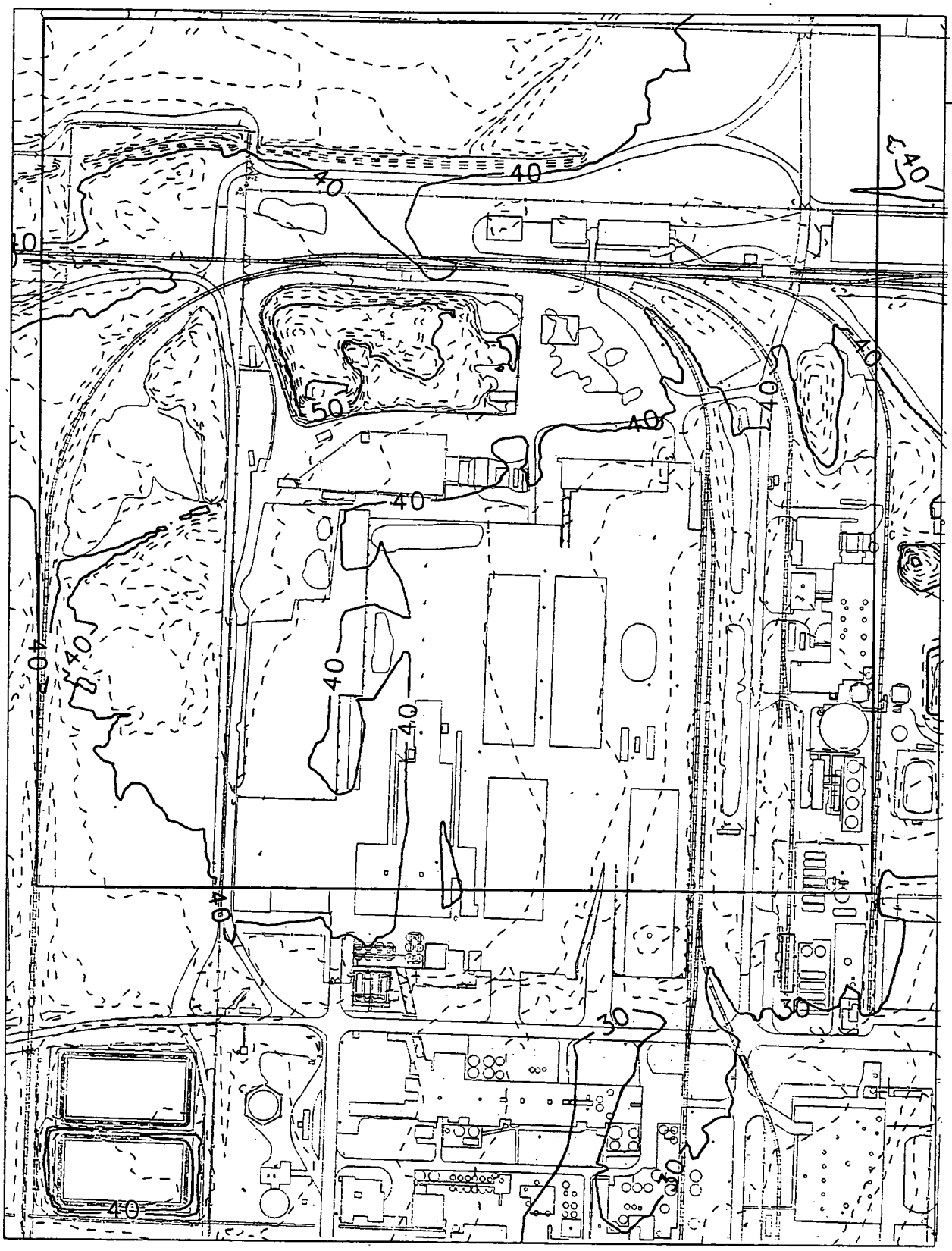

LEGEND:

NORTH WEST QUADRANT

SCALE

250 125 0 250 FEET

FIGURE G-2. TOTAL TILL THICKNESS (NW QUADRANT)

ERMA1/SCRA4/DGN/SCP_PRD2.DGN 1-16-97 STATE PLANAR COORDINATE SYSTEM 1983

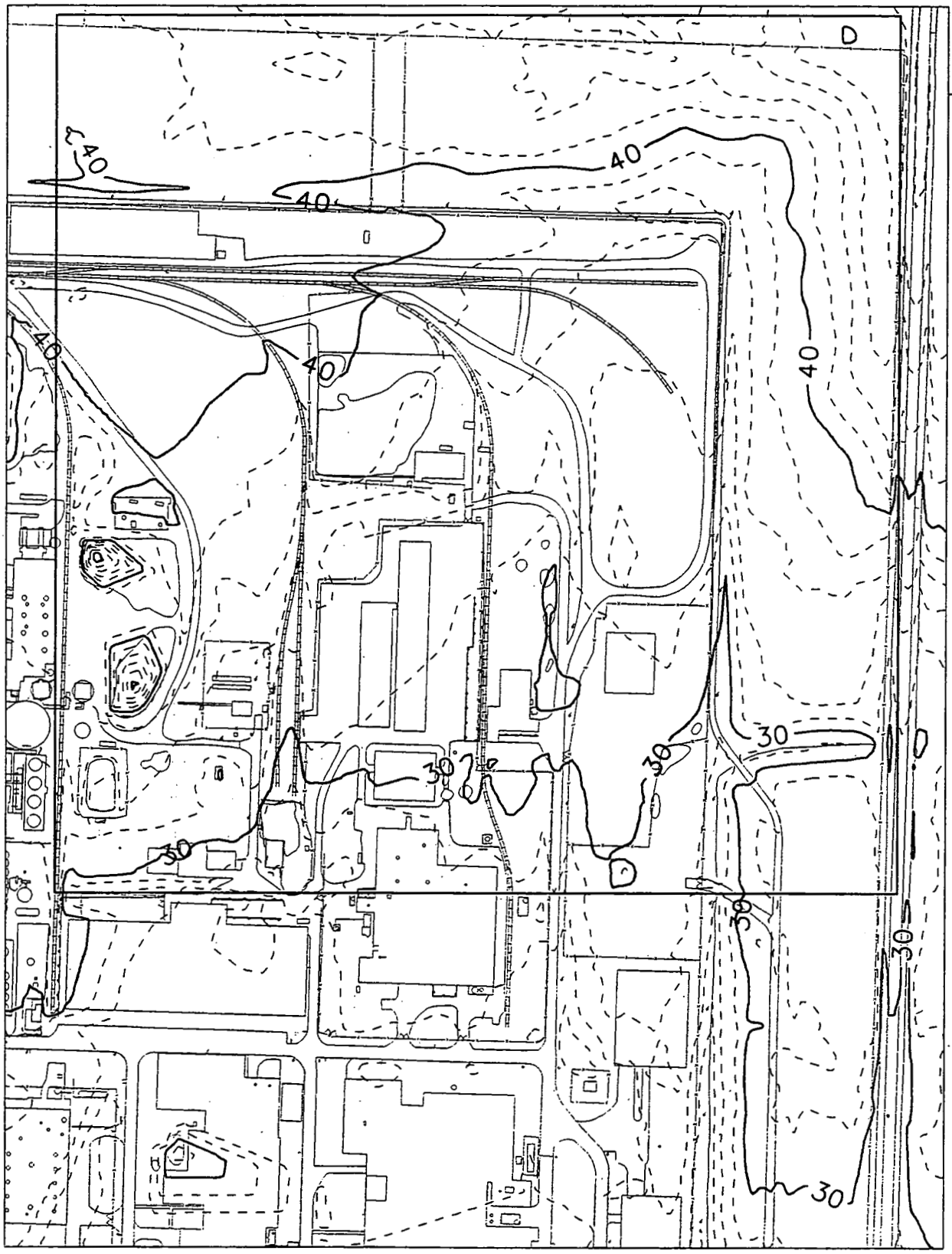

LEGEND:

NORTH EAST QUADRANT

SCALE

250 125 0 250 FEET

FIGURE G-3. TOTAL TILL THICKNESS (NE QUADRANT)

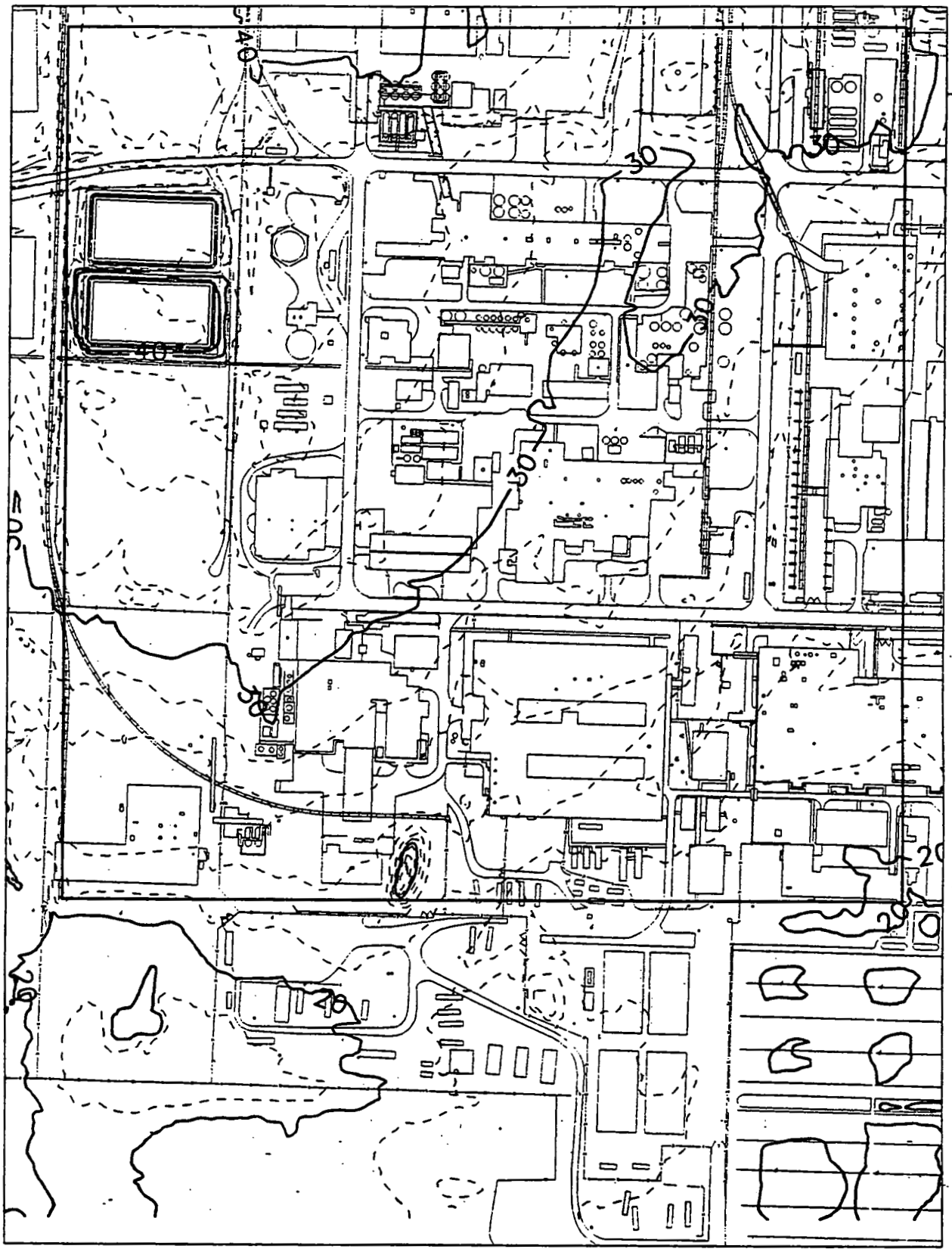

LEGEND:

SOUTH WEST QUADRANT

SCALE

250 125 0 250 FEET

FIGURE G-4. TOTAL TILL THICKNESS (SW QUADRANT)

ERMAT/SCRA4/DGN/SCP_PRD4.DGN 1-16-97 STATE PLANAR COORDINATE SYSTEM 1983

ERMA1/SCRA4/DGN/SCP_PR03.DGN 1-16-97 STATE PLANAR COORDINATE SYSTEM 1983

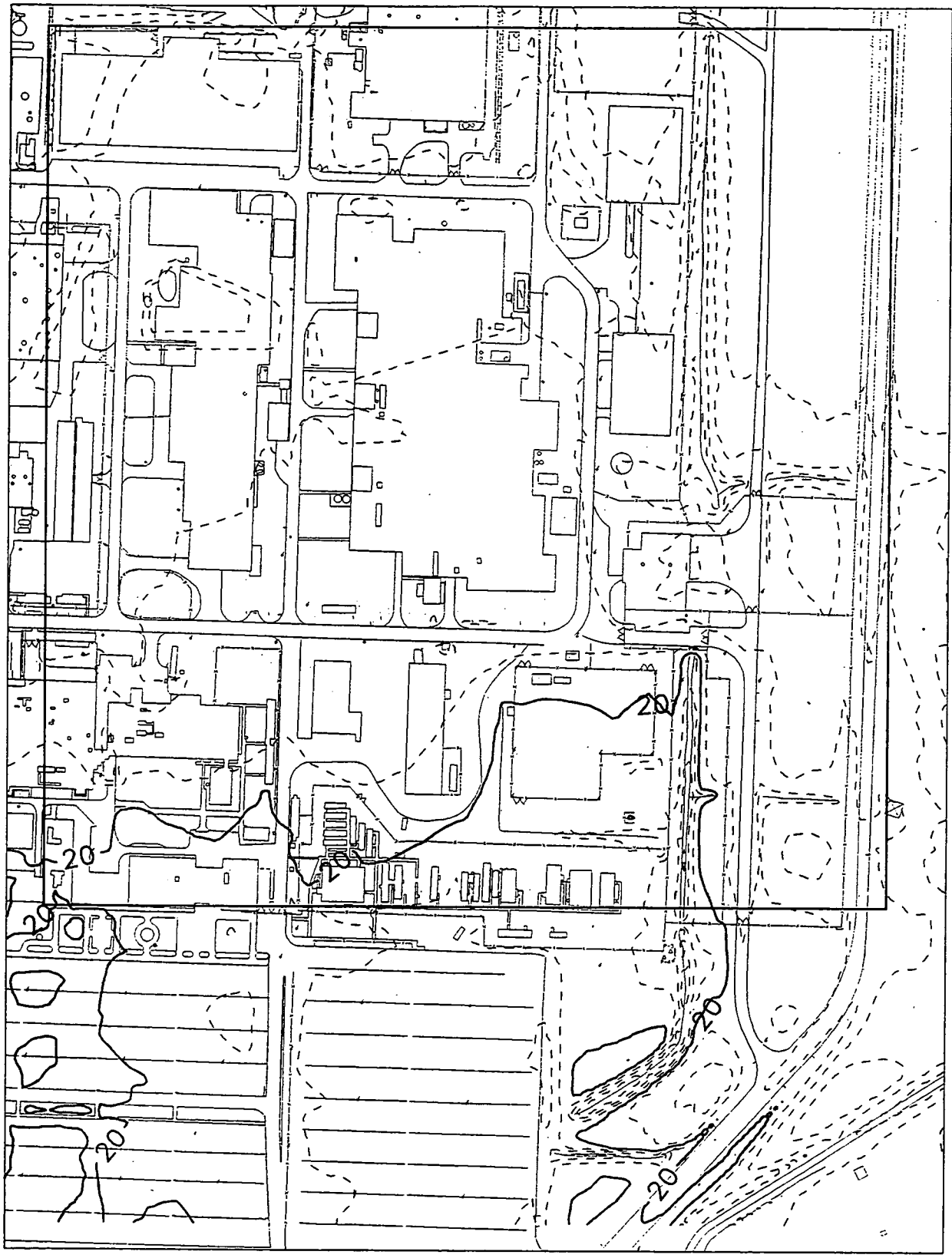

LEGEND:

SOUTH EAST QUADRANT

SCALE

250 125 0 250 FEET

FIGURE G-5. TOTAL TILL THICKNESS (SE QUADRANT)

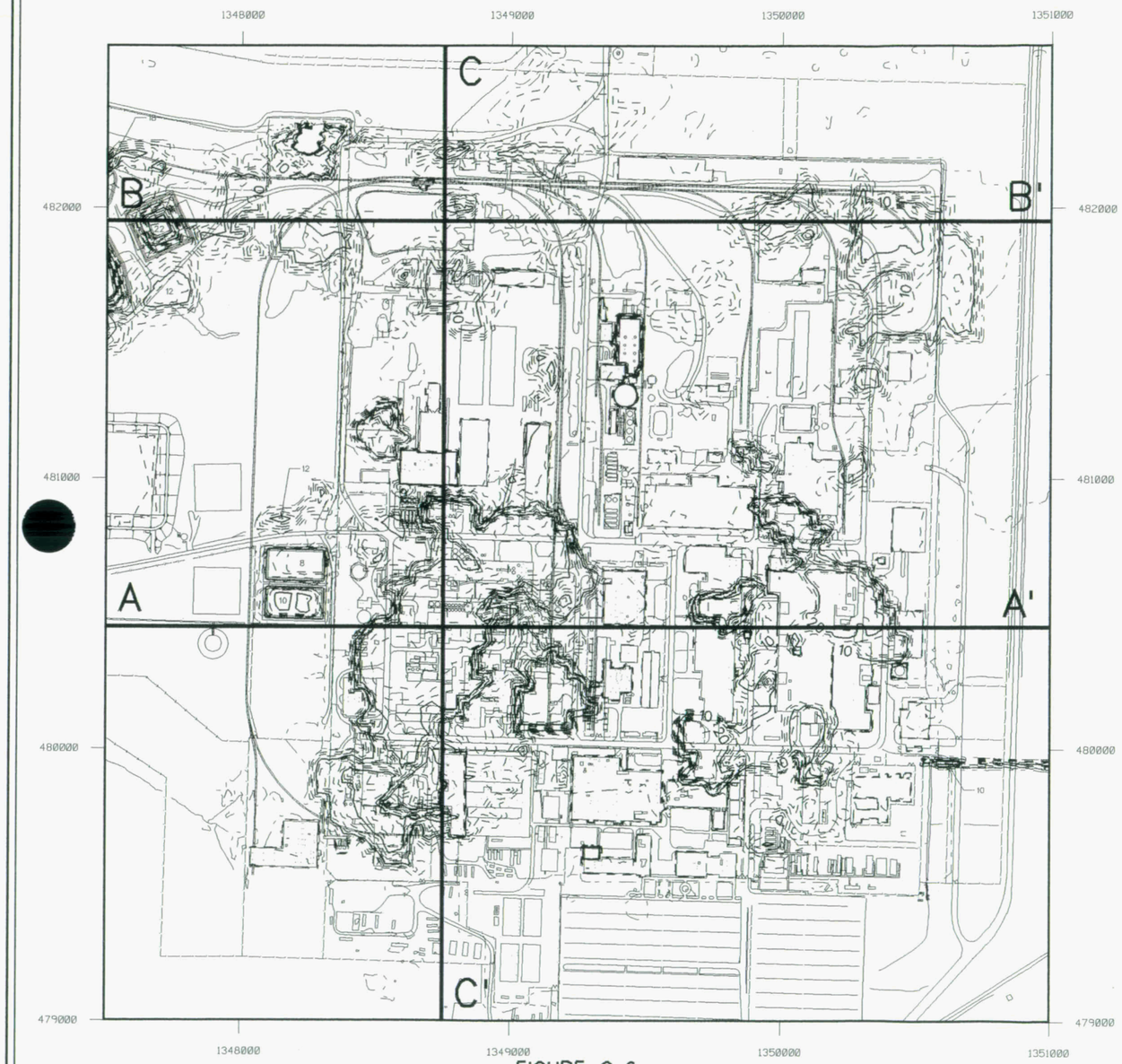

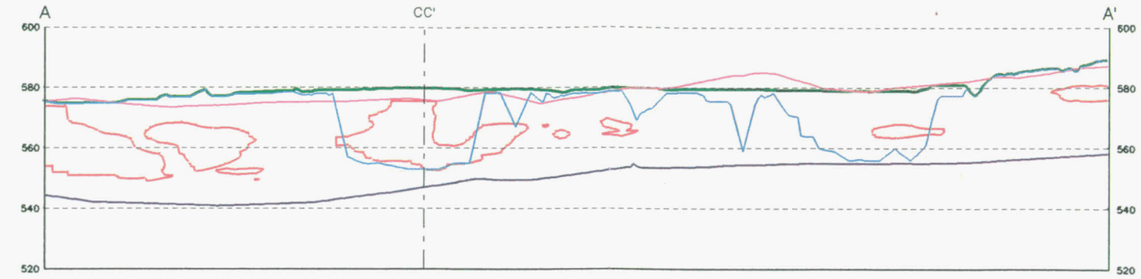

SECTION AA' - 480,450 N.

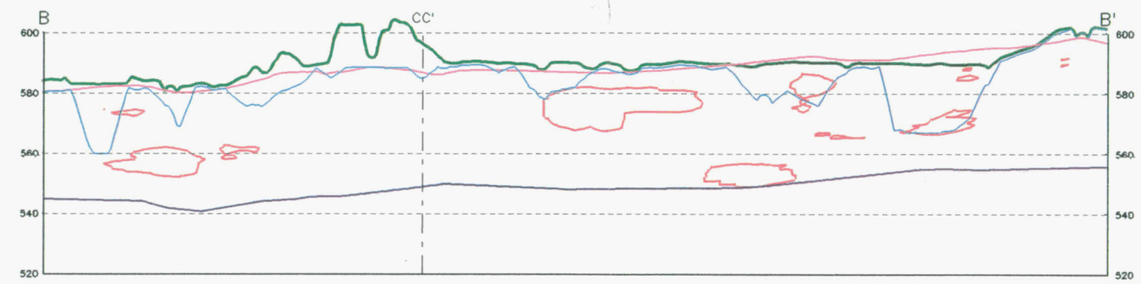

SECTION BB' - 481,950 N.

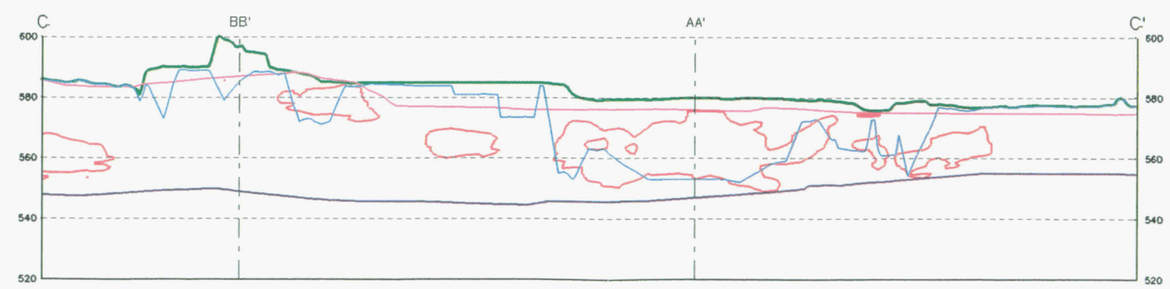

SECTION CC' - 1,348,750 E.

LEGEND

- GROUND SURFACE
- BASE OF FILL (FROM 1952 TOPOGRAPHY)
- BASE OF SCEP EXCAVATION
- TOP OF G.M.A.
- MODELED COARSE-GRAINED MATERIAL

SCALE

H : 250 125 0 250 FEET
V : 25 12½ 0 25 FEET

FIGURE G-6
SCEP EXCAVATION - PRODUCTION AREA CROSS-SECTIONS

Note : Excavation depths are not measured from existing ground surface in some areas.

5-FEB-1997
5CRA4/DGN/SECT_PRD.DGN

Appendix H

APPENDIX H

METHODOLOGY FOR USING HOLLOW-STEM AUGER AS A TEMPORARY CASING IN ZONES OF SUBSURFACE URANIUM CONTAMINATION

Using an 8.25-inch ID/14-inch OD hollow-stem auger, drill through the zone of contamination to a depth approximately four feet below the estimated depth of contamination as determined from the geovoxel subsurface uranium contamination model. Raise the auger string approximately one foot to vacate the bottom of the boring. Pump a bentonite-based sealer (Hole-Seal) into the bottom of the boring to form an approximately 3-foot thick column of sealer. Allow the sealer to hydrate for at least one-hour. After the sealer has hydrated, the 8.25-inch ID/14-inch OD hollow-stem auger can be used as a temporary casing for the contaminated section of the boring. Prior to placing the bentonite-based sealer in the bottom of the boring, depth to bottom should be measured to confirm that the bore hole has not collapsed.

A 3.25-inch ID/6.625-inch OD hollow-stem auger string will be used to drill inside the 8.25-inch ID/14-inch OD hollow-stem auger and the through the column of sealer to the full depth of the boring (see Figure H-1 for a schematic showing the steps involved in using a hollow-stem auger as a temporary casing).

After all drilling and sampling efforts have been completed for the boring, the 3.25-inch ID/6.625-inch OD hollow-stem auger string will pulled from the boring and the resulting hole will be plugged with volclay. Once the 6.625-inch diameter boring hole has been fully grouted and the 3.25-inch ID/6.625-inch OD hollow-stem auger string has been pulled from the boring, the 8.25-inch ID/14-inch OD hollow-stem auger string will be pulled and the resulting 14-inch diameter boring hole will be plugged using volclay grout.

Note: This methodology is only to used at locations were subsurface uranium contamination is greater than 3 feet in depth.

FIGURE H-1

HOLLOW-STEM AUGER AS TEMPORARY CASING SCHEMATIC

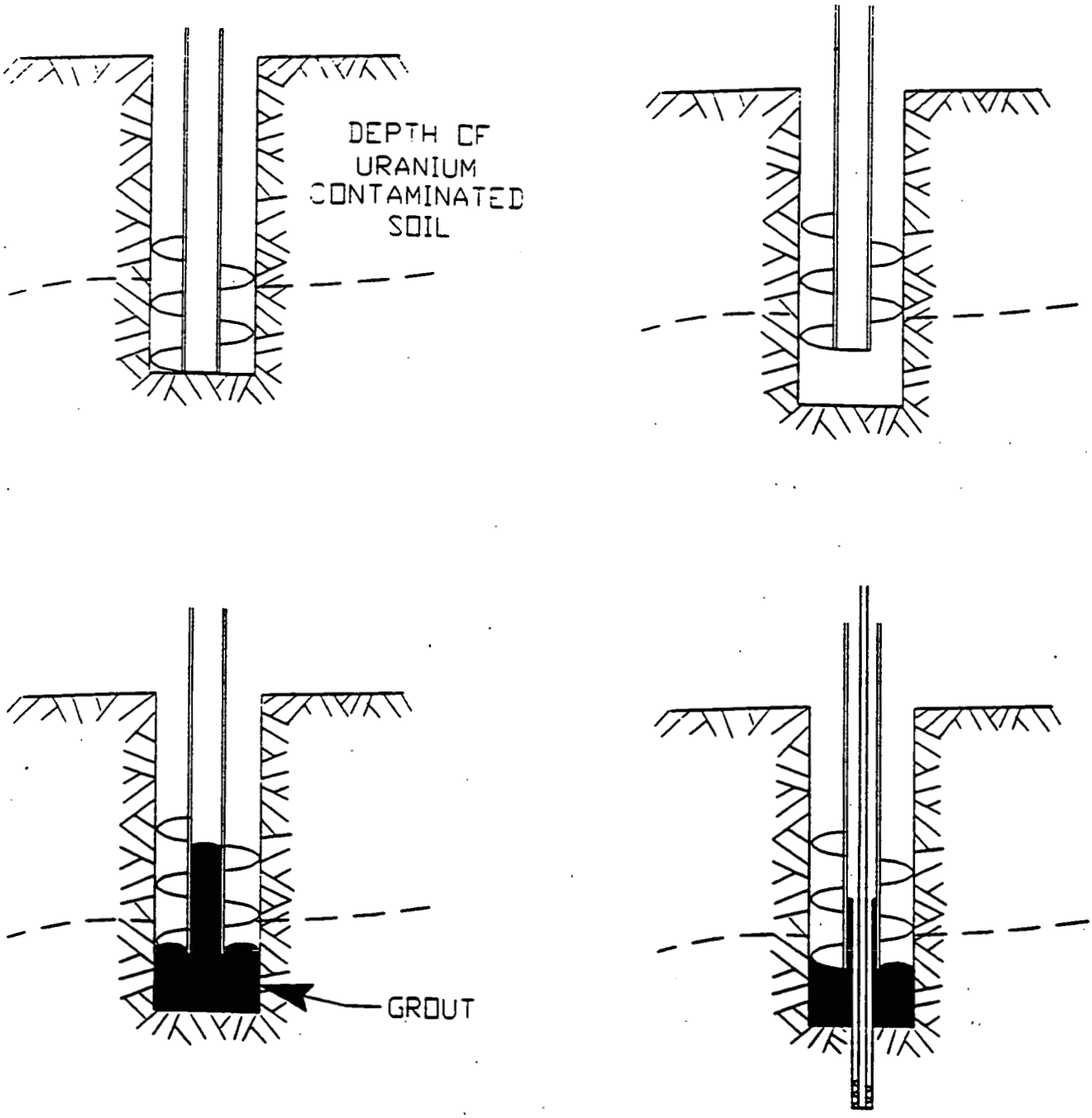

APPENDIX I

ASTM STANDARDS

ASTM STANDARDS

Test No.	Title
D420	Standard Guide for Investigating and Sampling Soil and Rock
D421	Standard Practice for Dry Preparation of Soil Samples for Particle-Size Analysis Determination of Soil Constants
D422	Standard Test Method for Particle Size Analysis for Soils
D698	Test Method for Laboratory Compaction Characteristics of Soil Using Standard Effort
D854	Standard Test Method for Specific Gravity of Soils
D1452	Standard Practice for Soil Investigation and Sampling by Auger Borings
D1586	Standard Test Method for Penetration Test and Split-Barrel Sampling of Soils
D1587	Standard Practice for Thin-Walled Tube Sampling of Soils
D2166	Standard Test Method for Unconfined Compressive Strength of Cohesive Soil
D2216	Standard Test Methods for Laboratory Determination of Water (Moisture) Content of Soil and Rock
D2217	Standard Practice for Wet Preparation of Soil Samples for Particle-Size Analysis and Determination of Soil Constants
D2434	Standard Test Method for Permeability of Granular Soils (Constant Head)
D2487	Standard Classification of Soils for Engineering Purposes (Unified Soil Classification System)
D2488	Standard Practice for Description and Identification of Soils (Visual-Manual Procedure)
D3080	Standard Test Method for Direct Shear Test of Soils Under Consolidated Drained Conditions
D3550	Standard Practice for Ring-Lines Barrel Sampling of Soils
D4220	Standard Practices for Preserving and Transporting Soil Samples
D4318	Standard Test Method for Liquid Limit, Plastic Limit, and Plasticity Index of Soils
D4767	Standard Test Method for Consolidated-Undrained Triaxial Compressive Test on Cohesive Soils
D5084	Standard Test Method for Measurement of Hydraulic Conductivity of Saturated Porous Materials Using a Flexible Wall
D5299	Standard Guide for Decommissioning of Ground Water Wells, Vadose Zone Monitoring Devices, Boreholes, and Other Devices for Environmental Activities

Designation: D 420 – 87

Standard Guide for Investigating and Sampling Soil and Rock[1]

This standard is issued under the fixed designation D 420; the number immediately following the designation indicates the year of original adoption or, in the case of revision, the year of last revision. A number in parentheses indicates the year of last reapproval. A superscript epsilon (ε) indicates an editorial change since the last revision or reapproval.

INTRODUCTION

Investigation, sampling, and identification of subsurface materials involve complex techniques accomplished by many different procedures and interpretations. These are frequently site specific and are influenced by geological and geographical conditions; purpose of the investigation; design requirements; and the background, training, and experience of the investigator.

This guide for soil, rock, and ground water investigation and sampling, based on standard procedures, will lessen inconsistency and will encourage rational methods of site evaluation. An acceptable and consistent investigation and sampling program will help to determine the influence of geologic and geographic environment on subsurface conditions.

1. Scope

1.1 This guide identifies recognized methods by which soil, rock, and ground water conditions may be determined. The objective of the investigation should be to identify and locate, both horizontally and vertically, significant soil and rock types and ground water conditions present within a given site area and to establish the characteristics of the subsurface materials by sampling and in situ testing. Laboratory testing of soil and rock samples is governed by other ASTM standards.

1.2 *Key Words:*

1.2.1 *Site Investigations (see Practice D 3584):*

UF Reconnaissance Surveys
- Subsurface Investigations
- Geological Investigations
- Field Investigations

BT Explorations
- Feasibility Studies

NT *Hydrologic Investigations*
- Foundation Investigations
- Geophysical Investigation

RT Soil Surveys
- Maps
- Preliminary Investigations
- Sampling

1.3 The values stated in inch-pound units are to be regarded as the standard.

2. Referenced Documents

2.1 *ASTM Standards:*

C 119 Definitions of Terms Relating to Dimension Stone[2]

C 294 Descriptive Nomenclature of Constituents of Natural Mineral Aggregates[3]

C 851 Practice for Estimating Scratch Hardness of Coarse Aggregate Particles[3]

D 75 Practice for Sampling Aggregates[2]

D 653 Terminology Relating to Soil, Rock, and Contained Fluids[2]

D 1194 Test Method for Bearing Capacity of Soil for Static Load on Spread Footings[2]

D 1452 Practice for Soil Investigation and Sampling by Auger Borings[2]

D 1586 Method for Penetration Test and Split-Barrel Sampling of Soils[2]

D 1587 Practice for Thin-Walled Tube Sampling of Soils[2]

D 2113 Practice for Diamond Core Drilling for Site Investigation[2]

D 2487 Test Method for Classification of Soils for Engineering Purposes[2]

D 2488 Practice for Description and Identification of Soils (Visual-Manual Procedure)[2]

D 2573 Test Method for Field Vane Shear Test in Cohesive Soil[2]

D 2607 Classification of Peats, Mosses, Humus, and Related Products[2]

D 2937 Test Method for Density of Soil In Place by the Drive-Cylinder Method[2]

D 3282 Practice for Classification of Soils and Soil-Aggregate Mixtures for Highway Construction Purposes[2]

D 3385 Test Method for Infiltration Rate of Soils in Field Using Double-Ring Infiltrometers[2]

D 3397 Methods for Triaxial Classification of Base Materials, Soils, and Soil Mixtures[4]

D 3441 Test Method for Deep, Quasi-Static, Cone and Friction-Cone Penetration Tests of Soil[2]

D 3550 Practice for Ring-Lined Barrel Sampling of Soils[2]

[1] This guide is under the jurisdiction of ASTM Committee D-18 on Soil and Rock and is the direct responsibility of Subcommittee D18.01 on Surface and Subsurface Reconnaissance.

Current edition approved Aug. 19, 1987. Published October 1987. Originally published as D 420 – 65 T. Last previous edition D 420 – 69 (1979)[ε1].

[2] *Annual Book of ASTM Standards*, Vol 04.08.

[3] *Annual Book of ASTM Standards*, Vol 04.02.

[4] *Annual Book of ASTM Standards*, Vol 04.03.

D 3584 Practice for Indexing Papers and Reports on Soil and Rock for Engineering Purposes[2]
D 3740 Practice for the Evaluation of Agencies Engaged in the Testing and/or Inspection of Soil and Rock as Used in Engineering Design and Construction[2]
D 4083 Practice for Description of Frozen Soils (Visual-Manual Procedure)[2]
D 4220 Practices for Preserving and Transporting Soil Samples[2]
D 4427 Classification of Peat Samples by Laboratory Testing[2]
G 51 Test Method for pH of Soil for Use in Corrosion Testing[2]
G 57 Method for Field Measurement of Soil Resistivity Using the Wenner Four-Electrode Method[2]

3. Significance and Use

3.1 An adequate soil, rock, and ground water investigation provides pertinent information for decision making on one or more of the following subjects:

3.1.1 Location of the proposed construction both vertically and horizontally.

3.1.2 Location and preliminary evaluation of suitable borrow and other local sources of construction material.

3.1.3 Need for special excavating and dewatering techniques.

3.1.4 Investigations of slope stability in natural slopes, cuts, and embankments.

3.1.5 Conceptual selection of embankment types, foundations for structures, and hydraulic barrier requirements.

3.1.6 Ground water resource planning and development of detailed investigations.

3.1.7 Identification of ground water contamination and development of detailed monitoring studies.

3.1.8 Development of additional detailed subsurface investigations for specific structures or facilities.

3.2 A subsurface soil, rock, and ground water investigation should provide sufficiently large soil and rock samples of such quality as to allow adequate testing to determine the soil or rock classification or mineralogic type, or both, and the engineering properties pertinent to the proposed design.

3.3 This guide is not meant to be an inflexible description of investigation requirements; other techniques may be applied as appropriate.

4. Apparatus

4.1 The type of equipment required for a subsurface investigation depends upon various factors including the type of subsurface material, the depth of exploration, the nature of the terrain, and the intended use of the data.

4.2 *Hand Augers, Hole Diggers, Shovels, and Push Tube Samplers*, suitable for exploration of surficial soils to depths of 3 to 9 ft (1 to 3 m).

4.3 *Earth Excavation Equipment*, such as backhoes, draglines, and drilled pier augers (screw or bucket) to allow in situ examination of soil deposits and sampling of materials containing very large particles.

5. Techniques

5.1 Geophysical or remote sensing techniques may be used for mapping of the areal extent of geological formations and for evaluating variations in soil and rock properties.

5.1.1 Satellite and aircraft spectral mapping tools, such as LANDSAT, may be used to find and map the areal extent subsurface materials and geologic structure. Interpretati aircraft photographs and satellite imagery may locate identify significant geologic features that may be indicative of faults and fractures. Some ground control is generally required to verify information derived from remote sensing data. Table 13.8 of Ref. (**1**)[5] is a useful summary of remote sensing capabilities.

5.1.2 Seismic refraction/reflection and ground penetrating radar techniques may be used to map soil horizons and depth profiles, water tables, and depth to bedrock in many situations, with depth penetration and resolution varying with local conditions. Electromagnetic induction, electrical resistivity, and induced polarization (or complex resistivity) techniques may be used to map variations in water content and quality, clay horizons, stratification, and depth to aquifer/bedrock. Other geophysical techniques such as gravity and magnetic methods may be useful under certain specific conditions. Crosshole shear wave velocity measurements may provide soil and rock parameters for dynamic analyses.

5.4 Currently available ASTM standards on boring and sampling are:

5.4.1 Practice D 1452 on auger boring.
5.4.2 Method D 1586 on standard penetration test.
5.4.3 Practice D 1587 on thin walled tube sampling.
5.4.4 Practice D 2113 on diamond core drilling.
5.4.5 Test Method D 2573 on field vane shear test.
5.4.6 Test Method D 3385 on double ring infiltrom
5.4.7 Method D 3441 on cone penetration tests.
5.4.8 Practice D 3550 on ring-lined barrel sampling.

6. Exploration Plan

6.1 The project design and performance requirements must be established prior to final development of the exploration plan. A complete soil, rock, and ground water investigation should encompass the following activities:

6.1.1 Review of available information on the geologic history, rock, soil, and ground water conditions occurring at the proposed location and in the immediate vicinity of the site.

6.1.2 Interpretation of air-photo and other remote sensing data.

6.1.3 Field reconnaissance for identification of surficial geologic conditions, mapping of stratigraphic exposures and outcrops, and examination of the performance of existing structures.

6.1.4 On site investigation of the surface and subsurface materials by geophysical surveys, borings, or test pits.

6.1.5 Recovery of representative disturbed samples for laboratory classification tests of soil, rock, and local construction material. These should be supplemented by undisturbed specimens suitable for the determination of those engineering properties pertinent to the investigation.

6.1.6 Determination of the position of the ground water table, or water tables if there is perched or artesian gro

[5] The boldface numbers in parentheses refer to the list of referenc end of this standard.

146

water, and of the variability of that position in both short and long time frames.

6.1.7 Determination of the location of suitable foundation material, either bedrock or satisfactory load-bearing soils.

6.1.8 Field identification of soil and rock types with the depth of their occurrence and the locations of their structural discontinuities.

6.1.9 Evaluation of the performance of existing installations, relative to their foundation material and environment in the immediate vicinity of the proposed site.

7. Reconnaissance of Project Area

7.1 Technical data should be reviewed before any field program is started. This includes, but is not limited to, topographic maps, airphotos, satellite imagery, geologic maps, statewide or county soil surveys and mineral resource surveys, and engineering soil maps covering the proposed project area. Reports of subsurface investigations of nearby or adjacent projects should be studied.

NOTE 1—While certain of the older maps and reports may be obsolete and of limited value in the light of current knowledge, a comparison of the old with the new will often reveal valuable unexpected information.

7.1.1 The United States Geological Survey and the geological surveys of the various states are the principal sources of geologic maps and reports on mineral resources and ground water.

7.1.2 United States Department of Agriculture Soil Conservation Service soil survey reports, where available and of recent date, should enable the engineer to estimate the range in soil profile characteristics to depths of 5 or 6 ft (1.5 or 2 m) for each soil mapped.

NOTE 2—Each soil type has a distinctive soil profile due to age, parent material, relief, climatic condition, and vegetative cover. These properties can assist in identifying the various soil types, each requiring special engineering considerations and treatment. Similar engineering soil properties are often found where similar soil profile characteristics exist. Changes in soil properties in adjacent areas often indicate changes in parent material or relief.

7.2 In areas where descriptive data are limited by inadequate geologic or soils maps, the soil and rock in open cuts in the vicinity of the proposed project should be studied and various soil and rock profiles noted. Field notes of such studies should include data outlined in 8.4.

7.3 Where a preliminary map covering the area of the project is desired, it can be prepared on maps compiled from airphotos showing the ground conditions. The distribution of the predominant soil and rock deposits likely to be encountered during the investigation may be shown using data obtained from geologic maps and limited ground reconnaissance. Experienced airphoto interpreters can deduce much subsurface data from a study of black and white, color, and infrared photographs because similar soil or rock conditions, or both, usually have similar airphoto patterns in regions of similar climate or vegetation.

7.4 In areas where documentary information is insufficient, some knowledge of subsurface conditions can be obtained from land owners and local well drillers and construction people.

NOTE 3—This preliminary map may be expanded into a detailed engineering map by locating all test holes, pits, and sampling stations and by revising boundaries as determined from the detailed subsurface survey.

8. Determination of Subsurface Conditions

8.1 Subsurface conditions are positively defined only at the individual test pit, hole, boring, or open cut examined. A stratigraphic profile can be developed by detailed investigations only where determinations of a continuous relationship of the depths and locations of various types of soil and rock can be made. This phase of the investigation may be implemented by plotting logs of soil and rock exposures in walls of excavations or cut areas or by plotting logs of the test borings, or both, and then interpolating between these logs. The spacing of these investigations will depend on the geologic complexity of the project area and on the importance of soil and rock continuity to the project design. Exploration should be deep enough to identify all strata that might be significantly affected by the proposed use of the site and to develop the engineering data required to allow analysis of the items listed in Section 3 for each project.

8.2 Geophysical survey methods may be used to supplement borehole and outcrop data and to interpolate between holes. Seismic, ground penetrating radar, and electrical resistivity methods can be particularly valuable when distinct differences in the properties of contiguous subsurface materials are indicated.

8.2.1 The seismic refraction method is especially useful in determining depth to, or rippability of, rock in locations where successively denser strata are encountered.

8.2.2 The seismic reflection method is useful in delineating geological units at depths below 10 ft (3 m). It is not constrained by layers of low seismic velocity and is especially useful in areas of rapid stratigraphic change.

8.2.3 The electrical resistivity method is similarly useful in determining depth to rock and anomalies in the stratigraphic profile, in evaluating stratified formations where a denser stratum overlies a less dense stratum, and in investigation of prospective sand-gravel or other sources of borrow material. Resistivity parameters also are required for the design of grounding systems and cathodic protection for buried structures.

8.2.4 The ground penetrating radar method is useful in defining soil and rock layers and manmade structures in the depth range of 1 to 30 ft (⅓ to 10 m).

NOTE 4—Geophysical investigations can be a useful guide in determining boring or test hole locations. The interpretation of geophysical studies should be verified by borings or test excavations.

8.3 The depth of exploratory borings or test pits for roadbeds, airport paving, or vehicle parking areas should be to at least 5 ft (1.5 m) below the proposed subgrade elevation. Special circumstances may increase this depth. Borings for structures or embankments should extend below the level of significant influence of the proposed load as determined by a subsurface stress analysis.

8.3.1 When drainage may be influenced by either pervious water-bearing materials or impervious materials that can block internal drainage, borings should extend down into these materials sufficiently to determine those engineering and geologic properties relevant to the project design.

8.3.2 In all borrow areas the borings or test pits should be sufficient in number and depth to outline the required quantities of material meeting the specified quality requirements.

8.3.3 Where frost penetration must be considered in the behavior of soil and rock, borings should extend significantly below the depth of maximum frost penetration.

8.4 Exploration records shall be kept in a systematic manner for each project. Such records shall include:

8.4.1 Description of each site or area investigated. Each test hole, boring, test pit, or geophysical test site shall be clearly located (horizontally and vertically) with reference to some established coordinate system, datum, or permanent monument.

8.4.2 Logs of each test hole, boring, test pit, or cut surface exposure in which the field description and location of each material encountered is clearly shown either by symbol or word description.

NOTE 5—Color photographs of rock cores, soil samples, and exposed strata may be of considerable value. Each photograph should include an identifying number or symbol, a date, and a scale.

8.4.3 Identification of all soils based on Practice D 2488, Classification D 2607, or Practice D 4083. Identification of rock materials based on Definitions of Terms C 119, Descriptive Nomenclature C 294, or Practice C 851. Classification of soil materials is discussed in Section 10.

8.4.4 Seepage and water-bearing zones and piezometric elevations found in each test hole, boring, or test pit.

8.4.5 In situ test results, where required, such as the penetration resistance or vane shear tests discussed in 9.3, plate load tests, or other in situ tests for engineering properties of soils or rock.

8.4.6 Percentage of core recovery and rock quality designation in core drilling as outlined in 9.3.5.

8.4.7 Graphical presentation of field and laboratory data and its interpretation facilitates comprehensive understanding of subsurface conditions.

9. Sampling and In Situ Testing

9.1 Obtain representative samples of each subsurface material that is significant to the project design and construction. The size and type of sample required is dependent upon the tests to be performed and the percentage of coarse particles in the sample.

NOTE 6—The size of disturbed or bulk samples for routine tests may vary at the discretion of the geotechnical investigator, but the following quantities are suggested as suitable for most materials: (*a*) Visual classification—50 to 500 g (2 oz to 1 lb); (*b*) Soil constants and particle size analysis of non-gravelly soil—500 g to 2.5 kg (1 to 5 lb); (*c*) Soil compaction tests and sieve analysis of gravelly soils—20 to 40 kg (40 to 80 lb); (*d*) Aggregate manufacture or aggregate properties tests—50 to 200 kg (100 to 400 lb).

9.2 Accurately identify each sample with the boring, test hole, or testpit number and depth below reference ground surface from which it was taken. Place a waterproof identification tag inside the container, securely close the container, protect it to withstand rough handling, and mark it with proper identification on the outside. Keep samples for natural moisture determination in sealed containers to prevent moisture loss. When drying of samples may affect classification or engineering properties test results, protect them to minimize moisture loss. Practices D 4220 address the transportation of samples from field to laborator

9.3 Recommended ASTM procedures for in situ g and testing are as follows:

9.3.1 Practice D 75 describes the sampling of coarse and fine aggregates for the preliminary investigation of a potential source of supply.

9.3.2 Test Method D 1194 describes the estimation of the bearing capacity of soil in place by means of field loading tests. The results can be useful for design of spread footings based on static loading conditions. The load test should be performed in conjunction with other field tests, generally in accordance with Method D 1586 or Method D 3441, to allow a determination of the applicability of the results.

9.3.3 Practice D 1452 describes the use of augers in soil investigations and sampling where disturbed soil samples can be used. This procedure is also valuable in connection with ground water exploration. Depths of auger investigations are limited by ground water conditions, soil characteristics, and equipment used.

9.3.4 Method D 1586 describes a procedure to obtain representative soil samples for identification and classification laboratory tests and to measure the resistance of the soil to penetration by a standardized sampler.

9.3.5 Practice D 1587 describes a procedure to recover relatively undisturbed soil samples suitable for laboratory testing.

9.3.6 Practice D 2113 describes a procedure to recover intact samples of rock and certain soils too hard to sample by Method D 1586 or Practice D 1587.

9.3.7 Practice D 3550 describes a procedure to moderately disturbed, representative samples of soil for classification testing and in some cases shear or consolidation testing.

9.3.8 Test Method D 2573 describes a procedure to measure the in situ unit shear resistance of cohesive soils by rotation of a four-bladed vane in a horizontal plane.

9.3.9 Test Method D 2937 describes a procedure for pushing a thin-wall tube 4 to 6 in. (100 to 150 mm) into a soil mass to recover a relatively undisturbed sample of known volume allowing the measurement of wet or total density and natural moisture content.

9.3.10 Test Method D 3385 describes a procedure for field measurement of the infiltration rate of soils. Water under a constant head is allowed to seep into the top surface of a fixed soil area and the volume rate of inflow into a known volume of soil is measured.

9.3.11 Method D 3441 describes the determination of the end bearing and side friction components of the resistance to penetration of a conical penetrometer into a soil mass.

9.3.12 Method G 57 describes the measurement of the electrical resistivity of a soil mass. A Wenner four-electrode configuration is used.

NOTE 7—Other in situ test procedures are being prepared by ASTM Committee D-18.

10. Classification of Earth Materials

10.1 Identify samples of soil and rock after submi the laboratory for identification and classification n accordance with one or more of the following standards or applicable references (**2 through 11**), or both.

148

10.1.1 Descriptive Nomenclature 294.
10.1.2 Test Method D 2487.
10.1.3 Practice D 3282.
10.1.4 Method D 3397.
10.1.5 Practice D 2488.
10.1.6 Practice D 4083.
10.1.7 Classification D 4427.

11. Subsurface Profile

11.1 Delineate subsurface profiles only from actual geophysical, test-hole, test-pit, or cut-surface data. Interpolation between locations should be made on the basis of available geologic knowledge of the area and should be clearly identified. The use of geophysical techniques as discussed in 8.2 is a valuable aid in such interpolation. Geophysical survey data should be identified separately from sample data or in situ test data.

12. Interpretation of Results

12.1 Interpret the results of an investigation in terms of actual findings and make every effort to collect and include all field and laboratory data from previous investigations in the same area. Extrapolation of data into local areas not surveyed and tested should be made only for conceptual studies. Such extrapolation can be done only where geologically uniform subsurface disposition of soil and rock is known to exist on the basis of other data. Engineering properties of the soil and rock encountered on important projects should not be predicted solely on field identification or classification but should be verified by laboratory tests made on samples collected in accordance with Section 9 or by in situ testing, or both.

12.2 The recommendations for design parameters can be made only by professional engineers or geologists specializing in the field of geotechnical engineering and familiar with the purpose, conditions, and requirements of the study. Soil mechanics, rock mechanics, and geomorphological concepts must be combined with a knowledge of geotechnical engineering or hydrogeology to make a complete application of the results of the soil, rock, and ground water investigation. Complete design recommendations may require a more detailed study than that envisioned by this guide.

13. Report

13.1 The report of a subsurface investigation shall include:

13.1.1 Location of the area investigated in terms pertinent to the project. This may include sketch maps or aerial photos on which the test pits, bore holes, and sample areas are located, as well as geomorphological data relevant to the determination of the various soil and rock types. Such data includes elevation contours, streambeds, sink holes, cliffs, and the like. Where feasible, include in the report a geologic map or an agronomic soils map, or both, of the area investigated.

13.1.2 Describe the investigation procedures and include copies of all borings and testhole logs, all laboratory test results, and graphical interpretations of the geophysical measurements.

13.1.3 Include cross sections delineating the extent of the stratigraphic units and note anomalies or otherwise significant conditions.

13.1.4 Describe and relate the findings obtained under Sections 7, 8, and 12, using the subhead titles for the respective sections.

14. Precision and Bias

14.1 This guide provides qualitative data only; therefore, a precision and bias statement is not applicable.

REFERENCES

(1) Reeves, R. G., Anson, A., and Landen, D., eds., *Manual of Remote Sensing*, 2nd Ed., American Society of Photogrametry, Falls Church, VA.
(2) Hvorslev, M. J., "Subsurface Exploration and Sampling of Soils," Engineering Foundation, New York, 1948.
(3) "Classification of Rocks," Colorado School of Mines, Vol. 50, No. 1, 1955.
(4) Higgins, M. W., "Cataclastic Rocks," U.S. Geological Survey Professional Paper 687, 1971.
(5) Howell, J. V., and Weller, J. M., eds., "Glossary of Geology," American Geological Institute, Washington, DC, 1972.
(6) Wahls, H. E., ed., "In Situ Measurement of Soil Properties," *Proc. Specialty Conference of the Geotechnical Engineering Division*, ASCE, NC State Univ., Raleigh, NC, 1975.
(7) ASCE Manual No. 56, "Subsurface Investigation for Design and Construction of Foundations of Buildings," American Society of Civil Engineers, New York, NY, 1976.
(8) Dowding, C. H., ed., "Site Characterization and Exploration," *Proc. Specialty Workshop*, ASCE, Northwestern Univ., Evanston, IL, 1978.
(9) Mori, H., ed., "State of the Art on Current Practice of Soil Sampling," *Proc. International Symposium of Soil Sampling*, Int. Soc. Soil Mech. and Foundation Engineering, New York, NY, 1979.
(10) Alsud, S. A., "Engineering Geophysics," Bul. AEG, Vol. XIX, No. 2, 1982.
(11) Trautman, C. H., and Kulhawy, F. H., "Data Sources for Engineering Geologic Studies," Bul. AEG, Vol. XX, No. 4, 1983.

The American Society for Testing and Materials takes no position respecting the validity of any patent rights asserted in connection with any item mentioned in this standard. Users of this standard are expressly advised that determination of the validity of any such patent rights, and the risk of infringement of such rights, are entirely their own responsibility.

This standard is subject to revision at any time by the responsible technical committee and must be reviewed every five years and if not revised, either reapproved or withdrawn. Your comments are invited either for revision of this standard or for additional standards and should be addressed to ASTM Headquarters. Your comments will receive careful consideration at a meeting of the responsible technical committee, which you may attend. If you feel that your comments have not received a fair hearing you should make your views known to the ASTM Committee on Standards, 1916 Race St., Philadelphia, PA 19103.

Designation: D 421 – 85

Standard Practice for Dry Preparation of Soil Samples for Particle-Size Analysis and Determination of Soil Constants[1]

This standard is issued under the fixed designation D 421; the number immediately following the designation indicates the year of original adoption or, in the case of revision, the year of last revision. A number in parentheses indicates the year of last reapproval. A superscript epsilon (ε) indicates an editorial change since the last revision or reapproval.

1. Scope

1.1 This practice covers the dry preparation of soil samples as received from the field for particle-size analysis and the determination of the soil constants.

1.2 *This standard may involve hazardous materials, operations, and equipment. This standard does not purport to address all of the safety problems associated with its use. It is the responsibility of whoever uses this standard to consult and establish appropriate safety and health practices and determine the applicability of regulatory limitations prior to use.*

2. Referenced Documents

2.1 *ASTM Standards:*

D 2217 Practice for Wet Preparation of Soil Samples for Particle-Size Analysis and Determination of Soil Constants[2]

E 11 Specification for Wire-Cloth Sieves for Testing Purposes[3]

3. Significance and Use

3.1 This practice can be used to prepare samples for particle-size and plasticity tests where it is desired to determine test values on air-dried samples, or where it is known that air drying does not have an effect on test results relative to samples prepared in accordance with Practice D 2217.

4. Apparatus

4.1 *Balance*, sensitive to 0.1 g.

4.2 *Mortar and Rubber-Covered Pestle*, suitable for breaking up the aggregations of soil particles.

4.3 *Sieves*—A series of sieves, of square mesh woven wire cloth, conforming to Specification E 11. The sieves required are as follows:

No. 4 (4.75-mm)
No. 10 (2.00-mm)
No. 40 (425-μm)

4.4 *Sampler*—A riffle sampler or sample splitter, for quartering the samples.

5. Sampling

5.1 Expose the soil sample as received from the field to the air at room temperature until dried thoroughly. Break up the aggregations thoroughly in the mortar with a rubber-covered pestle. Select a representative sample of the amount required to perform the desired tests by the method of quartering or by the use of a sampler. The amounts of material required to perform the individual tests are as follows:

5.1.1 *Particle-Size Analysis*—For the particle-size analysis, material passing a No. 10 (2.00-mm) sieve is required in amounts equal to 115 g of sandy soils and 65 g of either silt or clay soils.

5.1.2 *Tests for Soil Constants*—For the tests for soil constants, material passing the No. 40 (425-μm) sieve is required in total amount of 220 g, allocated as follows:

Test	Grams
Liquid limit	100
Plastic limit	15
Centrifuge moisture equivalent	10
Volumetric shrinkage	30
Check tests	65

6. Preparation of Test Sample

6.1 Select that portion of the air-dried sample selected for purpose of tests and record the mass as the mass of the total test sample uncorrected for hygroscopic moisture. Separate the test sample by sieving with a No. 10 (2.00-mm) sieve. Grind that fraction retained on the No. 10 sieve in a mortar with a rubber-covered pestle until the aggregations of soil particles are broken up into the separate grains. Then separate the ground soil into two fractions by sieving with a No. 10 sieve.

6.2 Wash that fraction retained after the second sieving free of all fine material, dry, and weigh. Record this mass as the mass of coarse material. Sieve the coarse material, after being washed and dried, on the No. 4 (4.75-mm) sieve and record the mass retained on the No. 4 sieve.

7. Test Sample for Particle-Size Analysis

7.1 Thoroughly mix together the fractions passing the No. 10 (2.00-mm) sieve in both sieving operations, and by the method of quartering or the use of a sampler, select a portion weighing approximately 115 g for sandy soils and approximately 65 g for silt and clay soil for particle-size analysis.

8. Test Sample for Soil Constants

8.1 Separate the remaining portion of the material passing the No. 10 (2.00-mm) sieve into two parts by means of a No. 40 (425-μm) sieve. Discard the fraction retained on the No. 40 sieve. Use the fraction passing the No. 40 sieve for the determination of the soil constants.

[1] This practice is under the jurisdiction of ASTM Committee D-18 on Soil and Rock and is the direct responsibility of Subcommittee D18.03 on Texture, Plasticity, and Density Characteristics of Soils.

Current edition approved July 26, 1985. Published September 1985. Originally published as D 421 – 35 T. Last previous edition D 421 – 58 (1978)[ε1].

[2] *Annual Book of ASTM Standards*, Vol 04.08.

[3] *Annual Book of ASTM Standards*, Vol 14.02.

150

The American Society for Testing and Materials takes no position respecting the validity of any patent rights asserted in connection with any item mentioned in this standard. Users of this standard are expressly advised that determination of the validity of any such patent rights, and the risk of infringement of such rights, are entirely their own responsibility.

This standard is subject to revision at any time by the responsible technical committee and must be reviewed every five years and if not revised, either reapproved or withdrawn. Your comments are invited either for revision of this standard or for additional standards and should be addressed to ASTM Headquarters. Your comments will receive careful consideration at a meeting of the responsible technical committee, which you may attend. If you feel that your comments have not received a fair hearing you should make your views known to the ASTM Committee on Standards, 1916 Race St., Philadelphia, PA 19103.

151

Designation: D 422 - 63 (Reapproved 1990)$^{\epsilon 1}$

Standard Test Method for Particle-Size Analysis of Soils[1]

This standard is issued under the fixed designation D 422; the number immediately following the designation indicates the year of original adoption or, in the case of revision, the year of last revision. A number in parentheses indicates the year of last reapproval. A superscript epsilon (ε) indicates an editorial change since the last revision or reapproval.

$^{\epsilon 1}$ NOTE—Section 19 was added editorially in September 1990.

1. Scope

1.1 This test method covers the quantitative determination of the distribution of particle sizes in soils. The distribution of particle sizes larger than 75 µm (retained on the No. 200 sieve) is determined by sieving, while the distribution of particle sizes smaller than 75 µm is determined by a sedimentation process, using a hydrometer to secure the necessary data (Notes 1 and 2).

NOTE 1—Separation may be made on the No. 4 (4.75-mm), No. 40 (425-µm), or No. 200 (75-µm) sieve instead of the No. 10. For whatever sieve used, the size shall be indicated in the report.

NOTE 2—Two types of dispersion devices are provided: (*1*) a high-speed mechanical stirrer, and (*2*) air dispersion. Extensive investigations indicate that air-dispersion devices produce a more positive dispersion of plastic soils below the 20-µm size and appreciably less degradation on all sizes when used with sandy soils. Because of the definite advantages favoring air dispersion, its use is recommended. The results from the two types of devices differ in magnitude, depending upon soil type, leading to marked differences in particle size distribution, especially for sizes finer than 20 µm.

2. Referenced Documents

2.1 *ASTM Standards:*

D421 Practice for Dry Preparation of Soil Samples for Particle-Size Analysis and Determination of Soil Constants[2]

E 11 Specification for Wire-Cloth Sieves for Testing Purposes[3]

E 100 Specification for ASTM Hydrometers[4]

3. Apparatus

3.1 *Balances*—A balance sensitive to 0.01 g for weighing the material passing a No. 10 (2.00-mm) sieve, and a balance sensitive to 0.1 % of the mass of the sample to be weighed for weighing the material retained on a No. 10 sieve.

3.2 *Stirring Apparatus*—Either apparatus A or B may be used.

3.2.1 Apparatus A shall consist of a mechanically operated stirring device in which a suitably mounted electric motor turns a vertical shaft at a speed of not less than 10 000 rpm without load. The shaft shall be equipped with a replaceable stirring paddle made of metal, plastic, or hard rubber, as shown in Fig. 1. The shaft shall be of such length that the stirring paddle will operate not less than ¾ in. (19.0 mm) nor more than 1½ in. (38.1 mm) above the bottom of the dispersion cup. A special dispersion cup conforming to either of the designs shown in Fig. 2 shall be provided to hold the sample while it is being dispersed.

3.2.2 Apparatus B shall consist of an air-jet dispersion cup[5] (Note 3) conforming to the general details shown in Fig. 3 (Notes 4 and 5).

NOTE 3—The amount of air required by an air-jet dispersion cup is of the order of 2 ft^3/min; some small air compressors are not capable of supplying sufficient air to operate a cup.

NOTE 4—Another air-type dispersion device, known as a dispersion tube, developed by Chu and Davidson at Iowa State College, has been shown to give results equivalent to those secured by the air-jet dispersion cups. When it is used, soaking of the sample can be done in the sedimentation cylinder, thus eliminating the need for transferring the slurry. When the air-dispersion tube is used, it shall be so indicated in the report.

NOTE 5—Water may condense in air lines when not in use. This water must be removed, either by using a water trap on the air line, or by blowing the water out of the line before using any of the air for dispersion purposes.

3.3 *Hydrometer*—An ASTM hydrometer, graduated to read in either specific gravity of the suspension or grams per litre of suspension, and conforming to the requirements for hydrometers 151H or 152H in Specifications E 100. Dimensions of both hydrometers are the same, the scale being the only item of difference.

3.4 *Sedimentation Cylinder*—A glass cylinder essentially 18 in. (457 mm) in height and 2½ in. (63.5 mm) in diameter, and marked for a volume of 1000 mL. The inside diameter shall be such that the 1000-mL mark is 36 ± 2 cm from the bottom on the inside.

3.5 *Thermometer*—A thermometer accurate to 1°F (0.5°C).

3.6 *Sieves*—A series of sieves, of square-mesh woven-wire cloth, conforming to the requirements of Specification E 11. A full set of sieves includes the following (Note 6):

[1] This test method is under the jurisdiction of ASTM Committee D-18 on Soil and Rock and is the direct responsibility of Subcommittee D18.03 on Texture, Plasticity, and Density Characteristics of Soils.

Current edition approved Nov. 21, 1963. Originally published 1935. Replaces D 422 - 62.

[2] *Annual Book of ASTM Standards*, Vol 04.08.

[3] *Annual Book of ASTM Standards*, Vol 14.02.

[4] *Annual Book of ASTM Standards*, Vol 14.03.

[5] Detailed working drawings for this cup are available at a nominal cost from the American Society for Testing and Materials, 1916 Race St., Philadelphia, PA 19103. Order Adjunct No. 12-404220-00.

152

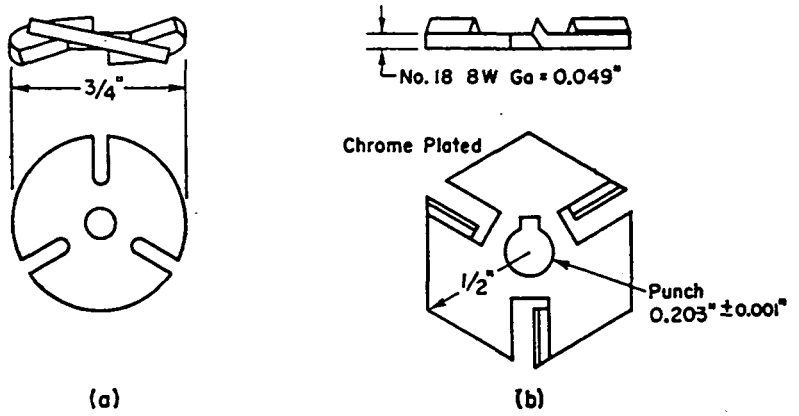

Metric Equivalents					
in.	0.001	0.049	0.203	½	¾
mm	0.03	1.24	5.16	12.7	19.0

FIG. 1 Detail of Stirring Paddles

3-in. (75-mm)	No. 10 (2.00-mm)
2-in. (50-mm)	No. 20 (850-µm)
1½-in. (37.5-mm)	No. 40 (425-µm)
1-in. (25.0-mm)	No. 60 (250-µm)
¾-in. (19.0-mm)	No. 140 (106-µm)
⅜-in. (9.5-mm)	No. 200 (75-µm)
No. 4 (4.75-mm)	

NOTE 6—A set of sieves giving uniform spacing of points for the graph, as required in Section 17, may be used if desired. This set consists of the following sieves:

3-in. (75-mm)	No. 16 (1.18-mm)
1½-in. (37.5-mm)	No. 30 (600-µm)
¾-in. (19.0-mm)	No. 50 (300-µm)
⅜-in. (9.5-mm)	No. 100 (150-µm)
No. 4 (4.75-mm)	No. 200 (75-µm)
No. 8 (2.36-mm)	

3.7 *Water Bath or Constant-Temperature Room*—A water bath or constant-temperature room for maintaining the soil suspension at a constant temperature during the hydrometer analysis. A satisfactory water tank is an insulated tank that maintains the temperature of the suspension at a convenient constant temperature at or near 68°F (20°C). Such a device is illustrated in Fig. 4. In cases where the work is performed in a room at an automatically controlled constant temperature, the water bath is not necessary.

3.8 *Beaker*—A beaker of 250-mL capacity.

3.9 *Timing Device*—A watch or clock with a second hand.

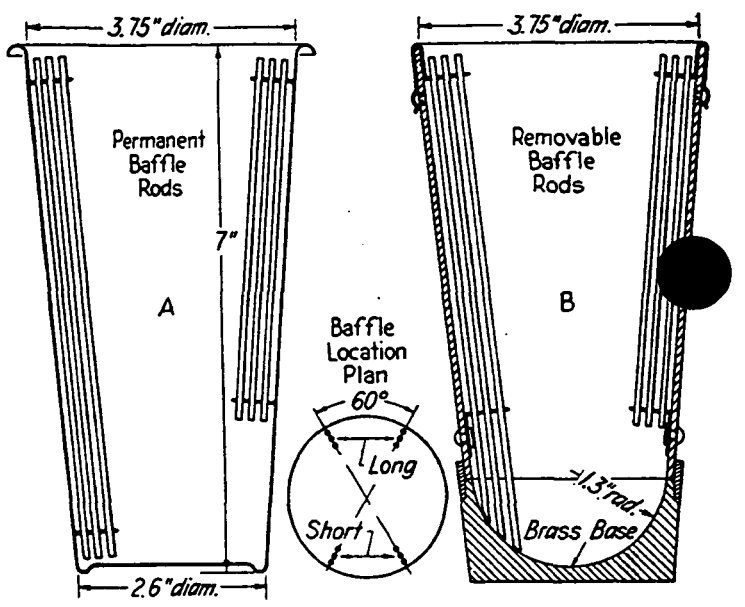

Metric Equivalents			
in.	1.3	2.6	3.75
mm	33	66	95.2

FIG. 2 Dispersion Cups of Apparatus

4. Dispersing Agent

4.1 A solution of sodium hexametaphosphate (sometimes called sodium metaphosphate) shall be used in distilled or demineralized water, at the rate of 40 g of sodium hexametaphosphate/litre of solution (Note 7).

NOTE 7—Solutions of this salt, if acidic, slowly revert or hydrolyze back to the orthophosphate form with a resultant decrease in dispersive action. Solutions should be prepared frequently (at least once a month) or adjusted to pH of 8 or 9 by means of sodium carbonate. Bottles containing solutions should have the date of preparation marked on them.

4.2 All water used shall be either distilled or demineralized water. The water for a hydrometer test shall be brought to the temperature that is expected to prevail during the hydrometer test. For example, if the sedimentation cylinder is to be placed in the water bath, the distilled or demineralized water to be used shall be brought to the temperature of the controlled water bath; or, if the sedimentation cylinder is used in a room with controlled temperature, the water for the test shall be at the temperature of the room. The basic temperature for the hydrometer test is 68°F (20°C). Small variations of temperature do not introduce differences that are of practical significance and do not prevent the use of corrections derived as prescribed.

153

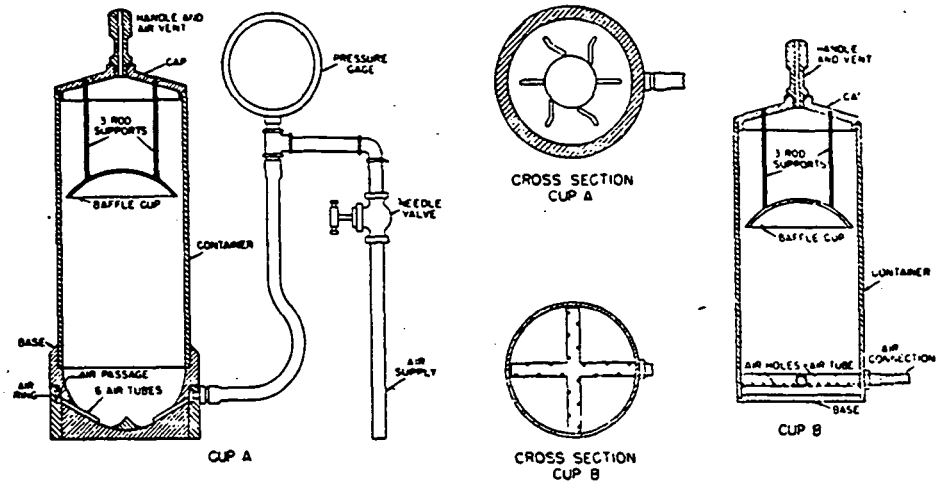

FIG. 3 Air-Jet Dispersion Cups of Apparatus B

5. Test Sample

5.1 Prepare the test sample for mechanical analysis as outlined in Practice D 421. During the preparation procedure the sample is divided into two portions. One portion contains only particles retained on the No. 10 (2.00-mm) sieve while the other portion contains only particles passing the No. 10 sieve. The mass of air-dried soil selected for purpose of tests, as prescribed in Practice D 421, shall be sufficient to yield quantities for mechanical analysis as follows:

5.1.1 The size of the portion retained on the No. 10 sieve shall depend on the maximum size of particle, according to the following schedule:

Nominal Diameter of Largest Particles, in. (mm)	Approximate Minimum Mass of Portion, g
⅜ (9.5)	500
¾ (19.0)	1000
1 (25.4)	2000
1½ (38.1)	3000
2 (50.8)	4000
3 (76.2)	5000

5.1.2 The size of the portion passing the No. 10 sieve shall be approximately 115 g for sandy soils and approximately 65 g for silt and clay soils.

5.2 Provision is made in Section 5 of Practice D 421 for weighing of the air-dry soil selected for purpose of tests, the separation of the soil on the No. 10 sieve by dry-sieving and washing, and the weighing of the washed and dried fraction retained on the No. 10 sieve. From these two masses the percentages retained and passing the No. 10 sieve can be calculated in accordance with 12.1.

NOTE 8—A check on the mass values and the thoroughness of pulverization of the clods may be secured by weighing the portion passing the No. 10 sieve and adding this value to the mass of the washed and oven-dried portion retained on the No. 10 sieve.

SIEVE ANALYSIS OF PORTION RETAINED ON NO. 10 (2.00-mm) SIEVE

6. Procedure

6.1 Separate the portion retained on the No. 10 (2.00-mm) sieve into a series of fractions using the 3-in. (75-mm), 2-in. (50-mm), 1½-in. (37.5-mm), 1-in. (25.0-mm), ¾-in. (19.0-mm), ⅜-in. (9.5-mm), No. 4 (4.75-mm), and No. 10 sieves, or as many as may be needed depending on the sample, or upon the specifications for the material under test.

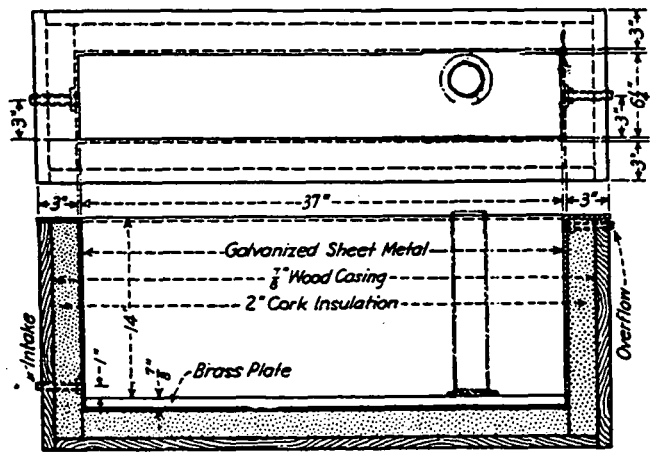

Metric Equivalents

in.	⅞	1	3	6¼	14	37
mm	22.2	25.4	76.2	158.2	356	940

FIG. 4 Insulated Water Bath

6.2 Conduct the sieving operation by means of a lateral and vertical motion of the sieve, accompanied by a jarring action in order to keep the sample moving continuously over the surface of the sieve. In no case turn or manipulate fragments in the sample through the sieve by hand. Continue sieving until not more than 1 mass % of the residue on a sieve passes that sieve during 1 min of sieving. When mechanical sieving is used, test the thoroughness of sieving by using the hand method of sieving as described above.

6.3 Determine the mass of each fraction on a balance conforming to the requirements of 3.1. At the end of weighing, the sum of the masses retained on all the sieves used should equal closely the original mass of the quantity sieved.

HYDROMETER AND SIEVE ANALYSIS OF PORTION PASSING THE NO. 10 (2.00-mm) SIEVE

7. Determination of Composite Correction for Hydrometer Reading

7.1 Equations for percentages of soil remaining in suspension, as given in 14.3, are based on the use of distilled or demineralized water. A dispersing agent is used in the water, however, and the specific gravity of the resulting liquid is appreciably greater than that of distilled or demineralized water.

7.1.1 Both soil hydrometers are calibrated at 68°F (20°C), and variations in temperature from this standard temperature produce inaccuracies in the actual hydrometer readings. The amount of the inaccuracy increases as the variation from the standard temperature increases.

7.1.2 Hydrometers are graduated by the manufacturer to be read at the bottom of the meniscus formed by the liquid on the stem. Since it is not possible to secure readings of soil suspensions at the bottom of the meniscus, readings must be taken at the top and a correction applied.

7.1.3 The net amount of the corrections for the three items enumerated is designated as the composite correction, and may be determined experimentally.

7.2 For convenience, a graph or table of composite corrections for a series of 1° temperature differences for the range of expected test temperatures may be prepared and used as needed. Measurement of the composite corrections may be made at two temperatures spanning the range of expected test temperatures, and corrections for the intermediate temperatures calculated assuming a straight-line relationship between the two observed values.

7.3 Prepare 1000 mL of liquid composed of distilled or demineralized water and dispersing agent in the same proportion as will prevail in the sedimentation (hydrometer) test. Place the liquid in a sedimentation cyclinder and the cylinder in the constant-temperature water bath, set for one of the two temperatures to be used. When the temperature of the liquid becomes constant, insert the hydrometer, and, after a short interval to permit the hydrometer to come to the temperature of the liquid, read the hydrometer at the top of the meniscus formed on the stem. For hydrometer 151H the composite correction is the difference between this reading and one; for hydrometer 152H it is the difference between the reading and zero. Bring the liquid and the hydrometer to the other temperature to be used, and secure the composite correction as before.

8. Hygroscopic Moisture

8.1 When the sample is weighed for the hydrometer test, weigh out an auxiliary portion of from 10 to 15 g in a small metal or glass container, dry the sample to a constant mass in an oven at 230 ± 9°F (110 ± 5°C), and weigh again. Record the masses.

9. Dispersion of Soil Sample

9.1 When the soil is mostly of the clay and silt sizes, weigh out a sample of air-dry soil of approximately 50 g. When the soil is mostly sand the sample should be approximately 100 g.

9.2 Place the sample in the 250-mL beaker and cover with 125 mL of sodium hexametaphosphate solution (40 g/L). Stir until the soil is thoroughly wetted. Allow to soak for at least 16 h.

9.3 At the end of the soaking period, disperse the sample further, using either stirring apparatus A or B. If stirring apparatus A is used, transfer the soil - water slurry from the beaker into the special dispersion cup shown in Fig. 2, washing any residue from the beaker into the cup with distilled or demineralized water (Note 9). Add distilled or demineralized water, if necessary, so that the cup is more than half full. Stir for a period of 1 min.

NOTE 9—A large size syringe is a convenient device for handling the water in the washing operation. Other devices include the wash-water bottle and a hose with nozzle connected to a pressurized distilled water tank.

9.4 If stirring apparatus B (Fig. 3) is used, remove the cover cap and connect the cup to a compressed air supply by means of a rubber hose. A air gage must be on the line between the cup and the control valve. Open the control valve so that the gage indicates 1 psi (7 kPa) pressure (Note 10). Transfer the soil - water slurry from the beaker to the air-jet dispersion cup by washing with distilled or demineralized water. Add distilled or demineralized water, if necessary, so that the total volume in the cup is 250 mL, but no more.

NOTE 10—The initial air pressure of 1 psi is required to prevent the soil - water mixture from entering the air-jet chamber when the mixture is transferred to the dispersion cup.

9.5 Place the cover cap on the cup and open the air control valve until the gage pressure is 20 psi (140 kPa). Disperse the soil according to the following schedule:

Plasticity Index	Dispersion Period, min
Under 5	5
6 to 20	10
Over 20	15

Soils containing large percentages of mica need be dispersed for only 1 min. After the dispersion period, reduce the gage pressure to 1 psi preparatory to transfer of soil - water slurry to the sedimentation cylinder.

10. Hydrometer Test

10.1 Immediately after dispersion, transfer the soil - water slurry to the glass sedimentation cylinder, and add distilled or demineralized water until the total volume is 1000 mL.

10.2 Using the palm of the hand over the open end of the cylinder (or a rubber stopper in the open end), turn the cylinder upside down and back for a period of 1 min to complete the agitation of the slurry (Note 11). At the end of 1 min set the cylinder in a convenient location and take hydrometer readings at the following intervals of time (measured from the beginning of sedimentation), or as many as may be needed, depending on the sample or the specification for the material under test: 2, 5, 15, 30, 60, 250, and 1440 min. If the controlled water bath is used, the sedimentation cylinder should be placed in the bath between the 2- and 5-min readings.

NOTE 11—The number of turns during this minute should be approximately 60, counting the turn upside down and back as two turns.

155

Any soil remaining in the bottom of the cylinder during the first few turns should be loosened by vigorous shaking of the cylinder while it is in the inverted position.

10.3 When it is desired to take a hydrometer reading, carefully insert the hydrometer about 20 to 25 s before the reading is due to approximately the depth it will have when the reading is taken. As soon as the reading is taken, carefully remove the hydrometer and place it with a spinning motion in a graduate of clean distilled or demineralized water.

NOTE 12—It is important to remove the hydrometer immediately after each reading. Readings shall be taken at the top of the meniscus formed by the suspension around the stem, since it is not possible to secure readings at the bottom of the meniscus.

10.4 After each reading, take the temperature of the suspension by inserting the thermometer into the suspension.

11. Sieve Analysis

11.1 After taking the final hydrometer reading, transfer the suspension to a No. 200 (75-μm) sieve and wash with tap water until the wash water is clear. Transfer the material on the No. 200 sieve to a suitable container, dry in an oven at 230 ± 9°F (110 ± 5°C) and make a sieve analysis of the portion retained, using as many sieves as desired, or required for the material, or upon the specification of the material under test.

CALCULATIONS AND REPORT

12. Sieve Analysis Values for the Portion Coarser than the No. 10 (2.00-mm) Sieve

12.1 Calculate the percentage passing the No. 10 sieve by dividing the mass passing the No. 10 sieve by the mass of soil originally split on the No. 10 sieve, and multiplying the result by 100. To obtain the mass passing the No. 10 sieve, subtract the mass retained on the No. 10 sieve from the original mass.

12.2 To secure the total mass of soil passing the No. 4 (4.75-mm) sieve, add to the mass of the material passing the No. 10 sieve the mass of the fraction passing the No. 4 sieve and retained on the No. 10 sieve. To secure the total mass of soil passing the ⅜-in. (9.5-mm) sieve, add to the total mass of soil passing the No. 4 sieve, the mass of the fraction passing the ⅜-in. sieve and retained on the No. 4 sieve. For the remaining sieves, continue the calculations in the same manner.

12.3 To determine the total percentage passing for each sieve, divide the total mass passing (see 12.2) by the total mass of sample and multiply the result by 100.

13. Hygroscopic Moisture Correction Factor

13.1 The hydroscopic moisture correction factor is the ratio between the mass of the oven-dried sample and the air-dry mass before drying. It is a number less than one, except when there is no hygroscopic moisture.

14. Percentages of Soil in Suspension

14.1 Calculate the oven-dry mass of soil used in the hydrometer analysis by multiplying the air-dry mass by the hygroscopic moisture correction factor.

14.2 Calculate the mass of a total sample represented by the mass of soil used in the hydrometer test, by dividing the oven-dry mass used by the percentage passing the No. 10 (2.00-mm) sieve, and multiplying the result by 100. This value is the weight W in the equation for percentage remaining in suspension.

TABLE 1 Values of Correction Factor, a, for Different Specific Gravities of Soil Particles[A]

Specific Gravity	Correction Factor[A]
2.95	0.94
2.90	0.95
2.85	0.96
2.80	0.97
2.75	0.98
2.70	0.99
2.65	1.00
2.60	1.01
2.55	1.02
2.50	1.03
2.45	1.05

[A] For use in equation for percentage of soil remaining in suspension when using Hydrometer 152H.

14.3 The percentage of soil remaining in suspension at the level at which the hydrometer is measuring the density of the suspension may be calculated as follows (Note 13): For hydrometer 151H:

$$P = [(100\,000/W) \times G/(G - G_1)](R - G_1)$$

NOTE 13—The bracketed portion of the equation for hydrometer 151H is constant for a series of readings and may be calculated first and then multiplied by the portion in the parentheses.

For hydrometer 152H:

$$P = (Ra/W) \times 100$$

where:

a = correction faction to be applied to the reading of hydrometer 152H. (Values shown on the scale are computed using a specific gravity of 2.65. Correction factors are given in Table 1),

P = percentage of soil remaining in suspension at the level at which the hydrometer measures the density of the suspension,

R = hydrometer reading with composite correction applied (Section 7),

W = oven-dry mass of soil in a total test sample represented by mass of soil dispersed (see 14.2), g,

G = specific gravity of the soil particles, and

G_1 = specific gravity of the liquid in which soil particles are suspended. Use numerical value of one in both instances in the equation. In the first instance any possible variation produces no significant effect, and in the second instance, the composite correction for R is based on a value of one for G_1.

15. Diameter of Soil Particles

15.1 The diameter of a particle corresponding to the percentage indicated by a given hydrometer reading shall be calculated according to Stokes' law (Note 14), on the basis that a particle of this diameter was at the surface of the suspension at the beginning of sedimentation and had settled to the level at which the hydrometer is measuring the density of the suspension. According to Stokes' law:

$$D = \sqrt{[30n/980(G - G_1)] \times L/T}$$

where:

D = diameter of particle, mm,

n = coefficient of viscosity of the suspending medium (in this case water) in poises (varies with changes in temperature of the suspending medium),

L = distance from the surface of the suspension to the level at which the density of the suspension is being measured, cm. (For a given hydrometer and sedimentation cylinder, values vary according to the hydrometer readings. This distance is known as effective depth (Table 2)),

T = interval of time from beginning of sedimentation to the taking of the reading, min,

G = specific gravity of soil particles, and

G_l = specific gravity (relative density) of suspending medium (value may be used as 1.000 for all practical purposes).

NOTE 14—Since Stokes' law considers the terminal velocity of a single sphere falling in an infinity of liquid, the sizes calculated represent the diameter of spheres that would fall at the same rate as the soil particles.

15.2 For convenience in calculations the above equation may be written as follows:

$$D = K\sqrt{L/T}$$

where:

K = constant depending on the temperature of the suspension and the specific gravity of the soil particles. Values of K for a range of temperatures and specific gravities are given in Table 3. The value of K does not change for a series of readings constituting a test, while values of L and T do vary.

15.3 Values of D may be computed with sufficient accuracy, using an ordinary 10-in. slide rule.

NOTE 15—The value of L is divided by T using the A- and B-scales, the square root being indicated on the D-scale. Without ascertaining the value of the square root it may be multiplied by K, using either the C- or CI-scale.

16. Sieve Analysis Values for Portion Finer than No. 10 (2.00-mm) Sieve

16.1 Calculation of percentages passing the various sieves used in sieving the portion of the sample from the hydrometer test involves several steps. The first step is to calculate the mass of the fraction that would have been retained on the No. 10 sieve had it not been removed. This mass is equal to the total percentage retained on the No. 10 sieve (100 minus total percentage passing) times the mass of the total sample represented by the mass of soil used (as calculated in 14.2), and the result divided by 100.

16.2 Calculate next the total mass passing the No. 200 sieve. Add together the fractional masses retained on all the sieves, including the No. 10 sieve, and subtract this sum from the mass of the total sample (as calculated in 14.2).

16.3 Calculate next the total masses passing each of the other sieves, in a manner similar to that given in 12.2.

16.4 Calculate last the total percentages passing by dividing the total mass passing (as calculated in 16.3) by the total mass of sample (as calculated in 14.2), and multiply the result by 100.

17. Graph

17.1 When the hydrometer analysis is performed, a graph of the test results shall be made, plotting the diameters of particles on a logarithmic scale as the abscissa and the percentages smaller than the corresponding diameters to an

TABLE 2 Values of Effective Depth Based on Hydrometer and Sedimentation Cylinder of Specified Sizes[A]

Hydrometer 151H		Hydrometer 152H			
Actual Hydrometer Reading	Effective Depth, L, cm	Actual Hydrometer Reading	Effective Depth, L, cm	Actual Hydrometer Reading	Effective Depth, L, cm
1.000	16.3	0	16.3	31	11.2
1.001	16.0	1	16.1	32	11.1
1.002	15.8	2	16.0	33	10.9
1.003	15.5	3	15.8	34	10.7
1.004	15.2	4	15.6	35	10.6
1.005	15.0	5	15.5		
1.006	14.7	6	15.3	36	10.4
1.007	14.4	7	15.2	37	10.2
1.008	14.2	8	15.0	38	10.1
1.009	13.9	9	14.8	39	9.9
1.010	13.7	10	14.7	40	9.7
1.011	13.4	11	14.5	41	9.6
1.012	13.1	12	14.3	42	9.4
1.013	12.9	13	14.2	43	9.2
1.014	12.6	14	14.0	44	9.1
1.015	12.3	15	13.8	45	8.9
1.016	12.1	16	13.7	46	8.8
1.017	11.8	17	13.5	47	8.6
1.018	11.5	18	13.3	48	8.4
1.019	11.3	19	13.2	49	8.3
1.020	11.0	20	13.0	50	8.1
1.021	10.7	21	12.9	51	7.9
1.022	10.5	22	12.7	52	7.8
1.023	10.2	23	12.5	53	7.6
1.024	10.0	24	12.4	54	7.4
1.025	9.7	25	12.2	55	7.3
1.026	9.4	26	12.0	56	7.1
1.027	9.2	27	11.9	57	7.0
1.028	8.9	28	11.7	58	6.8
1.029	8.6	29	11.5	59	6.6
1.030	8.4	30	11.4	60	6.5
1.031	8.1				
1.032	7.8				
1.033	7.6				
1.034	7.3				
1.035	7.0				
1.036	6.8				
1.037	6.5				
1.038	6.2				

[A] Values of effective depth are calculated from the equation:

$$L = L_1 + \tfrac{1}{2}[L_2 - (V_B/A)]$$

where:

L = effective depth, cm,

L_1 = distance along the stem of the hydrometer from the top of the bulb to the mark for a hydrometer reading, cm,

L_2 = overall length of the hydrometer bulb, cm,

V_B = volume of hydrometer bulb, cm^3, and

A = cross-sectional area of sedimentation cylinder, cm^2

Values used in calculating the values in Table 2 are as follows:

For both hydrometers, 151H and 152H:

L_2 = 14.0 cm

V_B = 67.0 cm^3

A = 27.8 cm^2

For hydrometer 151H:

L_1 = 10.5 cm for a reading of 1.000

= 2.3 cm for a reading of 1.031

For hydrometer 152H:

L_1 = 10.5 cm for a reading of 0 g/litre

= 2.3 cm for a reading of 50 g/litre

157

TABLE 3 Values of K for Use in Equation for Computing Diameter of Particle in Hydrometer Analysis

Temperature, °C	Specific Gravity of Soil Particles								
	2.45	2.50	2.55	2.60	2.65	2.70	2.75	2.80	2.85
16	0.01510	0.01505	0.01481	0.01457	0.01435	0.01414	0.01394	0.01374	0.01356
17	0.01511	0.01486	0.01462	0.01439	0.01417	0.01396	0.01376	0.01356	0.01338
18	0.01492	0.01467	0.01443	0.01421	0.01399	0.01378	0.01359	0.01339	0.01321
19	0.01474	0.01449	0.01425	0.01403	0.01382	0.01361	0.01342	0.1323	0.01305
20	0.01456	0.01431	0.01408	0.01386	0.01365	0.01344	0.01325	0.01307	0.01289
21	0.01438	0.01414	0.01391	0.01369	0.01348	0.01328	0.01309	0.01291	0.01273
22	0.01421	0.01397	0.01374	0.01353	0.01332	0.01312	0.01294	0.01276	0.01258
23	0.01404	0.01381	0.01358	0.01337	0.01317	0.01297	0.01279	0.01261	0.01243
24	0.01388	0.01365	0.01342	0.01321	0.01301	0.01282	0.01264	0.01246	0.01229
25	0.01372	0.01349	0.01327	0.01306	0.01286	0.01267	0.01249	0.01232	0.01215
26	0.01357	0.01334	0.01312	0.01291	0.01272	0.01253	0.01235	0.01218	0.01201
27	0.01342	0.01319	0.01297	0.01277	0.01258	0.01239	0.01221	0.01204	0.01188
28	0.01327	0.01304	0.01283	0.01264	0.01244	0.01255	0.01208	0.01191	0.01175
29	0.01312	0.01290	0.01269	0.01249	0.01230	0.01212	0.01195	0.01178	0.01162
30	0.01298	0.01276	0.01256	0.01236	0.01217	0.01199	0.01182	0.01165	0.01149

arithmetic scale as the ordinate. When the hydrometer analysis is not made on a portion of the soil, the preparation of the graph is optional, since values may be secured directly from tabulated data.

18. Report

18.1 The report shall include the following:

18.1.1 Maximum size of particles,

18.1.2 Percentage passing (or retained on) each sieve, which may be tabulated or presented by plotting on a graph (Note 16),

18.1.3 Description of sand and gravel particles:

18.1.3.1 Shape—rounded or angular,

18.1.3.2 Hardness—hard and durable, soft, or weathered and friable,

18.1.4 Specific gravity, if unusually high or low,

18.1.5 Any difficulty in dispersing the fraction passing the No. 10 (2.00-mm) sieve, indicating any change in type and amount of dispersing agent, and

18.1.6 The dispersion device used and the length of the dispersion period.

NOTE 16—This tabulation of graph represents the gradation of the sample tested. If particles larger than those contained in the sample were removed before testing, the report shall so state giving the amount and maximum size.

18.2 For materials tested for compliance with definite specifications, the fractions called for in such specifications shall be reported. The fractions smaller than the No. 10 sieve shall be read from the graph.

18.3 For materials for which compliance with definite specifications is not indicated and when the soil is composed almost entirely of particles passing the No. 4 (4.75-mm) sieve, the results read from the graph may be reported as follows:

(1) Gravel, passing 3-in. and retained on No. 4 sieve ..... %
(2) Sand, passing No. 4 sieve and retained on No. 200 sieve ..... %
  (a) Coarse sand, passing No. 4 sieve and retained on No. 10 sieve ..... %
  (b) Medium sand, passing No. 10 sieve and retained on No. 40 sieve ..... %
  (c) Fine sand, passing No. 40 sieve and retained on No. 200 sieve ..... %
(3) Silt size, 0.074 to 0.005 mm ..... %
(4) Clay size, smaller than 0.005 mm ..... %
  Colloids, smaller than 0.001 mm ..... %

18.4 For materials for which compliance with definite specifications is not indicated and when the soil contains material retained on the No. 4 sieve sufficient to require a sieve analysis on that portion, the results may be reported as follows (Note 17):

SIEVE ANALYSIS

Sieve Size	Percentage Passing
3-in.	.....
2-in.	.....
1½-in.	.....
1-in.	.....
¾-in.	.....
⅜-in.	.....
No. 4 (4.75-mm)	.....
No. 10 (2.00-mm)	.....
No. 40 (425-μm)	.....
No. 200 (75-μm)	.....
HYDROMETER ANALYSIS	
0.074 mm	.....
0.005 mm	.....
0.001 mm	.....

NOTE 17—No. 8 (2.36-mm) and No. 50 (300-μm) sieves may be substituted for No. 10 and No. 40 sieves.

19. Keywords

19.1 grain-size; hydrometer analysis; hygroscopic moisture; particle-size; sieve analysis

The American Society for Testing and Materials takes no position respecting the validity of any patent rights asserted in connection with any item mentioned in this standard. Users of this standard are expressly advised that determination of the validity of any such patent rights, and the risk of infringement of such rights, are entirely their own responsibility.

This standard is subject to revision at any time by the responsible technical committee and must be reviewed every five years and if not revised, either reapproved or withdrawn. Your comments are invited either for revision of this standard or for additional standards and should be addressed to ASTM Headquarters. Your comments will receive careful consideration at a meeting of the responsible technical committee, which you may attend. If you feel that your comments have not received a fair hearing you should make your views known to the ASTM Committee on Standards, 1916 Race St., Philadelphia, PA 19103.

Designation: D 698 – 91

Test Method for Laboratory Compaction Characteristics of Soil Using Standard Effort (12,400 ft-lbf/ft^3 (600 kN-m/m^3))[1]

This standard is issued under the fixed designation D 698; the number immediately following the designation indicates the year of original adoption or, in the case of revision, the year of last revision. A number in parentheses indicates the year of last reapproval. A superscript epsilon (ε) indicates an editorial change since the last revision or reapproval.

1. Scope

1.1 This test method covers laboratory compaction procedures used to determine the relationship between water content and dry unit weight of soils (compaction curve) compacted in a 4 or 6-in. (101.6 or 152.4-mm) diameter mold with a 5.5-lbf (24.4-N) rammer dropped from a height of 12 in. (305 mm) producing a compactive effort of 12,400 ft-lbf/ft^3 (600 kN-m/m^3).

NOTE 1—The equipment and procedures are similar as those proposed by R. R. Proctor (*Engineering News Record*—September 7, 1933) with this one major exception: his rammer blows were applied as "12 inch firm strokes" instead of free fall, producing variable compactive effort depending on the operator, but probably in the range 15,000 to 25,000 ft-lbf/ft^3 (700 to 1,200 kN-m/m^3). The standard effort test (see 3.2.2) is sometimes referred to as the Proctor Test.

NOTE 2—Soils and soil-aggregate mixtures should be regarded as natural occurring fine- or coarse-grained soils or composites or mixtures of natural soils, or mixtures of natural and processed soils or aggregates such as silt, gravel, or crushed rock.

1.2 This test method applies only to soils that have 30 % or less by weight of particles retained on the ¾-inch (19.0-mm) sieve.

NOTE 3—For relationships between unit weights and water contents of soils with 30 % or less by weight of material retained on the ¾-in. (19.0-mm) sieve to unit weights and water contents of the fraction passing ¾-in. (19.0-mm) sieve, see Practice D 4718.

1.3 Three alternative procedures are provided. The procedure used shall be as indicated in the specification for the material being tested. If no procedure is specified, the choice should be based on the material gradation.

1.3.1 *Procedure A:*

1.3.1.1 *Mold*—4-in. (101.6-mm) diameter.

1.3.1.2 *Material*—Passing No. 4 (4.75-mm) sieve.

1.3.1.3 *Layers*—Three.

1.3.1.4 *Blows per layer*—25.

1.3.1.5 *Use*—May be used if 20 % or less by weight of the material is retained on the No. 4 (4.75-mm) sieve.

1.3.1.6 *Other Use*—If this procedure is not specified, materials that meet these gradation requirements may be tested using Procedures B or C.

1.3.2 *Procedure B:*

1.3.2.1 *Mold*—4-in. (101.6-mm) diameter.

1.3.2.2 *Material*—Passing ⅜-in. (9.5-mm) sieve.

1.3.2.3 *Layers*—Three.

1.3.2.4 *Blows per layer*—25.

1.3.2.5 *Use*—Shall be used if more than 20 % by weight of the material is retained on the No. 4 (4.75-mm) sieve and 20 % or less by weight of the material is retained on the ⅜-in. (9.5-mm) sieve.

1.3.2.6 *Other Use*—If this procedure is not specified, materials that meet these gradation requirements may be tested using Procedure C.

1.3.3 *Procedure C:*

1.3.3.1 *Mold*—6-in. (152.4-mm) diameter.

1.3.3.2 *Material*—Passing ¾-inch (19.0-mm) sieve.

1.3.3.3 *Layers*—Three.

1.3.3.4 *Blows per layer*—56.

1.3.3.5 *Use*—Shall be used if more than 20 % by weight of the material is retained on the ⅜-in. (9.5-mm) sieve and less than 30 % by weight of the material is retained on the ¾-in. (19.0-mm) sieve.

1.3.4 The 6-in. (152.4-mm) diameter mold shall not be used with Procedure A or B.

NOTE 4—Results have been found to vary slightly when a material is tested at the same compactive effort in different size molds.

1.4 If the test specimen contains more than 5 % by weight oversize fraction (coarse fraction) and the material will not be included in the test, corrections must be made to the unit weight and water content of the specimen or to the appropriate field in place density test specimen using Practice D 4718.

1.5 This test method will generally produce a well defined maximum dry unit weight for non-free draining soils. If this test method is used for free draining soils the maximum unit weight may not be well defined, and can be less than obtained using Test Methods D 4253.

1.6 The values in inch-pound units are to be regarded as the standard. The values stated in SI units are provided for information only.

1.6.1 In the engineering profession it is customary practice to use, interchangeably, units representing both mass and force, unless dynamic calculations ($F = Ma$) are involved. This implicitly combines two separate systems of units, that is, the absolute system and the gravimetric system. It is scientifically undesirable to combine the use of two separate systems within a single standard. This test method has been written using inch-pound units (gravimetric system) where the pound (lbf) represents a unit of force. The use of mass (lbm) is for convenience of units and is not intended to convey the use is scientifically correct. Conversions are given in the SI system in accordance with Practice E 380. The use of balances or scales recording pounds of mass (lbm), or the recording of density in lbm/ft^3 should not be regarded as nonconformance with this standard.

[1] This test method is under the jurisdiction of ASTM Committee D-18 on Soil and Rock and is the direct responsibility of Subcommittee D18.03 on Texture, Plasticity and Density Characteristics of Soils.

Current edition approved Nov. 19, 1991. Published January 1992.

1.7 *This standard does not purport to address all of the safety problems, if any, associated with its use. It is the responsibility of the user of this standard to establish appropriate safety and health practices and determine the applicability of regulatory limitations prior to use.*

2. Referenced Documents

2.1 *ASTM Standards:*

C 127 Test Method for Specific Gravity and Absorption of Coarse Aggregate[2]

C 136 Method for Sieve Analysis of Fine and Coarse Aggregate[2]

D 422 Test Method for Particle Size Analysis of Soils[3]

D 653 Terminology Relating to Soil, Rock, and Contained Fluids[3]

D 854 Test Method for Specific Gravity of Soils[3]

D 1557 Test Methods for Moisture-Density Relations of Soils and Soil Aggregate Mixtures Using 10-lb (4.54-kg.) Rammer and 18-in. (457 mm) Drop[3]

D 2168 Test Methods for Calibration of Laboratory Mechanical-Rammer Soil Compactors[3]

D 2216 Test Method for Laboratory Determination of Water (Moisture) Content of Soil, Rock and Soil-Aggregate Mixtures[3]

D 2487 Test Method for Classification of Soils for Engineering Purposes[3]

D 2488 Practice for Description of Soils (Visual-Manual Procedure)[3]

D 4220 Practices for Preserving and Transporting Soil Samples[3]

D 4253 Test Methods for Maximum Index Density of Soils Using a Vibratory Table[3]

D 4718 Practice for Correction of Unit Weight and Water Content for Soils Containing Oversize Particles[3]

D 4753 Specification for Evaluating, Selecting and Specifying Balances and Scales For Use in Soil and Rock Testing[3]

E 1 Specification for ASTM Thermometers[4]

E 11 Specification for Wire-Cloth Sieves for Testing Purposes[5]

E 319 Practice for the Evaluation of Single-Pan Mechanical Balances[5]

E 380 Practice for Use of the International System of Units (SI) (the Modernized Metric System)[5]

3. Terminology

3.1 *Definitions*—See Terminology D 653 for general definitions.

3.2 *Description of Terms Specific to This Standard:*

3.2.1 *oversize fraction (coarse fraction)*, P_c in %—the portion of total sample not used in performing the compaction test; it may be the portion of total sample retained on the No. 4 (4.75-mm), 3/8-in. (9.5-mm), or 3/4-in. (19.0-mm) sieve.

3.2.2 *standard effort*—the term for the 12,400 ft-lbf/ft^3 (600 kN-m/m^3) compactive effort applied by the equipment and procedures of this test.

3.2.3 *standard maximum dry unit weight*, γ_{dmax} in lbf/ft^3 (kN/m^3)—the maximum value defined by the compaction curve for a compaction test using standard effort.

3.2.4 *standard optimum water content*, w_o in %—the water content at which a soil can be compacted to the maximum dry unit weight using standard compactive effort.

3.2.5 *test fraction (finer fraction)*, P_F in %—the portion of the total sample used in performing the compaction test; it is the fraction passing the No. 4 (4.75-mm) sieve in Procedure A, minus 3/8-in. (9.5-mm) sieve in Procedure B, or minus 3/4-in. (19.0-mm) sieve in Procedure C.

4. Summary of Test Method

4.1 A soil at a selected water content is placed in three layers into a mold of given dimensions, with each layer compacted by 25 or 56 blows of a 5.5-lbf (24.4-N) rammer dropped from a distance of 12-in. (305-mm), subjecting the soil to a total compactive effort of about 12,400 ft-lbf/ft^3 (600 kN-m/m^3). The resulting dry unit weight is determined. The procedure is repeated for a sufficient number of water contents to establish a relationship between the dry unit weight and the water content for the soil. This data, when plotted, represents a curvilinear relationship known as the compaction curve. The values of optimum water content and standard maximum dry unit weight are determined from the compaction curve.

5. Significance and Use

5.1 Soil placed as engineering fill (embankments, foundation pads, road bases) is compacted to a dense state to obtain satisfactory engineering properties such as, shear strength, compressibility, or permeability. Also, foundation soils are often compacted to improve their engineering properties. Laboratory compaction tests provide the basis for determining the percent compaction and water content needed to achieve the required engineering properties, and for controlling construction to assure that the required compaction and water contents are achieved.

5.2 During design of an engineered fill, shear, consolidation, permeability, or other tests require preparation of test specimens by compacting at some water content to some unit weight. It is common practice to first determine the optimum water content (w_o) and maximum dry unit weight (γ_{dmax}) by means of a compaction test. Test specimens are compacted at a selected water content (w), either wet or dry of optimum (w_o) or at optimum (w_o), and at a selected dry unit weight related to a percentage of maximum dry unit weight (γ_{dmax}). The selection of water content (w), either wet or dry of optimum (w_o) or at optimum (w_o) and the dry unit weight (γ_{dmax}) may be based on past experience, or a range of values may be investigated to determine the necessary percent of compaction.

6. Apparatus

6.1 *Mold Assembly*—The molds shall be cylindrical in shape, made of rigid metal and be within the capacity and dimensions indicated in 6.1.1 or 6.1.2 and Figs. 1 and 2. The walls of the mold may be solid, split, or tapered. The "split" type may consist of two half-round sections, or a section of

[2] *Annual Book of ASTM Standards*, Vol 04.02.
[3] *Annual Book of ASTM Standards*, Vol 04.08.
[4] *Annual Book of ASTM Standards*, Vol 14.03.
[5] *Annual Book of ASTM Standards*, Vol 14.02.

160

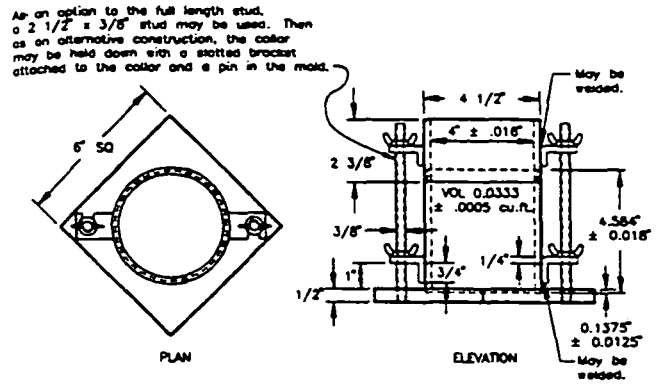

FIG. 1 4.0-in. Cylindrical Mold

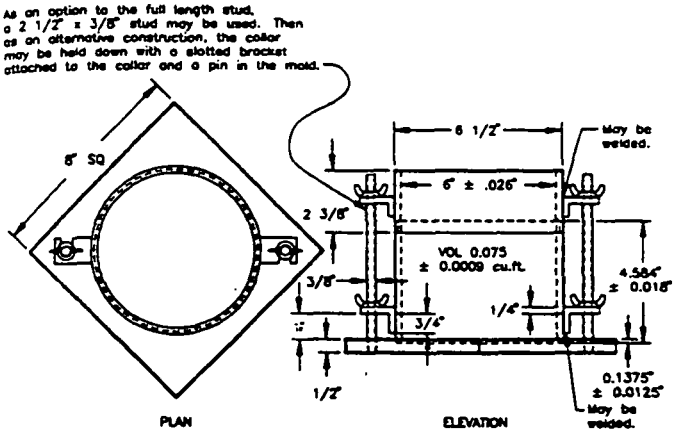

FIG. 2 6.0-in. Cylindrical Mold

pipe split along one element, which can be securely locked together to form a cylinder meeting the requirements of this section. The "tapered" type shall an internal diameter taper that is uniform and not more than 0.200 in./ft (16.7- mm/m) of mold height. Each mold shall have a base plate and an extension collar assembly, both made of rigid metal and constructed so they can be securely attached and easily detached from the mold. The extension collar assembly shall have a height extending above the top of the mold of at least 2.0 in. (50.8-mm) which may include an upper section that flares out to form a funnel provided there is at least a 0.75 in. (19.0-mm) straight cylindrical section beneath it. The extension collar shall align with the inside of the mold. The bottom of the base plate and bottom of the centrally recessed area that accepts the cylindrical mold shall be planar.

6.1.1 *Mold, 4 in.*—A mold having a 4.000 ± 0.016-in. (101.6 ± 0.4-mm) average inside diameter, a height of 4.584 ± 0.018-in. (116.4 ± 0.5-mm) and a volume of 0.0333 ± 0.0005 ft^3 (944 ± 14 cm^3). A mold assembly having the minimum required features is shown in Fig. 1.

6.1.2 *Mold, 6 in.*—A mold having a 6.000 ± 0.026-in. (152.4 ± 0.7-mm) average inside diameter, a height of 4.584 ± 0.018-in. (116.4 ± 0.5-mm), and a volume of 0.075 ± 0.0009 ft^3 (2124 ± 25 cm^3). A mold assembly having the minimum required features is shown in Fig. 2.

6.2 *Rammer*—A rammer, either manually operated as described further in 6.2.1 or mechanically operated as described in 6.2.2. The rammer shall fall freely through a distance of 12 ± 0.05-in. (304.8 ± 1.3-mm) from the surface of the specimen. The mass of the rammer shall be 5.5 ± 0.02-lbm (2.5 ± 0.01-kg), except that the mass of the mechanical rammers may be adjusted as described in Test Methods D 2168, see Note 5. The striking face of the rammer shall be planar and circular, except as noted in 6.2.2.3, with a diameter when new of 2.000 ± 0.005-in. (50.80 ± 0.13-mm). The rammer shall be replaced if the striking face becomes worn or bellied to the extent that the diameter exceeds 2.000 ± 0.01-in. (50.80 ± 0.25-mm).

NOTE 5—It is a common and acceptable practice in the inch-pound system to assume that the mass of the rammer is equal to its mass determined using either a kilogram or pound balance and 1 lbf is equal to 1 lbm or 0.4536 kg. or 1 N is equal to 0.2248 lbm or 0.1020 kg.

6.2.1 *Manual Rammer*—The rammer shall be equipped with a guide sleeve that has sufficient clearance that the free fall of the rammer shaft and head is not restricted. The guide sleeve shall have at least four vent holes at each end (eight holes total) located with centers ¾ ± 1/16-in. (19.0 ± 1.6-mm) from each end and spaced 90 degrees apart. The minimum diameter of the vent holes shall be ⅜-in. (9.5-mm). Additional holes or slots may be incorporated in the guide sleeve.

6.2.2 *Mechanical Rammer-Circular Face*—The rammer shall operate mechanically in such a manner as to provide uniform and complete coverage of the specimen surface. There shall be 0.10 ± 0.03-in. (2.5 ± 0.8-mm) clearance between the rammer and the inside surface of the mold at its smallest diameter. The mechanical rammer shall meet the calibration requirements of Test Methods D 2168. The mechanical rammer shall be equipped with a positive mechanical means to support the rammer when not in operation.

6.2.2.3 *Mechanical Rammer-Sector Face*—When used with the 6-in. (152.4-mm) mold, a sector face rammer may be used in place of the circular face rammer. The specimen contact face shall have the shape of a sector of a circle of radius equal to 2.90 ± 0.02-in. (73.7 ± 0.5-mm). The rammer shall operate in such a manner that the vertex of the sector is positioned at the center of the specimen.

6.3 *Sample Extruder (optional)*—A jack, frame or other device adapted for the purpose of extruding compacted specimens from the mold.

6.4 *Balance*—A class GP5 balance meeting the requirements of Specification D 4753 for a balance of 1-g readability.

6.5 *Drying Oven*—Thermostatically controlled, preferably of a forced-draft type and capable of maintaining a uniform temperature of 230 ± 9°F (110 ± 5°C) throughout the drying chamber.

6.6 *Straightedge*—A stiff metal straightedge of any convenient length but not less than 10-in. (254-mm). The total length of the straightedge shall be machined straight to a tolerance of ±0.005-in. (±0.1-mm). The scraping edge shall be beveled if it is thicker than ⅛-in. (3-mm).

6.7 *Sieves*—¾-in. (19.0-mm), ⅜-in. (9.5-mm), and No. 4 (4.75-mm), conforming to the requirements of Specification E 11.

6.8 *Mixing Tools*—Miscellaneous tools such as mixing pan, spoon, trowel, spatula, etc., or a suitable mechanical device for thoroughly mixing the sample of soil with increments of water.

7. Calibration

7.1 Perform calibrations before initial use, after repairs or other occurrences that might affect the test results, at intervals not exceeding 1,000 test specimens, or annually, whichever occurs first, for the following apparatus:

7.1.2 *Balance*—Evaluate in accordance with Specification D 4753.

7.1.3 *Molds*—Determine the volume as described in Annex 1.

7.1.4 *Manual Rammer*—Verify the free fall distance, rammer mass, and rammer face in accordance with Section 6.2. Verify the guide sleeve requirements in accordance with Section 6.2.1.

7.1.5 *Mechanical Rammer*—Calibrate and adjust the mechanical rammer in accordance with Test Methods D 2168. In addition, the clearance between the rammer and the inside surface of the mold shall be verified in accordance with 6.2.2.

8. Test Sample

8.1 The required sample mass for Procedures A and B is approximately 35-lbm (16-kg), and for Procedure C is approximately 65-lbm (29-kg) of dry soil. Therefore, the field sample should have a moist mass of at least 50-lbm (23-kg) and 100-lbm (45-kg), respectively.

8.2 Determine the percentage of material retained on the No. 4 (4.75-mm), ⅜-in. (9.5-mm), or ¾-in. (19.0-mm) sieve as appropriate for choosing Procedure A, B, or C. Make this determination by separating out a representative portion from the total sample and determining the percentages passing the sieves of interest by Test Methods D 422 or Method C 136. It is only necessary to calculate percentages for the sieve or sieves for which information is desired.

9. Preparation of Apparatus

9.1 Select the proper compaction mold in accordance with the procedure (A, B, or C) being used. Determine and record its mass to the nearest gram. Assemble the mold, base and extension collar. Check the alignment of the inner wall of the mold and mold extension collar. Adjust if necessary.

9.2 Check that the rammer assembly is in good working condition and that parts are not loose or worn. Make any necessary adjustments or repairs. If adjustments or repairs are made, the rammer must be recalibrated.

10. Procedure

10.1 *Soils:*

10.1.1 Do not reuse soil that has been previously laboratory compacted.

10.1.2 When using this test method for soils containing hydrated halloysite, or where past experience with a particular soil indicates that results will be altered by air drying, use the moist preparation method (see 10.2).

10.1.3 Prepare the soil specimens for testing in accordance with 10.2 (preferred) or with 10.3.

10.2 *Moist Preparation Method (preferred)*—Without previously drying the sample, pass it through a No. 4 (4.75-mm), ⅜-in. (9.5-mm), or ¾-in. (19.0-mm) sieve, depending on the procedure (A, B, or C) being used. Determine the water content of the processed soil.

10.2.1 Prepare at least four (preferably five) specimens having water contents such that they bracket the estimated optimum water content. A specimen having a water content close to optimum should be prepared first by trial addition of water and mixing (see Note 6). Select water contents for the rest of the specimens to provide at least two specimens wet and two specimens dry of optimum, and water contents varying by about 2 %. At least two water contents are necessary on the wet and dry side of optimum to accurately define the dry unit weight compaction curve (see 10.5). Some soils with very high optimum water content or a relatively flat compaction curve may require larger water content increments to obtain a well defined maximum dry unit weight. Water content increments should not exceed 4 %.

NOTE 6—With practice it is usually possible to visually judge a point near optimum water content. Typically, soil at optimum water content can be squeezed into a lump that sticks together when hand pressure is released, but will break cleanly into two sections when "bent". At water contents dry of optimum soils tend to crumble; wet of optimum soils tend to stick together in a sticky cohesive mass. Optimum water content is typically slightly less than the plastic limit.

10.2.2 Use approximately 5-lbm (2.3-kg) of the sieved soil for each specimen to be compacted using Procedure A or B, or 13-lbm (5.9-kg) using Procedure C. To obtain the specimen water contents selected in 10.2.1, add or remove the required amounts of water as follows: to add water, spray it into the soil during mixing; to remove water, allow the soil to dry in air at ambient temperature or in a drying apparatus such that the temperature of the sample does not exceed 140°F (60°C). Mix the soil frequently during drying to maintain an even water content distribution. Thoroughly mix each specimen to ensure even distribution of water throughout and then place in a separate covered container and allow to stand in accordance with Table 1 prior to compaction. For the purpose of selecting a standing time, the soil may be classified using Test Method D 2487, Practice D 2488 or data on other samples from the same material source. For referee testing, classification shall be by Test Method D 2487.

10.3 *Dry Preparation Method*—If the sample is too damp to be friable, reduce the water content by air drying until the material is friable. Drying may be in air or by the use of drying apparatus such that the temperature of the sample does not exceed 140°F (60°C). Thoroughly break up the aggregations in such a manner as to avoid breaking individual particles. Pass the material through the appropriate sieve: No. 4 (4.75-mm), ⅜-in. (9.5-mm), or ¾-in. (19.0-mm). When preparing the material by passing over the ¾-in. sieve for compaction in the 6-in. mold, break up aggregations sufficiently to at least pass the ⅜-in. sieve in order to facilitate the distribution of water throughout the soil in later mixing.

10.3.1 Prepare at least four (preferably five) specimens in accordance with 10.2.1.

10.3.2 Use approximately 5-lbm (2.3-kg) of the sieved soil for each specimen to be compacted using Procedure A or B,

TABLE 1 Required Standing Times of Moisturized Specimens

Classification	Minimum Standing Time, h
GW, GP, SW, SP	No Requirement
GM, SM	3
All other soils	16

162

TABLE 2 Metric Equivalents for Figs. 1 and 2

in.	mm
0.016	0.41
0.026	0.66
0.032	0.81
0.028	0.71
½	12.70
2½	63.50
2⅝	66.70
4	101.60
4½	114.30
4.584	116.43
4¾	120.60
6	152.40
6½	165.10
6⅝	168.30
6¾	171.40
8¼	209.60
ft³	**cm³**
1/30 (0.0333)	943
0.0005	14
1/13.333 (0.0750)	2,124
0.0011	31

or 13-lbm (5.9-kg) using Procedure C. Add the required amounts of water to bring the water contents of the specimens to the values selected in 10.3.1. Follow the specimen preparation procedure specified in 10.2.2 for drying the soil or adding water into the soil and curing each test specimen.

10.4 *Compaction*—After curing, if required, each specimen shall be compacted as follows:

10.4.1 Determine and record the mass of the mold or mold and base plate.

10.4.2 Assemble and secure the mold and collar to the base plate. The mold shall rest on a uniform rigid foundation, such as provided by a cylinder or cube of concrete with a mass of not less than 200-lbm (91-kg). Secure the base plate to the rigid foundation. The method of attachment to the rigid foundation shall allow easy removal of the assembled mold, collar and base plate after compaction is completed.

10.4.3 Compact the specimen in three layers. After compaction, each layer should be approximately equal in thickness. Prior to compaction, place the loose soil into the mold and spread into a layer of uniform thickness. Lightly tamp the soil prior to compaction until it is not in a fluffy or loose state, using either the manual compaction rammer or a 2-in. (5-mm) diameter cylinder. Following compaction of each of the first two layers, any soil adjacent to the mold walls that has not been compacted or extends above the compacted surface shall be trimmed. The trimmed soil may be included with the additional soil for the next layer. A knife or other suitable device may be used. The total amount of soil used shall be such that the third compacted layer slighly extends into the collar, but does not exceed ¼-in. (6-mm) above the top of the mold. If the third layer does extend above the top of the mold by more than ¼-in. (6-mm), the specimen shall be discarded. The specimen shall be discarded when the last blow on the rammer for the third layer results in the bottom of the rammer extending below the top of the compaction mold.

10.4.4 Compact each layer with 25 blows for the 4-in. (101.6-mm) mold or with 56 blows for the 6-in. (152.4-mm) mold.

NOTE 7—When compacting specimens wetter than optimum wa content, uneven compacted surfaces can occur and operator judgeme is required as to the average height of the specimen.

10.4.5 In operating the manual rammer, take care avoid lifting the guide sleeve during the rammer upstrok Hold the guide sleeve steady and within 5° of vertical. App the blows at a uniform rate of approximately 25 blows/m and in such a manner as to provide complete, unifor coverage of the specimen surface.

10.4.6 Following compaction of the last layer, remove t collar and base plate from the mold, except as noted 10.4.7. A knife may be used to trim the soil adjacent to t collar to loosen the soil from the collar before removal avoid disrupting the soil below the top of the mold.

10.4.7 Carefully trim the compacted specimen even wi the top of the mold by means of the straightedge scrap across the top of the mold to form a plane surface even wi the top of the mold. Initial trimming of the specimen abo the top of the mold with a knife may prevent the soil fro tearing below the top of the mold. Fill any holes in the t surface with unused or trimmed soil from the specime press in with the fingers, and again scrape the straighted across the top of the mold. Repeat the appropriate precedi operations on the bottom of the specimen when the mo volume was determined without the base plate. For very w or dry soils, soil or water may be lost if the base plate removed. For these situations, leave the base plate attache to the mold. When the base plate is left attached, the volum of the mold must be calibrated with the base plate attache to the mold rather than a plastic or glass plate as noted Annex 1, A1.4.

10.4.8 Determine and record the mass of the specime and mold to the nearest gram. When the base plate is le attached, determine and record the mass of the specime mold and base plate to the nearest gram.

10.4.9 Remove the material from the mold. Obtain specimen for water content by using either the who specimen (preferred method) or a representative portio When the entire specimen is used, break it up to facilita drying. Otherwise, obtain a portion by slicing the compacte specimen axially through the center and removing abo 500-g of material from the cut faces. Obtain the wat content in accordance with Test Method D 2216.

10.5 Following compaction of the last specimen, compa the wet unit weights to ensure that a desired pattern obtaining data on each side of the optimum water conte will be attained for the dry unit weight compaction curv Plotting the wet unit weight and water content of eac compacted specimen can be an aid in making the abo evaluation. If the desired pattern is not obtained, addition compacted specimens will be required. Generally, one wat content value wet of the water content defining the ma imum wet unit weight is sufficient to ensure data on the w side of optimum water content for the maximum dry un weight.

11. Calculation

11.1 Calculate the dry unit weight and water content each compacted specimen as explained in 11.3 and 11.4. Pl the values and draw the compaction curve as a smooth curv through the points (see example, Fig. 3). Plot dry unit weig

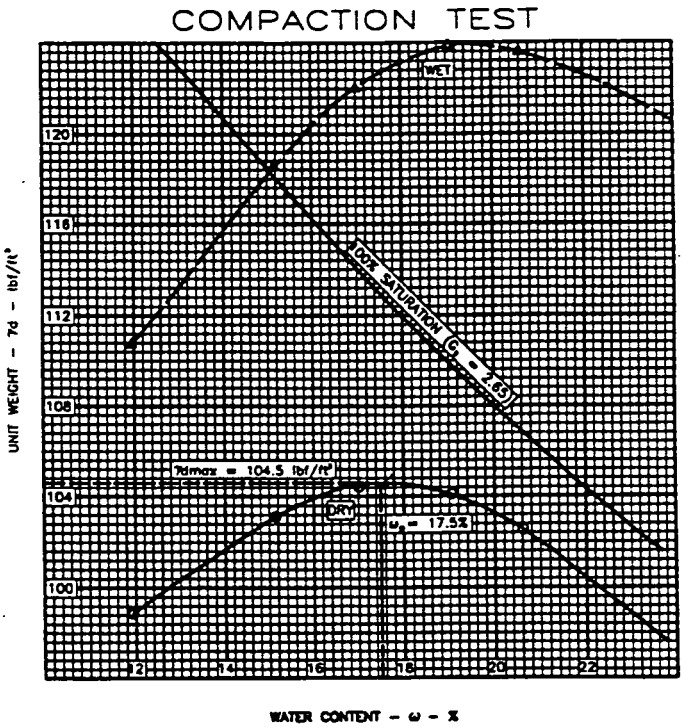

FIG. 3 Example Compaction Curve Plotting

to the nearest 0.1 lbf/ft³ (0.2 kN/m³) and water content to the nearest 0.1 %. From the compaction curve, determine the optimum water content and maximum dry unit weight. If more than 5 % by weight of oversize material was removed from the sample, calculate the corrected optimum water content and maximum dry unit weight of the total material using Practice D 4718. This correction may be made to the appropriate field in place density test specimen rather than to the laboratory test specimen.

11.2 Plot the 100 % saturation curve. Values of water content for the condition of 100 % saturation can be calculated as explained in 11.5 (see example, Fig. 3).

NOTE 8—The 100 % saturation curve is an aid in drawing the compaction curve. For soils containing more than approximately 10 % fines at water contents well above optimum, the two curves generally become roughly parallel with the wet side of the compaction curve between 92 % to 95 % saturation. Theoretically, the compaction curve cannot plot to the right of the 100 % saturation curve. If it does, there is an error in specific gravity, in measurements, in calculations, in test procedures, or in plotting.

NOTE 9—The 100 % saturation curve is sometimes referred to as the zero air voids curve or the complete saturation curve.

11.3 *Water Content, w*—Calculate in accordance with Test Method D 2216.

11.4 *Dry Unit Weights*—Calculate the moist density (Eq. 1), the dry density (Eq. 2), and then the dry unit weight (Eq. 3) as follows:

$$\rho_m = 1000(M_t - M_{md})/V \quad (1)$$

where:

ρ_m = moist density of compacted specimen, Mg/m³,
M_t = mass of moist specimen and mold, kg,
M_{md} = mass of compaction mold, kg, and
V = volume of compaction mold, m³ (see Annex 1)

$$\rho_d = \rho_m/(1 + w/100) \quad (2)$$

where:

ρ_d = dry density of compacted specimen, Mg/m³, and
w = water content, %.

$$\gamma_d = 62.43\ \rho_d \text{ in lbf/ft}^3 \quad (3)$$

or

$$\gamma_d = 9.807\ \rho_d \text{ in kN/m}^3$$

where:

γ_d = dry unit weight of compacted specimen.

11.5 To calculate points for plotting the 100 % saturation curve or zero air voids curve select values of dry unit weight, calculate corresponding values of water content corresponding to the condition of 100 % saturation as follows:

$$w_{sat} \frac{(\gamma_w)(G_s) - \gamma_d}{(\gamma_d)(G_s)} \times 100 \quad (4)$$

where:

w_{sat} = water content for complete saturation, %,
γ_w = unit weight of water, 62.43 lbf/ft³ (9.807 kn/m³),
γ_d = dry unit weight of soil, and
G_s = specific gravity of soil.

NOTE 10—Specific gravity may be estimated for the test specimen on the basis of test data from other samples of the same soil classification and source. Otherwise, a specific gravity test (Test Method C 127, Test Method D 854, or both) is necessary.

12. Report

12.1 The report shall contain the following information:

12.1.1 Procedure used (A, B, or C).

12.1.2 Preparation method used (moist or dry).

12.1.3 As received water content if determined.

12.1.4 Standard optimum water content, to the nearest 0.5 %.

12.1.5 Standard maximum dry unit weight, to the nearest 0.5 lbf/ft³.

12.1.6 Description of rammer (manual or mechanical).

12.1.7 Soil sieve data when applicable for determination of procedure (A, B, or C) used.

12.1.8 Description of material used in test, by Practice D 2488, or classification by Test Method D 2487.

12.1.9 Specific gravity and method of determination.

12.1.10 Origin of material used in test, for example, project, location, depth, and the like.

12.1.11 Compaction curve plot showing compaction points used to establish compaction curve, and 100 % saturation curve, point of maximum dry unit weight and optimum water content.

12.1.12 Oversize correction data if used, including the oversize fraction (coarse fraction), P_c in %.

13. Precision and Bias

13.1 *Precision*—Data are being evaluated to determine the precision of this test method. In addition, pertinent data is being solicited from users of the test method.

13.2 *Bias*—It is not possible to obtain information on bias because there is no other method of determining the values of standard maximum dry unit weight and optimum water content.

164

14. Keywords

14.1 NT—impact compaction using standard effort; RT—density; RT—moisture-density curves; RT—proctor test; UF—compaction characteristics; UF—soil compaction; USE—laboratory tests

ANNEX

(Mandatory Information)

A1. VOLUME OF COMPACTION MOLD

A1.1 Scope

A1.1.1 This annex describes the procedure for determining the volume of a compaction mold.

A1.1.2 The volume is determined by a water-filled method and checked by a linear-measurement method.

A1.2 Apparatus

A1.2.1 In addition to the apparatus listed in Section 6 the following items are required:

A1.2.1.1 *Vernier or Dial Caliper*—having a measuring range of at least 0 to 6 in. (0 to 150 mm) and readable to at least 0.001 in. (0.02 mm).

A1.2.1.2 *Inside Micrometer*—having a measuring range of at least 2 to 12 in. (50 to 300 mm) and readable to at least 0.001 in. (0.02 mm).

A1.2.1.3 *Plastic or Glass Plates*—Two plastic or glass plates approximately 8 in. square by ¼ in. thick (200 by 200 mm by 6 mm).

A1.2.1.4 *Thermometer*—0 to 50°C range, 0.5°C graduations, conforming to the requirements of Specification E 1.

A1.2.1.5 *Stopcock grease* or similar sealant.

A1.2.1.6 *Miscellaneous equipment*—Bulb syringe, towels, etc.

A1.3 Precautions

A1.3.1 Perform this procedure in an area isolated from drafts or extreme temperature fluctuations.

A1.4 Procedure

A1.4.1 *Water-Filling Method:*

A1.4.1.1 Lightly grease the bottom of the compaction mold and place it on one of the plastic or glass plates. Lightly grease the top of the mold. Be careful not to get grease on the inside of the mold. If it is necessary to use the base plate, as noted in 10.4.7, place the greased mold onto the base plate and secure with the locking studs.

A1.4.1.2 Determine the mass of the greased mold and both plastic or glass plates to the nearest 0.01-lbm (1-g) and record. When the base plate is being used in lieu of the bottom plastic or glass plate determine the mass of the mold, base plate and a single plastic or glass plate to be used on top of the mold to the nearest 0.01-lbm (1-g) and record.

A1.4.1.3 Place the mold and the bottom plastic or glass plate on a firm, level surface and fill the mold with water to slightly above its rim.

A1.4.1.4 Slide the second plate over the top surface of the mold so that the mold remains completely filled with water and air bubbles are not entrapped. Add or remove water as necessary with a bulb syringe.

A1.4.1.5 Completely dry any excess water from the outside of the mold and plates.

A1.4.1.6 Determine the mass of the mold, plates and water and record to the nearest 0.01-lbm (1-g).

A1.4.1.7 Determine the temperature of the water in the mold to the nearest 1°C and record. Determine and record the absolute density of water from Table A1.1.

A1.4.1.8 Calculate the mass of water in the mold by subtracting the mass determined in A1.4.1.2 from the mass determined in A1.4.1.6.

A1.4.1.9 Calculate the volume of water by dividing the mass of water by the density of water and record to the nearest 0.0001 ft^3 (1 cm^3).

A1.4.1.10 When the base plate is used for the calibration of the mold volume repeat A1.4.1.3 through A1.4.1.9.

A1.4.2 *Linear Measurement Method:*

A1.4.2.1 Using either the vernier caliper or the inside micrometer, measure the diameter of the mold 6 times at the top of the mold and 6 times at the bottom of the mold, spacing each of the six top and bottom measurements equally around the circumference of the mold. Record the values to the nearest 0.001-in. (0.02-mm).

A1.4.2.2 Using the vernier caliper, measure the inside height of the mold by making three measurements equally spaced around the circumference of the mold. Record values to the nearest 0.001-in. (0.02-mm).

A1.4.2.3 Calculate the average top diameter, average bottom diameter and average height.

A1.4.2.4 Calculate the volume of the mold and record to the nearest 0.0001 ft^3 (1 cm^3) as follows:

$$V = \frac{(\pi)(h)(d_t + d_b)^2}{(16)(1728)} \text{ (inch-pound)}$$

$$V = \frac{(\pi)(h)(d_t + d_b)^2}{(16)(10^3)} \text{ (SI)}$$

TABLE A1 Density of Water[A]

Temperature, °C (°F)	Density of Water, g/ml
18 (64.4)	0.99862
19 (66.2)	0.99843
20 (68.0)	0.99823
21 (69.8)	0.99802
22 (71.6)	0.99779
23 (73.4)	0.99756
24 (75.2)	0.99733
25 (77.0)	0.99707
26 (78.8)	0.99681

[A] Values other than shown may be obtained by referring to the Handbook of Chemistry and Physics, Chemical Rubber Publishing Co., Cleveland, Ohio.

where:

V = volume of mold, ft^3 (cm^3),
h = average height, in. (mm),
d_t = average top diameter, in. (mm),
d_b = average bottom diameter, in. (mm),
$1/1728$ = constant to convert in^3 to ft^3, and
$1/10^3$ = constant to convert mm^3 to cm^3.

A1.5 Comparison of Results

A1.5.1 The volume obtained by either method should be within the volume tolerance requirements of 6.1.1 and 6.1.2.

A1.5.2 The difference between the two methods should not exceed 0.5 % of the nominal volume of the mold.

A1.5.3 Repeat the determination of volume if these criteria are not met.

A1.5.4 Failure to obtain satisfactory agreement between the two methods, even after several trials, is an indication that the mold is badly deformed and should be replaced.

A1.5.5 Use the volume of the mold determined using the water-filling method as the assigned volume value for calculating the moist and dry density (see 11.4).

The American Society for Testing and Materials takes no position respecting the validity of any patent rights asserted in connection with any item mentioned in this standard. Users of this standard are expressly advised that determination of the validity of any such patent rights, and the risk of infringement of such rights, are entirely their own responsibility.

This standard is subject to revision at any time by the responsible technical committee and must be reviewed every five years and if not revised, either reapproved or withdrawn. Your comments are invited either for revision of this standard or for additional standards and should be addressed to ASTM Headquarters. Your comments will receive careful consideration at a meeting of the responsible technical committee, which you may attend. If you feel that your comments have not received a fair hearing you should make your views known to the ASTM Committee on Standards, 1916 Race St., Philadelphia, PA 19103.

166

Designation: D 854 – 92

Standard Test Method for Specific Gravity of Soils[1]

This standard is issued under the fixed designation D 854; the number immediately following the designation indicates the year of original adoption or, in the case of revision, the year of last revision. A number in parentheses indicates the year of last reapproval. A superscript epsilon (ε) indicates an editorial change since the last revision or reapproval.

1. Scope

1.1 This test method covers the determination of the specific gravity of soils that pass the 4.75-mm (No. 4) sieve, by means of a pycnometer. When the soil contains particles larger than the 4.75-mm sieve, Test Method C 127 shall be used for the material retained on the 4.75-mm sieve and this test method shall be used for the material passing the 4.75-mm sieve.

1.1.1 Two procedures for performing the specific gravity are provided as follows:

1.1.1.1 *Method A*—Procedure for Oven-Dry Specimens, described in 9.1.

1.1.1.2 *Method B*—Procedure for Moist Specimens, described in 9.2. The procedure to be used shall be specified by the requesting authority. For specimens of organic soils and highly plastic, fine-grained soils, Procedure B shall be the preferred method.

1.2 When the specific gravity value is to be used in calculations in connection with the hydrometer portion of Test Method D 422, it is intended that the specific gravity test be made on that portion of the sample which passes the 2.00-mm (No. 10) sieve.

1.3 The values stated in acceptable metric units are to be regarded as standard.

1.4 *This standard does not purport to address all of the safety problems, if any, associated with its use. It is the responsibility of the user of this standard to establish appropriate safety and health practices and determine the applicability of regulatory limitations prior to use.*

2. Referenced Documents

2.1 *ASTM Standards:*

C 127 Test Method for Specific Gravity and Absorption of Coarse Aggregate[2]

C 670 Practice for Preparing Precision and Bias Statements for Test Methods for Construction Materials[2]

D 422 Test Method for Particle-Size Analysis of Soils[3]

D 653 Terminology Relating to Soil, Rock, and Contained Fluids[3]

D 2487 Test Method for Classification of Soils for Engineering Purposes[3]

D 4753 Specification for Evaluating, Selecting, and Specifying Balances and Scales for Use in Soil and Rock Testing[3]

E 1 Specification for ASTM Thermometers[4]

E 11 Specification for Wire-Cloth Sieves for Testing Purposes[5]

E 12 Terminology Relating to Density and Specific Gravity of Solids, Liquids, and Gases[6]

2.2 *AASHTO Standards:*[7]

AASHTO Test Method T100

3. Terminology

3.1 All definitions are in accordance with Terminology D 653 and E 12.

3.2 *Description of Term Specific to This Standard:*

3.2.1 *specific gravity*—the ratio of the mass of a unit volume of a material at a stated temperature to the mass of the same volume of gas-free distilled water at a stated temperature.

4. Significance and Use

4.1 The specific gravity of a soil is used in calculating the phase relationships of soils (that is, the relative volumes of solids to water and air in a given volume of soil).

4.2 The term solid particles is typically assumed to mean naturally occurring mineral particles that are not readily soluble in water. Therefore, the specific gravity of materials containing extraneous matter (such as cement, lime, and the like), water-soluble matter (such as sodium chloride), and soils containing matter with a specific gravity less than one, typically require special treatment or a qualified definition of their specific gravity.

5. Apparatus

5.1 *Pycnometer*—The pycnometer shall be one of the following:

5.1.1 *Volumetric Flask*, having a capacity of at least 100 mL.

5.1.2 *Stoppered Bottle*, having a capacity of at least 50 mL. The stopper shall be of the same material, and shall permit the emission of air and surplus water when it is put in place.

NOTE 1—Flask sizes of greater than the specified minimum capacity are recommended. Larger flasks are capable of holding larger specimens and tend to produce better statistical results.

[1] This test method is under the jurisdiction of ASTM Committee D-18 on Soil and Rock and is the direct responsibility of Subcommittee D18.03 on Texture, Plasticity and Density Characteristics of Soils.

Current edition approved Nov. 15, 1992. Published January 1993. Originally published as D 854 – 45. Last previous edition D 854 – 91.

[2] *Annual Book of ASTM Standards*, Vol 04.02.

[3] *Annual Book of ASTM Standards*, Vol 04.08.

[4] *Annual Book of ASTM Standards*, Vol 14.03.

[5] *Annual Book of ASTM Standards*, Vol 14.02.

[6] *Annual Book of ASTM Standards*, Vol 15.05.

[7] Available from American Association of State Highway and Transportation Officials, 444 N Capital St., NW, Washington, DC 20001.

5.2 *Balance*—Meeting the requirements of Specification D 4753 and readable, without estimation, to at least 0.1 % of the specimen mass.

5.3 *Drying Oven*—Thermostatically-controlled oven, capable of maintaining a uniform temperature of 110 ± 5°C (230 ± 9°F) throughout the drying chamber.

5.4 *Thermometer*, capable of measuring the temperature range within which the test is being performed, graduated in a 0.5°C (1.0°F) division scale and meeting the requirements of Specification E 1.

5.5 *Desiccator*—A desiccator cabinet or large desiccator jar of suitable size containing silica gel or anhydrous calcium sulfate.[8]

NOTE 2—It is preferable to use a desiccant that changes color to indicate when it needs reconstitution.

5.6 *Entrapped Air Removal Apparatus*—To remove entrapped air, use one of the following:

5.6.1 *Hot Plate or Bunsen Burner*, capable of maintaining a temperature adequate to boil water.

5.6.2 *Vacuum System*, a vacuum pump or water aspirator, capable of producing a partial vacuum of 100 min or less absolute pressure.

NOTE 3—A partial vacuum of 100 mm Hg absolute pressure is approximately equivalent to a 660 mm (26 in.) Hg reading on vacuum gauge at sea level.

5.7 *Miscellaneous Equipment*, specimen dishes and insulated gloves.

6. Reagents and Materials

6.1 *Purity of Water*—Where distilled water is referred to in this test method, either distilled or demineralized water may be used.

7. Test Specimen

7.1 The test specimen may be oven-dried or moistened soil and shall be representative of the total sample. In either case the specimen shall be large enough that its minimum mass in the oven-dried state is in accordance with the following:

Maximum Particle Size (100 % passing)	Standard Sieve Size	Minimum Mass of Test Specimen, g
2 mm	No. 10	20
4.75 mm	No. 4	100

8. Calibration of Pycnometer

8.1 Determine and record the mass of a clean, dry pycnometer, M_f.

8.2 Fill the pycnometer with distilled water to the calibration mark. Visually inspect the pycnometer and its contents to ensure that there are no air bubbles in the distilled water. Determine and record the mass of the pycnometer and water, M_a.

8.3 Insert a thermometer in the water, and determine and record its temperature, T_a, to the nearest 0.5°C (1.0°F).

8.4 From the mass, M_a, determined at the observed temperature, T_a, prepare a table of values of mass, M_a, for a series of temperatures that are likely to prevail when the mass of the pycnometer, soil, and water, M_b, is determine later. These values of M_a can be determined experimentall or may be calculated as follows:

$$M_a \text{ (at } T_x) = [(\text{density of water at } T_x/\text{density of water at } T_a) \times (M_a \text{ (at } T_a) - M_f)]$$

where:

M_a = mass of pycnometer and water, g,
M_f = mass of pycnometer, g,
T_a = observed temperature of water, °C, and
T_x = any other desired temperature, °C.

NOTE 4—This test method provides a procedure that is mo convenient for laboratories making many determinations with the san pycnometer. It is equally applicable to a single determination. Bringi the pycnometer and contents to some designated temperature wh masses M_a and M_b are taken, requires considerable time. It is importa that masses M_a and M_b be based on water at the same temperatu Values for the density of water at temperatures from 16.0 to 30.0°C a given in Table 1.

9. Procedure

9.1 *Test Method A—Procedure For Oven-Dried Spe mens:*

9.1.1 Dry the specimen to a constant mass in an ov maintained at 110 ± 5°C (230 ± 9°F) (See Note 5) and cool in a desiccator.

NOTE 5—Drying of certain soils at 110°C (230°F) may bring abo loss of water of composition or hydration, and in such cases drying m be done in reduced air pressure or at a lower temperature.

9.1.2 Determine and record the mass of a clea dr calibrated pycnometer, M_f. Select a pycnometer capacity that the volume filled to the mark will b percent greater than the space required to accomm date t test specimen. Place the specimen in the pycnomet

TABLE 1 Density of Water and Correction Factor *K* for Variou Temperatures

Temperature, °C	Density of Water (g/mL)	Correction Factor *K*
16.0	0.99897	1.0007
16.5	0.99889	1.0007
17.0	0.99880	1.0006
17.5	0.99871	1.0005
18.0	0.99862	1.0004
18.5	0.99853	1.0003
19.0	0.99843	1.0002
19.5	0.99833	1.0001
20.0	0.99823	1.0000
20.5	0.99812	0.9999
21.0	0.99802	0.9998
21.5	0.99791	0.9997
22.0	0.99780	0.9996
22.5	0.99768	0.9995
23.0	0.99757	0.9993
23.5	0.99745	0.9992
24.0	0.99732	0.9991
24.5	0.99720	0.9990
25.0	0.99707	0.9988
25.5	0.99694	0.9987
26.0	0.99681	0.9986
26.5	0.99668	0.9984
27.0	0.99654	0.9983
27.5	0.99640	0.9982
28.0	0.99626	0.998
28.5	0.99612	0.9
29.0	0.99597	
29.5	0.99582	
30.0	0.99567	

[8] Anhydrous calcium sulfate is sold under the trade name Drierite.

168

TABLE 2 Table of Precision Estimates[A]

Material and Type Index	Standard Deviation[B]		Acceptable Range of Two Results[C]	
	Passing No. 4 (4.75 mm)	Passing No. 10 (2.00 mm)	Passing No. 4 (4.75 mm)	Passing No. 10 (2.00 mm)
Single-operator precision:				
Cohesive soils	0.021	0.019	0.06	0.06
Noncohesive soils	B	B	B	B
Multilaboratory precision:				
Cohesive soils	0.056	0.041	0.16	0.12
Noncohesive soils	B	B	B	B

[A] The figures given in Columns 2 and 3 are the standard deviations that have been found to be appropriate for the materials described in Column 1. The figures given in Columns 4 and 5 are the limits that should not be exceeded by the difference between the two properly conducted tests.

[B] These numbers represent, respectively, the (1S) and (D2S) limits as described in Practice C 670.

[C] Criteria for assigning standard deviation values for noncohesive soils are not available at the present time.

Determine the mass of the specimen and pycnometer, and subtract the mass of the pycnometer, M_f, from this value to determine the mass of the oven-dry specimen, M_o.

9.1.3 Fill the pycnometer with distilled water to a level slightly above that required to cover the soil and soak the specimen for at least 12 h.

NOTE 6—For some soils containing a significant fraction of organic matter, kerosine is a better wetting agent than water and may be used in place of distilled water for oven-dried specimens. If kerosine is used, the entrapped air should only be removed by use of an aspirator. Kerosine is a flammable liquid that must be used with extreme caution.

NOTE 7—Adding distilled water to just cover the soil makes it easier to control boil-over during removal of entrapped air.

9.1.4 Remove the entrapped air by one of the following methods:

9.1.4.1 Boil the specimen gently for at least 10 min while agitating the pycnometer occasionally to assist in the removal of air. Then cool the heated specimen to room temperature.

9.1.4.2 Subject the contents to a vacuum (air pressure not exceeding 100 mm Hg) for at least 30 min (Note 8) either by connecting the pycnometer directly to an aspirator or vacuum pump or by use of a bell jar. While the vacuum is being applied, gently agitate the pycnometer periodically to assist in the removal of air. Some soils boil violently when subjected to reduced air pressure. It will be necessary in those cases to reduce the air pressure at a slower rate or to use a larger flask.

NOTE 8—Specimens with a high plasticity at the natural water content may require 6 to 8 h to remove entrapped air. Specimens with a low plasticity at the natural water content may require 4 to 6 h to remove entrapped air. Oven-dried specimens may require 2 to 4 h to remove entrapped air.

9.1.5 Fill the pycnometer to just below the calibration mark with distilled water at room temperature. Add the distilled water slowly and carefully to avoid the entrapment of air bubbles in the specimen (Note 9). Allow the pycnometer to obtain a uniform water temperature (Note 10).

NOTE 9—To avoid the entrapment of air bubbles, the distilled water may be introduced through a piece of small-diameter flexible tubing with its outlet end kept just below the surface of the distilled water in the pycnometer.

NOTE 10—To obtain a uniform water temperature the pycnometer may be allowed to sit overnight or be placed in a constant temperature bath.

9.1.6 Fill the pycnometer with distilled water at the same temperature to the mark, clean the outside, and dry with a clean, dry cloth. Determine and record the mass of the pycnometer filled with soil and water, M_b.

9.1.7 Insert a thermometer into the water, and determine and record its temperature, T_b, to the nearest 0.5°C (1.0°F).

9.2 *Test Method B—Procedure For Moist Specimens:*

9.2.1 Place the specimen in a calibrated pycnometer.

9.2.1.1 Disperse specimens of clay soils in distilled water before they are placed in the pycnometer, by use of the dispersing equipment specified in Test Method D 422. The minimum volume of slurry that can be prepared by this dispersing equipment is such that a 500-mL (or larger) flask is needed as a pycnometer.

9.2.2 Proceed as described in Sections 9.1.4 and 9.1.7.

9.2.3 Remove the specimen from the pycnometer, and dry it to a constant mass in an oven maintained at 110 ± 5°C (230 ± 9°F) (See Note 5). Cool the specimen in a desiccator.

9.2.4 Determine and record the mass of the oven-dried soil, M_o.

10. Calculation

10.1 Calculate the specific gravity of the soil, G, to the nearest 0.01, based on water at a temperature (T_b) as follows:

$$G \text{ at } T_b = M_o/[M_o + (M_a - M_b]$$

where:

M_o = mass of sample of oven-dry soil, g,
M_a = mass of pycnometer filled with water at temperature T_b (Note 11), g,
M_b = mass of pycnometer filled with water and soil at temperature T_x, g,
T_b = temperature of the contents of the pycnometer when mass M_b was determined, °C.

NOTE 11—This value can be obtained from the table of values of M_a, prepared in accordance with 6.2, for the temperatures prevailing when mass M_b was determined, °C.

NOTE 12—The equation shown in 9.1 is for computing the specific gravity of the soil tested in water. When kerosine is used, the Eq must be adjusted by multiplying the result by the specific gravity of kerosine at T_b and dividing it by the density of water at T_b.

10.2 Calculate the weighted average specific gravity for soils containing particles both larger and smaller than the 4.75-mm sieve using the following equation:

$$G_{avg} = \frac{1}{\frac{R_1}{100G_1} + \frac{P_1}{100G_2}}$$

where:

G_{avg} = weighted average specific gravity of soils composed of particles larger and smaller than the 4.75-mm sieve,
R_1 = percent of soil particles retained on 4.75-mm sieve,
P_1 = percent of soil particles passing the 4.75-mm sieve,
G_1 = apparent specific gravity of soil particles retained on the 4.75-mm sieve as determined by Test Method C 127, and

G_2 = specific gravity of soil particles passing the 4.75-mm sieve as determined by this test method.

10.3 Unless otherwise required, specific gravity (G) values reported shall be based on water at 20°C. Calculate the value based on water at 20°C from the value based on water at the observed temperature T_b, as follows:

$$G \text{ at } 20°C = K \times (G \text{ at } T_b)$$

where:

K = a number found by dividing the density of water at temperature T_b by the density of water at 20°C. Values for the range of temperatures are given in Table 1.

10.4 In some cases, it is desired to report the specific gravity value based on water at a different temperature. In these cases, the specific gravity value, based on any temperature T_x, may be calculated as follows:

$$G \text{ at } T_x = \frac{G \text{ at } 20°C}{K}$$

11. Report

11.1 The report (data sheet) shall include the following:

11.1.1 Identification of the sample (material) being tested, such as boring number, sample number, test number, etc.

11.1.2 Specific gravity at 20°C to the nearest 0.01. Test procedure used (A or B).

11.1.3 Maximum particle size of the test specimen.

11.1.4 Specific gravity to the nearest 0.01 at a specified temperature other than 20°C, if applicable.

11.1.5 Type of fluid used, if other than distilled water.

11.1.6 When any portion of the original sample of soil is eliminated in the preparation of the test specimen, the portion on which the test has been made shall be reported.

12. Precision and Bias

12.1 *Precision*—Criteria for judging the acceptability of specific gravity test results obtained by this test method on material passing the 4.75-mm sieve are given as follows:

12.2 *Statement of Precision*—Criteria for judging the acceptability of specific gravity test results obtained by this test method on material passing the 4.75 (No. 4) or 2.00 mm (No. 10) sieve are given in Table 2. The estimates of precision for material passing the 2.00 mm sieve are based on results from the AASHTO Materials Reference Laboratory (AMRL) Proficiency Sample Program, of testing conducted on material passing the 2.00 (No. 10) sieve by this test method and AASHTO Test Method T100.

12.3 *Bias*—There is no acceptable reference value for this test method; therefore, bias cannot be determined.

13. Keywords

13.1 soil; specific gravity

The American Society for Testing and Materials takes no position respecting the validity of any patent rights asserted in connection with any item mentioned in this standard. Users of this standard are expressly advised that determination of the validity of any such patent rights, and the risk of infringement of such rights, are entirely their own responsibility.

This standard is subject to revision at any time by the responsible technical committee and must be reviewed every five years and if not revised, either reapproved or withdrawn. Your comments are invited either for revision of this standard or for additional standards and should be addressed to ASTM Headquarters. Your comments will receive careful consideration at a meeting of the responsible technical committee, which you may attend. If you feel that your comments have not received a fair hearing you should make your views known to the ASTM Committee on Standards, 1916 Race St., Philadelphia, PA 19103.

Designation: D 1452 – 80 (Reapproved 1990)[ε1]

Standard Practice for Soil Investigation and Sampling by Auger Borings[1]

This standard is issued under the fixed designation D 1452; the number immediately following the designation indicates the year of original adoption or, in the case of revision, the year of last revision. A number in parentheses indicates the year of last reapproval. A superscript epsilon (ε) indicates an editorial change since the last revision or reapproval.

This standard has been approved for use by agencies of the Department of Defense. Consult the DoD Index of Specifications and Standards for the specific year of issue which has been adopted by the Department of Defense.

[ε1] NOTE—Section 6 was added editorially in July 1990.

1. Scope

1.1 This practice covers equipment and procedures for the use of earth augers in shallow geotechnical exploration. This practice does not apply to sectional continuous flight augers.

1.2 *This standard does not purport to address the safety problems associated with its use. It is the responsibility of the user of this standard to establish appropriate safety and health practices and determine the applicability of regulatory limitations prior to use.*

2. Significance and Use

2.1 Auger borings often provide the simplest method of soil investigation and sampling. They may be used for any purpose where disturbed samples can be used and are valuable in connection with ground water level determination and indication of changes in strata and advancement of hole for spoon and tube sampling. Equipment required is simple and readily available. Depths of auger investigations are, however, limited by ground water conditions, soil characteristics, and the equipment used.

3. Apparatus

3.1 *Hand-Operated Augers*:

3.1.1 *Helical Augers*—Small lightweight augers generally available in sizes from 1 through 3 in. (25.4 through 76.2 mm).

3.1.1.1 *Spiral-Type Auger*, consisting of a flat thin metal strip, machine twisted to a spiral configuration of uniform pitch; having at one end, a sharpened or hardened point, with a means of attaching a shaft or extension at the opposite end.

3.1.1.2 *Ship-Type Auger*—Similar to a carpenter's wood bit. It is generally forged from steel and machined to the desired size and configuration. It is normally provided with sharpened and hardened nibs at the point end and with an integral shaft extending through its length for attachment of a handle or extension at the opposite end.

3.1.2 *Open Tubular Augers*, ranging in size from 1.5 through 8 in. (38.1 through 203.2 mm) and having the common characteristic of appearing essentially tubular when viewed from the digging end.

3.1.2.1 *Orchard-Barrel Type*, consisting essentially of a tube having cutting lips or nibs hardened and sharpened to penetrate the formation on one end and an adaptor fitting for an extension or handle on the opposite end.

3.1.2.2 *Open-Spiral Type*, consisting of a flat thin metal strip that has been helically wound around a circular mandrel to form a spiral in which the flat faces of the strip are parallel to the axis of the augered hole. The lower helix edges are hard-faced to improve wear characteristics. The opposite end is fitted with an adaptor for extension.

3.1.2.3 *Closed-Spiral Type*—Nearly identical to the open-spiral type except, the pitch of the helically wound spiral is much less than that of the open-spiral type.

3.1.3 *Post-Hole Augers*, generally 2 through 8 in. (50.8 through 203.2 mm), and having in common a means of blocking the escape of soil from the auger.

3.1.3.1 *Clam-Shell Type*, consisting of two halves, hinged to allow opening and closing for alternately digging and retrieving. It is not usable deeper than about 3.5 ft (1.07 m).

3.1.3.2 *Iwan Type*, consisting of two tubular steel segments, connected at the top to a common member to form a nearly complete tube, but with diametrically opposed openings. It is connected at the bottom by two radial blades pitched to serve as cutters which also block the escape of contained soil. Attachment of handle or extension is at the top connector.

3.2 *Machine-Operated Augers*:

3.2.1 *Helical Augers*, generally 8 through 48 in. (203.2 through 1219 mm), consisting essentially of a center shaft fitted with a shank or socket for application of power, and having one to three complete 360° (6.28-rad) spirals for conveyance and storage of cut soil. Cutter bits and pilot bits are available in moderate and hard formation types and normally replaceable in the field. They are normally operated by heavy-duty, high-torque machines, designed for heavy construction work.

3.2.2 *Stinger Augers*, generally 6 through 30 in. (152.4 through 762 mm), are similar to the helical auger in 3.2.1, but lighter and generally smaller. They are commonly operated by light-duty machines for post and power pole holes.

3.2.3 *Disk Augers*, generally 10 through 30 in. (254 through 762 mm), consisting essentially of a flat, steel disk with diametrically opposed segments removed and having a

[1] This practice is under the jurisdiction of ASTM Committee D-18 on Soil and Rock and is the direct responsibility of Subcommittee D18.02 on Sampling and Related Field Testing for Soil Investigations.

Current edition approved June 12, 1980. Published August 1980. Originally published as D 1452 – 57 T. Last previous edition D 1452 – 65 (1972).

shank or socket located centrally for application of power. Replaceable cutter bits, located downward from the leading edges of the remaining disk, dig and load soil that is held on the disk by valves or shutters hinged at the disk in order to close the removed segments. The disk auger is specifically designed to be operated by machines having limited vertical clearance between spindle and ground surface.

3.2.4 *Bucket Auger*, generally 12 through 48 in. (304.8 through 1219 mm), consisting essentially of a disk auger, without shank or socket, but hinge-mounted to the bottom of a steel tube or bucket of approximately the same diameter as the disk auger. A socket or shank for power application is located in the top center of the bucket diametral cross piece provided for the purpose.

3.3 *Casing* (when needed), consisting of pipe of slightly larger diameter than the auger used.

3.4 *Accessory Equipment*—Labels, field log sheets, sample jars, sealing wax, sample bags, and other necessary tools and supplies.

4. Procedure

4.1 Make the auger boring by rotating and advancing the desired distance into the soil. Withdraw the auger from the hole and remove the soil for examination and test. Return the empty auger to the hole and repeat the procedure. Continue the sequence until the required depth is reached.

4.2 Casing is required in unstable soil in which the bore hole fails to stay open and especially when the boring is extended below the ground-water level. The inside diameter of the casing must be slightly larger than the diameter of the auger used. The casing shall be driven to a depth not greater than the top of the next sample and shall be cleaned out by means of the auger. The auger can then be inserted into the bore hole and turned below the bottom of the casing to obtain a sample.

4.3 The soil auger can be used both for boring the hole and for bringing up disturbed samples of the soil encountered. The structure of a cohesive soil is completely destroyed and the moisture may be changed by the auger. Seal all samples in a jar or other airtight container and label appropriately. If more than one type of soil is picked up in the sample, prepare a separate container for each type of soil.

4.4 *Field Observations*—Record complete ground water information in the field logs. Where casing is used, measure ground water levels, both before and after the casing is pulled. In sands, determine the water level at least 30 min after the boring is completed; in silts, at least 24 h. In clays, no accurate water level determination is possible unless pervious seams are present. As a precaution, however, water levels in clays shall be taken after at least 24 h.

5. Report

5.1 The data obtained in boring shall be recorded in the field logs and shall include the following:

5.1.1 Date of start and completion of boring,

5.1.2 Identifying number of boring,

5.1.3 Reference datum including direction and distance of boring relative to reference line of project or other suitable reference points,

5.1.4 Type and size of auger used in boring,

5.1.5 Depth of changes in strata,

5.1.6 Description of soil in each major stratum,

5.1.7 Ground water elevation and location of seepage zones, when found, and

5.1.8 Condition of augered hole upon removal of auger, that is, whether the hole remains open or the sides cave, when such can be observed.

6. Keywords

Auger borings; sampling; soil investigations

The American Society for Testing and Materials takes no position respecting the validity of any patent rights asserted in connection with any item mentioned in this standard. Users of this standard are expressly advised that determination of the validity of any such patent rights, and the risk of infringement of such rights, are entirely their own responsibility.

This standard is subject to revision at any time by the responsible technical committee and must be reviewed every five years and if not revised, either reapproved or withdrawn. Your comments are invited either for revision of this standard or for additional standards and should be addressed to ASTM Headquarters. Your comments will receive careful consideration at a meeting of the responsible technical committee, which you may attend. If you feel that your comments have not received a fair hearing you should make your views known to the ASTM Committee on Standards, 1916 Race St., Philadelphia, PA 19103.

172

Designation: D 1586 - 84 (Reapproved 1992)$^{\epsilon 1}$

Standard Test Method for Penetration Test and Split-Barrel Sampling of Soils[1]

This standard is issued under the fixed designation D 1586; the number immediately following the designation indicates the year of original adoption or, in the case of revision, the year of last revision. A number in parentheses indicates the year of last reapproval. A superscript epsilon (ε) indicates an editorial change since the last revision or reapproval.

This standard has been approved for use by agencies of the Department of Defense. Consult the DOD Index of Specifications and Standards for the specific year of issue which has been adopted by the Department of Defense.

$^{\epsilon 1}$NOTE—Editorial changes were made throughout October 1992.

1. Scope

1.1 This test method describes the procedure, generally known as the Standard Penetration Test (SPT), for driving a split-barrel sampler to obtain a representative soil sample and a measure of the resistance of the soil to penetration of the sampler.

1.2 *This standard does not purport to address all of the safety problems, if any, associated with its use. It is the responsibility of the user of this standard to establish appropriate safety and health practices and determine the applicability of regulatory limitations prior to use.* For a specific precautionary statement, see 5.4.1.

1.3 The values stated in inch-pound units are to be regarded as the standard.

2. Referenced Documents

2.1 *ASTM Standards:*

D 2487 Test Method for Classification of Soils for Engineering Purposes[2]

D 2488 Practice for Description and Identification of Soils (Visual-Manual Procedure)[2]

D 4220 Practices for Preserving and Transporting Soil Samples[2]

D 4633 Test Method for Stress Wave Energy Measurement for Dynamic Penetrometer Testing Systems[2]

3. Terminology

3.1 *Descriptions of Terms Specific to This Standard*

3.1.1 *anvil*—that portion of the drive-weight assembly which the hammer strikes and through which the hammer energy passes into the drill rods.

3.1.2 *cathead*—the rotating drum or windlass in the rope-cathead lift system around which the operator wraps a rope to lift and drop the hammer by successively tightening and loosening the rope turns around the drum.

3.1.3 *drill rods*—rods used to transmit downward force and torque to the drill bit while drilling a borehole.

3.1.4 *drive-weight assembly*—a device consisting of the hammer, hammer fall guide, the anvil, and any hammer drop system.

3.1.5 *hammer*—that portion of the drive-weight assembly consisting of the 140 ± 2 lb (63.5 ± 1 kg) impact weight which is successively lifted and dropped to provide the energy that accomplishes the sampling and penetration.

3.1.6 *hammer drop system*—that portion of the drive-weight assembly by which the operator accomplishes the lifting and dropping of the hammer to produce the blow.

3.1.7 *hammer fall guide*—that part of the drive-weight assembly used to guide the fall of the hammer.

3.1.8 *N-value*—the blowcount representation of the penetration resistance of the soil. The *N*-value, reported in blows per foot, equals the sum of the number of blows required to drive the sampler over the depth interval of 6 to 18 in. (150 to 450 mm) (see 7.3).

3.1.9 ΔN—the number of blows obtained from each of the 6-in. (150-mm) intervals of sampler penetration (see 7.3).

3.1.10 *number of rope turns*—the total contact angle between the rope and the cathead at the beginning of the operator's rope slackening to drop the hammer, divided by 360° (see Fig. 1).

3.1.11 *sampling rods*—rods that connect the drive-weight assembly to the sampler. Drill rods are often used for this purpose.

3.1.12 *SPT*—abbreviation for Standard Penetration Test, a term by which engineers commonly refer to this method.

4. Significance and Use

4.1 This test method provides a soil sample for identification purposes and for laboratory tests appropriate for soil obtained from a sampler that may produce large shear strain disturbance in the sample.

4.2 This test method is used extensively in a great variety of geotechnical exploration projects. Many local correlations and widely published correlations which relate SPT blowcount, or *N*-value, and the engineering behavior of earthworks and foundations are available.

5. Apparatus

5.1 *Drilling Equipment*—Any drilling equipment that provides at the time of sampling a suitably clean open hole before insertion of the sampler and ensures that the penetration test is performed on undisturbed soil shall be acceptable. The following pieces of equipment have proven to be

[1] This method is under the jurisdiction of ASTM Committee D-18 on Soil and Rock and is the direct responsibility of Subcommittee D18.02 on Sampling and Related Field Testing for Soil Investigations.

Current edition approved Sept. 11, 1984. Published November 1984. Originally published as D 1586 - 58 T. Last previous edition D 1586 - 67 (1974).

[2] *Annual Book of ASTM Standards*, Vol 04.08.

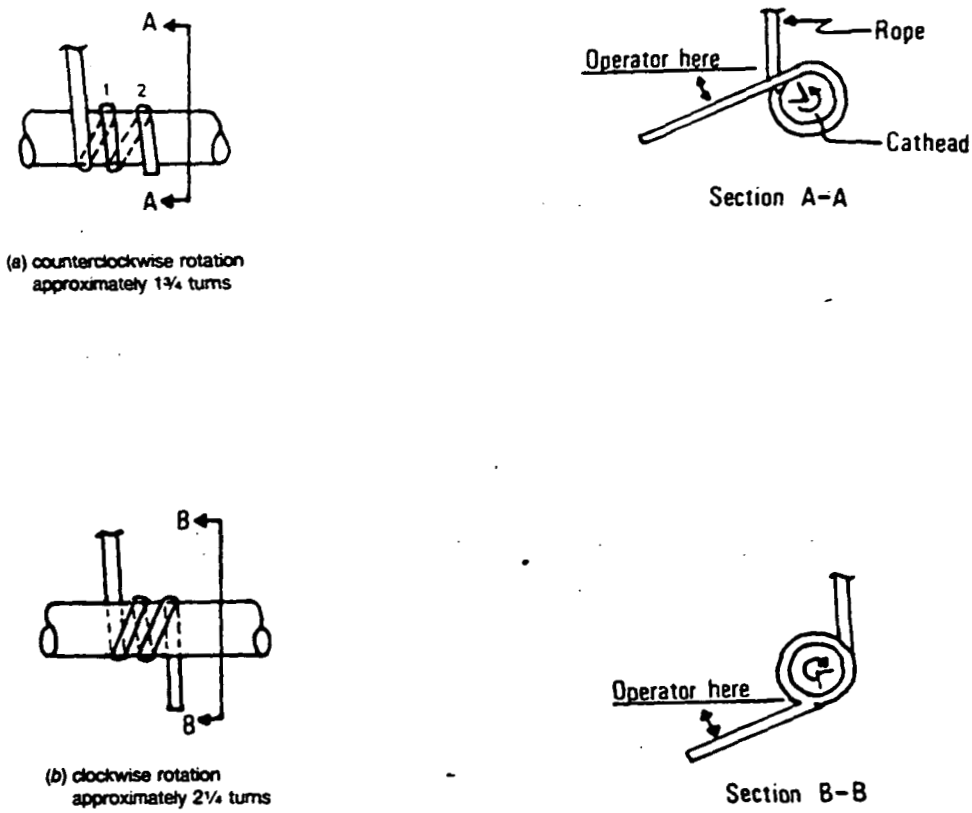

FIG. 1 Definitions of the Number of Rope Turns and the Angle for (a) Counterclockwise Rotation and (b) Clockwise Rotation of the Cathead

suitable for advancing a borehole in some subsurface conditions.

5.1.1 *Drag, Chopping, and Fishtail Bits*, less than 6.5 in. (162 mm) and greater than 2.2 in. (56 mm) in diameter may be used in conjuction with open-hole rotary drilling or casing-advancement drilling methods. To avoid disturbance of the underlying soil, bottom discharge bits are not permitted; only side discharge bits are permitted.

5.1.2 *Roller-Cone Bits*, less than 6.5 in. (162 mm) and greater than 2.2 in. (56 mm) in diameter may be used in conjunction with open-hole rotary drilling or casing-advancement drilling methods if the drilling fluid discharge is deflected.

5.1.3 *Hollow-Stem Continuous Flight Augers*, with or without a center bit assembly, may be used to drill the boring. The inside diameter of the hollow-stem augers shall be less than 6.5 in. (162 mm) and greater than 2.2 in. (56 mm).

5.1.4 *Solid, Continuous Flight, Bucket and Hand Augers*, less than 6.5 in. (162 mm) and greater than 2.2 in. (56 mm) in diameter may be used if the soil on the side of the boring does not cave onto the sampler or sampling rods during sampling.

5.2 *Sampling Rods*—Flush-joint steel drill rods shall be used to connect the split-barrel sampler to the drive-weight assembly. The sampling rod shall have a stiffness (moment of inertia) equal to or greater than that of parallel wall "A" rod (a steel rod which has an outside diameter of 1⅝ in. (41.2 mm) and an inside diameter of 1⅛ in. (28.5 mm).

NOTE 1—Recent research and comparative testing indicates the type rod used, with stiffness ranging from "A" size rod to "N" size rod, will usually have a negligible effect on the *N*-values to depths of at least 100 ft (30 m).

5.3 *Split-Barrel Sampler*—The sampler shall be constructed with the dimensions indicated in Fig. 2. The driving shoe shall be of hardened steel and shall be replaced or repaired when it becomes dented or distorted. The use of liners to produce a constant inside diameter of 1⅜ in. (35 mm) is permitted, but shall be noted on the penetration record if used. The use of a sample retainer basket is permitted, and should also be noted on the penetration record if used.

NOTE 2—Both theory and available test data suggest that *N*-values may increase between 10 to 30 % when liners are used.

5.4 *Drive-Weight Assembly:*

5.4.1 *Hammer and Anvil*—The hammer shall weigh 140 ± 2 lb (63.5 ± 1 kg) and shall be a solid rigid metallic mass. The hammer shall strike the anvil and make steel on steel contact when it is dropped. A hammer fall guide permitting a free fall shall be used. Hammers used with the cathead and rope method shall have an unimpeded overlift capacity of at least 4 in. (100 mm). For safety reasons, the use of a hammer assembly with an internal anvil is encouraged.

NOTE 3—It is suggested that the hammer fall guide be permanently marked to enable the operator or inspector to judge the hammer drop height.

5.4.2 *Hammer Drop System*—Rope-cathead, trip, semi-automatic, or automatic hammer drop systems may be used, providing the lifting apparatus will not cause penetration of

174

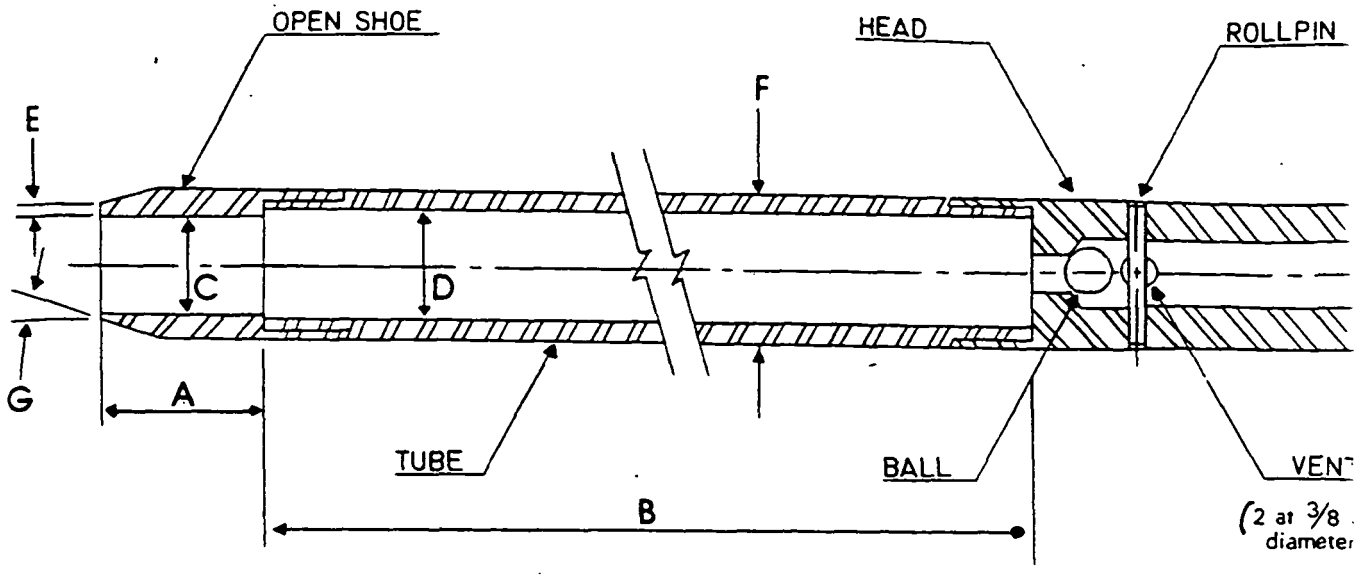

A = 1.0 to 2.0 in. (25 to 50 mm)
B = 18.0 to 30.0 in. (0.457 to 0.762 m)
C = 1.375 ± 0.005 in. (34.93 ± 0.13 mm)
D = 1.50 ± 0.05 − 0.00 in. (38.1 ± 1.3 − 0.0 mm)
E = 0.10 ± 0.02 in. (2.54 ± 0.25 mm)
F = 2.00 ± 0.05 − 0.00 in. (50.8 ± 1.3 − 0.0 mm)
G = 16.0° to 23.0°

The 1½ in. (38 mm) inside diameter split barrel may be used with a 16-gage wall thickness split liner. The penetrating end of the drive shoe may be slightly rounded. M or plastic retainers may be used to retain soil samples.

FIG. 2 Split-Barrel Sampler

the sampler while re-engaging and lifting the hammer.

5.5 *Accessory Equipment*—Accessories such as labels, sample containers, data sheets, and groundwater level measuring devices shall be provided in accordance with the requirements of the project and other ASTM standards.

6. Drilling Procedure

6.1 The boring shall be advanced incrementally to permit intermittent or continuous sampling. Test intervals and locations are normally stipulated by the project engineer or geologist. Typically, the intervals selected are 5 ft (1.5 mm) or less in homogeneous strata with test and sampling locations at every change of strata.

6.2 Any drilling procedure that provides a suitably clean and stable hole before insertion of the sampler and assures that the penetration test is performed on essentially undisturbed soil shall be acceptable. Each of the following procedures have proven to be acceptable for some subsurface conditions. The subsurface conditions anticipated should be considered when selecting the drilling method to be used.

6.2.1 Open-hole rotary drilling method.

6.2.2 Continuous flight hollow-stem auger method.

6.2.3 Wash boring method.

6.2.4 Continuous flight solid auger method.

6.3 Several drilling methods produce unacceptable borings. The process of jetting through an open tube sampler and then sampling when the desired depth is reached shall not be permitted. The continuous flight solid auger method shall not be used for advancing the boring below a water table or below the upper confining bed of a confined non-cohesive stratum that is under artesian pressure. Casing may not be advanced below the sampling elevation prior sampling. Advancing a boring with bottom discharge bits not permissible. It is not permissible to advance the bori for subsequent insertion of the sampler solely by means previous sampling with the SPT sampler.

6.4 The drilling fluid level within the boring or hollc stem augers shall be maintained at or above the in s groundwater level at all times during drilling, removal of d rods, and sampling.

7. Sampling and Testing Procedure

7.1 After the boring has been advanced to the desir sampling elevation and excessive cuttings have been : moved, prepare for the test with the following sequence operations.

7.1.1 Attach the split-barrel sampler to the sampling rc and lower into the borehole. Do not allow the sampler drop onto the soil to be sampled.

7.1.2 Position the hammer above and attach the anvil the top of the sampling rods. This may be done before t sampling rods and sampler are lowered into the borehole.

7.1.3 Rest the dead weight of the sampler, rods, anvil, a drive weight on the bottom of the boring and apply a seati: blow. If excessive cuttings are encountered at the bottom the boring, remove the sampler and sampling rods from t boring and remove the cuttings.

7.1.4 Mark the drill rods in three successive 6-in. (0.15-r increments so that the advance of the sampler under tl impact of the hammer can be easily observed for each 6-i (0.15-m) increment.

7.2 Drive the sampler with blows from the 140-lb (63..

kg) hammer and count the number of blows applied in each 6-in. (0.15-m) increment until one of the following occurs:

7.2.1 A total of 50 blows have been applied during any one of the three 6-in. (0.15-m) increments described in 7.1.4.

7.2.2 A total of 100 blows have been applied.

7.2.3 There is no observed advance of the sampler during the application of 10 successive blows of the hammer.

7.2.4 The sampler is advanced the complete 18 in. (0.45 m) without the limiting blow counts occurring as described in 7.2.1, 7.2.2, or 7.2.3.

7.3 Record the number of blows required to effect each 6 in. (0.15 m) of penetration or fraction thereof. The first 6 in. is considered to be a seating drive. The sum of the number of blows required for the second and third 6 in. of penetration is termed the "standard penetration resistance," or the "*N*-value." If the sampler is driven less than 18 in. (0.45 m), as permitted in 7.2.1, 7.2.2, or 7.2.3, the number of blows per each complete 6-in. (0.15-m) increment and per each partial increment shall be recorded on the boring log. For partial increments, the depth of penetration shall be reported to the nearest 1 in. (25 mm), in addition to the number of blows. If the sampler advances below the bottom of the boring under the static weight of the drill rods or the weight of the drill rods plus the static weight of the hammer, this information should be noted on the boring log.

7.4 The raising and dropping of the 140-lb (63.5-kg) hammer shall be accomplished using either of the following two methods:

7.4.1 By using a trip, automatic, or semi-automatic hammer drop system which lifts the 140-lb (63.5-kg) hammer and allows it to drop 30 ± 1.0 in. (0.76 m ± 25 mm) unimpeded.

7.4.2 By using a cathead to pull a rope attached to the hammer. When the cathead and rope method is used the system and operation shall conform to the following:

7.4.2.1 The cathead shall be essentially free of rust, oil, or grease and have a diameter in the range of 6 to 10 in. (150 to 250 mm).

7.4.2.2 The cathead should be operated at a minimum speed of rotation of 100 RPM, or the approximate speed of rotation shall be reported on the boring log.

7.4.2.3 No more than 2¼ rope turns on the cathead may be used during the performance of the penetration test, as shown in Fig. 1.

NOTE 4—The operator should generally use either 1¾ or 2¼ rope turns, depending upon whether or not the rope comes off the top (1¾ turns) or the bottom (2¼ turns) of the cathead. It is generally known and accepted that 2¾ or more rope turns considerably impedes the fall of the hammer and should not be used to perform the test. The cathead rope should be maintained in a relatively dry, clean, and unfrayed condition.

7.4.2.4 For each hammer blow, a 30-in. (0.76-m) lift and drop shall be employed by the operator. The operation of pulling and throwing the rope shall be performed rhythmically without holding the rope at the top of the stroke.

7.5 Bring the sampler to the surface and open. Record the percent recovery or the length of sample recovered. Describe the soil samples recovered as to composition, color, stratification, and condition, then place one or more representative portions of the sample into sealable moisture-proof containers (jars) without ramming or distorting any apparent stratification. Seal each container to prevent evaporation of soil moisture. Affix labels to the containers bearing job designation, boring number, sample depth, and the blow count per 6-in. (0.15-m) increment. Protect the samples against extreme temperature changes. If there is a soil change within the sampler, make a jar for each stratum and note its location in the sampler barrel.

8. Report

8.1 Drilling information shall be recorded in the field and shall include the following:

8.1.1 Name and location of job,

8.1.2 Names of crew,

8.1.3 Type and make of drilling machine,

8.1.4 Weather conditions,

8.1.5 Date and time of start and finish of boring,

8.1.6 Boring number and location (station and coordinates, if available and applicable),

8.1.7 Surface elevation, if available,

8.1.8 Method of advancing and cleaning the boring,

8.1.9 Method of keeping boring open,

8.1.10 Depth of water surface and drilling depth at the time of a noted loss of drilling fluid, and time and date when reading or notation was made,

8.1.11 Location of strata changes,

8.1.12 Size of casing, depth of cased portion of boring,

8.1.13 Equipment and method of driving sampler,

8.1.14 Type sampler and length and inside diameter of barrel (note use of liners),

8.1.15 Size, type, and section length of the sampling rods, and

8.1.16 Remarks.

8.2 Data obtained for each sample shall be recorded in the field and shall include the following:

8.2.1 Sample depth and, if utilized, the sample number,

8.2.2 Description of soil,

8.2.3 Strata changes within sample,

8.2.4 Sampler penetration and recovery lengths, and

8.2.5 Number of blows per 6-in. (0.15-m) or partial increment.

9. Precision and Bias

9.1 *Precision*—A valid estimate of test precision has not been determined because it is too costly to conduct the necessary inter-laboratory (field) tests. Subcommittee D18.02 welcomes proposals to allow development of a valid precision statement.

9.2 *Bias*—Because there is no reference material for this test method, there can be no bias statement.

9.3 Variations in *N*-values of 100 % or more have been observed when using different standard penetration test apparatus and drillers for adjacent borings in the same soil formation. Current opinion, based on field experience, indicates that when using the same apparatus and driller, *N*-values in the same soil can be reproduced with a coefficient of variation of about 10 %.

9.4 The use of faulty equipment, such as an extremely massive or damaged anvil, a rusty cathead, a low speed cathead, an old, oily rope, or massive or poorly lubricated rope sheaves can significantly contribute to differences in *N*-values obtained between operator-drill rig systems.

176

9.5 The variability in N-values produced by different drill rigs and operators may be reduced by measuring that part of the hammer energy delivered into the drill rods from the sampler and adjusting N on the basis of comparative energies. A method for energy measurement and N-value adjustment is given in Test Method D 4633.

10. Keywords

10.1 blow count; in-situ test; penetration resistance; split-barrel sampling; standard penetration test

The American Society for Testing and Materials takes no position respecting the validity of any patent rights asserted in connection with any item mentioned in this standard. Users of this standard are expressly advised that determination of the validity of any such patent rights, and the risk of infringement of such rights, are entirely their own responsibility.

This standard is subject to revision at any time by the responsible technical committee and must be reviewed every five years and if not revised, either reapproved or withdrawn. Your comments are invited either for revision of this standard or for additional standards and should be addressed to ASTM Headquarters. Your comments will receive careful consideration at a meeting of the responsible technical committee, which you may attend. If you feel that your comments have not received a fair hearing you should make your views known to the ASTM Committee on Standards, 1916 Race St., Philadelphia, PA 19103.

Designation: D 1587 – 83

Standard Practice for Thin-Walled Tube Sampling of Soils[1]

This standard is issued under the fixed designation D 1587; the number immediately following the designation indicates the year of original adoption or, in the case of revision, the year of last revision. A number in parentheses indicates the year of last reapproval. A superscript epsilon (ε) indicates an editorial change since the last revision or reapproval.

This practice has been approved for use by agencies of the Department of Defense and for listing in the DOD Index of Specifications and Standards.

1. Scope

1.1 This practice covers a procedure for using a thin-walled metal tube to recover relatively undisturbed soil samples suitable for laboratory tests of structural properties. Thin-walled tubes used in piston, plug, or rotary-type samplers, such as the Denison or Pitcher, must comply with the portions of this practice which describe the thin-walled tubes (5.3).

NOTE 1—This practice does not apply to liners used within the above samplers.

2. Referenced Documents

2.1 *ASTM Standards:*

D 2488 Practice for Description and Identification of Soils (Visual-Manual Procedure)[2]

D 3550 Practice for Ring-Lined Barrel Sampling of Soils[2]

D 4220 Practices for Preserving and Transporting Soil Samples[2]

3. Summary of Practice

3.1 A relatively undisturbed sample is obtained by pressing a thin-walled metal tube into the in-situ soil, removing the soil-filled tube, and sealing the ends to prevent the soil from being disturbed or losing moisture.

4. Significance and Use

4.1 This practice, or Practice D 3550, is used when it is necessary to obtain a relatively undisturbed specimen suitable for laboratory tests of structural properties or other tests that might be influenced by soil disturbance.

5. Apparatus

5.1 *Drilling Equipment*—Any drilling equipment may be used that provides a reasonably clean hole; that does not disturb the soil to be sampled; and that does not hinder the penetration of the thin-walled sampler. Open borehole diameter and the inside diameter of driven casing or hollow stem auger shall not exceed 3.5 times the outside diameter of the thin-walled tube.

5.2 *Sampler Insertion Equipment,* shall be adequate to provide a relatively rapid continuous penetration force. For hard formations it may be necessary, although not recommended, to drive the thin-walled tube sampler.

5.3 *Thin-Walled Tubes,* should be manufactured as shown in Fig. 1. They should have an outside diameter of 2 to 5 in. and be made of metal having adequate strength for use in the soil and formation intended. Tubes shall be clean and free of all surface irregularities including projecting weld seams.

5.3.1 *Length of Tubes*—See Table 1 and 6.4.

5.3.2 *Tolerances,* shall be within the limits shown in Table 2.

5.3.3 *Inside Clearance Ratio,* should be 1 % or as specified by the engineer or geologist for the soil and formation to be sampled. Generally, the inside clearance ratio used should increase with the increase in plasticity of the soil being sampled. See Fig. 1 for definition of inside clearance ratio.

5.3.4 *Corrosion Protection*—Corrosion, whether from galvanic or chemical reaction, can damage or destroy both the thin-walled tube and the sample. Severity of damage is a function of time as well as interaction between the sample and the tube. Thin-walled tubes should have some form of protective coating. Tubes which will contain samples for more than 72 h shall be coated. The type of coating to be used may vary depending upon the material to be sampled. Coatings may include a light coat of lubricating oil, lacquer, epoxy, Teflon, and others. Type of coating must be specified by the engineer or geologist if storage will exceed 72 h. Plating of the tubes or alternate base metals may be specified by the engineer or geologist.

5.4 *Sampler Head,* serves to couple the thin-walled tube to the insertion equipment and, together with the thin-walled tube, comprises the thin-walled tube sampler. The sampler head shall contain a suitable check valve and a venting area to the outside equal to or greater than the area through the check valve. Attachment of the head to the tube shall be concentric and coaxial to assure uniform application of force to the tube by the sampler insertion equipment.

6. Procedure

6.1 Clean out the borehole to sampling elevation using whatever method is preferred that will ensure the material to be sampled is not disturbed. If groundwater is encountered, maintain the liquid level in the borehole at or above ground water level during the sampling operation.

6.2 Bottom discharge bits are not permitted. Side discharge bits may be used, with caution. Jetting through an open-tube sampler to clean out the borehole to sampling elevation is not permitted. Remove loose material from the center of a casing or hollow stem auger as carefully as

[1] This practice is under the jurisdiction of ASTM Committee D-18 on Soil and Rock and is the direct responsibility of Subcommittee D18.02 on Sampling and Related Field Testing for Soil Investigations.

Current edition approved Aug. 17, 1983. Published October 1983. Originally published as D 1587 – 58 T. Last previous edition D 1587 – 74.

[2] *Annual Book of ASTM Standards,* Vol 04.08.

178

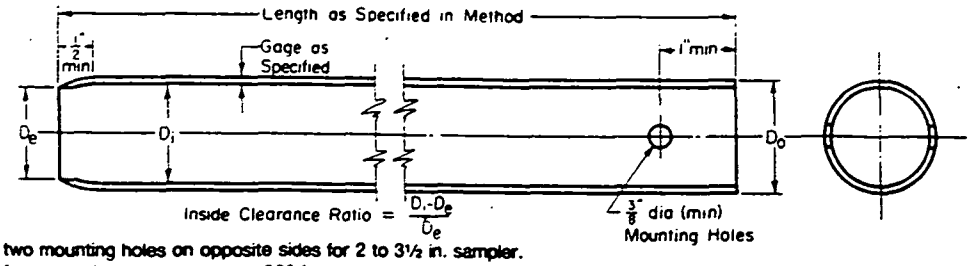

NOTE 1—Minimum of two mounting holes on opposite sides for 2 to 3½ in. sampler.
NOTE 2—Minimum of four mounting holes spaced at 90° for samplers 4 in. and larger.
NOTE 3—Tube held with hardened screws.
NOTE 4—Two-inch outside-diameter tubes are specified with an 18-gage wall thickness to comply with area ratio criteria accepted for "undisturbed samples." Users are advised that such tubing is difficult to locate and can be extremely expensive in small quantities. Sixteen-gage tubes are generally readily available.

Metric Equivalents

in.	mm
⅜	6.77
½	12.7
1	25.4
2	50.8
3½	88.9
4	101.6

FIG. 1 Thin-Walled Tube for Sampling

TABLE 1 Suitable Thin-Walled Steel Sample Tubes[A]

Outside diameter:			
in.	2	3	5
mm	50.8	76.2	127
Wall thickness:			
Bwg	18	16	11
in.	0.049	0.065	0.120
mm	1.24	1.65	3.05
Tube length:			
in.	36	36	54
m	0.91	0.91	1.45
Clearance ratio, %	1	1	1

[A] The three diameters recommended in Table 1 are indicated for purposes of standardization, and are not intended to indicate that sampling tubes of intermediate or larger diameters are not acceptable. Lengths of tubes shown are illustrative. Proper lengths to be determined as suited to field conditions.

TABLE 2 Dimensional Tolerances for Thin-Walled Tubes

Nominal Tube Diameters from Table 1[A] Tolerances, in.			
Size Outside Diameter	2	3	5
Outside diameter	+0.007 −0.000	+0.010 −0.000	+0.015 −0.000
Inside diameter	+0.000 −0.007	+0.000 −0.010	+0.000 −0.015
Wall thickness	±0.007	±0.010	±0.015
Ovality	0.015	0.020	0.030
Straightness	0.030/ft	0.030/ft	0.030/ft

[A] Intermediate or larger diameters should be proportional. Tolerances shown are essentially standard commercial manufacturing tolerances for seamless steel mechanical tubing. Specify only two of the first three tolerances; that is, O.D. and I.D., or O.D. and Wall, or I.D. and Wall.

possible to avoid disturbance of the material to be sampled.

NOTE 2—Roller bits are available in downward-jetting and diffused-jet configurations. Downward-jetting configuration rock bits are not acceptable. Diffuse-jet configurations are generally acceptable.

6.3 Place the sample tube so that its bottom rests on the bottom of the hole. Advance the sampler without rotation by a continuous relatively rapid motion.

6.4 Determine the length of advance by the resistance and condition of the formation, but the length shall never exceed 5 to 10 diameters of the tube in sands and 10 to 15 diameters of the tube in clays.

NOTE 3—Weight of sample, laboratory handling capabilities, transportation problems, and commercial availability of tubes will generally limit maximum practical lengths to those shown in Table 1.

6.5 When the formation is too hard for push-type insertion, the tube may be driven or Practice D 3550 may be used. Other methods, as directed by the engineer or geologist, may be used. If driving methods are used, the data regarding weight and fall of the hammer and penetration ac[illegible] must be shown in the report. Additionally, that tube m[illegible] prominently labeled a "driven sample."

6.6 In no case shall a length of advance be greater than the sample-tube length minus an allowance for the sampler head and a minimum of 3 in. for sludge-end cuttings.

NOTE 4—The tube may be rotated to shear bottom of the sample after pressing is complete.

6.7 Withdraw the sampler from the formation as carefully as possible in order to minimize disturbance of the sample.

7. Preparation for Shipment

7.1 Upon removal of the tube, measure the length of sample in the tube. Remove the disturbed material in the upper end of the tube and measure the length again. Seal the upper end of the tube. Remove at least 1 in. of material from the lower end of the tube. Use this material for soil description in accordance with Practice D 2488. Measure the overall sample length. Seal the lower end of the tube. Alternatively, after measurement, the tube may be sealed without removal of soil from the ends of the tube if so directed by the engineer or geologist.

NOTE 5—Field extrusion and packaging of extruded samples under the specific direction of a geotechnical engineer or geologist is permitted.

NOTE 6—Tubes sealed over the ends as opposed to those sealed with expanding packers should contain end padding in end voids in order to prevent drainage or movement of the sample within the tube.

7.2 Prepare and immediately affix labels or apply [illegible] ings as necessary to identify the sample. Assure th[illegible]

179

markings or labels are adequate to survive transportation and storage.

8. Report

8.1 The appropriate information is required as follows:

8.1.1 Name and location of the project,

8.1.2 Boring number and precise location on project,

8.1.3 Surface elevation or reference to a datum,

8.1.4 Date and time of boring—start and finish,

8.1.5 Depth to top of sample and number of sample,

8.1.6 Description of sampler: size, type of metal, type of coating,

8.1.7 Method of sampler insertion: push or drive,

8.1.8 Method of drilling, size of hole, casing, and drilling fluid used,

8.1.9 Depth to groundwater level: date and time measured,

8.1.10 Any possible current or tidal effect on water level,

8.1.11 Soil description in accordance with Practice D 2488,

8.1.12 Length of sampler advance, and

8.1.13 Recovery: length of sample obtained.

9. Precision and Bias

9.1 This practice does not produce numerical data; therefore, a precision and bias statement is not applicable.

The American Society for Testing and Materials takes no position respecting the validity of any patent rights asserted in connection with any item mentioned in this standard. Users of this standard are expressly advised that determination of the validity of any such patent rights, and the risk of infringement of such rights, are entirely their own responsibility.

This standard is subject to revision at any time by the responsible technical committee and must be reviewed every five years and if not revised, either reapproved or withdrawn. Your comments are invited either for revision of this standard or for additional standards and should be addressed to ASTM Headquarters. Your comments will receive careful consideration at a meeting of the responsible technical committee, which you may attend. If you feel that your comments have not received a fair hearing you should make your views known to the ASTM Committee on Standards, 1916 Race St., Philadelphia, PA 19103. known to the ASTM Committee on Standards, 1916 Race St., Philadelphia, PA 19103.

Designation: D 2166 – 91

Standard Test Method for Unconfined Compressive Strength of Cohesive Soil[1]

This standard is issued under the fixed designation D 2166; the number immediately following the designation indicates the year of original adoption or, in the case of revision, the year of last revision. A number in parentheses indicates the year of last reapproval. A superscript epsilon (ε) indicates an editorial change since the last revision or reapproval.

1. Scope

1.1 This test method covers the determination of the unconfined compressive strength of cohesive soil in the undisturbed, remolded, or compacted condition, using strain-controlled application of the axial load.

1.2 This test method provides an approximate value of the strength of cohesive soils in terms of total stresses.

1.3 This test method is applicable only to cohesive materials which will not expel bleed water (water expelled from the soil due to deformation or compaction) during the loading portion of the test and which will retain intrinsic strength after removal of confining pressures, such as clays or cemented soils. Dry and crumbly soils, fissured or varved materials, silts, peats, and sands cannot be tested with this method to obtain valid unconfined compression strength values.

NOTE 1—The determination of the unconsolidated, undrained strength of cohesive soils with lateral confinement is covered by Test Method D 2850.

1.4 This test method is not a substitute for Test Method D 2850.

1.5 The values stated in SI units are to be regarded as the standard. The values stated in inch-pound units are approximate.

1.6 *This standard does not purport to address all of the safety problems, if any, associated with its use. It is the responsibility of the user of this standard to establish appropriate safety and health practices and determine the applicability of regulatory limitations prior to use.*

2. Referenced Documents

2.1 *ASTM Standards:*

D 422 Method for Particle-Size Analysis of Soils[2]

D 653 Terminology Relating to Soil, Rock, and Contained Fluids[2]

D 854 Test Method for Specific Gravity of Soils[2]

D 1587 Practice for Thin-Walled Tube Sampling of Soils[2]

D 2216 Test Method for Laboratory Determination of Water (Moisture) Content of Soil, Rock, and Soil-Aggregate Mixtures[2]

D 2487 Test Method for Classification of Soils for Engineering Purposes[2]

D 2488 Practice for Description and Identification of Soils (Visual-Manual Procedure)[2]

D 2850 Test Method for Unconsolidated, Undrained Compressive Strength of Cohesive Soils in Triaxial Compression[2]

D 4220 Practices for Preserving and Transporting Soil Samples[2]

D 4318 Test Method for Liquid Limit, Plastic Limit, and Plasticity Index of Soils[2]

3. Terminology

3.1 Definitions—Refer to Terminology D 653 for standard definitions of terms.

3.2 *Descriptions of Terms Specific to this Standard:*

3.2.1 *unconfined compressive strength (q_u)*—the compressive stress at which an unconfined cylindrical specimen of soil will fail in a simple compression test. In this test method, unconfined compressive strength is taken as the maximum load attained per unit area or the load per unit area at 15 % axial strain, whichever is secured first during the performance of a test.

3.2.2 *shear strength (s_u)*—for unconfined compressive strength test specimens, the shear strength is calculated to be ½ of the compressive stress at failure, as defined in 3.2.1.

4. Significance and Use

4.1 The primary purpose of the unconfined compression test is to quickly obtain the approximate compressive strength of soils that possess sufficient cohesion to permit testing in the unconfined state.

4.2 Samples of soils having slickensided or fissured structure, samples of some types of loess, very soft clays, dry and crumbly soils and varved materials, or samples containing significant portions of silt or sand, or both (all of which usually exhibit cohesive properties), frequently display higher shear strengths when tested in accordance with Test Method D 2850. Also, unsaturated soils will usually exhibit different shear strengths when tested in accordance with Test Method D 2850.

4.3 If both an undisturbed and a remolded test are performed on the same sample, the sensitivity of the material can be determined. This method of determining sensitivity is suitable only for soils that can retain a stable specimen shape in the remolded state.

NOTE 2—For soils that will not retain a stable shape, a vane shear test or Test Method D 2850 can be used to determine sensitivity.

[1] This test method is under the jurisdiction of ASTM Committee D-18 on Soil and Rock and is the direct responsibility of Subcommittee D18.05 on Structural Properties of Soils.

Current edition approved August 15, 1991. Published October 1991. Originally published as D 2166 – 63T. Last previous edition D 2166 – 85[ε1]

[2] *Annual Book of ASTM Standards*, Vol 04.08.

5. Apparatus

5.1 *Compression Device*—The compression device may be a platform weighing scale equipped with a screw-jack-activated load yoke, a hydraulic loading device, or any other compression device with sufficient capacity and control to provide the rate of loading prescribed in 7.1. For soil with an unconfined compressive strength of less than 100 kPa (1.0 ton/ft^2) the compression device shall be capable of measuring the compressive stress to within 1 kPa (0.01 ton/ft^2). For soil with an unconfined compressive strength of 100 kPa (1.0 ton/ft^2) or greater, the compression device shall be capable of measuring the compressive stress to the nearest 5 kPa (0.05 ton/ft^2).

5.2 *Sample Extruder*, capable of extruding the soil core from the sampling tube in the same direction of travel in which the sample entered the tube, at a uniform rate, and with negligible disturbance of the sample. Conditions at the time of sample removal may dictate the direction of removal, but the principal concern is to keep the degree of disturbance negligible.

5.3 *Deformation Indicator*—The deformation indicator shall be a dial indicator graduated to 0.03 mm (0.001 in.) or better and having a travel range of at least 20 % of the length of the test specimen, or some other measuring device, such as an electronic deformation measuring device, meeting these requirements.

5.4 *Dial Comparator*, or other suitable device, for measuring the physical dimensions of the specimen to within 0.1 % of the measured dimension.

NOTE 3—Vernier calipers are not recommended for soft specimens, which will deform as the calipers are set on the specimen.

5.5 *Timer*—A timing device indicating the elapsed testing time to the nearest second shall be used for establishing the rate of strain application prescribed in 7.1.

5.6 *Balance*—The balance used to weigh specimens shall determine the mass of the specimen to within 0.1 % of its total mass.

5.7 *Equipment*, as specified in Test Method D 2216.

5.8 *Miscellaneous Apparatus*, including specimen trimming and carving tools, remolding apparatus, water content cans, and data sheets, as required.

6. Preparation of Test Specimens

6.1 *Specimen Size*—Specimens shall have a minimum diameter of 30 mm (1.3 in.) and the largest particle contained within the test specimen shall be smaller than one tenth of the specimen diameter. For specimens having a diameter of 72 mm (2.8 in.) or larger, the largest particle size shall be smaller than one sixth of the specimen diameter. If, after completion of a test on an undisturbed specimen, it is found, based on visual observation, that larger particles than permitted are present, indicate this information in the remarks section of the report of test data (Note 4). The height-to-diameter ratio shall be between 2 and 2.5. Determine the average height and diameter of the test specimen using the apparatus specified in 5.4. Take a minimum of three height measurements (120° apart), and at least three diameter measurements at the quarter points of the height.

NOTE 4—If large soil particles are found in the sample after testing, a particle-size analysis performed in accordance with Method D 422 may be performed to confirm the visual observation and the results provided with the test report.

6.2 *Undisturbed Specimens*—Prepare undisturbed specimens from large undisturbed samples or from samples secured in accordance with Practice D 1587 and preserved and transported in accordance with the practices for Grade C samples in Practices D 4220. Tube specimens may be tested without trimming except for the squaring of ends, if conditions of the sample justify this procedure. Handle specimens carefully to prevent disturbance, changes in cross section, or loss of water content. If compression or any type of noticeable disturbance would be caused by the extrusion device, split the sample tube lengthwise or cut it off in small sections to facilitate removal of the specimen without disturbance. Prepare carved specimens without disturbance, and whenever possible, in a humidity-controlled room. Make every effort to prevent any change in water content of the soil. Specimens shall be of uniform circular cross section with ends perpendicular to the longitudinal axis of the specimen. When carving or trimming, remove any small pebbles or shells encountered. Carefully fill voids on the surface of the specimen with remolded soil obtained from the trimmings. When pebbles or crumbling result in excessive irregularity at the ends, cap the specimen with a minimum thickness of plaster of paris, hydrostone, or similar material. When sample condition permits, a vertical lathe that will accommodate the total sample may be used as an aid in carving the specimen to the required diameter. Where prevention of the development of appreciable capillary forces is deemed important, seal the specimen with a rubber membrane, thin plastic coatings, or with a coating of grease or sprayed plastic immediately after preparation and during the entire testing cycle. Determine the mass and dimensions of the test specimen. If the specimen is to be capped, its mass and dimensions should be determined before capping. If the entire test specimen is not to be used for determination of water content, secure a representative sample of cuttings for this purpose, placing them immediately in a covered container. The water content determination shall be performed in accordance with Test Method D 2216.

6.3 *Remolded Specimens*—Specimens may be prepared either from a failed undisturbed specimen or from a disturbed sample, providing it is representative of the failed undisturbed specimen. In the case of failed undisturbed specimens, wrap the material in a thin rubber membrane and work the material thoroughly with the fingers to assure complete remolding. Avoid entrapping air in the specimen. Exercise care to obtain a uniform density, to remold to the same void ratio as the undisturbed specimen, and to preserve the natural water content of the soil. Form the disturbed material into a mold of circular cross section having dimensions meeting the requirements of 6.1. After removal from the mold, determine the mass and dimensions of the test specimens.

6.4 *Compacted Specimens*—Specimens shall be prepared to the predetermined water content and density prescribed by the individual assigning the test (Note 5). After a specimen is formed, trim the ends perpendicular to the longitudinal axis, remove from the mold, and determine mass and dimensions of the test specimen.

182

NOTE 5—Experience indicates that it is difficult to compact, handle, and obtain valid results with specimens that have a degree of saturation that is greater than 90 %.

7. Procedure

7.1 Place the specimen in the loading device so that it is centered on the bottom platen. Adjust the loading device carefully so that the upper platen just makes contact with the specimen. Zero the deformation indicator. Apply the load so as to produce an axial strain at a rate of ½ to 2 %/min. Record load, deformation, and time values at sufficient intervals to define the shape of the stress-strain curve (usually 10 to 15 points are sufficient). The rate of strain should be chosen so that the time to failure does not exceed about 15 min (Note 6). Continue loading until the load values decrease with increasing strain, or until 15 % strain is reached. The rate of strain used for testing sealed specimens may be decreased if deemed desirable for better test results. Indicate the rate of strain in the report of the test data, as required in 9.1.7. Determine the water content of the test specimen using the entire specimen, unless representative cuttings are obtained for this purpose, as in the case of undisturbed specimens. Indicate on the test report whether the water content sample was obtained before or after the shear test, as required in 9.1.2.

NOTE 6—Softer materials that will exhibit larger deformation at failure should be tested at a higher rate of strain. Conversely, stiff or brittle materials that will exhibit small deformations at failure should be tested at a lower rate of strain.

7.2 Make a sketch, or take a photo, of the test specimen at failure showing the slope angle of the failure surface if the angle is measurable.

7.3 A copy of a sample data sheet is included in Appendix X1. Any data sheet can be used, provided the form contains all the required data.

8. Calculation

8.1 Calculate the axial strain, ϵ_1, to the nearest 0.1 %, for a given applied load, as follows:

$$\epsilon_1 = \Delta L / L_0$$

where:

ΔL = length change of specimen as read from deformation indicator, mm (in.), and

L_0 = initial length of test specimen, mm (in.).

8.2 Calculate the average cross-sectional area, A, for a given applied load, as follows:

$$A = A_0/(1 - \epsilon_1)$$

where:

A_0 = initial average cross-sectional area of the specimen, mm² (in.²), and

ϵ_1 = axial strain for the given load, %.

8.3 Calculate the compressive stress, σ_c, to three significant figures, or nearest 1 kPa (0.01 ton/ft²), for a given applied load, as follows:

$$\sigma_c = (P/A)$$

where:

P = given applied load, kPa (ton/ft²),

A = corresponding average cross-sectional area mm² (in.²).

8.4 *Graph*—If desired, a graph showing the relationship between compressive stress (ordinate) and axial strain (abscissa) may be plotted. Select the maximum value of compressive stress, or the compressive stress at 15 % axial strain, whichever is secured first, and report as the unconfined compressive strength, q_u. Whenever it is considered necessary for proper interpretation, include the graph of the stress-strain data as part of the data reported.

8.5 If the unconfined compressive strength is determined, the sensitivity, S_T, is calculated as follows:

$$S_T = \frac{q_u \text{ (undisturbed specimen)}}{q_u \text{ (remolded specimen)}}$$

9. Report

9.1 The report should include the following:

9.1.1 Identification and visual description of the specimen, including soil classification, symbol, and whether the specimen is undisturbed, remolded, compacted, etc. Also include specimen identifying information, such as project, location, boring number, sample number, depth, etc. Visual descriptions shall be made in accordance with Practice D 2488,

9.1.2 Initial dry density and water content (specify if the water content specimen was obtained before or after shear, and whether from cuttings or the entire specimen),

9.1.3 Degree of saturation (Note 7), if computed,

NOTE 7—The specific gravity determined in accordance with Test Method D 854 is required for calculation of the degree of saturation.

9.1.4 Unconfined compressive strength and shear strength,

9.1.5 Average height and diameter of specimen,

9.1.6 Height-to-diameter ratio,

9.1.7 Average rate of strain to failure, %,

9.1.8 Strain at failure, %,

9.1.9 Liquid and plastic limits, if determined, in accordance with Test Method D 4318,

9.1.10 Failure sketch or photo,

9.1.11 Stress-strain graph, if prepared,

9.1.12 Sensitivity, if determined,

9.1.13 Particle size analysis, if determined, in accordance with Method D 422, and

9.1.14 *Remarks*—Note any unusual conditions or other data that would be considered necessary to properly interpret the results obtained, for example, slickensides, stratification, shells, pebbles, roots, or brittleness, the type of failure (that is, bulge, diagonal shear, etc.).

10. Precision and Bias

10.1 *Precision*—Data are being evaluated to determine the precision of this test method. In addition, Subcommittee D18.05 is seeking pertinent data from users of the test method.

10.2 *Bias*—There is no accepted reference value for this test method, therefore, bias cannot be determined.

11. Keywords

11.1 Cohesive soil; sensitivity; strain-controlled loading; strength; stress-strain relationships; unconfined compression

APPENDIX

(Nonmandatory Information)

X1. Example Data Sheet

UNCONFINED COMPRESSION TEST—UI

Name _____ Date _____ Job No. _____

Location _____

Boring No. _____ Sample No. _____ Depth/Elev. _____

Description of Sample _____

Proving Ring No. _____ Apparatus No. _____

Water Content Determination

Tare No. _____

Wt. Specimen Wet + Tare

Wt. Specimen Dry + Tare

Wt. Water _____

Wt. Tare _____

Wt. Specimen Wet _____

Wt. Specimen Dry _____

Water Content in % Dry Wt.

at 105°C _____ %

Wet Density _____

Dry Density _____

Unconfined Compressive Strength

Initial Diameter D_o _____

Initial Area A_o _____

Initial Height L_o _____

Initial Volume V_o _____

Specific Gravity _____

$$\text{Stress} = \frac{\text{Load}}{\text{Corr. Area}}$$

Test Data

Unit Strain $\frac{\Delta L}{L_o}$

$\frac{L}{D}$ = _____

$$\text{Corr. Area} = \frac{A_o}{1 - \text{Unit Strain}}$$

Elapsed Time-min	Load Dial	Axial Load	Strain Dial	Total Strain	Unit Strain	Corrected Area	Stress	

Type of Sample _____

Attach a photo or sketch of the specimen after failure to this form

Strain Rate _____ %/Min

Remarks _____

184

The American Society for Testing and Materials takes no position respecting the validity of any patent rights asserted in connection with any item mentioned in this standard. Users of this standard are expressly advised that determination of the validity of any such patent rights, and the risk of infringement of such rights, are entirely their own responsibility.

This standard is subject to revision at any time by the responsible technical committee and must be reviewed every five years and if not revised, either reapproved or withdrawn. Your comments are invited either for revision of this standard or for additional standards and should be addressed to ASTM Headquarters. Your comments will receive careful consideration at a meeting of the responsible technical committee, which you may attend. If you feel that your comments have not received a fair hearing you should make your views known to the ASTM Committee on Standards, 1916 Race St., Philadelphia, PA 19103.

Designation: D 2216 - 92

Standard Test Method for Laboratory Determination of Water (Moisture) Content of Soil and Rock[1]

This standard is issued under the fixed designation D 2216; the number immediately following the designation indicates the year of original adoption or, in the case of revision, the year of last revision. A number in parentheses indicates the year of last reapproval. A superscript epsilon (ε) indicates an editorial change since the last revision or reapproval.

1. Scope

1.1 This test method covers the laboratory determination of the water (moisture) content of soil, rock, and similar materials by mass. For simplicity, the word "material" hereinafter also refers to either soil or rock, whichever is most applicable.

1.2 The water content of a material is defined by this standard as the ratio, expressed as a percentage, of the mass of "pore" or "free" water in a given mass of material to the mass of the solid material.

1.3 The term "solid particles" as used in geotechnical engineering is typically assumed to mean naturally occurring mineral particles of soil and rock that are not readily soluble in water. Therefore, the water content of materials containing extraneous matter (such as cement, and the like) may require special treatment or a qualified definition of water content. In addition, some organic materials may be decomposed by oven drying at the standard drying temperature for this method (110°C). Materials containing gypsum (calcium sulfate dihydrate or other compounds having significant amounts of hydrated water) may present a special problem as this material slowly dehydrates at the standard drying temperature (110°C) and at very low relative humidities, forming a compound (calcium sulfate hemihydrate) which is not normally present in natural materials except in some desert soils. In order to reduce the degree of dehydration of gypsum in those materials containing gypsum, or to reduce decomposition in highly organic soils, it may be desirable to dry these materials at 60°C or in a desiccator at room temperature. Thus, when a drying temperature is used which is different from the standard drying temperature as defined by this test method, the resulting water content may be different from standard water content determined at the standard drying temperature.

NOTE 1—Test Methods D 2974 provides an alternate procedure for determining water content of peat materials.

1.4 Materials containing water with substantial amounts of soluble solids (such as salt in the case of marine sediments) when tested by this method will give a mass of solids which includes the previously soluble solids. These materials require special treatment to remove or account for the presence of precipitated solids in the dry mass of the specimen, or a qualified definition of water content must be used.

1.5 This test method requires several hours for proper drying of the water content specimen. Test Method D 4643 provides for drying of the test specimen in a microwave oven which is a shorter process.

1.6 This standard requires the drying of material in an oven at high temperatures. If the material being dried is contaminated with certain chemicals, health and safety hazards can exist. Therefore, this standard should not be used in determining the water content of contaminated soils unless adequate health and safety precautions are taken.

1.7 *This standard does not purport to address all of the safety problems, if any, associated with its use. It is the responsibility of the user of this standard to establish appropriate safety and health practices and determine the applicability of regulatory limitations prior to use.*

2. Referenced Documents

2.1 *ASTM Standards:*

D 653 Terminology Relating to Soil, Rock, and Contained Fluids[2]

D 2974 Test Methods for Moisture, Ash, and Organic Matter of Peat and Other Organic Soils[2]

D 4220 Practice for Preserving and Transporting Soil Samples[2]

D 4318 Test Method for Liquid Limit, Plastic Limit, and Plasticity Index of Soils[2]

D 4643 Test Method for Determination of Water (Moisture) Content of Soil by the Microwave Oven Method[2]

D 4753 Specification for Evaluating, Selecting, and Specifying Balances and Scales for Use in Soil and Rock Testing[2]

E 145 Specification for Gravity-Convection And Forced-Ventilation Ovens[3]

3. Terminology

3.1 Refer to Terminology D 653 for standard definitions of terms.

3.2 *Description of Term Specific to This Standard:*

3.2.1 *water content* (of a material)—the ratio of the mass of water contained in the pore spaces of soil or rock material, to the solid mass of particles in that material, expressed as a percentage.

[1] This method is under the jurisdiction of ASTM Committee D-18 on Soil and Rock and is the direct responsibility of Subcommittee D18.03 on Texture, Plasticity and Density Characteristics of Soils.

Current edition approved June 15, 1992. Published August 1992. Originally published as D 2216 - 63 T. Last previous edition D 2216 - 90ε[1].

[2] *Annual Book of ASTM Standards*, Vol 04.08.

[3] *Annual Book of ASTM Standards*, Vol 14.02.

186

4. Summary of Test Method

4.1 A test specimen is dried in an oven to a constant mass. The loss of mass due to drying is considered to be water. The water content is calculated using the mass of water and the mass of the dry specimen.

5. Significance and Use

5.1 For many materials, the water content is one of the most significant index properties used in establishing a correlation between soil behavior and its properties.

5.2 The water content of a material is used in expressing the phase relationships of air, water, and solids in a given volume of material.

5.3 In fine-grained (cohesive) soils, the consistency of a given soil type depends on its water content. The water content of a soil, along with its liquid and plastic limits as determined by Test Method D 4318, is used to express its relative consistency or liquidity index.

6. Apparatus

6.1 *Drying Oven*, thermostatically-controlled, preferably of the forced-draft type, meeting the requirements of Specification E 145 and capable of maintaining a uniform temperature of 110 ± 5°C throughout the drying chamber.

6.2 *Balances*—All balances must meet the requirements of Specification D 4753 and this Section. A Class GP1 balance of 0.01g readability is required for specimens having a mass of up to 200 g (excluding mass of specimen container) and a Class GP2 balance of 0.1g readability is required for specimens having a mass over 200 g.

6.3 *Specimen Containers*—Suitable containers made of material resistant to corrosion and change in mass upon repeated heating, cooling, exposure to materials of varying pH, and cleaning. Containers with close-fitting lids shall be used for testing specimens having a mass of less than about 200 g; while for specimens having a mass greater than about 200 g, containers without lids may be used. One container is needed for each water content determination.

NOTE 2—The purpose of close-fitting lids is to prevent loss of moisture from specimens before initial mass determination and to prevent absorption of moisture from the atmosphere following drying and before final mass determination.

6.4 *Desiccator*—A desiccator cabinet or large desiccator jar of suitable size containing silica gel or anhydrous calcium phosphate. It is preferable to use a desiccant which changes color to indicate it needs reconstitution. See Section 10.5.

NOTE 3—Anhydrous calcium sulfate is sold under the trade name Drierite.

6.5 *Container Handling Apparatus*, gloves, tongs, or suitable holder for moving and handling hot containers after drying.

6.6 *Miscellaneous*, knives, spatulas, scoops, quartering cloth, sample splitters, etc, as required.

7. Samples

7.1 Samples shall be preserved and transported in accordance with Practice 4220 Groups B, C, or D soils. Keep the samples that are stored prior to testing in noncorrodible airtight containers at a temperature between approximately 3 and 30°C and in an area that prevents direct contact with sunlight. Disturbed samples in jars or other containers shall be stored in such a way as to prevent or minimize mc condensation on the insides of the containers.

7.2 The water content determination should be as soon as practicable after sampling, especially if potentially corrodible containers (such as thin-walled steel tubes, paint cans, etc.) or plastic sample bags are used.

8. Test Specimen

8.1 For water contents being determined in conjunction with another ASTM method, the specimen mass requirement stated in that method shall be used if one is provided. If no minimum specimen mass is provided in that method then the values given before shall apply.

8.2 The minimum mass of moist material selected to be representative of the total sample, if the total sample is not tested by this method, shall be in accordance with the following:

Maximum particle size (100 % passing)	Standard Sieve Size	Recommended minimum mass of moist test specimen for water content reported to ±0.1 %	Recommended minimum mass of moist test specimen for water content reported to ±1 %
2 mm or less	No. 10	20 g	20 g*
4.75 mm	No. 4	100 g	20 g*
9.5 mm	⅜-in.	500 g	50 g
19.0 mm	¾-in.	2.5 kg	250 g
37.5 mm	1½ in.	10 kg	1 kg
75.0 mm	3-in.	50 kg	5 kg

NOTE—*To be representative not less than 20 g shall be us

8.2.1 If the total sample is used it does not have the minimum mass requirements provided in the table above. The report shall indicate that the entire sample was used.

8.3 Using a test specimen smaller than the minimum indicated in 8.2 requires discretion, though it may be adequate for the purposes of the test. Any specimen used not meeting these requirements shall be noted in the report of results.

8.4 When working with a small (less than 200g) specimen containing a relatively large gravel particle, it is appropriate not to include this particle in the test specimen. However, any discarded material shall be described and noted in the report of the results.

8.5 For those samples consisting entirely of intact rock, the minimum specimen mass shall be 500 g. Representative portions of the sample may be broken into smaller particles, depending on the sample's size, the container and balance being used and to facilitate drying to constant mass, see Section 10.4.

9. Test Specimen Selection

9.1 When the test specimen is a portion of a larger amount of material, the specimen must be selected to be representative of the water condition of the entire amount of material. The manner in which the test specimen is selected depends on the purpose and application of the test, typ material being tested, the water condition, and the sample (from another test, bag, block, and the likes

9.2 For disturbed samples such as trimmings, bag samples, and the like, obtain the test specimen by one of the

187

following methods (listed in order of preference):

9.2.1 If the material is such that it can be manipulated and handled without significant moisture loss, the material should be mixed and then reduced to the required size by quartering or splitting.

9.2.2 If the material is such that it cannot be thoroughly mixed and/or split, form a stockpile of the material, mixing as much as possible. Take at least five portions of material at random locations using a sampling tube, shovel, scoop, trowel, or similar device appropriate to the maximum particle size present in the material. Combine all the portions for the test specimen.

9.2.3 If the material or conditions are such that a stockpile cannot be formed, take as many portions of the material as possible at random locations that will best represent the moisture condition. Combine all the portions for the test specimen.

9.3 Intact samples such as block, tube, split barrel, and the like, obtain the test specimen by one of the following methods depending on the purpose and potential use of the sample.

9.3.1 Carefully trim at least 3 mm of material from the outer surface of the sample to see if material is layered and to remove material that is drier or wetter than the main portion of the sample. Then carefully trim at least 5 mm, or a thickness equal to the maximum particle size present, from the entire exposed surface or from the interval being tested.

9.3.2 Slice the sample in half. If material is layered see Section 9.3.3. Then carefully trim at least 5 mm, or a thickness equal to the maximum particle size present, from the exposed surface of one half, or from the interval being tested. Avoid any material on the edges that may be wetter or drier than the main portion of the sample.

NOTE 4—Migration of moisture in some cohesionless soils may require that the full section be sampled.

9.3.3 If a layered material (or more than one material type is encountered), select an average specimen, or individual specimens, or both. Specimens must be properly identified as to location, or what they represent, and appropriate remarks entered on data sheets.

10. Procedure

10.1 Determine and record the mass of the clean and dry specimen container (and its lid, if used).

10.2 Select representative test specimens in accordance with Section 9.

10.3 Place the moist test specimen in the container and, if used, set the lid securely in position. Determine the mass of the container and moist material using a balance (See 6.2) selected on the basis of the specimen mass. Record this value.

NOTE 5—To prevent mixing of specimens and yielding of incorrect results, all containers, and lids if used, should be numbered and the container numbers shall be recorded on the laboratory data sheets. The lid numbers should match the container numbers to eliminate confusion.

NOTE 6—To assist in the oven-drying of large test specimens, they should be placed in containers having a large surface area (such as pans) and the material broken up into smaller aggregations.

10.4 Remove the lid (if used) and place the container with moist material in the drying oven. Dry the material to a constant mass. Maintain the drying oven at 110 ± 5°C unless otherwise specified (see 1.3). The time required to obtain constant mass will vary depending on the type of material, size of specimen, oven type and capacity, and other factors. The influence of these factors generally can be established by good judgment, and experience with the materials being tested and the apparatus being used.

NOTE 7—In most cases, drying a test specimen overnight (about 12 to 16 h) is sufficient. In cases where there is doubt concerning the adequacy of drying, drying should be continued until the change in mass after two successive periods (greater than 1 h) of drying is an insignificant amount (less than about 0.1 %). Specimens of sand may often be dried to constant mass in a period of about 4 h, when a forced-draft oven is used.

NOTE 8—Since some dry materials may absorb moisture from moist specimens, dried specimens should be removed before placing moist specimens in the same oven. However, this would not be applicable if the previously dried specimens will remain in the drying oven for an additional time period of about 16 h.

10.5 After the material has dried to constant mass remove the container from the oven (and replace the lid if used). Allow the material and container to cool to room temperature or until the container can be handled comfortably with bare hands and the operation of the balance will not be affected by convection currents and/or its being heated. Determine the mass of the container and oven-dried material using the same balance as used in 10.3. Record this value. Tight fitting lids shall be used if it appears that the specimen is absorbing moisture from the air prior to determination of its dry mass.

NOTE 9—Cooling in a desiccator is acceptable in place of tight fitting lids since it greatly reduces absorption of moisture from the atmosphere during cooling especially for containers without tight fitting lids.

11. Calculation

11.1 Calculate the water content of the material as follows:

$$w = [(M_{cws} - M_{cs})/(M_{cs} - M_c)] \times 100 = \frac{M_w}{M_s} \times 100$$

where:

w = water content, %,
M_{cws} = mass of container and wet specimen, g,
M_{cs} = mass of container and oven dry specimen, g,
M_c = mass of container, g,
M_w = mass of water ($M_w = M_{cws} - M_{cds}$), g, and
M_s = mass of solid particles ($M_s = M_{cds} - M_c$), g.

12. Report

12.1 The report (data sheet) shall include the following:

12.1.1 Identification of the sample (material) being tested, such as boring number, sample number, test number, container number etc.

12.1.2 Water content of the specimen to the nearest 1 % or 0.1 %, as appropriate based on the minimum sample used. If this method is used in concert with another method, the water content of the specimen should be reported to the value required by the test method for which the water content is being determined.

12.1.3 Indicate if test specimen had a mass less than the minimum indicated in 8.2.

12.1.4 Indicate if test specimen contained more than one material type (layered, etc.).

12.1.5 Indicate the method of drying if different from oven-drying at 110 ± 5°C.

12.1.6 Indicate if any material (size and amount) was excluded from the test specimen.

13. Precision and Bias

13.1 *Statement on Bias*—There is no accepted reference value for this test method; therefore, bias cannot be determined.

13.2 *Statements on Precision:*

13.2.1 *Single-Operator Precision*—The single-operator coefficient of variation has been found to be 2.7 percent. Therefore, results of two properly conducted tests by the same operator with the same equipment should not be considered suspect unless they differ by more than 7.[illegible] percent of their mean.

13.2.2 *Multilaboratory Precision*—The multilaborato[illegible] coefficient of variation has been found to be 5.0 percent. Therefore, results of two properly conducted tests by different operators using different equipment should not be considered suspect unless they differ by more than 14.0 percent of their mean.

14. Keywords

14.1 consistency; index property; laboratory; moisture analysis; moisture content; soil aggregate; water content

The American Society for Testing and Materials takes no position respecting the validity of any patent rights asserted in connection with any item mentioned in this standard. Users of this standard are expressly advised that determination of the validity of any such patent rights, and the risk of infringement of such rights, are entirely their own responsibility.

This standard is subject to revision at any time by the responsible technical committee and must be reviewed every five years and if not revised, either reapproved or withdrawn. Your comments are invited either for revision of this standard or for additional standards and should be addressed to ASTM Headquarters. Your comments will receive careful consideration at a meeting of the responsible technical committee, which you may attend. If you feel that your comments have not received a fair hearing you should make your views known to the ASTM Committee on Standards, 1916 Race St., Philadelphia, PA 19103.

189

Designation: D 2217 – 85

Standard Practice for Wet Preparation of Soil Samples for Particle-Size Analysis and Determination of Soil Constants[1]

This standard is issued under the fixed designation D 2217; the number immediately following the designation indicates the year of original adoption or, in the case of revision, the year of last revision. A number in parentheses indicates the year of last reapproval. A superscript epsilon (ε) indicates an editorial change since the last revision or reapproval.

This practice has been approved for use by agencies of the Department of Defense and for listing in the DoD Index of Specifications and Standards.

1. Scope

1.1 This practice covers the wet preparation of soil samples as received from the field for particle-size analysis and determination of soil constants.

1.2 Procedure A provides for drying the field sample at a temperature not exceeding 140°F (60°C), making a wet separation on the No. 10 (2.00-mm) sieve, or No. 40 (425-μm) sieve, or both, as needed, and finally drying at a temperature not exceeding 140°F. Procedure B provides that the sample shall be kept at a moisture content equal to or greater than the natural water content. The procedure to be used should be indicated in the specification for the material being tested. If no procedure is specified, the provisions of Procedure B shall govern.

1.3 *This standard may involve hazardous materials, operations, and equipment. This standard does not purport to address all of the safety problems associated with its use. It is the responsibility of whoever uses this standard to consult and establish appropriate safety and health practices and determine the applicability of regulatory limitations prior to use.*

2. Referenced Documents

2.1 *ASTM Standards:*

D 421 Practice for Dry Preparation of Soil Samples for Particle-Size Analysis and Determination of Soil Constants[2]

D 422 Method for Particle-Size Analysis of Soils[2]

E 11 Specification for Wire-Cloth Sieves for Testing Purposes[3]

3. Significance and Use

3.1 Procedure A is used to prepare soil samples for plasticity tests and particle-size analysis when the coarse-grained particles of a sample are soft and pulverize readily, as in Practice D 421, or when the fine particles are very cohesive and tend to resist removal from the coarse particles.

3.2 Some soils never dry out in nature and may change their characteristics greatly when dried. If the true natural gradation and plasticity characteristics of such soils are desired, these soils should be shipped to the laboratory in sealed containers and processed in accordance with Procedure B of this practice.

3.3 Liquid limit and plasticity index values derived from samples containing their natural moisture are usually, but not always, equal to or higher than values derived from similar samples of the dried soil. In the case of fine-grained organic soil, there is a radical drop in plasticity due to oven drying.

4. Apparatus

4.1 *Balance*, sensitive to 0.1 g.

4.2 *Mortar and Rubber-Covered Pestle*, suitable for breaking up the aggregations of soil particles.

4.3 *Sieves*, No. 10 (2.00-mm) and No. 40 (425-μm), of square mesh woven-wire cloth, conforming to Specification E 11.

4.4 *Sampler*—A riffle sampler or sample splitter for quartering the samples.

4.5 *Drying Apparatus*—Thermostatically controlled drying oven for use at 140°F (60°C) or below and at 230°F (110°C), infrared lamps; air drier; or other suitable device for drying samples.

4.6 *Filter Funnels or Candles*—Büchner funnels 10 in. (254 mm) in diameter and filter paper or filter candles.

4.7 *Miscellaneous Equipment*—Pans 12 in. (304.8 mm) in diameter and 3 in. (76.2 mm) in depth; a suitable container that will prevent loss of moisture during storage of the moist test sample prepared in Procedure B.

PROCEDURE A

5. Sampling

5.1 Dry the soil sample as received from the field, using one of the following methods: (*1*) in air at room temperature, (*2*) in a drying oven at a temperature not exceeding 140°F (60°C), or (*3*) using any warming device that will not raise the temperature of the sample above 140°F. Break up thoroughly any aggregations of particles using the mortar and rubber-covered pestle or other suitable device (Note 1). Select a representative portion by the method of quartering or by use of the sampler. This portion must be sufficient to provide samples for particle-size analyses of material retained on and passing the No. 10 (2.00-mm) sieve, and to provide an adequate amount of material passing the No. 40 (425-μm) sieve for the tests to determine soil constants. The amounts of material required to perform the individual tests are as follows:

[1] This practice is under the jurisdiction of ASTM Committee D-18 on Soil and Rock and is the direct responsibility of Subcommittee D18.03 on Texture, Plasticity, and Density Characteristics of Soils.

Current edition approved July 26, 1985. Published September 1985. Originally published as D 2217 – 63 T. Last previous edition D 2217 – 66 (1978)[ε1].

[2] *Annual Book of ASTM Standards*, Vol 04.08.

[3] *Annual Book of ASTM Standards*, Vol 14.02.

190

Particle-Size Analysis of Material Retained on No. 10 (2.00-mm) Sieve:	
Gravelly soils, g	4 000 to 10 000
Sandy soils, g	1 500
Silty or clayey soils, g	400
Particle-Size Analysis of Material Passing No. 10 (2.00-mm) Sieve:	
Sandy soils, g	115
Silty or clayey soils, g	65
Tests for Determination of Soil Constants:	
Liquid limit, g	100
Plastic limit, g	15
Centrifuge moisture equivalent, g	10
Shrinkage factors, g	30
Check tests, g	65

NOTE 1—When the sample contains particles of soft shale or sandstone or similar weak material, proper care must be exercised to avoid excessive reduction in the size of the particles.

6. Preparation of Test Samples

6.1 *For Particle-Size Analysis:*

6.1.1 Weigh the portion of the test sample selected for particle-size analysis and record as the weight of test sample uncorrected for hygroscopic moisture. Separate this material into two portions using the No. 10 (2.00-mm) sieve. Set aside the portion passing for later recombination with additional material washed from the portion retained on the No. 10 (2.00-mm) sieve.

6.1.2 Place the material retained on the No. 10 (2.00-mm) sieve in a pan, cover with water, and allow to soak until the particle aggregations become soft. After soaking, wash the material on a No. 10 (2.00-mm) sieve in the following manner: Place an empty No. 10 (2.00-mm) sieve on the bottom of a clean pan and pour the water from the soaked sample into the sieve. Add sufficient water to bring the level approximately ½ in. (12.7 mm) above the mesh of the sieve. Transfer the soaked material to the sieve in increments not exceeding 1 lb (0.45 kg), stirring each increment with the fingers while agitating the sieve up and down. Crumble or mash any lumps that have not slaked, using the thumb and fingers. Raise the sieve above the water in the pan and complete the washing operation using a small amount of clean water. Transfer the washed material on the sieve to a clean pan before placing another increment of soaked material on the sieve.

6.1.3 Dry the material retained on the No. 10 (2.00-mm) sieve at a temperature of 230 ± 9°F (110 ± 5°C), sieve on the No. 10 (2.00-mm) sieve, and add the material passing the sieve to similar material obtained in 6.1.1. Set aside the material retained on the sieve for use in the particle-size analysis.

6.1.4 Set aside the pan containing the washings for a period of several hours or until the water above the particles is clear. Decant, pipet, or siphon off as much of the clear water as possible (Note 2). Dry the soil remaining in the pan at a temperature not exceeding 140°F (60°C). Grind the dried soil in the mortar with the rubber-covered pestle or other suitable device, and combine with similar material obtained in 6.1.1.

6.1.5 Alternatively, after all the soaked material has been washed, remove most of the water by filtering the wash water on one or more Büchner funnels fitted with filter paper or by using filter candles. Remove the moist soil from the filter paper or filter candles, combine with any sediment remaining in the pan, and dry at a temperature not exceeding 140°F (60°C). Grind the dried soil in the mortar with a rubber-covered pestle or other suitable device and combine with similar material obtained in 6.1.1.

NOTE 2—In some instances, the wash water will not become clear in a reasonable length of time; in this case the entire volume must be evaporated.

6.2 *For Determination of Soil Constants*—Proceed in accordance with 6.1, substituting a No. 40 (425-µm) sieve for the No. 10 (2.00-mm) sieve.

NOTE 3—In some areas it is possible that the cations of salts present in the tap water may exchange with the natural cations in the soil and alter significantly the values of the soil constants should tap water be used in the soaking and washing operations. Unless it is known that such cations are not present in the tap water, distilled or demineralized water should be used. The soaking and washing operation will remove soluble salts contained in the soil. When soluble salts are present in the soil, the wash water should be saved and evaporated, and the salts returned to the soil sample.

7. Test Samples

7.1 Keeping each portion separate from the other portion, mix thoroughly the portions of the soil sample passing the No. 10 (2.00-mm) sieve and the No. 40 (425-µm) sieve. By the method of quartering or by the use of the sampler, select and weigh out test samples of the weights indicated in Section 5, as may be needed to make the required tests.

PROCEDURE B

8. Samples

8.1 Samples prepared in accordance with this procedure must be shipped from the field to the laboratory in sealed containers and must contain all their natural moisture. Samples obviously containing only particles passing the No. 10 (2.00-mm) sieve may be tested in the particle-size analysis without first washing on the No. 10 (2.00-mm) sieve. Samples obviously containing only particles passing the No. 40 (425-µm) sieve may be used in the tests to determine soil constants without first washing on the No. 40 (425-µm) sieve.

9. Preparation of Test Samples

9.1 *For Particle-Size Analysis:*

9.1.1 Select and weigh a representative portion of the moist sample estimated to contain 50 g of particles passing the No. 10 (2.00-mm) sieve for silty and clayey soil, or 100 g for sandy soil. For samples containing particles not passing the No. 10 (2.00-mm) sieve for which a particle-size analysis is required, select and weigh a representative sample estimated to contain the required amounts of particles both passing and not passing the No. 10 (2.00-mm) sieve. Determine the moisture content at 230 ± 9°F (110 ± 5°C) using an auxiliary sample, for use in Method D 422.

9.1.2 Soak the moist sample and wash on a No. 10 (2.00-mm) sieve as described in 6.1.2. After washing, dry the material retained on the No. 10 (2.00-mm) sieve in an oven at a temperature of 230 ± 9°F (110 ± 5°C), weigh, and retain for the particle-size analysis. If the volume of the wash water and soil is too large for use in the sedimentation procedure of the test for particle-size analysis, evaporate excess water by exposure to air at room temperature, by heating in an oven

191

temperature not exceeding 230°F (110°C), or by boiling. rdless of the method of evaporation used, the following cautions must be taken: (*1*) stir the slurry from time to ime to prevent a dry soil ring from forming on the walls of the evaporation vessel, and (*2*) return the temperature of the sample to room temperature before testing.

9.2 *For Determination of Soil Constants*—Select a representative portion of the moist sample estimated to contain sufficient particles passing the No. 40 (425-µm) sieve to make the required tests for determination of soil constants. Soak this selected portion of the moist sample and wash on the No. 40 (425-µm) sieve as described in 6.2 (Note 2). Reduce the moisture content of the material passing the No. 40 (425-µm) sieve until the mass reaches a putty-like consistency (such as 30 to 35 drops of the cup in the liquid limit test) but never below the natural moisture content. Reduction of moisture content may be accomplished as follows: by exposure to air at ordinary room temperature, by heating in an oven at a temperature not exceeding 230°F (110°C), by boiling, by filtering on a Büchner funnel, or by use of filter candles. During evaporation and cooling, stir the sample often enough to prevent overdrying of the fringes and soil pinnacles on the surface. Cool the heated samples to normal room temperature before testing. For soil samples containing soluble salts, use a method of water reduction that will not eliminate the soluble salts from the test sample. Protect the prepared sample in a suitable container from further drying until all required tests have been performed.

The American Society for Testing and Materials takes no position respecting the validity of any patent rights asserted in connection with any item mentioned in this standard. Users of this standard are expressly advised that determination of the validity of any such patent rights, and the risk of infringement of such rights, are entirely their own responsibility.

This standard is subject to revision at any time by the responsible technical committee and must be reviewed every five years and if not revised, either reapproved or withdrawn. Your comments are invited either for revision of this standard or for additional standards and should be addressed to ASTM Headquarters. Your comments will receive careful consideration at a meeting of the responsible technical committee, which you may attend. If you feel that your comments have not received a fair hearing you should make your views known to the ASTM Committee on Standards, 1916 Race St., Philadelphia, PA 19103.

Designation: D 2434 – 68 (Reapproved 1994)[ε1]

Standard Test Method for Permeability of Granular Soils (Constant Head)[1]

This standard is issued under the fixed designation D 2434; the number immediately following the designation indicates the year of original adoption or, in the case of revision, the year of last revision. A number in parentheses indicates the year of last reapproval. A superscript epsilon (ε) indicates an editorial change since the last revision or reapproval.

[ε1] NOTE—Editorial changes were made and Section 10 added editorially in September 1993.

1. Scope

1.1 This test method covers the determination of the coefficient of permeability by a constant-head method for the laminar flow of water through granular soils. The procedure is to establish representative values of the coefficient of permeability of granular soils that may occur in natural deposits as placed in embankments, or when used as base courses under pavements. In order to limit consolidation influences during testing, this procedure is limited to disturbed granular soils containing not more than 10 % soil passing the 75-µm (No. 200) sieve.

1.2 *This standard does not purport to address all of the safety problems, if any, associated with its use. It is the responsibility of the user of this standard to establish appropriate safety and health practices and determine the applicability of regulatory limitations prior to use.*

2. Referenced Documents

2.1 *ASTM Standards:*

D 422 Test Method for Particle-Size Analysis of Soils[2]

D 2049 Test Method for Relative Density of Cohesionless Soils[3]

3. Fundamental Test Conditions

3.1 The following ideal test conditions are prerequisites for the laminar flow of water through granular soils under constant-head conditions:

3.1.1 Continuity of flow with no soil volume change during a test,

3.1.2 Flow with the soil voids saturated with water and no air bubbles in the soil voids,

3.1.3 Flow in the steady state with no changes in hydraulic gradient, and

3.1.4 Direct proportionality of velocity of flow with hydraulic gradients below certain values, at which turbulent flow starts.

3.2. All other types of flow involving partial saturation of soil voids, turbulent flow, and unsteady state of flow are transient in character and yield variable and time-dependent coefficients of permeability; therefore, they require special test conditions and procedures.

4. Apparatus

4.1 *Permeameters,* as shown in Fig. 1, shall have specimen cylinders with minimum diameters approximately 8 or 12 times the maximum particle size in accordance with Table 1. The permeameter should be fitted with: (*1*) a porous disk or suitable reinforced screen at the bottom with a permeability greater than that of the soil specimen, but with openings sufficiently small (not larger than 10 % finer size) to prevent movement of particles; (*2*) manometer outlets for measuring the loss of head, h, over a length, l, equivalent to at least the diameter of the cylinder; (*3*) a porous disk or suitable reinforced screen with a spring attached to the top, or any other device, for applying a light spring pressure of 22 to 45-N (5 to 10-lbf) total load, when the top plate is attached in place. This will hold the placement density and volume of soil without significant change during the saturation of the specimen and the permeability testing to satisfy the requirement prescribed in 3.1.1.

4.2 *Constant-Head Filter Tank,* as shown in Fig. 1, to supply water and to remove most of the air from tap water, fitted with suitable control valves to maintain conditions described in 3.1.2.

NOTE 1—De-aired water may be used if preferred.

4.3 *Large Funnels,* fitted with special cylindrical spouts 25 mm (1 in.) in diameter for 9.5-mm (⅜-in.) maximum size particles and 13 mm (½ in.) in diameter for 2.00-mm (No. 10) maximum size particles. The length of the spout should be greater than the full length of the permeability chamber—at least 150 mm (6 in.).

4.4 *Specimen Compaction Equipment*[2]—Compaction equipment as deemed desirable may be used. The following are suggested: a vibrating tamper fitted with a tamping foot 51 mm (2 in.) in diameter; a sliding tamper with a tamping foot 51 mm (2 in.) in diameter, and a rod for sliding weights of 100 g (0.25 lb) (for sands) to 1 kg (2.25 lb) (for soils with a large gravel content), having an adjustable height of drop to 102 mm (4 in.) for sands and 203 mm (8 in.) for soils with large gravel contents.

4.5 *Vacuum Pump or Water-Faucet Aspirator,* for evacuating and for saturating soil specimens under full vacuum (see Fig. 2).

4.6 *Manometer Tubes,* with metric scales for measuring head of water.

4.7 *Balance,* of 2-kg (4.4-lb) capacity, sensitive to 1 g (0.002 lb).

4.8 *Scoop,* with a capacity of about 100 g (0.25 lb) of soil.

[1] This test method is under the jurisdiction of ASTM Committee D-18 on Soil and Rock and is the direct responsibility of Subcommittee D18.04 on Hydrologic Properties of Soil and Rocks.

Current edition approved Sept. 13, 1968. Originally issued 1965. Replaces D 2434 – 65 T.

[2] *Annual Book of ASTM Standards,* Vol 04.08.

[3] Discontinued—See *1983 Annual Book of ASTM Standards,* Vol 04.08.

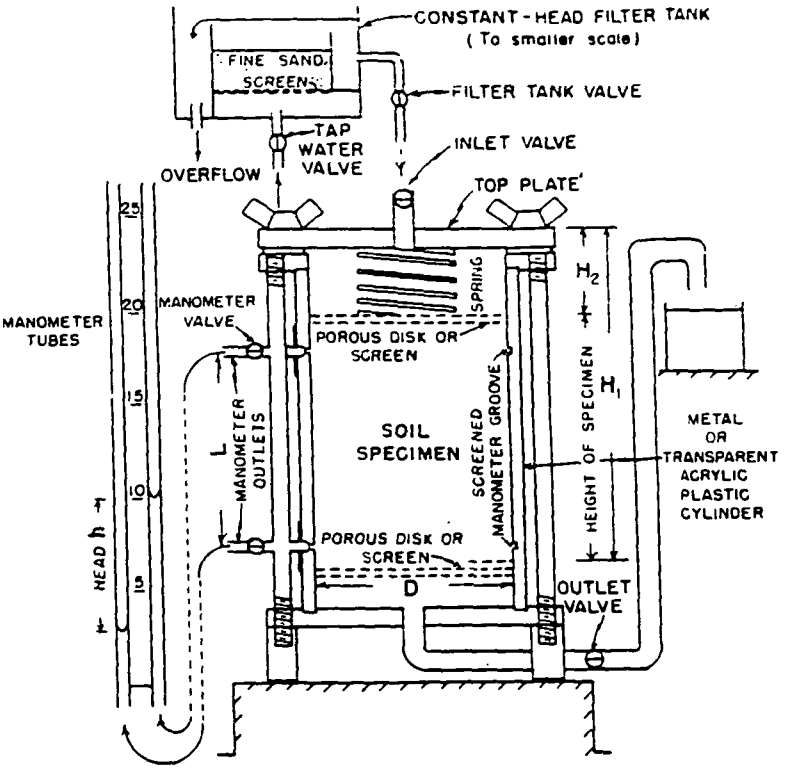

FIG. 1 Constant-Head Permeameter

4.9 *Miscellaneous Apparatus*—Thermometers, clock with sweep second hand, 250-mL graduate, quart jar, mixing pan, etc.

5. Sample

5.1 A representative sample of air-dried granular soil, containing less than 10 % of the material passing the 75-µm (No. 200) sieve and equal to an amount sufficient to satisfy the requirements prescribed in 5.2 and 5.3, shall be selected by the method of quartering.

5.2 A sieve analysis (see Method D 422) shall be made on a representative sample of the complete soil prior to the permeability test. Any particles larger than 19 mm (¾ in.) shall be separated out by sieving (Method D 422). This oversize material shall not be used for the permeability test, but the percentage of the oversize material shall be recorded.

NOTE 2—In order to establish representative values of coefficients of permeabilities for the range that may exist in the situation being investigated, samples of the finer, average, and coarser soils should be obtained for testing.

5.3 From the material from which the oversize has been removed (see 5.2), select by the method of quartering, a sample for testing equal to an amount approximately twice that required for filling the permeameter chamber.

6. Preparation of Specimens

6.1 The size of permeameter to be used shall be as prescribed in Table 1.

6.2 Make the following initial measurements in centimetres or square centimetres and record on the data sheet (Fig. 3); the inside diameter, D, of the permeameter; the length, L, between manometer outlets; the depth, H_1, measured at four symmetrically spaced points from the upper surface of the top plate of the permeability cylinder to the top of the upper porous stone or screen temporarily placed on the lower porous plate or screen. This automatically deducts the thickness of the upper porous plate or screen from the height measurements used to determine the volume of soil placed in the permeability cylinder. Use a duplicate top plate containing four large symmetrically spaced openings through which the necessary measurements can be made to determine the average value for H_1. Calculate the cross-sectional area, A, of the specimen.

6.3 Take a small portion of the sample selected as prescribed in 5.3 for water content determinations. Record

TABLE 1 Cylinder Diameter

Maximum Particle Size Lies Between Sieve Openings	Minimum Cylinder Diameter			
	Less than 35 % of Total Soil Retained on Sieve Opening		More than 35 % of Total Soil Retained on Sieve Opening	
	2.00-mm (No. 10)	9.5-mm (⅜-in.)	2.00-mm (No. 10)	9.5-mm (⅜-in.)
2.00-mm (No. 10) and 9.5-mm (⅜ in.)	76 mm (3 in.)	...	114 mm (4.5 in.)	...
9.5-mm (⅜-in.) and 19.0-mm (¾ in.)	...	152 mm (6 in.)	...	229 mm (9 in.)

194

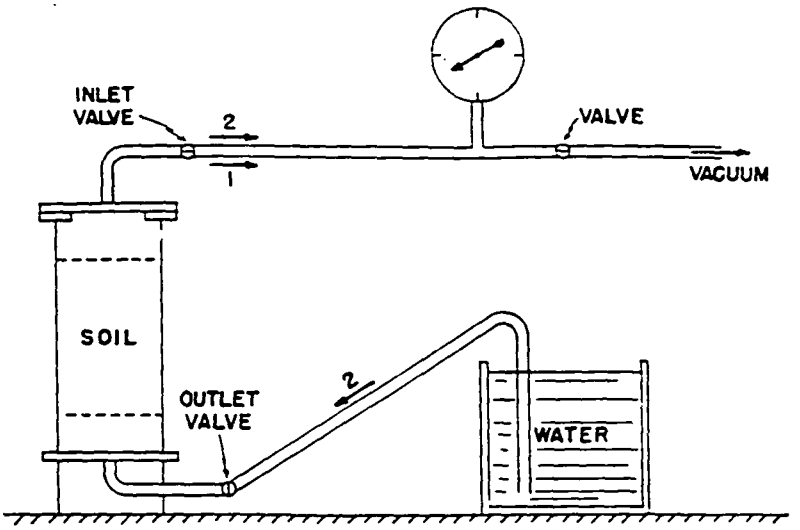

FIG. 2 Device for Evacuating and Saturating Specimen

the weight of the remaining air-dried sample (see 5.3), W_1, for unit weight determinations.

6.4 Place the prepared soil by one of the following procedures in uniform thin layers approximately equal in thickness after compaction to the maximum size of particle, but not less than approximately 15 mm (0.60 in.).

6.4.1 For soils having a maximum size of 9.5 mm (⅜ in.) or less, place the appropriate size of funnel, as prescribed in 4.3, in the permeability device with the spout in contact with the lower porous plate or screen, or previously formed layer, and fill the funnel with sufficient soil to form a layer, taking soil from different areas of the sample in the pan. Lift the funnel by 15 mm (0.60 in.), or approximately the unconsolidated layer thickness to be formed, and spread the soil with a slow spiral motion, working from the perimeter of the device toward the center, so that a uniform layer is formed. Remix the soil in the pan for each successive layer to reduce segregation caused by taking soil from the pan.

6.4.2 For soils with a maximum size greater than 9.5 mm (⅜ in.), spread the soil from a scoop. Uniform spreading can be obtained by sliding a scoopful of soil in a nearly horizontal position down along the inside surface of the device to the bottom or to the formed layer, then tilting the scoop and drawing it toward the center with a single slow motion; this allows the soil to run smoothly from the scoop in a windrow without segregation. Turn the permeability cylinder sufficiently for the next scoopful, thus progressing around the inside perimeter to form a uniform compacted layer of a thickness equal to the maximum particle size.

6.5 Compact successive layers of soil to the desired relative density by appropriate procedures, as follows, to a height of about 2 cm (0.8 in.) above the upper manometer outlet.

6.5.1 *Minimum Density (0 % Relative Density)*—Continue placing layers of soil in succession by one of the procedures described in 6.4.1 or 6.4.2 until the device is filled to the proper level.

6.5.2 *Maximum Density (100 % Relative Density):*

6.5.2.1 *Compaction by Vibrating Tamper*—Compact each layer of soil thoroughly with the vibrating tamper, distributing the light tamping action uniformly over the surface of the layer in a regular pattern. The pressure of contact and the length of time of the vibrating action at each spot should not cause soil to escape from beneath the edges of the tamping foot, thus tending to loosen the layer. Make a sufficient number of coverages to produce maximum density, as evidenced by practically no visible motion of surface particles adjacent to the edges of the tamping foot.

6.5.2.2 *Compaction by Sliding Weight Tamper*—Compact each layer of soil thoroughly by tamping blows uniformly distributed over the surface of the layer. Adjust the height of drop and give sufficient coverages to produce maximum density, depending on the coarseness and gravel content of the soil.

6.5.2.3 *Compaction by Other Methods*—Compaction may be accomplished by other approved methods, such as by vibratory packer equipment, where care is taken to obtain a uniform specimen without segregation of particle sizes (see Test Method D 2049).

6.5.3 *Relative Density Intermediate Between 0 and 100 %*—By trial in a separate container of the same diameter as the permeability cylinder, adjust the compaction to obtain reproducible values of relative density. Compact the soil in the permeability cylinder by these procedures in thin layers to a height about 2.0 cm (0.80 in.) above the upper manometer outlet.

NOTE 3—In order to bracket, systematically and representatively, the relative density conditions that may govern in natural deposits or in compacted embankments, a series of permeability tests should be made to bracket the range of field relative densities.

6.6 *Preparation of Specimen for Permeability Test:*

6.6.1 Level the upper surface of the soil by placing the upper porous plate or screen in position and by rotating it gently back and forth.

6.6.2 Measure and record: the final height of specimen, $H_1 - H_2$, by measuring the depth, H_2, from the upper surface of the perforated top plate employed to measure H_1 to the top of the upper porous plate or screen at four symmetrically spaced points after compressing the spring lightly to seat the porous plate or screen during the measurements; the

PERMEABILITY TEST ON GRANULAR SOIL

Test No. Date of Test

Location of Sample Date Sampled Report

Boring— Sample— Depth—

(a) DESCRIPTION OF SOIL _____

MATERIALS USED: _____

(b) UNIT WEIGHT DETERMINATION:

Diameter, D, cm	Height Before, H_1	Weight Before, W_1
Area, A, cm²	Height After, H_2	Weight After, W_2
Length, L, cm	Height Net, cm	Weight Net, g

Moisture Content (air-dried) _____

W (max) Dry Unit Weight, lb/ft³ W _____

W (min) Void Ratio, e _____

Relative Density, RD _____

(c) PERMEABILITY TEST (DEGREE OF COMPACTNESS)

Test No.	Manometers		Head, h cm	Q cm³	t s	Q/At	h/L	Temperature, °C	k cm/s
	H_1	H_2							
1									
2									
3									
4									
5									
6									

FIG. 3 Permeability Test Data Sheet

final weight of air-dried soil used in the test ($W_1 - W_2$) by weighing the remainder of soil, W_2, left in the pan. Compute and record the unit weights, void ratio, and relative density of the test specimen.

6.6.3 With its gasket in place, press down the top plate against the spring and attach it securely to the top of the permeameter cylinder, making an air-tight seal. This satisfies the condition described in 3.1.1 of holding the initial density without significant volume change during the test.

6.6.4 Using a vacuum pump or suitable aspirator, evacuate the specimen under 50 cm (20 in.) Hg minimum for 15 min to remove air adhering to soil particles and from the voids. Follow the evacuation by a slow saturation of the specimen from the bottom upward (Fig. 2) under full vacuum in order to free any remaining air in the specimen. Continued saturation of the specimen can be maintained more adequately by the use of (*1*) de-aired water, or (*2*) water maintained in an in-flow temperature sufficiently high to cause a decreasing temperature gradient in the specimen during the test. Native water or water of low mineral content (Note 4) should be used for the test, but in any case the fluid should be described on the report form (Fig. 3). This satisfies the condition described in 3.1.2 for saturation of soil voids.

NOTE 4—Native water is the water occurring in the rock or soil *in situ*. It should be used if possible, but it (as well as de-aired water) may be a refinement not ordinarily feasible for large-scale production testing.

6.6.5 After the specimen has been saturated and the permeameter is full of water, close the bottom valve on the outlet tube (Fig. 2) and disconnect the vacuum. Care should be taken to ensure that the permeability flow system and the manometer system are free of air and are working satisfactorily. Fill the inlet tube with water from the constant-head tank by slightly opening the filter tank valve. Then connect the inlet tube to the top of the permeameter, open the inlet valve slightly and open the manometer outlet cocks slig to allow water to flow, thus freeing them of air. Conne water manometer tubes to the manometer outlets a

196

with water to remove the air. Close the inlet valve and open the outlet valve to allow the water in the manometer tubes to reach their stable water level under zero head.

7. Procedure

7.1 Open the inlet valve from the filter tank slightly for the first run to conditions described in 3.1.3, delay measurements of quantity of flow and heat until a stable head condition without appreciable drift in water manometer levels is attained. Measure and record the time, t, head, h (the difference in level in the manometers), quantity of flow, Q, and water temperature, T.

7.2 Repeat test runs at heads increasing by 0.5 cm in order to establish accurately the region of laminar flow with velocity, v (where $v = Q/At$), directly proportional to hydraulic gradient, i (where $i = h/L$). When departures from the linear relation become apparent, indicating the initiation of turbulent flow conditions, 1-cm intervals of head may be used to carry the test run sufficiently along in the region of turbulent flow to define this region if it is significant for field conditions.

NOTE 5—Much lower values of hydraulic gradient, h/L, are required than generally recognized, in order to ensure laminar flow conditions. The following values are suggested: loose compactness ratings, h/L from 0.2 to 0.3, and dense compactness ratings, h/L from 0.3 to 0.5, the lower values of h/L applying to coarser soils and the higher values to finer soils.

7.3 At the completion of the permeability test, drain the specimen and inspect it to establish whether it was essentially homogeneous and isotropic in character. Any light and dark alternating horizontal streaks or layers are evidence of segregation of fines.

8. Calculation

8.1 Calculate the coefficient of permeability, k, as follows:

$$k = QL/Ath$$

where:

k = coefficient of permeability,
Q = quantity of water discharged,
L = distance between manometers,
A = cross-sectional area of specimen,
t = total time of discharge,
h = difference in head on manometers.

8.2 Correct the permeability to that for 20°C (68°F) by multiplying k (see 8.1) by the ratio of the viscosity of water at test temperature to the viscosity of water at 20°C (68°F).

9. Report

9.1 The report of permeability test shall include the following information:

9.1.1 Project, dates, sample number, location, depth, and any other pertinent information,

9.1.2 Grain size analysis, classification, maximum particle size, and percentage of any oversize material not used,

9.1.3 Dry unit weight, void ratio, relative density as placed, and maximum and minimum densities,

9.1.4 A statement of any departures from these test conditions, so the results can be evaluated and used,

9.1.5 Complete test data, as indicated in the laboratory form for test data (see Fig. 3), and

9.1.6 Test curves plotting velocity, Q/At, versus hydraulic gradient, h/L, covering the ranges of soil identifications and of relative densities.

10. Keywords

10.1 constant head; granular; permeability; soils

The American Society for Testing and Materials takes no position respecting the validity of any patent rights asserted in connection with any item mentioned in this standard. Users of this standard are expressly advised that determination of the validity of any such patent rights, and the risk of infringement of such rights, are entirely their own responsibility.

This standard is subject to revision at any time by the responsible technical committee and must be reviewed every five years and if not revised, either reapproved or withdrawn. Your comments are invited either for revision of this standard or for additional standards and should be addressed to ASTM Headquarters. Your comments will receive careful consideration at a meeting of the responsible technical committee, which you may attend. If you feel that your comments have not received a fair hearing you should make your views known to the ASTM Committee on Standards, 1916 Race St., Philadelphia, PA 19103.

Designation: D 2487 - 92

Standard
Classification of Soils for Engineering Purposes (Unified Soil Classification System)[1]

This standard is issued under the fixed designation D 2487; the number immediately following the designation indicates the year of original adoption or, in the case of revision, the year of last revision. A number in parentheses indicates the year of last reapproval. A superscript epsilon (ε) indicates an editorial change since the last revision or reapproval.

This standard has been approved for use by agencies of the Department of Defense. Consult the DOD Index of Specifications and Standards for the specific year of issue which has been adopted by the Department of Defense.

1. Scope

1.1 This standard describes a system for classifying mineral and organo-mineral soils for engineering purposes based on laboratory determination of particle-size characteristics, liquid limit, and plasticity index and shall be used when precise classification is required.

NOTE 1—Use of this standard will result in a single classification group symbol and group name except when a soil contains 5 to 12 % fines or when the plot of the liquid limit and plasticity index values falls into the crosshatched area of the plasticity chart. In these two cases, a dual symbol is used, for example, GP-GM, CL-ML. When the laboratory test results indicate that the soil is close to another soil classification group, the borderline condition can be indicated with two symbols separated by a slash. The first symbol should be the one based on this standard, for example, CL/CH, GM/SM, SC/CL. Borderline symbols are particularly useful when the liquid limit value of clayey soils is close to 50. These soils can have expansive characteristics and the use of a borderline symbol (CL/CH, CH/CL) will alert the user of the assigned classifications of expansive potential.

1.2 The group symbol portion of this sytem is based on laboratory tests performed on the portion of a soil sample passing the 3-in. (75-mm) sieve (see Specification E 11).

1.3 As a classification system, this standard is limited to naturally occurring soils.

NOTE 2—The group names and symbols used in this test method may be used as a descriptive system applied to such materials as shale, claystone, shells, crushed rock, etc. See Appendix X2.

1.4 This standard is for qualitative application only.

NOTE 3—When quantitative information is required for detailed designs of important structures, this test method must be supplemented by laboratory tests or other quantitative data to determine performance characteristics under expected field conditions.

1.5 This standard is the ASTM version of the Unified Soil Classification System. The basis for the classification scheme is the Airfield Classification System developed by A. Casagrande in the early 1940's.[2] It became known as the Unified Soil Classification System when several U.S. Government Agencies adopted a modified version of the Airfield System in 1952.

1.6 *This standard does not purport to address all of the safety problems, if any, associated with its use. It is the responsibility of the user of this standard to establish appropriate safety and health practices and determine the applicability of regulatory limitations prior to use.*

2. Referenced Documents

2.1 *ASTM Standards:*

C 117 Test Method for Materials Finer Than 75-µm (No. 200) Sieve in Mineral Aggregates by Washing[3]
C 136 Method for Sieve Analysis of Fine and Coarse Aggregates[3]
C 702 Practice for Reducing Field Samples of Aggregate to Testing Size[3]
D 420 Guide for Investigating and Sampling Soil and Rock[4]
D 421 Practice for Dry Preparation of Soil Samples for Particle-Size Analysis and Determination of Soil Constants[4]
D 422 Test Method for Particle-Size Analysis of Soils[4]
D 653 Terminology Relating to Soil, Rock, and Contained Fluids[4]
D 1140 Test Method for Amount of Material in Soils Finer than the No. 200 (75-µm) Sieve[4]
D 2216 Test Method for Laboratory Determination of Water (Moisture) Content of Soil and Rock[4]
D 2217 Practice for Wet Preparation of Soil Samples for Particle-Size Analysis and Determination of Soil Constants[4]
D 2488 Practice for Description and Identification of Soils (Visual-Manual Procedure)[4]
D 4083 Practice for Description of Frozen Soils (Visual-Manual Procedure)[4]
D 4318 Test Method for Liquid Limit, Plastic Limit, and Plasticity Index of Soils[4]
D 4427 Classification of Peat Samples by Laboratory Testing[4]
E 11 Specification for Wire-Cloth Sieves for Testing Purposes[3]

3. Terminology

3.1 *Definitions*—Except as listed below, all definitions are in accordance with Terminology D 653.

[1] This standard is under the jurisdiction of ASTM Committee D-18 on Soil and Rock and is the direct responsibility of Subcommittee D18.07 on Identification and Classification of Soils.

Current edition approved May 15, 1992. Published July 1992. Originally published as D 2487 - 66 T. Last previous edition D 2487 - 90ε[1].

[2] Casagrande, A., "Classification and Identification of Soils," *Transactions*, ASCE, 1948, p. 901.

[3] *Annual Book of ASTM Standards*, Vol 04.02.

[4] *Annual Book of ASTM Standards*, Vol 04.08.

NOTE 4—For particles retained on a 3-in. (75-mm) U.S. standard sieve, the following definitions are suggested:

Cobbles—particles of rock that will pass a 12-in. (300-mm) square opening and be retained on a 3-in. (75-mm) U.S. standard sieve, and

Boulders—particles of rock that will not pass a 12in. (300-mm) square opening

3.1.1 *gravel*—particles of rock that will pass a 3-in. (75-mm) sieve and be retained on a No. 4 (4.75-mm) U.S. standard sieve with the following subdivisions:

Coarse—passes 3-in. (75-mm) sieve and retained on ¾-in. (19-mm) sieve, and

Fine—passes ¾-in. (19-mm) sieve and retained on No. 4 (4.75-mm) sieve.

3.1.2 *sand*—particles of rock that will pass a No. 4 (4.75-mm) sieve and be retained on a No. 200 (75-µm) U.S. standard sieve with the following subdivisions:

Coarse—passes No. 4 (4.75-mm) sieve and retained on No. 10 (2.00-mm) sieve,

Medium—passes No. 10 (2.00-mm) sieve and retained on No. 40 (425-µm) sieve, and

Fine—passes No. 40 (425-µm) sieve and retained on No. 200 (75-µm) sieve.

3.1.3 *clay*—soil passing a No. 200 (75-µm) U.S. standard sieve that can be made to exhibit plasticity (putty-like properties) within a range of water contents and that exhibits considerable strength when air dry. For classification, a clay is a fine-grained soil, or the fine-grained portion of a soil, with a plasticity index equal to or greater than 4, and the plot of plasticity index versus liquid limit falls on or above the "A" line.

3.1.4 *silt*—soil passing a No. 200 (75-µm) U.S. standard sieve that is nonplastic or very slightly plastic and that exhibits little or no strength when air dry. For classification, a silt is a fine-grained soil, or the fine-grained portion of a soil, with a plasticity index less than 4 or if the plot of plasticity index versus liquid limit falls below the "A" line.

3.1.5 *organic clay*—a clay with sufficient organic content to influence the soil properties. For classification, an organic clay is a soil that would be classified as a clay except that its liquid limit value after oven drying is less than 75 % of its liquid limit value before oven drying.

3.1.6 *organic silt*—a silt with sufficient organic content to influence the soil properties. For classification, an organic silt is a soil that would be classified as a silt except that its liquid limit value after oven drying is less than 75 % of its liquid limit value before oven drying.

3.1.7 *peat*—a soil composed of vegetable tissue in various stages of decomposition usually with an organic odor, a dark-brown to black color, a spongy consistency, and a texture ranging from fibrous to amorphous.

3.2 *Descriptions of Terms Specific to This Standard:*

3.2.1 *coefficient of curvature*, Cc—the ratio $(D_{30})^2/(D_{10} \times D_{60})$, where D_{60}, D_{30}, and D_{10} are the particle diameters corresponding to 60, 30, and 10 % finer on the cumulative particle-size distribution curve, respectively.

3.2.2 *coefficient of uniformity*, Cu—the ratio D_{60}/D_{10}, where D_{60} and D_{10} are the particle diameters corresponding to 60 and 10 % finer on the cumulative particle-size distribution curve, respectively.

4. Summary

4.1 As illustrated in Table 1, this classification system identifies three major soil divisions: coarse-grained soils, fine-grained soils, and highly organic soils. These three divisions are further subdivided into a total of 15 basic soil groups.

4.2 Based on the results of visual observations and prescribed laboratory tests, a soil is catalogued according to the basic soil groups, assigned a group symbol(s) and name, and thereby classified. The flow charts, Fig. 1 for fine-grained soils, and Fig. 2 for coarse-grained soils, can be used to assign the appropriate group symbol(s) and name.

5. Significance and Use

5.1 This standard classifies soils from any geographic location into categories representing the results of prescribed laboratory tests to determine the particle-size characteristics, the liquid limit, and the plasticity index.

5.2 The assigning of a group name and symbol(s) along with the descriptive information required in Practice D 2488 can be used to describe a soil to aid in the evaluation of its significant properties for engineering use.

5.3 The various groupings of this classification system have been devised to correlate in a general way with the engineering behavior of soils. This standard provides a useful first step in any field or laboratory investigation for geotechnical engineering purposes.

5.4 This standard may also be used as an aid in training personnel in the use of Practice D 2488.

5.5 This standard may be used in combination with Practice D 4083 when working with frozen soils.

6. Apparatus

6.1 In addition to the apparatus that may be required for obtaining and preparing the samples and conducting the prescribed laboratory tests, a plasticity chart, similar to Fig. 3, and a cumulative particle-size distribution curve, similar to Fig. 4, are required.

NOTE 5—The "U" line shown on Fig. 3 has been empirically determined to be the approximate "upper limit" for natural soils. It is a good check against erroneous data, and any test results that plot above or to the left of it should be verified.

7. Sampling

7.1 Samples shall be obtained and identified in accordance with a method or methods, recommended in Recommended Guide D 420 or by other accepted procedures.

7.2 For accurate identification, the minimum amount of test sample required for this test method will depend on which of the laboratory tests need to be performed. Where only the particle-size analysis of the sample is required, specimens having the following minimum dry weights are required:

Maximum Particle Size, Sieve Opening	Minimum Specimen Size, Dry Weight
4.75 mm (No. 4)	100 g (0.25 lb)
9.5 mm (⅜ in.)	200 g (0.5 lb)
19.0 mm (¾ in.)	1.0 kg (2.2 lb)
38.1 mm (1½ in.)	8.0 kg (18 lb)
75.0 mm (3 in.)	60.0 kg (132 lb)

Whenever possible, the field samples should have weights two to four times larger than shown.

199

TABLE 1 Soil Classification Chart

Criteria for Assigning Group Symbols and Group Names Using Laboratory Tests[A]				Soil Classification	
				Group Symbol	Group Name[B]
COARSE-GRAINED SOILS More than 50 % retained on No. 200 sieve	Gravels More than 50 % of coarse fraction retained on No. 4 sieve	Clean Gravels Less than 5 % fines[C]	Cu ≥ 4 and 1 ≤ Cc ≤ 3[E]	GW	Well-graded gravel[F]
			Cu < 4 and/or 1 > Cc > 3[E]	GP	Poorly graded gravel[F]
		Gravels with Fines More than 12 % fines[C]	Fines classify as ML or MH	GM	Silty gravel[F,G,H]
			Fines classify as CL or CH	GC	Clayey gravel[F,G,H]
	Sands 50 % or more of coarse fraction passes No. 4 sieve	Clean Sands Less than 5 % fines[D]	Cu ≥ 6 and 1 ≤ Cc ≤ 3[E]	SW	Well-graded sand[I]
			Cu < 6 and/or 1 > Cc > 3[E]	SP	Poorly graded sand[I]
		Sands with Fines More than 12 % fines[D]	Fines classify as ML or MH	SM	Silty sand[G,H,I]
			Fines classify as CL or CH	SC	Clayey sand[G,H,I]
FINE-GRAINED SOILS 50 % or more passes the No. 200 sieve	Silts and Clays Liquid limit less than 50	inorganic	PI > 7 and plots on or above "A" line[J]	CL	Lean clay[K,L,M]
			PI < 4 or plots below "A" line[J]	ML	Silt[K,L,M]
		organic	$\frac{\text{Liquid limit – oven dried}}{\text{Liquid limit – not dried}} < 0.75$	OL	Organic clay[K,L,M,N] / Organic silt[K,L,M,O]
	Silts and Clays Liquid limit 50 or more	inorganic	PI plots on or above "A" line	CH	Fat clay[K,L,M]
			PI plots below "A" line	MH	Elastic silt[K,L,M]
		organic	$\frac{\text{Liquid limit – oven dried}}{\text{Liquid limit – not dried}} < 0.75$	OH	Organic clay[K,L,M,P] / Organic silt[K,L,M,Q]
HIGHLY ORGANIC SOILS	Primarily organic matter, dark in color, and organic odor			PT	Peat

[A] Based on the material passing the 3-in. (75-mm) sieve.

[B] If field sample contained cobbles or boulders, or both, add "with cobbles or boulders, or both" to group name.

[C] Gravels with 5 to 12 % fines require dual symbols:
GW-GM well-graded gravel with silt
GW-GC well-graded gravel with clay
GP-GM poorly graded gravel with silt
GP-GC poorly graded gravel with clay

[D] Sands with 5 to 12 % fines require dual symbols:
SW-SM well-graded sand with silt
SW-SC well-graded sand with clay
SP-SM poorly graded sand with silt
SP-SC poorly graded sand with clay

[E] $Cu = D_{60}/D_{10}$ $\quad Cc = \frac{(D_{30})^2}{D_{10} \times D_{60}}$

[F] If soil contains ≥ 15 % sand, add "with sand" to group name.

[G] If fines classify as CL-ML, use dual symbol GC-GM, or SC-SM.

[H] If fines are organic, add "with organic fines" to group name.

[I] If soil contains ≥ 15 % gravel, add "with gravel" to group name.

[J] If Atterberg limits plot in hatched area, soil is a CL-ML, silty clay.

[K] If soil contains 15 to 29 % plus No. 200, add "with sand" or "with gravel," whichever is predominant.

[L] If soil contains ≥ 30 % plus No. 200, predominantly sand, add "sandy" to group name.

[M] If soil contains ≥ 30 % plus No. 200, predominantly gravel, add "gravelly" to group name.

[N] PI ≥ 4 and plots on or above "A" line.

[O] PI < 4 or plots below "A" line.

[P] PI plots on or above "A" line.

[Q] PI plots below "A" line.

7.3 When the liquid and plastic limit tests must also be performed, additional material will be required sufficient to provide 150 g to 200 g of soil finer than the No. 40 (425-µm) sieve.

7.4 If the field sample or test specimen is smaller than the minimum recommended amount, the report shall include an appropriate remark.

8. Classification of Peat

8.1 A sample composed primarily of vegetable tissue in various stages of decomposition and has a fibrous to amorphous texture, a dark-brown to black color, and an organic odor should be designated as a highly organic soil and shall be classified as peat, PT, and not subjected to the classification procedures described hereafter.

8.2 If desired, classification of type of peat can be performed in accordance with Classification D 4427.

9. Preparation for Classification

9.1 Before a soil can be classified according to this standard, generally the particle-size distribution of the minus 3-in. (75-mm) material and the plasticity characteristics of the minus No. 40 (425-µm) sieve material must be determined. See 9.8 for the specific required tests.

9.2 The preparation of the soil specimen(s) and the testing for particle-size distribution and liquid limit and plasticity index shall be in accordance with accepted standard procedures. Two procedures for preparation of the soil specimens for testing for soil classification purposes are given in Appendixes X3 and X4. Appendix X3 describes the wet preparation method and is the preferred method for cohesive soils that have never dried out and for organic soils.

9.3 When reporting soil classifications determined by this standard, the preparation and test procedures used shall be reported or referenced.

9.4 Although the test procedure used in determining the particle-size distribution or other considerations may require a hydrometer analysis of the material, a hydrometer analysis is not necessary for soil classification.

9.5 The percentage (by dry weight) of any plus 3-in. (75-mm) material must be determined and reported as auxiliary information.

9.6 The maximum particle size shall be determined (measured or estimated) and reported as auxiliary information.

9.7 When the cumulative particle-size distribution is required, a set of sieves shall be used which include the

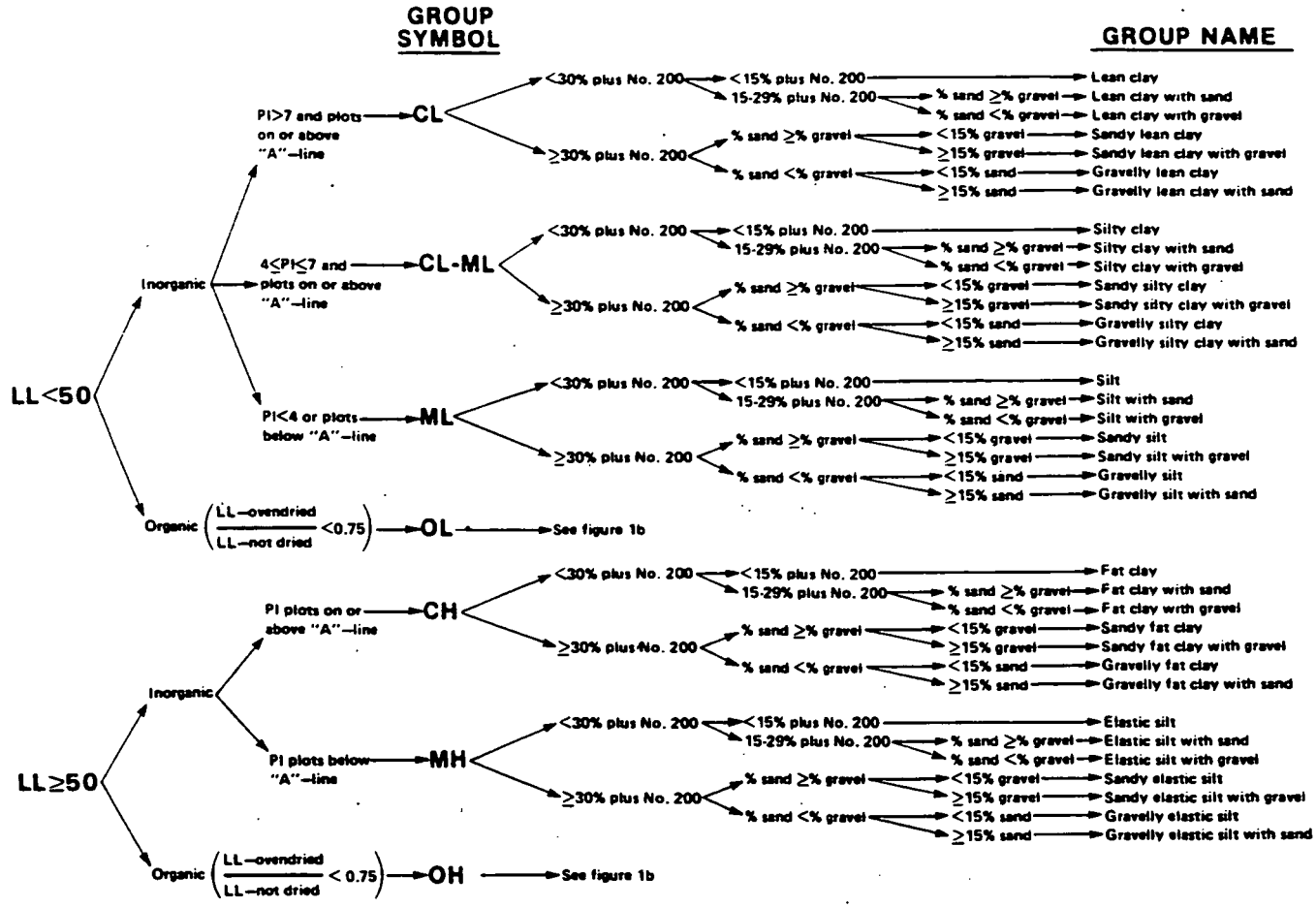

FIG. 1a Flow Chart for Classifying Fine-Grained Soil (50 % or More Passes No. 200 Sieve)

following sizes (with the largest size commensurate with the maximum particle size) with other sieve sizes as needed or required to define the particle-size distribution:

3-in. (75-mm)
¾-in.(19.0-mm)
No. 4 (4.75-mm)
No. 10 (2.00-mm)
No. 40 (425-µm)
No. 200 (75-µm)

9.8 The tests required to be performed in preparation for classification are as follows:

9.8.1 For soils estimated to contain less than 5 % fines, a plot of the cumulative particle-size distribution curve of the fraction coarser than the No. 200 (75-µm) sieve is required. The cumulative particle-size distribution curve may be plotted on a graph similar to that shown in Fig. 4.

9.8.2 For soils estimated to contain 5 to 15 % fines, a cumulative particle-size distribution curve, as described in 9.8.1, is required, and the liquid limit and plasticity index are required.

9.8.2.1 If sufficient material is not available to determine the liquid limit and plasticity index, the fines should be estimated to be either silty or clayey using the procedures described in Practice D 2488 and so noted in the report.

9.8.3 For soils estimated to contain 15 % or more fines, a determination of the percent fines, percent sand, and percent gravel is required, and the liquid limit and plasticity index are required. For soils estimated to contain 90 % fines or more, the percent fines, percent sand, and percent gravel may be estimated using the procedures described in Practice D 2488 and so noted in the report.

10. Preliminary Classification Procedure

10.1 Class the soil as fine-grained if 50 % or more by dry weight of the test specimen passes the No. 200 (75-µm) sieve and follow Section 11.

10.2 Class the soil as coarse-grained if more than 50 % by dry weight of the test specimen is retained on the No. 200 (75-µm) sieve and follow Section 12.

11. Procedure for Classification of Fine-Grained Soils (50 % or more by dry weight passing the No. 200 (75-µm) sieve)

11.1 The soil is an inorganic clay if the position of the plasticity index versus liquid limit plot, Fig. 3, falls on or above the "A" line, the plasticity index is greater than 4, and the presence of organic matter does not influence the liquid limit as determined in 11.3.2.

NOTE 6—The plasticity index and liquid limit are determined on the minus No. 40 (425 µm) sieve material.

11.1.1 Classify the soil as a *lean clay*, CL, if the liquid limit is less than 50. See area identified as CL on Fig. 3.

11.1.2 Classify the soil as a *fat clay*, CH, if the liquid limit

201

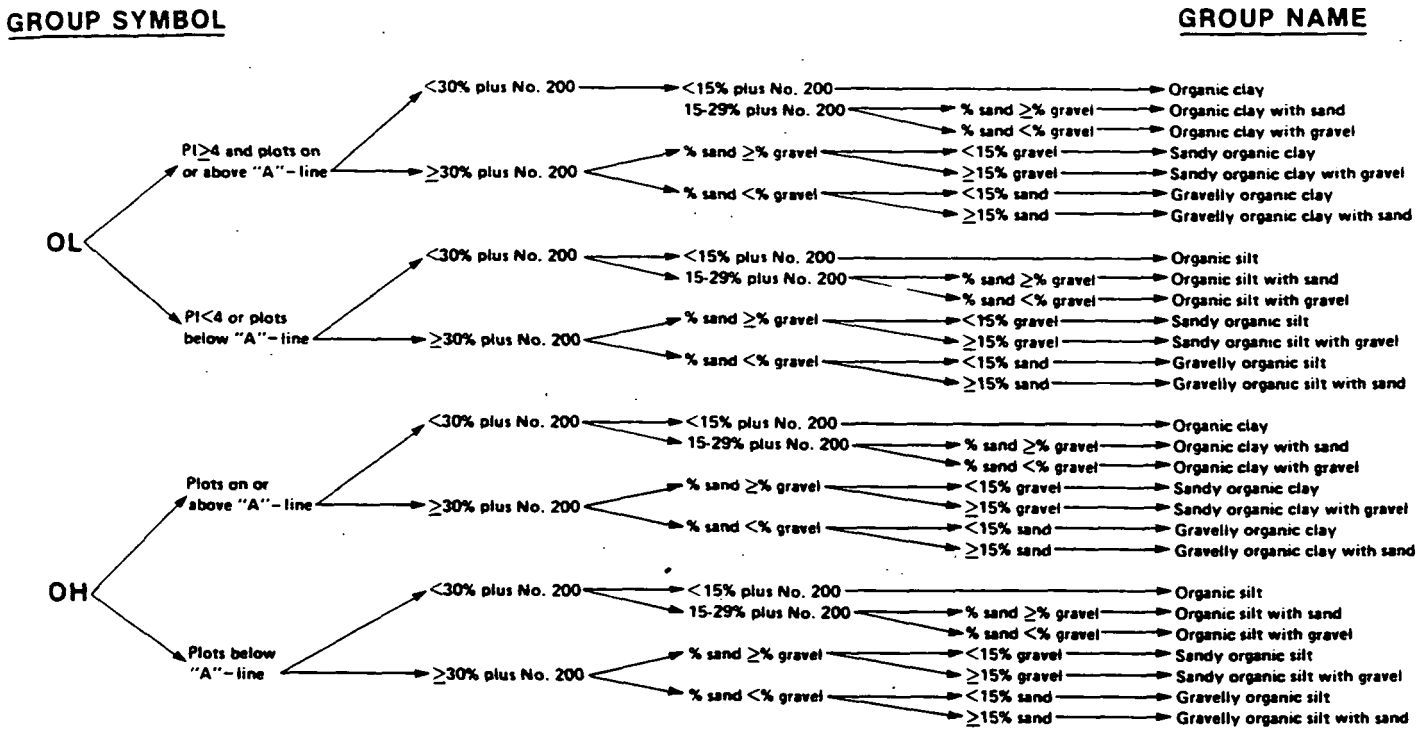

FIG. 1b Flow Chart for Classifying Organic Fine-Grained Soil (50 % or More Passes No. 200 Sieve)

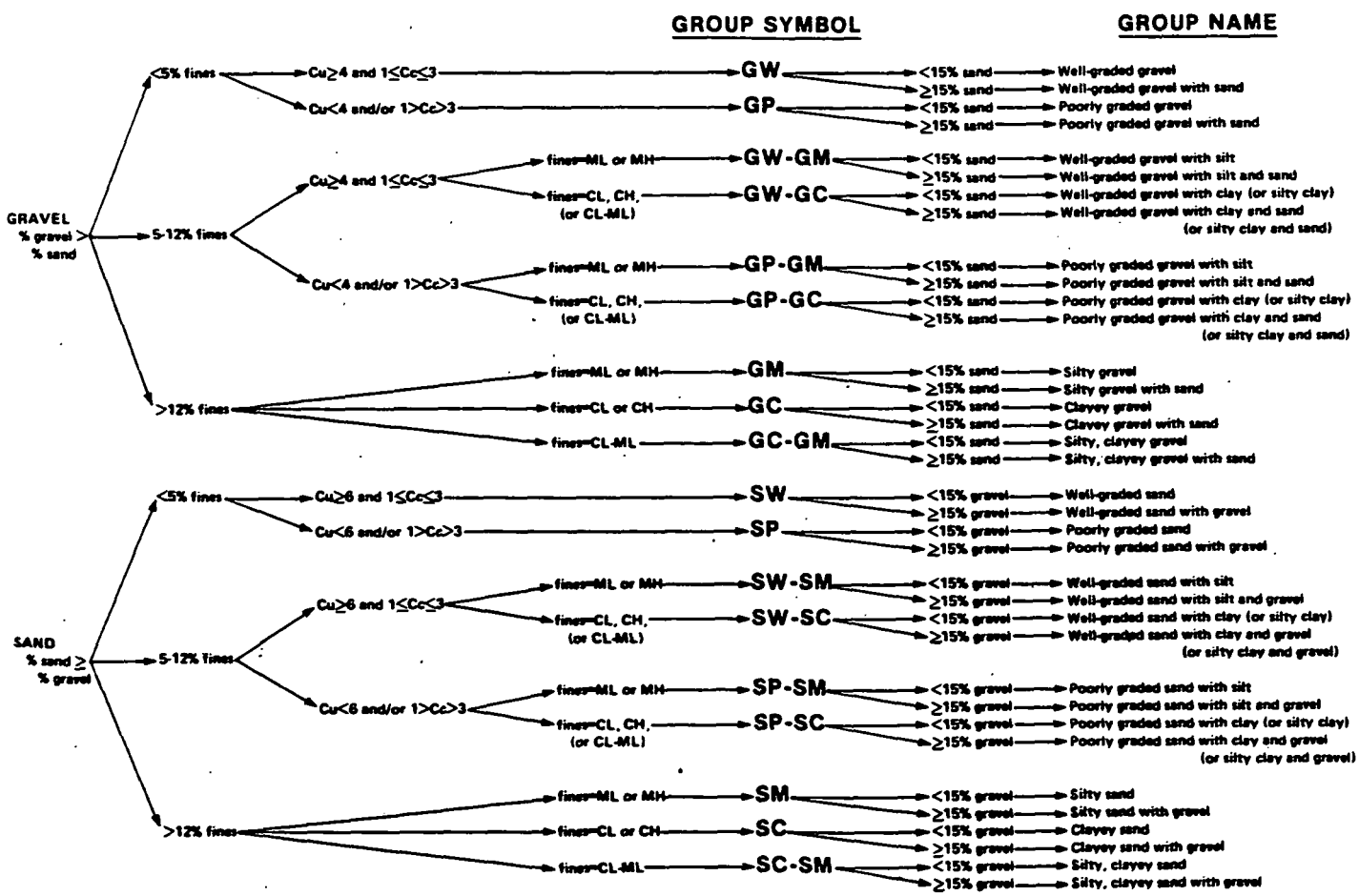

FIG. 2 Flow Chart for Classifying Coarse-Grained Soils (More Than 50 % Retained on No. 200 Sieve)

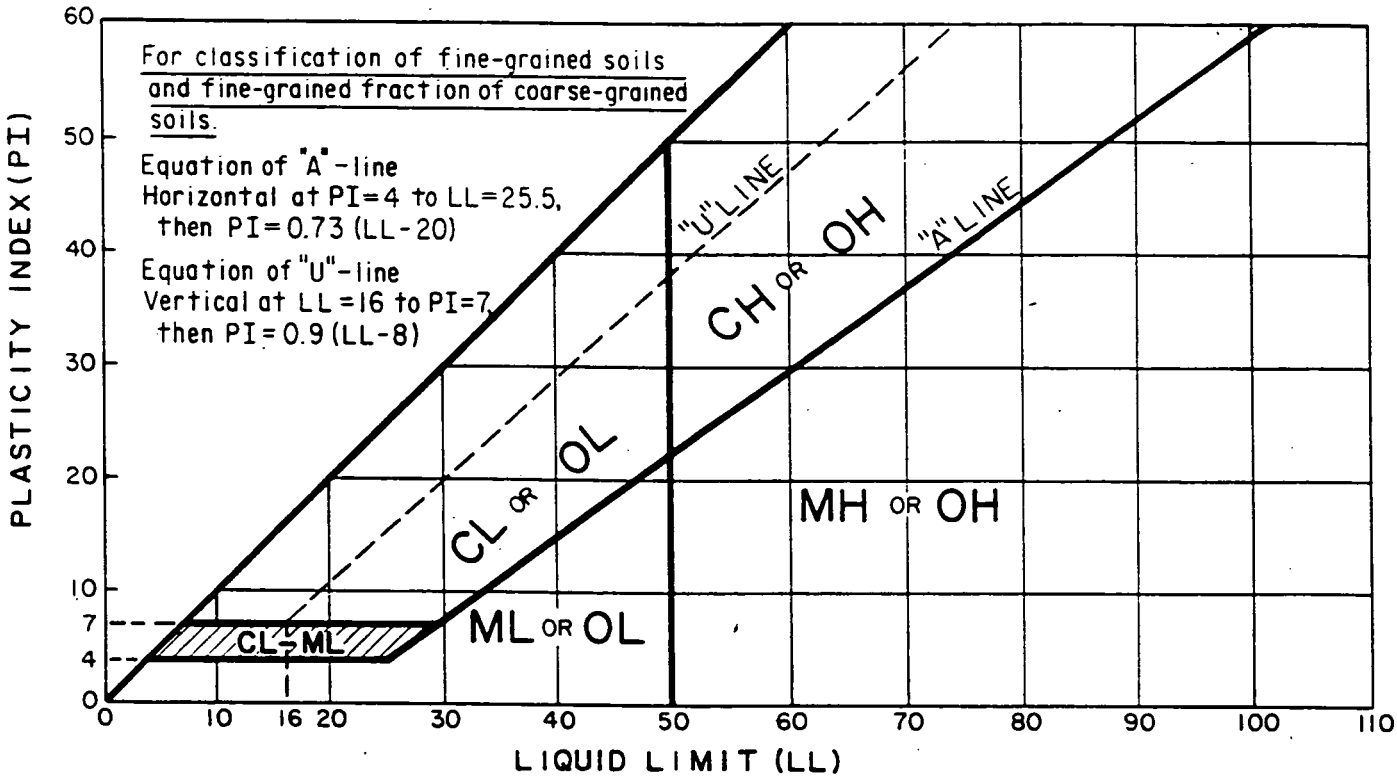

FIG. 3 Plasticity Chart

's 50 or greater. See area identified as CH on Fig. 3.

NOTE 7—In cases where the liquid limit exceeds 110 or the plasticity index exceeds 60, the plasticity chart may be expanded by maintaining the same scale on both axes and extending the "A" line at the indicated slope.

11.1.3 Classify the soil as a *silty clay*, CL-ML, if the position of the plasticity index versus liquid limit plot falls on or above the "A" line and the plasticity index is in the range of 4 to 7. See area identified as CL-ML on Fig. 3.

11.2 The soil is an inorganic silt if the position of the plasticity index versus liquid limit plot, Fig. 3, falls below the "A" line or the plasticity index is less than 4, and presence of organic matter does not influence the liquid limit as determined in 11.3.2.

11.2.1 Classify the soil as a *silt*, ML, if the liquid limit is less than 50. See area identified as ML on Fig. 3.

11.2.2 Classify the soil as an *elastic silt*, MH, if the liquid limit is 50 or greater. See area identified as MH on Fig. 3.

11.3 The soil is an organic silt or clay if organic matter is present in sufficient amounts to influence the liquid limit as determined in 11.3.2.

11.3.1 If the soil has a dark color and an organic odor when moist and warm, a second liquid limit test shall be performed on a test specimen which has been oven dried at 110 ± 5°C to a constant weight, typically over night.

11.3.2 The soil is an organic silt or organic clay if the liquid limit after oven drying is less than 75 % of the liquid limit of the original specimen determined before oven drying (see Procedure B of Practice D 2217).

11.3.3 Classify the soil as an *organic silt* or *organic clay*, OL, if the liquid limit (not oven dried) is less than 50 %. Classify the soil as an *organic silt*, OL, if the plasticity index is less than 4, or the position of the plasticity index versus liquid limit plot falls below the "A" line. Classify the soil as an *organic clay*, OL, if the plasticity index is 4 or greater and the position of the plasticity index versus liquid limit plot falls on or above the "A" line. See area identified as OL (or CL-ML) on Fig. 3.

11.3.4 Classify the soil as an *organic clay* or *organic silt*, OH, if the liquid limit (not oven dried) is 50 or greater. Classify the soil as an *organic silt*, OH, if the position of the plasticity index versus liquid limit plot falls below the "A" line. Classify the soil as an *organic clay*, OH, if the position of the plasticity index versus liquid-limit plot falls on or above the "A" line. See area identified as OH on Fig. 3.

11.4 If less than 30 % but 15 % or more of the test specimen is retained on the No. 200 (75-µm) sieve, the words "with sand" or "with gravel" (whichever is predominant) shall be added to the group name. For example, lean clay with sand, CL; silt with gravel, ML. If the percent of sand is equal to the percent of gravel, use "with sand."

11.5 If 30 % or more of the test specimen is retained on the No. 200 (75-µm) sieve, the words "sandy" or "gravelly" shall be added to the group name. Add the word "sandy" if 30 % or more of the test specimen is retained on the No. 200 (75-µm) sieve and the coarse-grained portion is predominantly sand. Add the word "gravelly" if 30 % or more of the test specimen is retained on the No. 200 (75-µm) sieve and the coarse-grained portion is predominantly gravel. For example, sandy lean clay, CL; gravelly fat clay, CH; sandy silt, ML. If the percent of sand is equal to the percent of gravel, use "sandy."

203

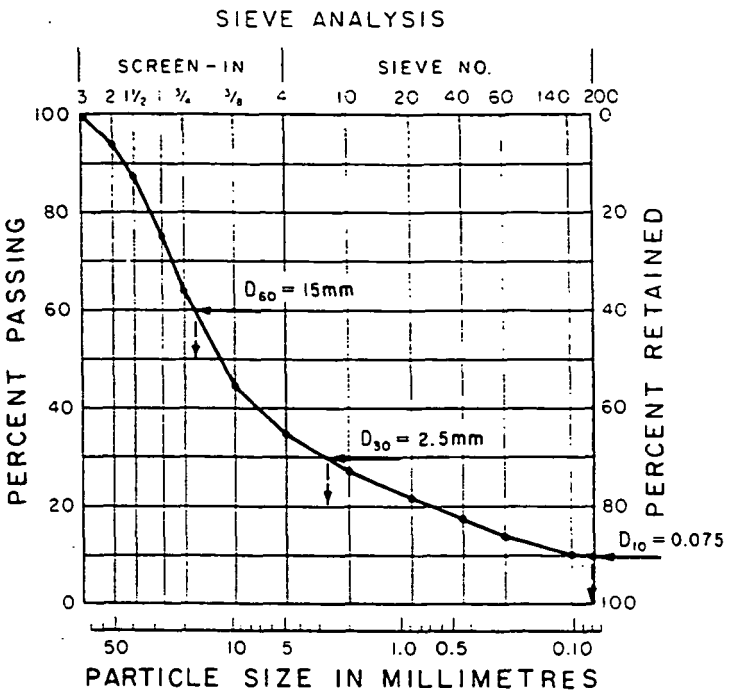

$$Cu = \frac{D_{60}}{D_{10}} = \frac{15}{0.075} = 200 \qquad Cc = \frac{(D_{30})^2}{D_{10} \times D_{60}} = \frac{(2.5)^2}{0.075 \times 15} = 5.6$$

FIG. 4 Cumulative Particle-Size Plot

12. Procedure for Classification of Coarse-Grained Soils (more than 50 % retained on the No. 200 (75-μm) sieve)

12.1 Class the soil as gravel if more than 50 % of the coarse fraction [plus No. 200 (75-μm) sieve] is retained on the No. 4 (4.75-mm) sieve.

12.2 Class the soil as sand if 50 % or more of the coarse fraction [plus No. 200 (75-μm) sieve] passes the No. 4 (4.75-mm) sieve.

12.3 If 12 % or less of the test specimen passes the No. 200 (75-μm) sieve, plot the cumulative particle-size distribution, Fig. 4, and compute the coefficient of uniformity, Cu, and coefficient of curvature, Cc, as given in Eqs 1 and 2.

$$Cu = D_{60}/D_{10} \quad (1)$$

$$Cc = (D_{30})^2/(D_{10} \times D_{60}) \quad (2)$$

where:

D_{10}, D_{30}, and D_{60} = the particle-size diameters corresponding to 10, 30, and 60 %, respectively, passing on the cumulative particle-size distribution curve, Fig. 4.

NOTE 8—It may be necessary to extrapolate the curve to obtain the D_{10} diameter.

12.3.1 If less than 5 % of the test specimen passes the No. 200 (75-μm) sieve, classify the soil as a *well-graded gravel*, GW, or *well-graded sand*, SW, if Cu is greater than 4.0 for gravel or greater than 6.0 for sand, and Cc is at least 1.0 but not more than 3.0.

12.3.2 If less than 5 % of the test specimen passes the No. 200 (75-μm) sieve, classify the soil as *poorly graded gravel*, GP, or *poorly graded sand*, SP, if either the Cu or the Cc criteria for well-graded soils are not satisfied.

12.4 If more than 12 % of the test specimen passes the No. 200 (75-μm) sieve, the soil shall be considered a coarse-grained soil with fines. The fines are determined to be either clayey or silty based on the plasticity index versus liquid limit plot on Fig. 3. (See 9.8.2.1 if insufficient material available for testing). (See NOTE 6)

12.4.1 Classify the soil as a *clayey gravel*, GC, or *clayey sand*, SC, if the fines are clayey, that is, the position of the plasticity index versus liquid limit plot, Fig. 3, falls on or above the "A" line and the plasticity index is greater than 7.

12.4.2 Classify the soil as a *silty gravel*, GM, or *silty sand*, SM, if the fines are silty, that is, the position of the plasticity index versus liquid limit plot, Fig. 3, falls below the "A" line or the plasticity index is less than 4.

12.4.3 If the fines plot as a silty clay, CL-ML, classify the soil as a *silty, clayey gravel*, GC-GM, if it is a gravel or a *silty, clayey sand*, SC-SM, if it is a sand.

12.5 If 5 to 12 % of the test specimen passes the No. 200 (75-μm) sieve, give the soil a dual classification using two group symbols.

12.5.1 The first group symbol shall correspond to that for a gravel or sand having less than 5 % fines (GW, GP, SW, SP), and the second symbol shall correspond to a gravel or sand having more than 12 % fines (GC, GM, SC, SM).

12.5.2 The group name shall correspond to the first group symbol plus "with clay" or "with silt" to indicate the plasticity characteristics of the fines. For example, well-graded gravel with clay, GW-GC; poorly graded sand with silt, SP-SM (See 9.8.2.1 if insufficient material available for testing).

NOTE 9—If the fines plot as a *silty clay*, CL-ML, the second group symbol should be either GC or SC. For example, a poorly graded sand with 10 % fines, a liquid limit of 20, and a plasticity index of 6 would be classified as a poorly graded sand with silty clay, SP-SC.

12.6 If the specimen is predominantly sand or gravel but contains 15 % or more of the other coarse-grained constituent, the words "with gravel" or "with sand" shall be added to the group name. For example, poorly graded gravel with sand, clayey sand with gravel.

12.7 If the field sample contained any cobbles or boulders or both, the words "with cobbles," or "with cobbles and boulders" shall be added to the group name. For example, silty gravel with cobbles, GM.

13. Report

13.1 The report should include the group name, group symbol, and the results of the laboratory tests. The particle-size distribution shall be given in terms of percent of gravel, sand, and fines. The plot of the cumulative particle-size distribution curve shall be reported if used in classifying the soil. Report appropriate descriptive information according to the procedures in Practice D 2488. A local or commercial name or geologic interpretation for the material may be added at the end of the descriptive information if identified as such. The test procedures used shall be referenced.

NOTE 10—*Example: Clayey Gravel with Sand and Cobbles* (GC)—46 % fine to coarse, hard, subrounded gravel; 30 % fine to coarse, hard, subrounded sand; 24 % clayey fines, LL = 38, PI = 19; weak reaction with HCl; original field sample had 4 % hard, subrounded cobbles; maximum dimension 150 mm.

In-Place Conditions—firm, homogeneous, dry, brown.

Geologic Interpretation—alluvial fan.

NOTE 11—Other examples of soil descriptions are given in Appendix X1.

14. Keywords

14.1 Atterberg limits; classification; clay; gradation; gravel; laboratory classification; organic soils; sand; silt; soil classification; soil tests

APPENDIXES

(Nonmandatory Information)

X1. EXAMPLES OF DESCRIPTIONS USING SOIL CLASSIFICATION

X1.1 The following examples show how the information required in 13.1 can be reported. The appropriate descriptive information from Practice D 2488 is included for illustrative purposes. The additional descriptive terms that would accompany the soil classification should be based on the intended use of the classification and the individual circumstances.

X1.1.1 *Well-Graded Gravel with Sand (GW)*—73 % fine to coarse, hard, subangular gravel; 23 % fine to coarse, hard, subangular sand; 4 % fines; Cc = 2.7, Cu = 12.4.

X1.1.2 *Silty Sand with Gravel (SM)*—61 % predominantly fine sand; 23 % silty fines, LL = 33, PI = 6; 16 % fine, hard, subrounded gravel; no reaction with HCl; (field sample smaller than recommended). *In-Place Conditions*—Firm, stratified and contains lenses of silt 1 to 2 in. thick, moist, brown to gray; in-place density = 106 lb/ft^3 and in-place moisture = 9 %.

X1.1.3 *Organic Clay (OL)*—100 % fines, LL (not dried) = 32, LL (oven dried) = 21, PI (not dried) = 10; wet, dark brown, organic odor, weak reaction with HCl.

X1.1.4 *Silty Sand with Organic Fines (SM)*—74 % fine to coarse, hard, subangular reddish sand; 26 % organic and silty dark-brown fines, LL (not dried) = 37, LL (oven dried) = 26, PI (not dried) = 6, wet, weak reaction with HCl.

X1.1.5 *Poorly Graded Gravel with Silt, Sand, Cobbles and Boulders (GP-GM)*—78 % fine to coarse, hard, subrounded to subangular gravel; 16 % fine to coarse, hard, subrounded to subangular sand; 6 % silty (estimated) fines; moist, brown; no reaction with HCl; original field sample had 7 % hard, subrounded cobbles and 2 % hard, subrounded boulders with a maximum dimension of 18 in.

X2. USING SOIL CLASSIFICATION AS A DESCRIPTIVE SYSTEM FOR SHALE, CLAYSTONE, SHELLS, SLAG, CRUSHED ROCK, ETC.

X2.1 The group names and symbols used in this standard may be used as a descriptive system applied to materials that exist in situ as shale, claystone, sandstone, siltstone, mudstone, etc., but convert to soils after field or laboratory processing (crushing, slaking, etc.).

X2.2 Materials such as shells, crushed rock, slag, etc., should be identified as such. However, the procedures used in this standard for describing the particle size and plasticity characteristics may be used in the description of the material. If desired, a classification in accordance with this standard may be assigned to aid in describing the material.

X2.3 If a classification is used, the group symbol(s) and group names should be placed in quotation marks or noted with some type of distinguishing symbol. See examples.

X2.4 Examples of how soil classifications could be incorporated into a description system for materials that are not naturally occurring soils are as follows:

X2.4.1 *Shale Chunks*—Retrieved as 2 to 4-in. pieces of shale from power auger hole, dry, brown, no reaction with HCl. After laboratory processing by slaking in water for 24 h, material classified as "Sandy Lean Clay (CL)"—61 % clayey fines, LL = 37, PI = 16; 33 % fine to medium sand; 6 % gravel-size pieces of shale.

X2.4.2 *Crushed Sandstone*—Product of commercial crushing operation; "Poorly Graded Sand with Silt (SP-SM)"—91 % fine to medium sand; 9 % silty (estimated) fines; dry, reddish-brown, strong reaction with HCl.

X2.4.3 *Broken Shells*—62 % gravel-size broken shells,

205

31 % sand and sand-size shell pieces; 7 % fines; would be classified as "Poorly Graded Gravel with Sand (GP)".

X2.4.4 *Crushed Rock*—Processed gravel and cobbles from Pit No. 7; "Poorly Graded Gravel (GP)"—89 % fine, hard, angular gravel-size particles; 11 % coarse, hard, angular sand-size particles, dry, tan; no reaction with HCl; Cc = 2.4, Cu = 0.9.

X3. PREPARATION AND TESTING FOR CLASSIFICATION PURPOSES BY THE WET METHOD

X3.1 This appendix describes the steps in preparing a soil sample for testing for purposes of soil classification using a wet-preparation procedure.

X3.2 Samples prepared in accordance with this procedure should contain as much of their natural water content as possible and every effort should be made during obtaining, preparing, and transportating the samples to maintain the natural moisture.

X3.3 The procedures to be followed in this standard assume that the field sample contains fines, sand, gravel, and plus 3-in. (75-mm) particles and the cumulative particle-size distribution plus the liquid limit and plasticity index values are required (see 9.8). Some of the following steps may be omitted when they are not applicable to the soil being tested.

X3.4 If the soil contains plus No. 200 (75-µm) particles that would degrade during dry sieving, use a test procedure for determining the particle-size characteristics that prevents this degradation.

X3.5 Since this classification system is limited to the portion of a sample passing the 3-in. (75-mm) sieve, the plus 3-in. (75-mm) material shall be removed prior to the determination of the particle-size characteristics and the liquid limit and plasticity index.

X3.6 The portion of the field sample finer than the 3-in. (75-mm) sieve shall be obtained as follows:

X3.6.1 Separate the field sample into two fractions on a 3-in. (75-mm) sieve, being careful to maintain the natural water content in the minus 3-in. (75-mm) fraction. Any particles adhering to the plus 3-in. (75-mm) particles shall be brushed or wiped off and placed in the fraction passing the 3-in. (75-mm) sieve.

X3.6.2 Determine the air-dry or oven-dry weight of the fraction retained on the 3-in. (75-mm) sieve. Determine the total (wet) weight of the fraction passing the 3-in. (75-mm) sieve.

X3.6.3 Thoroughly mix the fraction passing the 3-in. (75-mm) sieve. Determine the water content, in accordance with Test Method D 2216, of a representative specimen with a minimum dry weight as required in 7.2. Save the water-content specimen for determination of the particle-size analysis in accordance with X3.8.

X3.6.4 Compute the dry weight of the fraction passing the 3-in. (75-mm) sieve based on the water content and total (wet) weight. Compute the total dry weight of the sample and calculate the percentage of material retained on the 3-in. (75-mm) sieve.

X3.7 Determine the liquid limit and plasticity index as follows:

X3.7.1 If the soil disaggregates readily, mix on a clean, hard surface and select a representative sample by quartering in accordance with Practice C 702.

X3.7.1.1 If the soil contains coarse-grained particles coated with and bound together by tough clayey material, take extreme care in obtaining a representative portion of the No. 40 (425-µm) fraction. Typically, a larger portion than normal has to be selected, such as the minimum weights required in 7.2.

X3.7.1.2 To obtain a representative specimen of a basically cohesive soil, it may be advantageous to pass the soil through a ¾-in. (19-mm) sieve or other convenient size so the material can be more easily mixed and then quartered or split to obtain the representative specimen.

X3.7.2 Process the representative specimen in accordance with Procedure B of Practice D 2217.

X3.7.3 Perform the liquid-limit test in accordance with Test Method D 4318, except the soil shall not be air dried prior to the test.

X3.7.4 Perform the plastic-limit test in accordance with Test Method D 4318, except the soil shall not be air dried prior to the test, and calculate the plasticity index.

X3.8 Determine the particle-size distribution as follows:

X3.8.1 If the water content of the fraction passing the 3-in. (75-mm) sieve was required (X3.6.3), use the water-content specimen for determining the particle-size distribution. Otherwise, select a representative specimen in accordance with Practice C 702 with a minimum dry weight as required in 7.2.

X3.8.2 If the cumulative particle-size distribution including a hydrometer analysis is required, determine the particle-size distribution in accordance with Test Method D 422. See 9.7 for the set of required sieves.

X3.8.3 If the cumulative particle-size distribution without a hydrometer analysis is required, determine the particle-size distribution in accordance with Method C 136. See 9.7 for the set of required sieves. The specimen should be soaked until all clayey aggregations have softened and then washed in accordance with Test Method C 117 prior to performing the particle-size distribution.

X3.8.4 If the cumulative particle-size distribution is not required, determine the percent fines, percent sand, and percent gravel in the specimen in accordance with Test Method C 117, being sure to soak the specimen long enough to soften all clayey aggregations, followed by Method C 136 using a nest of sieves which shall include a No. 4 (4.75-mm) sieve and a No. 200 (75-µm) sieve.

X3.8.5 Calculate the percent fines, percent sand, and percent gravel in the minus 3-in. (75-mm) fraction for classification purposes.

X4. AIR-DRIED METHOD OF PREPARATION OF SOILS FOR TESTING FOR CLASSIFICATION PURPOSES

X4.1 This appendix describes the steps in preparing a soil sample for testing for purposes of soil classification when air-drying the soil before testing is specified or desired or when the natural moisture content is near that of an air-dried state.

X4.2 If the soil contains organic matter or mineral colloids that are irreversibly affected by air drying, the wet-preparation method as described in Appendix X3 should be used.

X4.3 Since this classification system is limited to the portion of a sample passing the 3-in. (75-mm) sieve, the plus 3-in. (75-mm) material shall be removed prior to the determination of the particle-size characteristics and the liquid limit and plasticity index.

X4.4 The portion of the field sample finer than the 3-in. (75-mm) sieve shall be obtained as follows:

X4.4.1 Air dry and weigh the field sample.

X4.4.2 Separate the field sample into two fractions on a 3-in. (75-mm) sieve.

X4.4.3 Weigh the two fractions and compute the percentage of the plus 3-in. (75-mm) material in the field sample.

X4.5 Determine the particle-size distribution and liquid limit and plasticity index as follows (see 9.8 for when these tests are required):

X4.5.1 Thoroughly mix the fraction passing the 3-in. (75-mm) sieve.

X4.5.2 If the cumulative particle-size distribution including a hydrometer analysis is required, determine the particle-size distribution in accordance with Test Method D 422. See 9.7 for the set of sieves that is required.

X4.5.3 If the cumulative particle-size distribution without a hydrometer analysis is required, determine the particle-size distribution in accordance with Test Method D 1140 followed by Method C 136. See 9.7 for the set of sieves that is required.

X4.5.4 If the cumulative particle-size distribution is not required, determine the percent fines, percent sand, and percent gravel in the specimen in accordance with Test Method D 1140 followed by Method C 136 using a nest of sieves which shall include a No. 4 (4.75-mm) sieve and a No. 200 (75-μm) sieve.

X4.5.5 If required, determine the liquid limit and the plasticity index of the test specimen in accordance with Test Method D 4318.

X5. RATIONALE

X5.1 Significant revisions were made to the standard which appeared as D 2487 – 83 from the previous version of D 2487 – 69 (1975). The changes are documented in the literature.[5]

X5.2 The 1992 edition differs from the previous edition in that the title was changed to better indicate the use of the standard and identifying it as the ASTM version of the Unified Soil Classification System.

[5] Howard, A.K., "The Revised ASTM Standard on the Unified Soil Classification System," Geotechnical Testing Journal, GTJODJ Vol 7, No. 4, December 1984.

207

The American Society for Testing and Materials takes no position respecting the validity of any patent rights asserted in connection with any item mentioned in this standard. Users of this standard are expressly advised that determination of the validity of any such patent rights, and the risk of infringement of such rights, are entirely their own responsibility.

This standard is subject to revision at any time by the responsible technical committee and must be reviewed every five years and if not revised, either reapproved or withdrawn. Your comments are invited either for revision of this standard or for additional standards and should be addressed to ASTM Headquarters. Your comments will receive careful consideration at a meeting of the responsible technical committee, which you may attend. If you feel that your comments have not received a fair hearing you should make your views known to the ASTM Committee on Standards, 1916 Race St., Philadelphia, PA 19103.

Designation: D 2488 – 90

Standard Practice for Description and Identification of Soils (Visual-Manual Procedure)[1]

This standard is issued under the fixed designation D 2488; the number immediately following the designation indicates the year of original adoption or, in the case of revision, the year of last revision. A number in parentheses indicates the year of last reapproval. A superscript epsilon (ε) indicates an editorial change since the last revision or reapproval.

This standard has been approved for use by agencies of the Department of Defense. Consult the DoD Index of Specifications and Standards for the specific year of issue which has been adopted by the Department of Defense.

1. Scope

1.1 This practice covers procedures for the description of soils for engineering purposes.

1.2 This practice also describes a procedure for identifying soils, at the option of the user, based on the classification system described in Test Method D 2487. The identification is based on visual examination and manual tests. It must be clearly stated in reporting an identification that it is based on visual-manual procedures.

1.2.1 When precise classification of soils for engineering purposes is required, the procedures prescribed in Test Method D 2487 shall be used.

1.2.2 In this practice, the identification portion assigning a group symbol and name is limited to soil particles smaller than 3 in. (75 mm).

1.2.3 The identification portion of this practice is limited to naturally occurring soils (disturbed and undisturbed).

NOTE 1—This practice may be used as a descriptive system applied to such materials as shale, claystone, shells, crushed rock, etc. (See Appendix X2).

1.3 The descriptive information in this practice may be used with other soil classification systems or for materials other than naturally occurring soils.

1.4 *This standard does not purport to address all of the safety problems, if any, associated with its use. It is the responsibility of the user of this standard to establish appropriate safety and health practices and determine the applicability of regulatory limitations prior to use.* For specific precautionary statements see Section 8.

1.5 The values stated in inch-pound units are to be regarded as the standard.

2. Referenced Documents

2.1 *ASTM Standards:*

D 653 Terminology Relating to Soil, Rock, and Contained Fluids[2]

D 1452 Practice for Soil Investigation and Sampling by Auger Borings[2]

D 1586 Method for Penetration Test and Split-Barrel Sampling of Soils[2]

D 1587 Practice for Thin-Walled Tube Sampling of Soils[2]

D 2113 Practice for Diamond Core Drilling for Site Investigation[2]

D 2487 Test Method for Classification of Soils for Engineering Purposes[2]

D 4083 Practice for Description of Frozen Soils (Visual-Manual Procedure)[2]

3. Terminology

3.1 *Definitions:*

3.1.1 Except as listed below, all definitions are in accordance with Terminology D 653.

NOTE 2—For particles retained on a 3-in. (75-mm) US standard sieve, the following definitions are suggested:

Cobbles—particles of rock that will pass a 12-in. (300-mm) square opening and be retained on a 3-in. (75-mm) sieve, and

Boulders—particles of rock that will not pass a 12-in. (300-mm) square opening.

3.1.1.2 *clay*—soil passing a No. 200 (75-μm) sieve that can be made to exhibit plasticity (putty-like properties) within a range of water contents, and that exhibits considerable strength when air-dry. For classification, a clay is a fine-grained soil, or the fine-grained portion of a soil, with a plasticity index equal to or greater than 4, and the plot of plasticity index versus liquid limit falls on or above the "A" line (see Fig. 3 of Test Method D 2487).

3.1.1.3 *gravel*—particles of rock that will pass a 3-in. (75-mm) sieve and be retained on a No. 4 (4.75-mm) sieve with the following subdivisions:

coarse—passes a 3-in. (75-mm) sieve and is retained on a ¾-in. (19-mm) sieve.

fine—passes a ¾-in. (19-mm) sieve and is retained on a No. 4 (4.75-mm) sieve.

3.1.1.4 *organic clay*—a clay with sufficient organic content to influence the soil properties. For classification, an organic clay is a soil that would be classified as a clay, except that its liquid limit value after oven drying is less than 75 % of its liquid limit value before oven drying.

3.1.1.5 *organic silt*—a silt with sufficient organic content to influence the soil properties. For classification, an organic silt is a soil that would be classified as a silt except that its liquid limit value after oven drying is less than 75 % of its liquid limit value before oven drying.

3.1.1.6 *peat*—a soil composed primarily of vegetable tissue in various stages of decomposition usually with an organic odor, a dark brown to black color, a spongy consistency, and a texture ranging from fibrous to amorphous.

3.1.1.7 *sand*—particles of rock that will pass a No. 4

[1] This practice is under the jurisdiction of ASTM Committee D-18 on Soil and Rock and is the direct responsibility of Subcommittee D18.07 on Identification and Classification of Soils.

Current edition approved June 29, 1990. Published August 1990. Originally published as D 2488 – 66 T. Last previous edition D 2488 – 84[ε1].

[2] *Annual Book of ASTM Standards*, Vol 04.08.

209

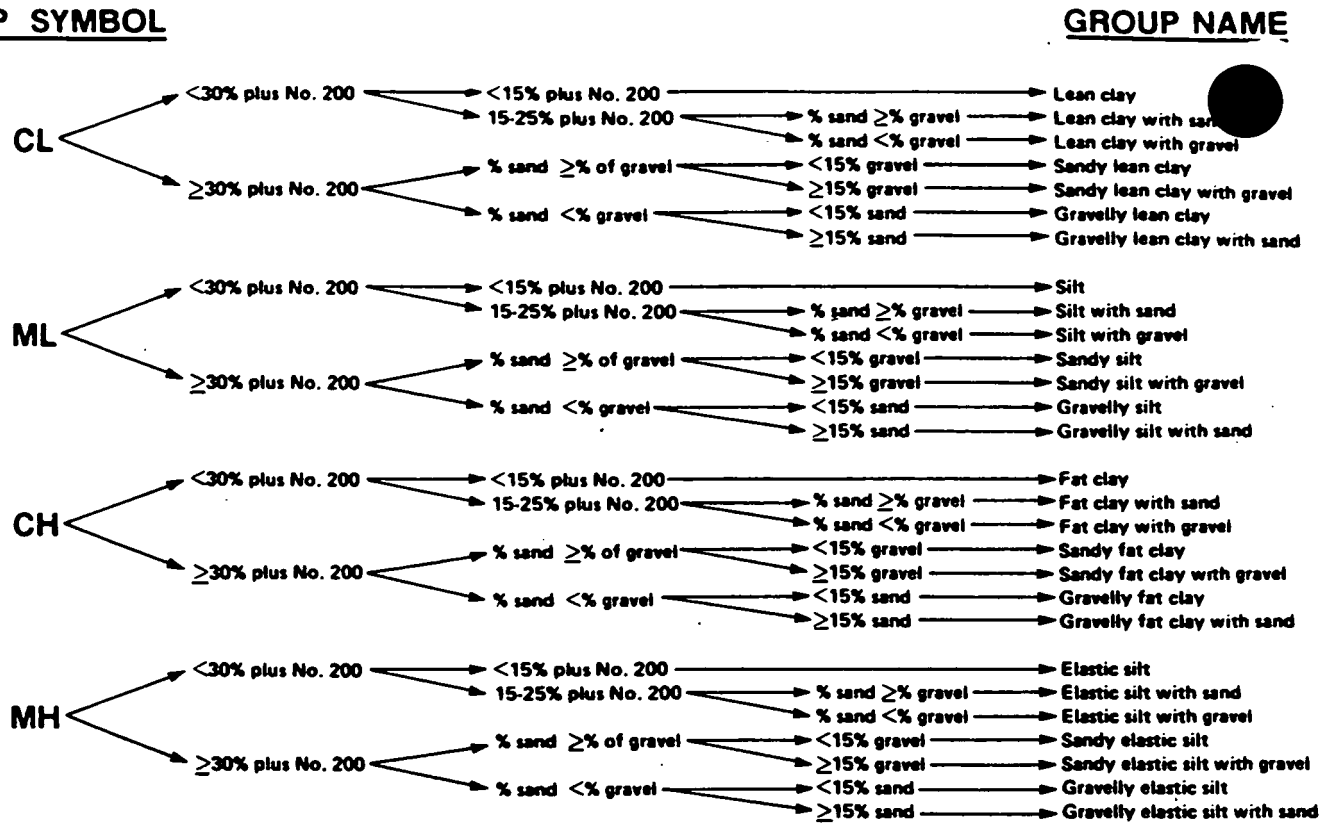

NOTE—Percentages are based on estimating amounts of fines, sand, and gravel to the nearest 5 %.

FIG. 1a Flow Chart for Identifying Inorganic Fine-Grained Soil (50 % or more fines)

(4.75-mm) sieve and be retained on a No. 200 (75-μm) sieve with the following subdivisions:

coarse—passes a No. 4 (4.75-mm) sieve and is retained on a No. 10 (2.00-mm) sieve.

medium—passes a No. 10 (2.00-mm) sieve and is retained on a No. 40 (425-μm) sieve.

fine—passes a No. 40 (425-μm) sieve and is retained on a No. 200 (75-μm) sieve.

3.1.1.8 *silt*—soil passing a No. 200 (75-μm) sieve that is nonplastic or very slightly plastic and that exhibits little or no strength when air dry. For classification, a silt is a fine-grained soil, or the fine-grained portion of a soil, with a plasticity index less than 4, or the plot of plasticity index versus liquid limit falls below the "A" line (see Fig. 3 of Test Method D 2487).

4. Summary of Practice

4.1 Using visual examination and simple manual tests, this practice gives standardized criteria and procedures for describing and identifying soils.

4.2 The soil can be given an identification by assigning a group symbol(s) and name. The flow charts, Figs. 1a and 1b for fine-grained soils, and Fig. 2, for coarse-grained soils, can be used to assign the appropriate group symbol(s) and name. If the soil has properties which do not distinctly place it into a specific group, borderline symbols may be used, see Appendix X3.

NOTE 3—It is suggested that a distinction be made between *dual symbols* and *borderline symbols*.

Dual Symbol—A dual symbol is two symbols separated by a hyphen, for example, GP-GM, SW-SC, CL-ML used to indicate that the soil has been identified as having the properties of a classification in accordance with Test Method D 2487 where two symbols are required. Two symbols are required when the soil has between 5 and 12 % fines or

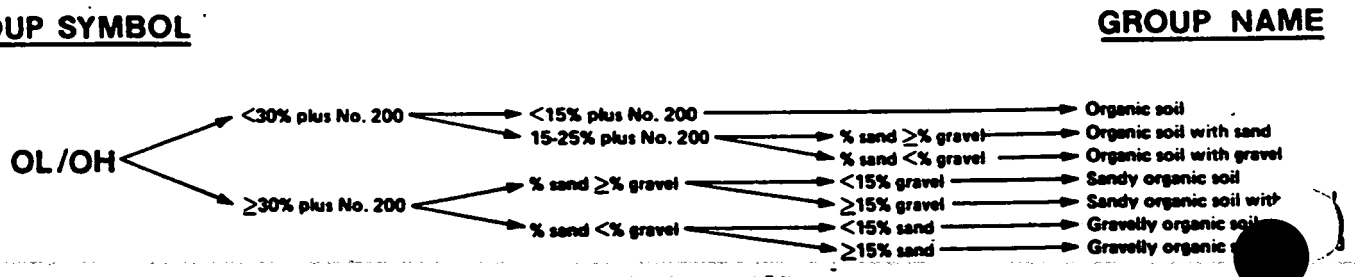

NOTE—Percentages are based on estimating amounts of fines, sand, and gravel to the nearest 5 %.

FIG. 1b Flow Chart for Identifying Organic Fine-Grained Soil (50 % or more fines)

210

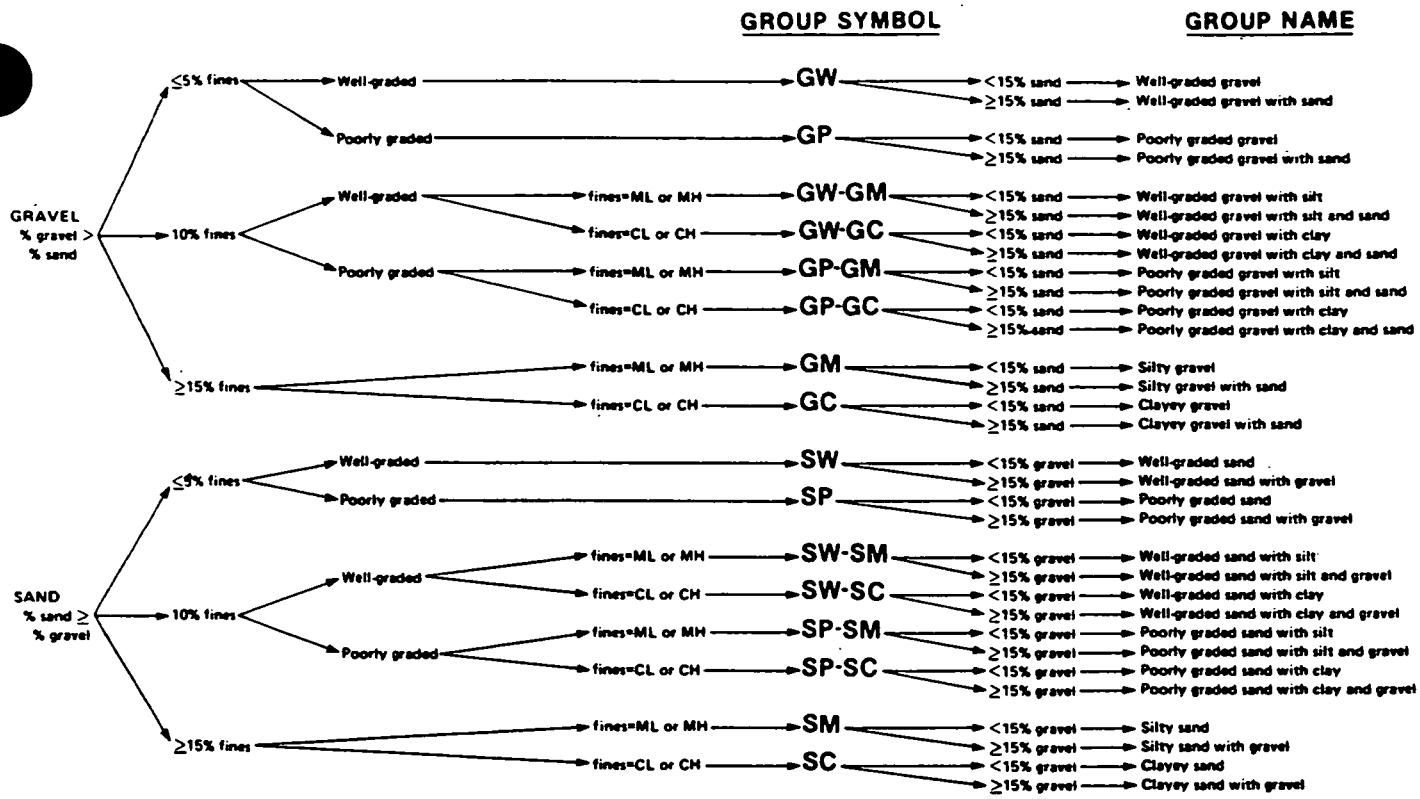

NOTE—Percentages are based on estimating amounts of fines, sand, and gravel to the nearest 5 %.

FIG. 2 Flow Chart for Identifying Coarse-Grained Soils (less than 50 % fines)

when the liquid limit and plasticity index values plot in the CL-ML area of the plasticity chart.

Borderline Symbol—A borderline symbol is two symbols separated by a slash, for example, CL/CH, GM/SM, CL/ML. A borderline symbol should be used to indicate that the soil has been identified as having properties that do not distinctly place the soil into a specific group (see Appendix X3).

5. Significance and Use

5.1 The descriptive information required in this practice can be used to describe a soil to aid in the evaluation of its significant properties for engineering use.

5.2 The descriptive information required in this practice should be used to supplement the classification of a soil as determined by Test Method D 2487.

5.3 This practice may be used in identifying soils using the classification group symbols and names as prescribed in Test Method D 2487. Since the names and symbols used in this practice to identify the soils are the same as those used in Test Method D 2487, it shall be clearly stated in reports and all other appropriate documents, that the classification symbol and name are based on visual-manual procedures.

5.4 This practice is to be used not only for identification of soils in the field, but also in the office, laboratory, or wherever soil samples are inspected and described.

5.5 This practice has particular value in grouping similar soil samples so that only a minimum number of laboratory tests need be run for positive soil classification.

NOTE 4—The ability to describe and identify soils correctly is learned more readily under the guidance of experienced personnel, but it may also be acquired systematically by comparing numerical laboratory test results for typical soils of each type with their visual and manual characteristics.

5.6 When describing and identifying soil samples from a given boring, test pit, or group of borings or pits, it is not necessary to follow all of the procedures in this practice for every sample. Soils which appear to be similar can be grouped together; one sample completely described and identified with the others referred to as similar based on performing only a few of the descriptive and identification procedures described in this practice.

5.7 This practice may be used in combination with Practice D 4083 when working with frozen soils.

6. Apparatus

6.1 *Required Apparatus:*

6.1.1 *Pocket Knife or Small Spatula.*

6.2 *Useful Auxiliary Apparatus:*

6.2.1 *Small Test Tube and Stopper* (or jar with a lid).

6.2.2 *Small Hand Lens.*

7. Reagents

7.1 *Purity of Water*—Unless otherwise indicated, references to water shall be understood to mean water from a city water supply or natural source, including non-potable water.

7.2 *Hydrochloric Acid*—A small bottle of dilute hydrochloric acid, HCl, one part HCl (10 *N*) to three parts water (This reagent is optional for use with this practice). See Section 8.

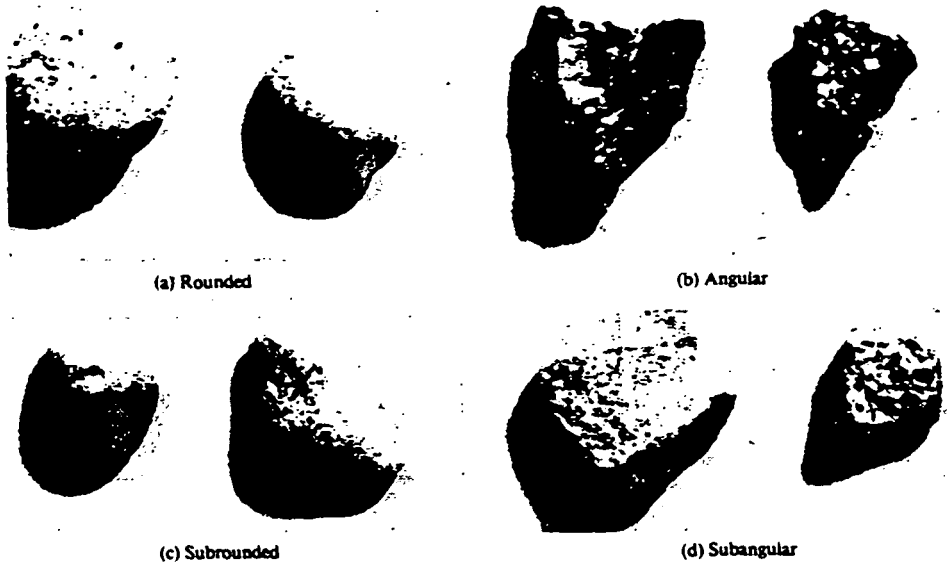

FIG. 3 Typical Angularity of Bulky Grains

8. Safety Precautions

8.1 When preparing the dilute HCl solution of one part concentrated hydrochloric acid (10 *N*) to three parts of distilled water, slowly add acid into water following necessary safety precautions. Handle with caution and store safely. If solution comes into contact with the skin, rinse thoroughly with water.

8.2 **Caution**—Do not add water to acid.

9. Sampling

9.1 The sample shall be considered to be representative of the stratum from which it was obtained by an appropriate, accepted, or standard procedure.

NOTE 5—Preferably, the sampling procedure should be identified as having been conducted in accordance with Practices D 1452, D 1587, or D 2113, or Method D 1586.

9.2 The sample shall be carefully identified as to origin.

NOTE 6—Remarks as to the origin may take the form of a boring number and sample number in conjunction with a job number, a geologic stratum, a pedologic horizon or a location description with respect to a permanent monument, a grid system or a station number and offset with respect to a stated centerline and a depth or elevation.

9.3 For accurate description and identification, the minimum amount of the specimen to be examined shall be in accordance with the following schedule:

Maximum Particle Size, Sieve Opening	Minimum Specimen Size, Dry Weight
4.75 mm (No. 4)	100 g (0..5 lb)
9.5 mm (⅜ in.)	200 g (0.5 lb)
19.0 mm (¾ in.)	1.0 kg (2.2 lb)
38.1 mm (1½ in.)	8.0 kg (18 lb)
75.0 mm (3 in.)	60.0 kg (132 lb)

NOTE 7—If random isolated particles are encountered that are significantly larger than the particles in the soil matrix, the soil matrix can be accurately described and identified in accordance with the preceeding schedule.

9.4 If the field sample or specimen being examined is smaller than the minimum recommended amount, the report shall include an appropriate remark.

TABLE 1 Criteria for Describing Angularity of Coarse-Grained Particles (see Fig. 3)

Description	Criteria
Angular	Particles have sharp edges and relatively plane sides with unpolished surfaces
Subangular	Particles are similar to angular description but have rounded edges
Subrounded	Particles have nearly plane sides but have well-rounded corners and edges
Rounded	Particles have smoothly curved sides and no edges

10. Descriptive Information for Soils

10.1 *Angularity*—Describe the angularity of the sand (coarse sizes only), gravel, cobbles, and boulders, as angular, subangular, subrounded, or rounded in accordance with the criteria in Table 1 and Fig. 3. A range of angularity may be stated, such as: subrounded to rounded.

10.2 *Shape*—Describe the shape of the gravel, cobbles, and boulders as flat, elongated, or flat and elongated if they meet the criteria in Table 2 and Fig. 4. Otherwise, do not mention the shape. Indicate the fraction of the particles that have the shape, such as: one-third of the gravel particles are flat.

10.3 *Color*—Describe the color. Color is an important property in identifying organic soils, and within a given

TABLE 2 Criteria for Describing Particle Shape (see Fig. 4)

The particle shape shall be described as follows where length, width, and thickness refer to the greatest, intermediate, and least dimensions of a r respectively.

Flat	Particles with width/thickness > 3
Elongated	Particles with length/width > 3
Flat and elongated	Particles meet criteria for both flat and elongated

212

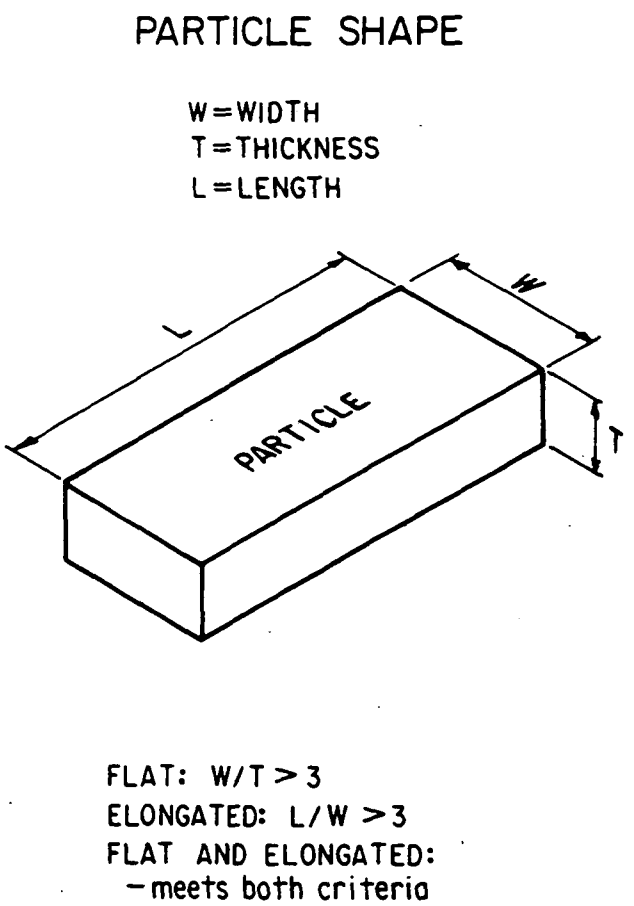

FIG. 4 Criteria for Particle Shape

TABLE 3 Criteria for Describing Moisture Condition

Description	Criteria
Dry	Absence of moisture, dusty, dry to the touch
Moist	Damp but no visible water
Wet	Visible free water, usually soil is below water table

locality it may also be useful in identifying materials of similar geologic origin. If the sample contains layers or patches of varying colors, this shall be noted and all representative colors shall be described. The color shall be described for moist samples. If the color represents a dry condition, this shall be stated in the report.

10.4 *Odor*—Describe the odor if organic or unusual. Soils containing a significant amount of organic material usually have a distinctive odor of decaying vegetation. This is especially apparent in fresh samples, but if the samples are dried, the odor may often be revived by heating a moistened sample. If the odor is unusual (petroleum product, chemical, and the like), it shall be described.

10.5 *Moisture Condition*—Describe the moisture condition as dry, moist, or wet, in accordance with the criteria in Table 3.

10.6 *HCl Reaction*—Describe the reaction with HCl as none, weak, or strong, in accordance with the critera in Table 4. Since calcium carbonate is a common cementing agent, a report of its presence on the basis of the reaction with dilute hydrochloric acid is important.

TABLE 4 Criteria for Describing the Reaction With HCl

Description	Criteria
None	No visible reaction
Weak	Some reaction, with bubbles forming slowly
Strong	Violent reaction, with bubbles forming immediately

TABLE 5 Criteria for Describing Consistency

Description	Criteria
Very soft	Thumb will penetrate soil more than 1 in. (25 mm)
Soft	Thumb will penetrate soil about 1 in. (25 mm)
Firm	Thumb will indent soil about ¼ in. (6 mm)
Hard	Thumb will not indent soil but readily indented with thumbnail
Very hard	Thumbnail will not indent soil

10.7 *Consistency*—For intact fine-grained soil, describe the consistency as very soft, soft, firm, hard, or very hard, in accordance with the criteria in Table 5. This observation is inappropriate for soils with significant amounts of gravel.

10.8 *Cementation*—Describe the cementation of intact coarse-grained soils as weak, moderate, or strong, in accordance with the criteria in Table 6.

10.9 *Structure*—Describe the structure of intact soils in accordance with the criteria in Table 7.

10.10 *Range of Particle Sizes*—For gravel and sand components, describe the range of particle sizes within each component as defined in 3.1.2 and 3.1.6. For example, about 20 % fine to coarse gravel, about 40 % fine to coarse sand.

10.11 *Maximum Particle Size*—Describe the maximum particle size found in the sample in accordance with the following information:

10.11.1 *Sand Size*—If the maximum particle size is a sand size, describe as fine, medium, or coarse as defined in 3.1.6. For example: maximum particle size, medium sand.

10.11.2 *Gravel Size*—If the maximum particle size is a gravel size, describe the maximum particle size as the smallest sieve opening that the particle will pass. For example, maximum particle size, 1½ in. (will pass a 1½-in. square opening but not a ¾-in. square opening).

10.11.3 *Cobble or Boulder Size*—If the maximum particle size is a cobble or boulder size, describe the maximum dimension of the largest particle. For example: maximum dimension, 18 in. (450 mm).

10.12 *Hardness*—Describe the hardness of coarse sand and larger particles as hard, or state what happens when the particles are hit by a hammer, for example, gravel-size particles fracture with considerable hammer blow, some gravel-size particles crumble with hammer blow. "Hard" means particles do not crack, fracture, or crumble under a hammer blow.

10.13 Additional comments shall be noted, such as the presence of roots or root holes, difficulty in drilling or augering hole, caving of trench or hole, or the presence of mica.

10.14 A local or commercial name or a geologic interpre-

TABLE 6 Criteria for Describing Cementation

Description	Criteria
Weak	Crumbles or breaks with handling or little finger pressure
Moderate	Crumbles or breaks with considerable finger pressure
Strong	Will not crumble or break with finger pressure

TABLE 7 Criteria for Describing Structure

Description	Criteria
Stratified	Alternating layers of varying material or color with layers at least 6 mm thick; note thickness
Laminated	Alternating layers of varying material or color with the layers less than 6 mm thick; note thickness
Fissured	Breaks along definite planes of fracture with little resistance to fracturing
Slickensided	Fracture planes appear polished or glossy, sometimes striated
Blocky	Cohesive soil that can be broken down into small angular lumps which resist further breakdown
Lensed	Inclusion of small pockets of different soils, such as small lenses of sand scattered through a mass of clay; note thickness
Homogeneous	Same color and appearance throughout

tation of the soil, or both, may be added if identified as such.

10.15 A classification or identification of the soil in accordance with other classification systems may be added if identified as such.

11. Identification of Peat

11.1 A sample composed primarily of vegetable tissue in various stages of decomposition that has a fibrous to amorphous texture, usually a dark brown to black color, and an organic odor, shall be designated as a highly organic soil and shall be identified as peat, PT, and not subjected to the identification procedures described hereafter.

12. Preparation for Identification

12.1 The soil identification portion of this practice is based on the portion of the soil sample that will pass a 3-in. (75-mm) sieve. The larger than 3-in. (75-mm) particles must be removed, manually, for a loose sample, or mentally, for an intact sample before classifying the soil.

12.2 Estimate and note the percentage of cobbles and the percentage of boulders. Performed visually, these estimates will be on the basis of volume percentage.

NOTE 8—Since the percentages of the particle-size distribution in Test Method D 2487 are by dry weight, and the estimates of percentages for gravel, sand, and fines in this practice are by dry weight, it is recommended that the report state that the percentages of cobbles and boulders are by volume.

12.3 Of the fraction of the soil smaller than 3 in. (75 mm), estimate and note the percentage, by dry weight, of the gravel, sand, and fines (see Appendix X4 for suggested procedures).

NOTE 9—Since the particle-size components appear visually on the basis of volume, considerable experience is required to estimate the percentages on the basis of dry weight. Frequent comparisons with laboratory particle-size analyses should be made.

12.3.1 The percentages shall be estimated to the closest 5 %. The percentages of gravel, sand, and fines must add up to 100 %.

12.3.2 If one of the components is present but not in sufficient quantity to be considered 5 % of the smaller than 3-in. (75-mm) portion, indicate its presence by the term *trace*, for example, trace of fines. A trace is not to be considered in the total of 100 % for the components.

13. Preliminary Identification

13.1 The soil is *fine grained* if it contains 50 % or more fines. Follow the procedures for identifying fine-grained soils of Section 14.

13.2 The soil is *coarse grained* if it contains less than 50 % fines. Follow the procedures for identifying coarse-grained soils of Section 15.

14. Procedure for Identifying Fine-Grained Soils

14.1 Select a representative sample of the material for examination. Remove particles larger than the No. 40 sieve (medium sand and larger) until a specimen equivalent to about a handful of material is available. Use this specimen for performing the dry strength, dilatancy, and toughness tests.

14.2 *Dry Strength:*

14.2.1 From the specimen, select enough material to mold into a ball about 1 in. (25 mm) in diameter. Mold the material until it has the consistency of putty, adding water if necessary.

14.2.2 From the molded material, make at least three test specimens. A test specimen shall be a ball of material about ½ in. (12 mm) in diameter. Allow the test specimens to dry in air, or sun, or by artificial means, as long as the temperature does not exceed 60°C.

14.2.3 If the test specimen contains natural dry lumps, those that are about ½ in. (12 mm) in diameter may be used in place of the molded balls.

NOTE 10—The process of molding and drying usually produces higher strengths than are found in natural dry lumps of soil.

14.2.4 Test the strength of the dry balls or lumps by crushing between the fingers. Note the strength as none, low, medium, high, or very high in accorance with the criteria in Table 8. If natural dry lumps are used, do not use the results of any of the lumps that are found to contain particles of coarse sand.

14.2.5 The presence of high-strength water-soluble cementing materials, such as calcium carbonate, may cause exceptionally high dry strengths. The presence of calcium carbonate can usually be detected from the intensity of the reaction with dilute hydrochloric acid (see 10.6).

14.3 *Dilatancy:*

14.3.1 From the specimen, select enough material to mold into a ball about ½ in. (12 mm) in diameter. Mold the material, adding water if necessary, until it has a soft, but not sticky, consistency.

14.3.2 Smooth the soil ball in the palm of one hand with the blade of a knife or small spatula. Shake horizontally, striking the side of the hand vigorously against the other hand several times. Note the reaction of water appearing on

TABLE 8 Criteria for Describing Dry Strength

Description	Criteria
None	The dry specimen crumbles into powder with mere pressure of handling
Low	The dry specimen crumbles into powder with some finger pressure
Medium	The dry specimen breaks into pieces or crumbles with considerable finger pressure
High	The dry specimen cannot be broken with finger pressure. Specimen will break into pieces between thumb and a hard surface
Very high	The dry specimen cannot be broken between the thumb and a hard surface

214

TABLE 9 Criteria for Describing Dilatancy

Description	Criteria
None	No visible change in the specimen
Slow	Water appears slowly on the surface of the specimen during shaking and does not disappear or disappears slowly upon squeezing
Rapid	Water appears quickly on the surface of the specimen during shaking and disappears quickly upon squeezing

TABLE 10 Criteria for Describing Toughness

Description	Criteria
Low	Only slight pressure is required to roll the thread near the plastic limit. The thread and the lump are weak and soft
Medium	Medium pressure is required to roll the thread to near the plastic limit. The thread and the lump have medium stiffness
High	Considerable pressure is required to roll the thread to near the plastic limit. The thread and the lump have very high stiffness

the surface of the soil. Squeeze the sample by closing the hand or pinching the soil between the fingers, and note the reaction as none, slow, or rapid in accordance with the criteria in Table 9. The reaction is the speed with which water appears while shaking, and disappears while squeezing.

14.4 *Toughness:*

14.4.1 Following the completion of the dilatancy test, the test specimen is shaped into an elongated pat and rolled by hand on a smooth surface or between the palms into a thread about ⅛ in. (3 mm) in diameter. (If the sample is too wet to roll easily, it should be spread into a thin layer and allowed to lose some water by evaporation.) Fold the sample threads and reroll repeatedly until the thread crumbles at a diameter of about ⅛ in. The thread will crumble at a diameter of ⅛ in. when the soil is near the plastic limit. Note the pressure required to roll the thread near the plastic limit. Also, note the strength of the thread. After the thread crumbles, the pieces should be lumped together and kneaded until the lump crumbles. Note the toughness of the material during kneading.

14.4.2 Describe the toughness of the thread and lump as low, medium, or high in accordance with the criteria in Table 10.

14.5 *Plasticity*—On the basis of observations made during the toughness test, describe the plasticity of the material in accordance with the criteria given in Table 11.

14.6 Decide whether the soil is an *inorganic* or an *organic* fine-grained soil (see 14.8). If inorganic, follow the steps given in 14.7.

14.7 *Identification of Inorganic Fine-Grained Soils:*

TABLE 11 Criteria for Describing Plasticity

Description	Criteria
Nonplastic	A ⅛-in. (3-mm) thread cannot be rolled at any water content
Low	The thread can barely be rolled and the lump cannot be formed when drier than the plastic limit
Medium	The thread is easy to roll and not much time is required to reach the plastic limit. The thread cannot be rerolled after reaching the plastic limit. The lump crumbles when drier than the plastic limit
High	It takes considerable time rolling and kneading to reach the plastic limit. The thread can be rerolled several times after reaching the plastic limit. The lump can be formed without crumbling when drier than the plastic limit

14.7.1 Identify the soil as a *lean clay*, CL, if the soil has medium to high dry strength, no or slow dilatancy, and medium toughness and plasticity (see Table 12).

14.7.2 Identify the soil as a *fat clay*, CH, if the soil has high to very high dry strength, no dilatancy, and high toughness and plasticity (see Table 12).

14.7.3 Identify the soil as a *silt*, ML, if the soil has no to low dry strength, slow to rapid dilatancy, and low toughness and plasticity, or is nonplastic (see Table 12).

14.7.4 Identify the soil as an *elastic silt*, MH, if the soil has low to medium dry strength, no to slow dilatancy, and low to medium toughness and plasticity (see Table 12).

NOTE 11—These properties are similar to those for a lean clay. However, the silt will dry quickly on the hand and have a smooth, silky feel when dry. Some soils that would classify as MH in accordance with the criteria in Test Method D 2487 are visually difficult to distinguish from lean clays, CL. It may be necessary to perform laboratory testing for proper identification.

14.8 *Identification of Organic Fine-Grained Soils:*

14.8.1 Identify the soil as an *organic soil*, OL/OH, if the soil contains enough organic particles to influence the soil properties. Organic soils usually have a dark brown to black color and may have an organic odor. Often, organic soils will change color, for example, black to brown, when exposed to the air. Some organic soils will lighten in color significantly when air dried. Organic soils normally will not have a high toughness or plasticity. The thread for the toughness test will be spongy.

NOTE 12—In some cases, through practice and experience, it may be possible to further identify the organic soils as organic silts or organic clays, OL or OH. Correlations between the dilatancy, dry strength, toughness tests, and laboratory tests can be made to identify organic soils in certain deposits of similar materials of known geologic origin.

14.9 If the soil is estimated to have 15 to 25 % sand or gravel, or both, the words "with sand" or "with gravel" (whichever is more predominant) shall be added to the group name. For example: "lean clay with sand, CL" or "silt with gravel, ML" (see Figs. 1a and 1b). If the percentage of sand is equal to the percentage of gravel, use "with sand."

14.10 If the soil is estimated to have 30 % or more sand or gravel, or both, the words "sandy" or "gravelly" shall be added to the group name. Add the word "sandy" if there appears to be more sand than gravel. Add the word "gravelly" if there appears to be more gravel than sand. For example: "sandy lean clay, CL", "gravelly fat clay, CH", or "sandy silt, ML" (see Figs. 1a and 1b). If the percentage of sand is equal to the percent of gravel, use "sandy."

15. Procedure for Identifying Coarse-Grained Soils (Contains less than 50 % fines)

15.1 The soil is a *gravel* if the percentage of gravel is estimated to be more than the percentage of sand.

TABLE 12 Identification of Inorganic Fine-Grained Soils from Manual Tests

Soil Symbol	Dry Strength	Dilatancy	Toughness
ML	None to low	Slow to rapid	Low or thread cannot be formed
CL	Medium to high	None to slow	Medium
MH	Low to medium	None to slow	Low to medium
CH	High to very high	None	High

15.2 The soil is a *sand* if the percentage of gravel is estimated to be equal to or less than the percentage of sand.

15.3 The soil is a *clean gravel* or *clean sand* if the percentage of fines is estimated to be 5 % or less.

15.3.1 Identify the soil as a *well-graded gravel*, GW, or as a *well-graded sand*, SW, if it has a wide range of particle sizes and substantial amounts of the intermediate particle sizes.

15.3.2 Identify the soil as a *poorly graded gravel*, GP, or as a *poorly graded sand*, SP, if it consists predominantly of one size (uniformly graded), or it has a wide range of sizes with some intermediate sizes obviously missing (gap or skip graded).

15.4 The soil is either a *gravel with fines* or a *sand with fines* if the percentage of fines is estimated to be 15 % or more.

15.4.1 Identify the soil as a *clayey gravel*, GC, or a *clayey sand*, SC, if the fines are clayey as determined by the procedures in Section 14.

15.4.2 Identify the soil as a *silty gravel*, GM, or a *silty sand*, SM, if the fines are silty as determined by the procedures in Section 14.

15.5 If the soil is estimated to contain 10 % fines, give the soil a dual identification using two group symbols.

15.5.1 The first group symbol shall correspond to a clean gravel or sand (GW, GP, SW, SP) and the second symbol shall correspond to a gravel or sand with fines (GC, GM, SC, SM).

15.5.2 The group name shall correspond to the first group symbol plus the words "with clay" or "with silt" to indicate the plasticity characteristics of the fines. For example: "well-graded gravel with clay, GW-GC" or "poorly graded sand with silt, SP-SM" (see Fig. 2).

15.6 If the specimen is predominantly sand or gravel but contains an estimated 15 % or more of the other coarse-grained constituent, the words "with gravel" or "with sand" shall be added to the group name. For example: "poorly graded gravel with sand, GP" or "clayey sand with gravel, SC" (see Fig. 2).

15.7 If the field sample contains any cobbles or boulders, or both, the words "with cobbles" or "with cobbles and boulders" shall be added to the group name. For example: "silty gravel with cobbles, GM."

16. Report

16.1 The report shall include the information as to origin, and the items indicated in Table 13.

NOTE 13—*Example: Clayey Gravel with Sand and Cobbles, GC*—About 50 % fine to coarse, subrounded to subangular gravel; about 30 % fine to coarse, subrounded sand; about 20 % fines with medium plasticity, high dry strength, no dilatancy, medium toughness; weak reaction with HCl; original field sample had about 5 % (by volume) subrounded cobbles, maximum dimension, 150 mm.

In-Place Conditions—Firm, homogeneous, dry, brown

Geologic Interpretation—Alluvial fan

NOTE 14—Other examples of soil descriptions and identification are given in Appendixes X1 and X2.

NOTE 15—If desired, the percentages of gravel, sand, and fines may be stated in terms indicating a range of percentages, as follows:

Trace—Particles are present but estimated to be less than 5 %
Few—5 to 10 %
Little—15 to 25 %
Some—30 to 45 %
Mostly—50 to 100 %

TABLE 13 Checklist for Description of Soils

1. Group name
2. Group symbol
3. Percent of cobbles or boulders, or both (by volume)
4. Percent of gravel, sand, or fines, or all three (by dry weight)
5. Particle-size range:
   Gravel—fine, coarse
   Sand—fine, medium, coarse
6. Particle angularity: angular, subangular, subrounded, rounded
7. Particle shape: (if appropriate) flat, elongated, flat and elongated
8. Maximum particle size or dimension
9. Hardness of coarse sand and larger particles
10. Plasticity of fines: nonplastic, low, medium, high
11. Dry strength: none, low, medium, high, very high
12. Dilatancy: none, slow, rapid
13. Toughness: low, medium, high
14. Color (in moist condition)
15. Odor (mention only if organic or unusual)
16. Moisture: dry, moist, wet
17. Reaction with HCl: none, weak, strong

For intact samples:

18. Consistency (fine-grained soils only): very soft, soft, firm, hard, very hard
19. Structure: stratified, laminated, fissured, slickensided, lensed, homogeneous
20. Cementation: weak, moderate, strong
21. Local name
22. Geologic interpretation
23. Additional comments: presence of roots or root holes, presence of mica, gypsum, etc., surface coatings on coarse-grained particles, caving or sloughing of auger hole or trench sides, difficulty in augering or excavating, etc.

16.2 If, in the soil description, the soil is identified using a classification group symbol and name as described in Test Method D 2487, it must be distinctly and clearly stated in log forms, summary tables, reports, and the like, that the symbol and name are based on visual-manual procedures.

17. Precision and Bias

17.1 This practice provides qualitative information only, therefore, a precision and bias statement is not applicable.

18. Keywords

18.1 classification; clay; gravel; organic soils; sand; silt; soil classification; soil description; visual classification

216

APPENDIXES

(Nonmandatory Information)

X1. EXAMPLES OF VISUAL SOIL DESCRIPTIONS

X1.1 The following examples show how the information required in 16.1 can be reported. The information that is included in descriptions should be based on individual circumstances and need.

X1.1.1 *Well-Graded Gravel with Sand (GW)*—About 75 % fine to coarse, hard, subangular gravel; about 25 % fine to coarse, hard, subangular sand; trace of fines; maximum size, 75 mm, brown, dry; no reaction with HCl.

X1.1.2 *Silty Sand with Gravel (SM)*—About 60 % predominantly fine sand; about 25 % silty fines with low plasticity, low dry strength, rapid dilatancy, and low toughness; about 15 % fine, hard, subrounded gravel, a few gravel-size particles fractured with hammer blow; maximum size, 25 mm; no reaction with HCl (Note—Field sample size smaller than recommended).

In-Place Conditions—Firm, stratified and contains lenses of silt 1 to 2 in. (25 to 50 mm) thick, moist, brown to gray; in-place density 106 lb/ft^3; in-place moisture 9 %.

X1.1.3 *Organic Soil (OL/OH)*—About 100 % fines with low plasticity, slow dilatancy, low dry strength, and low toughness; wet, dark brown, organic odor; weak reaction with HCl.

X1.1.4 *Silty Sand with Organic Fines (SM)*—About 75 % fine to coarse, hard, subangular reddish sand; about 25 % organic and silty dark brown nonplastic fines with no dry strength and slow dilatancy; wet; maximum size, coarse sand; weak reaction with HCl.

X1.1.5 *Poorly Graded Gravel with Silt, Sand, Cobbles and Boulders (GP-GM)*—About 75 % fine to coarse, hard, subrounded to subangular gravel; about 15 % fine, hard, subrounded to subangular sand; about 10 % silty nonplastic fines; moist, brown; no reaction with HCl; original field sample had about 5 % (by volume) hard, subrounded cobbles and a trace of hard, subrounded boulders, with a maximum dimension of 18 in. (450 mm).

X2. USING THE IDENTIFICATION PROCEDURE AS A DESCRIPTIVE SYSTEM FOR SHALE, CLAYSTONE, SHELLS, SLAG, CRUSHED ROCK, AND THE LIKE

X2.1 The identification procedure may be used as a descriptive system applied to materials that exist in-situ as shale, claystone, sandstone, siltstone, mudstone, etc., but convert to soils after field or laboratory processing (crushing, slaking, and the like).

X2.2 Materials such as shells, crushed rock, slag, and the like, should be identified as such. However, the procedures used in this practice for describing the particle size and plasticity characteristics may be used in the description of the material. If desired, an identification using a group name and symbol according to this practice may be assigned to aid in describing the material.

X2.3 The group symbol(s) and group names should be placed in quotation marks or noted with some type of distinguishing symbol. See examples.

X2.4 Examples of how group names and symbols can be incororated into a descriptive system for materials that are not naturally occurring soils are as follows:

X2.4.1 *Shale Chunks*—Retrieved as 2 to 4-in. (50 to 100-mm) pieces of shale from power auger hole, dry, brown, no reaction with HCl. After slaking in water for 24 h, material identified as "Sandy Lean Clay (CL)"; about 60 % fines with medium plasticity, high dry strength, no dilatancy, and medium toughness; about 35 % fine to medium, hard sand; about 5 % gravel-size pieces of shale.

X2.4.2 *Crushed Sandstone*—Product of commercial crushing operation; "Poorly Graded Sand with Silt (SP-SM)"; about 90 % fine to medium sand; about 10 % nonplastic fines; dry, reddish-brown, strong reaction with HCl.

X2.4.3 *Broken Shells*—About 60 % gravel-size broken shells; about 30 % sand and sand-size shell pieces; about 10 % fines; "Poorly Graded Gravel with Sand (GP)."

X2.4.4 *Crushed Rock*—Processed from gravel and cobbles in Pit No. 7; "Poorly Graded Gravel (GP)"; about 90 % fine, hard, angular gravel-size particles; about 10 % coarse, hard, angular sand-size particles; dry, tan; no reaction with HCl.

X3. SUGGESTED PROCEDURE FOR USING A BORDERLINE SYMBOL FOR SOILS WITH TWO POSSIBLE IDENTIFICATIONS.

X3.1 Since this practice is based on estimates of particle size distribution and plasticity characteristics, it may be difficult to clearly identify the soil as belonging to one category. To indicate that the soil may fall into one of two possible basic groups, a borderline symbol may be used with the two symbols separated by a slash. For example: SC/CL or CL/CH.

X3.1.1 A borderline symbol may be used when the

percentage of fines is estimated to be between 45 and 55 %. One symbol should be for a coarse-grained soil with fines and the other for a fine-grained soil. For example: GM/ML or CL/SC.

X3.1.2 A borderline symbol may be used when the percentage of sand and the percentage of gravel are estimated to be about the same. For example: GP/SP, SC/GC, GM/SM. It is practically impossible to have a soil that would have a borderline symbol of GW/SW.

X3.1.3 A borderline symbol may be used when the soil could be either well graded or poorly graded. For example: GW/GP, SW/SP.

X3.1.4 A borderline symbol may be used when the soil could either be a silt or a clay. For example: CL/ML, CH/MH, SC/SM.

X3.1.5 A borderline symbol may be used when a fine-grained soil has properties that indicate that it is at the boundary between a soil of low compressibility and a soil of high compressibility. For example: CL/CH, MH/ML.

X3.2 The order of the borderline symbols should reflect similarity to surrounding or adjacent soils. For example: soils in a borrow area have been identified as CH. One sample is considered to have a borderline symbol of CL and CH. To show similarity, the borderline symbol should be CH/CL.

X3.3 The group name for a soil with a borderline symbol should be the group name for the first symbol, except for:

CL/CH lean to fat clay
ML/CL clayey silt
CL/ML silty clay

X3.4 The use of a borderline symbol should not be used indiscriminately. Every effort shall be made to first place the soil into a single group.

X4. SUGGESTED PROCEDURES FOR ESTIMATING THE PERCENTAGES OF GRAVEL, SAND, AND FINES IN A SOIL SAMPLE

X4.1 *Jar Method*—The relative percentage of coarse- and fine-grained material may be estimated by thoroughly shaking a mixture of soil and water in a test tube or jar, and then allowing the mixture to settle. The coarse particles will fall to the bottom and successively finer particles will be deposited with increasing time; the sand sizes will fall out of suspension in 20 to 30 s. The relative proportions can be estimated from the relative volume of each size separate. This method should be correlated to particle-size laboratory determinations.

X4.2 *Visual Method*—Mentally visualize the gravel size particles placed in a sack (or other container) or sacks. Then, do the same with the sand size particles and the fines. Then, mentally compare the number of sacks to estimate the percentage of plus No. 4 sieve size and minus No. 4 sieve size present. The percentages of sand and fines in the minus sieve size No. 4 material can then be estimated from the wash test (X4.3).

X4.3 *Wash Test (for relative percentages of sand and fines)*—Select and moisten enough minus No. 4 sieve size material to form a 1-in (25-mm) cube of soil. Cut the cube in half, set one-half to the side, and place the other half in a small dish. Wash and decant the fines out of the material in the dish until the wash water is clear and then compare the two samples and estimate the percentage of sand and fines. Remember that the percentage is based on weight, not volume. However, the volume comparison will provide a reasonable indication of grain size percentages.

X4.3.1 While washing, it may be necessary to break down lumps of fines with the finger to get the correct percentages.

X5. RATIONALE

X5.1 This practice was significantly revised in the D 2488 – 84 version from the previous version D 2488 – 69 (1975). The revisions are documented in the literature.[3]

X5.2 Changes in this version from the previous version include rewording of 1.2.3 to say (disturbed and undisturbed), the addition of 5.7 to refer to the practice for describing frozen soils, and the addition of Appendix X5 on Rationale.

[3] Howard, A. K. "The Revised ASTM Standard on the Description and Identification of Soils (Visual-Manual Procedure)," *Geotechical Testing Journal*, GTJODJ Vol. 10, No. 4, December 1987.

The American Society for Testing and Materials takes no position respecting the validity of any patent rights asserted in connection with any item mentioned in this standard. Users of this standard are expressly advised that determination of the validity of any such patent rights, and the risk of infringement of such rights, are entirely their own responsibility.

This standard is subject to revision at any time by the responsible technical committee and must be reviewed every five years and if not revised, either reapproved or withdrawn. Your comments are invited either for revision of this standard or for additional standards and should be addressed to ASTM Headquarters. Your comments will receive careful consideration at a meeting of the responsible technical committee, which you may attend. If you feel that your comments have not received a fair hearing you should make your views known to the ASTM Committee on Standards, 1916 Race St., Philadelphia, PA 19103.

Designation: D 3080 – 90

Standard Test Method for Direct Shear Test of Soils Under Consolidated Drained Conditions[1]

This standard is issued under the fixed designation D 3080; the number immediately following the designation indicates the year of original adoption or, in the case of revision, the year of last revision. A number in parentheses indicates the year of last reapproval. A superscript epsilon (ε) indicates an editorial change since the last revision or reapproval.

1. Scope

1.1 This test method covers the determination of the consolidated drained shear strength of a soil material in direct shear. The test is performed by deforming a specimen at a controlled strain rate on or near a single shear plane determined by the configuration of the apparatus. Generally, three or more specimens are tested, each under a different normal load, to determine the effects upon shear resistance and displacement, and strength properties such as Mohr strength envelopes.

1.2 Shear stresses and displacements are nonuniformly distributed within the specimen. An appropriate height cannot be defined for calculation of shear strains. Therefore, stress-strain relationships or any associated quantity such as modulus, cannot be determined from this test.

1.3 The determination of strength envelopes and the development of criteria to interpret and evaluate test results are left to the engineer or office requesting the test.

1.4 The results of the test may be affected by the presence of soil or rock particles, or both, (see Section 7).

1.5 Test conditions including normal stress and moisture environment are selected which represent the field conditions being investigated. The rate of shearing should be slow enough to ensure drained conditions.

1.6 The values stated in inch-pound units are to be regarded as the standard. Within this test method the SI units are shown in brackets. The values stated in each system are not exact equivalents; therefore, each system must be used independently of each other.

1.7 *This standard does not purport to address the safety problems associated with its use. It is the responsibility of the user of this standard to establish appropriate safety and health practices and determine the applicability of regulatory limitations prior to use.*

2. Referenced Documents

2.1 *ASTM Standards:*

D 422 Method for Particle-Size Analysis of Soils[2]

D 653 Terminology Relating to Soil, Rock, and Contained Fluids[2]

D 698 Test Methods for Moisture-Density Relations of Soils and Soil Aggregate Mixtures Using 5.5 lb (2.49 kg) Rammer and 12-in. (305 mm) Drop[2]

D 854 Test Method for Specific Gravity of Soils[2]

D 1557 Test Methods for Moisture-Density Relations of Soils and Soil Aggregate Mixtures Using 10-lb (4.54 kg) Rammer and 18-in. (457 mm) Drop[2]

D 1587 Practice for Thin-Walled Tube Sampling of Soils[2]

D 2216 Method for Laboratory Determination of Water (Moisture) Content of Soil, Rock, and Soil Aggregate Mixtures[2]

D 2435 Test Method for One Dimensional Consolidation Properties of Soils[2]

D 2487 Test Method for Classification of Soils for Engineering Purposes[2]

D 2488 Practice for Description and Identification of Soils (Visual-Manual Procedure)[2]

D 4220 Practices for Preserving and Transporting Soil Samples[2]

D 4318 Test Method for Liquid Limit, Plastic Limit, and Plasticity Index of Soils[2]

D 4753 Specifications for Evaluating, Selecting, and Specifying Balances and Scales for Use in Soil and Rock Testing[2]

3. Terminology

3.1 *Definitions*—For definitions of terms used in this test method, refer to Terminology D 653

3.2 *Description of Terms Specific to This Standard:*

3.2.1 *Relative lateral displacement*—the horizontal displacement of the top and bottom shear box halves.

3.2.2 *Failure*—the stress condition at failure for a test specimen. Failure is often taken to correspond to the maximum shear stress attained, or the shear stress at 15 to 20 percent relative lateral displacement. Depending on soil behavior and field application, other suitable criteria may be defined.

4. Summary of Test Method

4.1 This test method consists of placing the test specimen in the direct shear device, applying a predetermined normal stress, providing for wetting or draining of the test specimen, or both, consolidating the specimen under the normal stress, unlocking the frames that hold the test specimen, and displacing one frame horizontally with respect to the other at a constant rate of shearing deformation and measuring the shearing force and horizontal displacements as the specimen is sheared (Fig. 1).

5. Significance and Use

5.1 The direct shear test is suited to the relatively rapid determination of consolidated drained strength properties

[1] This test method is under the jurisdiction of ASTM Committee D-18 on Soil and Rock and is the direct responsibility of Subcommittee D18.05 on Structural Properties of Soils.

Current edition approved Nov. 30, 1990. Published January 1991. Originally published as D 3080 – 72. Last previous edition D 3080 – 72(79).

[2] *Annual Book of ASTM Standards*, Vol 04.08.

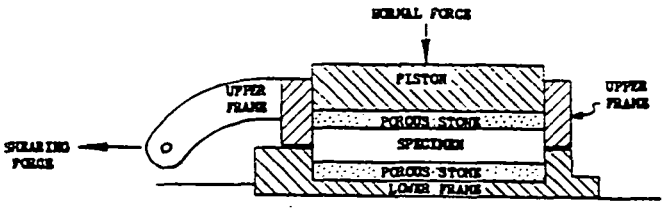

FIG. 1 Test Specimens in (a) Single and (b) Double Shear

because the drainage paths through the test specimen are short, thereby allowing excess pore pressure to be dissipated more rapidly than with other drained stress tests. The test can be made on all soil materials and undisturbed, remolded or compacted materials. There is however, a limitation on maximum particle size (see 7.2).

5.2 The test results are applicable to assessing strength in a field situation where complete consolidation has occurred under the existing normal stresses. Failure is reached slowly under drained conditions so that excess pore pressures are dissipated. The results from several tests may be used to express the relationship between consolidation stress and drained shear strength.

5.3 During the direct shear test, there is rotation of principal stresses, which may or may not model field conditions. Moreover, failure may not occur on the weak plane since failure is forced to occur on or near a horizontal plane at the middle of the specimen. The fixed location of the plane in the test can be an advantage in determining the shear resistance along recognizable weak planes within the soil material and for testing interfaces between dissimilar materials.

5.4 Shear stresses and displacements are nonuniformly distributed within the specimen, and an appropriate height is not defined for calculating shear strains or any associated engineering quantity. The slow rate of displacement provides for dissipation of excess pore pressures, but it also permits plastic flow of soft cohesive soils. Care should be taken to ensure that the testing conditions represent those conditions being investigated.

5.5 The range in normal stresses, rate of shearing, and general test conditions should be selected to approximate the specific soil conditions being investigated.

6. Apparatus

6.1 *Shear Device*—a device to hold the specimen securely between two porous inserts in such a way that torque is not applied to the specimen. The shear device shall provide a means of applying a normal stress to the faces of the specimen, for measuring change in thickness of the specimen, for permitting drainage of water through the porous inserts at the top and bottom boundaries of the specimen, and for submerging the specimen in water. The device shall be capable of applying a shear force to the specimen in water. The device shall be capable of applying a shear force to the specimen along a predetermined shear plane (single shear) parallel to the faces of the specimen. The frames that hold the specimen shall be sufficiently rigid to prevent their distortion during shearing. The various parts of the shear device shall be made of material not subject to corrosion by moisture or substances within the soil, for example, stainless steel, bronze, or aluminum, etc. Dissimilar metals, which may cause galvanic action, are not permitted.

6.2 *Shear Box*, a shear box, either circular or square, made of stainless steel, bronze, or aluminum, with provisions for drainage through the top and bottom. The box is divided vertically by a horizontal plane into two halves of equal thickness which are fitted together with alignment screws. The shear box is also fitted with gap screws, which control the space (gap) between the top and bottom halves of the shear box.

6.3 *Porous Inserts*, Porous inserts function to allow drainage from the soil specimen along the top and bottom boundaries. They also function to transfer horizontal shear stress from the insert to the top and bottom boundaries of the specimen. Porous inserts shall consist of silicon carbide, aluminum oxide, or metal which is not subject to corrosion by soil substances or soil moisture. The proper grade of insert depends on the soil being tested. The permeability of the insert should be substantially greater than that of the soil, but should be textured fine enough to prevent excessive intrusion of the soil into the pores of the insert. The diameter or width of the top porous insert or plate shall be 0.01 to 0.02 in. (0.2 to 0.5 mm) less than that of the inside of the ring. If the insert functions to transfer the horizontal stress to the soil, it must be sufficiently coarse to develop interlock. Sandblasting or tooling the insert may help, but the surface of the insert should not be so irregular as to cause substantial stress concentrations in the soil.

NOTE 1—Exact criteria for insert texture and permeability have not been established. For normal soil testing, medium grade inserts with a permeability of about 0.5 to 1.0×10^3 ft/yr (5.0×10^{-4} to 1.0×10^{-3} cm/s) are appropriate for testing silts and clays, and coarse grade inserts with a permeability of about 0.5 to 1.0×10^5 ft/yr (0.05 to 0.10 cm/s) are appropriate for sands. It is important that the permeability of the porous insert is not reduced by the collection of soil particles in the pores of the insert; hence frequent checking and cleaning (by flushing and boiling, or by ultrasonic cleaning) are required to ensure the necessary permeability.

6.4 *Loading Devices:*

6.4.1 *Device for Applying and Measuring the Normal Force*—The normal force is applied by a lever loading yoke which is activated by dead weights (masses) or by a pneumatic loading device. The device shall be capable of maintaining the normal force to within ±1 percent of the specified force quickly without exceeding it.

6.4.2 *Device for Shearing the Specimen*—The device shall be capable of shearing the specimen at a uniform rate of displacement, with less than ±5 percent deviation, and should permit adjustment of the rate of displacement from 0.0001 to 0.04 in./min (.0025 to 1.0 mm/min). The rate to be applied depends upon the consolidation characteristics of the soils (see 9.12.1). The rate is usually maintained with an electric motor and gear box arrangement and the shear force is determined by a load indicating device such as a proving ring or load cell.

6.4.3 The weight of the top shear box should be less than 1 percent of the applied normal force: this may require that the top shear box be modified and supported by counter force.

NOTE 2—Shearing the test specimen at a rate greater than specified may produce partially drained shear results that will differ from the drained strength of the material.

220

6.5 *Shear force measurement device*—A proving ring or load cell accurate to 0.5 lbf (2.5 *N*), or 1 percent of the shear force at failure, whichever is greater.

6.6 *Shear box bowl*—A metallic box which supports the shear box and provides either a reaction against which one half of the shear box is restrained, or a solid base with provisions for aligning one half of the shear box, which is free to move coincident with applied shear force in a horizontal plane.

6.7 *Controlled High Humidity Room*, if required, for preparing specimens, such that water content gain or loss during specimen preparation is minimized.

6.8 *Trimmer or Cutting Ring*, for trimming oversized samples to the inside dimensions of the shear box with a minimum of disturbance. An exterior jig may be needed to maintain the shear box alignment.

6.9 *Balances*—in accordance with Test Method D 2216.

6.10 *Deformation Indicators*—Either dial gages or displacement transformers capable of measuring the change in thickness of the specimen, with a sensitivity of at least 0.0001 in. (0.0025 mm) and to measure horizontal displacement with sensitivity of at least 0.001 in. (0.025 mm).

6.11 *Apparatus for Determination of Water Content*, as specified in Test Method D 2216.

6.12 *Equipment for Remolding or Compacting Specimens*, if applicable.

6.13 Miscellaneous Equipment, including timing device with a second hand, distilled or demineralized water, spatulas, knives, straightedge, wire saws, etc., used in preparing the specimen.

7. Test Specimen

7.1 The sample used for specimen preparation should be sufficiently large so that a minimum of three similar specimens can be prepared. Prepare the specimens in a controlled temperature and humidity environment to minimize moisture loss or gain.

7.1.1 Extreme care should be taken in preparing undisturbed specimens of sensitive soils to prevent disturbance to the natural soil structure. Determine the initial mass of the wet specimen for use in calculating the initial water content and unit weight of the specimen.

7.2 The minimum specimen diameter for circular specimens, or width for square specimens, shall be 2.0 in. (50 mm), or not less than 10 times the maximum particle size diameter, whichever is larger, and conform to the width to thickness ratio specified in 7.4.

7.3 The minimum initial specimen thickness shall be 0.5 in. (13 mm), but not less than six times the maximum particle diameter.

7.4 The minimum specimen diameter to thickness or width to thickness ratio shall be 2:1.

NOTE 3—If large soil particles are found in the soil after testing, a particle size analysis should be performed in accordance with Method D 422 to confirm the visual observations, and the result should be provided with the test report.

7.5 *Specimen Preparation:*

7.5.1 *Undisturbed specimens*—Prepare undisturbed specimens from large undisturbed samples or from samples secured in accordance with Practice D 1587, or other undisturbed tube sampling procedures. Undisturbed samples shall be preserved and transported as outlined for Group C or D samples in Practice D 4220. Handle specimens carefully to minimize disturbance, changes in cross section, or loss of water content. If compression or any type of noticeable disturbance would be caused by the extrusion device, split the sample tube lengthwise or cut it off in small sections to facilitate removal of the specimen with minimum disturbance. Prepare trimmed specimens, whenever possible, in an environment which will minimize the gain or loss of specimen moisture.

NOTE 4—A controlled high-humidity room is desirable for this purpose.

7.5.2 *Compacted specimens*—Specimens shall be prepared using the compaction method, water content, and unit weight prescribed by the individual assigning the test. Assemble and secure the shear box. Place a moist porous insert in the bottom of the shear box. Specimens may be molded by either kneading or tamping each layer until the accumulative mass of the soil placed in the shear box is compacted to a known volume, or by adjusting the number of layers, the number of tamps per layer, and the force per tamp. The top of each layer shall be scarified prior to the addition of material for the next layer. The compacted layer boundaries should be positioned so they are not coincident with the shear plane defined by the shear box halves, unless this is the stated purpose for a particular test. The tamper used to compact the material shall have an area in contact with the soil equal to or less than ½ the area of the mold. Determine the mass of wet soil required for a single compacted lift and place it in the shear box. Compact the soil until the desired unit weight is obtained. Continue placing and compacting soil until the entire specimen is compacted.

NOTE 5—A light coating of grease applied to the inside of the shear box may be used to reduce friction between the specimen and shear box during consolidation. However, the upper ring in some shear devices requires friction to support the ring after the shear plates have been gapped. A light coating of grease applied between the halves of the shear box may be used to reduce friction between the halves of the shear box during shear. TFE-fluorocarbon coating may also be used on these surfaces instead of grease to reduce friction.

NOTE 6—The required thickness of the compacted lift may be determined by directly measuring the thickness of the lift, or from the marks on the tamping rod which correspond to the thickness of the lift being placed.

NOTE 7—The decision to dampen the porous inserts by inundating the shear box before applying the normal force depends on the problem under study. For undisturbed samples obtained below the water table, the porous inserts are usually dampened. For swelling soils, the sequence of consolidation, wetting, and shearing should model field conditions. Determine the compacted mass of the specimen from either the measured mass placed and compacted in the mold, or the difference between the mass of the shear box and compacted specimen and the tare mass of the shear box.

7.6 Material required for the specimen shall be batched by thoroughly mixing soil with sufficient water to produce the desired water content. Allow the specimen to stand prior to compaction in accordance with the following guide:

Classification D2487	Minimum Standing Time, h
SW, SP	No Requirement
SM	3
SC, ML, CL	18
MH, CH	36

7.7 Compacted specimens may also be prepared by com-

pacting soil using the procedures and equipment used to determine moisture-density relationships of soils (Test Methods D 698 or D 1557), and trimming the direct shear test specimen from the larger test specimen as though it were an undisturbed specimen.

8. Calibration

8.1 The calibration is to determine the deformation of the apparatus when subject to the consolidation load, so that for each normal consolidation load the apparatus deflection may be subtracted from the observed deformations. Therefore, only deformation due to sample consolidation will be reported for complete tests. Calibration for the equipment load-deformation characteristics need to be performed on the apparatus when first placed in service, or when apparatus parts are changed.

8.2 Assemble the direct-shear device with a metal calibration disk or plate of a thickness approximately equal to the desired test specimen and about ¼ in. (5 mm) smaller in diameter or width.

8.3 Position the normal displacement indicator. Adjust this indicator so that it can be used to measure either consolidation or swell from the calibration disk or plate reading. Record the zero or "no load" reading.

8.4 Apply increments of normal force up to the equipment limitations, and record the normal displacement indicator reading and normal force. Remove the applied normal force in reverse sequence of the applied force, and record the normal displacement indicator readings and normal force. Average the values and plot the load deformation of the apparatus as a function of normal load. Retain the results for future reference in determining the thickness of the test specimen and compression within the test apparatus itself.

8.5 Remove the calibration disk or plate.

NOTE 8—Other methods of proven accuracy for calibrating the apparatus are acceptable.

9. Procedures

9.1 Assemble the shear box.

9.1.1 *Undisturbed Specimen*—Place moist porous inserts over the exposed ends of the specimen in the shear box; place the shear box containing the undisturbed specimen and porous inserts into the shear box bowl and attach the shear box.

NOTE 9—For some apparatus, the top half of the shear box is held in place by a notched rod which fits into a receptacle in the top half of the shear box. The bottom half of the shear box is held in place in the shear box bowl retaining bolts. For some apparatus, the top half of the shear box is held in placed by an anchor plate.

9.1.2 *Compacted Specimen*—Place the shear box containing the compacted specimen and porous inserts into the shear box bowl and attach the shear box.

9.2 Connect and adjust the shear force loading system so that no force is imposed on the load measuring device.

9.3 Properly position and adjust the horizontal displacement measurement device used to measure shear displacement. Obtain an initial reading or set the measurement device to indicate zero displacement.

9.4 Place a moist porous insert and load transfer plate on the top of the specimen in the shear box.

9.5 Place the normal force loading yoke into position and adjust it so the loading bar is horizontal. For dead load lever loading systems, level the lever. For pneumatic loading systems, adjust the yoke until it sits snugly against the recess in the load transfer plate, or place a ball bearing on the load transfer plate and adjust the yoke until the contact is snug.

9.6 Apply a small normal load to the specimen. Verify that all components of the loading system are seated and aligned. The top porous insert and load transfer plate must be aligned so that the movement of the load transfer plate into the shear box is not inhibited. Record the applied vertical load and horizontal load on the system.

NOTE 10—The normal stress applied to the specimen should be approximately 1 lbf/in.^{2} (7 kPa).

9.7 Attach and adjust the vertical displacement measurement device. Obtain initial reading for the vertical measurement device and a reading for the horizontal displacement measurement device.

9.8 If required, fill the shear box with water, and keep it full for the duration of the test.

9.9 Calculate and record the normal force required to achieve the desired normal stress or increment thereof. Apply the desired normal stress by adding the appropriate mass to the lever arm hanger, or by increasing the pneumatic pressure.

NOTE 11—The normal force used for the specimen will depend upon the data required. Application of the normal force in one increment may be appropriate for relatively firm soils. For relatively soft soils, application of the normal force in several increments may be necessary to prevent damage to the specimen.

9.10 Apply the desired normal load or increments thereof to the specimen and begin recording the normal deformation readings against elapsed time. For all load increments, verify completion of primary consolidation before proceeding (see Test Method D 2435). Plot the normal displacement versus either log of time or square root of time (in min).

9.11 After primary consolidation is completed, remove the alignment screws or pins from the shear box. Open the gap between the shear box halves to approximately 0.025 in. (0.64 mm) using the gap screws. Back out the gap screws.

NOTE 12—There may be instances when the gap between the plates should be increased to accommodate sand sizes greater than the specified gap. Presently there is insufficient information available for specifying gap dimension based on particle size distribution.

9.12 Shear the specimen.

9.12.1 Select the appropriate displacement rate. Shear the specimen at a relatively slow rate so that no excess pore pressure would exist at failure. The following equation shall be used as a guide to determine the estimated minimum time required from the start of the test to failure:

$$t_f = 50t_{50}$$

where:

t_f = total estimated elapsed time to failure, min,

t_{50} = time required for the specimen to achieve 50 percent consolidation under the specified normal stress (or increments thereof), min.

NOTE 13—If the normal displacement versus square root of time used, t_{50} can be calculated from the time to complete 90 % consolidation using the following expression:

222

$$t_{50} = \frac{t_{90}}{4.28}$$

where:

t_{90} = time required for the specimen to achieve 90 percent consolidation under the specified normal stress (or increment thereof), min.

4.28 = constant, relates displacement and time factors at 50 and 90 percent consolidation.

NOTE 14—If the material exhibits a tendency to swell, the soil must be inundated with water and must be permitted to achieve equilibrium under an increment of normal stress large enough to counteract the swell tendency before the minimum time to failure can be determined. The time-consolidation curve for subsequent normal stress increments are then valid for use in determining t_f.

NOTE 15—Some soils, such as dense sands and over consolidated clays, may not exhibit well defined time-settlement curves. Consequently, the calculation of t_f may produce an inappropriate estimate of the time required to fail the specimen under drained conditions. For over consolidated clays which are tested under normal stresses less than the soil's pre-consolidation pressure, it is suggested that a time to failure be estimated using a value of t_{50} equivalent to one obtained from normal consolidation time-settlement behavior. For clean dense sands which drain quickly, a value of 10 min may be used for t_f. For dense sands with more than 5 % fines, a value of 60 min may be used for t_f. If an alternative value of t_f is selected, the rationale for the selection shall be explained with the test results.

9.13 Determine the appropriate displacement from the following equation:

$$d_r = d_f/t_f$$

where:

d_r = displacement rate (in./min, mm/min),

d_f = estimated horizontal displacement at failure (in., mm),

t_f = total estimate elapsed time to failure, min.

NOTE 16—The magnitude of the estimated displacement at failure is dependent on many factors including the type and the stress history of the soil. As a guide, use d_f = 0.5 in. (12 mm) if the material is normally or lightly over consolidated fine-grained soil, otherwise use d_f = 0.2 in. (5 mm).

9.13.1 *Select and set the displacement rate*—For some types of apparatus, the displacement rate is achieved using combinations of gear wheels and gear lever positions. For other types the displacement rate is achieved by adjusting the motor speed.

9.13.2 Record the initial time, vertical and horizontal displacements, and normal and shear forces.

9.13.3 Start the apparatus and initiate shear.

9.13.4 Obtain data readings of time, vertical and horizontal displacement, and shear force at desired interval of displacement. Data readings should be taken at displacement intervals equal to 2 percent of the specimen diameter or width to accurately define a shear stress-displacement curve.

NOTE 17—Additional readings may be helpful in identifying the value of peak shear stress of over consolidated or brittle material.

NOTE 18—It may be necessary to stop the test and re-gap the shear box halves to maintain clearance between the shear box halves.

9.13.5 After reaching failure, stop the test apparatus. This displacement may range from 10 to 20 percent of the specimen's original diameter or length.

9.13.6 Remove the normal force from the specimen by removing the mass from the lever and hanger, or by releasing the pressure.

9.14 For cohesive test specimens, separate the shear box halves with a sliding motion along the failure plane. Do not pull the shear box halves apart perpendicularly to the failure surface, since it would damage the specimen. Photograph, sketch, or described in writing the failure surface. This procedure is not applicable to cohesionless specimens.

9.15 Remove the specimen from the shear box and determine its water content according to Test Method D 2216.

9.16 *Calculate and plot the following:*

9.16.1 Nominal shear stress versus relative lateral displacement.

10. Calculation

10.1 Calculate the following:

10.1.1 Nominal shear stress, acting on the specimen is,

$$\tau = \frac{F}{A}$$

where:

τ = nominal shear stress (lbf/in.^{2}, kPa),

F = shear force (lbf, N),

A = initial area of the specimen (in.^{2}, mm^2).

10.1.2 Normal stress acting on the specimen is,

$$\sigma_n = \frac{N}{A}$$

where:

σ_n = normal stress (lbf/in.^{2}, kPa),

N = normal vertical force acting on the specimen (lbf, N).

NOTE 19—Factors which incorporate assumptions regarding the actual specimen surface area over which the shear and normal forces are measured can be applied to the calculated values of shear or normal stress, or both. If a correction(s) is made, the factor(s) and rationale for using the correction shall be explained with the test results.

10.1.3 *Displacement rate*—Calculate the actual displacement rate by dividing the relative lateral displacement by the elapsed time, or report the rate used for the test.

$$d_r = d_h/t_e$$

where:

d_r = displacement rate (in./min, mm/min),

d_h = relative lateral displacement (in./mm),

t_e = elapsed time of test (min).

10.1.4 Compute the initial void ratio, water content, dry unit weight and degree of saturation based on the specific gravity, and mass of the total specimen. Specimen volume is determined by measurements of the shear box lengths or diameter and of the measured thickness of the specimen.

11. Report

11.1 The report shall include the following:

11.1.1 Sample identification, project and location.

11.1.2 Description of type of shear device used in test.

11.1.3 Description of appearance of the specimen, based on Practice D 2488 (Test Method C 2487 may be used as an alternative), Atterberg limits (Test Method D 4318), and grain size data (Method D 422), if obtained (see 7.4).

11.1.4 Description of soil structure, that is whether the specimen is undisturbed, remolded, compacted, or otherwise prepared.

11.1.5 Initial and final water content.

11.1.6 Dry mass and initial and final wet unit weight.

11.1.7 Initial and final dry unit weight.

11.1.8 Initial thickness and diameter (width for square shear boxes).

11.1.9 Normal stress, rate of deformation, shear displacement, and corresponding nominal shear stress values and specimen thickness changes.

11.1.10 Plot of log of time or square root of time versus deformation of those load increments where t_{50} was determined.

11.1.11 Plot of nominal shear stress versus percent relative lateral displacement.

11.1.12 Departure from the procedure outlines, such as special loading sequences or special wetting requirements.

12. Precision and Bias

12.1 *Precision*—Data are being evaluated to determine the precision of this test method. In addition, subcommittee D 18.05 is seeking pertinent data from users of the test method.

12.2 *Bias*—There is no accepted reference value for this test method, therefore, bias cannot be determined.

13. Keywords

13.1 compacted specimens; consolidated; direct-shear test; drained test conditions; Mohr strength envelope; shear strength; undisturbed

The American Society for Testing and Materials takes no position respecting the validity of any patent rights asserted in connection with any item mentioned in this standard. Users of this standard are expressly advised that determination of the validity of any such patent rights, and the risk of infringement of such rights, are entirely their own responsibility.

This standard is subject to revision at any time by the responsible technical committee and must be reviewed every five years and if not revised, either reapproved or withdrawn. Your comments are invited either for revision of this standard or for additional standards and should be addressed to ASTM Headquarters. Your comments will receive careful consideration at a meeting of the responsible technical committee, which you may attend. If you feel that your comments have not received a fair hearing you should make your views known to the ASTM Committee on Standards, 1916 Race St., Philadelphia, PA 19103.

224

Designation: D 3550 – 84 (Reapproved 1991)$^{\epsilon 1}$

Standard Practice for Ring-Lines Barrel Sampling of Soils[1]

This standard is issued under the fixed designation D 3550; the number immediately following the designation indicates the year of original adoption or, in the case of revision, the year of last revision. A number in parentheses indicates the year of last reapproval. A superscript epsilon (ε) indicates an editorial change since the last revision or reapproval.

This standard has been approved for use by agencies of the Department of Defense. Consult the DoD Index of Specifications and Standards for the specific year of issue which has been adopted by the Department of Defense.

$^{\epsilon 1}$ NOTE—Section 8 was added editorially in November 1991.

1. Scope

1.1 This practice covers a procedure for using a ring-lined barrel sampler to obtain representative samples of soil for identification purposes and other laboratory tests. In cases where it has been established that the quality of the sample is adequate, this practice provides shear and consolidation specimens that can be used directly in the test apparatus without prior trimming. Some types of soils may gain or lose significant shear strength or compressibility, or both, as a result of sampling. In cases like these, suitable comparison tests should be made to evaluate the effect of sample disturbance on shear strength and compressibility.

1.2 This practice is not intended to be used as a penetration test; however, the force required to achieve penetration or a blow count, when driving is necessary, is recommended as supplemental information.

1.3 *This standard does not purport to address all of the safety problems, if any, associated with its use. It is the responsibility of the user of this standard to establish appropriate safety and health practices and determine the applicability of regulatory limitations prior to use.*

2. Referenced Documents

2.1 *ASTM Standards:*

D 1586 Method for Penetration Test and Split-Barrel Sampling of Soils[2]

D 1587 Practice for Thin-Walled Tube Sampling of Soils[2]

D 2113 Practice for Diamond Core Drilling for Site Investigation[2]

D 2488 Practice for Description and Identification of Soils (Visual-Manual Procedure)[2]

3. Significance and Use

3.1 This practice is used where soil condition and resistance to advance of the sampler do not permit the use of a thin-wall tube (Practice D 1587) and where the formation does not require diamond coring (Practice D 2113).

4. Apparatus

4.1 *Drilling Equipment*—Any drilling equipment may be used that provides a reasonably clean hole before insertion of the sampler and that does not disturb the soil to be sampled. However, in no case shall a bottom-discharge bit be permitted. Side-discharge bits are permissible.

4.2 *Drive Weight Assembly*—Any drive weight assembly that will provide penetration in the range from 1 to 20 blows per foot (65 blows per metre) may be used. Whenever possible, soils are to be sampled by pushing instead of driving (see Section 5).

4.3 *Ring-Lined Barrel Sampling Assembly*—This shall consist of a shoe, sampler, and waste barrel, as shown in Fig. 1.

4.4 *Ring-Lined Sampler*—Test specimens shall be obtained using a suitable one piece or split sampling barrel lined on the inside with removable rings. These rings shall be thin-walled and shall conform to the size requirements of the particular laboratory test determinations employed. They shall fit snugly inside the sampler with no discernible free play in any direction. The sampler may be sectionalized to allow end-to-end make up of sections as necessary. Each section shall be designed so that addition or removal of sections will not loosen, permit movement, or otherwise adversely affect retention of the rings within the sampler. The sampler and rings shall be free of bumps, dents, scratches, rust, dirt, and corrosion.

NOTE 1—It is recommended that the sampler contain at least six rings in order to provide samples for a variety of tests.

4.5 *Waste Barrel*—A waste barrel that can be removed from the sampler in the field shall be provided to contain space for disturbed soil originally at the bottom of the hole. The length of the waste barrel shall be at least three times its interior diameter, and the inside diameter shall be the same, or slightly larger than, the inside diameter of the rings.

4.5.1 An attachment, check valve, and one or more vents is required. The design of these items is optional.

4.6 *Shoe*—The shoe shall be machined as shown in Fig. 1. The inside of the assembled shoe and ring-lined sampler shall be smooth, straight, and uniform. The thin-walled extension of the shoe shall be 2 to 4 in. (51 to 102 mm) in outside diameter and made of any materials of adequate strength and resistance to corrosion. The length of the thin-walled extension shall be equal to three times the diameter of its opening, but shall not exceed 8 in. (203 mm). The inside clearance ratio shall be between 0.5 and 3.0 %. (See Fig. 1 for

[1] This practice is under the jurisdiction of ASTM Committee D-18 on Soil and Rock and is the direct responsibility of Subcommittee D18.02 on Sampling and Related Field Testing for Soil Investigations.

Current edition approved Jan. 27, 1984. Published April 1984. Originally published as D 3550 – 77. Last previous edition D 3550 – 77$^{\epsilon 1}$.

[2] *Annual Book of ASTM Standards*, Vol 04.08.

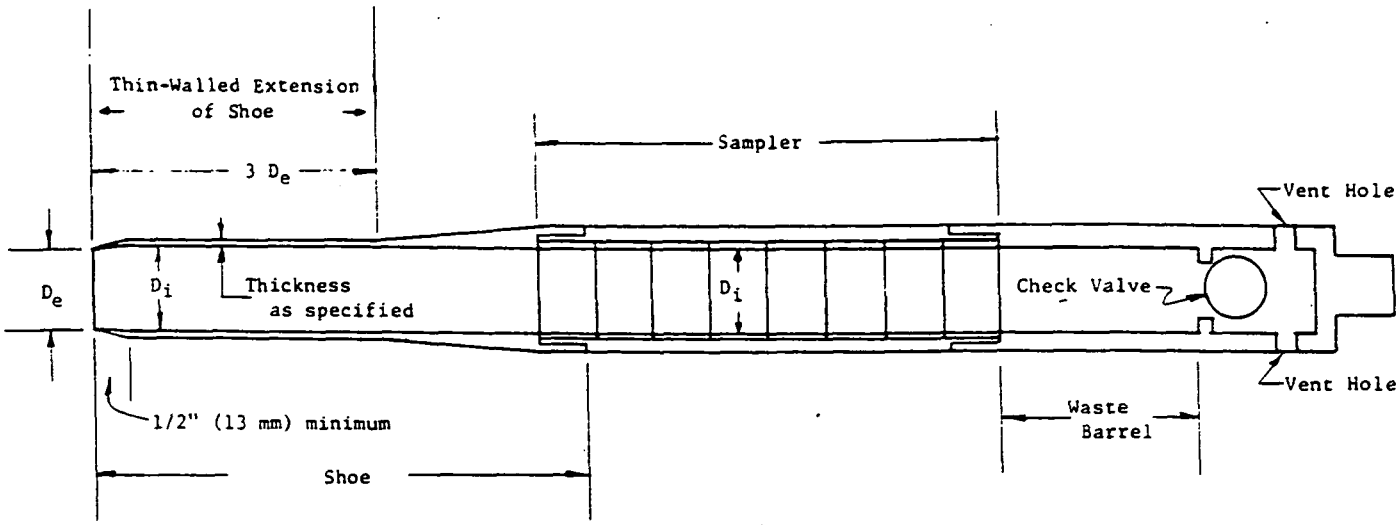

NOTE 1—Inside clearance ratio = $(D_i - D_e)/D_e$
NOTE 2—Dimensional tolerance of D_i = ±0.003 in. (±0.08 mm)

FIG. 1 Ring-Lined Barrel Sampling Assembly

inside clearance ratio formula.) The wall thickness of the thin-walled extension shall conform to Table 1.

4.6.1 The thin-walled extension of the shoe shall be perfectly round. Shoes that have become out-of-round for any reason shall not be used. If the thin-walled extension of the shoe deforms during sampling, the sample obtained shall not be used for tests, such as shear strength, where soil disturbance is a factor.

NOTE 2—The thin-walled extension of the shoe is not suitable for stiff or gravelly soils. In cases such as these, a shoe similar to the type specified in Method D 1586 is required for penetration. The use of this type of shoe, however, may result in excessive disturbance of the soil so that it is no longer suitable for shear or consolidation determinations, or both.

4.7 *Sample Extractor*—Specimen-filled rings shall be removed from the sampler by pressing them out or alternatively by the use of a split barrel. The extractor disk shall be at least 0.5 in. (13 mm) thick and shall bear solidly against the sample rings at all points. It shall slide easily inside the sampler barrel without jamming and without free play.

4.8 *Containers for Specimen-Filled Rings*—These shall be snug fitting, tightly sealed (watertight), rigid containers that will not permit movement of the specimen-filled rings inside. They shall be noncorrosive.

4.9 *Miscellaneous Equipment*—This includes a pipe vise, pipe wrenches, spatulas, cleaning brushes, buckets, rags, data sheets, transporting boxes, etc. Water must be available for cleaning the equipment.

5. Procedure

5.1 Clean the hole to sampling elevation using whatever method is preferred that will ensure that the material to be sampled is not disturbed. In saturated sands and silts, withdraw the drill bit slowly to prevent loosening of the soil around the hole. When casing is used, it shall not be driven below sampling elevation. Water or drilling liquid within the casing must be maintained at all times at or above the natural ground water level; it is preferable to keep the hole filled.

5.2 Keep a careful record of drill penetration and sampler depth to ensure that the soil being sampled is the original soil at the bottom of the hole and is not contaminated by soil falling down from the sides of the hole. If there is any significant tendency for soil to fall from the sides of the hole to the bottom, use water, drilling mud, or casing, as necessary, in order to prevent this from happening. The process of jetting through an open-tube sampler and then sampling when the desired depth is reached shall not be permitted. The use of bottom-discharge bits shall not be allowed.

5.3 Assemble the sampling assembly and lower it carefully into the hole. With the cutting edge of the shoe resting on the bottom of the hole and the water level in the boring at the ground water level or above, push the sampling assembly into the soil by a continuous and rapid motion without impact or twisting. Push the assembly in far enough so that all cuttings, sludge, and soil disturbed by drilling are in the waste barrel; however, in no case push the assembly farther than the total length of the shoe, sampler, and waste barrel. Take care that none of the sample is lost due to improper operation of the check valve.

5.4 When the soils are so hard that they cannot be penetrated by pushing, using generally acceptable field procedures, and where recovery by pushing in sands is poor, use a driving hammer to drive the sampling assembly. In such a case, record the hammer weight, height of drop, and number of blows.

5.5 Carefully disassemble the sampling assembly in such a manner as to minimize soil disturbance as much as possible. Trim the soil flush with the ends of the sampling barrel, and remove the specimen (consisting of soil plus rings). Slip the container over the specimen-filled rings and cap both ends. Be certain that there is no movement of the specimen-filled rings inside the container and that the specimen was not disturbed while being removed from the barrel and placed in the container. Label the container in a suitable manner. If the soil in the bottom end ring does not protrude from the ring after removing the shoe, do not use the soil in the

226

bottom ring for tests other than soil classification and moisture content. If the top ring or rings contain voids, depressions, or any material other than the soil which is being sampled, do not use the soil in this ring (or rings) for any purpose whatsoever. The filling of depressions in the end rings with additional soil shall not be permitted. Discard samples that appear to be disturbed or questionable.

5.6 Examine the soil remaining in the shoe for structure, consistency, color, and condition. Record these observations and include them in the report (see 6.1.8).

NOTE 3—The soil remaining in the shoe is relatively undisturbed and therefore may be suitable for a variety of laboratory tests.

6. Report

6.1 Data obtained in each boring shall be recorded in the field and shall contain the following:

6.1.1 Name and location of job,

6.1.2 Date of boring and times of start and finish,

6.1.3 Boring number and location,

6.1.4 Surface elevation, if available,

6.1.5 Sample number and depth,

6.1.6 Method of advancing sampler, penetration, and recovery lengths,

6.1.7 Description and size of sampler,

6.1.8 Description of soil (see Practice D 2488),

6.1.9 Thickness of layer,

6.1.10 Depth to water table or depth of overlying water and time of reading,

6.1.11 Size of casing, depth of cased hole,

6.1.12 Type of drilling equipment—description,

6.1.13 Names of personnel: crewman, field engineer, technician, etc.,

6.1.14 Weather conditions, and

6.1.15 General remarks.

7. Precision and Bias

7.1 This practice does not produce numerical or repeatable data and therefore a precision and bias statement is not applicable.

8. Keywords

8.1 consolidation; direct shear; identification; liner; representative; ring; sampling

The American Society for Testing and Materials takes no position respecting the validity of any patent rights asserted in connection with any item mentioned in this standard. Users of this standard are expressly advised that determination of the validity of any such patent rights, and the risk of infringement of such rights, are entirely their own responsibility.

This standard is subject to revision at any time by the responsible technical committee and must be reviewed every five years and if not revised, either reapproved or withdrawn. Your comments are invited either for revision of this standard or for additional standards and should be addressed to ASTM Headquarters. Your comments will receive careful consideration at a meeting of the responsible technical committee, which you may attend. If you feel that your comments have not received a fair hearing you should make your views known to the ASTM Committee on Standards, 1916 Race St., Philadelphia, PA 19103.

Designation: D 4220 – 89

Standard Practices for Preserving and Transporting Soil Samples[1]

This standard is issued under the fixed designation D 4220; the number immediately following the designation indicates the year of original adoption or, in the case of revision, the year of last revision. A number in parentheses indicates the year of last reapproval. A superscript epsilon (ε) indicates an editorial change since the last revision or reapproval.

1. Scope

1.1 These practices cover procedures for preserving soil samples immediately after they are obtained in the field and accompanying procedures for transporting and handling the samples.

1.2 *Limitations*—These practices are not intended to address requirements applicable to transporting of soil samples known or suspected to contain hazardous materials.

1.3 *This standard may involve hazardous materials, operations, and equipment. This standard does not purport to address all of the safety problems associated with its use. It is the responsibility of the user of this standard to establish appropriate safety and health practices and determine the applicability of regulatory limitations prior to use.* See Section 7.

2. Referenced Documents

2.1 *ASTM Standards:*

D 420 Practice for Investigating and Sampling Soil and Rock for Engineering Purposes[2]

D 653 Terminology Relating to Soil, Rock, and Contained Fluids[2]

D 1452 Practice for Soil Investigation and Sampling by Auger Borings[2]

D 1586 Method for Penetration Test and Split-Barrel Sampling of Soils[2]

D 1587 Practice for Thin-Walled Tube Sampling of Soils[2]

D 2488 Practice for Description and Identification of Soils (Visual-Manual Procedure)[2]

D 3550 Practice for Ring-Lined Barrel Sampling of Soils[2]

3. Terminology

3.1 Terminology in these practices is in accordance with Terminology D 653.

4. Summary of Practices

4.1 The various procedures are given under four groupings as follows:

4.1.1 *Group A*—Samples for which only general visual identification is necessary.

4.1.2 *Group B*—Samples for which only water content and classification tests, proctor and relative density, or profile logging is required, and bulk samples that will be remolded or compacted into specimens for swell pressure, percent swell, consolidation, permeability, shear testing, CBR, stabilimeter, etc.

4.1.3 *Group C*—Intact, naturally formed or field fabricated, samples for density determinations; or for swell pressure, percent swell, consolidation, permeability testing and shear testing with or without stress-strain and volume change measurements, to include dynamic and cyclic testing.

4.1.4 *Group D*—Samples that are fragile or highly sensitive for which tests in Group C are required.

4.2 The procedure(s) to be used should be included in the project specifications or defined by the designated responsible person.

5. Significance and Use

5.1 Use of the various procedures recommended in these practices is dependent on the type of samples obtained (Practice D 420), the type of testing and engineering properties required, the fragility and sensitivity of the soil, and the climatic conditions. In all cases, the primary purpose is to preserve the desired inherent conditions.

5.2 The procedures presented in these practices were primarily developed for soil samples that are to be tested for engineering properties, however, they may be applicable for samples of soil and other materials obtained for other purposes.

6. Apparatus

6.1 The type of materials and containers needed depend upon the conditions and requirements listed under the four groupings A to D in Section 4, and also on the climate and transporting mode and distance.

6.1.1 *Sealing Wax*, includes microcrystalline wax, paraffin, beeswax, ceresine, carnaubawax, or combinations thereof.

6.1.2 *Metal Disks*, about 1/16 in. (about 2 mm) thick and having a diameter slightly less than the inside diameter of the tube, liner, or ring and to be used in union with wax or caps and tape, or both.

6.1.3 *Wood Disks*, prewaxed, 1 in. (25 mm) thick and having a diameter slightly less than the inside diameter of the liner or tube.

6.1.4 *Tape*, either waterproof plastic, adhesive friction, or duct tape.

6.1.5 *Cheesecloth*, to be used in union with wax in alternative layers.

6.1.6 *Caps*, either plastic, rubber or metal, to be placed over the end of thin-walled tubes (Practice D 1587), liners and rings (Practice D 3550), in union with tape or wax.

6.1.7 *O'ring (Sealing End Caps)*, used to seal the ends of samples within thin-walled tubes, by mechanically expanding an O'ring against the tube wall.

[1] These practices are under the jurisdiction of ASTM Committee D-18 on Soil and Rock and are the direct responsibility of Subcommittee D18.02 on Sampling and Related Field Testing for Soil Investigations.

Current edition approved July 13, 1989. Published September 1989. Originally published as D 4220 – 83. Last previous edition D 4220 – 83.

[2] *Annual Book of ASTM Standards*, Vol 04.08.

NOTE 1—Plastic expandable end caps are preferred. Metal expandable end caps seal equally well; however, long-term storage may cause corrosion problems.

6.1.8 *Jars*, wide mouthed, with rubber-ringed lids or lids lined with a coated paper seal and of a size to comfortably receive the sample, commonly ½ pt (250 mL), 1 pt (500 mL) and quart-sized (1000 mL).

6.1.9 *Bag*, either plastic, burlap with liner, burlap or cloth type (Practice D 1452).

6.1.10 *Packing Material*, to protect against vibration and shock.

6.1.11 *Insulation*, either granule (bead), sheet or foam type, to resist temperature change of soil or to prevent freezing.

6.1.12 *Sample Cube Boxes*, for transporting cube (block) samples. Constructed with ½ to ¾ in. (13 to 19 mm) thick plywood (marine type).

6.1.13 *Cylindrical Sample Containers*, somewhat larger in dimension than the thin-walled tube or liner samples, such as cylindrical frozen food cartons.

6.1.14 *Shipping Containers*, either box or cylindrical type and of proper construction to protect against vibration, shock, and the elements, to the degree required.

NOTE 2—The length, girth and weight restrictions for commercial transportation must be considered.

6.1.15 *Identification Material*—This includes the necessary writing pens, tags, and labels to properly identify the sample(s).

7. Precautions

7.1 Special instructions, descriptions, and marking of containers must accompany any sample that may include radioactive, chemical, toxic, or other contaminant material.

7.2 Interstate transportation containment, storage, and disposal of soil samples obtained from certain areas within the United States and the transportation of foreign soils into or through the United States are subject to regulations established by the U.S. Department of Agriculture, Animal, and Plant Health Service, Plant Protection and Quarantine Programs, and possibly to regulations of other federal, state, or local agencies.

7.2.1 Samples shipped by way of common carrier or U.S. Postal Service must comply with the Department of Transportation Hazardous Materials Regulation, 49CRF Part 172.

7.3 Sample traceability records (see Fig. 1) are encouraged and should be required for suspected contaminated samples.

7.3.1 The possession of all samples must be traceable, from collection to shipment to laboratory to disposition, and should be handled by as few persons as possible.

7.3.2 The sample collector(s) should be responsible for initiating the sample traceability record; recording the project, sample identification and location, sample type, date, and the number and types of containers.

7.3.3 A separate traceability record shall accompany each shipment.

7.3.4 When transferring the possession of samples the person(s) relinquishing and receiving the samples shall sign, date, record the time, and check for completeness of the traceability record.

8. Procedure

8.1 *All Samples*—Properly identify samples with tags, labels, and markings prior to transporting them as follows:

8.1.1 Job name or number, or both,

8.1.2 Sampling date,

8.1.3 Sample/boring number and location,

8.1.4 Depth or elevation, or both,

8.1.5 Sample orientation,

8.1.6 Special shipping or laboratory handling instructions, or both, including sampling orientation, and

8.1.7 Penetration test data, if applicable (Test Method D 1586).

8.1.8 Subdivided samples must be identified while maintaining association to the original sample.

8.1.9 If required, sample traceability record.

8.2 *Group A*—Transport samples in any type of container by way of available transportation. If transported commercially, the container need only meet the minimum requirements of the transporting agency and any other requirements necessary to assure against sample loss.

8.3 *Group B:*

8.3.1 Preserve and transport these samples in sealed, moistureproof containers. All containers shall be of sufficient thickness and strength to ensure against breakage and moisture loss. The container types include: plastic bags or pails, glass or plastic (provided they are waterproof) jars, thin walled tubes, liners, and rings. Wrap cylindrical and cube samples in suitable plastic film or aluminum foil, or both (Note 3) and coat with several layers of wax, or seal in several layers of cheesecloth and wax.

8.3.2 Transport these samples by any available transportation. Ship these samples as prepared or placed in larger shipping containers, including bags, cardboard, or wooden boxes or barrels.

NOTE 3—Some soils may cause holes to develop in aluminum foil, due to corrosion. Avoid direct contact where adverse affects to sample composition are a concern.

8.3.3 *Plastic Bags*—Place the plastic bags as tightly as possible around the sample, squeezing out as much air as possible. They shall be 3 mil or thicker to prevent leakage.

8.3.4 *Glass-Plastic Jars*—If the jar lids are not rubber ringed or lined with new waxed paper seals, seal the lids with wax.

8.3.5 *Plastic Pails*—If the plastic pail lids are not air tight, seal them with wax or tape.

8.3.6 *Thin-Walled Tubes:*

8.3.6.1 *Expandable Packers*—The preferred method of sealing sample ends within tubes is with plastic, expandable packers.

8.3.6.2 *Wax With Disks*—For short-term sealing, paraffin wax is acceptable. For long term sealing (in excess of 3 days) use microcrystalline waxes or combine with up to 15 % beeswax or resin, for better adherence to the wall of the tube and to reduce shrinkage. Several thin layers of wax are preferred over one thick layer. The minimum final thickness shall be 0.4 in. (10 mm).

229

8.3.6.3 *End Caps*—Seal metal, rubber, or plastic end caps with tape. For long term storage (longer than 3 days), also seal them in wax, applying two or more layers of wax.

8.3.6.4 *Cheesecloth and Wax*—Use alternating layers (a minimum of two each) of cheesecloth and wax to seal each end of the tube and stabilize the sample.

NOTE 4—Where necessary, spacers or appropriate packing materials, or both, must be placed prior to sealing the tube ends to provide proper confinement. Packing material must be nonabsorbent and must maintain its properties to provide the same degree of continued sample support.

8.3.7 *Liners and Rings*—Refer to 8.3.6.3 or 8.3.6.4.

8.3.8 *Exposed Samples:*

8.3.8.1 *Cylindrical, Cubical or Other Samples Wrapped in Plastic*, such as polyethylene and polypropylene, or foil should be further protected with a minimum of three coats of wax.

8.3.8.2 *Cylindrical and Cube Samples Wrapped in Cheesecloth and Wax*, shall be sealed with a minimum of three layers of each, placed alternatively.

8.3.8.3 *Carton Samples (Frozen Food Cartons)*—Samples placed in these containers must be situated so that wax can be poured completely around the sample. The wax should fill the void between the sample and container wall. The wax should be sufficiently warm to flow, but not so hot that it penetrates the pores of the soil. Generally, the samples should be wrapped in plastic or foil before being surrounded with wax.

8.4 *Group C:*

8.4.1 Preserve and seal these samples in containers as covered in 8.3. In addition, they must be protected against vibration and shock, and protected from extreme heat or cold.

8.4.2 Samples transported by the sampling or testing agency personnel on seats of automobiles and trucks need only be placed in cardboard boxes, or similar containers into which the sealed samples fit snugly, preventing bumping, rolling, dropping, etc.

8.4.3 For all other methods of transporting samples, including automobile trunk, bus, parcel services, truck, boat, air, etc., place the sealed samples in wood, metal, or other type of suitable shipping containers that provide cushioning or insulation, or both, for each sample and container. Avoid transporting by any agency whose handling of containers is suspect.

8.4.4 The cushioning material (sawdust, rubber, polystyrene, urethane foam, or material with similar resiliency) should completely encase each sample. The cushioning between the samples and walls of the shipping containers should have a minimum thickness of 1 in. (25 mm). A minimum thickness of 2 in. (50 mm) shall be provided on the container floor.

8.4.5 When required, the samples should be shipped in the same orientation in which they were sampled. Otherwise, special conditions shall be provided such as freezing, controlled drainage, or sufficient confinement, or a combination thereof, to maintain sample integrity.

8.5 *Group D:*

8.5.1 The requirements of 8.4 must be met, in addition to the following:

8.5.1.1 Samples should be handled in the same orientation in which they were sampled, including during transportation or shipping, with appropriate markings on the shipping container.

8.5.1.2 For all modes of private or commercial transportation, the loading, transporting and unloading of the shipment containers should be supervised as much as possible by a qualified person.

NOTE 5—A qualified person may be an engineer, geologist, soil scientist, soils technician or responsible person designated by the project manager.

8.6 *Shipping Containers* (see Figs. 2 to 7 for typical containers):

8.6.1 The following features should be included in the design of the shipping container for Groups C and D.

8.6.1.1 It should be reuseable,

8.6.1.2 It should be constructed so that the samples can be maintained, at all times, in the same position as when sampled or packed, or both,

8.6.1.3 It should include sufficient packing material to cushion or isolate, or both, the tubes from the adverse effect of vibration and shock, and

8.6.1.4 It should include sufficient insulating material to prevent freezing, sublimation and thawing, or undesirable temperature changes.

8.6.2 *Wood Shipping Containers:*

8.6.2.1 Wood is preferred over metal. Outdoor (marine) plywood having a thickness of ½ and ¾ in. (13 to 19 mm) may be used. The top (cover) should be hinged and latched, or fastened with screws.

8.6.2.2 The cushioning requirements are given in 8.4.4.

8.6.2.3 For protection against freezing or extreme temperature variation, the entire shipping container should be lined with a minimum insulation thickness of 2 in. (50 mm).

8.6.3 *Metal Shipping Containers*—The metal shipping containers must incorporate cushioning and insulation material to minimum thicknesses in accordance with 8.6.2, although slightly greater thicknesses would be appropriate. Alternatively, the cushion effect could be achieved with a spring suspension system, or any other means that would provide similar protection.

8.6.4 *Styrene Shipping Containers*—Bulk styrene with slots cut to the dimensions of the sample tube or liner. A protective outer box of plywood or reinforced cardboard is recommended.

8.6.5 *Other Containers*—Containers constructed with laminated fiberboard, plastic or reinforced cardboard outer walls, and properly lined, may also be used.

9. Reporting

9.1 The data obtained in the field shall be recorded and should include the following:

9.1.1 Job name or number, or both,

9.1.2 Sampling date(s),

9.1.3 Sample/boring number(s) and location(s),

9.1.4 Depth(s) or elevation(s), or both,

9.1.5 Sample orientation,

Sample Identification/Traceability Record
(Controlled Document)

Project: _____ W.O. _____
Shipped by: _____
Shipped to: _____ Attention of:
Comments: _____ Hazardous materials suspected? (yes/no)

Sampling Point	Location	Field ID	Date	Sample Type	No. of Containers	Analysis/Test Required	(optional) Lab ID

Sampler(s) (signature) _____

Field ID	Relinquished by: (signature)	Date/Time		Received by: (signature)	Date/Time		Comments

Shipment prepared by: (signature) _____ Date/Time _____ Shipment method: _____

Received for Lab by: (signature) _____ Date/Time _____ Comments _____

Receiving Laboratory: Please return original form after signing for receipt of samples.

FIG. 1 Example Layout of Record Form

9.1.6 Groundwater observation, if any,

9.1.7 Method of sampling, and penetration test data, if applicable,

9.1.8 Sample dimensions,

9.1.9 Soil description (Practice D 2488),

9.1.10 Names of technician/crewman, engineer, project chief, etc.,

9.1.11 Comments regarding contaminated or possible contaminated samples,

9.1.12 If used, a copy of traceability records,

9.1.13 Weather conditions, and

9.1.14 General remarks.

10. Precision and Bias

10.1 This practice provides qualitative and general information only. Therefore, a precision and bias statement is not applicable.

231

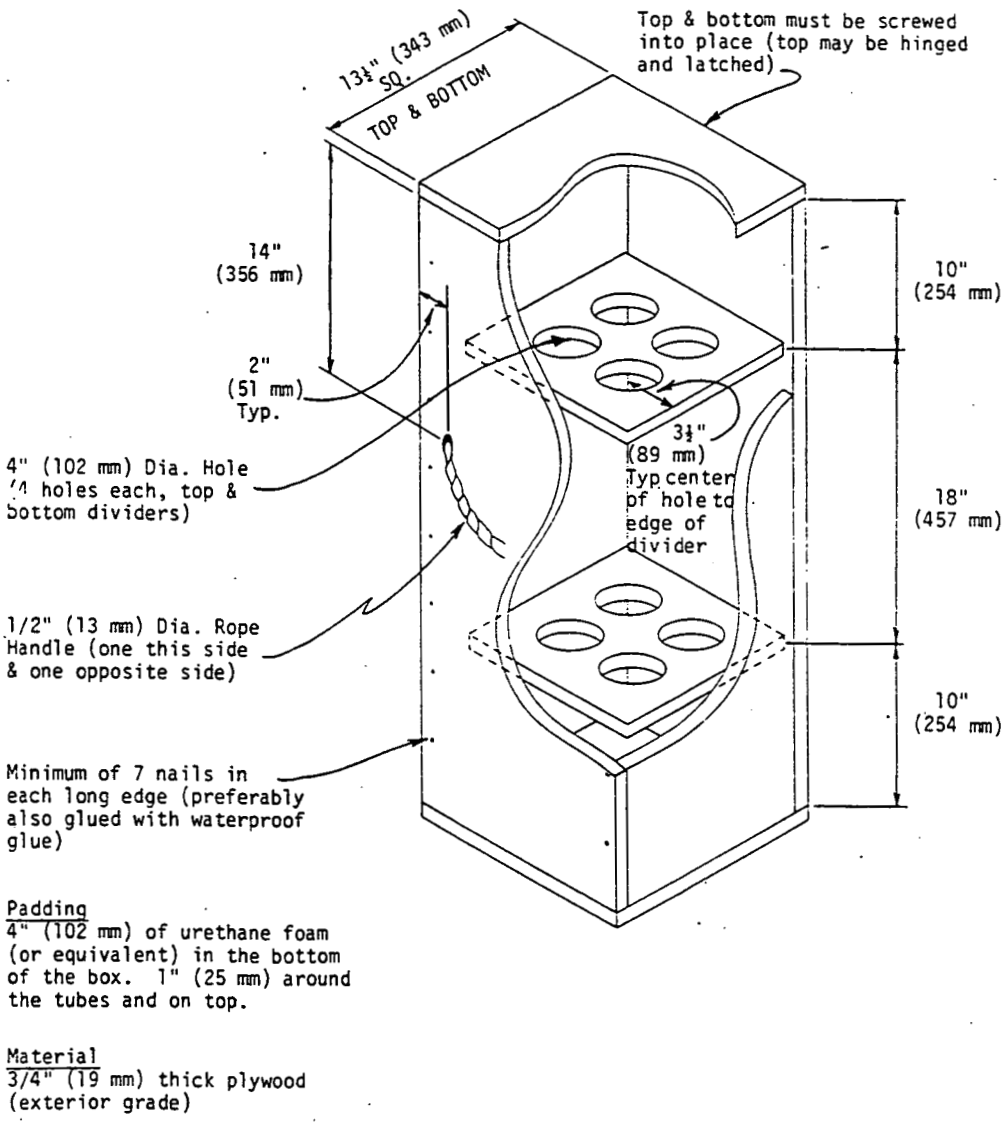

FIG. 2 Shipping Box for 3-in. (76-mm) Thin-Walled Tubes

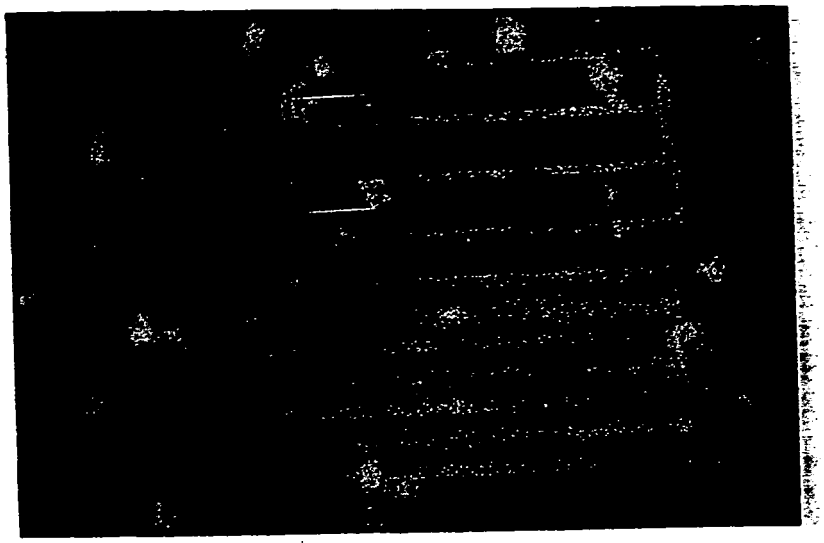

(a) Photo of Open Box For 5" (127 mm) Tubes

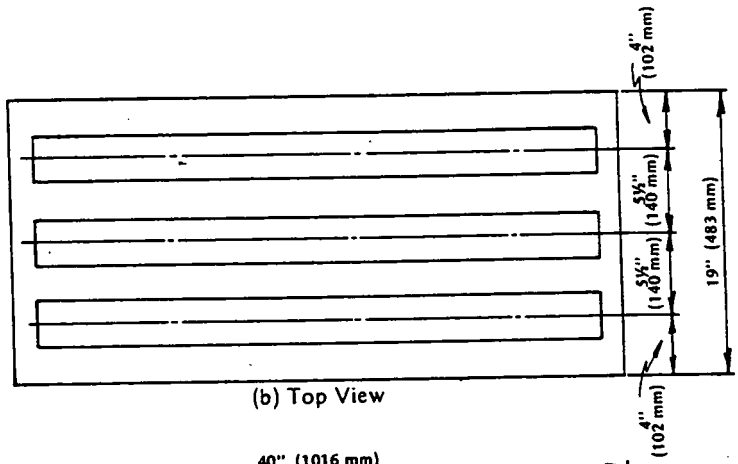

(b) Top View

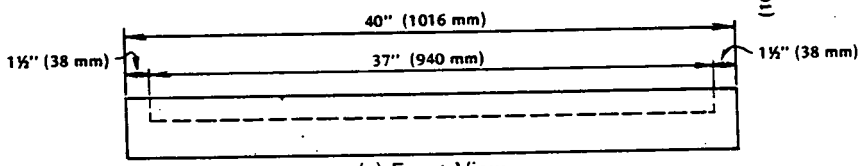

(c) Front View

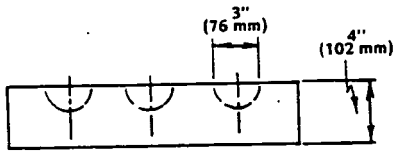

(d) Side View

NOTE—Top and bottom halves are identical.

FIG. 3 Styrene Shipping Container for 3-in. (76-mm) Thin-Walled Tubes

233

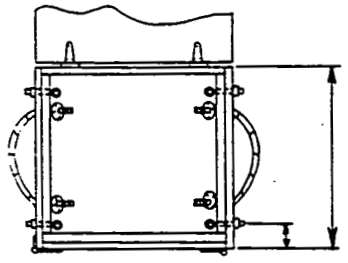

A. TOP VIEW
(lid open)

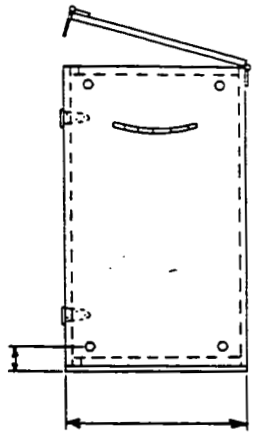

C. SIDE VIEW

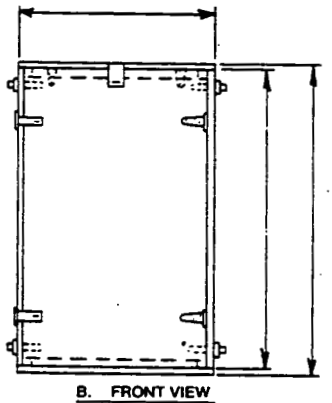

B. FRONT VIEW

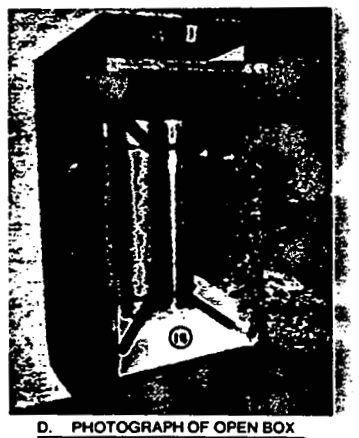

D. PHOTOGRAPH OF OPEN BOX

BILL OF MATERIALS

Item No.	Description of Item	Quantity
1	*Plywood*, 4 ft by 8 ft by ¾ in. (1220 mm by 2440 mm by 19.1 mm) exterior, Grade AC	1 Sheet
2	*Hinge*, strap, 4 in. (102 mm), heavy duty with screws	4 Each
3	*Hasp*, hinged, 4½ in. (114 mm), with screws	3 Each
4	*Screw, Wood, Steel, Flathead*, No. 10 by 1¾ in. (44.5 mm)	72 Each
5	*Bolt, Machine*, ⅜ in. (9.5 mm), with nut to secure hasps	3 Each
6	*Washer*, flat, ⅜ in. (9.5 mm)	3 Each
7	*Eye Bolt*, ½ by 2 in. (6.4 mm by 51 mm), zinc-plated, with nut	8 Each
8	*Washer*, flat, ¼ in. (6.4 mm), for hasp bolt	8 Each
9	*S Hooks*, 2 in. (51 mm), open, zinc-plated	8 Each
10	*Clamp*, adjustable, hose, steel, worm screw adjustment	2 Each
11	*Spring*, expansion	8 Each
12	*Adhesive*, woodworking	1 lb (454 g)
13	*Rope*, nylon, ½-in. (12.7-mm) diameter, solid braided	5 ft (1524 mm)
14	*Cushioning Material*, expanded polystyrene foam	10 ft^3 (0.28 m^3)

NOTES—(a) All wooden components can be sawed from one sheet of plywood.
(b) This shipping box will accommodate approximately three 3-in. (76-mm) diameter tubes or two 5-in (127-mm) diameter tubes up to 30 in. (762 mm) in length. For longer tubes the inside height of the box must be a minimum of 6-in. (152 mm) greater than the length of the tube.
(c) All joints to be glued and fastened with screws.
(d) Stencil all sides as follows (See Views B and C).
TO PROTECT FROM FREEZING
(e) After suspending samples as indicated above, all void space must be filled with a suitable resilient packing material.

FIG. 4 Suspension System Container for Thin-Walled Tubes

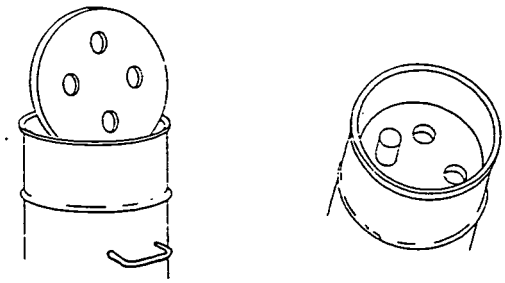

(a) 55-gallon (0.21 m^3) oil barrels with sections of styrofoam insulation; welded handles on each side.

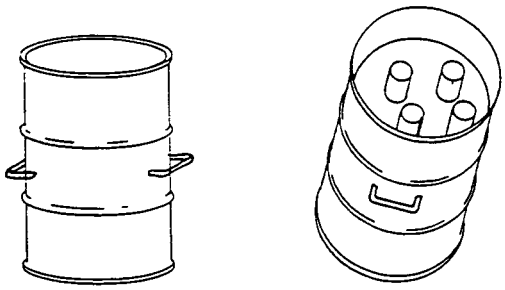

(b) Same as (a) showing barrel ready for shipment. Steel lids bolted on to provide tight seal.

NOTE—Two in. (51 mm) of foam rubber covers 2 in. of styrofoam at the base. One in. (25 mm) of foam rubber overlays the top of the tubes, and the remaining space to the lid is filled with styrofoam.

FIG. 5 Shipping Barrel for Thin-Walled Tubes

235

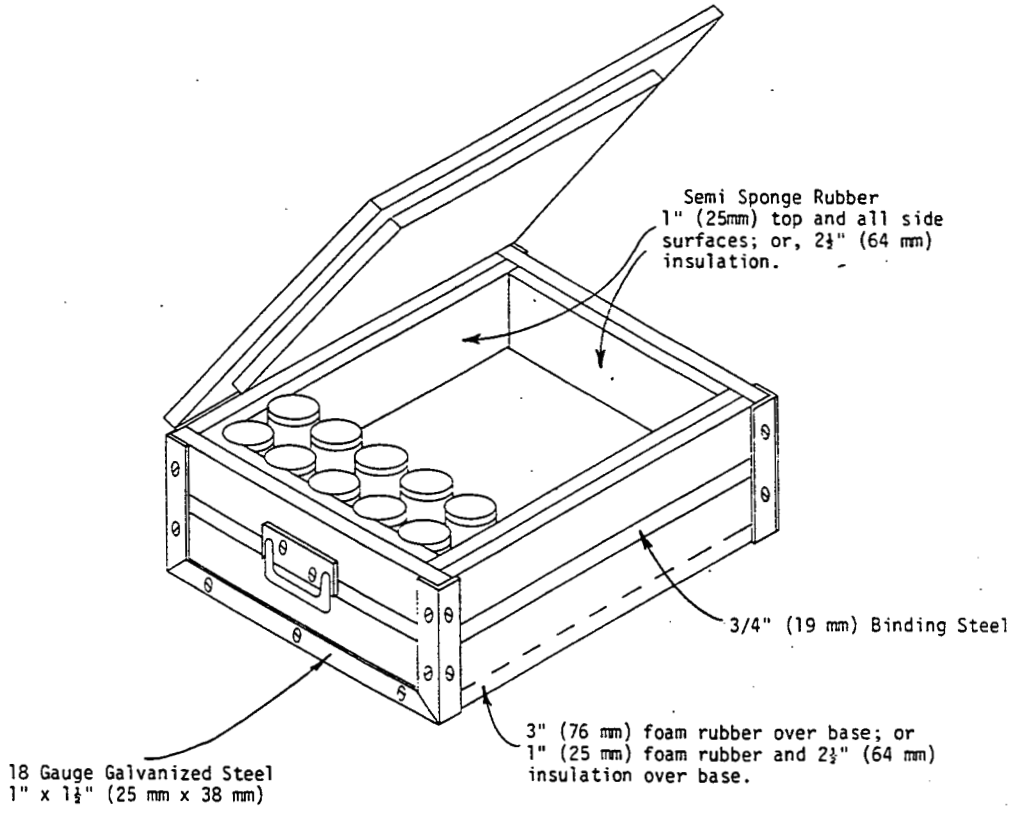

FIG. 6 Shipping Box for Liner (Short Tube) or Ring Samples

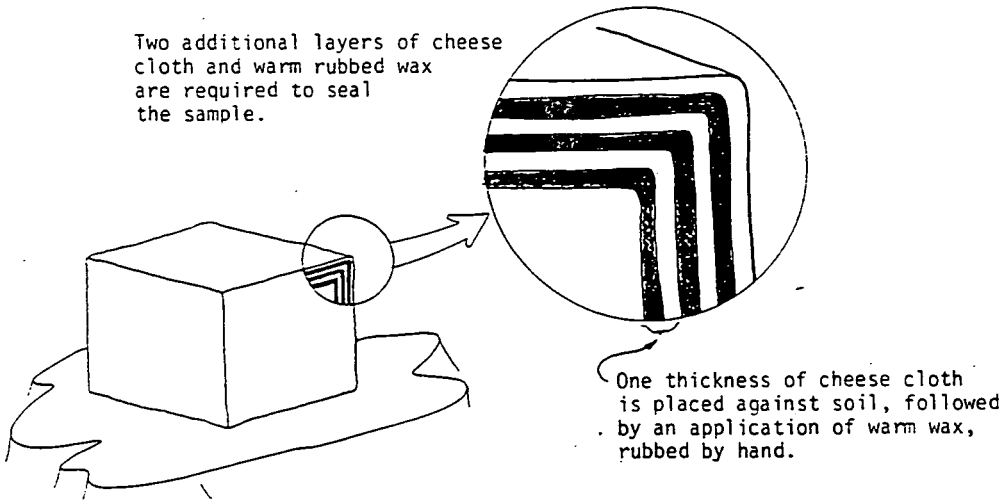

A. METHOD FOR SEALING HAND-CUT UNDISTURBED SAMPLES

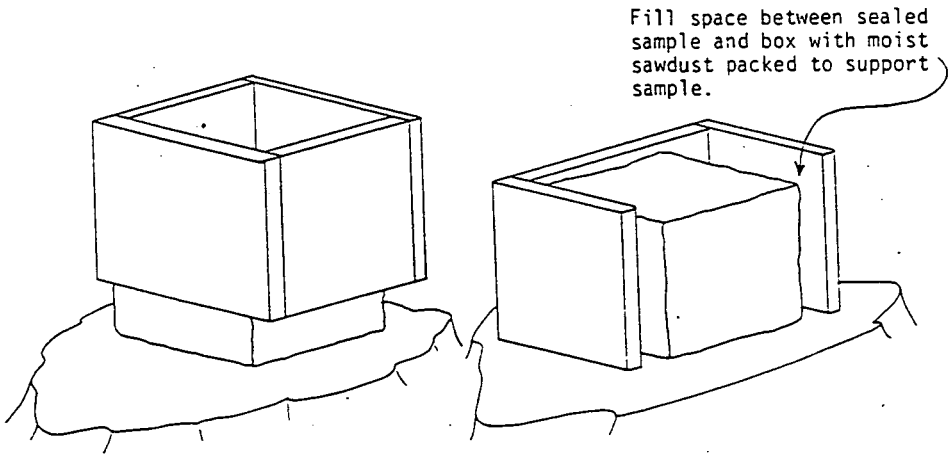

B. ENCASE EASILY DISTURBED SAMPLES IN BOX PRIOR TO CUTTING

Box constructed with 1/2"-3/4" (13 - 19 mm) exterior plywood.

FIG. 7 Preparing and Packaging a Block Sample

The American Society for Testing and Materials takes no position respecting the validity of any patent rights asserted in connection with any item mentioned in this standard. Users of this standard are expressly advised that determination of the validity of any such patent rights, and the risk of infringement of such rights, are entirely their own responsibility.

This standard is subject to revision at any time by the responsible technical committee and must be reviewed every five years and if not revised, either reapproved or withdrawn. Your comments are invited either for revision of this standard or for additional standards and should be addressed to ASTM Headquarters. Your comments will receive careful consideration at a meeting of the responsible technical committee, which you may attend. If you feel that your comments have not received a fair hearing you should make your views known to the ASTM Committee on Standards, 1916 Race St., Philadelphia, PA 19103.

237

Designation: D 4318 – 84

Standard Test Method for Liquid Limit, Plastic Limit, and Plasticity Index of Soils[1]

This standard is issued under the fixed designation D 4318; the number immediately following the designation indicates the year of original adoption or, in the case of revision, the year of last revision. A number in parentheses indicates the year of last reapproval. A superscript epsilon (ε) indicates an editorial change since the last revision or reapproval.

This standard has been approved for use by agencies of the Department of Defense. Consult the DoD Index of Specifications and Standards for the specific year of issue which has been adopted by the Department of Defense.

1. Scope

1.1 This test method covers the determination of the liquid limit, plastic limit, and the plasticity index of soils as defined in Section 3.

1.1.1 Two procedures for preparing test specimens and two procedures for performing the liquid limit are provided as follows:

A Multipoint test using a wet preparation procedure, described in Sections 10.1, 11, and 12.

B Multipoint test using a dry preparation procedure, described in Sections 10.2, 11, and 12.

C One-point test using a wet preparation procedure, described in Sections 13, 14, and 15.

D One-point test using a dry preparation procedure, described in Sections 13, 14, and 15.

The procedure to be used shall be specified by the requesting authority. If no procedure is specified, Procedure A shall be used.

NOTE 1—Prior to the adoption of this test method, a curved grooving tool was specified as part of the apparatus for performing the liquid limit test. The curved tool is not considered to be as accurate as the flat tool described in 6.2 since it does not control the depth of the soil in the liquid limit cup. However, there are some data which indicate that typically the liquid limit is slightly increased when the flat tool is used instead of the curved tool.

1.1.2 The plastic limit test procedure is described in Sections 16, 17, and 18. The plastic limit test is performed on material prepared for the liquid limit test. In effect, there are two procedures for preparing test specimens for the plastic limit test.

1.1.3 The procedure for calculating the plasticity index is given in Section 19.

1.2 The liquid limit and plastic limit of soils (along with the shrinkage limit) are often collectively referred to as the Atterberg limits in recognition of their formation by Swedish soil scientist, A. Atterberg. These limits distinguish the boundaries of the several consistency states of plastic soils.

1.3 As used in this test method, soil is any natural aggregation of mineral or organic materials, mixtures of such materials, or artificial mixtures of aggregates and natural mineral and organic particles.

1.4 The multipoint liquid limit procedure is somewhat more time consuming than the one-point procedure when both are performed by experienced operators. However, the one-point procedure requires the operator to judge when the test specimen is approximately at its liquid limit. In cases where this is not done reliably, the multipoint procedure is as fast as the one-point procedure and provides additional precision due to the information obtained from additional trials. It is particularly recommended that the multipoint procedure be used by inexperienced operators.

1.5 The correlations on which the calculations of the one-point procedure are based may not be valid for certain soils, such as organic soils or soils from a marine environment. The liquid limit of these soils should therefore be determined by the multipoint procedure (Procedure A).

1.6 The liquid and plastic limits of many soils that have been allowed to dry before testing may be considerably different from values obtained on undried samples. If the liquid and plastic limits of soils are used to correlate or estimate the engineering behavior of soils in their natural moist state, samples should not be permitted to dry before testing unless data on dried samples are specifically desired.

1.7 The composition and concentration of soluble salts in a soil affect the values of the liquid and plastic limits as well as the water content values of soils (see Method D 2216). Special consideration should therefore be given to soils from a marine environment or other sources where high soluble salt concentrations may be present. The degree to which the salts present in these soils are diluted or concentrated must be given consideration if meaningful results are to be obtained.

1.8 Since the tests described herein are performed only on that portion of a soil which passes the 425-μm (No. 40) sieve, the relative contribution of this portion of the soil to the properties of the sample as a whole must be considered when using these tests to evaluate the properties of a soil.

1.9 The values stated in acceptable metric units are to be regarded as the standard. The values given in parentheses are for information only.

1.10 *This standard may involve hazardous materials, operations, and equipment. This standard does not purport to address all of the safety problems associated with its use. It is the responsibility of whoever uses this standard to consult and establish appropriate safety and health practices and determine the applicability of regulatory limitations prior to use.*

[1] This test method is under the jurisdiction of ASTM Committee D-18 on Soil and Rock and is the direct responsibility of Subcommittee D18.03 on Texture, Plasticity, and Density Characteristics of Soils.

Current edition approved Oct. 26, 1984. Published December 1984. Originally published as D 4318 – 83. Last previous edition D 4318 – 83ε1.

2. Referenced Documents

2.1 *ASTM Standards:*

C 702 Methods for Reducing Field Samples of Aggregate to Testing Size[2]

D 75 Practice for Sampling Aggregates[4]

D 420 Practice for Investigating and Sampling Soil and Rock for Engineering Purposes[4]

D 653 Terminology Relating to Soil, Rock, and Contained Fluids[4]

D 1241 Specification for Materials for Soil-Aggregate Subbase, Base, and Surface Courses[4]

D 2216 Method for Laboratory Determination of Water (Moisture) Content of Soil, Rock, and Soil-Aggregate Mixtures[4]

D 2240 Test Method for Rubber Property—Durometer Hardness[5]

D 2487 Test Method for Classification of Soils for Engineering Purposes[4]

D 2488 Practice for Description and Identification of Soils (Visual-Manual Procedure)[4]

D 3282 Practice for Classification of Soils and Soil-Aggregate Mixtures for Highway Construction Purposes[4]

E 11 Specification for Wire-Cloth Sieves for Testing Purposes[6]

E 319 Methods of Testing Single-Arm Balances[6]

E 898 Method of Testing Top-Loading, Direct-Reading Laboratory Scales and Balances[6]

3. Definitions

3.1 *Atterberg limits*—originally, seven "limits of consistency" of fine-grained soils were defined by Albert Atterberg. In current engineering usage, the term usually refers only to the liquid limit, plastic limit, and in some references, the shrinkage limit.

3.2 *consistency*—the relative ease with which a soil can be deformed.

3.3 *liquid limit (LL)*—the water content, in percent, of a soil at the arbitrarily defined boundary between the liquid and plastic states. This water content is defined as the water content at which a pat of soil placed in a standard cup and cut by a groove of standard dimensions will flow together at the base of the groove for a distance of 13 mm (½ in.) when subjected to 25 shocks from the cup being dropped 10 mm in a standard liquid limit apparatus operated at a rate of 2 shocks per second.

NOTE 2—The undrained shear strength of soil at the liquid limit is considered to be 2 ± 0.2 kPa (0.28 psi).

3.4 *plastic limit (PL)*—the water content, in percent, of a soil at the boundary between the plastic and brittle states. The water content at this boundary is the water content at which a soil can no longer be deformed by rolling into 3.2 mm (⅛ in.) in diameter threads without crumbling.

3.5 *plastic soil*—a soil which has a range of water content over which it exhibits plasticity and which will retain its shape on drying.

3.6 *plasticity index (PI)*—the range of water content over which a soil behaves plastically. Numerically, it is the difference between the liquid limit and the plastic limit.

3.7 *liquidity index*—the ratio, expressed as a percenta[illegible] of (*1*) the natural water content of a soil minus its pla[illegible] limit, to (*2*) its plasticity index.

3.8 *activity number (A)*—the ratio of (*1*) the plasticity index of a soil to (*2*) the percent by weight of particles having an equivalent diameter smaller than 0.002 mm.

4. Summary of Method

4.1 The sample is processed to remove any material retained on a 425-µm (No. 40) sieve. The liquid limit is determined by performing trials in which a portion of the sample is spread in a brass cup, divided in two by a grooving tool, and then allowed to flow together from the shocks caused by repeatedly dropping the cup in a standard mechanical device. The multipoint liquid limit, Procedures A and B, requires three or more trials over a range of water contents to be performed and the data from the trials plotted or calculated to make a relationship from which the liquid limit is determined. The one-point liquid limit, Procedures C and D, uses the data from two trials at one water content multiplied by a correction factor to determine the liquid limit.

4.2 The plastic limit is determined by alternately pressing together and rolling into a 3.2 mm (⅛ in.) diameter thread a small portion of plastic soil until its water content is reduced to a point at which the thread crumbles and is no longer able to be pressed together and rerolled. The water content of the soil at this stage is reported as the plastic limit.

4.3 The plasticity index is calculated as the dif[illegible] between the liquid limit and the plastic limit.

5. Significance and Use

5.1 This test method is used as an integral part of several engineering classification systems to characterize the fine-grained fractions of soils (see Test Method D 2487 and Practice D 3282) and to specify the fine-grained fraction of construction materials (see Specification D 1241). The liquid limit, plastic limit, and plasticity index of soils are also used extensively, either individually or together with other soil properties to correlate with engineering behavior such as compressibility, permeability, compactibility, shrink-swell, and shear strength.

5.2 The liquid and plastic limits of a soil can be used with the natural water content of the soil to express its relative consistency or liquidity index and can be used with the percentage finer than 2-µm size to determine its activity number.

5.3 The one-point liquid limit procedure is frequently used for routine classification purposes. When greater precision is required, as when used for the acceptance of a material or for correlation with other test data, the multipoint procedure should be used.

5.4 These methods are sometimes used to evaluate the weathering characteristics of clay-shale materials. When subjected to repeated wetting and drying cycles, the l[illegible] limits of these materials tend to increase. The a[illegible] increase is considered to be a measure of a shale[illegible] bility to weathering.

[2] *Annual Book of ASTM Standards*, Vol 04.02.
[3] *Annual Book of ASTM Standards*, Vols 04.02, 04.03, and 04.08.
[4] *Annual Book of ASTM Standards*, Vol 04.08.
[5] *Annual Book of ASTM Standards*, Vol 09.01.
[6] *Annual Book of ASTM Standards*, Vol 14.02.

239

5.5 The liquid limit of a soil containing substantial amounts of organic matter decreases dramatically when the soil is oven-dried before testing. Comparison of the liquid limit of a sample before and after oven-drying can therefore be used as a qualitative measure of organic matter content of a soil.

6. Apparatus

6.1 *Liquid Limit Device*—A mechanical device consisting of a brass cup suspended from a carriage designed to control its drop onto a hard rubber base. A drawing showing the essential features of the device and the critical dimensions is given in Fig. 1. The design of the device may vary provided that the essential functions are preserved. The device may be operated either by a hand crank or by an electric motor.

6.1.1 *Base*—The base shall be hard rubber having a D Durometer hardness of 80 to 90, and a resilience such that an 8-mm (5/16-in.) diameter polished steel ball, when dropped from a height of 25 cm (9.84 in.) will have an average rebound of at least 80 % but no more than 90 %. The tests shall be conducted on the finished base with feet attached.

6.1.2 *Feet*—The base shall be supported by rubber feet designed to provide isolation of the base from the work surface and having an A Durometer hardness no greater than 60 as measured on the finished feet attached to the base.

6.1.3 *Cup*—The cup shall be brass and have a weight, including cup hanger, of 185 to 215 g.

6.1.4 *Cam*—The cam shall raise the cup smoothly and continuously to its maximum height, over a distance of at least 180° of cam rotation. The preferred cam motion is a uniformly accelerated lift curve. The design of the cam and follower combination shall be such that there is no upward or downward velocity of the cup when the cam follower leaves the cam.

NOTE 3—The cam and follower design in Fig. 1 is for uniformly accelerated (parabolic) motion after contact and assures that the cup has no velocity at drop off. Other cam designs also provide this feature and may be used. However, if the cam-follower lift pattern is not known, zero velocity at drop off can be assured by carefully filing or machining the cam and follower so that the cup height remains constant over the last 20 to 45° of cam rotation.

6.1.5 *Carriage*—The cup carriage shall be constructed in a way that allows convenient but secure adjustment of the height of drop of the cup to 10 mm (0.394 in.). The cup hanger shall be attached to the carriage by means of a pin which allows removal of the cup and cup hanger for cleaning and inspection.

6.1.6 *Optional Motor Drive*—As an alternative to the hand crank shown in Fig. 1, the device may be equipped with a motor to turn the cam. Such a motor must turn the cam at 2 ± 0.1 revolutions per second and must be isolated from the rest of the device by rubber mounts or in some other way that prevents vibration from the motor being transmitted to the rest of the apparatus. It must be equipped with an ON-OFF switch and a means of conveniently positioning the cam for height of drop adjustments. The results obtained using a motor-driven device must not differ from those obtained using a manually operated device.

DIMENSIONS

LETTER	A△	B△	C△	E△	F	G	H	J△	K△	L△	M△
MM	54 ± 0.5	2 ± 0.1	27 ± 0.5	56 ± 2.0	32	10	16	60 ± 1.0	50 ± 2.0	150 ± 2.0	125 ± 2.0

LETTER	N	P	R	T	U△	V	W	Z
MM	24	28	24	45	47 ± 1.0	3.8	13	6.5

△ ESSENTIAL DIMENSIONS

CAM ANGLE DEGREES	CAM RADIUS
0	0.742 R
30	0.753 R
60	0.764 R
90	0.773 R
120	0.784 R
150	0.796 R
180	0.818 R
210	0.854 R
240	0.901 R
270	0.945 R
300	0.974 R
330	0.995 R
360	1.000 R

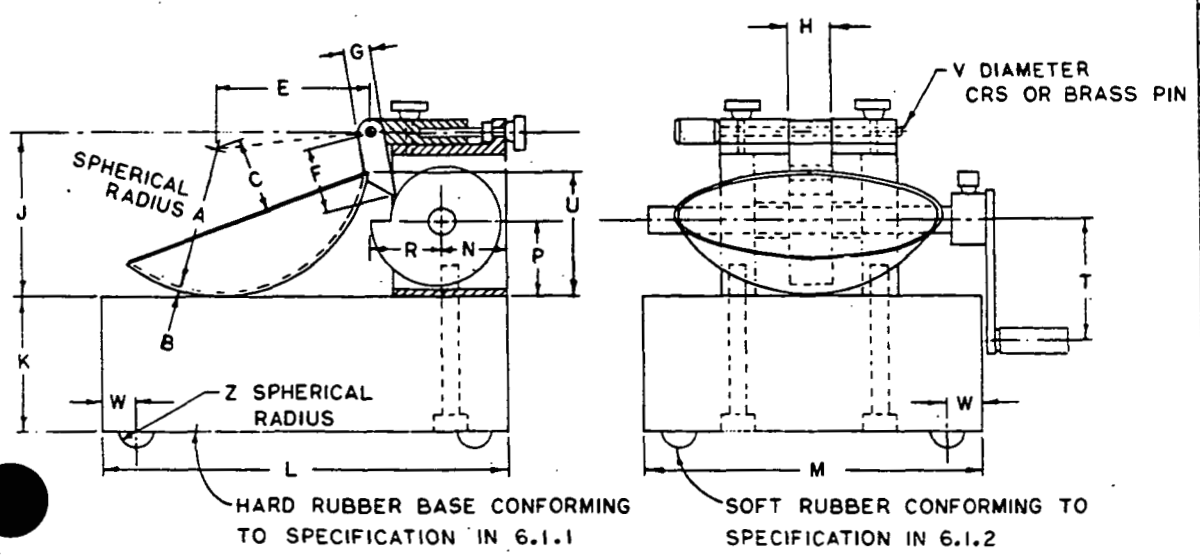

FIG. 1 Hand-Operated Liquid Limit Device

DIMENSIONS

LETTER	A△	B△	C△	D△	E△	F△
MM	2 ±0.1	11 ±0.2	40 ±0.5	8 ±0.1	50 ±0.5	2 ±0.1
LETTER	G	H	J	K△	L△	N
MM	10 MINIMUM	13	60	10 ±0.05	60 DEG ±1 DEG	20

△ ESSENTIAL DIMENSIONS

□ BACK AT LEAST 15 MM FROM TIP

NOTE: DIMENSION A SHOULD BE 1.9–2.0 AND DIMENSION D SHOULD BE 8.0–8.1 WHEN NEW TO ALLOW FOR ADEQUATE SERVICE LIFE

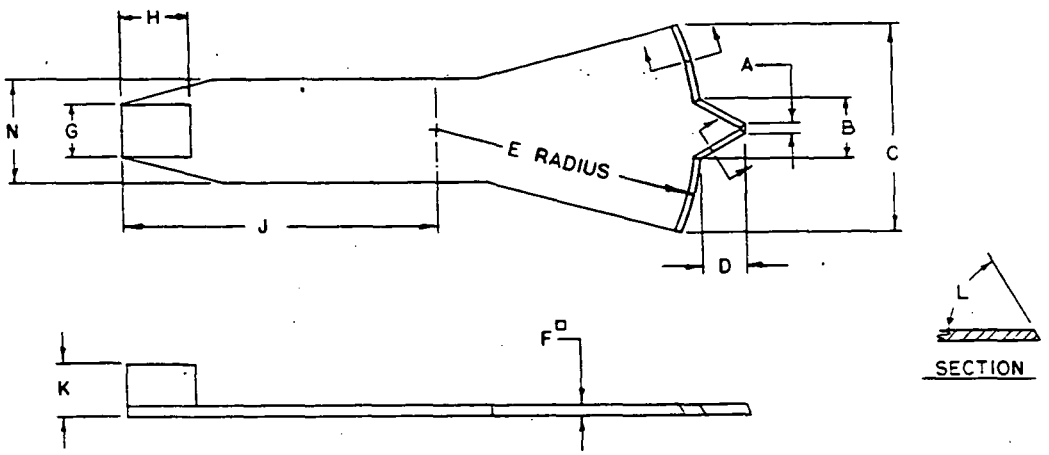

FIG. 2 Grooving Tool (Optional Height-of-Drop Gage Attached)

6.2 *Flat Grooving Tool*—A grooving tool having dimensions shown in Fig. 2. The tool shall be made of plastic or noncorroding metal. The design of the tool may vary as long as the essential dimensions are maintained. The tool may, but need not, incorporate the gage for adjusting the height of drop of the liquid limit device.

6.3 *Gage*—A metal gage block for adjusting the height of drop of the cup, having the dimensions shown in Fig. 3. The design of the tool may vary provided the gage will rest securely on the base without being susceptible to rocking, and the edge which contacts the cup during adjustment is straight, at least 10 mm (⅜ in.) wide, and without bevel or radius.

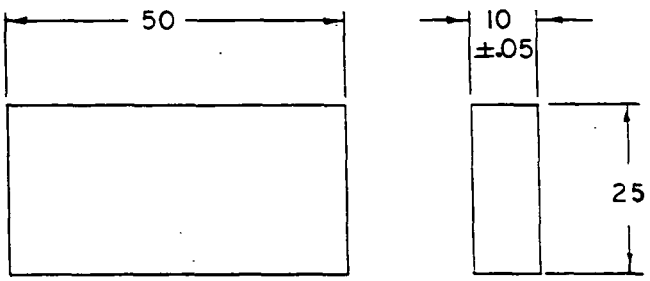

DIMENSIONS IN MILLIMETRES

FIG. 3 Height of Drop Gage

6.4 *Containers*—Small corrosion-resistant containers with snug-fitting lids for water content specimens. Aluminum or stainless steel cans 2.5 cm (1 in.) high by 5 cm (2 in.) in diameter are appropriate.

6.5 *Balance*—A balance readable to at least 0.01 g and having an accuracy of 0.03 g within three standard deviations within the range of use. Within any 15-g range, a difference between readings shall be accurate within 0.01 g (Notes 4 and 5).

NOTE 4—See Methods E 898 and E 319 for an explanation of terms relating to balance performance.

NOTE 5—For frequent use, a top-loading type balance with automatic load indication, readable to 0.01 g, and having an index of precision (standard deviation) of 0.003 or better is most suitable for this method. However, nonautomatic indicating equal-arm analytical balances and some small equal arm top pan balances having readabilities and sensitivities of 0.002 g or better provide the required accuracy when used with a weight set of ASTM Class 4 (National Bureau of Standards Class P) or better. Ordinary commercial and classroom type balances such as beam balances are not suitable for this method.

6.6 *Storage Container*—A container in which to store the prepared soil specimen that will not contaminate the specimen in any way, and which prevents moisture loss, porcelain, glass, or plastic dish about 11.4 cm (4½ diameter and a plastic bag large enough to enclose the dish and be folded over is adequate.

241

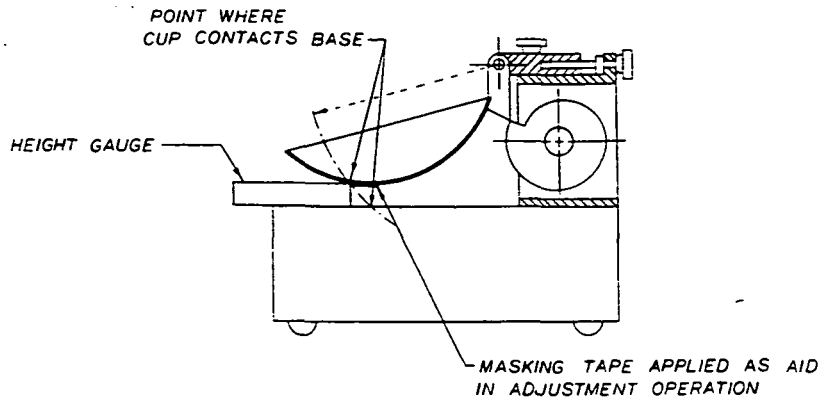

FIG. 4 Calibration for Height of Drop

6.7 *Ground Glass Plate*—A ground glass plate at least 30 cm (12 in.) square by 1 cm (⅜ in.) thick for mixing soil and rolling plastic limit threads.

6.8 *Spatula*—A spatula or pill knife having a blade about 2 cm (¾ in.) wide by about 10 cm (4 in.) long. In addition, a spatula having a blade about 2.5 cm (1 in.) wide and 15 cm (6 in.) long has been found useful for initial mixing of samples.

6.9 *Sieve*—A 20.3 cm (8 in.) diameter, 425-µm (No. 40) sieve conforming to the requirements of Specification E 11 and having a rim at least 5 cm (2 in.) above the mesh. A 2-mm (No. 10) sieve meeting the same requirements may also be needed.

6.10 *Wash Bottle*, or similar container for adding controlled amounts of water to soil and washing fines from coarse particles.

6.11 *Drying Oven*—A thermostatically controlled oven, preferably of the forced-draft type, capable of continuously maintaining a temperature of 110 ± 5°C throughout the drying chamber. The oven shall be equipped with a thermometer of suitable range and accuracy for monitoring oven temperature.

6.12 *Washing Pan*—A round, flat-bottomed pan at least 7.6 cm (3 in.) deep, slightly larger at the bottom than a 20.3-cm (8-in.) diameter sieve.

6.13 *Rod* (optional)—A metal or plastic rod or tube 3.2 mm (⅛ in.) in diameter and about 10 cm (4 in.) long for judging the size of plastic limit threads.

7. Materials

7.1 A supply of distilled or demineralized water.

8. Sampling

8.1 Samples may be taken from any location that satisfies testing needs. However, Methods C 702, Practice D 75, and Recommended Practice D 420 should be used as guides for selecting and preserving samples from various types of sampling operations. Samples which will be prepared using the wet preparation procedure, 10.1, must be kept at their natural water content prior to preparation.

8.2 Where sampling operations have preserved the natural stratification of a sample, the various strata must be kept separated and tests performed on the particular stratum of interest with as little contamination as possible from other strata. Where a mixture of materials will be used in construction, combine the various components in such proportions that the resultant sample represents the actual construction case.

8.3 Where data from this test method are to be used for correlation with other laboratory or field test data, use the same material as used for these tests where possible.

8.4 Obtain a representative portion from the total sample sufficient to provide 150 to 200 g of material passing the 425-µm (No. 40) sieve. Free flowing samples may be reduced by the methods of quartering or splitting. Cohesive samples shall be mixed thoroughly in a pan with a spatula, or scoop and a representative portion scooped from the total mass by making one or more sweeps with a scoop through the mixed mass.

9. Calibration of Apparatus

9.1 *Inspection of Wear:*

9.1.1 *Liquid Limit Device*—Determine that the liquid limit device is clean and in good working order. The following specific points should be checked:

9.1.1.1 *Wear of Base*—The spot on the base where the cup makes contact should be worn no greater than 10 mm (⅜ in.) in diameter. If the wear spot is greater than this, the base can be machined to remove the worn spot provided the resurfacing does not make the base thinner than specified in 6.1 and the other dimensional relationships are maintained.

9.1.1.2 *Wear of Cup*—The cup must be replaced when the grooving tool has worn a depression in the cup 0.1 mm (0.004 in.) deep or when the edge of the cup has been reduced to half its original thickness. Verify that the cup is firmly attached to the cup hanger.

9.1.1.3 *Wear of Cup Hanger*—Verify that the cup hanger pivot does not bind and is not worn to an extent that allows more than 3-mm (⅛-in.) side-to-side movement of the lowest point on the rim.

9.1.1.4 *Wear of Cam*—The cam shall not be worn to an extent that the cup drops before the cup hanger (cam follower) loses contact with the cam.

9.1.2 *Grooving Tools*—Inspect grooving tools for wear on a frequent and regular basis. The rapidity of wear depends on the material from which the tool is made and the types of soils being tested. Sandy soils cause rapid wear of grooving tools; therefore, when testing these materials, tools should be inspected more frequently than for other soils. Any tool with a tip width greater than 2.1 mm must not be used. The depth

of the tip of the grooving tool must be 7.9 to 8.1 mm.

NOTE 6—The width of the tip of grooving tools is conveniently checked using a pocket-sized measuring magnifier equipped with a millimetre scale. Magnifiers of this type are available from most laboratory supply companies. The depth of the tip of grooving tools can be checked using the depth measuring feature of vernier calipers.

9.2 *Adjustment of Height of Drop*—Adjust the height of drop of the cup so that the point on the cup that comes in contact with the base rises to a height of 10 ± 0.2 mm. See Fig. 4 for proper location of the gage relative to the cup during adjustment.

NOTE 7—A convenient procedure for adjusting the height of drop is as follows: place a piece of masking tape across the outside bottom of the cup parallel with the axis of the cup hanger pivot. The edge of the tape away from the cup hanger should bisect the spot on the cup that contacts the base. For new cups, placing a piece of carbon paper on the base and allowing the cup to drop several times will mark the contact spot. Attach the cup to the device and turn the crank until the cup is raised to its maximum height. Slide the height gage under the cup from the front, and observe whether the gage contacts the cup or the tape. See Fig. 4. If the tape and cup are both contacted, the height of drop is approximately correct. If not, adjust the cup until simultaneous contact is made. Check adjustment by turning the crank at 2 revolutions per second while holding the gage in position against the tape and cup. If a ringing or clicking sound is heard without the cup rising from the gage, the adjustment is correct. If no ringing is heard or if the cup rises from the gage, readjust the height of drop. If the cup rocks on the gage during this checking operation, the cam follower pivot is excessively worn and the worn parts should be replaced. Always remove tape after completion of adjustment operation.

MULTIPOINT LIQUID LIMIT—PROCEDURES A AND B

10. Preparation of Test Specimens

10.1 *Wet Preparation*—Except where the dry method of specimen preparation is specified (10.2), prepare specimens for test as described in the following sections.

10.1.1 *Samples Passing the 425-µm (No. 40) Sieve*—When by visual and manual procedures it is determined that the sample has little or no material retained on a 425-µm (No. 40) sieve, prepare a specimen of 150 to 200 g by mixing thoroughly with distilled or demineralized water on the glass plate using the spatula. If desired, soak soil in a storage dish with small amount of water to soften the soil before the start of mixing. Adjust the water content of the soil to bring it to a consistency that would require 25 to 35 blows of the liquid limit device to close the groove (Note 8). If, during mixing, a small percentage of material is encountered that would be retained on a 425-µm (No. 40) sieve, remove these particles by hand, if possible. If it is impractical to remove the coarser material by hand, remove small percentages (less than about 15 %) of coarser material by working the specimen through a 425-µm (No. 40) sieve using a piece of rubber sheeting, rubber stopper, or other convenient device provided the operation does not distort the sieve or degrade material that would be retained if the washing method described in 10.1.2 were used. If larger percentages of coarse material are encountered during mixing, or it is considered impractical to remove the coarser material by the methods just described, wash the sample as described in 10.1.2. When the coarse particles found during mixing are concretions, shells, or other fragile particles, do not crush these particles to make them pass a 425-µm (No. 40) sieve, but remove by hand or by washing. Place the mixed soil in the storage dish, cover to prevent loss of moisture, and allow to stand for at least 16 h (overnight). After the standing period and immediately before starting the test, thoroughly remix the soil.

NOTE 8—The time taken to adequately mix a soil will vary great[illegible] depending on the plasticity and initial water content. Initial mix[illegible] times of more than 30 min may be needed for stiff, fat clays.

10.1.2 *Samples Containing Material Retained on a 425-µm (No. 40) Sieve:*

10.1.2.1 Select a sufficient quantity of soil at natural water content to provide 150 to 200 g of material passing the 425-µm (No. 40) sieve. Place in a pan or dish and add sufficient water to cover the soil. Allow to soak until all lumps have softened and the fines no longer adhere to the surfaces of the coarse particles (Note 9).

NOTE 9—In some cases, the cations of salts present in tap water will exchange with the natural cations in the soil and significantly alter the test results should tap water be used in the soaking and washing operations. Unless it is known that such cations are not present in the tap water, distilled or demineralized water should be used. As a general rule, water containing more than 100 mg/L of dissolved solids should not be used for washing operations.

10.1.2.2 When the sample contains a large percentage of material retained on the 425-µm (No. 40) sieve, perform the following washing operation in increments, washing no more than 0.5 kg (1 lb) of material at one time. Place the 425-µm (No. 40) sieve in the bottom of the clean pan. Pour the soil water mixture onto the sieve. If gravel or coarse sand particles are present, rinse as many of these as possible with small quantities of water from a wash bottle, and discard. Alternatively, pour the soil water mixture over a 2-mm (No. 10) sieve nested atop the 425-µm (No. 40) sieve, rins[illegible] fine material through and remove the 2-mm (No. 10) s[illegible] After washing and removing as much of the coarser material as possible, add sufficient water to the pan to bring the level to about 13 mm (½ in.) above the surface of the 425-µm (No. 40) sieve. Agitate the slurry by stirring with the fingers while raising and lowering the sieve in the pan and swirling the suspension so that fine material is washed from the coarser particles. Disaggregate fine soil lumps that have not slaked by gently rubbing them over the sieve with the fingertips. Complete the washing operation by raising the sieve above the water surface and rinsing the material retained with a small amount of clean water. Discard material retained on the 425-µm (No. 40) sieve.

10.1.2.3 Reduce the water content of the material passing the 425-µm (No. 40) sieve until it approaches the liquid limit. Reduction of water content may be accomplished by one or a combination of the following methods: (*a*) exposing the air currents at ordinary room temperature, (*b*) exposing to warm air currents from a source such as an electric hair dryer, (*c*) filtering in a Büchner funnel or using filter candles, (*d*) decanting clear water from surface of suspension, or (*e*) draining in a colander or plaster of paris dish lined with high retentivity, high wet-strength filter paper.[7] If a plaster of paris dish is used, take care that the dish never becomes sufficiently saturated that it fails to actively absorb water into its surface. Thoroughly dry dishes between uses. During evaporation and cooling, stir the sample often enough to prev[illegible]

[7] S and S 595 filter paper available in 32-cm circles, has proven satis[illegible]y.

243

overdrying of the fringes and soil pinnacles on the surface of the mixture. For soil samples containing soluble salts, use a method of water reduction such as *a* or *b* that will not eliminate the soluble salts from the test specimen.

10.1.2.4 Thoroughly mix the material passing the 425-µm (No. 40) sieve on the glass plate using the spatula. Adjust the water content of the mixture, if necessary, by adding small increments of distilled or demineralized water or by allowing the mixture to dry at room temperature while mixing on the glass plate. The soil should be at a water content that will result in closure of the groove in 25 to 35 blows. Return the mixed soil to the mixing dish, cover to prevent loss of moisture, and allow to stand for at least 16 h. After the standing period, and immediately before starting the test, remix the soil thoroughly.

10.2 *Dry Preparation:*

10.2.1 Select sufficient soil to provide 150 to 200 g of material passing the 425-µm (No. 40) sieve after processing. Dry the sample at room temperature or in an oven at a temperature not exceeding 60°C until the soil clods will pulverize readily. Disaggregation is expedited if the sample is not allowed to completely dry. However, the soil should have a dry appearance when pulverized. Pulverize the sample in a mortar with a rubber tipped pestle or in some other way that does not cause breakdown of individual grains. When the coarse particles found during pulverization are concretions, shells, or other fragile particles, do not crush these particles to make them pass a 425-µm (No. 40) sieve, but remove by hand or other suitable means, such as washing.

10.2.2 Separate the sample on a 425-µm (No. 40) sieve, shaking the sieve by hand to assure thorough separation of the finer fraction. Return the material retained on the 425-µm (No. 40) sieve to the pulverizing apparatus and repeat the pulverizing and sieving operations as many times as necessary to assure that all finer material has been disaggregated and material retained on the 425-µm (No. 40) sieve consists only of individual sand or gravel grains.

10.2.3 Place material remaining on the 425-µm (No. 40) sieve after the final pulverizing operations in a dish and soak in a small amount of water. Stir the soil water mixture and pour over the 425-µm (No. 40) sieve, catching the water and any suspended fines in the washing pan. Pour this suspension into a dish containing the dry soil previously sieved through the 425-µm (No. 40) sieve. Discard material retained on the 425-µm (No. 40) sieve.

10.2.4 Adjust the water content as necessary by drying as described in 10.1.2.3 or by mixing on the glass plate, using the spatula while adding increments of distilled or demineralized water, until the soil is at a water content that will result in closure of the groove in 25 to 35 blows.

10.2.5 Put soil in the storage dish, cover to prevent loss of moisture and allow to stand for at least 16 h. After the standing period, and immediately before starting the test, thoroughly remix the soil (Note 8).

11. Procedure

11.1 Place a portion of the prepared soil in the cup of the liquid limit device at the point where the cup rests on the base, squeeze it down, and spread it into the cup to a depth of about 10 mm at its deepest point, tapering to form an approximately horizontal surface. Take care to eliminate air bubbles from the soil pat but form the pat with as few strokes as possible. Heap the unused soil on the glass plate and cover with the inverted storage dish or a wet towel.

11.2 Form a groove in the soil pat by drawing the tool, beveled edge forward, through the soil on a line joining the highest point to the lowest point on the rim of the cup. When cutting the groove, hold the grooving tool against the surface of the cup and draw in an arc, maintaining the tool perpendicular to the surface of the cup throughout its

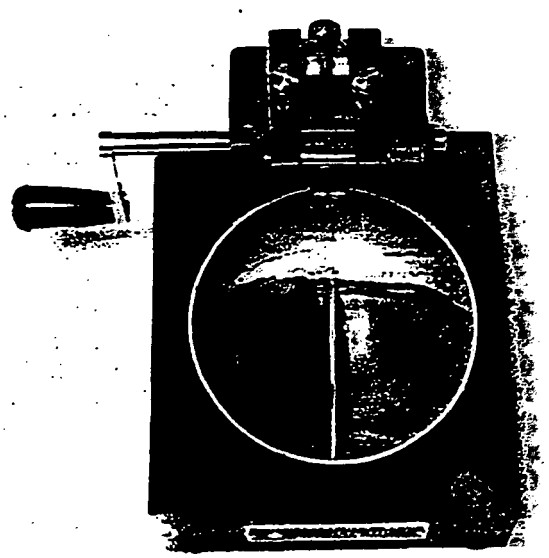

FIG. 5 Grooved Soil Pat in Liquid Limit Device

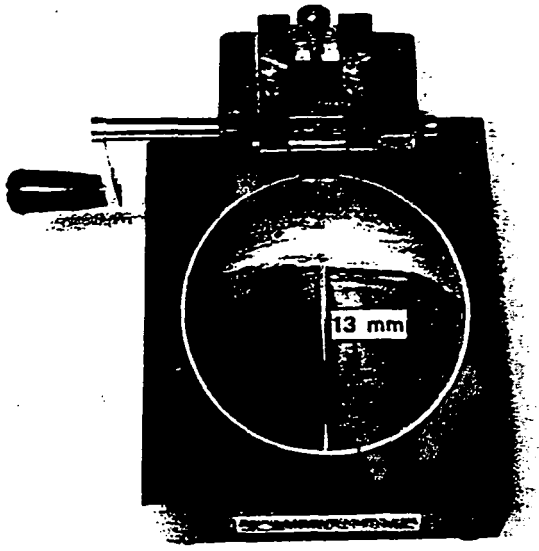

FIG. 6 Soil Pat After Groove Has Closed

movement. See Fig. 5. In soils where a groove cannot be made in one stroke without tearing the soil, cut the groove with several strokes of the grooving tool. Alternatively, cut the groove to slightly less than required dimensions with a spatula and use the grooving tool to bring the groove to final dimensions. Exercise extreme care to prevent sliding the soil pat relative to the surface of the cup.

11.3 Verify that no crumbs of soil are present on the base or the underside of the cup. Lift and drop the cup by turning the crank at a rate of 1.9 to 2.1 drops per second until the two halves of the soil pat come in contact at the bottom of the groove along a distance of 13 mm (½ in.). See Fig. 6.

NOTE 10—Use the end of the grooving tool, Fig. 2, or a scale to verify that the groove has closed 13 mm (½ in.).

11.4 Verify that an air bubble has not caused premature closing of the groove by observing that both sides of the groove have flowed together with approximately the same shape. If a bubble has caused premature closing of the groove, reform the soil in the cup, adding a small amount of soil to make up for that lost in the grooving operation and repeat 11.1 to 11.3. If the soil slides on the surface of the cup, repeat 11.1 through 11.3 at a higher water content. If, after several trials at successively higher water contents, the soil pat continues to slide in the cup or if the number of blows required to close the groove is always less than 25, record that the liquid limit could not be determined, and report the soil as nonplastic without performing the plastic limit test.

11.5 Record the number of drops, N, required to close the groove. Remove a slice of soil approximately the width of the spatula, extending from edge to edge of the soil cake at right angles to the groove and including that portion of the groove in which the soil flowed together, place in a weighed container, and cover.

11.6 Return the soil remaining in the cup to the glass plate. Wash and dry the cup and grooving tool and reattach the cup to the carriage in preparation for the next trial.

11.7 Remix the entire soil specimen on the glass plate adding distilled water to increase the water content of the soil and decrease the number of blows required to close the groove. Repeat 11.1 through 11.6 for at least two additional trials producing successively lower numbers of blows to close the groove. One of the trials shall be for a closure requiring 25 to 35 blows, one for closure between 20 and 30 blows, and one trial for a closure requiring 15 to 25 blows.

11.8 Determine the water content, W_N, of the soil specimen from each trial in accordance with Method D 2216. Make all weighings on the same balance. Initial weighings should be performed immediately after completion of the test. If the test is to be interrupted for more than about 15 min, the specimens already obtained should be weighed at the time of the interruption.

12. Calculations

12.1 Plot the relationship between the water content, W_N, and the corresponding number of drops, N, of the cup on a semilogarithmic graph with the water content as ordinates on the arithmetical scale, and the number of drops as abscissas on the logarithmic scale. Draw the best straight line through the three or more plotted points.

12.2 Take the water content corresponding to the intersection of the line with the 25-drop abscissa as the liquid limit of the soil. Computational methods may be substituted for the graphical method for fitting a straight line to the data and determining the liquid limit.

ONE-POINT LIQUID LIMIT—PROCEDURES C AND D

13. Preparation of Test Specimens

13.1 Prepare the specimen in the same manner as described in Section 10, except that at mixing, adjust the water content to a consistency requiring 20 to 30 drops of the

245

TABLE 1 Factors for Obtaining Liquid Limit from Water Content and Number of Drops Causing Closure of Groove

N (Number of Drops)	K (Factor for Liquid Limit)
20	0.974
21	0.979
22	0.985
23	0.990
24	0.995
25	1.000
26	1.005
27	1.009
28	1.014
29	1.018
30	1.022

liquid limit cup to close the groove.

14. Procedure

14.1 Proceed as described in 11.1 through 11.5 except that the number of blows required to close the groove shall be 20 to 30. If less than 20 or more than 30 blows are required, adjust the water content of the soil and repeat the procedure.

14.2 Immediately after removing a water content specimen as described in 11.5, reform the soil in the cup, adding a small amount of soil to make up for that lost in the grooving and water content sampling operations. Repeat 11.2 through 11.5, and, if the second closing of the groove requires the same number of drops or no more than two drops difference, secure another water content specimen. Otherwise, remix the entire specimen and repeat.

NOTE 11—Excessive drying or inadequate mixing will cause the number of blows to vary.

14.3 Determine water contents of specimens as described in 11.8.

15. Calculations

15.1 Determine the liquid limit for each water content specimen using one of the following equations:

$$LL = W_N \left(\frac{N}{25}\right)^{0.121} \quad \text{or}$$

$$LL = K(W_N)$$

where:

N = the number of blows causing closure of the groove at water content,

W_N = water content, and

K = a factor given in Table 1.

The liquid limit is the average of the two trial liquid limit values.

15.2 If the difference between the two trial liquid limit values is greater than one percentage point, repeat the test.

PLASTIC LIMIT

16. Preparation of Test Specimen

16.1 Select a 20-g portion of soil from the material prepared for the liquid limit test, either after the second mixing before the test, or from the soil remaining after completion of the test. Reduce the water content of the soil to a consistency at which it can be rolled without sticking to the hands by spreading and mixing continuously on the glass plate. The drying process may be accelerated by exposing the soil to the air current from an electric fan, or by blotting with paper that does not add any fiber to the soil, such as hard surface paper toweling or high wet-strength filter paper.

17. Procedure

17.1 From the 20-g mass, select a portion of 1.5 to 2.0 g. Form the test specimen into an ellipsoidal mass. Roll this mass between the palm or fingers and the ground-glass plate with just sufficient pressure to roll the mass into a thread of uniform diameter throughout its length (Note 12). The thread shall be further deformed on each stroke so that its diameter is continuously reduced and its length extended until the diameter reaches 3.2 ± 0.5 mm (0.125 ± .020 in.), taking no more than 2 min (Note 13). The amount of hand or finger pressure required will vary greatly, according to the soil. Fragile soils of low plasticity are best rolled under the outer edge of the palm or at the base of the thumb.

NOTE 12—A normal rate of rolling for most soils should be 80 to 90 strokes per minute, counting a stroke as one complete motion of the hand forward and back to the starting position. This rate of rolling may have to be decreased for very fragile soils.

NOTE 13—A 3.2-mm (⅛-in.) diameter rod or tube is useful for frequent comparison with the soil thread to ascertain when the thread has reached the proper diameter, especially for inexperienced operators.

17.1.1 When the diameter of the thread becomes 3.2 mm, break the thread into several pieces. Squeeze the pieces together, knead between the thumb and first finger of each hand, reform into an ellipsoidal mass, and reroll. Continue this alternate rolling to a thread 3.2 mm in diameter, gathering together, kneading and rerolling, until the thread crumbles under the pressure required for rolling and the soil can no longer be rolled into a 3.2-mm diameter thread (See Fig. 7). It has no significance if the thread breaks into threads of shorter length. Roll each of these shorter threads to 3.2 mm in diameter. The only requirement for continuing the test is that they are able to be reformed into an ellipsoidal mass and rolled out again. The operator shall at no time attempt to produce failure at exactly 3.2 mm diameter by allowing the thread to reach 3.2 mm, then reducing the rate of rolling or the hand pressure, or both, while continuing the rolling without further deformation until the thread falls apart. It is permissible, however, to reduce the total amount of deformation for feebly plastic soils by making the initial diameter of the ellipsoidal mass nearer to the required 3.2-mm final diameter. If crumbling occurs when the thread has a diameter greater than 3.2 mm, this shall be considered a satisfactory end point, provided the soil has been previously rolled into a thread 3.2 mm in diameter. Crumbling of the thread will manifest itself differently with the various types of soil. Some soils fall apart in numerous small aggregations of particles, others may form an outside tubular layer that starts splitting at both ends. The splitting progresses toward the middle, and finally, the thread falls apart in many small platy particles. Fat clay soils require much pressure to deform the thread, particularly as they approach the plastic limit. With these soils, the thread breaks into a series of barrel-shaped segments about 3.2 to 9.5 mm (⅛ to ⅜ in.) in length.

17.2 Gather the portions of the crumbled thread together and place in a weighed container. Immediately cover the container.

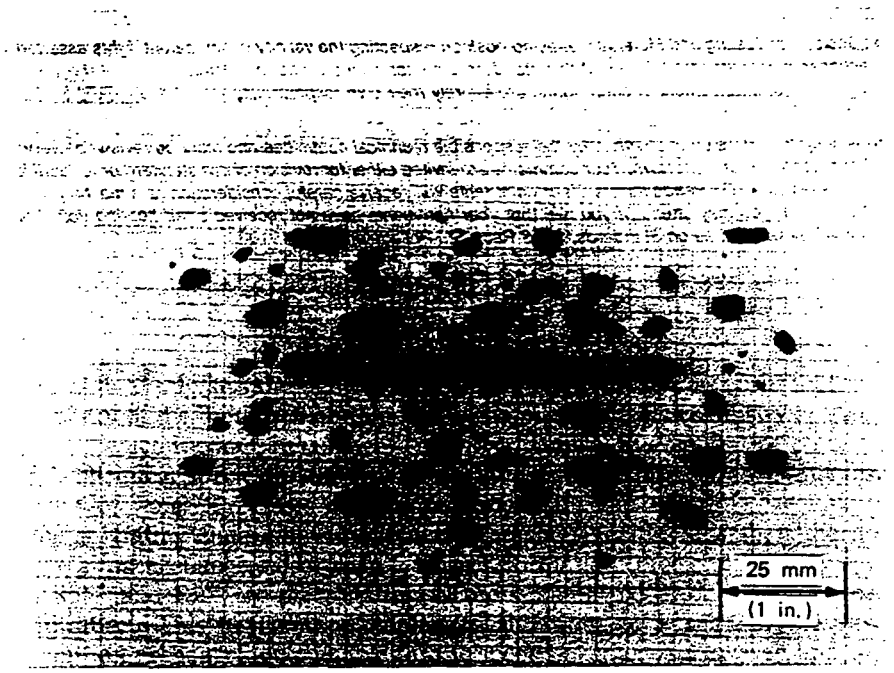

FIG. 7 Lean Clay Soil at the Plastic Limit

17.3 Select another 1.5 to 2.0 g portion of soil from the original 20-g specimen and repeat the operations described in 17.1 and 17.2 until the container has at least 6 g of soil.

17.4 Repeat 17.1 through 17.3 to make another container holding at least 6 g of soil. Determine the water content, in percent, of the soil contained in the containers in accordance with Method D 2216. Make all weighings on the same balance.

NOTE 14—The intent of performing two plastic limit trials is to verify the consistency of the test results. It is acceptable practice to perform only one plastic limit trial when the consistency in the test results can be confirmed by other means.

18. Calculations

18.1 Compute the average of the two water contents. If the difference between the two water contents is greater than two percentage points, repeat the test. The plastic limit is the average of the two water contents.

PLASTICITY INDEX

19. Calculations

19.1 Calculate the plasticity index as follows:

$$PI = LL - PL$$

where:

LL = the liquid limit,

PL = the plastic limit.

Both LL and PL are whole numbers. If either the liquid limit or plastic limit could not be determined, or if the plastic limit is equal to or greater than the liquid limit, report the soil as nonplastic, NP.

20. Report

20.1 Report the following information:

20.1.1 Sample identifying information,

20.1.2 Any special specimen selection process used, such as removal of sand lenses from undisturbed sample,

20.1.3 Report sample as airdried if the sample was airdried before or during preparation,

20.1.4 Liquid limit, plastic limit, and plasticity index to the nearest whole number and omitting the percent designation. If the liquid limit or plastic limit tests could not be performed, or if the plastic limit is equal to or greater than the liquid limit, report the soil as nonplastic, NP,

20.1.5 An estimate of the percentage of sample retained on the 425-µm (No. 40) sieve, and

20.1.6 Procedure by which liquid limit was performed, if it differs from the multipoint method.

21. Precision and Bias

21.1 No interlaboratory testing program has as yet been conducted using this test method to determine multilaboratory precision.

21.2 The within laboratory precision of the results of tests performed by different operators at one laboratory on two soils using Procedure A for the liquid limit is shown in Table 2.

TABLE 2 Within Laboratory Precision for Liquid Limit

	Average Value, $\bar{x}$	Standard Deviation, s
Soil A:		
PL	21.9	1.07
LL	27.9	1.07
Soil B:		
PL	20.1	1.21
LL	32.6	0.98

247

The American Society for Testing and Materials takes no position respecting the validity of any patent rights asserted in connection with any item mentioned in this standard. Users of this standard are expressly advised that determination of the validity of any such patent rights, and the risk of infringement of such rights, are entirely their own responsibility.

This standard is subject to revision at any time by the responsible technical committee and must be reviewed every five years and if not revised, either reapproved or withdrawn. Your comments are invited either for revision of this standard or for additional standards and should be addressed to ASTM Headquarters. Your comments will receive careful consideration at a meeting of the responsible technical committee, which you may attend. If you feel that your comments have not received a fair hearing you should make your views known to the ASTM Committee on Standards, 1916 Race St., Philadelphia, PA 19103.

Designation: D 4767 – 88[ε1]

Standard Test Method for Consolidated-Undrained Triaxial Compression Test on Cohesive Soils[1]

This standard is issued under the fixed designation D 4767; the number immediately following the designation indicates the year of original adoption or, in the case of revision, the year of last revision. A number in parentheses indicates the year of last reapproval. A superscript epsilon (ε) indicates an editorial change since the last revision or reapproval.

[ε1] NOTE—Section 13 was added editorially January 1991.

1. Scope

1.1 This test method covers the determination of strength and stress-strain relationships for a cylindrical specimen of either an undisturbed or remolded saturated cohesive soil when it is isotropically consolidated and sheared undrained in compression at a constant rate of axial deformation (strain controlled).

1.2 The test method provides for the calculation of total and effective stresses on, and axial compression of the test specimen by measurement of axial load, axial deformation, and pore-water pressure.

1.3 The test provides data useful in determining strength and deformation properties of cohesive soils such as Mohr strength envelopes and Young's modulus. Generally, three specimens are tested at different effective consolidation stresses to define a strength envelope.

1.4 The determination of strength envelopes and the development of relationships to aid in interpreting and evaluating test results are left to the engineer or office requesting the test.

1.5 The values stated in either SI or non-SI units shall be regarded separately as standard. The values in each system may not be exact equivalents, therefore, each system must be used independently of the other, without combining values in any way.

1.6 *This standard may involve hazardous materials, operations, and equipment. This standard does not purport to address all of the safety problems associated with its use. It is the responsibility of the user of this standard to establish appropriate safety and health practices and determine the applicability of regulatory limitations prior to use.*

2. Referenced Documents

2.1 *ASTM Standards:*

D 422 Method for Particle-Size Analysis of Soils[2]

D 653 Terminology Relating to Soil, Rock, and Contained Fluids[2]

D 854 Test Method for Specific Gravity of Soils[2]

D 1587 Practice for Thin-Walled Tube Sampling of Soils[2]

D 2166 Test Method for Unconfined Compressive Strength of Cohesive Soil[2]

D 2216 Method for Laboratory Determination of Water Content of Soil, Rock, and Soil-Aggregate Mixtures[2]

D 2435 Test Method for One-Dimensional Consolidation Properties of Soils[2]

D 2487 Test Method for Classification of Soils for Engineering Purposes[2]

D 2850 Test Method for Unconsolidated, Undrained Compressive Strength of Cohesive Soils in Triaxial Compression[2]

D 4220 Practices for Preserving and Transporting Soil Samples[2]

D 4318 Test Method for Liquid Limit, Plastic Limit, and Plasticity Index of Soils[2]

3. Terminology

3.1 *Definitions*—The definitions of terms used in this test method shall be in accordance with Terminology D 653.

3.2 *Description of Terms Specific to this Standard:*

3.2.1 *back pressure*—a pressure applied to the specimen pore-water to cause air in the pore space to pass into solution in the pore-water, that is, to saturate the specimen.

3.2.2 *effective consolidation stress*—the difference between the cell pressure and the pore-water pressure prior to shearing the specimen.

3.2.3 *failure*—the stress condition at failure for a test specimen. Failure is often taken to correspond to the maximum principal stress difference (maximum deviator stress) attained or the principal stress difference (deviator stress) at 15 % axial strain, whichever is obtained first during the performance of a test. Depending on soil behavior and field application, other suitable failure criteria may be defined, such as maximum effective stress obliquity, σ'_1/σ'_3, or the principal stress difference (deviator stress) at a selected axial strain other than 15 %.

4. Significance and Use

4.1 The shear strength of a saturated soil in triaxial compression depends on the stresses applied, time of consolidation, strain rate, and the stress history experienced by the soil.

4.2 The strength in this test is measured under undrained conditions and is applicable to field conditions where soils that have been fully consolidated under one set of stresses are subjected to a change in stress without time for further consolidation to take place (undrained condition), and the field stress conditions are similar to those in the test.

[1] This test method is under the jurisdiction of ASTM Committee D-18 on Soil and Rock and is the direct responsibility of Subcommittee D18.05 on Structural Properties of Soils.

Current edition approved May 3, 1988. Published July 1988.

[2] *Annual Book of ASTM Standards*, Vol 04.08.

NOTE 1—If the strength is required for the case where the soil is not consolidated during testing prior to shear, refer to Test Method D 2850 or Test Method D 2166.

4.3 Using the pore-water pressure measured during the test, the shear strength determined from this test can be expressed in terms of effective stress. This shear strength may be applied to field conditions where full drainage can occur (drained conditions) or where pore pressures induced by loading can be estimated, and the field stress conditions are similar to those in the test.

4.4 The shear strength determined from the test expressed in terms of total stresses (undrained conditions) or effective stresses (drained conditions) is commonly used in embankment stability analyses, earth pressure calculations, and foundation design.

5. Apparatus

5.1 A schematic diagram of a triaxial compression apparatus suitable for the performance of consolidated-undrained tests is shown in Fig. 1. The requirements for equipment needed to perform satisfactory tests are given in the following sections.

5.2 *Axial Loading Device*—The axial compression device may be a screw jack driven by an electric motor through a geared transmission, a hydraulic or pneumatic loading device, or any other compression device with sufficient capacity and control to provide the rate of axial strain (loading) described in 8.4.2. The rate of advance of the loading device should not deviate by more than ±1 % from the selected value. Vibration due to the operation of the loading device shall be sufficiently small to not cause dimensional changes in the specimen or to produce changes in pore-water pressure when the drainage valves are closed.

NOTE 2—A loading device may be judged to produce sufficiently small vibrations if there are no visible ripples in a glass of water placed on the loading platform when the device is operating.

5.3 *Axial Load-Measuring Device*—The axial load-measuring device may be a load ring, electronic load cell, hydraulic load cell, or any other load-measuring device capable of the accuracy prescribed in this paragraph and may be a part of the axial loading device. The axial load-measuring device shall be capable of measuring the axial load to an accuracy of within ±1 % of the axial load at failure. If the load-measuring device is located inside the triaxial compression chamber, it shall be insensitive to horizontal forces and to the magnitude of the chamber pressure.

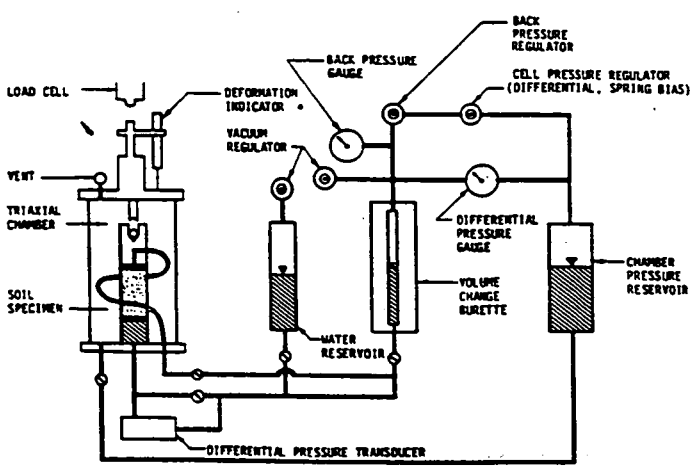

FIG. 1 Schematic Diagram of a Typical Consolidated Undrained Triaxial Apparatus

5.4 *Triaxial Compression Chamber*—The triaxial chamber must be able to withstand a chamber pressure equal to the sum of the effective consolidation stress and the back pressure. It shall consist of a top plate and a baseplate separated by a cylinder. The cylinder may be constructed of any material capable of withstanding the applied pressures. It is desirable to use a transparent material or have a cylinder provided with viewing ports so the behavior of the specimen may be observed. The top plate shall have a vent valve such that air can be forced out of the chamber as it is filled. The baseplate shall have an inlet through which the pressure liquid is supplied to the chamber, and inlets leading to the specimen base and provide for connection to the cap to allow saturation and drainage of the specimen when required.

5.5 *Axial Load Piston*—The piston passing through the top of the chamber and its seal must be designed so the variation in axial load due to friction does not exceed 0.1 % of the axial load at failure and so there is negligible lateral bending of the piston during loading.

NOTE 3—The use of two linear ball bushings to guide the piston is recommended to minimize friction and maintain alignment.

NOTE 4—A minimum piston diameter of ⅙ the specimen diameter has been used successfully in many laboratories to minimize lateral bending.

5.6 *Pressure- and Vacuum-Control Devices*—The chamber pressure and back pressure control devices shall be capable of applying and controlling pressures to within ±0.25 psi (2 kPa) for effective consolidation pressures less than 28 psi (200 kPa) and to within ±1 % for effective consolidation pressures greater than 28 psi (200 kPa). The vacuum control device shall be capable of applying and controlling partial vacuums to within ±0.25 psi (2 kPa). The devices may consist of self-compensating mercury pots, pneumatic pressure regulators, combination pneumatic pressure and vacuum regulators, or any other device capable of applying and controlling pressures or partial vacuums to the required tolerances.

5.7 *Pressure- and Vacuum-Measurement Devices*—The chamber pressure, back pressure, and vacuum measuring devices shall be capable of measuring pressures or partial vacuums to the tolerances given in 5.6. They may consist of Bourdon gages, pressure manometers, electronic pressure transducers, or any other device capable of measuring pressures, or partial vacuums to the stated tolerances. If separate devices are used to measure the chamber pressure and back pressure, the devices must be calibrated simultaneously and against the same pressure source. Since the chamber and back pressure are the pressures taken at the midheight of the specimen, it may be necessary to adjust the calibration of the devices to reflect the hydraulic head of fluids in the chamber and back pressure control systems (Fig. 1).

5.8 *Pore-Water Pressure Measurement Device*—The specimen pore-water pressure shall also be measured to the tolerances given in 5.6. During undrained shear, the pore-

250

water pressure shall be measured in such a manner that as little water as possible is allowed to go into or out of the specimen. To achieve this requirement, a very stiff electronic pressure transducer or null-indicating device must be used. With an electronic pressure transducer the pore-water pressure is read directly. With a null-indicating device a pressure control is continuously adjusted to maintain a constant level of the water/mercury interface in the capillary bore of the device. The pressure required to prevent movement of the water is equal to the pore-water pressure. Both measuring devices shall have a rigidity of all the assembled parts of the pore-water pressure measurement system relative to the total volume of the specimen, satisfying the following requirement:

$$\frac{(\Delta V/V)}{\Delta u} < 2.2 \times 10^{-5}\ \text{in.}^2/\text{lb}\ (3.2 \times 10^{-6}\ \text{m}^2/\text{kN}) \qquad (1)$$

where:

ΔV = change in volume of the pore-water measurement system due to a pore pressure change, in.^{3} (mm^3),
V = the total volume of the specimen, in.^{3} (mm^3), and
Δu = the change in pore pressure, psi (kPa).

NOTE 5—To meet the rigidity requirement, tubing between the specimen and the measuring device should be short and thick walled with small bores. Thermoplastic, copper, and stainless steel tubing have been used successfully in many laboratories.

5.9 *Volume Change Measurement Device*—The volume of water entering or leaving the specimen shall be measured with an accuracy of within ±0.05 % of the total volume of the specimen. The volume measuring device is usually a burette but may be any other device meeting the accuracy requirement. The device must be able to withstand the maximum chamber pressure.

5.10 *Deformation Indicator*—The vertical deformation of the specimen is usually determined from the travel of the piston acting on the top of the specimen. The piston travel shall be measured with an accuracy of at least ±0.02 % of the initial specimen height. The deformation indicator shall have a travel range of at least 20 % of the initial height of the specimen and may be a dial indicator, linear variable differential transformer (LVDT), extensiometer, or other measuring device meeting the requirements for accuracy and range.

5.11 *Specimen Cap and Base*—The specimen cap and base shall be designed to provide drainage from both ends of the specimen. They shall be constructed of a rigid, noncorrosive, impermeable material, and each shall, except for the drainage provision, have a circular plane surface of contact with the porous discs and a circular cross section. The weight of the specimen cap and top porous disc shall be less than 0.5 % of the applied axial load at failure or less than 0.1 lb (50 g). The diameter of the cap and base shall be equal to the initial diameter of the specimen. The specimen base shall be connected to the triaxial compression chamber to prevent lateral motion or tilting, and the specimen cap shall be designed such that eccentricity of the piston-to-cap contact relative to the vertical axis of the specimen does not exceed 0.05 in. (1.3 mm). The end of the piston and specimen cap contact area shall be designed so that tilting of the specimen cap during the test is minimal. The cylindrical surface of the specimen base and cap that contacts the membrane to form a seal shall be smooth and free of scratches.

5.12 *Porous Discs*—The specimen shall be separated from the specimen cap and base by rigid porous discs of a diameter equal to that of the specimen. The coefficient of permeability of the discs shall be approximately equal to that of fine sand (4×10^{-5} in./s (1×10^{-4} cm/s)). The discs shall be regularly checked to determine whether they have become clogged.

NOTE 6—Filter-paper discs of a diameter equal to that of the specimen may be placed between the porous discs and specimen to avoid clogging of the porous discs when accurate moduli values are not required.

5.13 *Filter-Paper Strips and Discs*—Filter-paper strips are used by many laboratories to decrease the time required for testing. If filter strips and discs are used, they shall be of a type that does not dissolve in water. The coefficient of permeability of the filter paper shall not be less than 4×10^{-6} in./s (1×10^{-5} cm/s) for a normal pressure of 80 psi (550 kPa). To avoid hoop tension, filter strips should cover no more than 50 % of the specimen periphery. Filter-strip cages similar to that shown in Fig. 2 have been successfully used by many laboratories. An equation for correcting the principal stress difference (deviator stress) for the effect of the strength of vertical filter strips is given in 10.6.

NOTE 7—Whatman's No. 54 Filter Paper has been found to meet the permeability and durability requirements.

5.14 *Rubber Membrane*—The rubber membrane used to encase the specimen shall provide reliable protection against leakage. To check a membrane for leakage, the membrane shall be placed around a cylindrical form, sealed at both ends with rubber O-rings, subjected to a small air pressure on the inside, and immersed in water. If air bubbles appear from any point on the membrane it shall be rejected. To offer minimum restraint to the specimen, the unstretched membrane diameter shall be between 90 and 95 % of that of the specimen. The membrane thickness shall not exceed 1 % of the diameter of the specimen. The membrane shall be sealed

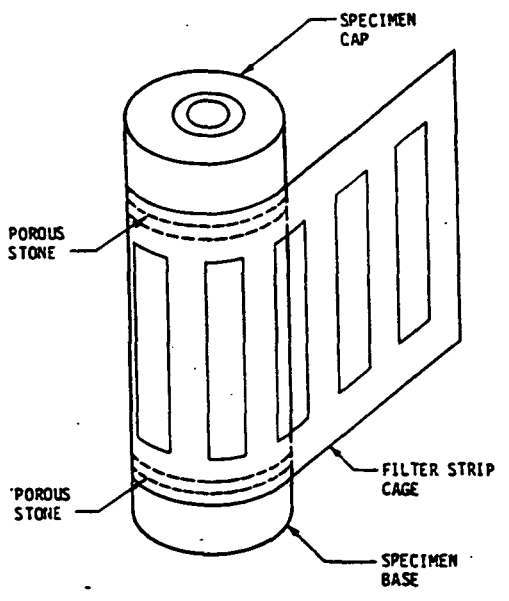

FIG. 2 Filter Strip Cage

to the specimen cap and base with rubber O-rings for which the unstressed inside diameter is between 75 and 85 % of the diameter of the cap and base, or by other means that will provide a positive seal. An equation for correcting the principal stress difference (deviator stress) for the effect of the stiffness of the membrane is given in 10.7.

5.15 *Valves*—Changes in volume due to opening and closing valves may result in inaccurate volume change and pore-water pressure measurements. For this reason, valves in the specimen drainage system shall be of the type that produce minimum volume changes due to their operation. A valve may be assumed to produce minimum volume change if opening or closing the valve in a closed, saturated pore-water pressure system does not induce a pressure change of greater than ±0.1 psi (0.7 kPa). All valves must be capable of withstanding applied pressures without leakage.

NOTE 8—Ball valves have been found to provide minimum volume-change characteristics; however, any other type of valve having suitable volume-change characteristics may be used.

5.16 *Specimen-Size Measurement Devices*—Devices used to determine the height and diameter of the specimen shall measure the respective dimensions to within ±0.1 % of the total dimension and shall be constructed such that their use will not disturb the specimen.

NOTE 9—Circumferential measuring tapes are recommended over calipers for measuring the diameter.

5.17 *Recorders*—Specimen behavior may be recorded manually or by electronic digital or analog recorders. If electronic recorders are used, it shall be necessary to calibrate the measuring devices through the recorder using known input standards.

5.18 *Sample Extruder*—The sample extruder shall be capable of extruding the soil core from the sampling tube at a uniform rate in the same direction of travel as the sample entered the tube and with minimum disturbance of the sample. If the soil core is not extruded vertically, care should be taken to avoid bending stresses on the core due to gravity. Conditions at the time of sample removal may dictate the direction of removal, but the principal concern is to minimize the degree of disturbance.

5.19 *Timer*—A timing device indicating the elapsed testing time to the nearest 1 s shall be used to obtain consolidation data (8.3.3).

5.20 *Weighing Device*—The specimen weighing device shall determine the mass of the specimen to an accuracy of within ±0.05 % of the total mass of the specimen.

5.21 *Water Deaeration Device*—The amount of dissolved gas (air) in the water used to saturate the specimen may be decreased by boiling, by heating and spraying into a vacuum, or by any other method that will satisfy the requirement for saturating the specimen within the limits imposed by the available maximum back pressure and time to perform the test.

5.22 *Testing Environment*—The consolidation and shear portion of the test shall be performed in an environment where temperature fluctuations are less than ±7.2°F (±4°C) and there is no direct contact with sunlight.

5.23 *Miscellaneous Apparatus*—Specimen trimming and carving tools including a wire saw, steel straightedge, miter box, and vertical trimming lathe, apparatus for preparing compacted specimens, membrane and O-ring expander, water content cans, and data sheets shall be provided as required.

6. Test Specimen Preparation

6.1 *Specimen Size*—Specimens shall be cylindrical and have a minimum diameter of 1.3 in. (3.3 cm). The height-to-diameter ratio shall be between 2 and 2.5. The largest particle size shall be smaller than 1/6 the specimen diameter. If, after completion of a test, it is found based on visual observation that oversize particles are present, indicate this information in the report of test data (11.1.22).

NOTE 10—If oversize particles are found in the specimen after testing, a particle-size analysis may be performed in accordance with Method D 422 to confirm the visual observation and the results provided with the test report (11.1.4).

6.2 *Undisturbed Specimens*—Prepare undisturbed specimens from large undisturbed samples or from samples secured in accordance with Practice D 1587 or other acceptable undisturbed tube sampling procedures and preserved and transported in accordance with the practices for Group C samples in Practices D 4220. Specimens obtained by tube sampling may be tested without trimming except for cutting the end surfaces plane and perpendicular to the longitudinal axis of the specimen, provided soil characteristics are such that no significant disturbance results from sampling. Handle specimens carefully to minimize disturbance, changes in cross section, or change in water content. If compression or any type of noticeable disturbance would be caused by the extrusion device, split the sample tube lengthwise or cut the tube in suitable sections to facilitate removal of the specimen with minimum disturbance. Prepare trimmed specimens, in an environment such as a controlled high-humidity room where soil water content change is minimized. Where removal of pebbles or crumbling resulting from trimming causes voids on the surface of the specimen, carefully fill the voids with remolded soil obtained from the trimmings. Where the sample condition permits a vertical trimming lathe that will accommodate the total sample may be used as an aid in preparing the specimen to the required diameter. After obtaining the desired diameter, place the specimen in a miter box and cut the specimen to the final length with a wire saw or other suitable device. Trim the surfaces with the steel straightedge. Perform one or more water content determinations on material trimmed from the specimen in accordance with Method D 2216. Determine the mass and dimensions of the specimen using the devices described in 5.16 and 5.20. A minimum of three height measurements (120° apart) and at least three diameter measurements at the quarter points of the height shall be made to determine the average height and diameter of the specimen.

6.3 *Compacted Specimens*—Compacted specimens may be prepared by compacting material in at least six layers using a pressing or kneading action into a split mold of circular cross section having dimensions meeting the requirements enumerated in 6.1. Material required for the specimen shall be batched by thoroughly mixing soil with sufficient water to produce the desired water content. After batching store the material in a covered container for at least 16 h prior to compaction. Specimens may be compacted to the

252

desired density by either: (*1*) kneading or tamping each layer until the accumulative mass of the soil placed in the mold is compacted to a known volume; or (*2*) by adjusting the number of layers, the number of tamps per layer, and the force per tamp. The top of each layer shall be scarified prior to the addition of material for the next layer. The tamper used to compact the material shall have diameter equal to or less than ½ the diameter of the mold. After a specimen is formed, with the ends perpendicular to the longitudinal axis, remove the mold and determine the mass and dimensions of the specimen using the devices described in 5.16 and 5.20. Perform one or more water content determinations on excess material used to prepare the specimen in accordance with Method D 2216.

NOTE 11—It is common for the unit weight of the specimen after removal from the mold to be less than the value based on the volume of the mold. This occurs as a result of the specimen swelling after removal of the lateral confinement due to the mold.

7. Mounting Specimen

7.1 *Preparations*—Before mounting the specimen in the triaxial chamber, make the following preparations:

7.1.1 If deemed necessary, check the rubber membrane for leaks (see 5.14).

7.1.2 Place the membrane on the membrane expander or, if it is to be rolled onto the specimen, roll the membrane on the cap or base.

7.1.3 Check that the porous discs and specimen drainage tubes are not obstructed by passing air or water through the appropriate lines.

7.1.4 Attach the pressure-control and volume-measurement system, and a pore-pressure measurement device to the chamber base.

7.2 Depending on whether the saturation portion of the test will be initiated with either a wet or dry drainage system, mount the specimen using the appropriate method, as follows in either 7.2.1 or 7.2.2:

NOTE 12—It is recommended that the dry mounting method be used for specimens of soils that swell appreciably when in contact with water. If the wet mounting method is used for such soils, it will be necessary to obtain the specimen dimensions after the specimen has been mounted. In such cases, it will be necessary to determine the double thickness of the membrane, the double thickness of the wet filter paper strips (if used), and the combined height of the cap, base, and porous discs (including the thickness of filter discs if they are used) so that the appropriate values may be subtracted from the measurements.

7.2.1 *Wet Mounting Method:*

7.2.1.1 Fill the specimen drainage lines and the pore-water pressure measurement device with deaired water.

7.2.1.2 Saturate the porous discs by boiling them in water for at least 10 min and allow to cool to room temperature.

7.2.1.3 Place a saturated porous disc on the specimen base and after wiping away all free water on the disc, place the specimen on the disc. Next, place another porous disc and the specimen cap on top of the specimen. Check that the specimen cap, specimen, and porous discs are centered on the specimen base.

NOTE 13—If filter-paper discs are to be placed between the porous discs and specimen, they should be dipped in water prior to placement.

7.2.1.4 If filter-paper strips or a filter-paper cage (Fig. 2) are to be used, saturate the paper with water prior to placing it on the specimen. To avoid hoop tension, do not cover more than 50 % of the specimen periphery with vertical strips of filter paper.

7.2.1.5 Proceed with Section 7.3.

7.2.2 *Dry Mounting Method:*

7.2.2.1 Dry the specimen drainage system. This may be accomplished by allowing dry air to flow through the system prior to mounting the specimen.

7.2.2.2 Dry the porous discs in the oven overnight prior to mounting the specimen and place in a desiccator while allowing the discs to cool to room temperature.

7.2.2.3 Place a dry porous disc on the specimen base and place the specimen on the disc. Next, place a dry porous disc and the specimen cap on the specimen. Check that the specimen cap, porous discs, and specimen are centered on the specimen base.

NOTE 14—If desired, dry filter-paper discs may be placed between the porous discs and specimen.

7.2.2.4 If filter-paper strips or a filter-paper cage (Fig. 2) are to be used, the cage or strips may be held in place by small pieces of tape at the top and bottom.

7.3 Place the rubber membrane around the specimen and seal it at the cap and base with two rubber O-rings or other positive seal at each end. A thin coating of silicon grease on the vertical surfaces of the cap and base will aid in sealing the membrane. If filter-paper strips or a filter-paper cage are used, do not apply grease to surfaces in contact with the filter-paper.

7.4 Attach the top drainage line and check the alignment of the specimen and the specimen cap. If the dry mounting method has been used, apply a partial vacuum of approximately 5 psi (35 kPa) (not to exceed the consolidation stress) to the specimen through the top drainage line prior to checking the alignment. If there is any eccentricity, release the partial vacuum, realign the specimen and cap, and then reapply the partial vacuum. If the wet mounting method has been used, the alignment of the specimen and the specimen cap may be checked and adjusted without the use of a partial vacuum.

8. Procedure

8.1 *Prior to Saturation*—After assembling the triaxial chamber, perform the following operations:

8.1.1 Bring the axial load piston into contact with the specimen cap several times to permit proper seating and alignment of the piston with the cap. During this procedure, take care not to apply an axial load to the specimen exceeding 0.5 % of the estimated axial load at failure. When the piston is brought into contact, record the reading of the deformation indicator.

8.1.2 Fill the chamber with the chamber liquid, being careful to avoid trapping air or leaving an air space in the chamber.

8.2 *Saturation*—The objective of the saturation phase of the test is to fill all voids in the specimen with water without undesirable prestressing of the specimen or allowing the specimen to swell. Saturation is usually accomplished by applying back pressure to the specimen pore water to drive air into solution after either: (*1*) applying vacuum to the specimen and dry drainage system (lines, porous discs, pore-pressure device, filter-strips or cage, and discs) and

allowing deaired water to saturate the system while maintaining the vacuum; or (2) saturating the drainage system by boiling the porous discs in water and allowing water to flow through the system prior to mounting the specimen. It should be noted that time is required to place air into solution. Accordingly, removing as much air as possible prior to applying back pressure will decrease the amount of air that will have to be placed into solution and will also decrease the back pressure required for saturation. In addition, air remaining in the specimen and drainage system just prior to applying back pressure will go into solution much more readily if deaired water is used for saturation. The use of deaired water will also decrease the time and back pressure required for saturation. Many procedures have been developed to accomplish saturation. The following are suggested procedures:

8.2.1 *Starting with Initially Dry Drainage System*—Increase the partial vacuum acting on top of the specimen to the maximum available vacuum. If the effective consolidation stress under which the strength is to be determined is less than the maximum partial vacuum, apply a lower partial vacuum to the chamber. The difference between the partial vacuum applied to the specimen and the chamber should never exceed the effective consolidation stress for the test and should not be less than 5 psi (35 kPa) to allow for flow through the sample. After approximately 2 h, allow deaired water to percolate from the bottom to the top of the specimen under a differential vacuum of less than 3 psi (20 kPa) (Note 15).

8.2.1.1 There should always be a positive effective stress of at least 2 psi (13 kPa) at the bottom of the specimen during this part of the procedure. When water appears in the burette connected to the top of the specimen, close the valve to the bottom of the specimen and fill the burette with deaired water. Next, reduce the vacuum acting on top of the specimen through the burette to atmospheric pressure while simultaneously increasing the chamber pressure by an equal amount. During this process, the difference between the pore pressure measured at the bottom of the specimen and the chamber pressure should not be allowed to exceed the desired effective consolidation pressure. When the pore pressure at the bottom of the specimen stabilizes, proceed with back pressuring of the specimen pore-water as described in 8.2.3. To check for equalization, close the drainage valves to the specimen and measure the pore pressure change over a 1-min interval. If the change is less than 1 % of the chamber pressure, the pore pressure may be assumed to be stabilized.

NOTE 15—For saturated clays, percolation may not be necessary and water can be added simultaneously at both top and bottom.

8.2.2 *Starting with Initially Saturated Drainage System*—After filling the burette connected to the top of the specimen with deaired water, apply a chamber pressure of 5 psi (35 kPa) or less and open the specimen drainage valves. When the pore pressure at the bottom of the specimen stabilizes, according to the method described in 8.2.1, or when the burette reading stabilizes, back pressuring of the specimen pore-water may be initiated.

8.2.3 *Applying Back Pressure*—Simultaneously increase the chamber and back pressure in steps with specimen drainage valves opened so that deaired water from the burette connected to the top and bottom of the specimen may flow into the specimen. To avoid undesirable prestressing of the specimen while applying back pressure, the pressures must be applied incrementally with adequate time between increments to permit equalization of pore-water pressure throughout the specimen. The size of each increment might be 5 psi (35 kPa), 10 psi (70 kPa), or even 20 psi (140 kPa), depending on the compressibility of the soil specimen, the magnitude of the desired effective consolidation stress, and the degree of saturation of the specimen just prior to the addition of the increment. The difference between the chamber pressure and the back pressure during back pressuring should not exceed 5 psi (35 kPa) unless it is deemed necessary to control swelling of the specimen during the procedure. The difference between the chamber and back pressure must also remain within ±5 % when the pressures are raised and within ±2 % when the pressures are constant. To check for equalization after application of a back pressure increment or after the full value of back pressure has been applied, close the specimen drainage valves and measure the change in pore-pressure over a 1-min interval. If the change in pore pressure is less than 1 % of the difference between the chamber pressure and the back pressure, another back pressure increment may be added or a measurement may be taken of the pore pressure parameter B (see 8.2.4) to determine if saturation is completed. Specimens shall be considered to be saturated if the value of B is equal to or greater than 0.95, or if B remains unchanged with addition of back pressure increments.

NOTE 16—Although the pore pressure parameter B is used to measure the degree of saturation, the B-value is also a function of soil stiffness. If the degree of saturation of the sample is 100 %, the B-value measurement will increase with decreasing soil stiffness. Therefore, when testing soft soil samples, a B-value of 95 % may indicate a degree of saturation less than 100 %.

NOTE 17—The back pressure required to saturate a compacted specimen may be higher for the wet mounting method than for the dry mounting method and may be as high as 200 psi (1400 kPa).

NOTE 18—Many laboratories use differential pressure regulators and transducers to achieve the requirements for small differences between chamber and back pressure.

8.2.4 *Measurement of the Pore Pressure Parameter B*—Determine the value of the pore pressure parameter B in accordance with 8.2.4.1 through 8.2.4.4. The pore pressure parameter B is defined by the following equation:

$$B = \Delta u / \Delta \sigma_3 \quad (2)$$

where:

Δu = the change in the specimen pore pressure that occurs as a result of a change in the chamber pressure when the specimen drainage valves are closed, and

$\Delta \sigma_3$ = the change in the chamber pressure.

8.2.4.1 Close the specimen drainage valves and increase the chamber pressure 10 psi (70 kPa).

8.2.4.2 After approximately 2 min, determine and record the maximum value of the induced pore pressure. For many specimens, the pore pressure may decrease after the immediate response and then increase slightly with time. If this occurs, values of Δu should be plotted with time and the asymptotic pore pressure used as the change in pore pressure. A large increase in Δu with time or values of Δu greater than $\Delta \sigma_3$ indicate a leak of chamber fluid into the specimen. Decreasing values of Δu with time may indicate a leak in that

254

part of the pore pressure measurement system located outside of the chamber.

8.2.4.3 Calculate the B-value using Eq 2.

8.2.4.4 Reapply the same effective consolidation stress as existed prior to the B-value by reducing the chamber pressure by 10 psi (70 kPa) or by alternatively, increasing the back pressure by 10 psi (70 kPa). If B is continuing to increase with increasing back pressure, continue with back pressure saturation. If B is equal to or greater than 0.95 or if a plot of B versus back pressure indicates no further increase in B with increasing back pressure, initiate consolidation.

8.3 *Consolidation*—The objective of the consolidation phase of the test is to allow the specimen to reach equilibrium in a drained state under the effective consolidation stress for which a strength determination is required. During consolidation, data is obtained for use in determining when consolidation is complete and for computing a rate of strain to be used for the shear portion of the test. The consolidation procedure is as follows:

8.3.1 When the saturation phase of the test is completed, bring the axial load piston into contact with the specimen cap and record the reading on the deformation indicator. During this procedure, take care not to apply an axial load to the specimen exceeding 0.5 % of the estimated axial load at failure. After recording the reading, raise the piston a small distance above the specimen cap and lock the piston in place.

8.3.2 With the specimen drainage valves closed, hold the maximum back pressure constant and increase the chamber pressure until the difference between the chamber pressure and the back pressure equals the desired effective consolidation pressure.

NOTE 19—In certain circumstances, consolidation in stages may be desirable, especially when radial drainage is used.

8.3.3 Obtain an initial burette reading and then open appropriate drainage valves so that the specimen may drain from both ends into the burette. At increasing intervals of elapsed time (0.1, 0.2, 0.5, 1, 2, 4, 8, 15, and 30 min and at 1, 2, 4, and 8 h, etc.) observe and record the burette readings and after the 15-min reading record the accompanying deformation indicator readings obtained by carefully coupling the piston with the specimen cap. If burette and deformation indicator readings are to be plotted against the square root of time, the time intervals at which readings are taken may be adjusted to those that have easily obtained square roots, for example, 0.09, 0.25, 0.49, 1, 4, 9 min, etc. Depending on soil type, time intervals may be changed to convenient time intervals which allow for adequate definition of volume change versus time.

NOTE 20—In cases where significant amounts of fines may be washed from the specimen because of high initial hydraulic gradients, it is permissible to gradually increase the chamber pressure to the total desired pressure over a period of up to 10 min with the drainage valves open. If this is done, recording of data should begin immediately after the total pressure is reached.

8.3.4 Plot the burette and deformation indicator readings versus either the logarithm or square root of elapsed time. Allow consolidation to continue for at least one log cycle of time or one overnight period after 100 % primary consolidation has been achieved as determined in accordance with one of the procedures outlined in Test Method D 2435. A marked deviation between the slopes of the burette and deformation indicator curves toward the end of consolidation based on deformation indicator readings indicates leakage of fluid from the chamber into the specimen and the test should be terminated.

8.3.5 Determine the time for 50 % primary consolidation, t_{50}, in accordance with one of the procedures outlined in Test Method D 2435.

8.4 *Shear*—During shear, the chamber pressure shall be kept constant while advancing the axial load piston downward against the specimen cap using controlled axial strain as the loading criterion. Specimen drainage is not permitted during shear.

8.4.1 *Prior to Axial Loading*—Before initiating shear, perform the following steps:

8.4.1.1 By opening or closing the appropriate valves, isolate the specimen so that during shear the specimen pore-water pressure will be measured by the pore-pressure measurement device and no drainage will occur.

8.4.1.2 Place the chamber in position in the axial loading device. Be careful to align the axial loading device, the axial load-measuring device, and the triaxial chamber to prevent the application of a lateral force to the piston during shear.

8.4.1.3 Bring the axial load piston into contact with the specimen cap to permit proper seating and realignment of the piston with the cap. Remember that during this procedure, care should be taken not to apply an axial load to the specimen exceeding 0.5 % of the estimated axial load at failure. If the axial load-measuring device is located outside of the triaxial chamber, the chamber pressure will produce an upward force on the piston that will react against the axial loading device. In this case, start shear with the piston slightly above the specimen cap, and before the piston comes into contact with the specimen cap, either (*1*) measure and record the initial piston friction and upward thrust of the piston produced by the chamber pressure and later correct the measured axial load, or (*2*) adjust the axial load-measuring device to compensate for the friction and thrust. The variation in the axial load-measuring device reading should not exceed 0.1 % of the estimated failure load when the piston is moving downward prior to contacting the specimen cap. If the axial load-measuring device is located inside the chamber, it will not be necessary to correct or compensate for the uplift force acting on the axial loading device or for piston friction. However, if an internal load-measuring device of significant flexibility is used in combination with an external deformation indicator, correction of the deformation readings may be necessary. In both cases, record the initial reading on the pore-water pressure measurement device immediately prior to when the piston contacts the specimen cap and the reading on the deformation indicator when the piston contacts the specimen cap.

8.4.2 *Axial Loading*—Apply axial load to the specimen using a rate of axial strain that will produce approximate equalization of pore pressures throughout the specimen at failure. Assuming failure will occur after 4 %, a suitable rate of strain may be obtained by dividing 4 % by ten times the value of t_{50} (obtained in 8.3.5). This rate of strain will provide for determination of accurate effective stress paths in the range necessary to define effective strength envelopes. If, however, it is estimated that failure will occur at a strain value lower than 4 %, it will be necessary to obtain a suitable

strain rate by dividing the estimated failure strain by ten times the value of t_{50}. At a minimum, record load, deformation, and pore-water pressure values at increments of 0.1 % to 1 % strain and, thereafter, at every 1 %. Take sufficient readings to define the stress-strain curve; hence, more frequent readings may be required in the early stages of the test and as failure is approached. Continue the loading to 15 % strain, except loading may be stopped when the principal stress difference (deviator stress) has dropped 20 % or when 5 % additional axial strain occurs after a peak in principal stress difference (deviator stress).

NOTE 21—The use of a manually adjusted null-indicating device will require nearly continuous attention to ensure the criterion for undrained shear.

9. Removing Specimen

9.1 When shear is completed, perform the following steps:

9.1.1 Remove the axial load and reduce the chamber and back pressures to zero.

9.1.2 With the specimen drainage valves remaining closed, quickly remove the specimen from the apparatus so that the specimen will not have time to absorb water from the porous discs.

9.1.3 Remove the rubber membrane (and the filter-paper strips or cage from the specimen if they were used) and determine the water content of the total specimen in accordance with the procedure outlined in Method D 2216. (Free water remaining on the specimen after removal of the membrane should be blotted away before obtaining the water content.) In cases where there is insufficient material rom trimmings for index property tests, that is, where specimens have the same diameter as the sampling tube, the specimen should be weighed prior to removing material for index property tests and a representative portion of the specimen used to determine its final water content. Prior to placing the specimen (or portion thereof) in the oven to dry, sketch a picture or take a photograph of the specimen showing the mode of failure (shear plane, bulging, etc.).

10. Calculations

10.1 *Initial Specimen Properties*—Using the dry mass of the total specimen, calculate and record on the appropriate data sheet the initial water content, volume of solids, initial void ratio, initial degree of saturation, and initial dry unit weight. Calculate the specimen volume from values measured in 6.2 or 6.3. Calculate the volume of solids by dividing the dry mass of the specimen by the specific gravity of the solids (Note 22) and dividing by the density of water. Calculate the void ratio by dividing the volume of voids by the volume of solids where the volume of voids is assumed to be the difference between the specimen volume and the volume of the solids. Calculate dry density by dividing the dry mass of the specimen by the specimen volume.

NOTE 22—The specific gravity of solids can be determined in accordance with Test Method D 854 or it may be assumed based on previous test results.

10.2 *Specimen Properties After Consolidation*—Calculate ıe specimen height and area after consolidation as follows:

10.2.1 Height of specimen after consolidation, H_c, is determined from the following equation:

$$H_c = H_o - \Delta H_o \tag{3}$$

where:

H_o = initial height of specimen, in. (mm), and

ΔH_o = change in height of specimen at end of consolidation, in. (mm).

10.2.2 The cross-sectional area of the specimen after consolidation, A_c, shall be computed using one of the following methods (assuming consistent units are used). The choice of the method to be used depends on whether shear data are to be computed as the test is performed (in which case Method A would be used) or on which of the two methods in the opinion of a qualified person yield specimen conditions considered to be most representative of those after consolidation.

10.2.2.1 *Method A:*

$$A_c = (V_o - \Delta V_{sat} - \Delta V_c)/H_c \tag{4}$$

where:

V_o = initial volume of specimen, in.^{3} (mm^3),

ΔV_c = change in volume of specimen during consolidation as indicated by burette readings, in.^{3} (mm^3), and

ΔV_{sat} = change in volume of specimen during saturation, in.^{3} (mm^3), as follows:

$$\Delta V_{sat} = 3V_o\,\Delta H_s/H_o$$

where:

ΔH_s = change in height of the specimen during saturation, in. (mm).

10.2.2.2 *Method B:*

$$A_c = (V_{wf} + V_s)/H_c \tag{5}$$

where:

V_{wf} = final volume of water (based on final water content), in.^{3} (mm^3), and

V_s = volume of solids, in.^{3} (mm^3), as follows:

$$V_s = w_s/(G_s\rho_w)$$

where:

w_s = specimen dry mass, lb (kg),

G_s = specific gravity of solids, and

ρ_w = density of water, lb/in.^{3} (kg/mm^3).

10.2.3 Using the calculated dimensions of the specimen after consolidation, and assuming that the water content after consolidation is the same as the final water content, calculate the consolidated void ratio and degree of saturation.

NOTE 23—If the specimen absorbs water from the porous discs during the time it is being removed from the apparatus, the calculated degree of saturation based on the final water content will exceed 100 %.

NOTE 24—In this test method, the equations are written such that compression and consolidation are considered positive.

10.3 *Shear Data:*

10.3.1 Calculate the axial strain, ϵ_1, for a given applied axial load as follows:

$$\epsilon_1 = \Delta H/H_c \tag{6}$$

where:

ΔH = change in height of specimen during loading as read from deformation indicator, in. (mm), and

H_c = height of specimen after consolidation, in. (mm).

10.3.2 Calculate the cross-sectional area, A, for a given applied axial load as follows:

256

$$A = A_c/(1 - \epsilon_1) \quad (7)$$

where:

A = average cross-sectional area of the specimen after consolidation, in.^{2} (mm^2), and

ϵ_1 = axial strain for the given axial load.

NOTE 25—The cross-sectional area computed in this manner is based on the assumption that the specimen deforms as a right circular cylinder during shear. In cases where there is localized bulging, it may be possible to determine more accurate values for the area based on specimen dimension measurements obtained after shear.

10.3.3 Calculate the principal stress difference (deviator stress), $\sigma_1 - \sigma_3$, for a given applied axial load as follows:

$$\sigma_1 - \sigma_3 = P/A \quad (8)$$

where:

P = given applied axial load (corrected for uplift and piston friction if required as obtained in 8.4.1.3), lb (kN), and

A = corresponding cross-sectional area, in.^{2} (mm^2).

10.3.4 Calculate the effective minor principal stress, σ'_3 for a given applied axial load as follows:

$$\sigma'_3 = \sigma_3 - \Delta u \quad (9)$$

where:

σ_3 = effective consolidation stress, psi (kPa), and

Δu = induced pore-water pressure at the given axial load (total pore-water pressure minus the total back pressure), psi (kPa).

10.4 *Principal Stress Difference (Deviator Stress) and Induced Pore-Water Pressure versus Strain Curves*—Prepare graphs showing relationships between principal stress difference (deviator stress) and induced pore-water pressure with axial strain, plotting deviator stress and induced pore-water pressure as ordinates and axial strain as abscissa. Select the principal stress difference (deviator stress) and axial strain at failure in accordance with a definition in 3.2.3.

10.5 *$p' - q$ Diagram*—Prepare a graph showing the relationship between p', $(\sigma'_1 + \sigma'_3)/2$ and q, $(\sigma_1 - \sigma_3)/2$, plotting q as ordinate and p' as abscissa using the same scale. The value of p' for a given axial load may be computed as follows:

$$p' = ((\sigma_1 - \sigma_3) + 2\sigma'_3)/2 \quad (10)$$

where:

$\sigma_1 - \sigma_3$ = principal stress difference (deviator stress), psi (kPa), and

σ'_3 = effective minor principal stress, psi (kPa).

10.6 *Correction for Filter-Paper Strips*—For vertical filter-paper strips which extend over the total length of the specimen, apply a filter-paper strip correction to the computed values of the principal stress difference (deviator stress), if the error in principal stress difference (deviator stress) due to the strength of the filter-paper strips exceeds 5 %.

10.6.1 For values of axial strain above 2 %, use the following equation to compute the correction:

$$\Delta(\sigma_1 - \sigma_3) = K_{fp}P_{fp}/A_c \quad (11)$$

where:

$\Delta(\sigma_1 - \sigma_3)$ = correction to be subtracted from the measured principal stress difference (deviator stress), psi (kPa),

K_{fp} = load carried by filter-paper strips per unit length of perimeter covered by filter-paper, lbf/in. (kN/mm),

P_{fp} = perimeter covered by filter-paper, in. (mm), and

A_c = cross-sectional area of specimen after consolidation, in.^{2} (mm^2).

10.6.2 For values of axial strain of 2 % or less, use the following equation to compute the correction:

$$\Delta(\sigma_1 - \sigma_3) = 50\epsilon_1 K_{fp}P_{fp}/A_c \quad (12)$$

where:

ϵ_1 = axial strain (decimal form) and other terms are the same as those defined in 10.6.1.

NOTE 26—For filter-paper generally used in triaxial testing, K_{fp} is approximately 1.1 lb/in. (0.19 kN/m).

10.7 *Correction for Rubber Membrane*—Use the following equation to correct the principal stress difference (deviator stress) for the effect of the rubber membrane if the error in principal stress difference (deviator stress) due to the strength of the membrane exceeds 5 %:

$$\Delta(\sigma_1 - \sigma_3) = (4E_m t_m \epsilon_1)/D_c \quad (13)$$

where:

$\Delta(\sigma_1 - \sigma_3)$ = the correction to be subtracted from the measured principal stress difference (deviator stress), psi (kPa),

D_c = $\sqrt{4A_c/\pi}$ = diameter of specimen after consolidation, in. (mm),

E_m = Young's modulus for the membrane material, psi (kPa),

t_m = thickness of the membrane, in. (mm), and

ϵ_1 = axial strain (decimal form).

10.7.1 The Young's modulus of the membrane material may be determined by hanging a 0.5-in. (15-mm) circumferential strip of membrane using a thin rod, placing another rod through the bottom of the hanging membrane, and measuring the force per unit strain obtained by stretching the membrane. The modulus value may be computed using the following equation:

$$E_m = (F/A_m)/(\Delta L/L) \quad (14)$$

where:

E_m = Young's modulus of the membrane material, psi (kPa),

F = force applied to stretch the membrane, lbf (kN),

L = unstretched length of the membrane, in. (mm),

ΔL = change in length of the membrane due to application of the force, F, in. (mm), and

A_m = area of the membrane = 2 t_m W_s, in.^{2} (m^2 = mm^2/1 000 000)

where:

t_m = thickness of the membrane, and

W_s = width of circumferential strip (4.5 in. or 15 mm).

NOTE 27—A typical value of E_m for latex membranes is 200 psi (1400 kPa).

NOTE 28—The effect of the membrane on the lateral stress is usually assumed to be negligible.

NOTE 29—The corrections for filter-paper strips and membranes are based on simplified assumptions concerning their behavior during shear. Their actual behavior is complex and there is not a consensus on more exact corrections.

10.8 Determine the major and minor principal stresses at failure based on total stresses, σ_{1f} and σ_{3f} respectively, and on effective stresses, σ'_{1f} and σ'_{3f} respectively, as follows:

σ_{3f} = effective consolidation stress, psi (kPa),

σ_{1f} = $(\sigma_1 - \sigma_3)$ at failure + σ_{3f}, psi (kPa),

σ'_{3f} = $\sigma_{3f} - \Delta u_f$, psi (kPa), and

σ'_{1f} = $(\sigma_1 - \sigma_3)$ at failure + σ'_{3f}, psi (kPa), where Δu is the induced pore-water pressure at failure.

10.9 *Mohr Stress Circles*—Construct Mohr stress circles at failure based on total and effective stresses on an arithmetic plot with shear stress as ordinate and normal stress as abscissa using the same scales. As shown in Fig. 3, the circle based on total stresses is drawn with a radius of one-half the principal stress difference (deviator stress) at failure with its center at a value equal to one-half the sum of the major and minor total principal stresses. The Mohr stress circle based on effective stresses is drawn in a similar manner except that its center is at a value equal to one-half the sum of the major and minor effective principal stresses.

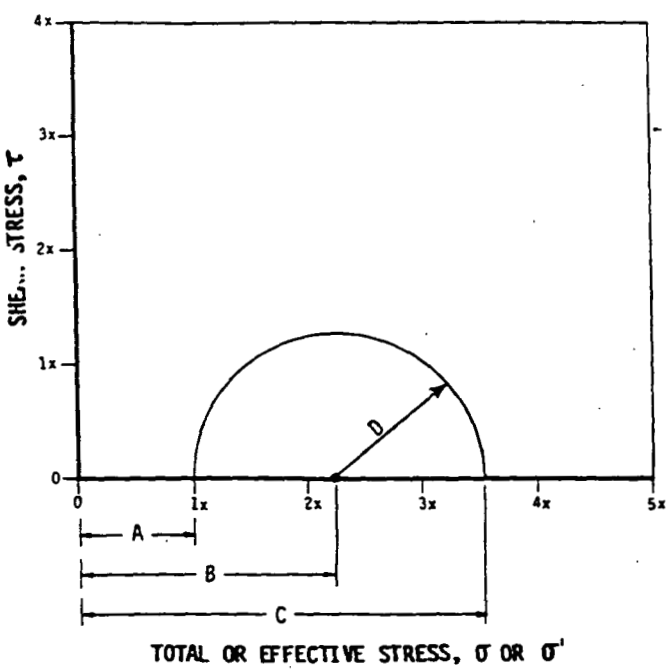

A = TOTAL OR EFFECTIVE MINOR PRINCIPAL STRESS (σ_3 or σ'_3)
B = AVERAGE OF TOTAL OR EFFECTIVE PRINCIPAL STRESSES
C = TOTAL OR EFFECTIVE MAJOR PRINCIPAL STRESS (σ_1 or σ'_1)
D = RADIUS OF THE MOHR'S CIRCLE; HALF THE PRINCIPAL STRESS DIFFERENCE

FIG. 3 Construction of Mohr Stress Circle

11. Report

11.1 The report shall include the following:

11.1.1 Identification data and visual description of specimen, including soil classification and whether the specimen is undisturbed, compacted, or otherwise prepared.

11.1.2 Values of plastic limit and liquid limit, if determined in accordance with Test Method D 4318.

11.1.3 Value of specific gravity of solids and notation if the value was determined in accordance with Test Method D 854 or assumed.

11.1.4 Particle-size analysis, if determined in accordance with Method D 422.

11.1.5 Initial specimen dry unit weight, void ratio, water content, and percent saturation.

11.1.6 Initial height and diameter of specimen.

11.1.7 Method followed for specimen saturation (that is, dry or wet method).

11.1.8 Total back pressure.

11.1.9 The pore pressure parameter B at the end of saturation.

11.1.10 Effective consolidation stress.

11.1.11 Time to 50 % primary consolidation.

11.1.12 Specimen dry unit weight, void ratio, water content, and degree of saturation after consolidation.

11.1.13 Specimen cross-sectional area after consolidation and method used for determination.

11.1.14 Failure criterion used.

11.1.15 The value of the principal stress difference (deviator stress) at failure and the values of the effective minor and major principal stresses at failure.

11.1.16 Axial strain at failure, percent

11.1.17 Rate of strain, percent/min.

11.1.18 Principal stress difference (deviator stress) and induced pore-water pressure versus axial strain curves as described in 10.4.

11.1.19 The $p' - q$ diagram for the test results.

11.1.20 Mohr stress circles based on total and effective stresses.

11.1.21 Failure sketch or photograph of the specimen.

11.1.22 Remarks and notations regarding any unusual conditions or other information necessary to properly interpret the results obtained, including any departures from the procedure outlined.

12. Precision and Bias

12.1 The variability of soil and resultant inability to determine a true reference value prevent development of a meaningful statement of bias. Data are being evaluated to determine the precision of this test method. In addition, the subcommittee is seeking pertinent data from users of this test method.

13. Keywords

13.1 Back pressure situation; cohesive soils; consolidated-undrained-triaxial compression test; consolidated undrained triaxial compressive strength; effective consolidation stress; shear strength; strength envelope.

258

The American Society for Testing and Materials takes no position respecting the validity of any patent rights asserted in connection with any item mentioned in this standard. Users of this standard are expressly advised that determination of the validity of any such patent rights, and the risk of infringement of such rights, are entirely their own responsibility.

This standard is subject to revision at any time by the responsible technical committee and must be reviewed every five years and if not revised, either reapproved or withdrawn. Your comments are invited either for revision of this standard or for additional standards and should be addressed to ASTM Headquarters. Your comments will receive careful consideration at a meeting of the responsible technical committee, which you may attend. If you feel that your comments have not received a fair hearing you should make your views known to the ASTM Committee on Standards, 1916 Race St., Philadelphia, PA 19103.

Designation: D 5084 – 90

Standard Test Method for Measurement of Hydraulic Conductivity of Saturated Porous Materials Using a Flexible Wall Permeameter[1]

This standard is issued under the fixed designation D 5084; the number immediately following the designation indicates the year of original adoption or, in the case of revision, the year of last revision. A number in parentheses indicates the year of last reapproval. A superscript epsilon (ε) indicates an editorial change since the last revision or reapproval.

1. Scope

1.1 This test method covers laboratory measurement of the hydraulic conductivity (also referred to as *coefficient of permeability*) of water-saturated porous materials with a flexible wall permeameter.

1.2 This test method may be utilized with undisturbed or compacted specimens that have a hydraulic conductivity less than or equal to 1×10^{-5} m/s (1×10^{-3} cm/s).

1.3 The hydraulic conductivity of materials with hydraulic conductivities greater than 1×10^{-5} m/s may be determined by Test Method D 2434.

1.4 The values stated in SI units are to be regarded as the standard, unless other units are specifically given. By tradition in U.S. practice, hydraulic conductivity is reported in centimetres per second, although the common SI units for hydraulic conductivity are metres per second.

1.5 *This standard does not purport to address the safety problems associated with its use. It is the responsibility of the user of this standard to establish appropriate safety and health practices and determine the applicability of regulatory limitations prior to use.*

2. Referenced Documents

2.1 *ASTM Standards:*

D 653 Terminology Relating to Soil, Rock, and Contained Fluids[2]

D 698 Test Methods for Moisture-Density Relations of Soils and Soil-Aggregate Mixtures Using 5.5-lb (2.49-kg) Rammer and 12-in. (305-mm) Drop[2]

D 1557 Test Methods for Moisture-Density Relations of Soils and Soil-Aggregate Mixtures Using 10-lb (4.54-kg) Rammer and 18-in. (457-mm) Drop[2]

D 1587 Practice of Thin-Walled Tube Sampling of Soils[2]

D 2113 Practice for Diamond Core Drilling for Site Investigation[2]

D 2216 Method for Laboratory Determination of Water (Moisture) Content in Soil, Rock, and Soil-Aggregate Mixtures[2]

D 2434 Test Method for Permeability of Granular Soils (Constant Head)[2]

D 4220 Practices for Preserving and Transporting Soil Samples[2]

D 4753 Specification for Evaluating, Selecting and Specifying Balances and Scales for Use in Soil and Rock Testing[2]

D 4767 Test Method for Consolidated-Undrained Triaxial Compression[2]

E 145 Specification for Gravity-Convection and Forced-Ventilation Ovens[3]

3. Terminology

3.1 *Definitions:*

3.1.1 *hydraulic conductivity, k*—the rate of discharge of water under laminar flow conditions through a unit cross-sectional area of a porous medium under a unit hydraulic gradient and standard temperature conditions (20°C).

DISCUSSION—The term *coefficient of permeability* is often used instead of *hydraulic conductivity*, but *hydraulic conductivity* is used exclusively in this test method. A more complete discussion of the terminology associated with Darcy's law is given in the literature.[4]

3.1.2 *pore volume of flow*—the cumulative quantity of flow into a test specimen divided by the volume of voids in the specimen.

3.1.3 For definitions of other terms used in this test method, see Terminology D 653.

4. Significance and Use

4.1 This test method applies to one-dimensional, laminar flow of water within porous materials such as soil and rock.

4.2 The hydraulic conductivity of porous materials generally decreases with an increasing amount of air in the pores of the material. This test method applies to water-saturated porous materials containing virtually no air.

4.3 This test method applies to permeation of porous materials with water. Permeation with other liquids, such as chemical wastes, can be accomplished using procedures similar to those described in this test method. However, this test method is only intended to be used when water is the permeant liquid.

4.4 It is assumed that Darcy's law is valid and that the hydraulic conductivity is essentially unaffected by hydraulic gradient. The validity of Darcy's law may be evaluated by measuring the hydraulic conductivity of the specimen at three hydraulic gradients; if all measured values are similar (within about 25 %), then Darcy's law may be taken as valid. However, when the hydraulic gradient acting on a test

[1] This test method is under the jurisdiction of ASTM Committee D-18 on Soil and Rock and is the direct responsibility of Subcommittee D18.04 on Hydrologic Properties of Soil and Rocks.

Current edition approved June 29, 1990. Published October 1990.

[2] *Annual Book of ASTM Standards*, Vol 04.08.

[3] *Annual Book of ASTM Standards*, Vol 04.02.

[4] Olson, R. E., and Daniel, D. E., "Measurement of the Hydraulic Conductivity of Fine-Grained Soils," *Symposium on Permeability and Groundwater Contaminant Transport, ASTM STP 746*, ASTM, 1981, pp. 18–64.

specimen is changed, the state of stress will also change, and, if the specimen is compressible, the volume of the specimen will change. Thus, some change in hydraulic conductivity may occur when the hydraulic gradient is altered, even in cases where Darcy's law is valid.

4.5 This test method provides a means for determining hydraulic conductivity at a controlled level of effective stress. Hydraulic conductivity varies with varying void ratio, which in turn changes when the effective stress changes. If the void ratio is changed, the hydraulic conductivity of the test specimen will likely change. To determine the relationship between hydraulic conductivity and void ratio, the hydraulic conductivity test would have to be repeated at different effective stresses.

4.6 The correlation between results obtained with this test method and the hydraulic conductivities of in-place field materials has not been fully investigated. Experience has sometimes shown that flow patterns in small test specimens do not necessarily follow the same patterns on large field scales and that hydraulic conductivities measured on small test specimens are not necessarily the same as larger-scale values. Therefore, the results should be applied to field situations with caution and by qualified personnel.

5. Apparatus

5.1 *Hydraulic System*—Constant head (Method A), falling head (Methods B and C), or constant rate of flow (Method D) systems may be utilized provided they meet the criteria outlined as follows:

5.1.1 *Constant Head*—The system must be capable of maintaining constant hydraulic pressures to within ±5 % and shall include means to measure the hydraulic pressures to within the prescribed tolerance. In addition, the head loss across the test specimen must be held constant to within ±5 % and shall be measured with the same accuracy or better. Pressures shall be measured by a pressure gage, electronic pressure transducer, or any other device of suitable accuracy.

5.1.2 *Falling Head*—The system shall allow for measurement of the applied head loss, thus hydraulic gradient, to within 5 % or better at any time. In addition, the ratio of initial head loss divided by final head loss over an interval of time shall be measured such that this computed ratio is accurate to within ±5 %. The head loss shall be measured with a pressure gage, electronic pressure transducer, engineer's scale, graduated pipette, or any other device of suitable accuracy. Falling head tests may be performed with either a constant tailwater elevation (Method B) or a rising tailwater elevation (Method C).

5.1.3 *Constant Rate of Flow*—The system must be capable of maintaining a constant rate of flow through the specimen to within 5 % or better. Flow measurement shall be by calibrated syringe, graduated pipette, or other device of suitable accuracy. The head loss across the specimen shall be measured to an accuracy of 5 % or better using an electronic pressure transducer or other device of suitable accuracy. More information on testing with a constant rate of flow is given in the literature.[5]

5.1.4 *System De-airing*—The hydraulic system shall be designed to facilitate rapid and complete removal of free air bubbles from flow lines.

5.1.5 *Back Pressure System*—The hydraulic system shall have the capability to apply back pressure to the specimen to facilitate saturation. The system shall be capable of maintaining the applied back pressure throughout the duration of hydraulic conductivity measurements. The back pressure system shall be capable of applying, controlling, and measuring the back pressure to 5 % or better of the applied pressure. The back pressure may be provided by a compressed gas supply, a deadweight acting on a piston, or any other method capable of applying and controlling the back pressure to the tolerance prescribed in this paragraph.

NOTE 1—Application of gas pressure directly to a fluid will dissolve gas in the fluid. A variety of techniques are available to minimize dissolution of gas in the back pressure fluid, including separation of gas and liquid phases with a bladder and frequent replacement of the liquid with de-aired water.

5.2 *Flow Measurement System*—Both inflow and outflow volumes shall be measured unless the lack of leakage, continuity of flow, and cessation of consolidation or swelling can be verified by other means. Flow volumes shall be measured by a graduated accumulator, graduated pipette, vertical standpipe in conjunction with an electronic pressure transducer, or other volume-measuring device of suitable accuracy.

5.2.1 *Flow Accuracy*—Required accuracy for the quantity of flow measured over an interval of time is 5 % or better.

5.2.2 *De-airing and Compliance of the System*—The flow-measurement system shall contain a minimum of dead space and be capable of complete and rapid de-airing. Compliance of the system in response to changes in pressure shall be minimized by using a stiff flow measurement system. Rigid tubing, such as metallic or rigid thermoplastic tubing, shall be used.

5.2.3 *Head Losses*—Head losses in the tubes, valves, porous end pieces, and filter paper may lead to error. To guard against such errors, the permeameter shall be assembled with no specimen inside and then the hydraulic system filled. If a constant or falling head test is to be used, the hydraulic pressures or heads that will be used in testing a specimen shall be applied, and the rate of flow measured with an accuracy of 5 % or better. This rate of flow shall be at least ten times greater than the rate of flow that is measured when a specimen is placed inside the permeameter and the same hydraulic pressures or heads are applied. If a constant rate of flow test is to be used, the rate of flow to be used in testing a specimen shall be supplied to the permeameter and the head loss measured. The head loss without a specimen shall be less than 0.1 times the head loss when a specimen is present.

5.3 *Permeameter Cell Pressure System*—The system for pressurizing the permeameter cell shall be capable of applying and controlling the cell pressure to within 5 % of the applied pressure. However, the effective stress on the test specimen (which is the difference between the cell pressure and the pore water pressure) shall be maintained to the desired value with an accuracy of 10 % or better. The device for pressurizing the cell may consist of a reservoir connected to the permeameter cell and partially filled with de-aired

[5] Olson, H. W., Morin, R. H., and Nichols, R. W., "Flow Pump Applications in Triaxial Testing," *Symposium on Advanced Triaxial Testing of Soil and Rock, ASTM STP 977*, ASTM, 1988, pp. 68–81.

261

water, with the upper part of the reservoir connected to a compressed gas supply or other source of pressure (see Note 2). The gas pressure shall be controlled by a pressure regulator and measured by a pressure gage, electronic pressure transducer, or any other device capable of measuring to the prescribed tolerance. A hydraulic system pressurized by deadweight acting on a piston or any other pressure device capable of applying and controlling the permeameter cell pressure to the tolerance prescribed in this paragraph may be used.

NOTE 2—De-aired water is commonly used for the cell fluid to minimize potential for diffusion of air through the membrane into the specimen. Other fluids, such as oils, which have low gas solubilities are also acceptable, provided they do not react with components of the permeameter. Also, use of a long (approximately 5 to 7 m) tube connecting the pressurized cell liquid to the cell helps to delay the appearance of air in the cell fluid and to reduce the flux of dissolved air into the cell.

5.4 *Permeameter Cell*—An apparatus shall be provided in which the specimen and porous end pieces, enclosed by a membrane sealed to the cap and base, are subjected to controlled fluid pressures. A schematic diagram of a typical cell is shown in Fig. 1.

5.4.1 The permeameter cell may allow for observation of changes in height of the specimen, either by observation through the cell wall using a cathetometer or other instrument, or by monitoring of either a loading piston or an extensometer extending through the top plate of the cell resting on the top cap and attached to a dial indicator or other measuring device. The piston or extensometer should pass through a bushing and seal incorporated into the top plate and shall be loaded with sufficient force to compensate for the cell pressure acting over the cross-sectional area of the piston where it passes through the seal. If deformations are measured, the deformation indicator shall be a dial indicator or cathetometer graduated to 0.3 mm (0.01 in.) or better and having an adequate travel range. Any other measuring device meeting these requirements is acceptable.

5.4.2 In order to facilitate gas removal, and thus saturation of the hydraulic system, four drainage lines leading to the specimen, two each to the base and top cap, are recommended. The drainage lines shall be controlled by no-volume-change valves, such as ball valves, and shall be designed to minimize dead space in the lines.

5.5 *Top Cap and Base*—An impermeable, rigid top cap and base shall be used to support the specimen and provide for transmission of permeant liquid to and from the specimen. The diameter or width of the top cap and base shall be equal to the diameter or width of the specimen ±5 %. The base shall prevent leakage, lateral motion, or tilting, and the top cap shall be designed to receive the piston or extensometer, if used, such that the piston-to-top cap contact area is concentric with the cap. The surface of the base and top cap that contacts the membrane to form a seal shall be smooth and free of scratches.

5.6 *Flexible Membranes*—The flexible membrane used to encase the specimen shall provide reliable protection against leakage. The membrane shall be carefully inspected prior to use and if any flaws or pinholes are evident, the membrane shall be discarded. To minimize restrain to the specimen, the diameter or width of the unstretched membrane shall be

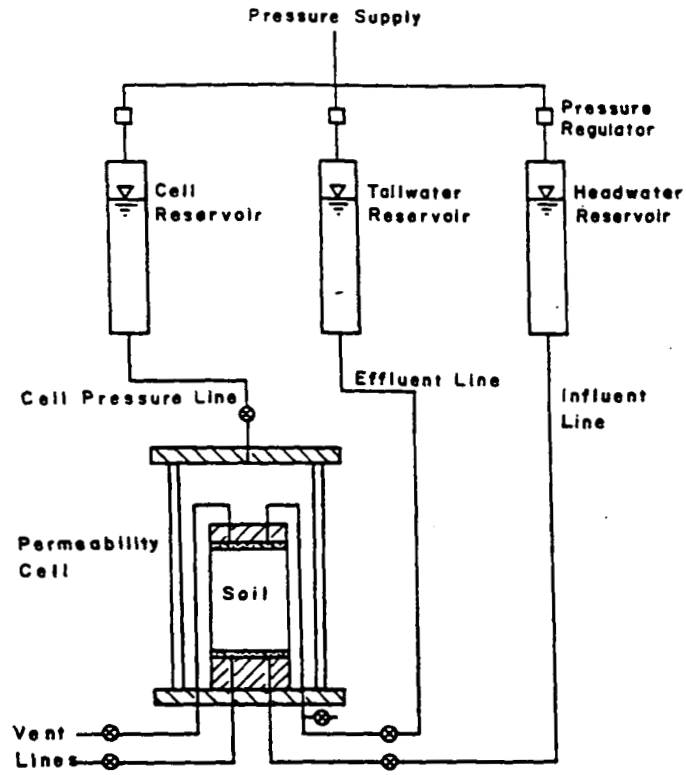

FIG. 1 Permeameter Cell

between 90 and 95 % of that of the specimen. The membrane shall be sealed to the specimen base and cap with rubber O-rings for which the unstressed, inside diameter or width is less than 90 % of the diameter or width of the base and cap, or by any other method that will produce an adequate seal.

NOTE 3—Membranes may be tested for flaws by placing them around a form sealed at both ends with rubber O-rings, subjecting them to a small air pressure on the inside, and then dipping them into water. If air bubbles come up from any point on the membrane, or if any visible flaws are observed, the membrane shall be discarded.

5.7 *Porous End Pieces*—The porous end pieces shall be of silicon carbide, aluminum oxide, or other material that is not attacked by the specimen or permeant liquid. The end pieces shall have plane and smooth surfaces and be free of cracks, chips, and nonuniformities. They shall be checked regularly to ensure that they are not clogged.

5.7.1 The porous end pieces shall be the same diameter or width (±5 %) as the specimen, and the thickness shall be sufficient to prevent breaking.

5.7.2 The hydraulic conductivity of the porous end pieces shall be significantly greater than that of the specimen to be tested. The requirements outlined in 5.2.3 ensure this.

5.8 *Filter Paper*—If necessary to prevent intrusion of material into the pores of the porous end pieces, one or more sheets of filter paper shall be placed between the top and bottom porous end pieces and the specimen. The paper shall have a negligibly small hydraulic impedance. The requirements outlined in 5.2.3 ensure that the impedance is small.

5.9 *Equipment for Compacting a Specimen*—Equipment (including compactor and mold) suitable for the method of compaction specified by the requester shall be used.

5.10 *Sample Extruder*—When the material being tested is a soil core, the soil core shall usually be removed from the sampler with an extruder. The sample extruder shall be capable of extruding the soil core from the sampling tube in the same direction of travel in which the sample entered the tube and with minimum disturbance of the sample. If the soil core is not extruded vertically, care should be taken to avoid bending stresses on the core due to gravity. Conditions at the time of sample extrusion may dictate the direction of removal, but the principal concern is to keep the degree of disturbance minimal.

5.11 *Trimming Equipment*—Specific equipment for trimming the specimen to the desired dimensions will vary depending on quality and characteristics of the sample; however, the following items listed may be used: lathe, wire saw with a wire about 0.3 mm (0.01 in.) in diameter, spatulas, knives, steel rasp for very hard clay specimens, cradle or split mold for trimming specimen ends, and steel straight edge for final trimming of specimen ends.

5.12 *Devices for Measuring the Dimensions of the Specimen*—Devices used to measure the dimensions of the specimen shall be capable of measuring to the nearest 0.3 mm (0.01 in.) or better and shall be constructed such that their use will not disturb the specimen.

5.13 *Balances*—The balance shall be suitable for determining the mass of the specimen and shall be selected as discussed in Specification D 4753. The mass of specimens less than 100 g shall be determined to the nearest 0.01 g. The mass of specimens 100 g or larger shall be determined to the nearest 0.1 g. The mass of specimens >1000 g shall be determined to the nearest 1.0 g.

5.14 *Equipment for Mounting the Specimen*—Equipment for mounting the specimen in the permeameter cell shall include a membrane stretcher or cylinder, and ring for expanding and placing O-rings on the base and top cap to seal the membrane.

5.15 *Vacuum Pump*—To assist with de-airing of permeameter system and saturation of specimens.

5.16 *Temperature Maintaining Device*—The temperature of the permeameter, test specimen, and reservoir of permeant liquid shall not vary more than ±3°C (±5.7°F). Normally, this is accomplished by performing the test in a room with a relatively constant temperature. If such a room is not available, the apparatus shall be placed in a water bath, insulated chamber, or other device that maintains a temperature within the tolerance specified in 5.16. The temperature shall be periodically measured and recorded.

5.17 *Water Content Containers*—The containers shall be in accordance with Method D 2216.

5.18 *Drying Oven*—The oven shall be in accordance with Specification E 145.

6. Reagents

6.1 *Permeant Water:*

6.1.1 The permeant water is the liquid used to permeate the test specimen and is also the liquid used in backpressuring the specimen.

1.2 The type of permeant water should be specified by the requestor. If no specification is made, tap water shall be used for the permeant liquid. The type of water utilized shall be indicated in the report.

NOTE 4—Chemical interactions between a permeant liquid and the porous material may lead to variations in hydraulic conductivity. Distilled water can significantly lower the hydraulic conductivity of clayey soils (see the literature).[4] For this reason, distilled water is not usually recommended as a permeant liquid. A permeant liquid used by some is 0.005 N $CaSO_4$, which can be obtained for example, by dissolving 6.8 g of nonhydrated, reagent-grade $CaSO_4$ in 10 L of de-aired, distilled water. This $CaSO_4$ solution is thought to neither increase nor decrease significantly the hydraulic conductivity of clayey soils. In areas with extremely brackish tap water, the $CaSO_4$ solution is recommended.

6.1.3 *Deaired Water*—To aid in removing as much air from the test specimen as possible, deaired water shall be used. The water is usually deaired by boiling, by spraying a fine mist of water into an evacuated vessel attached to a vacuum source, or by forceful agitation of water in a container attached to a vacuum source. If boiling is used, care shall be taken not to evaporate an excessive amount of water, which can lead to a larger salt concentration in the permeant water than desired. To prevent dissolution of air back into the water, deaired water shall not be exposed to air for prolonged periods.

7. Test Specimens

7.1 *Size*—Specimens shall have a minimum diameter of 25 mm (1.0 in.) and a minimum height of 25 mm. The height and diameter of the specimen shall be measured to the nearest 0.3 mm (0.01 in.) or better. The length and diameter shall vary by no more than ±5 %. The surface of the test specimen may be uneven, but indentations must not be so deep that the length or diameter vary by more than ±5 %. The diameter and height of the specimen shall each be at least 6 times greater than the largest particle size within the specimen. If, after completion of a test, it is found based on visual observation that oversized particles are present, that information shall be indicated on the report.

NOTE 5—Most hydraulic conductivity tests are performed on cylindrical test specimens. It is possible to utilize special equipment for testing prismatic test specimens, in which case reference to "diameter" in 7.1 applies to the least width of the prismatic test specimen.

7.2 *Undisturbed Specimens*—Undisturbed test specimens shall be prepared from a representative portion of undisturbed samples secured in accordance with Practice D 1587 or Practice D 2113, and preserved and transported in accordance with requirements for Group C materials in Practice D 4220. Specimens obtained by tube sampling or coring may be tested without trimming except for cutting the end surfaces plane and perpendicular to the longitudinal axis of the specimen, provided soil characteristics are such that no significant disturbance results from sampling. Where the sampling operation has caused disturbance of the soil, the disturbed material shall be trimmed. Where removal of pebbles or crumbling resulting from trimming causes voids on the surface of the specimen that cause the length or diameter to vary by more than ±5 %, the voids shall be filled with remolded material obtained from the trimmings. The ends of the test specimen shall be cut and not troweled (troweling can seal off cracks, slickensides, or other secondary features that might conduct water flow). Specimens shall be trimmed, whenever possible, in an environment where changes in moisture content are minimized. A controlled high-humidity room is usually used for this purpose. The mass and dimensions of the test specimen shall be

263

determined to the tolerances given in 5.12 and 5.13. The test specimen shall be mounted immediately in the permeameter. The water content of the trimmings shall be determined in accordance with Method D 2216.

7.3 *Laboratory-Compacted Specimens*—The material to be tested shall be prepared and compacted inside a mold in a manner specified by the requestor. If the specimen is placed and compacted in layers, the surface of each previously-compacted layer shall be lightly scarified (roughened) with a fork, ice pick, or other suitable object, unless the requester specifically states that scarification is not to be performed. Test Methods D 698 and D 1557 describe two methods of compaction, but any other method specified by the requestor may be used as long as the method is described in the report. Large clods of material should not be broken down prior to compaction unless it is known that they will be broken in field construction, as well, or the requestor specifically requests that the clod size be reduced. Neither hard clods nor individual particles of the material shall exceed ⅙ of either the height or diameter of the specimen. After compaction, the test specimen shall be removed from the mold, the ends scarified, and the dimensions and weight determined within the tolerances given in 5.12 and 5.13. After the dimensions and mass are determined, the test specimen shall be immediately mounted in the permeameter. The water content of the trimmings shall be determined in accordance with Method D 2216.

7.4 *Other Preparation Methods*—Other methods of preparation of a test specimen are permitted if specifically requested. The method of specimen preparation shall be identified in the report.

7.5 After the height, diameter, mass, and water content of the test specimen have been determined, the dry unit weight shall be calculated. Also, the initial degree of saturation shall be estimated (this information may be used later in the backpressure stage).

8. Procedure

8.1 *Specimen Setup:*

8.1.1 Cut two filter paper sheets to approximately the same shape as the cross section of the test specimen. Soak the two porous end pieces and filter paper sheets, if used, in a container of permeant water.

8.1.2 Place the membrane on the membrane expander. Apply a thin coat of silicon high-vacuum grease to the sides of the end caps. Place one porous end piece on the base and place one filter paper sheet, if used, on the porous end piece, followed by the test specimen. Place the second filter paper sheet, if used, on top of the specimen followed by the second porous end piece and the top cap. Place the membrane around the specimen, and using the membrane expander or other suitable O-ring expander, place one or more O-rings to seal the membrane to the base and one or more additional O-rings to seal the membrane to the top cap.

8.1.3 Attach flow tubing to the top cap, if not already attached, assemble the permeameter cell, and fill it with de-aired water or other cell fluid. Attach the cell pressure reservoir to the permeameter cell line and the hydraulic system to the influent and effluent lines. Fill the cell pressure reservoir with deaired water, or other suitable liquid, and the hydraulic system with deaired permeant water. Apply a small

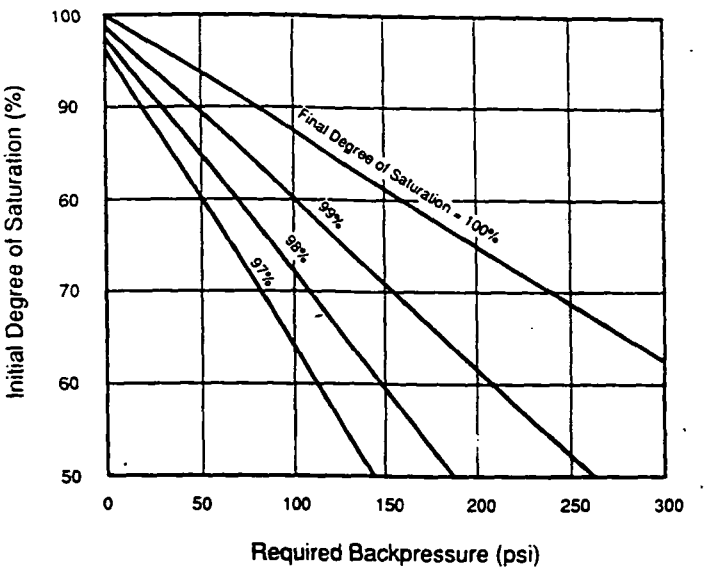

FIG. 2 Back Pressure to Attain Various Degrees of Saturation[6]

confining pressure of 7 to 35 kPa (1 to 5 psi) to the cell and apply a pressure less than the confining pressure to both the influent and effluent systems, and flush permeant water through the flow system. After all visible air has been removed from the flow lines, close the control valves. At no time during saturation of the system and specimen or hydraulic conductivity measurements shall the maximum applied effective stress be allowed to exceed that to which the specimen is to be consolidated.

8.2 *Specimen Soaking (Optional)*—To aid in saturation, specimens may be soaked under partial vacuum applied to the top of the specimen. Atmospheric pressure shall be applied to the specimen base through the influent lines, and the magnitude of the vacuum set to generate a hydraulic gradient across the sample less than that which will be used during hydraulic conductivity measurements.

NOTE 6—Soaking under vacuum is applicable when there are continuous air voids in the specimen. Soaking under vacuum is only recommended for test specimens with initial degrees of saturation below 70 %. The specimen may swell when exposed to water; the effective stress will tend to counteract the swelling. However, for materials that tend to swell, unless the applied effective stress is greater than or equal to the swell pressure, the specimen will swell.

8.3 *Backpressure Saturation*—To saturate the specimen, backpressuring is usually necessary. Figure 2 provides guidance on back pressure required to attain saturation.

NOTE 7—Figure 2 assumes that the water used for back pressure is deaired and that the only source for air to dissolve into the water is air from the test specimen. If air pressure is used to control the back pressure, pressurized air will dissolve into the water, thus reducing the capacity of the water used for back pressure to dissolve air located in the pores of the test specimen. The problem is minimized by using a long (>5 m) tube that is impermeable to air between the air-water interface and test specimen, by separating the back-pressure water from the air by a material or fluid that is relatively impermeable to air, by periodically replacing the back-pressure water with deaired water, or by other means.

[6] Lowe, J., and Johnson, T. C., "Use of Back Pressure to Increase Degree of Saturation of Triaxial Test Specimens," *Proceedings, ASCE Research Conference on Shear Strength of Cohesive Soils*, Boulder, CO, 1960.

8.3.1 Open the flow line valves and flush out of the system any free air bubbles using the procedure outlined in 8.1.3. If lectronic pressure transducer or other measuring device is to be used during the test to measure pore pressures or applied hydraulic gradient, it should be bled of any trapped air. Take and record an initial reading of specimen height, if being monitored.

8.3.2 Adjust the applied confining pressure to the value to be used during saturation of the sample. Apply backpressure by simultaneously increasing the cell pressure and the influent and effluent pressures in increments. The maximum value of an increment in backpressure shall be sufficiently low so that no point in the specimen is exposed to an effective stress in excess of that to which the specimen will be subsequently consolidated. At no time shall a head be applied so that the effective confining stress is <7 kPa (1 psi) because of the danger of separation of the membrane from the test specimen. Maintain each increment of pressure for a period of a few minutes to a few hours, depending upon the characteristics of the specimen. To assist in removal of trapped air, a small hydraulic gradient may be applied across the specimen to induce flow.

8.3.3 Saturation shall be verified with one of the three following techniques:

8.3.3.1 Saturation may be verified by measuring the *B* coefficient as described in Test Method D 4767 (see Note 8). The test specimen shall be considered to be adequately saturated if (*1*) the *B* value is ≥0.95, or (*2*) for relatively incompressible materials, for example, rock, if the *B* value remains unchanged with application of larger values of back ure. The *B* value may be measured prior to or after completion of the consolidation phase (see 8.4). Accurate *B*-value determination can only be made if no gradient is acting on the specimen and all pore pressure induced by consolidation has dissipated.

NOTE 8—The *B* coefficient is defined for this type of test as the change in pore water pressure in the porous material divided by the change in confining pressure. Compressible materials that are fully saturated with water will have a *B* value of 1.0. Relatively incompressible, saturated materials have *B* values which are somewhat less than 1.0.

8.3.3.2 Saturation of the test specimen may be confirmed at the completion of the test by calculation of the final degree of saturation. The final degree of saturation shall be 100 ± 5 %. However, measurement of the *B* coefficient as described in 8.3.3.1 or use of some other technique (8.3.3.3) is strongly recommended because it is much better to confirm saturation prior to permeation than to wait until after the test to determine if the test was valid.

8.3.3.3 Other means for verifying saturation, such as measurement of the volume change of the specimen when the pore water pressure has been changed, can be used for verifying saturation provided data are available for similar materials to establish that the procedure used confirms saturation as required in 8.3.3.1 or 8.3.3.2.

8.4 *Consolidation*—The specimen shall be consolidated to the effective stress specified by the requestor. Consolidation may be accomplished in stages, if desired.

TE 9—The test specimen may be consolidated prior to application of backpressure. Also, the backpressure and consolidation phases may be completed concurrently if backpressures are applied sufficiently slowly to minimize potential for overconsolidation of the specimen.

8.4.1 Record the specimen height, if being monitored, prior to application of consolidation pressure and periodically during consolidation.

8.4.2 Increase the cell pressure to the level necessary to develop the desired effective stress, and begin consolidation. Drainage may be allowed from the base or top of the specimen, or simultaneously from both ends.

8.4.3 (Optional) Record outflow volumes to confirm that primary consolidation has been completed prior to initiation of the hydraulic conductivity test. Alternatively, measurements of the change in height of the test specimen can be used to confirm completion of consolidation.

NOTE 10—The procedure in 8.4.3 is optional because the requirements of 8.5 ensure that the test specimen is adequately consolidated during permeation because if it is not, inflow and outflow volumes will differ significantly. However, for accurate *B*-value determination, completion of consolidation should be confirmed (see 8.3.3.1). It is recommended that outflow volumes or height changes be recorded as a means for verifying the completion of consolidation prior to initialization of permeation. Also, measurements in the change in height of the test specimen, coupled with knowledge of the initial height, provide a means for checking the final height of the specimen.

8.5 *Permeation:*

8.5.1 *Hydraulic Gradient*—When possible, the hydraulic gradient used for hydraulic conductivity measurements should be similar to that expected to occur in the field. In general, hydraulic gradients from <1 to 5 cover most field conditions. However, the use of small hydraulic gradients can lead to very long testing times for materials having low hydraulic conductivity (less than about 1×10^{-6} cm/s). Somewhat larger hydraulic gradients are usually used in the laboratory to accelerate testing, but excessive gradients must be avoided because high seepage pressures may consolidate the material, material may be washed from the specimen, or fine particles may be washed downstream and plug the effluent end of the test specimen. These effects could increase or decrease hydraulic conductivity. If no gradient is specified by the requestor, the following guidelines may be followed:

Hydraulic Conductivity, cm/s	Recommended Maximum Hydraulic Gradient
1×10^{-3} to 1×10^{-4}	2
1×10^{-4} to 1×10^{-5}	5
1×10^{-5} to 1×10^{-6}	10
1×10^{-6} to 1×10^{-7}	20
less than 1×10^{-7}	30

NOTE 11—Seepage pressures associated with large hydraulic gradients can consolidate soft, compressible specimens and reduce their hydraulic conductivity. It may be necessary to use smaller hydraulic gradients (<10) for such specimens.

8.5.2 *Initialization*—Initiate permeation of the specimen by increasing the influent pressure (see 8.3.2). The effluent pressure shall not be decreased because air bubbles that were dissolved by the specimen water during backpressuring may come out of solution if the pressure is decreased. The back pressure shall be maintained throughout the permeation phase.

8.5.3 *Constant Head Test (Method A)*—Measure and record the required head loss across the test specimen to the tolerances stated in 5.1.1 and 5.2.3. The head loss across the specimen shall be kept constant ±5 %. Measure and record periodically the quantity of inflow as well as the quantity of outflow. Also measure and record any changes in height of the test specimen, if being monitored (see Note 11). Con-

265

tinue permeation until at least four values of hydraulic conductivity are obtained over an interval of time in which: (*1*) the ratio of outflow to inflow rate is between 0.75 and 1.25, and (*2*) the hydraulic conductivity is steady. The hydraulic conductivity shall be considered steady if four or more consecutive hydraulic conductivity determinations fall within ±25 % of the mean value for $k \geq 1 \times 10^{-10}$ m/s or within ±50 % for $k < 1 \times 10^{-10}$ m/s, and a plot of the hydraulic conductivity versus time shows no significant upward or downward trend.

8.5.4 *Falling-Head Tests (Methods B and C)*—Measure and record the required head loss across the test specimen to the tolerances stated in 5.1.2. For falling-head tests, at no time shall the applied head loss across the specimen be less than 75 % of the initial (maximum) head loss during each individual hydraulic conductivity determination (see Note 12). Periodically measure and record any changes in the height of the specimen, if being monitored. Continue permeation until at least four values of hydraulic conductivity are obtained over an interval of time in which: (*1*) the ratio of outflow to inflow rate is between 0.75 and 1.25, and (*2*) the hydraulic conductivity is steady (see 8.5.3).

NOTE 12—When the water pressure in a test specimen changes and the applied total stress is constant, the effective stress in the test specimen changes, which can cause volume changes that can invalidate the test results. The requirement that the head loss not decrease very much is intended to keep the effective stress from changing too much. For extremely soft, compressible test specimens, even more restrictive criteria might be needed. Also, when the initial and final head losses across the test specimen do not differ by much, great accuracy is needed to comply with the requirement of 5.1.2 that the ratio of initial to final head loss be determined with an accuracy of ±5 % or better. When the initial and final head loss over an interval of time do not differ very much, it may be possible to comply with the requirements for a constant head test (8.5.3) in which the head loss must not differ by more than ±5 % and to treat the test as a constant head test.

8.5.4.1 *Test with Constant Tailwater Level (Method B)*—If the water pressure at the downstream (tailwater) end of the test specimen is kept constant, periodically measure and record either the quantity of inflow or the level of water in the influent standpipe; measure and record the quantity of outflow from the test specimen.

8.5.4.2 *Test with Increasing Tailwater Level (Method C)*—If the water pressure at the downstream end of the test specimen rises during an interval of time, periodically measure and record either the quantity or inflow and outflow or the changes in water levels in the influent and effluent standpipes.

8.5.5 *Constant Rate of Flow Tests (Method D)*—Initiate permeation of the specimen by imposing a constant flow rate. Choose the flow rate so the hydraulic gradient does not exceed the value specified, or if none is specified, the value recommended in 8.5.1. Periodically measure the rate of inflow, the rate of outflow, and head loss across the test specimen to the tolerances given in 5.1.3. Also, measure and record any changes in specimen height, if being monitored. Continue permeation until at least four values of hydraulic conductivity are obtained over an interval of time in which (*1*) the ratio of inflow to outflow rates is between 0.75 and 1.25, and (*2*) hydraulic conductivity is steady (see 8.5.3).

8.6 *Final Dimensions of the Specimen*—After completion of permeation, reduce the applied confining, influent, and effluent pressures in a manner that does not generate significant volume change of the test specimen. Then carefully disassemble the permeater cell and remove the specimen. Measure and record the final height, diameter, and total mass of the specimen. Then determine the final water content of the specimen by the procedure of Method D 2216. Dimensions and mass of the test specimen shall be measured to the tolerances specified in 5.13 and 7.1.

NOTE 13—The specimen may swell after removal of back pressure as a result of air coming out of solution. A correction may be made for this effect, provided that changes in the length of the specimen are monitored during the test. The strain caused by dismantling the cell is computed from the length of the specimen before and after dismantling the cell. The same strain is assumed to have occurred in the diameter. The corrected diameter and actual length before the back pressure was removed are used to compute the volume of the test specimen prior to dismantling the cell. The volume prior to dismantling the cell is used to determine the final dry density and degree of saturation.

9. Calculation

9.1 *Constant Head and Constant Rate of Flow Tests (Methods A and D)*—Calculate the hydraulic conductivity, k, as follows:

$$k = QL/Ath \tag{1}$$

where:

k = hydraulic conductivity, m/s,
Q = quantity of flow, taken as the average of inflow and outflow, m^3,
L = length of specimen along path of flow, m,
A = cross-sectional area of specimen, m^2,
t = interval of time, s, over which the flow Q occurs, and
h = difference in hydraulic head across the specimen, m of water.

9.2 *Falling-Head Tests:*

9.2.1 *Constant Tailwater Pressure (Method B)*—Calculate the hydraulic conductivity, k, as follows:

$$k = \frac{aL}{At} \ln\left(\frac{h_1}{h_2}\right) \tag{2}$$

where:

a = cross-sectional area of the reservoir containing the influent liquid, m^2,
L = length of the specimen, m,
A = cross-sectional area of the specimen, m^2,
t = elapsed time between determination of h_1 and h_2, s,
h_1 = head loss across the specimen at time t_1, m, and
h_2 = head loss across the specimen at time t_2, m.

9.2.2 *Increasing Tailwater Pressure (Method C)*—Calculate the hydraulic conductivity, k, as follows:

$$k = \frac{a_{in}\, a_{out}\, L}{A\, t\, (a_{in} + a_{out})} \ln(h_1/h_2) \tag{3}$$

where:

a_{in} = cross-sectional area of the reservoir containing the influent liquid, m^2,
a_{out} = cross-sectional area of the reservoir containing the effluent liquid, m^2,
L = length of the specimen, m,
A = cross-sectional area of the specimen, m^2,
t = elapsed time between determination of h_1 and h_2, s,
h_1 = head loss across the specimen at time t, m, and
h_2 = head loss across the specimen at time t_2, m.

NOTE 14—For the case in which $a_{out} = a_{in} = a$, the equation for calculating k for a falling head test with a rising tailwater level is:

$$k = \frac{a\,L}{-2\,A\,t} \ln\left(\frac{h_1}{h_2}\right) \quad (4)$$

9.3 Correct the hydraulic conductivity to that for 20°C (68°F), k_{20}, by multiplying k by the ratio of the viscosity of water at test temperature to the viscosity of water at 20°C (68°F), R_T, from Table 1, as follows:

$$k_{20} = R_T k \quad (5)$$

10. Report

10.1 Report the following information:

10.1.1 Sample identifying information,

10.1.2 Any special selection and preparation process, such as removal of stones or other materials, or indication of their presence, if undisturbed specimen,

10.1.3 Descriptive information on method of compaction,

10.1.4 Initial dimensions of the specimen,

10.1.5 Initial water content and dry unit weight of the specimen,

10.1.6 Type of permeant liquid used,

10.1.7 Magnitude of total back pressure,

10.1.8 Maximum and minimum effective consolidation stress,

NOTE 15—The maximum effective stress exists at the effluent end of the test specimen and the minimum stress at the influent end.

10.1.9 Height of specimen after completion of consolidation, if monitored,

10.1.10 Range of hydraulic gradient used,

10.1.11 Final length, diameter, water content, dry unit weight, and degree of saturation of the test specimen,

10.1.12 Average hydraulic conductivity for the last four determinations of hydraulic conductivity (obtained as described in 8.5.3 to 8.5.5), reported with two significant figures, for example, 7.1×10^{-10} m/s, and reported in units of m/s (plus additional units, if requested or customary),

10.1.13 Graph or table of hydraulic conductivity versus time or pore volumes of flow is recommended.

TABLE 1 Correction Factor R_T for Viscosity of Water at Various Temperatures[A]

Temperature, °C	R_T	Temperature, °C	R_T
0	1.783	25	0.889
1	1.723	26	0.869
2	1.664	27	0.850
3	1.611	28	0.832
4	1.560	29	0.814
5	1.511	30	0.797
6	1.465	31	0.780
7	1.421	32	0.764
8	1.379	33	0.749
9	1.339	34	0.733
10	1.301	35	0.719
11	1.265	36	0.705
12	1.230	37	0.692
13	1.197	38	0.678
14	1.165	39	0.665
15	1.135	40	0.653
16	1.106	41	0.641
17	1.077	42	0.629
18	1.051	43	0.618
19	1.025	44	0.607
20	1.000	45	0.598
21	0.976	46	0.585
22	0.953	47	0.575
23	0.931	48	0.565
24	0.910	49	0.556

[A] $R_T = (-0.02452\,T + 1.495)$ where T is the degrees celsius.

11. Precision and Bias

11.1 *Precision*—Data are being evaluated to determine the precision of this test method. In addition, Subcommittee D18.04 on Hydrologic Properties of Soil and Rocks, is seeking pertinent data from users of this test method.

11.2 *Bias*—There is no accepted reference value for this test method, therefore, bias cannot be determined.

12. Keywords

12.1 coefficient of permeability; hydraulic barriers; hydraulic conductivity; liner; permeameter

The American Society for Testing and Materials takes no position respecting the validity of any patent rights asserted in connection with any item mentioned in this standard. Users of this standard are expressly advised that determination of the validity of any such patent rights, and the risk of infringement of such rights, are entirely their own responsibility.

This standard is subject to revision at any time by the responsible technical committee and must be reviewed every five years and if not revised, either reapproved or withdrawn. Your comments are invited either for revision of this standard or for additional standards and should be addressed to ASTM Headquarters. Your comments will receive careful consideration at a meeting of the responsible technical committee, which you may attend. If you feel that your comments have not received a fair hearing you should make your views known to the ASTM Committee on Standards, 1916 Race St., Philadelphia, PA 19103.

267

Designation: D 5299 – 92

Standard Guide for Decommissioning of Ground Water Wells, Vadose Zone Monitoring Devices, Boreholes, and Other Devices for Environmental Activities[1]

This standard is issued under the fixed designation D 5299; the number immediately following the designation indicates the year of original adoption or, in the case of revision, the year of last revision. A number in parentheses indicates the year of last reapproval. A superscript epsilon (ε) indicates an editorial change since the last revision or reapproval.

1. Scope

1.1 This guide covers procedures that are specifically related to permanent decommissioning (closure) of the following as applied to environmental activities. It is intended for use where solid or hazardous materials or wastes are found, or where conditions occur requiring the need for decommissioning. The following devices are considered in this guide:

1.1.1 A borehole used for geoenvironmental purposes (see Note 1),

1.1.2 Monitoring wells,

1.1.3 Observation wells,

1.1.4 Injection wells (see Note 2),

1.1.5 Piezometers,

1.1.6 Wells used for the extraction of contaminated ground water, the removal of floating or submerged materials other than water such as gasoline or tetrachloroethylene, or other devices used for the extraction of soil gas,

1.1.7 A borehole used to construct a monitoring well, and

1.1.8 Any other vadose zone monitoring device.

1.2 Temporary decommissioning of the above is not covered in this guide.

NOTE 1—This guide may be used to decommission boreholes where no contamination is observed at a site (see Practice D 420 for details); however, the primary use of the guide is to decommission boreholes and wells where solid or hazardous waste have been identified. Methods identified in this guide can also be used in other situations such as the decommissioning of water supply wells and boreholes where water contaminated with nonhazardous pollutants (such as nitrates or sulfates) are present. This guide should be consulted in the event that a routine geotechnical investigation indicates the presence of contamination at a site.

NOTE 2—The term "well" is used in this guide to denote monitoring wells, piezometers, or other devices constructed in a manner similar to a well. Some of the devices listed such as injection and extraction wells can be decommissioned using this guide for information, but are not specifically covered in the text.

NOTE 3—Details on the decommissioning of multiple-screened wells are not provided in this guide due to the many methods used to construct these types of wells and the numerous types of commercially available multiple-screened well systems. However, in some instances, the methods presented in this guide may be used with few changes. An example of how this guide may be used is the complete removal of the multiple-screened wells by overdrilling.

1.3 Most monitoring wells and piezometers are intended primarily for water quality sampling, water level observation, or soil gas sampling, or combination thereof, to determine quality. Many wells are relatively small in diameter (<4-in. (10.1 cm) inside diameter) and are used to monitor for hazardous chemicals in ground water. Decommissioning of monitoring wells is necessary to:

1.3.1 Eliminate the possibility that the well is used for purposes other than intended,

1.3.2 Prevent migration of contaminants into an aquifer or between aquifers,

1.3.3 Prevent migration of contaminants in the vadose zone,

1.3.4 Reduce the potential for vertical or horizontal migration of fluids in the well or adjacent to the well, and

1.3.5 Remove the well from active use when the well is no longer capable of rehabilitation, or has failed structurally; no longer required for monitoring; no longer capable of providing representative samples or is providing unreliable samples; or required to be decommissioned; or to meet regulatory requirements.

NOTE 4—The determination of whether a well is providing a representative water quality sample is not defined in this guide. Examples of when a representative water quality sample may not be collected include the biological or chemical clogging of well screens, a drop in water level to below the base of the well screen, or complete silting of a tail pipe. These conditions may indicate that a well is not functioning properly.

1.4 This guide is intended to provide information for effective permanent closure of wells so that the physical structure of the well does not provide a means of hydraulic communication between aquifers or react chemically in a detrimental way with the environment.

1.5 The intent of this guide is to provide procedures that when followed result in a reasonable level of confidence in the integrity of the decommissioning activity. However, it may not be possible to verify the integrity of the decommissioning procedure. At this time, methods are not available to substantially determine the integrity of the decommissioning activity.

1.6 The values stated in inch-pound units are to be regarded as the standard. The SI units given in parentheses are for information only.

1.7 *This standard does not purport to address all of the safety problems, if any, associated with its use. It is the responsibility of the user of this standard to establish appropriate safety and health practices and determine the applicability of regulatory limitations prior to use.*

[1] This guide is under the jurisdiction of ASTM Committee D-18 on Soil and Rock and is the direct responsibility of Subcommittee D18.21 on Ground Water and Vadose Zone Investigations.

Current edition approved Sept. 15, 1992. Published January 1993.

NOTE 5—If state and local regulations are in effect where the decommissioning is to occur, the regulations take precedence over this guide.

2. Referenced Documents

2.1 *ASTM Standards:*

C 150 Specification for Portland Cement[2]

C 618 Specification for Fly Ash and Raw or Calcined Pozzolan for Use as a Mineral Admixture in Portland Concrete Cement[2]

D 420 Guide for Investigating and Sampling Soil and Rock[3]

D 4380 Test Method for Density of Bentonitic Slurries[3]

D 5088 Practice or the Decontamination of Field Equipment Used at Non-Radioactive Waste Sites[3]

D 5092 Practice for Design and Installation of Ground Water Monitoring Wells in Aquifers[3]

3. Terminology

3.1 *Descriptions of Terms Specific to This Standard:*

3.1.1 **abandonment**—see *decommissioning.*

3.1.2 *attapulgite clay*—a chain-lattice clay mineral. The term also applies to a group of clay minerals that are lightweight, tough, matted, and fibrous.

3.1.3 *borehole television log*—a borehole or well video record produced by lowering a television camera into the borehole or well. This record is useful in visually observing downhole conditions such as collapsed casing or a blocked screen.

3.1.4 *blowout*—a sudden or violent uncontrolled escape of fluids or gas, or both, from a borehole.

3.1.5 *caliper log*—a geophysical borehole log that shows to scale the variations with depth in the mean diameter of a cased or uncased borehole.

3.1.6 *cement, API, Class A*—a cement intended for use from the surface to a depth of 6000 ft (1828 m). This cement is similar to ASTM Type I cement.

3.1.7 *cement, API, Class B*—a cement intended for use from the surface to a depth of 6000 ft (1828 m) when conditions require moderate- to high-sulfate resistance. This cement is similar to ASTM Type II cement.

3.1.8 *cement, API, Class C*—this cement is intended for use from the surface to a depth of 6000 ft (1828 m) when conditions require high early strength. This cement is similar to ASTM Type III cement. Also available as a high sulfate resistant type.

3.1.9 *cement, API, Class G*—this cement is intended for use from the surface to a depth of 8000 ft (2438 m). It can be used with accelerators or retarders to cover a wide range of well depths and temperatures. No additions other than calcium sulfate or water, or both, can be interground or blended with the clinker during manufacture of the cement. Also available as several sulfate-resistant types.

3.1.10 *cement, API, Class H*—this cement is intended for use from the surface to a depth of 8000 ft (2438 m). It can be used with accelerators or retarders to cover a wide range of well depths and temperatures. No additions other than calcium sulfate or water, or both, can be interground or blended with the clinker during manufacture of the cement. Also available as a sulfate-resistant type.

3.1.11 *cement, API, Class J*—this cement is intended for use from depths of 12 000 to 16 000 ft (3658 to 4877 m) under conditions of extremely high temperatures and pressures. It can be used with accelerators and retarders to cover a range of well depths and temperatures. No additions of retarders other than calcium sulfate, or water, or both, can be interground or blended with the clinker during manufacture of the cement.

3.1.12 *cement bond (sonic) log*—a borehole geophysical log that can be used to determine the effectiveness of a cement seal of the annular space of a well.

3.1.13 *channeling*—the process of forming a vertical cavity resulting from a faulty cement job in the annular space.

3.1.14 *curing accelerator*—a material added to cement to decrease the time for curing. Examples are sodium chloride, calcium sulfate (gypsum), and aluminum powder.

3.1.15 *curing retarder*—a material added to cement to increase the time for curing. Sodium chloride in high concentrations is an example.

3.1.16 *decommissioning (closure)*—the engineered closure of a well, borehole, or other subsurface monitoring device sealed with plugging materials. Decommissioning also includes the planning and documenting of all associated activities. A synonym is abandonment.

3.1.17 *decontamination*—the process of removing undesirable physical or chemical constituents, or both, from equipment to reduce the potential for cross-contamination.

3.1.18 *fallback*—shrinkage, settlement, or loss of plugging material placed in a borehole or well.

3.1.19 *fire clay*—a silicious clay rich in hydrous aluminum silicates.

3.1.20 *flow log*—a borehole geophysical log used to record vertical movement of ground water and movement of water into or out of a well or borehole and between formations within a well.

3.1.21 *geophysical borehole log*—a log obtained by lowering an instrument into a borehole and continuously recording a physical property of native or backfill material and contained fluids. Examples include resistivity, induction, caliper, sonic, and natural gamma logs.

3.1.22 *grout*—material consisting of bentonite, cement, or a cement-bentonite mixture.

3.1.23 *grout pipe*—a pipe or tube that is used to transport cement, bentonite, or other plugging materials from the ground surface to a specified depth in a well or borehole. The material may be allowed to flow freely or it may be injected under pressure. The term tremie pipe is frequently used interchangeably.

3.1.24 *hydraulic communication*—the migration of fluids from one zone to another, with reference to this guide; especially along a casing, grout plug, or through backfill materials.

3.1.25 *multiple-screened wells*—two or more monitoring wells situated in the same borehole. These devices can be either individual casing strings and screen set at a specific depth, a well with screens in more than one zone, or can consist of devices with screens with tubing or other collecting devices attached that can collect a discrete sample.

[2] *Annual Book of ASTM Standards*, Vol 04.02.

[3] *Annual Book of ASTM Standards*, Vol 04.08.

269

3.1.26 *native material*—in place geologic (or soil) materials encountered at a site.

3.1.27 *overdrilling*—the process of drilling out a well casing and any material placed in the annular space.

3.1.28 *perforation*—a slot or hole made in well casing to allow for communication of fluids between the well and the annular space.

3.1.29 *permanent plugging*—a seal that has a hydraulic conductivity that is equivalent or less than the hydraulic conductivity of the geologic formation. This term is often used with uncased boreholes.

3.1.30 *plow layer*—the depth typically reached by a plow or other commonly used earth turning device used in agriculture. This depth is commonly one to two feet (.3 m to .61 m) below land surface.

3.1.31 *plugging material*—a material that has a hydraulic conductivity equal to or less than that of the geologic formation(s) to be sealed. Typical materials include portland cement and bentonite.

3.1.32 *pre-conditioning*—an activity conducted prior to placing plugging material into a borehole in order to stabilize the hole.

3.1.33 *temporary decommissioning*—the engineered closure of a well intended to be returned to service at some later date (generally no more than six months). Temporary plugging should not damage the structural integrity of the well. Plugging materials consist of sand, bentonite, or other easily removed materials.

4. Summary of Guide

4.1 Information is provided on the significance of properly decommissioning boreholes and wells at sites containing or formerly containing solid or hazardous waste or hazardous materials or their byproducts, or that may be affected by solid or hazardous waste materials or their byproducts in the future. This guide may be used in situations where water quality in one aquifer may be detrimental to another aquifer either above or below the aquifer. The primary purpose of decommissioning activities is to permanently decommission the borehole or monitoring device so that the natural migration of ground water or soil vapor is not significantly influenced. Decommissioned boreholes and wells should have no adverse influence on the local environment than the original geologic setting.

4.2 It is important to have a good understanding of the geology, hydrogeology, well construction, historic and future land use, chemicals encountered, and the regulatory environment for successful decommissioning to occur.

4.3 Various materials suitable for decommissioning boreholes and wells are discussed, including their positive and negative attributes for decommissioning. A generalized procedure is provided that discusses the process from planning through implementation and documentation. Examples of typical practices are provided in the appendix.

5. Significance and Use

5.1 Decommissioning of boreholes and monitoring wells, and other devices requires that the specific characteristics of each site be considered. The wide variety of geological, biological, and physical conditions, construction practices, and chemical composition of the surrounding soil, rock, waste, and ground water precludes the use of a single decommissioning practice. The procedures discussed in this guide are intended to aid the geologist or engineer in selecting the tasks required to plan, choose materials for, and carry out an effective permanent decommissioning operation. Each individual situation should be evaluated separately and the appropriate technology applied to best meet site conditions. Considerations for selection of appropriate procedures are presented in this guide, but other considerations based on site specific conditions should also be taken into account.

NOTE 6—Ideally, decommissioning should be considered as an integral part of the design of the monitoring well. Planning at this early stage can make the decommissioning activity easier to accomplish. See Practice D 5092 for details on monitoring well construction.

5.2 This guide is intended to provide technical information and is not intended to supplant statutes or regulations. Approval of the appropriate regulatory authorities should be an important consideration during the decommissioning process.

6. Materials

6.1 The materials used for construction of a monitoring well or other monitoring device to be decommissioned in part determines how it is decommissioned. Various materials are available for use in plugging boreholes and monitoring wells. This section provides information on these materials.

6.2 *Casing and Screen Materials:*

6.2.1 Various materials are used for well casing and screen. The most common materials used are: PVC, PTFE, fiberglass, carbon steel, stainless steel, and aluminum. Typically, the same material is used for casing and screen in a well, however, in some instances different materials may be used in a well to achieve a particular purpose such as corrosion protection, reduction of material costs, or improving the integrity of ground water or soil vapor samples. This guide does not specifically address the use of more than one type of casing or screen material used in a well, however, the same decommissioning methods can frequently be used when more than one material is used (for example, PVC and PTFE, or stainless steel and carbon steel) in a well.

6.2.2 In selecting a well decommissioning method, PVC, PTFE, and fiberglass wells can be decommissioned using similar methods as all three types of materials tend to be low in tensile strength and easy to drill out or perforate. Appendix X1 provides a discussion on various procedures that can be used for the decommissioning of PVC wells and by reference PTFE and fiberglass wells.

6.2.3 Wells constructed of carbon steel, stainless steel, and heavy walled aluminum can be decommissioned using similar methods as these materials tend to have a higher tensile strength that allows for the casing to be removed. Appendix X1 provides a discussion on various procedures that can be used for the decommissioning of steel wells and by reference stainless steel and aluminum wells.

6.3 *Plugging Materials:*

6.3.1 Plugging materials should be carefully chosen for well closure to be permanent. Basic material characteristics are listed as follows:

6.3.1.1 Plugging materials should not react with contami-

nants or adversely react with ground water or geologic materials.

6.3.1.2 Plugging materials used in decommissioning wells, borings, etc. should have hydraulic conductivity (saturated condition) that is comparable to or lower than that of the lowest hydraulic conductivity of the geologic material being sealed.

6.3.1.3 Plugging materials must have sufficient structural strength to withstand pressures expected from native conditions.

6.3.1.4 Plugging materials must maintain sealing capabilities and not degrade due to chemical interaction, corrosion, dehydration, or other physical or chemical processes. Materials should maintain their design characteristics for the length of time contamination is present at the site.

6.3.1.5 Plugging materials should not be readily susceptible to cracking or shrinkage, or both.

6.3.1.6 Plugging materials must be capable of being placed at the position in the well or borehole in which they are needed and must have properties that reduce their unintended movement vertically and horizontally.

6.3.1.7 Plugging materials must be capable of forming a tight bond and seal with well casing and the formation.

6.3.18 Plugging materials must have properties that eliminate leaching or erosion of the material, under the conditions the material will be subjected. These include vertical or horizontal movement, or both, or contact with ground water or other existing conditions.

NOTE 7—The grain size of plugging material used in decommissioning operations conducted in areas where thick vadose zones occur should be coarser than materials used in areas where thin vadose zones or shallow saturated conditions occur. This is necessary as water is not transported effectively in coarse-grained materials under negative pore pressures. Coarse-grained materials should not be used where saturated conditions are likely to exist during the period of time that hazardous materials can be expected to occur at the site. It is important to determine the lithology and grain size distribution of materials adjacent to the borehole or well prior to selection of plugging materials.

NOTE 8—If coarse-grained materials are used to decommission the borehole or well, a layer of fine-grained material (such as cement or bentonite, or both) 1 or 2 ft (.3 or .61 m) thick should be placed at 10 ft (3 m) intervals in the borehole in the saturated zone. This layer should extend 2 to 3 ft (.61 to .91 m) above the highest expected level saturation is expected based on historical information on the water table for unconfined aquifers. A similar thickness of these materials should be used for confined aquifers. A similar 5-ft (1.5-m) seal of a low-permeability material should be placed near the ground surface to reduce the potential for entrance of fluids at the ground surface.

6.4 *Commonly Used Materials*—Subsections 6.2 and 6.3 introduced the general criteria that must be evaluated during the process of selecting the appropriate procedure and material for plugging a specific well. Because well construction and local geological conditions are site specific, a wide variety of materials and procedures may be used to complete the closure.

6.4.1 Section 6.4 presents a review of the plugging materials most commonly used to decommission monitoring wells. Table 1 summarizes these materials and lists the most important considerations (positive and negative) for their use. A detailed discussion of each material is presented in the following subsections.

6.4.2 *Portland Cement*—Portland cement may be used in any of its various forms to meet placement, strength, and durability criteria listed in 6.1. The amount of shrinkage or settling of neat cement is dependent on the amount of water used. Higher water to cement ratios tend to increase shrinkage (**1**).[4]

6.5 *Specification C 150:*

6.5.1 *Type I*—Type I cement, a general-purpose material, is the most commonly used cement. This material has a tendency to develop a relatively high heat of hydration when used in confined situations and has relatively low-sulfate resistance.

6.5.2 *Type II*—Somewhat slower strength development than Type I; however, Type II cement has moderate heat of hydration and moderate sulfate resistance.

6.5.3 *Type III*—Type III cement is used when high early strength is desired. This material is not commonly used in decommissioning activities because of its ability to quickly set. Care must be used in working with this material.

6.5.4 *Type IV*—Type IV cement is used where a low heat of hydration is desired. It is not commonly used in decommissioning activities.

6.5.5 *Type V*—Type V cement has high resistance to sulfate, and brine solutions. This material has ultimate strength development somewhat less than either Types I or II.

6.5.6 Type K cement is expansive and can be used to compensate for shrinkage. This cement is essentially Type I or more commonly Type II Portland Cement with additives to produce expansion. It can be of use in plugging situations where water-tightness is important. Type K cement contains calcium sulfoaluminate. When mixed with water, the hydration causes an expansion ranging from approximately 0.05 to 0.20 % (**2**).

6.6 *API Cements* (**3**):

6.6.1 *Class A*—Class A cement corresponds closely to ASTM Type 1. This cement is intended to be used from the surface to a depth of 6000 ft (1828 m).

6.6.2 *Class B*—Class B cement corresponds closely to ASTM Type II. It is intended for use from the surface to a depth of 6000 ft (1828 m) and is also available as a high-sulfate resistant variety.

6.6.3 *Class C*—Class C cement corresponds closely to ASTM Type III. It is intended for use from the surface to a depth of 6000 ft (1828 m). It is also available as a high-sulfate resistant variety.

6.6.4 *Class G*—Class G cement is intended for use from the surface to a depth of 8000 ft (2438 m) and can be used with accelerators or retarders to cover a wide range of depths and temperatures. The cement is also available as a high-sulfate resistant variety.

6.6.5 *Class H*—Class H cement is intended for use from the surface to a depth of 8000 ft (2438 m). It can be used with a wide variety of accelerators and retarders to cover a wide range of depths and temperatures. It is available only as a moderate-sulfate resistant type.

6.6.6 *Class J*—This cement is intended for use from a depth of 12 000 to 16 000 ft (3658 to 4877 m) wh

[4] The boldface numbers in parentheses refer to a list of references at the end of the text.

271

TABLE 1 Properties of Common Plugging Materials

Plugging Material	Description	Positive Attributes	Negative Attributes
TM C-50 Portland Cement			
ype I	Most commonly used type of cement for plugging	Forms a good seal when used with bentonite in 3 to 5 % concentration. Commonly available and can be purchased premixed on-site.	High heats of hydration may be a problem in PVC-cased wells. Can shrink and crack; low-sulfate resistance. Should not be used in the presence of strong acids or in low-pH environments.
Type II	Similar to Type I, but with a moderate heat of hydration.	Moderate heat of hydration. Moderate resistance to sulfate.	Somewhat slower strength development than Type I; expensive. Can shrink and crack. Can be difficult to use. Should not be used in the presence of strong acids or in low-pH environments.
Type III	High early strength.	May prove useful in situations where high early strength is needed, such as borehole walls that have a tendency to collapse.	Not a common cement. Can set very quickly before decommissioning is completed. Should not be used in the presence of strong acids or in low-pH environments.
Type IV	Low heat of hydration.	May prove useful in situations where a low heat of hydration is required	Not a common cement. Should not be used in the presence of strong acids or in low-pH environments.
Type V	Similar to Type I, with high resistance to sulfate and brine.	High resistance to sulfate and brine. Low heat of hydration.	Ultimate strength is less than Types I and III. Expensive; should not be used in the presence of strong acids or in low-pH environments. Can be difficult to use. Can shrink or crack.
K	Expansive cement.	Basically Type I or Type II Portland Cement with additions (tricalcium sulfo aluminate for example) to provide for expansion. Expansion is generally in the range from 0.05 to 0.20 %. Good resistance to sulfate attack.	
API 10			
Class A	Similar to ASTM Type I.	Can be used to a depth of 6000 ft (1828 m). Forms a good seal when used with bentonite in 3 to 5 % concentration. Commonly available and can be purchased premixed on-site.	High heats of hydration may be a problem in PVC-cased wells. Can shrink and crack; low-sulfate resistance. Should not be used in the presence of strong acids or in low-pH environments.
Class B	Similar to ASTM Type II.	Can be used to depth of 6000 ft (1828 m). Moderate heat of hydration. Moderate resistance to sulfate. Available as a high-sulfate resistant variety.	Somewhat slower strength development than Type I; expensive. Can shrink and crack. Can be difficult to use. Should not be used in the presence of strong acids or in low-pH environments.
Class C	Similar to ASTM Type III.	Can be used to a depth of 6000 ft (1828 m).	Can set very quickly before decommissioning is completed. Should not be used in the presence of strong acids or in low-pH environments. Can shrink and crack.
G	Useful in a wide range of temperatures and depths through the use of accelerators or retarders.	Can be used to a depth of 8000 ft (2438 m). Available as a sulfate-resistant variety.	Should not be used in the presence of strong acids or in low-pH environments. Can shrink and crack.
Class H	Useful in a wide range of depths and temperatures through the use of accelerators or retarders.	Can be used to a depth of 8000 ft (2438 m). Available only as a moderate sulfate type.	Should not be used in the presence of strong acids or in low-pH environments. Can shrink and crack.
Class J	Intended for use from a depth 12 000 to 16 000 ft (3658 to 4877 m).	Has use where extremely high temperatures and pressures occur.	Should not be used in the presence of strong acids or in low-pH environments. Can shrink and crack.
Pozzolanic cement	Addition of silicious materials to ASTM Type V or API Class A cement.	Good resistance to corrosive conditions and in reducing the permeability of cement.	Many types of materials can be used that can result in variable results.
Epoxy cements	Vinyl ester resins.	Good chemical resistance to acids and bases. Can use available equipment to place cement.	Very experisive. Poor chemical resistance to chlorinated hydrocarbons and acetic aid. Should be used only by experienced personnel. Water accelerates curing, must use diesel oil to precondition hole (diesel may increase contamination of site if hydrocarbons are a concern).
Bentonite			
Pellets	Granular bentonite compressed into a tablet	Uniform in size. Easy to use. Produces a low permeability seal.	Must be hydrated after placement. Shrinkage may occur when desiccated or when in contact with high concentrations of organic compounds (greater than 2 %) or materials that are strongly acidic or alkaline. Expensive.
Chips	Raw mined montmorillonite in the form of chunks ¼ to ¾ in. (.64 to 1.91 m) in size.	Inexpensive. No mixing equipment required. Forms a low-permeability seal.	Difficult to place. Must be hydrated after placement. Less swelling than beneficiated bentonite. Shrinkage may occur when desiccated when in contact with high concentrations of organic compounds (greater than 2 %) or materials that are strongly acidic or alkaline.
Granular	Raw mined montmorillonite crushed and seared to an 8 to 20-mesh size.	Can be placed at depth in dry holes. Forms a low- permeability seal.	Difficult to place in holes containing water as it quickly hydrates. Can bridge in hole. May desiccate when in contact with high concentrations of organic compounds (greater than 2 %) or materials that are strongly acidic or alkaline causing shrinkage.

TABLE 1 *Continued*

Plugging Material	Description	Positive Attributes	Negative Attributes
Powdered	Pulverized and seared bentonite that passes a 200- mesh screen. Used as drilling mud or as an additive to cement.	Used with cement to compensate for shrinkage (under saturated conditions). Other additives can be used to inhibit swelling, etc. Retards cement set: lowers heat of hydration.	May not be a desirable plugging material in deep vadose zones due to the drying out of the material, resulting in cracking. Difficult to place in holes containing water, as it quickly hydrates. Can bridge in hole. May desiccate when in contact with high concentrations of organic compounds (greater than 2 %) or materials that are strongly acidic or alkaline causing shrinkage.
High solids clay grout	Powdered bentonite (200 mesh) mixed with fresh water to form a slurry with a minimum of 20 % solids and a density of 9.4 lb/gal (1126 Kg/m³ g/L).	Does not shrink during curing. Low density reduces formation losses. Forms a low-permeability seal that stays flexible as long as it is hydrated.	May not be a desirable plugging material in deep vadose zones due to the drying out of the material, resulting in cracking. May desiccate when in contact with high concentrations of organic compounds (greater than 2 %) or materials that are strongly acidic or alkaline causing shrinkage. A low-strength material subject to expansion under low-pressure differentials such as artesian conditions.

extremely high temperatures and pressures can be expected to occur.

6.6.7 *Other Cements*—Other cements have been developed that may have applicability in decommissioning activities. These include the following:

6.6.7.1 Ultralight cements with a slurry density that can be as low as 6 lb/gal (719 cm Kg/L). This material can be made by foaming the cement with nitrogen or through the addition of hollow glass microspheres between 60 and 315 µm in diameter. The latter forms a slurry of between 9 and 12 lb/gal (1078 and 1438 Kg/L). Ultralight cements and microspheres have been reported **(4)** for cement unconsolidated sands and for plugging cavernous formations and lost circulation zones. Reference **(5)** provided similar information on microspheres. Microspheres can also be used in high-pressure applications when it may be desirable to limit density increases. Another advantage is the low water/cement ratio due to the low water absorbency and low density **(5)**.

6.6.7.2 *Pozzolanic-Portland Cements*—These cements consist of silicious materials that develop into a cement in the presence of lime and water. Both natural materials of volcanic origin such as perlites (volcanic ashes), heat-treated clays, shales, tuffs, opaline cherts, diatomaceous earth and artificial materials consisting of byproducts from glass factories, furnace slag, and fly ash have been used **(2, 4, 6)**. The large variety of materials that can be used as a source for pozzolans may result in variable results.

6.6.7.3 Pozzolans act to extend cement and decrease density. The specific gravity of fly ash ranges from 2.3 to 2.7 (depending upon the source) while portland cement is 3.1 to 3.2 **(2)**. These materials can also provide improved resistance to corrosive fluids. Table 2 provides a comparison of sulfate resistance between ASTM Type V cement with and without pozzolans.

6.6.7.4 The improved resistance to corrosive materials is accomplished in part as many pozzolans contain zeolites which have the ability for ion exchange between the corrosive material and the alkaline component in the cement **(7)**. Secondly, the use of pozzolans also decreases cement permeability over time. This occurs as a result of the increased percentage in hydrated cement containing materials resulting from the release of calcium hydroxide and the silica combining with lime from the cement to form a stable material **(8)**.

6.6.7.5 Pozzolans are added to portland cement by adding 74 lb (33.6 Kg) (as fly ash) per sack of cement. If perlites are used, 2 to 6 % of bentonite by weight is needed to keep the perlite from floating **(9)**.

6.6.8 Gypsum cements can be used for high early strength development and their ability to set rapidly. These cements expand approximately 0.3 %. This cement may have use in plugging highly permeable formations. Care should be taken in using gypsum cements due to the solubility of gypsum.

6.6.9 *Epoxy Resin Cements*—Epoxy (vinyl ester resins) cements may have applicability in decommissioning wells and boreholes where corrosive materials may be present **(5)**.

6.6.9.1 Epoxy cement consists of an epoxy base, hardener, accelerator, and inert filler. Resin viscosity is reduced by the addition of a nonreactive liquid diluent that also controls exothermic heat during polymerization. An inert solid filler such as very fine silica or barite is added to further reduce reaction heat and increase strength **(10)**.

6.6.9.2 There are several advantages of using epoxy cements. Reference **(11)** reports that a stronger bond occurred between the casing and the formation. Cole also reported resistance to various chemicals (see Table 3). The cement is highly resistant to high concentrations of hydrochloric and sulfuric acid, but is not suitable for use in environments where acetic acid, chlorinated hydrocarbons, or toluene are present.

TABLE 2 Comparison of ASTM Type V Cement With and Without Pozzolan Materials[A]

Cement Type	Relative Degree of Sulfate Attack	Percentage of Water Soluble Sulfate (as SO_4) in Soil, ppm	Sulfate (as SO_4) in Water Samples, ppm
V	Severe	0.20 to 2.00	1 500 to 10 000
V (plus pozzolan)	Very severe	2.00 or more	10 000 or more

[A] See Ref (4).

TABLE 3 List of Chemicals Reported Not to Affect Epoxy Cement[A]

Chemical	Concentration, %
Hydrochloric acid	30
Sulfuric acid	25
Chromic acid	up to 10
Nitric acid	5
Hydroxide	up to 20
Hypochlorite	up to 6

[A] See Ref (11).

273

6.6.9.3 This cement is expensive and requires removal of water (that reduces settling time) through the use of gelled and weighted diesel oil to precondition the hole. The use of this material may increase contamination at the site, if diesel oil (hydrocarbons) are a concern at the site.

6.6.10 *Cement Additives*—A number of materials can be added to cement to modify properties to meet a specific need. Cement additives can be used to extend, accelerate, retard, increase density, control fluid losses, control circulation losses, or reduce friction (**4**). Several of these materials have more than one use; for example, sodium chloride can be used to accelerate or retard cement. The most common cement additives are discussed in the following subsections. Figure 1 lists these additives and presents the relative impact of their use on selected performance criteria.

6.7 *Extenders:*

6.7.1 Bentonite is the most commonly used material in modifying cement properties. It can be added to most ASTM and API cements. In decommissioning activities, the percentage of bentonite added is generally no more than 4 %. It has the following effects when added to cement (**4**):

6.7.1.1 Lowers the hydraulic conductivity of the cement;

6.7.1.2 Increases slurry viscosity;

6.7.1.3 Reduces fluid loss to the formation;

6.7.1.4 Provides for a longer pumpability at normal pressures as a result of delaying strength development;

6.7.1.5 Reduces compressive strength; and

6.7.1.6 Lowers resistance to chemical attack.

6.7.2 Bentonite increases shrinkage as it ties up large volumes of water that would normally be in the cement. A second common extender are pozzolans which have already been addressed in 6.6.7.2.

6.8 *Accelerators:*

6.8.1 Accelerators hasten the settling of cement and are useful when voids occur, or when cement plugs are to be used in the first pour. Two common materials are used; calcium chloride and sodium chloride.

6.8.2 Calcium chloride is available as a powder or flake. Flakes are the most commonly used form, as it is easy to store and can absorb some moisture without becoming lumpy (**2**). Two to four % of calcium chloride by weight is used to achieve maximum acceleration. The use of calcium chloride should be considered when a rapid set, a decrease in viscosity, and early strength are desired.

6.8.3 Sodium chloride can be added between 1.5 to 5 % by weight of cement to reduce setting time. Maximum acceleration occurs at a concentration of 2 to 2.5 % except when higher water ratios are used (**2**).

6.9 *Retarders:*

6.9.1 Sodium chloride can be used to retard the settling of cement as well as accelerate the setting of cement. Fifteen to seventeen % salt (14 to 16 lb (6.35 to 7.26 Kg) of salt per sack) by weight is added to retard cement (**2**).

6.9.2 Other chemicals (cellulose, lignosulfates) have been used as retarders, but are not appropriate for decommissioning activities without additional information on their compatibility with waste and their effect on water quality. Reference (**12**) indicates that sugar-derived retarders such as cellulose lignosulfates are destructive to cement strength and should not be used where strength is important. Organic

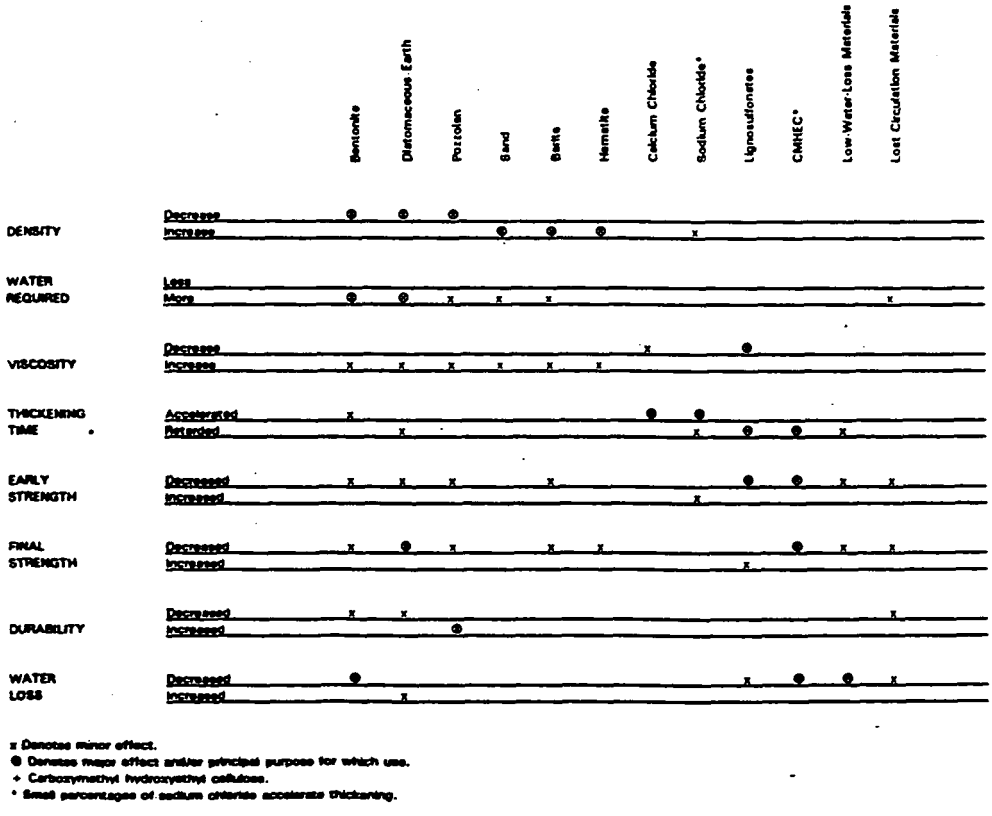

x Denotes minor effect.
● Denotes major effect and/or principal purpose for which use.
+ Carboxymethyl hydroxyethyl cellulose.
* Small percentages of sodium chloride accelerate thickening.

NOTE—See Ref (**3**).

FIG. 1 Effects of Some Additives on the Physical Properties of Cement

retarders should not be used for decommissioning activities.

6.10 *Density Improvers*—The density of cement can be improved to increase hydrostatic pressure. Sand can be used to increase density without affecting the cement chemically although additional water is required. Barite has been used, but may interact with waste and should not be used.

6.11 *Fluid Loss Controllers:*

6.11.1 Various organic materials such as cellulose can be used to produce a constant water to solids ratio that may have applicability when a grout is placed under pressure and water loss can occur. However, these materials may not be suitable for decommissioning activities, as they may contribute to contamination.

6.11.2 These organic materials (fibrous materials, cellophane flakes) act to block the movement of the grout into the formation. It is not desirable to use these materials in decommissioning activities due to their organic content that may adversely affect water quality and also may not result in a good plug.

6.12 *Friction Reducers (Dispersants):*

6.12.1 These materials reduce friction to improve flow and can be effective when the water cement ratio is reduced. Reduction of the water cement ratio is a method to decrease cement friction. (It is possible to reduce the amount of water added by using a dispersant (5). These materials (sodium chloride, polymers, and calcium lignosulfonate) also help to reduce the energy required to pump the grout. Polymers and calcium lignosulfonate may not be appropriate materials for decommissioning activity as they may affect water quality.

6.13 *Bentonite*—Bentonite is predominantly composed of the clay mineral sodium montmorillonite. It has the ability to absorb large quantities of water and swell to many times its original size when hydrated, and the material remains flexible. Bentonite clay may be used in any of its various forms to meet placement, strength, and sealing criteria listed in 6.3. The amount of shrinkage or settling of a bentonite seal is dependent on the percent solids of bentonite, composition of surrounding formation and its soil moisture. Higher water to bentonite ratios increase the likelihood of dehydration.

6.13.1 The permeability of bentonite is very low; hydraulic conductivities of 1×10^{-6} cm/s or less can be achieved. However, bentonite may desiccate in the presence of high concentrations of some organic chemicals, strong acids or bases, saline ground water, or when allowed to dry, thereby increasing its hydraulic conductivity. Bentonite is commercially available in the following forms:

6.13.1.1 *Pellets*—Pellets are made from granular powdered bentonite that has been compressed into tablets, commonly ¼ to ¾ in. (.64 cm to 1.91 cm) in diameter. Pellets have a low-moisture content, high density, and uniform size. Pellets should be composed of additive-free, high-swelling granular sodium bentonite. Properly placed in a well or borehole, pellets hydrate and expand creating a low permeability (1×10^{-6} cm/s) plug. Pellets can be used in the saturated zone provided the length of the water column is short. The rate of pour into the hole should not be more than 50 lb (22.7 Kg) of bentonite in 5 min (1).

6.13.1.2 *Preformed Donuts*—Commercial preformed donuts consist of compressed bentonite and may have use in decommissioning activities.

6.13.2 *Chips*—Raw mined sodium montmorillonite in the form of chunks that are ¼ to ¾ in. (6.4 to 1.91 cm) in diameter. Their angular shape can make it difficult to pla chips to the desired depth in a small-diameter well borehole without bridging.

6.13.2.1 Fine-grained material resulting from the mechanical breakdown during shipping may cause a problem in the placement of chips due to clumping. Fines should be screened through a ¼-in. (6.4-mm) mesh screen before use.

6.13.2.2 The lower affinity for water that chips have allow them to fall through a water column without rapid hydration.

6.13.2.3 Chips have applicability in large-diameter boreholes and when carefully dropped into the hole to reduce bridging.

6.13.3 *Granular*—Raw-mined sodium montmorillonite without any additives that has been crushed and seared to an 8 to 20-mesh size. This material can be placed at depth in dry holes but hydrates quickly when placed into water. It often sticks to wet borehole walls and bridges when placed through water. Granular material is best suited for use in the unsaturated zone with enough water added to provide adequate hydration.

6.13.3.1 Fines can clump when in contact with water (1). Fines result from mechanical breakdown of the material during shipping. Granular bentonite should be poured slowly to reduce the potential for bridging. In some situations, a pour rate not exceeding 50 lb (227 Kg) in 5 min has been used successfully (1).

6.13.4 *Powdered*—Untreated, seared, and groun bentonite that passes through a 200-mesh screen. It designed to be used in drilling fluids (muds) and as additive to other plugging materials such as cement. Bentonite powder slurry can become an effective grout material when combined with density-increasing additives and swelling inhibitors. Powdered bentonite should not be placed in dry form through water as it can bridge and stick to the borehole walls.

6.13.5 *High Solids Clay Grout*—This material is a blend of powdered polymer-free bentonite clays mixed with fresh water that forms a slurry with a minimum 20 % solids by weight and a density of 9.4 lb/gal (1126m^3 Kg/L). The slurry sets to a low-permeable plastic grout that generates no heat of hydration and does not shrink during curing in the presence of moisture. High solids clay grouts are commonly used for borehole plugging.

6.14 *Other Materials:*

6.14.1 A number of other materials have been used for plugging:

6.14.1.1 Attapulgite clay (may have applicability when used with a salt cement grout)[5]

6.14.1.2 Fire clay

6.14.1.3 Commercial packing materials

6.14.1.4 Packers

6.14.2 These materials are either inappropriate for use in decommissioning wells or boreholes where hazardous waste are encountered, or are not well studied for decommissioning wells in hazardous waste situations. Therefore, th

[5] Sutton, Fred. Personal Communication, 1990.

275

not discussed in this guide.

.14.3 Other materials have been used in the past for ugging wells and boreholes. Such materials as wooden or lead plugs should not be used because wood plugs may decay and lead is a potentially hazardous material. Mechanical packers composed of steel, plastic, or other materials can be used to assist in plugging.

7. Procedure

7.1 The primary purpose of most boreholes and monitoring wells is to monitor chemical compounds in the soil and ground water; however, there are other uses for subsurface monitoring including the measurement of temperature, soil gas sampling, or measurement of geophysical parameters. Use significant care in planning and implementing the decommissioning activity. It is important to obtain any required approvals from regulatory agencies, land owners, responsible parties, and other parties involved with the site. The following subsections present a recommended list of tasks in order that the decommissioning activity is successfully completed. Several of the steps outlined below do not pertain to boreholes and may be omitted.

7.2 *Planning:*

7.2.1 *Records Review*—Carefully review all available records and information relating to use of the monitoring well, borehole, etc. This review may include the following information:

2.1.1 Review applicable Federal, state, and local regula- s relating to decommissioning activities. This may in- de contacting the applicable state or local agency having jurisdiction over drilling activities and preparation of the necessary documentation to drill (start card),

7.2.1.2 Collection of drillers' logs, geophysical logs, well construction, or geologic logs, including stratigraphy, structural geology, subsurface information, construction materials, screened interval, depth, hydraulic gradients (if water levels are available from other wells for its determination), legal location, date of installation, and photographs of the well,

7.2.1.3 Review of analytical chemical data for soil and ground water over the life of the well, and variations in water levels over time,

7.2.1.4 Review of records of the repairs, modifications, or other changes made to the well during the lifetime of the well,

7.2.1.5 Evaluation of historic, current, and planned land use,

7.2.1.6 Interviews with local workers and collection of other pertinent data such as discussing site conditions with local drillers, and

7.2.1.7 While not directly part of the decommissioning activity, proper disposal of displaced fluids and other materials (such as pulled or drilled out casing and cement seals) should be considered. Some of these materials may be classified as a hazardous waste under Federal, state, or local lations. Conduct a review of these regulations and priate analytical documentation prior to classifying a erial as a hazardous waste.

NOTE 9—This information may be summarized in a work plan. A work plan would also include a description of the site geology and hydrogeology and the decommissioning method to be used.

7.2.2 *Verification of Field Data*—The variety and quality of field practices and reporting require that the well be inspected to verify the actual field situation prior to decommissioning the well. The following list of procedures is recommended so that the actual condition of the well is known. Some of the borehole geophysical logs may not be applicable or may not be available for small diameter (2 in. (5.08 cm) or less) holes or wells.

7.2.2.1 Inspection of well head installation for integrity,

7.2.2.2 Current depth measurement of the casing and well. (The original depth of the borehole may be different than the well.),

7.2.2.3 *Water Quality Sampling and Analysis*—A final water quality sample taken from the well may be required for regulatory purposes;

7.2.2.4 *Downhole Inspections*—Including caliper logs to measure inside diameter; television logs to determine in-well conditions such as casing breaks, screen size, etc.; gamma logs to verify geologic information, if not already available; cement bond logs (sonic) to determine if the casing is firmly attached to grout (presently available for holes 2½ in. (6.35 cm) or larger in diameter); flow logs (flow meter or spinners) to determine if vertical flow occurs within the casing; and hydraulic integrity test to determine if the well casing is intact.

NOTE 10—Care should be taken in running any of these tools in a well with a collapsed or broken casing, or in boreholes that may collapse on the tool. Tools with active radioactive sources should not be used under these circumstances. Conduct downhole inspections only after obstructions are removed from the well casing or borehole.

7.2.2.5 Contact local owner, resident operator/observer to verify operations at the site.

7.2.2.6 Verification of field data is an ongoing responsibility. Use verified information to modify plans in order that the decommissioning activity is correctly conducted. Continue this activity during the field phase and change specifications as needed.

7.2.3 *Review of Decommissioning Options*—After the records have been thoroughly reviewed and verified in the field, select an appropriate decommissioning procedure. Evaluate each possible option to determine the most appropriate method for the selection. The following list of evaluation criteria is recommended:

7.2.3.1 The potential for fluid movement from one aquifer into another by means of the borehole or well should be eliminated.

7.2.3.2 Materials to be used in plugging must be compatible with well casing and screen (if left in place), and with subsurface formation and ground water, etc. over the period of time hazardous materials are found at these sites.

7.2.3.3 Future land use (as is known at the time of decommissioning) should be compatible with decommissioning plans.

7.2.3.4 Closure options should be compatible with applicable federal, state, and local requirements.

7.3 *Implementation:*

7.3.1 *Field Procedure:*

7.3.1.1 Satisfactory completion of decommissioning is the primary purpose of this guide. All work performed on the borehole or well should be completed by competently trained drillers, equipped with appropriate tools, under the

direction of a geological or engineering professional who is qualified to certify that the decommissioning is completed according to the planned procedures and is consistent with applicable regulations.

7.3.1.2 Approve any modifications to the proposed work plan and record in writing by the on-site geologist or engineer (or their representatives) prior to implementation.

7.3.1.3 The geologist or engineer should be on-site during the field activities to verify that the activities are completed as planned. Decommissioning operations can be successfully accomplished by careful planning and documentation (see 7.5). Maintain documentation of decommissioning activities for the post-closure period or period required by regulations (if specified). While regulations may require documentation for a period of 30 years, it is advisable to continue this activity for a period lasting as long as hazardous materials occur at the site.

7.3.1.4 Remove casing from the ground by either pulling or overdrilling (see 7.3.7). Depending upon construction, it may be necessary to leave the casing in place and produce suitable perforations in the screen and blank casing to allow for the plugging material to penetrate the annular space and formation (see 7.3.7). If grout in the annular space can be verified to be in good condition, the well can be decommissioned by cutting the blank casing and filling the screened interval with grout. Verifying the integrity of grout may be difficult to impossible. If a filter pack is present, it may be necessary to remove the filter pack after perforating the casing by washing or overdrilling. Several of the methods identified in this subsection are briefly discussed in the Appendix X1.

7.3.1.5 If well construction conditions are not adequately known and the well site contains hazardous materials, it may not be appropriate to remove the casing and screen, as this may increase the mobility of hazardous materials.

7.3.1.6 The borehole or well, or both, may require preconditioning for decommissioning to be successful. Preconditioning can reduce the potential for sloughing of the borehole wall if for example, a sodium montmorillonite clay occurs naturally in the formation and cement is used as the plugging material. The calcium contained in Portland cement exchanges with the sodium cation in bentonite clay decreasing the water contained in the clay and inducing sloughing. This problem can be significant in sediments or rocks that are under considerable pressure, causing a loss in part of the hole, thereby not completely plugging the borehole and possibly causing loss of all downhole equipment. These conditions are usually known by local drilling and well servicing contractors who should be contacted prior to the start of field operations.

7.3.1.7 Preconditioning consists of removing mud from borehole walls (when mud is used for drilling the borehole), or stabilizing a borehole prior to placement of the plugging material. If a drilling mud has been used to drill a borehole, preconditioning can involve the circulation of a high-quality, low-solids drilling fluid to remove gelled mud from the borehole and borehole walls prior to plugging. For the above situation, a high-quality bentonite or drilling fluid can be used. If a drilling mud is used as the plugging material, prepare fresh mud. The mud used in drilling contains cuttings and may also not have suitable properties (13). The selection and use of material(s) should meet the requirements specified in Section 6.

7.3.2 *Volume of Plugging Material Required:*

7.3.2.1 The geologist or engineer should calculate the volume of plugging material required for the borehole or well after first taking into consideration applicable loss of material to the formation, voids intersecting the borehole, changes in borehole diameter, washout zones, and swelling or shrinkage of material. An approximation of the volume of material that may be required can frequently be provided by contacting local drillers or professionals.

7.3.2.2 Loss of plugging material into the formation may occur rapidly (within minutes) or after several hours or days. The volume of plugging material required to be on-site should be at a minimum, enough to fill one borehole volume, however, it is advisable to have available a minimum of 25 to 50 % in excess of the calculated borehole volume (1, 2). Additional plugging material should be readily available to site personnel under short notice, especially if it is common to lose plugging material into the formation or the material is required for clearing a hole (see 7.3.8.2).

7.3.2.3 A caliper log is helpful in boreholes or overdrilled holes to define hole diameter. If this information is not available, use an estimate of borehole diameter from the available well construction specifications. Calculate the volume of the borehole using the following:

$$v = \pi r^2 L$$

where:

v = volume,
L = length of borehole or well to be plugged, and
r = radius of hole.

7.3.2.4 Manuals listing the volume of a hole per linear foot (metre) such as Ref (3) can also be used. These manuals are available through major deep well cementing service companies. Assume in the calculations or table used that the derived volume is the minimum required for actual conditions due to possible loss of plugging material into the formation. Verify grout emplaced through estimating the volume of material leaving the hole for holes filled with mud or water. For all boreholes, measure the volume of material emplaced and check for the appearance of the material at the top of the interval grouted or land's surface, whichever is applicable.

7.3.2.5 Location of the grout at depth can be difficult because the top of the grout may not be able to be distinguished from water or other fluids in the borehole. One field procedure that has been applied to measure the level of the grout is to use a wooden sounding block with a weight attached to the block. The weight should be slightly denser than the grout.

NOTE 11—Location of the depth of plugging material in a borehole or well does not confirm that the plug has performed its intended purpose. Plugging materials may not have adhered to the walls of the borehole or well or may have been bypassed from the target zone. Therefore, placement of plugging materials is highly dependent upon proper preparation of the hole.

7.3.2.6 In areas where coarse materials are encountered, or considerable fracturing or solution openings occur, two or three times the calculated volume of material may be required to fill the hole. In extreme cases such as in some karst terrains where large conduits may exist, it may be

271

difficult to plug a well or borehole. In these situations, packers can be used to isolate critical intervals for filling with plugged materials above or below the karstic formations. Packers may also be used to isolate critical intervals within a well or borehole throughout the entire depth.

7.3.3 *Quality of Water Used for Grout*—Grout must be carefully mixed using water of a known chemical quality. The quality of the water must be compatible with the grouting material and not introduce contamination into the subsurface. For cement, water used should be free of silt, organic matter, alkali compounds, and have a total solids content of 500 mg/L or less (**14**). The grout should be weighed using a mud balance.

NOTE 12—Thicker grout mixtures may have greater effectiveness in plugging highly permeable materials or materials with large voids, but may be very difficult to pump through a grout pipe. Less viscous mixtures are easy to pump, but may be too mobile, have greater shrinkage, and take longer to set if additives to compensate these problems are not added.

7.3.4 *Mixing of Cement and Bentonite On-Site*—Both cement and bentonite can be mixed on site. Cement can also be purchased from a contractor and delivered premixed on site, provided the water used is of known and acceptable quality.

7.3.5 *Use of Curing Accelerators*—Curing accelerators can be used to hasten the initial set time for cement from 6 to 8 h to perhaps 2 or 3 h, provided the accelerator (typically calcium chloride, sodium chloride, aluminum powder, or gypsum) does not degrade the cement or react with the environment. The use of these materials may also require approval by regulatory authorities.

7.3.6 *Decommissioning of Boreholes:*

7.3.6.1 To achieve an effective seal, the borehole should be free of debris and foreign matter that may restrict the adhesion of the plugging materials to the borehole wall. Clear boreholes of excessive mud filtercake, or gelled mud (if used) and any bridges resulting from the removal of temporary casing, or when noncohesive materials (such as sand and gravel) are encountered that can lead to a collapsed borehole during decommissioning activities.

7.3.6.2 One method commonly used for effective removal of these materials is to advance a small grout pipe to the bottom of the borehole by use of water or a high-quality bentonite slurry and flush the hole. Flushing is continued until the blockage is removed, or noncohesive formations are stabilized. Use at least two borehole volume of materials. If the flushing fluid returning to the surface contains potentially hazardous materials, it may be necessary to place this material into containers for proper disposal.

7.3.6.3 As soon as the borehole is prepared, pump plugging material slowly through a grout pipe to displace the flushing fluid. Inject grout starting from the bottom of the hole, forcing other fluids upward. Complete grouting slowly to prevent channeling of the grout around any undesirable material remaining in the hole. Complete this operation in a continuous operation. Raise the grout pipe when pumping pressure increases significantly, or when undiluted grout reaches the surface. Regularly sample and evaluate overflowing grout for weight, presence of foreign material, or other changes. When the overflowing grout is similar to that being pumped down the hole, the plugging is considered complete.

7.3.6.4 Grout pipes should be the largest diameter that is practical for field operations to reduce the required pumping pressure. Cut the lower end of the pipe at an angle to allow for the side discharge of the grout. Side discharge reduces the potential for erosion of the borehole wall. Typically, heavy-walled PVC (Schedule 40 or greater) or thin-walled steel pipe is used for grouting purposes. Use caution while grouting deeper holes in order that downhole pressure does not exceed the rupture strength of the grout pipe.

7.3.6.5 Grouting of shallow auger holes or other boreholes where grout pumping equipment is not readily available may be accomplished by placing grout through a side discharge grout pipe that has a funnel attached to the top. As the grouting progresses, slowly raise the pipe. Take care when using this procedure, as the low placement pressure may not completely fill or flush undesirable materials from the borehole. This procedure is only recommended when the entire borehole depth is 10 to 15 ft (3 to 4.6 m) or less.

7.3.6.6 Small diameter (<2-in. (5.08 cm-mm)) holes are difficult to plug. A small diameter (¾-in. (1.9 cm-mm)) grout pipe can be used, however, high-pumping pressures may be required or less viscous plugging materials may be necessary.

NOTE 13—It is important to avoid hydrofracturing or blowout in shallow holes in unconsolidated materials when pressure grouting. A general rule to avoid hydrofracturing is to restrict pumping pressure to about 0.6 lb/in.^{2} (0.42 Kg/cm^2) of hydraulic pressure for each foot (metre) of overburden. In some instances, the pressure used must be reduced further.

7.3.6.7 A conservative method (**15**) of calculating maximum pressure is as follows:

$$Pm = (0.733 - 0.433\ Sg)d$$

where:

Pm = pressure of fluid injected at wellhead, lb/in.^{2} (Kg/cm^2),

Sg = density (specific gravity) of the plugging material (grout) (unitless), and

d = depth measured for the surface to the opening of the grout pipe (metres) feet.

Hydrofracturing typically occurs during start-up or restart of grouting.

7.3.6.8 Inject grout at the bottom of the hole, displacing grout, loose formation materials, and borehole fluids upward. Slowly pump grout to avoid channeling. Do this in one continuous operation. Raise the grout pipe when grout can no longer be easily forced from the pipe into the hole or when undiluted grout reaches the top of the hole and flows out. Sample and weigh this material. The weight of the grout returning to the surface should be the same as the grout pumped into the hole.

7.3.7 *Control of Elevated Formation Pressures*—Occasionally, a borehole or well may penetrate a formation that is under confined conditions (artesian head), or from which a gas is being released, under pressure. (Gas bubbling upward through the grout may result in open channels, or increase the permeability of the grout.) When this condition is encountered, sealing of the borehole requires that the grout pressure be maintained greater than the formation pressure until initial grout set occurs. The "shut-in-pressure" of the

formation can usually be determined by use of pressure gages attached to a casing that has been pushed or driven into the confining unit. This casing must be tightly sealed to prevent leakage around its annulus. (Separate packers or casing grout, or both, may be required to prevent leakage around the casing.)

7.3.7.1 Several procedures may be used to balance the formation pressure until the initial set of the grout has occurred. (See Fig. 2.) The procedure most often used to contain the pressure is to use a sufficient column of grout. If additional head pressure is required, increase the unit weight of the grout by the addition of sand, densifying additives (barite, or hematite) or decreasing the water cement ratio. Another alternative commonly used is to pump the grout through a check valve into the casing until the top of grout reaches the desired elevation. Maintain pressure above the grout by use of compressed air, or by use of a simple standpipe filled with water. If the standpipe procedure is used, pump grout through a tremie pipe extending through the water to prevent dilution.

7.3.7.2 After the initial grout set has occurred (minimum 24 h), the sustaining pressure (above atmospheric pressure) may be released. However, record the air pressure (or fluid level) in the air filled casing above the grout frequently for several days to verify that no leakage is occurring. If gas (of any variety) is present in the formation, analyze a sample of the air from the casing above the grout. Care should be taken under these conditions, as explosive or hazardous conditions may be present. Methane, the most commonly produced gas, is odorless, colorless, toxic, and extremely flammable. Safety precautions are advised.

7.3.7.3 Only after testing results confirm that the seal is effective, is it advisable to complete the permanent closure or removal of the near (or above) surface casing.

7.3.7.4 Measure any fallback or settlement of the grout surface (whether by gravity or under pressure) that occurs after grout emplacement to the nearest foot and record. Correct any fallback with native or imported materials to grade, or to a specified depth below grade, such as below the plow layer. The depth is based on existing and proposed land use and regulatory requirements.

7.3.8 *Decommissioning of Wells and Other Monitoring Devices:*

7.3.8.1 This discussion has applicability in decommissioning ground water monitoring and injection wells and soil gas monitoring wells, neutron probe access tubes, lysimeter and tensiometer and installations, and similar devices. Appendix X1 should be consulted for additional information.

7.3.8.2 It is desirable to remove all existing well construction materials such as screen, casing, filter pack, seal, and grout from the hole to reduce the potential for the formation of a vertical conduit to occur at the contact between casing and annular seal; reduce the potential of these materials interfering with the decommissioning operation; decrease the potential of a reaction between the materials used; or to minimize the reaction with the native materials or ground water. In situations where well materials are removed and borehole collapse occurs, redrill the borehole following the guidance provided in 7.3.6.

7.3.8.3 Steel casing may be removed using jacks to free casing from the hole followed by lifting the casing out by using a drill rig, backhoe, cranes, etc. of sufficient capacity

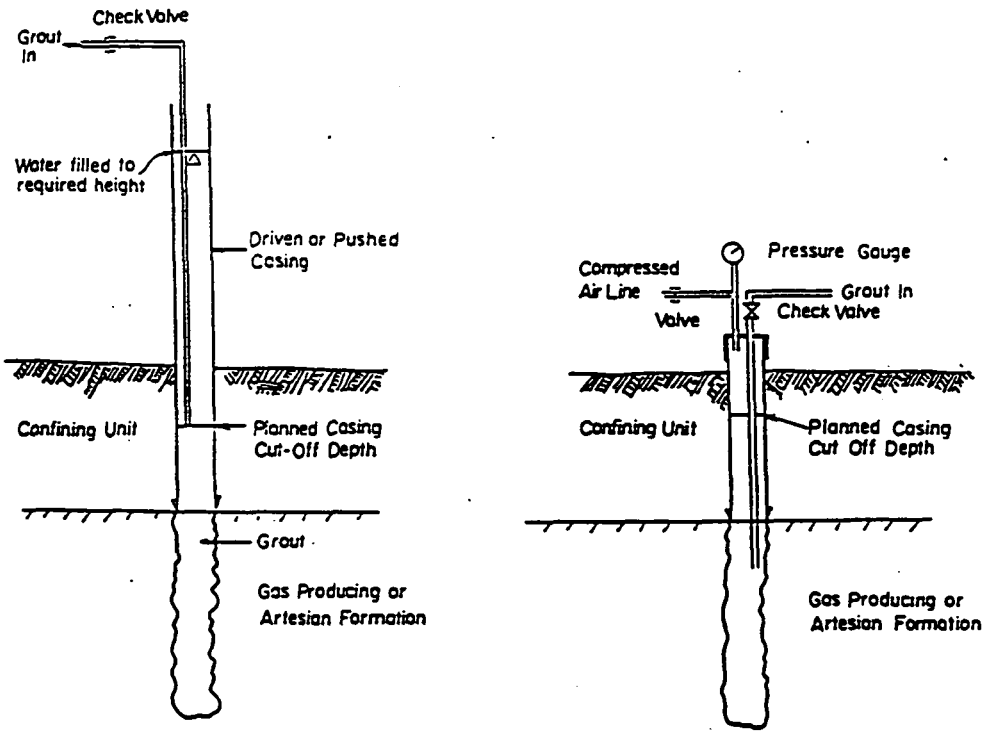

Stand Pipe To Contain Excess Formation Pressure

Compressed Air To Contain Excess Formation Pressure

FIG. 2 Two Procedures That Can Be Used to Overcome Elevated Formation Pressure

279

the annular space has been cemented over a long distance. This method may not be readily used unless a poor contact occurs between the casing and borehole. Small lengths of cement (typically less than 10 ft (3 m)) can be removed along with the casing if the drill rig has sufficient lifting capacity. When the casing cannot be removed, perforate the casing and screen using a suitable tool. This is necessary as encrustation or corrosion of the screen can block or completely close openings. A wide variety of commercial equipment is available for perforating casings and screens. Due to the diversity of application, consult an experienced contractor prior to selection of the technique. A minimum of four rows of perforations several inches (millimetres) long and a minimum of five perforations per linear foot (metre) of casing or screen is recommended.

7.3.8.4 Remove steel casing by overdrilling (overreaming) the casing. Overreaming can be done using an overreaming tool (see Fig. 3). Select a pilot bit that is nearly the same size as the inside diameter of the casing. The reaming bit should be slightly larger than the borehole diameter to remove all well construction materials and a small amount of native material. As drilling proceeds, the casing, grout, bentonite seal, filter pack, and other well materials are destroyed and returned to the surface. In situations when the grout in the annular space can be verified to be in good condition, it may be very difficult to remove casing and grout and grout can be left in place by pressure grouting the screened interval and casing. Verifying the integrity of the grout can be difficult.

7.3.8.5 PVC and other low tensile strength materials generally cannot be removed by pulling if they have been properly cemented into place. Overdrilling is necessary to remove these casing and screen materials.

7.3.8.6 A hollow stem auger equipped with outward facing carbide cutting teeth with a diameter 2 to 4 in. (50.8 to 1016 cm) larger than the casing may be used for overdrilling. Place the lead auger over the casing and rotate downward (see Fig. 4). The casing guides the cutting head and remains inside the auger. When the full diameter and length of the well has been penetrated, the casing and screen can be retrieved from the center of the auger. It is important to use outward facing cutting teeth in order that the cutting tool does not sever the casing and drift off center. An alternative is to install a steel guide pipe inside the well casing so that the augers can be centered.[6] Firmly attach this temporary working pipe to the inside of the casing by use of a packer, or other type of expansion or friction device. When the auger reaches full depth and the well materials have been removed, pump plugging materials through the hollow stem as the augers are withdrawn.

NOTE 14—Local regulations may allow leaving the PVC casing in place, if a good annular seal exists, or just removing blank casing if the integrity of the annular seal can be documented. It is generally difficult to document a good annular seal (tight fit, no fractures or channels) without the use of a cement bond log or similar method. A cement bond log cannot be run in small diameter wells (less than 2.5 in. (6.35 cm) in diameter) because a small diameter tool is not currently available. Also, this method is not reliable for PVC casings.

7.3.8.7 After removal of the casing, decommissioning can be completed in accordance with 7.3.6.

[6] Baker, Robert. Personal Communication. Layne Environmental. 1990.

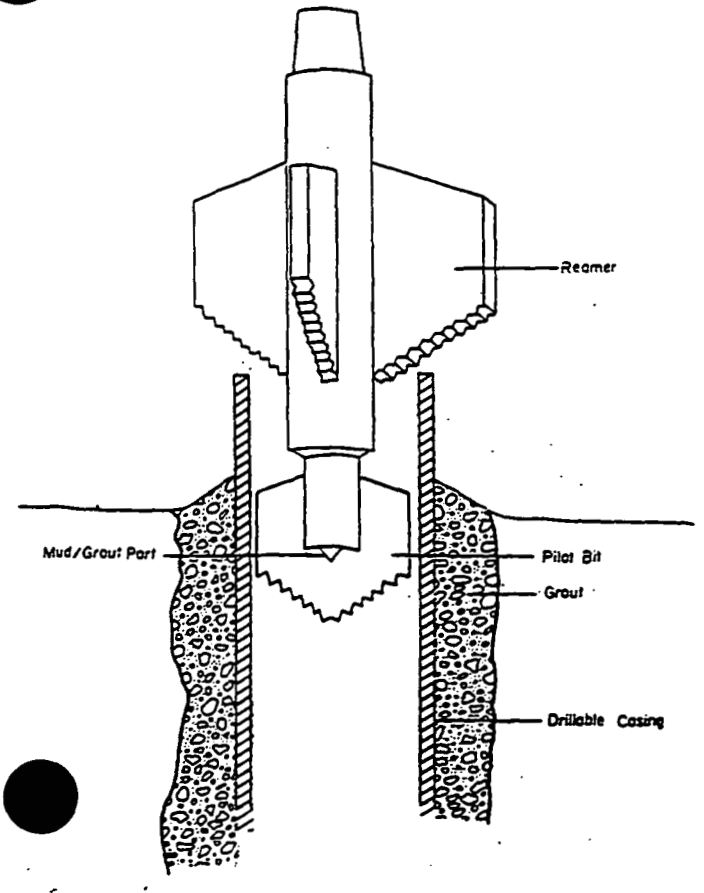

FIG. 3 Over Drilling by Mud Rotary Procedure

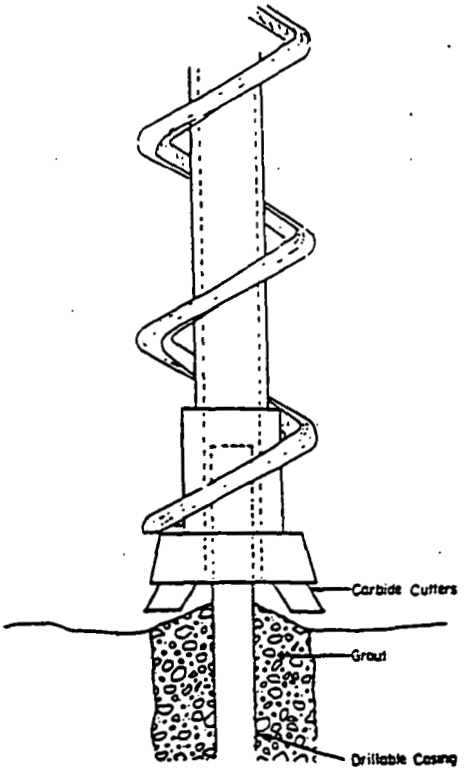

FIG. 4 Over Drilling by Hollow Stem Auger Procedure

NOTE 15—Wells with a maximum depth of 10 to 15 ft (3 to 4.6 m) can be removed by overdrilling, or when possible by pulling the casing out of the ground. The open hole is then filled with grout or other suitable plugging materials. A tamping rod can be used to tamp the material into place.

7.4 *Decontamination of Downhole Equipment:*

7.4.1 If hazardous waste or other contaminants occur at the site, decontaminate all tools placed into the borehole or well prior to entry (see Practice D 5088). Follow state and local regulations, if applicable. A hot water pressure wash or steam cleaning are examples of two typical decontamination methods. Other methods such as the use of solvents followed by rinsing with clean tap water and allowing equipment to air dry may also be acceptable. Also contain water and other materials used for decontamination for chemical analysis to determine proper disposal methods.

7.4.2 Do not flush grout pipes out with water while in or above the hole. Conduct all cleaning operations aboveground and manage appropriately as a hazardous or nonhazardous situation depending upon chemical analytical data on the site.

7.5 *Documentation:*

7.5.1 *Inspection Records*—The primary purpose of records of field work is to provide that appropriate measures have been taken so that the borehole or monitoring well is permanently decommissioned in a manner that minimizes it from being a conduit for fluid, water, or vapor migration. Properly decommissioned boreholes and wells should have no adverse influence on the local environment than the original geological setting.

7.5.2 *Narrative Report*—Maintain the narrative report of activities as a permanent record of the decommissioning activities and include the full set of field activities including:

7.5.2.1 Decommissioning date,

7.5.2.2 Personnel (with listing of company representation, including phone number and address),

7.5.2.3 Source of decommissioning method,

7.5.2.4 Step-by-step procedures used in the field,

7.5.2.5 Record of all measurements made, depths encountered, types and volume of fluids pumped and photographs before and after, and

7.5.2.6 All other pertinent information that is required based on site conditions or regulatory requirements. Any problems encountered should also be documented in detail.

8. Report

8.1 At the completion of field work, present a formal report to document the entire procedure used in the decommissioning process for the borehole or well. Additional information or requirements may be specified in government regulations and should also be included in this report. Report in detail the following items as a minimum:

8.1.1 *Background Information:*

8.1.1.1 Location of the borehole/well,

8.1.1.2 Purpose of the borehole/well,

8.1.1.3 History of the borehole/well,

8.1.1.4 Chemical parameters and concentrations present during the active life of the well and at the time of plugging; and

8.1.1.5 Information collected prior to the inspection record.

8.1.2 *Testing Prior to Decommissioning:*

8.1.2.1 Site characterization (if applicable),

8.1.2.2 Physical testing (depth, structural condition, etc.),

8.1.2.3 Chemical testing results (last chemical analysis for record), and

8.1.2.4 Geophysical logging results (if any).

8.1.3 *Decommissioning Design Procedure:*

8.1.3.1 Rationale for selection of method used, and

8.1.3.2 Presentation of a decommissioning plan.

8.1.4 *Field Implementation:*

8.1.4.1 Description of activities,

8.1.4.2 Variance from plan, and

8.1.4.3 Result of testing and measurements.

8.1.5 *Confirmation*—Statement of regulatory compliance.

9. Keywords

9.1 abandonment; decommissioning; ground water monitoring wells; hazardous waste; plugging

APPENDIX

(Nonmandatory Information)

X1. EXAMPLES OF SUCCESSFUL MONITORING WELL DECOMMISSIONING PRACTICES

X1.1 This appendix covers a general discussion of field procedures that have been used to decommission monitoring wells. These procedures are presented to provide technical guidance to assist in the development of decommissioning wells or boreholes. Local regulations may not allow implementation of some procedures. Two subsets of procedures are outlined, one for rigid steel casing and the second for lower tensile strength casing materials (plastic).

X1.2 *Steel Casing:*

X1.2.1 *Condition*—Properly grouted steel casing and screen, difficult to pull casing:

X1.2.1.1 *Suggestion*—Pressure pump plugging materials into well to above aquifer, place 3-ft (.91-mm) plug of plastic material (bentonite plug) above rigid plug then complete with rigid plugging material to surface. Place a PVC or neoprene plug or packer, located at the base of the rigid (cement) material to reduce the co-mingling of fluids due to different specific gravities. Complete decommissioning at surface according to local regulations.

X1.2.1.2 *Alternative*—Perforate steel casing and screen to allow plugging material to come into contact with the annular space and formation.

X1.2.1.3 *Advantage*—If (when) casing material corrodes, the continually plastic bentonite plug will continue to provide a suitable sealing zone.

281

X1.2.2 *Condition*—Steel well materials, that are remov-

X1.2.2.1 *Suggestion*—Pull screen and casing, then redrill borehole to original depth using slightly larger diameter drill bit than the borehole. Complete closure by pressure sealing the borehole by grout pipe from bottom to top.

X1.2.2.2 *Advantage*—Casing and annular materials are completely removed and replaced with sealing material of equal or lower permeability (saturated zone) than the native geologic materials.

X1.2.3 *Condition*—Shallow screened well completed into permeable sand or gravel aquifer:

X1.2.3.1 *Suggestion*—Pull the casing and screen (grout also, if possible) then redrill the borehole to original depth. Completion should be by pressure sealing to the surface.

X1.2.3.2 *Advantage*—The possibility of hydraulic connections with the surface is greatly reduced.

X1.2.4 *Condition*—Steel casing and screen set into highly permeable formation (such as fractured limestone) that results in lost fluid circulation during drilling or decommissioning procedures:

X1.2.4.1 *Suggestion*—Fill highly permeable section with quick setting cement grout (addition of calcium chloride), or coarse gravel to base of casing, or hang "cement basket" at base of casing. Complete decommissioning with plugging materials pumped into place, including at least one section of permanent plastic seal.

X1.2.4.2 *Advantage*—Extremely permeable or highly cav- materials may not be able to be filled sufficiently to closure similar to other cases. In such situations, vention of vertical migration of fluids to or from that zone is the primary purpose of decommissioning.

X1.3 *Low-Tensile Strength Materials (that is, PVC, ABS, PTFE):*

X1.3.1 *Condition*—Properly constructed well that has a sealed annulus from the surface to the top of screen:

X1.3.1.1 *Suggestions*—Pressure grout in place after perforating the entire casing so that the screen and gravel pack are filled with grout; or over-ream the well using a drill bit diameter that is a minimum or slightly larger than the diameter of the annular space.

X1.3.2 *Condition*—Annulus is not permanently sealed and casing/screen cannot be pulled:

X1.3.2.1 *Suggestion*—Overdrill casing, screen and filter pack with a hollow stemmed auger or other suitable drilling method. Remove casing from bottom to top as augers are removed.

X1.3.2.2 *Advantage*—Complete well structure is removed. Grouting materials provide no avenue of fluid or gas migration after decommissioning.

X1.3.3 *Condition*—Annulus seal questionable; casing screen cannot be pulled:

X1.3.3.1 *Suggestion*—Use rotary tools equipped with pilot bit. Large portion of bit must be equal to or larger than diameter of original borehole. Drill out casing, annular material, to depth of well. Pressure seal after tools are removed.

X1.3.3.2 *Advantage*—Complete well structure is removed. Grouting materials do not provide pathways for fluid or gas migration after decommissioning.

X1.3.4 *Condition*—Annulus seal questionable, casing and screen may be pulled from firm clay soils:

X1.3.4.1 *Suggestion*—Use pulling rig equipped with down hole casing latch tool. Anchor tool at bottom of well and lift casing and screen. Pressure grout open hole from bottom to top. (This method may have applicability for shallow wells.)

X1.3.4.2 *Advantage*—This method is often possible in firm clay soils. Requires less expensive equipment than other procedures.

X1.3.5 *Condition*—Vadose zone monitoring devices such as lysimeters, tensiometers, neutron access holes, and similar devices installed vertically:

X1.3.5.1 *Suggestion*—Drill out the device and backfill as suggested in 7.3.8.5 and 7.3.8.6. (See also Note 15 in the text.)

X1.3.5.2 *Advantage*—The device and materials used to construct the device are removed reducing the potential for fluid movement from the surface to underlying materials and ground water.

REFERENCES

(1) Gaber, M. S., and Fisher, B., *Michigan Water Well Grouting Manual*, Michigan Department of Public Health, Lansing, MI, 1988, pp. 83.

(2) Roscoe Moss Company, *Handbook of Ground Water Development, Chapter 12, Water Well Cementing*, John Wiley, New York, NY 1990, pp. 232–252.

(3) Dowell Division of Dow Chemical, U.S.A., *Engineer's Handbook*, Houston, 1983, p. 77.027.

(4) Williams, Camila, and Evans, L., "Guide to the Selection of Cement, Bentonite, and Other Additives for Use in Monitor Well Construction," *First National Outdoor Action Conference on Aquifer Restoration, Monitoring and Geophysical Methods*, NWWA, Las Vegas, NV, 1987, pp. 325–343.

(5) George, Charles, and Bruce, T., "Cementing to Achieve Zone lation in Disposal Wells," in *International Symposium Subsur- e Inspection of Liquid Wastes*, NWWA, New Orleans, LA, March 3–6, 1986, pp. 77–89.

(6) Anonymous, "Special Cements and Their Uses," *Concrete Construction*, Vol 18, No. 1, January, 1973, pp. 3–7.

(7) Berry, E., and Malhortra, V., "Fly Ash for Use in Concrete—A Critical Review," *Journal of the American Concrete Institute*, Vol 77, No. 2, 1980, pp. 57–73.

(8) Coleman, R. J., and Corrigan, G., "Fineness and Water-to-Cement Ratio in Relation to Volume and Permeability of Cement," *Petroleum Technology, Technical Publication No. 1266*, 1941, pp. 1–11.

(9) Dowell Schumberger, *Cementing Technology*, Nova Communications Ltd., New York, 1984.

(10) Creech, John, 1986, "Class I Injection Well Design Considerations Using Fiberglass Tubular and Epoxy Cement," *Proceedings of International Symposium Subsurface Injections of Liquid Wastes*, New Orleans, LA, March 3–5, 1986.

(11) Cole, Robert C., "Epoxy Sealant for Combating Well Corrosion," *International Symposium on Oilfield and Geothermal Chemistry*, SPE of AIME, Houston, 1979.

(12) Jeffries, S. A., "Bentonite-Cement Slurries for Hydraulic Cut-Offs," *Soil Mechanics and Foundation Engineering*, Tenth International Congress, Vol 1, Stockholm, 1981, pp. 435–440.

(13) Herndon. Joe. and Smith. Dwight K., "Settling Downhole Plugs: A State-of-the-Art," *Petroleum Engineer International*, Vol 50, No. 4, April 1978, p. 56.

(14) Smith. D. K., Cementing, "Society of Petroleum Engineers Monograp Series," Vol 4, *Society of Petroleum Engineers of AIME*, 1976.

(15) U.S. EPA, "Construction Requirements for Wells Authorized by Rule," 40 CRF 147.2912b(1), (*Subpart GGG, Osage Mineral Reserve, Class II Wells*), 1988.

(16) Portland Cement Association, *Design and Control of Concrete Mixtures*, Skokie, IL, 1979.

The American Society for Testing and Materials takes no position respecting the validity of any patent rights asserted in connection with any item mentioned in this standard. Users of this standard are expressly advised that determination of the validity of any such patent rights, and the risk of infringement of such rights, are entirely their own responsibility.

This standard is subject to revision at any time by the responsible technical committee and must be reviewed every five years and if not revised, either reapproved or withdrawn. Your comments are invited either for revision of this standard or for additional standards and should be addressed to ASTM Headquarters. Your comments will receive careful consideration at a meeting of the responsible technical committee, which you may attend. If you feel that your comments have not received a fair hearing you should make your views known to the ASTM Committee on Standards, 1916 Race St., Philadelphia, PA 19103.

283

Appendix J

APPENDIX J

SUMMARY OF EXISTING GEOTECHNICAL LABORATORY DATA - FORMER PLANT AREA

The geotechnical laboratory data are summarized in the following table. The notes and explanation provided below will be useful in understanding the information in the table.

1. Area:

   NE - North East quadrant of Former Plant Area.
   NW - North West quadrant of Former Plant Area.
   SE - South East quadrant of Former Plant Area.
   SW - South West quadrant of Former Plant Area.

2. Soil Type:

   FG - Fine Grained
   CG - Coarse Grained

3. Laboratory Test:

MC	Moisture Content
SG	Specific Gravity
GS	Grain-size Analysis
AL	Atterberg Limits
UW	Unit Weight (see note 4)
CON	Consolidation Test
UCS	Unconfined Compressive Strength
UU	Unconsolidated - Undrained Triaxial Compression Test
CU	Consolidated - Undrained Triaxial Compression Test
PERM	Permeability Test
SP	Standard Proctor Compaction Test
MP	Modified Proctor Compaction Test
CBR	California Bearing Ratio Test

4. Unit weight data also available from most CON, UCS, UU, CU, and PERM test data.

5. References:

50.03.24 "FEMP Glacial Till/Vadose Zone Hydraulic Investigations Report," Operable Unit 5, Project Order 37, May 1994. (RI/FS WBS No. 602.50.03.24). PARSONS, Fairfield, Ohio.

S&ME 021-86-169 "Slag Leach Facility, Uranium Control Pad, Drum Reconditioning Building, Feed Materials Production Center, Fernald, Ohio," Soil and Material Engineers Inc., Project No. 021-86-169, June 30, 1986.

S&ME 021-86-162 "Buildings 6 and 8 Expansion, Feed Materials Production Center, Fernald, Ohio," Soil and Material Engineers Inc., Project No. 021-86-162, June 9, 1986.

S&ME 1221-87-178-1.0 "Decladding and Box Furnace Facility, Feed Materials Production Center, Fernald, Ohio," Soil and Material Engineers Inc., Project No. 1221-87-178-1.0, May 15, 1987.

S&ME 1221-87-178-2.0 "General Sump, Feed Materials Production Center, Fernald, Ohio," Soil and Material Engineers Inc., Project No. 121-87-178-2.0, May 18, 1987.

S&ME 1221-87-257 "Proposed Laundry Room Upgrade/Locker Room Upgrade, Feed Materials Production Center, Fernald, Ohio," Soil and Material Engineers Inc., Project No. 1221-87-257, July 28, 1987.

S&ME 021-86-363 "Proposed Training Center and In Vivo Building, Feed Materials Production Center, Fernald, Ohio," Soil and Material Engineers Inc., Project No. 021-87-363, January 19, 1986.

S&ME 021-84-215 "NLO Facility UF_6-UF_4 Facilities Expansion," Soil and Material Engineers Inc., Project No. 021-84-215, January 19, 1986.

S&ME 021-84-215 "NLO Fernald, Ohio Plant 5 Expansion," Soil and Material Engineers, Inc., Project No. 021-84-215, August 31, 1984.

S&ME 1221-87-114 "Derby Breakout and Slag Milling Area," Soil and Material Engineers, Inc., Project No.1221-87-114, February 16, 1987.

S&ME 1221-87-178-3.0 "N_2 Systems, Feed Materials Production Center, Fernald, Ohio," Soil and Material Engineers Inc., Project No. 1221-87-178-3.0, May 21, 1987.

S&ME 021-86-261 "Existing Water Storage Tank, Feed Materials Production Center, Fernald, Ohio," Soil and Material Engineers Inc., Project No. 021-86-261, August 29, 1986.

S&ME 1221-87-288 "Water Treatment Plant, Feed Materials Production Center, Fernald, Ohio," Soil and Material Engineers Inc., Project No. 1221-87-288-1, September 9, 1987.

S&ME 1221-87-288-2.0 "Nu-Sal Furnace," Soil and Material Engineers, Inc., Project No. 1221-87-288-2.0, September 21, 1987.

S&ME 021-84-269 "NLO Railroad Relocation, Feed Materials Production Center, Fernald, Ohio," Soil and Material Engineers Inc., Project No. 021-84-269, November 12, 1984.

S&ME 4144-88-309 "Geotechnical Exploration Coal Storage Pile, Feed Materials Production Center, Fernald, Ohio," Soil and Material Engineers Inc., Project No. 4144-88-309, September 20, 1988.

S&ME 22-23071 "FMPC Water Pollution Control," ATEC Associates, Inc., Job No. 22-23071, 1982, Cincinnati, Ohio.

S&ME 4144-88-119	"Receiving and Incoming Materials Inspection Area, Feed Materials Production Center, Fernald, Ohio," Soil and Material Engineers Inc., Project No. 4144-88-119, March 14, 1988.
NUTTING S-1143	"Report of Geotechnical Investigation, NLO, Inc. Supply/Services, Subcontract No. S-1143," H.C. Nutting Company, Cincinnati, Ohio, 1984.
ATEC 22-831858	"Analytical Facilities Expansion," ATEC Associates, Inc., Job No. 22-8318581988, Cincinnati, Ohio.
S&ME 1221-87-160-2.0	"NOX Destructor Facility, Feed Materials Production Center, Fernald, Ohio," Soil and Material Engineers Inc., Project No. 1221-87-160-2.0, April 9, 1987.
S&ME 1221-87-160-1.0	"Decontamination and Decommissioning Facility, Feed Materials Production Center, Fernald, Ohio," Soil and Material Engineers Inc., Project No. 1221-87-160-1.0, April 27, 1987.
S&ME 1221-87-159	"Proposed Warehouse, Feed Materials Production Center, Fernald, Ohio," Soil and Material Engineers Inc., Project No. 1221-87-159, April 22, 1987.
USACOE 1952	"Report of Foundation Investigation, Feed Materials Production Center, Fernald, Ohio," U.S. Army Corps of Engineers, Ohio River Division Laboratories, February, 1952.
PARSONS PO 20	"Central Storage Facility Subsurface Exploration," Operable Unit 3, Revision 0, September 1993, PARSONS, Fairfield, Ohio.
PARSONS PO 22	"Subsurface Exploration Report Plant 1 Ore Silos," Revision 0, September 1993, PARSONS, Fairfield, Ohio.
PARSONS PO 32	"Plant 7 Dismantling Geotechnical Report," Operable Unit 3, Revision 0, July 1993, PARSONS, Fairfield, Ohio.

288

Summary of Existing Geotechnical Laboratory Test Data
Former Plant Area

Area	FEMP ID	Other ID	Top Depth	Bot Depth	Soil Type	MC	SG	GS	AL	UW	CON	UCS	UU	CU	PERM	SP	MP	CBR	Reference
NW	11112		1	1.5	FG			1											50.03.24
NW	11112		4	4.5	CG			1											50.03.24
NW	11112		7	7.5	CG			1											50.03.24
NW	11112		8.5	9	CG			1											50.03.24
NW	11112		14	14.5	FG			1											50.03.24
NW	11112		14.5	17	FG			1											50.03.24
NW	11112		17	19	FG			1											50.03.24
NW	11114		1	1.5	FG			1											50.03.24
NW	11114		2.5	3	FG			1											50.03.24
NW	11114		3	3.5	CG			1											50.03.24
NW	11114		3.5	4	CG			1											50.03.24
NW	11114		5.5	6	CG			1											50.03.24
NW	11114		8.5	9	CG			1											50.03.24
NW	11114		14.5	15	CG			1											50.03.24
NW	11114		16.5	17	CG/FG			1											50.03.24
NW	11114		17	17.5	FG			1											50.03.24
NW	11115		1	1.5	FG			1											50.03.24
NW	11115		2	2.5	CG			1											50.03.24
NW	11115		4	4.5	CG			1											50.03.24
NW	11115		5.5	6	CG			1											50.03.24
NW	11115		7	7.5	CG			1											50.03.24
NW	11115		8	8.5	CG			1											50.03.24
NW	11115		8.5	9	CG			1											50.03.24
NW	11115		11.5	12	CG			1											50.03.24
NW	11115		13	13.5	CG			1											50.03.24
NW	11115		17	17.5	FG			1											50.03.24
NW	11116		1	1.5	FG			1											50.03.24
NW	11116		4	4.5	FG			1											50.03.24
NW	11116		5	5.5	CG			1											50.03.24
NW	11116		5.5	6	CG			1											50.03.24
NW	11116		7	7.5	CG			1											50.03.24
NW	11116		8.5	9	CG			1											50.03.24
NW	11116		10	10.5	CG			1											50.03.24
NW	11116		10.5	11	CG			1											50.03.24
NW	11116		11.5	12	CG			1											50.03.24
NW	11116		13	13.5	CG			1											50.03.24
NW	11116		13.5	14	CG/FG			1											50.03.24
SW	11120		1	1.5	FG			1											50.03.24
SW	11120		2	2.5	FG			1											50.03.24
SW	11120		6	6.5	FG			1											50.03.24

Summary of Existing Geotechnical Laboratory Test Data
Former Plant Area

Area	FEMP ID	Other ID	Top Depth	Bot Depth	Soil Type	MC	SG	GS	AL	UW	CON	UCS	UU	CU	PERM	SP	MP	CBR	Reference
SW	11120		8	8.5	FG/CG			1											50.03.24
SW	11120		10.5	11	CG			1											50.03.24
SW	11120		12	12.5	CG			1											50.03.24
SW	11120		14	14.5	CG			1											50.03.24
SW	11120		18	18.5	CG			1											50.03.24
SW	11120		19.5	20	CG			1											50.03.24
SW	11120		20	20.5	CG			1											50.03.24
SW	11120		20.5	21	FG			1											50.03.24
SW	11120		21	21.5	FG			1											50.03.24
SW	11120		23	23.5	FG			1											50.03.24
SW	11121		1.5	2	FG			1											50.03.24
SW	11121		4.5	5	FG			1											50.03.24
SW	11121		6	6.5	FG			1											50.03.24
SW	11121		8.5	9	CG			1											50.03.24
SW	11121		10.5	11	CG			1											50.03.24
SW	11121		14.5	15	CG			1											50.03.24
SW	11121		15	15.5	CG			1											50.03.24
SW	11121		16.5	17	CG			1											50.03.24
SW	11121		20	20.5	CG			1											50.03.24
SW	11121		24	24.5	FG			1											50.03.24
NE	11132		2.5	25	FG			1											50.03.24
NE	11133		0	0.5	FG			1											50.03.24
NE	11133		4.5	5	FG			1											50.03.24
NE	11133		7.5	8	FG			1											50.03.24
NE	11133		9	9.5	FG			1											50.03.24
NE	11133		10	10.5	FG			1											50.03.24
NE	11133		11	11.5	FG			1											50.03.24
NE	11133		12	12.5	FG			1											50.03.24
NE	11133		14	14.5	FG			1											50.03.24
NE	11133		21	21.5	FG			1											50.03.24
NE	11133		27	27.5	FG			1											50.03.24
NE	11133		31.5	34.5	FG			1											50.03.24
NE	11133		31.5	32	FG			1											50.03.24
NE	11133		35	35.5	FG			1											50.03.24
NE	11133		34.5	37.5	FG			1											50.03.24
NE	11133		37.5	38	FG			1											50.03.24
NE	11133		39	39.5	FG			1											50.03.24
NE	11133		40.5	41	CG			1											50.03.24
NE	11133		42	42.5	CG			1											50.03.24
NE	11133		43.5	44	CG			1											50.03.24

289

756

290

Summary of Existing Geotechnical Laboratory Test Data
Former Plant Area

Area	FEMP ID	Other ID	Top Depth	Bot Depth	Soil Type	MC	SG	GS	AL	UW	CON	UCS	UU	CU	PERM	SP	MP	CBR	Reference
NW	11208		1	1.5	CG			1											50.03.24
NW	11208		1.5	2	CG			1											50.03.24
NW	11208		2.5	3	FG			1											50.03.24
NW	11208		3.5	4	CG			1											50.03.24
NW	11208		5.5	6	CG			1											50.03.24
NW	11208		10	10.5	CG			1											50.03.24
NW	11208		10.5	11	FG			1											50.03.24
NW	11208		11	11.5	CG			1											50.03.24
NW	11208		11.5	12	CG			1											50.03.24
NW	11208		13.5	14	FG			1											50.03.24
NW	11209		1	1.5	FG			1											50.03.24
NW	11209		1.5	2	CG			1											50.03.24
NW	11209		2.5	3	CG			1											50.03.24
NW	11209		4	4.5	CG			1											50.03.24
NW	11209		5	5.5	CG			1											50.03.24
NW	11209		7	7.5	CG			1											50.03.24
NW	11209		10	10.5	CG			1											50.03.24
NW	11209		13	13.5	CG			1											50.03.24
NW	11209		16	16.5	CG			1											50.03.24
NW	11209		20.5	21	FG			1											50.03.24
NW	11211		1.5	2	FG			1											50.03.24
NW	11211		5	5.5	FG			1											50.03.24
NW	11211		8.5	9	FG			1											50.03.24
NW	11211		9	9.5	FG/CG			1											50.03.24
NW	11211		10	10.5	FG			1											50.03.24
NW	11211		10.5	11	CG			1											50.03.24
NW	11211		12	12.5	FG			1											50.03.24
NW	11211		14	14.5	CG			1											50.03.24
NW	11211		15	15.5	CG			1											50.03.24
NW	11211		16	16.5	CG			1											50.03.24
NW	11211		20	20.5	CG			1											50.03.24
NW	11211		20.5	21	FG			1											50.03.24
NW	11211		21	21.5	FG			1											50.03.24
NW	11211		22.5	23	CG			1											50.03.24
NW	11211		23	23.5	CG/FG			1											50.03.24
SW	11581	107(1)	3	5	FG	1	1	1	1		1			1					S&ME 021-86-169
SW	11581	107(1)	8	8.5	FG	1													S&ME 021-86-169
SW	11581	107(1)	10	11.5	FG	1		1	1										S&ME 021-86-169
SW	11582	108(2)	0	6	FG		1										1	1	S&ME 021-86-169
SW	11582	108(2)	2.5	4	FG	1		1	1										S&ME 021-86-169

Summary of Existing Geotechnical Laboratory Test Data
Former Plant Area

Area	FEMP ID	Other ID	Top Depth	Bot Depth	Soil Type	MC	SG	GS	AL	UW	CON	UCS	UU	CU	PERM	SP	MP	CBR	Reference
SW	11582	108(2)	5	6.5	FG	1													S&ME 021-86-169
SW	11583	109(4)	4	5	FG	1	1	1	1				1						S&ME 021-86-162
SW	11585	111(6)	0	1.5	FG	1													S&ME 021-86-162
SW	11585	111(6)	2.5	4	FG	1													S&ME 021-86-162
SW	11585	111(6)	5	6.5	CG	1													S&ME 021-86-162
SW	11585	111(6)	7.5	9	FG	1													S&ME 021-86-162
SW	11586	112(1)	0	1.5	CG	1													S&ME 021-86-162
SW	11586	112(1)	2.5	4	FG	1						1							S&ME 021-86-162
SW	11587	113(2)	1	5	CG		1	1	1								1	1	S&ME 021-86-162
SW	11587	113(2)	4	6	FG	1		1	1					1					S&ME 021-86-162
SW	11588	114(3)	0	1.5	FG	1													S&ME 021-86-162
SW	11588	114(3)	2.5	4	FG	1													S&ME 021-86-162
SW	11588	114(3)	5	6.5	FG	1													S&ME 021-86-162
SW	11589	115(7)	0	1.5	CG	1													S&ME 021-86-162
SW	11589	115(7)	5	6.5	FG	1						1							S&ME 021-86-162
SW	11590	116(5)	7	9	FG		1	1	1		1	1							S&ME 021-86-162
SW	11595	121(1)	1	3	FG	1													S&ME 1221-87-178-1.0
SW	11595	121(1)	3	5	FG			1	1										S&ME 1221-87-178-1.0
SW	11595	121(1)	4.5	9	FG	1													S&ME 1221-87-178-1.0
SW	11595	121(1)	5	6.5	FG	1													S&ME 1221-87-178-1.0
SW	11597	123(2)	0	2	CG	1													S&ME 1221-87-178-1.0
SW	11597	123(2)	1	5	FG		1	1									1	1	S&ME 1221-87-178-1.0
SW	11597	123(2)	2	3.5	FG	1													S&ME 1221-87-178-1.0
SW	11597	123(2)	3.5	5	FG	1						1							S&ME 1221-87-178-1.0
SW	11598	124(3)	1	2	FG	1													S&ME 1221-87-178-1.0
SW	11598	124(3)	2	3	FG	1	1												S&ME 1221-87-178-1.0
SW	11598	124(3)	3	5	FG	1					1	1							S&ME 1221-87-178-1.0
SW	11598	124(3)	5	6.5	FG	1													S&ME 1221-87-178-1.0
SW	11598	124(3)	7.5	9	FG	1													S&ME 1221-87-178-1.0
SW	11599	125(7)	1.5	3	FG	1													S&ME 1221-87-178-2.0
SW	11599	125(7)	3	4.5	FG	1		1	1			1							S&ME 1221-87-178-2.0
SW	11599	125(7)	5	6.5	FG	1													S&ME 1221-87-178-2.0
SW	11599	125(7)	7.5	9	FG	1													S&ME 1221-87-178-2.0
SW	11797	126(6)	2	2.5	FG	1													S&ME 1221-87-178-2.0
SW	11797	126(6)	2.5	3	FG	1													S&ME 1221-87-178-2.0
SW	11797	126(6)	3	5	FG	1		1	1			1							S&ME 1221-87-178-2.0
SW	11798	127(1)	0	1.5	FG	1													S&ME 021-86-169
SW	11798	127(1)	2.5	4	FG	1													S&ME 021-86-169
SW	11798	127(1)	5	6.5	FG	1						1							S&ME 021-86-169
SW	11799	128(2)	0	1.5	FG	1													S&ME 021-86-169

292

Summary of Existing Geotechnical Laboratory Test Data
Former Plant Area

Area	FEMP ID	Other ID	Top Depth	Bot Depth	Soil Type	MC	SG	GS	AL	UW	CON	UCS	UU	CU	PERM	SP	MP	CBR	Reference
SW	11799	128(2)	1	5	FG		1	1	1								1		S&ME 021-86-169
SW	11799	128(2)	2.5	4	FG	1													S&ME 021-86-169
SW	11799	128(2)	5	7	FG	1	1	1	1		1			1					S&ME 021-86-169
SW	11800	129(4)	5	7	FG	1						1							S&ME 1221-87-178-2.0
SW	11801	130(5)	0.5	1	FG	1													S&ME 1221-87-178-2.0
SW	11801	130(5)	1.5	3	FG	1						1							S&ME 1221-87-178-2.0
NW	11802	131(2)	0	1.5	FG	1		1	1	1		1							S&ME 021-86-169
NW	11802	131(2)	5	6.5	FG	1													S&ME 021-86-169
NW	11803	132(2)	0	1.5	FG	1													S&ME 021-86-169
NW	11803	132(2)	1	5	FG		1	1	1								1	1	S&ME 021-86-169
NW	11803	132(2)	2.5	4	FG	1													S&ME 021-86-169
NW	11804	133(2)	2.5	4	FG	1													S&ME 021-86-169
NW	11804	133(2)	5	7	FG	1	1	1	1	1		1							S&ME 021-86-169
NW	11805	134(4)	0	1.5	FG	1													S&ME 021-86-169
NW	11805	134(4)	2.5	4	FG	1					1								S&ME 021-86-169
NW	11806	135(5)	5	6.5	FG	1													S&ME 021-86-169
NW	11806	135(5)	7	9	FG		1	1	1					1					S&ME 021-86-169
SE	11807	136(1)	5	6.5	FG	1													S&ME 1221-87-257
SE	11807	136(1)	7.5	9	FG	1													S&ME 1221-87-257
SE	11807	136(1)	10	11.5	FG	1													S&ME 1221-87-257
SE	11807	136(1)	15	16.5	FG	1													S&ME 1221-87-257
SE	11807	136(1)	20	21.5	FG	1													S&ME 1221-87-257
SE	11807	136(1)	25	26.5	CG	1													S&ME 1221-87-257
SE	11807	136(1)	30	31.5	CG	1													S&ME 1221-87-257
SE	11809	138(5)	3	5	FG	1		1	1			1							S&ME 1221-87-257
SE	11813	141(3)	3	5	FG	1						1							S&ME 1221-87-257
SE	11813	141(3)	5	6.5	FG	1													S&ME 1221-87-257
SE	11813	141(3)	7.5	9	FG	1													S&ME 1221-87-257
SE	11813	141(3)	10	11.5	FG	1													S&ME 1221-87-257
SE	11813	141(3)	15	16.5	FG	1													S&ME 1221-87-257
SE	11813	141(3)	25	26.5	CG	1													S&ME 1221-87-257
SE	11816	144(4)	2.5	4	FG	1		1	1			1							S&ME 021-86-363
SE	11817	145(2)	1	5	FG			1	1								1	1	S&ME 021-86-363
SE	11818	146(3)	2.5	4.5	FG	1			1			1							S&ME 021-86-363
SE	11819	147(1)	5	5	FG	1		1	1										S&ME 021-86-363
SE	11820	148(1)	4	5.5	FG	1													S&ME 021-86-363
SE	11820	148(1)	6.5	8	FG	1													S&ME 021-86-363
SE	11821	149(3)	1	5	FG			1	1								1	1	S&ME 021-86-363
SE	11821	149(3)	4	5.5	FG	1		1	1			1							S&ME 021-86-363
SE	11821	149(3)	9	11	FG	1		1	1				1						S&ME 021-86-363

Summary of Existing Geotechnical Laboratory Test Data
Former Plant Area

Area	FEMP ID	Other ID	Top Depth	Bot Depth	Soil Type	MC	SG	GS	AL	UW	CON	UCS	UU	CU	PERM	SP	MP	CBR	Reference
SE	11822	150(4)	2	4	FG	1						1							S&ME 021-86-363
SE	11823	151(6)	9	11	FG	1		1	1		1								S&ME 021-86-363
SE	11825	153(5)	5	6	FG	1			1			1							S&ME 021-86-363
SE	11826	154(7)	1.5	3	FG	1			1										S&ME 021-84-215
SE	11826	154(7)	7	9	FG	1		1	1				1						S&ME 021-84-215
SE	11827	155(4)	7.5	9.5	FG	1		1	1				1						S&ME 021-84-215
SE	11828	156(2)	14	16	FG	1													S&ME 021-84-215
SE	11832	160(5)	2.5	4	FG	1													S&ME 1221-87-114
SE	11832	160(5)	5	7	FG	1		1	1					1					S&ME 1221-87-114
SE	11832	160(5)	0	3	FG												1	1	S&ME 1221-87-114
SE	11833	161(7)	5	6.5	FG	1													S&ME 1221-87-114
SE	11833	161(7)	7.5	9	FG	1													S&ME 1221-87-114
SE	11834	162(2)	2.5	4	FG	1													S&ME 1221-87-114
SE	11834	162(2)	5	6.5	FG	1													S&ME 1221-87-114
SE	11835	163(6)	1.5	3	FG	1													S&ME 021-84-215
SE	11835	163(6)	4.5	6	FG	1													S&ME 021-84-215
SE	11835	163(6)	7	8.5	FG	1													S&ME 021-84-215
SE	11835	163(6)	9.5	11	FG	1													S&ME 021-84-215
SE	11835	163(6)	14.5	16	FG	1													S&ME 021-84-215
SE	11835	163(6)	19.5	20	FG	1													S&ME 021-84-215
SE	11835	163(6)	24.5	26	CG	1		1											S&ME 021-84-215
SE	11837	165(6)	2.5	4	FG	1													S&ME 1221-87-114
SE	11837	165(6)	5	6.5	FG	1													S&ME 1221-87-114
SE	11837	165(6)	7.5	9	FG	1			1										S&ME 1221-87-114
SE	11838	166(1)	1	3	FG	1			1			1							S&ME 1221-87-114
SE	11838	166(1)	5	6.5	FG	1													S&ME 1221-87-114
SE	11838	166(1)	7.5	9	FG	1													S&ME 1221-87-114
SE	11840	168(11)	3	5	FG	1						1							S&ME 1221-87-178.3.0
SE	11842	170(5)	9.5	11.5	FG	1													S&ME 021-84-215
SE	11843	171(9)	0.5	1	FG	1													S&ME 1221-87-178.3.0
SE	11843	171(9)	1	1.5	FG	1													S&ME 1221-87-178.3.0
SE	11843	171(9)	1.5	2	FG	1													S&ME 1221-87-178.3.0
SE	11843	171(9)	1	5	FG			1	1								1	1	S&ME 1221-87-178.3.0
SE	11844	172(8)	1	1.5	FG	1													S&ME 1221-87-178.3.0
SE	11844	172(8)	3	5	FG	1		1	1			1							S&ME 1221-87-178.3.0
SE	11844	172(8)	7.5	9	FG	1													S&ME 1221-87-178.3.0
NE	11845	173(1)	5	6.5	FG	1						1							S&ME 021-86-261
NE	11845	173(1)	7.5	9	FG	1	1	1	1			1							S&ME 021-86-261
NE	11845	173(1)	15	16.5	CG	1	1	1	1										S&ME 021-86-261
NE	11845	173(1)	30	31	FG	1	1	1	1										S&ME 021-86-261

294

Summary of Existing Geotechnical Laboratory Test Data
Former Plant Area

Area	FEMP ID	Other ID	Top Depth	Bot Depth	Soil Type	MC	SG	GS	AL	UW	CON	UCS	UU	CU	PERM	SP	MP	CBR	Reference
NE	11845	173(1)	35	36.5	CG			1											S&ME 021-86-261
NE	11845	173(1)	45	46.5	CG			1											S&ME 021-86-261
NE	11845	173(1)	55	56	CG			1											S&ME 021-86-261
NE	11845	173(1)	58	60	CG			1											S&ME 021-86-261
NE	11846	174(2)	5	6.5	FG	1													S&ME 1221-87-288
NE	11846	174(2)	7.5	9	FG	1													S&ME 1221-87-288
NE	11847	175(3)	5	6.5	FG	1													S&ME 1221-87-288
NE	11847	175(3)	7.5	9	FG			1	1			1							S&ME 1221-87-288
NE	11847	175(3)	10	11.5	FG														S&ME 1221-87-288
NE	11848	176(1)	5	6.5	FG	1													S&ME 1221-87-288
NE	11848	176(1)	7.5	9	FG	1													S&ME 1221-87-288
NE	11848	176(1)	10	11.5	FG	1													S&ME 1221-87-288
NE	11848	176(1)	15	16.5	FG	1													S&ME 1221-87-288
NE	11848	176(1)	20	21.5	FG	1													S&ME 1221-87-288
NE	11848	176(1)	25	26.5	FG	1													S&ME 1221-87-288
NE	11848	176(1)	28.5	30	FG	1													S&ME 1221-87-288
SE	11861	188(7)	0	1.5	FG	1													S&ME 021-86-162
SE	11861	188(7)	5	6.5	FG	1						1							S&ME 021-86-162
SE	11862	189(4)	0	1.5	FG/CG	1													S&ME 021-86-162
SE	11862	189(4)	3	4.5	FG	1	1	1	1					1					S&ME 021-86-162
SE	11862	189(4)	4.5	5	FG	1			1			1							S&ME 021-86-162
SE	11863	190(5)	3	5	FG	1	1	1	1		1								S&ME 021-86-162
SE	11864	191(6)	0	1.5	FG	1													S&ME 021-86-162
SE	11864	191(6)	5	6.5	FG	1						1							S&ME 021-86-162
SE	11865	192(1)	0	1.5	FG	1													S&ME 021-86-162
SE	11865	192(1)	2.5	4	FG	1													S&ME 021-86-162
SE	11866	193(2)	0	1.5	FG	1													S&ME 021-86-162
SE	11866	193(2)	1	5	FG			1	1								1	1	S&ME 021-86-162
SE	11866	193(2)	2.5	4	FG	1													S&ME 021-86-162
SE	11867	194(3)	0	1.5	FG	1													S&ME 021-86-162
SE	11867	194(3)	2.5	4	FG	1													S&ME 021-86-162
SE	11867	194(3)	10	11.5	FG	1													S&ME 021-86-162
NE	11868	195(5)	0.7	2	CG	1													S&ME 1221-87-288
NE	11868	195(5)	2	3.5	FG	1													S&ME 1221-87-288
NE	11868	195(5)	3.5	5	FG	1						1							S&ME 1221-87-288
NE	11869	196(7)	5	6.5	FG	1						1							S&ME 1221-87-288
NE	11869	196(7)	7.5	9	FG	1						1							S&ME 1221-87-288
NE	11869	196(7)	10	11.5	FG	1						1							S&ME 1221-87-288
SW	11874	222(4)	10	12	FG	1			1				1						S&ME 021-84-215
SW	11875	223(2)	2.5	4.5	FG	1			1			1							S&ME 021-84-215

Summary of Existing Geotechnical Laboratory Test Data
Former Plant Area

Area	FEMP ID	Other ID	Top Depth	Bot Depth	Soil Type	MC	SG	GS	AL	UW	CON	UCS	UU	CU	PERM	SP	MP	CBR	Reference
SW	11877	225(3)	4.5	6.5	FG	1							1						S&ME 021-84-215
SW	11880	228(2)	0	1.5	FG	1													S&ME 021-84-269
SW	11880	228(2)	1.5	3	FG	1			1										S&ME 021-84-269
SW	11882	230(4)	0	1.5	FG	1													S&ME 021-84-269
SW	11882	230(4)	0.5	4	FG	1		1	1				1						S&ME 021-84-269
SW	11882	230(4)	1.5	3	FG	1													S&ME 021-84-269
SW	11882	230(4)	3	4.5	FG	1													S&ME 021-84-269
NW	11883	231(5)	1.5	3	FG	1			1										S&ME 021-84-269
NW	11884	232(6)	0	1.5	FG	1													S&ME 021-84-269
NW	11884	232(6)	1.5	3	FG	1													S&ME 021-84-269
NW	11885	233(7)	0	1.5	FG	1													S&ME 021-84-269
NW	11885	233(7)	0.5	4	FG			1	1							1			S&ME 021-84-269
NW	11885	233(7)	1.5	3	FG	1													S&ME 021-84-269
NW	11885	233(7)	3	4.5	FG	1													S&ME 021-84-269
NW	11886	234(8)	0	1.5	FG	1													S&ME 021-84-269
NW	11886	234(8)	1.5	3	FG	1													S&ME 021-84-269
NW	11888	136(10)	1.5	3	FG	1													S&ME 021-84-269
SW	11902	**250(1)**																	S&ME 021-86-169
SW	11903	**251(2)**																	S&ME 021-86-169
SW	11904	**252(3)**																	S&ME 021-86-169
SW	11905	**253(4)**																	S&ME 021-86-169
SW	11906	**254(5)**																	S&ME 021-86-169
SW	11916	261(7)	5	6.5	FG	1													ATEC 22-23071
SW	11916	261(7)	7.5	9	FG	1													ATEC 22-23071
SW	11916	261(7)	10	11.5	FG	1													ATEC 22-23071
SW	11916	261(7)	13.5	15	FG	1													ATEC 22-23071
SW	11916	261(7)	18.5	20	FG	1													ATEC 22-23071
SW	11916	261(7)	23.5	25	FG	1													ATEC 22-23071
SE	11934	279(B1)	3	5	FG	1						1							S&ME 4144-88-119
SE	11935	280(B2)	7.5	9	FG	1													S&ME 4144-88-119
SE	11935	280(B2)	10	11.5	FG	1													S&ME 4144-88-119
SE	11935	280(B2)	13.5	15	FG	1													S&ME 4144-88-119
SE	11935	280(B2)	18.5	20	FG	1													S&ME 4144-88-119
SE	11935	280(B2)	23.5	25	CG	1													S&ME 4144-88-119
SE	11935	280(B2)	28.5	30	CG	1													S&ME 4144-88-119
SE	11935	280(B2)	33.5	35	CG	1													S&ME 4144-88-119
SE	11936	281(B3)	3	5	FG	1		1	1			1							S&ME 4144-88-119
NE	11938	283(1)	5	6.5	FG	1													NUTTING S-1143
NE	11938	283(1)	7.5	9	FG	1													NUTTING S-1143
NE	11938	283(1)	10	11.5	FG	1			1										NUTTING S-1143

295

2569

296

Summary of Existing Geotechnical Laboratory Test Data
Former Plant Area

Area	FEMP ID	Other ID	Top Depth	Bot Depth	Soil Type	MC	SG	GS	AL	UW	CON	UCS	UU	CU	PERM	SP	MP	CBR	Reference
NE	11938	283(1)	12.5	14	FG	1													NUTTING S-1143
NE	11938	283(1)	15	16.5	FG	1													NUTTING S-1143
NE	11938	283(1)	18.5	20	FG	1													NUTTING S-1143
NE	11939	284(2)	4.5	6	FG	1													NUTTING S-1143
NE	11939	284(2)	9.5	11	FG	1													NUTTING S-1143
NE	11939	284(2)	17	18.5	FG	1													NUTTING S-1143
NE	11940	285(3)	5	6.5	FG	1													NUTTING S-1143
NE	11940	285(3)	7.5	9	FG	1													NUTTING S-1143
NE	11940	285(3)	10	11.5	FG	1													NUTTING S-1143
NE	11940	285(3)	12.5	14	FG	1													NUTTING S-1143
NE	11940	285(3)	18.5	20	FG	1													NUTTING S-1143
NE	11941	286(4)	3.5	5	FG	1													NUTTING S-1143
NE	11941	286(4)	9.5	11	FG	1													NUTTING S-1143
NE	11941	286(4)	12	14	FG	1			1		1	1							NUTTING S-1143
NE	11941	286(4)	18.5	20	FG	1													NUTTING S-1143
NE	11942	287(5)	7	7.5	FG	1													NUTTING S-1143
NE	11942	287(5)	9.5	11	FG	1													NUTTING S-1143
NE	11942	287(5)	14.5	16	FG	1													NUTTING S-1143
NE	11942	287(5)	23.5	25	FG	1													NUTTING S-1143
NE	11943	288(6)	5	6.5	FG	1													NUTTING S-1143
NE	11943	288(6)	7.5	9	FG	1													NUTTING S-1143
NE	11943	288(6)	10	11.5	FG	1													NUTTING S-1143
NE	11943	288(6)	12.5	14	FG	1													NUTTING S-1143
NE	11943	288(6)	15	16.5	FG	1													NUTTING S-1143
NE	11944	289(7)	1.5	3	FG	1													NUTTING S-1143
NE	11944	289(7)	5	6.5	FG	1													NUTTING S-1143
NE	11944	289(7)	7.5	8.5	FG	1			1			1							NUTTING S-1143
NE	11944	289(7)	16	16.5	FG	1													NUTTING S-1143
NE	11945	290(8)	4.5	6	FG	1													NUTTING S-1143
NE	11945	290(8)	9.5	11	FG/CG	1													NUTTING S-1143
NE	11945	290(8)	18.5	20	FG	1													NUTTING S-1143
SW	11946	291(9)	4.5	6	FG	1													NUTTING S-1143
SW	11946	291(9)	7	9	FG	1						1							NUTTING S-1143
SW	11946	291(9)	9	10.5	FG	1													NUTTING S-1143
SW	11946	291(9)	12	13.5	FG/CG	1													NUTTING S-1143
SW	11946	291(9)	18.5	20	FG	1													NUTTING S-1143
SW	11947	292(10)	2	3.5	FG	1													NUTTING S-1143
SW	11947	292(10)	4.5	6	FG/CG	1													NUTTING S-1143
SW	11947	292(10)	7	8.5	FG/CG	1													NUTTING S-1143
SW	11947	292(10)	12	13.5	FG/CG	1													NUTTING S-1143

Summary of Existing Geotechnical Laboratory Test Data
Former Plant Area

Area	FEMP ID	Other ID	Top Depth	Bot Depth	Soil Type	MC	SG	GS	AL	UW	CON	UCS	UU	CU	PERM	SP	MP	CBR	Reference
SW	11947	292(10)	14.5	16	FG	1													NUTTING S-1143
SW	11948	293(11)	6.5	8	FG	1													NUTTING S-1143
SW	11948	293(11)	9.5	11.5	FG	1			1			1							NUTTING S-1143
SW	11949	294(12)	2.5	3.5	FG	1													NUTTING S-1143
SW	11949	294(12)	4.5	6	FG	1													NUTTING S-1143
SW	11949	294(12)	18.5	20	FG	1													NUTTING S-1143
SW	11950	295(C-1)	6	7.5	FG	1													ATEC 22-831858
SW	11950	295(C-1)	8.5	10	FG	1													ATEC 22-831858
SW	11950	295(C-1)	11	12.5	FG/CG	1													ATEC 22-831858
SW	11950	295(C-1)	13.5	15	FG/CG	1													ATEC 22-831858
SW	11950	295(C-1)	18.5	20	FG/CG	1													ATEC 22-831858
SW	11950	295(C-1)	23.5	25	FG	1													ATEC 22-831858
SW	11950	295(C-1)	28.5	30	CG	1													ATEC 22-831858
SW	11950	295(C-1)	33.5	35	CG	1													ATEC 22-831858
SW	11951	296(C-2)	1.5	3	FG	1													ATEC 22-831858
SW	11951	296(C-2)	6	7.5	FG	1													ATEC 22-831858
SW	11951	296(C-2)	8.5	10	FG	1			1										ATEC 22-831858
SW	11951	296(C-2)	11	12.5	FG	1													ATEC 22-831858
SW	11951	296(C-2)	13.5	15	CG	1													ATEC 22-831858
SW	11951	296(C-2)	18.5	20	CG	1													ATEC 22-831858
SW	11951	296(C-2)	23.5	25	CG	1													ATEC 22-831858
SW	11951	296(C-2)	28.5	30	CG	1													ATEC 22-831858
SW	11951	296(C-2)	33.5	35	CG	1													ATEC 22-831858
SW	11952	297(C-3)	1.5	3	FG	1													ATEC 22-831858
SW	11952	297(C-3)	6	7.5	FG	1						1							ATEC 22-831858
SW	11952	297(C-3)	8.5	10	FG/CG	1						1							ATEC 22-831858
SW	11952	297(C-3)	11	12.5	FG	1						1							ATEC 22-831858
SW	11952	297(C-3)	13.5	15	CG	1													ATEC 22-831858
SW	11952	297(C-3)	18.5	20	FG	1			1			1							ATEC 22-831858
SW	11952	297(C-3)	23.5	25	FG	1						1							ATEC 22-831858
SW	11952	297(C-3)	28.5	30	CG	1													ATEC 22-831858
SW	11952	297(C-3)	33.5	35	CG	1													ATEC 22-831858
SW	11954	299(C-5)	6	7.5	CG	1													ATEC 22-831858
SW	11954	299(C-5)	8.5	10	CG	1													ATEC 22-831858
SW	11954	299(C-5)	11	12.5	CG	1													ATEC 22-831858
SW	11954	299(C-5)	13.5	15	CG	1													ATEC 22-831858
SW	11954	299(C-5)	18.5	20	CG	1													ATEC 22-831858
SW	11954	299(C-5)	23.5	25	FG/CG	1													ATEC 22-831858
SW	11954	299(C-5)	28.5	30	CG	1													ATEC 22-831858
SW	11954	299(C-5)	33.5	35	CG	1													ATEC 22-831858

297

256

298

Summary of Existing Geotechnical Laboratory Test Data
Former Plant Area

Area	FEMP ID	Other ID	Top Depth	Bot Depth	Soil Type	MC	SG	GS	AL	UW	CON	UCS	UU	CU	PERM	SP	MP	CBR	Reference
SW	11955	300(C-6)	1.5	3	FG	1													ATEC 22-831858
SW	11955	300(C-6)	6	7.5	CG	1													ATEC 22-831858
SW	11955	300(C-6)	8.5	10	CG	1													ATEC 22-831858
SW	11955	300(C-6)	11	12.5	CG	1													ATEC 22-831858
SW	11955	300(C-6)	13.5	15	CG	1													ATEC 22-831858
SW	11955	300(C-6)	18.5	20	FG	1													ATEC 22-831858
SW	11955	300(C-6)	23.5	25	FG	1													ATEC 22-831858
SW	11955	300(C-6)	28.5	30	CG	1													ATEC 22-831858
SW	11955	300(C-6)	33.5	35	CG	1													ATEC 22-831858
SW	11956	301(C-7)	6	7.5	FG	1													ATEC 22-831858
SW	11956	301(C-7)	8.5	10	FG	1			1										ATEC 22-831858
SW	11956	301(C-7)	11	12.5	FG	1													ATEC 22-831858
SW	11956	301(C-7)	13.5	15	FG	1													ATEC 22-831858
SW	11956	301(C-7)	18.5	20	FG	1													ATEC 22-831858
SW	11956	301(C-7)	23.5	25	FG/CG	1													ATEC 22-831858
SW	11956	301(C-7)	28.5	30	CG	1													ATEC 22-831858
SW	11956	301(C-7)	33.5	35	CG	1													ATEC 22-831858
SW	11957	302(C-8)	6	7.5	FG	1													ATEC 22-831858
SW	11957	302(C-8)	8.5	10	FG	1													ATEC 22-831858
SW	11957	302(C-8)	11	12.5	FG	1			1										ATEC 22-831858
SW	11957	302(C-8)	13.5	15	CG	1													ATEC 22-831858
SW	11957	302(C-8)	18.5	20	FG	1													ATEC 22-831858
SW	11957	302(C-8)	23.5	25	FG/CG	1													ATEC 22-831858
SW	11957	302(C-8)	28.5	30	CG	1													ATEC 22-831858
SW	11957	302(C-8)	33.5	35	CG	1													ATEC 22-831858
NE	11963	201(2)	0.5	2		1													S&ME 1221-87-160-2.0
NE	11963	201(2)	3	4.5	FG	1		1	1								1	1	S&ME 1221-87-160-2.0
NE	11963	201(2)	4	6.5	FG	1													S&ME 1221-87-160-2.0
NE	11963	201(2)	10	11.5	FG	1													S&ME 1221-87-160-2.0
NE	11963	201(2)	13.5	15	FG	1													S&ME 1221-87-160-2.0
NE	11966	204(9)	3	4.5	FG	1													S&ME 1221-87-160-1.0
NE	11967	205(10)	3	4.5	FG	1			1										S&ME 1221-87-160-1.0
NE	11967	205(10)	3	8	FG			1	1								1	1	S&ME 1221-87-160-1.0
NE	11968	206(7)	3	4.5	FG	1			1										S&ME 1221-87-160-1.0
NE	11969	207(8)	3	4.5	FG	1													S&ME 1221-87-160-1.0
NE	11970	208(6)	3	4.5	FG	1													S&ME 1221-87-160-1.0
NE	11971	209(3)	3	4.5	FG	1													S&ME 1221-87-160-1.0
NE	11971	209(3)	5	6.5	FG	1			1										S&ME 1221-87-160-1.0
NE	11971	209(3)	7.5	9	FG	1													S&ME 1221-87-160-1.0
NE	11971	209(3)	10	11.5	FG	1													S&ME 1221-87-160-1.0

Summary of Existing Geotechnical Laboratory Test Data
Former Plant Area

Area	FEMP ID	Other ID	Top Depth	Bot Depth	Soil Type	MC	SG	GS	AL	UW	CON	UCS	UU	CU	PERM	SP	MP	CBR	Reference
NE	11971	209(3)	12.5	15	FG	1													S&ME 1221-87-160-1.0
NE	11971	209(3)	18.5	20	FG	1													S&ME 1221-87-160-1.0
NE	11971	209(3)	23.5	25	FG	1													S&ME 1221-87-160-1.0
NE	11972	210(4)	3	4.5	FG	1													S&ME 1221-87-160-1.0
NE	11972	210(4)	5	6.5	FG	1													S&ME 1221-87-160-1.0
NE	11972	210(4)	7.5	9	FG	1													S&ME 1221-87-160-1.0
NE	11975	213(5)	3	4.5	FG	1													S&ME 1221-87-160-1.0
NE	11976	214(1)	3	4.5	FG	1													S&ME 1221-87-160-1.0
NE	11976	214(1)	5	6	FG	1													S&ME 1221-87-160-1.0
NE	11976	214(1)	7.5	9	FG	1													S&ME 1221-87-160-1.0
NE	11977	215(2)	3	5	FG	1	1	1			1	1							S&ME 1221-87-160-1.0
NE	11977	215(2)	5	6.5	FG	1													S&ME 1221-87-160-1.0
NE	11977	215(2)	7.5	9	FG	1		1	1			1							S&ME 1221-87-160-1.0
NE	11979	217(2)	3	5	FG	1			1			1							S&ME 1221-87-159
NE	11980	218(1)	0	1.5	FG	1													S&ME 1221-87-159
NE	11980	218(1)	2.5	4	FG	1						1							S&ME 1221-87-159
NE	11980	218(1)	5	6.5	FG	1													S&ME 1221-87-159
NE	11980	218(1)	7.5	9	FG	1													S&ME 1221-87-159
NE	11980	218(1)	10	11.5	FG	1													S&ME 1221-87-159
SW	11982	220(5)	12.5	14.5	FG/CG	1							1						S&ME 021-84-215
NW	12009	(1)	1		FG	1													USACOE 1952
NW	12009	(1)	3		FG	1													USACOE 1952
NW	12009	(1)	5		FG	1													USACOE 1952
NW	12009	(1)	7		FG	1													USACOE 1952
NW	12009	(1)	9		FG	1													USACOE 1952
NW	12009	(1)	11		FG	1													USACOE 1952
NW	12009	(1)	15		FG	1													USACOE 1952
NW	12009	(1)	19		FG	1													USACOE 1952
NW	12009	(1)	25		FG	1													USACOE 1952
NW	12009	(1)	30		FG	1													USACOE 1952
NW	12009	(1)	34		CG	1													USACOE 1952
NW	12009	(1)	40		CG	1													USACOE 1952
NW	12009	(1)	44		CG	1													USACOE 1952
NW	12009	(1)	47		CG	1													USACOE 1952
NW	12009	(1)	50		CG	1													USACOE 1952
NW	12009	(1)	55		CG	1													USACOE 1952
NW	12009	(1)	60		CG	1													USACOE 1952
NW	12009	(1)	65		CG	1													USACOE 1952
NW	12009	(1)	70		CG	1													USACOE 1952
NW	12009	(1)	75		CG	1													USACOE 1952

299

756

360

Summary of Existing Geotechnical Laboratory Test Data
Former Plant Area

Area	FEMP ID	Other ID	Top Depth	Bot Depth	Soil Type	MC	SG	GS	AL	UW	CON	UCS	UU	CU	PERM	SP	MP	CBR	Reference
NW	12009	(1)	79		CG	1													USACOE 1952
NW	12010	(2)	1		FG	1													USACOE 1952
NW	12010	(2)	3	4	FG	1		1	1										USACOE 1952
NW	12010	(2)	5		FG	1													USACOE 1952
NW	12010	(2)	7		FG	1													USACOE 1952
NW	12010	(2)	9		FG	1													USACOE 1952
NW	12010	(2)	10	12	FG	1		1	1										USACOE 1952
NW	12010	(2)	15		FG	1													USACOE 1952
NW	12010	(2)	20		FG	1													USACOE 1952
NW	12010	(2)	25		FG	1													USACOE 1952
NW	12010	(2)	27	33	FG	1		1	1										USACOE 1952
NW	12010	(2)	35		FG	1													USACOE 1952
NW	12010	(2)	39		FG	1													USACOE 1952
NW	12010	(2)	42	47	CG	1		1	1										USACOE 1952
NW	12010	(2)	49		CG	1													USACOE 1952
NE	12011	(3)	1.5		FG	1													USACOE 1952
NE	12011	(3)	2	4	FG	1		1	1										USACOE 1952
NE	12011	(3)	5		FG	1													USACOE 1952
NE	12011	(3)	7		FG	1													USACOE 1952
NE	12011	(3)	9		FG	1													USACOE 1952
NE	12011	(3)	11		FG	1													USACOE 1952
NE	12011	(3)	12	17	FG	1		1	1										USACOE 1952
NE	12011	(3)	20		FG	1													USACOE 1952
NE	12011	(3)	25		FG	1													USACOE 1952
NE	12011	(3)	30		FG	1													USACOE 1952
NE	12011	(3)	35		FG	1													USACOE 1952
NE	12011	(3)	37	41	FG	1		1	1										USACOE 1952
NE	12011	(3)	41	46	CG	1		1	1										USACOE 1952
NE	12011	(3)	48		CG	1													USACOE 1952
NE	12012	(4)	3		FG	1													USACOE 1952
NE	12012	(4)	5		FG	1													USACOE 1952
NE	12012	(4)	7		FG	1													USACOE 1952
NE	12012	(4)	9		FG	1													USACOE 1952
NE	12012	(4)	10		FG	1													USACOE 1952
NE	12012	(4)	15		FG	1													USACOE 1952
NE	12012	(4)	20		FG	2													USACOE 1952
NE	12012	(4)	25		FG	1													USACOE 1952
NE	12012	(4)	30		FG	2													USACOE 1952
NE	12012	(4)	35		FG	1													USACOE 1952
NE	12012	(4)	40		CG	2													USACOE 1952

Summary of Existing Geotechnical Laboratory Test Data
Former Plant Area

Area	FEMP ID	Other ID	Top Depth	Bot Depth	Soil Type	MC	SG	GS	AL	UW	CON	UCS	UU	CU	PERM	SP	MP	CBR	Reference
NE	12012	(4)	44		CG	1													USACOE 1952
NE	12012	(4)	50		CG	1													USACOE 1952
NE	12012	(4)	55		CG	1													USACOE 1952
NE	12012	(4)	60		CG	1													USACOE 1952
NE	12012	(4)	65		CG	1													USACOE 1952
NE	12012	(4)	70		CG	1													USACOE 1952
NE	12012	(4)	80		CG	1													USACOE 1952
NW	12013	(5)	1		FG	1													USACOE 1952
NW	12013	(5)	3		FG	1													USACOE 1952
NW	12013	(5)	5		FG	1													USACOE 1952
NW	12013	(5)	7		FG	1													USACOE 1952
NW	12013	(5)	9		FG	1													USACOE 1952
NW	12013	(5)	11		FG	1													USACOE 1952
NW	12013	(5)	15		FG	1													USACOE 1952
NW	12013	(5)	18.5		FG	1													USACOE 1952
NW	12013	(5)	25		FG	1													USACOE 1952
NW	12013	(5)	29.5		FG	1													USACOE 1952
NW	12013	(5)	34.5		FG	1													USACOE 1952
NW	12013	(5)	38		CG	1													USACOE 1952
NW	12013	(5)	42.5		CG	1													USACOE 1952
NW	12013	(5)	47.5		CG	1													USACOE 1952
NW	12014	(6)	1.5		FG	1													USACOE 1952
NW	12014	(6)	3		FG	1													USACOE 1952
NW	12014	(6)	5		FG	1													USACOE 1952
NW	12014	(6)	7		FG	1													USACOE 1952
NW	12014	(6)	9		FG	1													USACOE 1952
NW	12014	(6)	11		FG	1													USACOE 1952
NW	12014	(6)	15		FG	1													USACOE 1952
NW	12014	(6)	19.5		FG	1													USACOE 1952
NW	12014	(6)	24.5		FG	1													USACOE 1952
NW	12014	(6)	30		FG	1													USACOE 1952
NW	12014	(6)	35		FG	1													USACOE 1952
NW	12014	(6)	38.5		FG	1													USACOE 1952
NW	12014	(6)	42		CG	1													USACOE 1952
NW	12014	(6)	46		CG	1													USACOE 1952
NW	12014	(6)	49		CG	1													USACOE 1952
NE	12015	(7)	1.5		FG	1													USACOE 1952
NE	12015	(7)	3.5		FG	1													USACOE 1952
NE	12015	(7)	4	6	FG	1		1											USACOE 1952
NE	12015	(7)	7		FG	1													USACOE 1952

301

256

302

Summary of Existing Geotechnical Laboratory Test Data
Former Plant Area

Area	FEMP ID	Other ID	Top Depth	Bot Depth	Soil Type	MC	SG	GS	AL	UW	CON	UCS	UU	CU	PERM	SP	MP	CBR	Reference
NE	12015	(7)	9		FG	1													USACOE 1952
NE	12015	(7)	11		FG	1													USACOE 1952
NE	12015	(7)	15		FG	1													USACOE 1952
NE	12015	(7)	18	20	CG	1		1											USACOE 1952
NE	12015	(7)	20	25	FG	1		1											USACOE 1952
NE	12015	(7)	28		FG	1													USACOE 1952
SW	12016	(9)	2		FG	1													USACOE 1952
SW	12016	(9)	4		FG	1													USACOE 1952
SW	12016	(9)	6.8		FG	1													USACOE 1952
SW	12016	(9)	8		FG	1													USACOE 1952
SW	12016	(9)	11.5		CG	1													USACOE 1952
SW	12016	(9)	15		FG	1													USACOE 1952
SW	12016	(9)	17		CG	1													USACOE 1952
SW	12016	(9)	24		FG	1													USACOE 1952
SW	12016	(9)	29		FG	1													USACOE 1952
SW	12016	(9)	34		CG	1													USACOE 1952
SW	12016	(9)	36.5		CG	1													USACOE 1952
SW	12017	(10)	2		FG	1													USACOE 1952
SW	12017	(10)	4		FG	1													USACOE 1952
SW	12017	(10)	6		FG	1													USACOE 1952
SW	12017	(10)	8		FG	1													USACOE 1952
SW	12017	(10)	10		FG	1													USACOE 1952
SW	12017	(10)	11.5		FG	1													USACOE 1952
SW	12017	(10)	12.8		FG	1													USACOE 1952
SW	12017	(10)	13.2		CG	1													USACOE 1952
SW	12017	(10)	14.5		FG	1													USACOE 1952
SW	12017	(10)	17		FG	1													USACOE 1952
SW	12017	(10)	25		FG	1													USACOE 1952
SW	12017	(10)	27.5		FG	1													USACOE 1952
SW	12017	(10)	30		CG	1													USACOE 1952
SW	12017	(10)	35		CG	1													USACOE 1952
SW	12017	(10)	40		CG	1													USACOE 1952
SW	12017	(10)	45		CG	1													USACOE 1952
SW	12017	(10)	49.8		CG	1													USACOE 1952
SE	12018	(11)	3		FG	1													USACOE 1952
SE	12018	(11)	5		FG	1													USACOE 1952
SE	12018	(11)	7		FG	1													USACOE 1952
SE	12018	(11)	9		FG	1													USACOE 1952
SE	12018	(11)	11		FG	1													USACOE 1952
SE	12018	(11)	13		FG	1													USACOE 1952

Summary of Existing Geotechnical Laboratory Test Data
Former Plant Area

Area	FEMP ID	Other ID	Top Depth	Bot Depth	Soil Type	MC	SG	GS	AL	UW	CON	UCS	UU	CU	PERM	SP	MP	CBR	Reference
SE	12018	(11)	18		FG	1													USACOE 1952
SE	12018	(11)	23		FG	1													USACOE 1952
SE	12018	(11)	28		FG	1													USACOE 1952
SE	12018	(11)	31.5		CG	1													USACOE 1952
SE	12018	(11)	36		CG	1													USACOE 1952
SE	12018	(11)	41		CG	1													USACOE 1952
SE	12019	(12)	3		FG	1													USACOE 1952
SE	12019	(12)	5		FG	1		1	1										USACOE 1952
SE	12019	(12)	7		FG	1													USACOE 1952
SE	12019	(12)	9		FG	1													USACOE 1952
SE	12019	(12)	11		FG	1													USACOE 1952
SE	12019	(12)	14		FG	1		1	1										USACOE 1952
SE	12019	(12)	19		FG	1		1	1										USACOE 1952
SE	12019	(12)	24		FG	1													USACOE 1952
SE	12019	(12)	29		FG	1													USACOE 1952
SE	12019	(12)	34		CG	1		1	1										USACOE 1952
SE	12019	(12)	39		CG	1													USACOE 1952
SE	12019	(12)	45		CG	1													USACOE 1952
SE	12019	(12)	49		CG	1													USACOE 1952
SW	12020	(13)	3		FG	1		1	1										USACOE 1952
SW	12020	(13)	5		FG	1													USACOE 1952
SW	12020	(13)	7		FG	1		1	1										USACOE 1952
SW	12020	(13)	9		FG	1													USACOE 1952
SW	12020	(13)	11		FG	1		1	1										USACOE 1952
SW	12020	(13)	13.5		FG	1		1	1										USACOE 1952
SW	12020	(13)	15		CG	1													USACOE 1952
SW	12020	(13)	20		FG	1		1	1										USACOE 1952
SW	12020	(13)	24		CG	1													USACOE 1952
SW	12020	(13)	27		FG	1													USACOE 1952
SW	12020	(13)	30		CG	1		1	1										USACOE 1952
SW	12020	(13)	34		CG	1													USACOE 1952
SW	12020	(13)	36		CG	1													USACOE 1952
SW	12020	(13)	40		CG	1		1	1										USACOE 1952
SW	12020	(13)	45		CG	1													USACOE 1952
SW	12020	(13)	49		CG	1													USACOE 1952
SW	12021	(14)	2.5		FG	1													USACOE 1952
SW	12021	(14)	4.5		FG	1													USACOE 1952
SW	12021	(14)	7		FG	1													USACOE 1952
SW	12021	(14)	9		FG	1													USACOE 1952
SW	12021	(14)	9.8		FG	1													USACOE 1952

304

Summary of Existing Geotechnical Laboratory Test Data
Former Plant Area

Area	FEMP ID	Other ID	Top Depth	Bot Depth	Soil Type	MC	SG	GS	AL	UW	CON	UCS	UU	CU	PERM	SP	MP	CBR	Reference
SW	12021	(14)	12		FG	1													USACOE 1952
SW	12021	(14)	16		FG	1													USACOE 1952
SW	12021	(14)	20		FG	1													USACOE 1952
SW	12021	(14)	21		CG	1													USACOE 1952
SW	12021	(14)	24		CG	1													USACOE 1952
SW	12021	(14)	27		CG	1													USACOE 1952
SW	12021	(14)	29.5		CG	1													USACOE 1952
SW	12021	(14)	32		CG	1													USACOE 1952
SW	12021	(14)	34.8		CG	1													USACOE 1952
SW	12021	(14)	40		CG	1													USACOE 1952
SW	12021	(14)	43		CG	1													USACOE 1952
SW	12021	(14)	45		CG	1													USACOE 1952
SW	12021	(14)	49		CG	1													USACOE 1952
SE	12022	(15)	3		FG	1													USACOE 1952
SE	12022	(15)	5		FG	1													USACOE 1952
SE	12022	(15)	6.5		FG	1													USACOE 1952
SE	12022	(15)	8		FG	1													USACOE 1952
SE	12022	(15)	9.5		CG	1													USACOE 1952
SE	12022	(15)	11		FG	1													USACOE 1952
SE	12022	(15)	13.5		FG	1													USACOE 1952
SE	12022	(15)	19		FG	1													USACOE 1952
SE	12022	(15)	19.8		CG	1													USACOE 1952
SE	12022	(15)	22		FG	1													USACOE 1952
SE	12022	(15)	25		CG	1													USACOE 1952
SE	12022	(15)	30		CG	1													USACOE 1952
SE	12022	(15)	35		CG	1													USACOE 1952
SE	12022	(15)	40		CG	1													USACOE 1952
SE	12022	(15)	45		CG	1													USACOE 1952
SE	12022	(15)	49		CG	1													USACOE 1952
SE	12023	(16)	1		FG	1		1	1										USACOE 1952
SE	12023	(16)	3		FG	1													USACOE 1952
SE	12023	(16)	5		FG	1													USACOE 1952
SE	12023	(16)	7.5		FG	1		1	1										USACOE 1952
SE	12023	(16)	9		FG	1													USACOE 1952
SE	12023	(16)	11		FG	1													USACOE 1952
SE	12023	(16)	12.5		FG	1													USACOE 1952
SE	12023	(16)	14.5		CG	1													USACOE 1952
SE	12023	(16)	21		FG	1		1	1										USACOE 1952
SE	12023	(16)	25		CG	1		1	1										USACOE 1952
SE	12023	(16)	30		CG	1		1	1										USACOE 1952

Summary of Existing Geotechnical Laboratory Test Data
Former Plant Area

Area	FEMP ID	Other ID	Top Depth	Bot Depth	Soil Type	MC	SG	GS	AL	UW	CON	UCS	UU	CU	PERM	SP	MP	CBR	Reference
SE	12023	(16)	35		CG	1													USACOE 1952
SE	12023	(16)	40		CG	1													USACOE 1952
SE	12023	(16)	45		CG	1													USACOE 1952
SE	12023	(16)	49		CG	1													USACOE 1952
SW	12024	(17)	2.5		FG	1													USACOE 1952
SW	12024	(17)	5		FG	1		1											USACOE 1952
SW	12024	(17)	7		FG	1													USACOE 1952
SW	12024	(17)	9		FG	1													USACOE 1952
SW	12024	(17)	9.5	10	CG	1		1											USACOE 1952
SW	12024	(17)	15		FG	1		1	1										USACOE 1952
SW	12024	(17)	19		FG	1		1	1										USACOE 1952
SW	12024	(17)	21.5		FG	1													USACOE 1952
SW	12024	(17)	24		CG	1													USACOE 1952
SW	12024	(17)	25		CG	1													USACOE 1952
SW	12024	(17)	29		CG	1		1	1										USACOE 1952
SW	12024	(17)	31		CG	1													USACOE 1952
SW	12024	(17)	35		CG	1		1	1										USACOE 1952
SW	12024	(17)	38		CG	1													USACOE 1952
SW	12024	(17)	40		CG	1													USACOE 1952
SW	12024	(17)	43		CG	1													USACOE 1952
SW	12024	(17)	45		CG	1													USACOE 1952
SW	12024	(17)	49		CG	1													USACOE 1952
SW	12024	(17)	54		CG	1													USACOE 1952
SW	12024	(17)	56		CG	1													USACOE 1952
SW	12024	(17)	58		CG	1													USACOE 1952
SW	12024	(17)	60		CG	1													USACOE 1952
SW	12024	(17)	65		CG	1													USACOE 1952
SW	12024	(17)	70		CG	1													USACOE 1952
SW	12024	(17)	75		CG	1													USACOE 1952
SW	12024	(17)	78.5		CG	1													USACOE 1952
SW	12024	(17)	80		CG	1													USACOE 1952
SW	12025	(18)	3		FG	1													USACOE 1952
SW	12025	(18)	5		FG	1		1	1										USACOE 1952
SW	12025	(18)	7		FG	1													USACOE 1952
SW	12025	(18)	9		FG	1		1	1										USACOE 1952
SW	12025	(18)	11		FG	1													USACOE 1952
SW	12025	(18)	15		FG	1													USACOE 1952
SW	12025	(18)	20		FG	1		1	1										USACOE 1952
SW	12025	(18)	22		CG	1													USACOE 1952
SW	12025	(18)	25		CG	1													USACOE 1952

305

759

306

Summary of Existing Geotechnical Laboratory Test Data
Former Plant Area

Area	FEMP ID	Other ID	Top Depth	Bot Depth	Soil Type	MC	SG	GS	AL	UW	CON	UCS	UU	CU	PERM	SP	MP	CBR	Reference
SW	12025	(18)	27		CG	1													USACOE 1952
SW	12025	(18)	30		CG	1													USACOE 1952
SW	12025	(18)	33		CG	1													USACOE 1952
SW	12025	(18)	35		CG	1		1	1										USACOE 1952
SW	12025	(18)	38		CG	1		1	1										USACOE 1952
SW	12025	(18)	40		CG	1													USACOE 1952
SW	12025	(18)	43		CG	1													USACOE 1952
SW	12025	(18)	45		CG	1		1	1										USACOE 1952
SW	12025	(18)	48		CG	1													USACOE 1952
SW	12025	(18)	50		CG	1													USACOE 1952
SE	12026	(19)	3		FG	1		1	1										USACOE 1952
SE	12026	(19)	5		FG	1													USACOE 1952
SE	12026	(19)	7		FG	1													USACOE 1952
SE	12026	(19)	11		FG	1													USACOE 1952
SE	12026	(19)	15		FG	1		1	1										USACOE 1952
SE	12026	(19)	20		FG	1													USACOE 1952
SE	12026	(19)	23		FG	1		1	1										USACOE 1952
SE	12026	(19)	27		CG	1													USACOE 1952
SE	12026	(19)	30		CG	1													USACOE 1952
SE	12026	(19)	30.5	34.2	CG	1		1	1										USACOE 1952
SE	12026	(19)	35		CG	1													USACOE 1952
SE	12026	(19)	39		CG	1		1	1										USACOE 1952
SE	12026	(19)	42		CG	1													USACOE 1952
SE	12026	(19)	49		CG	1													USACOE 1952
SE	12027	(20)	2		FG	1		1	1										USACOE 1952
SE	12027	(20)	4		FG	1													USACOE 1952
SE	12027	(20)	6		FG	1													USACOE 1952
SE	12027	(20)	8		FG	1		1	1										USACOE 1952
SE	12027	(20)	9.5		FG	1													USACOE 1952
SE	12027	(20)	11.3		FG	1													USACOE 1952
SE	12027	(20)	15		FG	1		1	1										USACOE 1952
SE	12027	(20)	20		FG	1													USACOE 1952
SE	12027	(20)	22		FG	1		1	1										USACOE 1952
SE	12027	(20)	25		FG	1		1	1										USACOE 1952
SE	12027	(20)	30		CG	1													USACOE 1952
SE	12027	(20)	35		CG	1													USACOE 1952
SE	12027	(20)	40		CG	1													USACOE 1952
SE	12027	(20)	43		CG	1													USACOE 1952
SE	12027	(20)	47.5		CG	1													USACOE 1952
NE	12174	CSF-1	6	8	FG	1	1	1	1				1						PARSONS PO20

Summary of Existing Geotechnical Laboratory Test Data
Former Plant Area

Area	FEMP ID	Other ID	Top Depth	Bot Depth	Soil Type	MC	SG	GS	AL	UW	CON	UCS	UU	CU	PERM	SP	MP	CBR	Reference
NE	12174	CSF-1	8	10	FG	1	1	1	1		1								PARSONS PO20
NE	12174	CSF-1	18	20		1													PARSONS PO20
NE	12174	CSF-1	23	25		1													PARSONS PO20
NE	12174	CSF-1	38	40		1													PARSONS PO20
NE	12175	CSF-2	13	15	FG	1	1	1	1		1								PARSONS PO20
NE	12176	CSF-3	4	6		1													PARSONS PO20
NE	12176	CSF-3	10	12	FG	1	1	1	1				1						PARSONS PO20
NE	12176	CSF-3	13	15		1													PARSONS PO20
NE	12176	CSF-3	23	25		1													PARSONS PO20
NE	12176	CSF-3	25	27		1					1								PARSONS PO20
NE	12177	CSF-4	13	15	FG	1	1	1	1										PARSONS PO20
NE	12178	CSF-5	2	4		1													PARSONS PO20
NE	12178	CSF-5	4	6		1													PARSONS PO20
NE	12178	CSF-5	8	10		1													PARSONS PO20
NE	12178	CSF-5	33	35		1													PARSONS PO20
NE	12178	CSF-5	38	40	FG	1	1	1	1										PARSONS PO20
NE	12179	CSF-6	20	22	FG	1	1	1	1				1						PARSONS PO20
NW		OS-3	2	4	FG	1													PARSONS PO 22
NW		OS-1	4	6	FG	1													PARSONS PO 22
NW		OS-2A	4	6	FG	1	1	1	1			1							PARSONS PO 22
NW		OS-1	6	8	FG	1	1	1	1	1		1							PARSONS PO 22
NW		OS-2A	6	8	FG	1													PARSONS PO 22
NW		OS-4	6	8	FG	1						1							PARSONS PO 22
NW		OS-1	8	10	FG	1													PARSONS PO 22
NW		OS-2A	8	10	FG	1													PARSONS PO 22
NW		OS-3	8	10	FG	1	1	1	1			1							PARSONS PO 22
NW		OS-3	13	15	FG	1													PARSONS PO 22
NW		OS-4	13	15	FG	1	1	1	1			1							PARSONS PO 22
NW		OS-4	18	20	FG	1													PARSONS PO 22
SE		PFS-1	2	4	FG	1													PARSONS PO 32
SE		PFS-1	6	8	FG	1	1	1				1							PARSONS PO 32
SE		PFS-1	8	10	FG	1													PARSONS PO 32
SE		PFS-2	6	8	FG	1													PARSONS PO 32
SE		PFS-2	8	10	FG	1	1	1				1							PARSONS PO 32
SE		PFS-2	13	15	FG	1													PARSONS PO 32
SE		PFS-3	4	6	FG	1													PARSONS PO 32
SE		PFS-3	6	8	FG	1	1	1	1			1							PARSONS PO 32
SE		PFS-3	13	15	FG	1													PARSONS PO 32
SE		PFS-4A	6	8	FG	1						1							PARSONS PO 32
SE		PFS-4A	8	10	FG	1	1	1	1			1							PARSONS PO 32

368

Summary of Existing Geotechnical Laboratory Test Data
Former Plant Area

Area	FEMP ID	Other ID	Top Depth	Bot Depth	Soil Type	MC	SG	GS	AL	UW	CON	UCS	UU	CU	PERM	SP	MP	CBR	Reference
SE		PFS-4A	13	15	FG	1													PARSONS PO 32
SE		PFS-5	2	4	FG	1													PARSONS PO 32
SE		PFS-5	4	6	FG	1													PARSONS PO 32
SE		PFS-5	6	8	FG	1	1	1	1			1							PARSONS PO 32
SE		PFS-6	4	6	FG	1													PARSONS PO 32
SE		PFS-6	8	10	FG	1	1	1	1			1							PARSONS PO 32
SE		PFS-6	18	20	FG	1													PARSONS PO 32
SW		UD-1	1.5	2.3	CG	1	1	1	1		1								USACOE 1952
SW		UD-1	2.3	3	FG	1	1	1	1		1								USACOE 1952
SW		UD-1	3.5	6	FG	1	1	1	1		1								USACOE 1952
SW		UD-1	5.5	7	FG	1	1	1	1		1								USACOE 1952
SW		UD-1	7.5	9	FG	1	1	1	1		1								USACOE 1952
SW		UD-1	9.5	11	FG	1		1	1	1									USACOE 1952
SW		UD-1	11.5	13	FG	1		1	1	1									USACOE 1952
SW		UD-1	13.6	15	FG	1		1	1	1									USACOE 1952
SW		UD-1	15.5	17	FG	1		1	1										USACOE 1952
SW		UD-1	17.5	18.5	FG	1		1	1										USACOE 1952
SW		UD-1	18.5	20	FG	1		1	1										USACOE 1952
SW		UD-1	20.5	22	FG	1		1	1										USACOE 1952
NE		UD-2	1.5	3.5	FG	1	1	1	1		1								USACOE 1952
NE		UD-2	3.5	5.5	FG	1	1	1	1		1								USACOE 1952
NE		UD-2	5.5	7.5	FG	1	1	1	1		1								USACOE 1952
NE		UD-2	9.5	11.5	FG	1													USACOE 1952
NE		UD-2	11.5	13.5	CG	1		1	1	1									USACOE 1952
NE		UD-2	13.5	15.5	CG	1													USACOE 1952
NE		UD-2	15.5	17.5	FG	1	1	1	1		1								USACOE 1952
NE		UD-2	17.5	19.5	FG	1		1	1	1									USACOE 1952
NE		UD-2	19.5	21.5	FG	1		1	1	1									USACOE 1952
NE		UD-2	21.5	23.5	FG	1		1	1	1									USACOE 1952
NE		UD-2	23.5	25.5	FG	1	1	1	1		1								USACOE 1952
NE		UD-2	25.5	27.5	FG	1		1	1	1									USACOE 1952
NE		UD-2	27.5	29.5	FG	1		1	1	1									USACOE 1952
NE		UD-2	29.5	31.5	FG	1		1	1	1									USACOE 1952
NE		UD-2	31.5	32.5	FG	1		1	1	1									USACOE 1952
NE		UD-2	32.5	34.5	FG	1		1	1	1									USACOE 1952
SW		UD-3	1.5	3.5	FG	1	1	1	1		1								USACOE 1952
SW		UD-3	3.5	5.5	FG	1	1	1	1		1								USACOE 1952
SW		UD-3	5.5	7.5	FG	1		1	1	1									USACOE 1952
SW		UD-3	7.5	9.5	FG	1		1		1									USACOE 1952
SW		UD-3	9.5	11.5	FG	1		1		1									USACOE 1952

Summary of Existing Geotechnical Laboratory Test Data
Former Plant Area

Area	FEMP ID	Other ID	Top Depth	Bot Depth	Soil Type	MC	SG	GS	AL	UW	CON	UCS	UU	CU	PERM	SP	MP	CBR	Reference
SW		UD-3	11.5	12	FG	1		1											USACOE 1952
SW		UD-3	11.5	13.5	FG				1										USACOE 1952
SW		UD-3	13	13.5	CG	1		1											USACOE 1952
SW		UD-3	13.5	15.5	FG	1	1	1			1								USACOE 1952
SW		UD-3	15.5	17.5	FG	1	1	1	1		1								USACOE 1952
SW		UD-3	17.5	19.5	FG	1		1	1	1									USACOE 1952
NE		B-1	3	5	FG	1		1	1						1				S&ME 4144-88-309
NE		B-2	2	3	FG			1	1										S&ME 4144-88-309
NE		B-2	3	5	FG	1		1	1						1				S&ME 4144-88-309
NE		B-3	3	5	FG	1									1				S&ME 4144-88-309
NE		B-4	3	5	FG	1									1				S&ME 4144-88-309
NE		B-4	10	12	FG	1									1				S&ME 4144-88-309
NE		B-6	3	5	FG	1									1				S&ME 4144-88-309
NE		B-6	10	12	FG	1									1				S&ME 4144-88-309
					TOTALS	714	49	269	158	19	26	60	11	6	7	1	12	11	

309

756

Appendix K

APPENDIX K

TEST PLAN FOR ARCHIVED SAMPLES

Appendix K
Archive Sample Test Plan

BORING NAME	SAMPLE ID	PROJECT NUMBER	SAMPLE DATE	TOP DEPTH (ft)	BOTTOM DEPTH (ft)	ESTIMATED SAMPLE VOLUME	VISUAL DESCRIPTION (1)	SAMPLING COMMENTS	ESTIMATED TESTS	
									GS	AL(4)
11115	30915A11115-08	50.03.24	15-Sep-93	6.0	6.5	250 ml	SM/SW		1	1
11115	30915A11115-10	50.03.24	15-Sep-93	7.5	8.0	200 ml	SP/SW			
11115	30915A11115-13	50.03.24	15-Sep-93	9.0	9.5	250 ml	SP/SW		1	
11115	30915A11115-14	50.03.24	15-Sep-93	9.5	10.0	300 ml	SW			
11115	30915A11115-15	50.03.24	15-Sep-93	10.0	10.5	200 ml	SP w/ Gravel			
11115	30915A11115-17	50.03.24	15-Sep-93	12.0	12.5	250 ml	SM/SP		1	1
11115	30915A11115-18	50.03.24	15-Sep-93	12.5	13.0	300 ml	SP			
11115	30915A11115-20	50.03.24	15-Sep-93	13.5	14.0	250 ml	SP/SW			
11115	30915A11115-21	50.03.24	15-Sep-93	14.0	14.5	250 ml	SM/SP			
11211	30915A11211-13	50.03.24	15-Sep-93	9.5	10.0	100 ml	SM		1	1
11211	30915A11211-16	50.03.24	15-Sep-93	11.0	11.5	200 ml	SM/SP			
11211	30915A11211-17	50.03.24	15-Sep-93	11.5	12.0	150 ml	SM/SP			
11211	30915A11211-19	50.03.24	15-Sep-93	12.5	13.0	200 ml	SM/SP			
1134	50650	50.03.01	3-May-89	11.5	12.0	150 ml	SM (From Log)		1	1
1177	51615	50.03.01	13-Aug-89	11.0	11.5	200 ml	SP/SW		2	
1177	51617	50.03.01	13-Aug-89	12.0	12.5	200 ml	SW			
1177	51618	50.03.01	13-Aug-89	12.5	13.0	200 ml	SP w/ Trace Gravel to 1"			
1177	51619	50.03.01	13-Aug-89	13.0	13.5	200 ml	SP			
1177	51620	50.03.01	13-Aug-89	13.5	14.0	200 ml	SP			
1177	51624	50.03.01	13-Aug-89	15.5	16.0	200 ml	SW-Gap Graded?		2	
1177	51625	50.03.01	13-Aug-89	16.0	16.5	200 ml	SP w/ Scattered Gravel to 1/4"			
1177	51626	50.03.01	13-Aug-89	16.5	17.0	200 ml	SP/SW			
1177	51627	50.03.01	13-Aug-89	17.0	17.5	200 ml	SW			
1177	51628	50.03.01	13-Aug-89	17.5	18.0	200 ml	SW			
1177	51629	50.03.01	13-Aug-89	18.0	18.5	200 ml	SP			
1177	51630	50.03.01	13-Aug-89	18.5	19.0	200 ml	SW			
1183	51741	50.03.01	23-Oct-89	13.0	13.5	100 ml	ML/SM		1	1
1183	51742	50.03.01	23-Oct-89	13.5	14.0	200 ml	SP			
1183	51743	50.03.01	23-Oct-89	14.0	14.5	250 ml	SM/SP			
1185	51784	50.03.01	24-Oct-89	15.5	16.0	100 ml	SM		1	1
1185	51785	50.03.01	24-Oct-89	16.0	16.5	200 ml	SM			
1185	51786	50.03.01	24-Oct-89	16.5	17.0	100 ml	SP			
1185	51787	50.03.01	24-Oct-89	17.0	17.5	250 ml	SP			

312

Appendix K
Archive Sample Test Plan

BORING NAME	SAMPLE ID	PROJECT NUMBER	SAMPLE DATE	TOP DEPTH (ft)	BOTTOM DEPTH (ft)	ESTIMATED SAMPLE VOLUME	VISUAL DESCRIPTION (1)	SAMPLING COMMENTS	ESTIMATED TESTS	
									GS	AL(4)
1186	51799	50.03.01	1-Jul-89	13.0	13.5	100 ml	SM			1
1186	51800	50.03.01	1-Jul-89	13.5	14.0	100 ml	SM/SP			
1188	51847	50.03.01	1-Feb-90	18.0	18.5	150 ml	SP		1	1
1188	51848	50.03.01	1-Feb-90	18.5	19.0	150 ml	SP/SC			
1193	51935	50.03.01	1-Dec-89	12.0	12.5	200 ml	ML/SM (From Log)			
1193	51936	50.03.01	1-Dec-89	12.5	13.0	100 ml	ML/SM (From Log)			
1193	51937	50.03.01	1-Dec-89	13.0	13.5	200 ml	ML/SM (From Log)		1	1
1193	51938	50.03.01	1-Dec-89	13.5	14.0	200 ml	ML/SM (From Log)			
1193	51939	50.03.01	1-Dec-89	14.0	14.5	200 ml	ML/SM (From Log)			
1196	16900	3.7	8-Nov-89	10.5	11.0	100 ml	ML			
1196	16901	3.7	8-Nov-89	11.0	11.5	150 ml	ML			1
1196	16902	3.7	8-Nov-89	11.5	12.0	150 ml	ML Laminated			
1196	51995	50.03.01	8-Nov-89	12.0	12.5	150 ml	ML/CL			
1196	51996	50.03.01	8-Nov-89	12.5	13.0	150 ml	ML/CL			1
1196	51997	50.03.01	8-Nov-89	13.0	13.5	150 ml	ML Laminated			
1198	52037	50.03.01	2-Jun-89	12.0	12.5	100 ml	ML w/ SC and SP			1
1198	52038	50.03.01	2-Jun-89	12.5	13.0	200 ml	ML/SM/SP			
1204	52144	50.03.01	4-Jan-90	15.5	16.0	100 ml	ML (From Log)			1
1205	52157	50.03.01	3-Jun-89	12.0	12.5	100 ml	SM (From Log)			
1205	52158	50.03.01	3-Jun-89	12.5	13.0	100 ml	SM (From Log)		1	1
1205	52159	50.03.01	3-Jun-89	13.0	13.5	100 ml	SM (From Log)			
1208	52206	50.03.01	31-May-89	16.5	17.0	250 ml	SP			
1208	52207	50.03.01	31-May-89	17.0	17.5	250 ml	SP		1	
1208	52208	50.03.01	31-May-89	17.5	18.0	250 ml	SP			1
1208	50209	50.03.01	31-May-89	18.0	18.5	100 ml	SP			
1208	50210	50.03.01	31-May-89	18.5	19.0	200 ml	SM/SP			
1210	17205	3.7	3-May-89	8.0	8.5	100 ml	ML (From Log)			1
1210	17206	3.7	3-May-89	8.5	9.0	100 ml	ML (From Log)			
1212	17250	3.7	2-Nov-89	9.5	10.0	100 ml	SM/ML			1
1212	17253	50.03.01	2-Nov-89	11.0	11.5	150 ml	SM/ML		1	
1212	52235	50.03.01	2-Nov-89	12.0	12.5	100 ml	SM/SP			1
1214	17298	3.7	14-Dec-89	11.5	12.0	100 ml	ML			1
1214	52275	50.03.01	14-Dec-89	12.0	12.5	200 ml	ML/CL			1

Appendix K
Archive Sample Test Plan

BORING NAME	SAMPLE ID	PROJECT NUMBER	SAMPLE DATE	TOP DEPTH (ft)	BOTTOM DEPTH (ft)	ESTIMATED SAMPLE VOLUME	VISUAL DESCRIPTION (1)	SAMPLING COMMENTS	ESTIMATED TESTS	
									GS	AL(4)
1214	52276	50.03.01	14-Dec-89	12.5	13.0	100 ml	ML			1
1214	52277	50.03.01	14-Dec-89	13.0	13.5	100 ml	ML			
1216	52318	50.03.01	21-Oct-89	13.5	14.0	200 ml	SC		1	1
1217	52335	50.03.01	18-Nov-89	11.0	11.5	100 ml	SM/SP (From Log)		1	1
1217	52336	50.03.01	18-Nov-89	11.5	12.0	100 ml	SM/SP (From Log)			
1220	52370	50.03.01	25-May-89	18.5	19.0	100 ml	SM/SW			1
1224	50803	50.03.01	16-May-89	16.5	17.0	250 ml	SM/SP		1	1
1224	50804	50.03.01	16-May-89	17.0	17.5	200 ml	SM			
1224	50805	50.03.01	16-May-89	17.5	18.0	200 ml	ML/SM		1	1
1224	50806	50.03.01	16-May-89	18.0	18.5	200 ml	ML/SM			
1224	50807	50.03.01	16-May-89	18.5	19.0	100 ml	SM/ML			
1225	52436	50.03.01	17-Nov-89	12.5	13.0	200 ml	ML (From Log)		1	1
1225	52437	50.03.01	17-Nov-89	13.0	13.5	200 ml	ML (From Log)			
1227	17581	3.7	12-May-89	9.0	9.5	200 ml	ML/SM		1	1
1227	17582	3.7	12-May-89	9.5	10.0	250 ml	SM/ML			
1230	50724	50.03.01	11-May-89	11.0	11.5	100 ml	ML		1	1
1230	50725	50.03.01	11-May-89	11.5	12.0	200 ml	ML/SM			
1230	50726	50.03.01	11-May-89	12.0	12.5	100 ml	ML to Very Fine SM			
1230	50727	50.03.01	11-May-89	12.5	13.0	250 ml	ML			1
1230	50728	50.03.01	11-May-89	13.0	13.5	300 ml	ML			
1230	50729	50.03.01	11-May-89	13.5	14.0	250 ml	ML			
1230	50730	50.03.01	11-May-89	14.0	14.5	250 ml	SM/SP			1
1230	50731	50.03.01	11-May-89	14.5	15.0	250 ml	ML			1
1230	50733	50.03.01	11-May-89	15.5	16.0	200 ml	ML/CL			
1230	50734	50.03.01	11-May-89	16.0	16.5	100 ml	SC		1	1
1230	50735	50.03.01	11-May-89	16.5	17.0	200 ml	SC/SP			
1230	50736	50.03.01	11-May-89	17.0	17.5	150 ml	ML			1
1230	50737	50.03.01	11-May-89	17.5	18.0	250 ml	ML/CL			
1230	50738	50.03.01	11-May-89	18.0	18.5	250 ml	ML			
1233	17713	3.7	31-May-89	9.0	9.5	150 ml	SM		1	1
1233	17714	3.7	31-May-89	9.5	10.0	150 ml	SM/ML			
1233	52536	50.03.01	31-May-89	11.5	12.0	250 ml	SP/SM		1	1
1233	52537	50.03.01	31-May-89	12.0	12.5	150 ml	ML/CL w/ Some Sand (Black)			1

3/4

Appendix K
Archive Sample Test Plan

BORING NAME	SAMPLE ID	PROJECT NUMBER	SAMPLE DATE	TOP DEPTH (ft)	BOTTOM DEPTH (ft)	ESTIMATED SAMPLE VOLUME	VISUAL DESCRIPTION (1)	SAMPLING COMMENTS	ESTIMATED TESTS	
									GS	AL(4)
1233	52538	50.03.01	31-May-89	12.5	13.0	100 ml	SP/SM			1
1233	52539	50.03.01	31-May-89	13.0	13.5	250 ml	SM			
1233	52540	50.03.01	31-May-89	13.5	14.0	200 ml	SP			
1233	52541	50.03.01	31-May-89	14.0	14.5	200 ml	SP		1	1
1233	52542	50.03.01	31-May-89	14.5	15.0	150 ml	SP/SW w/ Trace Silt			
1233	52544	50.03.01	31-May-89	15.5	16.0	200 ml	SM/SC			1
1233	52545	50.03.01	31-May-89	16.0	16.5	100 ml	SM			
1233	52546	50.03.01	31-May-89	16.5	17.0	150 ml	SP/SW w/ Trace Silt			
1233	52547	50.03.01	31-May-89	17.0	17.5	150 ml	SW		1	
1233	52548	50.03.01	31-May-89	17.5	18.0	200 ml	SM/SP w/ Gravel to 1/2"			
1233	52549	50.03.01	31-May-89	18.0	18.5	200 ml	SP		1	
1233	52550	50.03.01	31-May-89	18.5	19.0	100 ml	SP/SW			
1236	17774	3.7	14-May-89	6.5	7.0	250 ml	GC			1
1236	17776	3.7	14-May-89	7.5	8.0	150 ml	GC			
1236	17777	3.7	14-May-89	8.0	8.5	250 ml	CL w/ Sand		1	
1236	17779	3.7	14-May-89	9.0	9.5	150 ml	GC/CL			1
1236	17780	3.7	14-May-89	9.5	10.0	250 ml	GC			
1240	50695	50.03.01	10-May-89	11.0	11.5	100 ml	SM/ML (From Log)			1
1240	50696	50.03.01	10-May-89	11.5	12.0	100 ml	SM/ML (From Log)			
1242	50690	50.03.01	10-May-89	12.5	13.0	100 ml	SM/ML (From Log)			1
1242	50691	50.03.01	10-May-89	13.0	13.5	100 ml	SM/ML (From Log)			
1244	50654	50.03.01	8-May-89	12.5	13.0	200 ml	SM/ML Very Silty w/ Sand		1	1
1244	50655	50.03.01	8-May-89	13.0	13.5	300 ml	SM/ML Very Fine Sand and Silt			
1245	52598	50.03.01	10-Oct-89	12.5	13.0	200 ml	SM/ML (From Log)			
1245	52599	50.03.01	10-Oct-89	13.0	13.5	200 ml	SM/ML (From Log)			
1245	52600	50.03.01	10-Oct-89	13.5	14.0	100 ml	SM/ML (From Log)		1	1
1245	52601	50.03.01	10-Oct-89	14.0	14.5	150 ml	SM/ML (From Log)			
1245	52602	50.03.01	10-Oct-89	14.5	15.0	100 ml	SM/ML (From Log)			
1247	18024	3.7	3-Dec-90	12.0	12.5	200 ml	SP/SW		1	
1250	52699	50.03.01	6-Jan-90	12.0	12.5	250 ml	SC (From Log)			
1250	52700	50.03.01	6-Jan-90	12.5	13.0	200 ml	SC (From Log)		1	1
1250	52701	50.03.01	6-Jan-90	13.0	13.5	100 ml	SC (From Log)			
1250	52702	50.03.01	6-Jan-90	13.5	14.0	100 ml	SC (From Log)			

Appe[illegible] K
Archive Sample Test Plan

BORING NAME	SAMPLE ID	PROJECT NUMBER	SAMPLE DATE	TOP DEPTH (ft)	BOTTOM DEPTH (ft)	ESTIMATED SAMPLE VOLUME	VISUAL DESCRIPTION (1)	SAMPLING COMMENTS	ESTIMATED TESTS	
									GS	AL(4)
1250	52703	50.03.01	6-Jan-90	14.0	14.5	200 ml	ML (From Log)			
1250	52704	50.03.01	6-Jan-90	14.5	15.0	100 ml	ML (From Log)			
1250	52706	50.03.01	6-Jan-90	15.5	16.0	100 ml	ML (From Log)		1	1
1250	52707	50.03.01	6-Jan-90	16.0	16.5	100 ml	ML (From Log)			
1250	52708	50.03.01	6-Jan-90	16.5	17.0	100 ml	ML (From Log)			
1250	52709	50.03.01	6-Jan-90	17.0	17.5	100 ml	ML (From Log)			
1267	53035	50.03.01	14-Jun-89	11.0	11.5	150 ml	ML (From Log)			
1267	53036	50.03.01	14-Jun-89	11.5	12.0	150 ml	ML (From Log)		1	1
1267	53038	50.03.01	14-Jun-89	12.5	13.0	150 ml	ML (From Log)			
1274	53182	50.03.01	19-Jun-89	14.5	15.0	200 ml	SC/SP		1	1
1287	18900	3.7	17-Jul-89	7.5	8.0	200 ml	SP/SM			
1287	18901	3.7	17-Jul-89	8.0	8.5	200 ml	SW			
1287	18902	3.7	17-Jul-89	8.5	9.0	200 ml	SP		1	
1287	18903	3.7	17-Jul-89	9.0	9.5	200 ml	SP Fine to Very Fine			
1287	18904	3.7	17-Jul-89	9.5	10.0	100 ml	SP			
1293	19033	3.7	25-Jul-89	9.0	9.5	150 ml	SC (From Log)		1	1
1309	53876	50.03.01	30-Jun-89	11.5	12.0	100 ml	SC (From Log)			1
1336	19982	3.7	2-Aug-89	10.5	11.0	150 ml	SC w/ Gravel to 1/4"			
1336	54415	50.03.01	2-Aug-89	11.0	11.5	100 ml	SC			1
1336	54416	50.03.01	2-Aug-89	11.5	12.0	100 ml	SC/SW			
1336	54417	50.03.01	2-Aug-89	12.0	12.5	100 ml	SC			
1336	54418	50.03.01	2-Aug-89	12.5	13.0	100 ml	SW Very Angular		1	
1336	54419	50.03.01	2-Aug-89	13.0	13.5	100 ml	SC/SP		Omitted	
1336	54420	50.03.01	2-Aug-89	13.5	14.0	100 ml	SC w/ Gravel		Omitted	
1336	54421	50.03.01	2-Aug-89	14.0	14.5	200 ml	SP/SW			
1336	54422	50.03.01	2-Aug-89	14.5	15.0	200 ml	SC/SW			
1336	54426	50.03.01	2-Aug-89	16.5	17.0	100 ml	SC Very Fine Sand			1
1336	54427	50.03.01	2-Aug-89	17.0	17.5	200 ml	SC Very Fine Sand			
1338	50017	50.03.01	8-Aug-89	6.0	6.5	150 ml	SW (From Log)			
1338	50018	50.03.01	8-Aug-89	6.5	7.0	150 ml	SW (From Log)		1	
1338	50020	50.03.01	8-Aug-89	7.5	8.0	200 ml	SW (From Log)			
1338	50021	50.03.01	8-Aug-89	8.0	8.5	150 ml	SW (From Log)			

316

Appendix K
Archive Sample Test Plan

BORING NAME	SAMPLE ID	PROJECT NUMBER	SAMPLE DATE	TOP DEPTH (ft)	BOTTOM DEPTH (ft)	ESTIMATED SAMPLE VOLUME	VISUAL DESCRIPTION (1)	SAMPLING COMMENTS	ESTIMATED TESTS	
									GS	AL(4)
1339	50037	50.03.01	4-Oct-89	6.0	6.5	100 ml	SC			
1339	50038	50.03.01	4-Oct-89	6.5	7.0	100 ml	SC			
1339	50040	50.03.01	4-Oct-89	7.5	8.0	100 ml	SC w/ Some Gravel			
1339	50041	50.03.01	4-Oct-89	8.0	8.5	150 ml	SC		1	1
1339	50042	50.03.01	4-Oct-89	8.5	9.0	100 ml	SP w/ Trace Silt			
1339	50043	50.03.01	4-Oct-89	9.0	9.5	250 ml	SC w/ Gravel			
1339	50044	50.03.01	4-Oct-89	9.5	10.0	100 ml	SC/GC			
1346	54627	50.03.01	7-Jan-90	17.0	17.5	100 ml	ML/SC		1	1
1346	54628	50.03.01	7-Jan-90	17.5	18.0	100 ml	SC			
1346	54629	50.03.01	7-Jan-90	18.0	18.5	100 ml	ML/SM			1
1347	54648	50.03.01	9-Aug-89	17.5	18.0	100 ml	ML			
1347	54649	50.03.01	9-Aug-89	18.0	18.5	100 ml	ML w/ Gravel			1
1347	54650	50.03.01	9-Aug-89	18.5	19.0	100 ml	ML w/ Trace Very Fine Sand			
1348	54667	50.03.01	29-Aug-89	17.5	18.0	200 ml	SW Slightly Silty		1	1
1348	54668	50.03.01	29-Aug-89	18.0	18.5	100 ml	SC/SW			
1349	54681	50.03.01	28-Aug-89	14.0	14.5	200 ml	ML/SC (From Log)		1	1
1349	54682	50.03.01	28-Aug-89	14.5	15.0	100 ml	ML/SC (From Log)			
1351	54724	50.03.01	10-Aug-89	15.5	16.0	100 ml	SM (From Log)			
1351	54725	50.03.01	10-Aug-89	16.0	16.5	100 ml	SM (From Log)			
1351	54726	50.03.01	10-Aug-89	16.5	17.0	100 ml	SM (From Log)			
1351	54727	50.03.01	10-Aug-89	17.0	17.5	100 ml	SM (From Log)		1	1
1351	54728	50.03.01	10-Aug-89	17.5	18.0	100 ml	SM (From Log)			
1351	54729	50.03.01	10-Aug-89	18.0	18.5	100 ml	SM (From Log)			
1351	54730	50.03.01	10-Aug-89	18.5	19.0	100 ml	SM (From Log)			
1352	54739	50.03.01	24-Aug-89	13.0	13.5	100 ml	SM/SP		1	1
1352	54740	50.03.01	24-Aug-89	13.5	14.0	100 ml	SM/SP			
1354	54787	50.03.01	28-Aug-89	17.0	17.5	150 ml	SW		1	
1354	54788	50.03.01	28-Aug-89	17.5	18.0	200 ml	CL/SC		Omitted	
1354	54789	50.03.01	28-Aug-89	18.0	18.5	200 ml	SP w/ Trace Gravel			
1356	54819	50.03.01	25-Aug-89	13.0	13.5	50 ml	ML/SC			1
1356	54820	50.03.01	25-Aug-89	13.5	14.0	150 ml	CL w/ Sand			
1356	54821	50.03.01	25-Aug-89	14.0	14.5	200 ml	SC/SW		1	1
1356	54822	50.03.01	25-Aug-89	14.5	15.0	250 ml	SC			

Appendix K
Archive Sample Test Plan

BORING NAME	SAMPLE ID	PROJECT NUMBER	SAMPLE DATE	TOP DEPTH (ft)	BOTTOM DEPTH (ft)	ESTIMATED SAMPLE VOLUME	VISUAL DESCRIPTION (1)	SAMPLING COMMENTS	ESTIMATED TESTS	
									GS	AL(4)
1356	54826	50.03.01	25-Aug-89	16.5	17.0	250 ml	SP/SW		1	
1356	54827	50.03.01	25-Aug-89	17.0	17.5	250 ml	SC,SP			
1359	54876	50.03.01	25-Aug-89	11.5	12.0	200 ml	ML to SP Very Fine			1
1360	54900	50.03.01	27-Aug-89	13.5	14.0	150 ml	SP/SM		1	1
1360	54901	50.03.01	27-Aug-89	14.0	14.5	200 ml	SM/ML			
11112	30920A11112-03	50.03.24	20-Sep-93	5.5	6.0	100 ml	SW	ARCHIVE	1	
11112	30920A11112-05	50.03.24	20-Sep-93	7.5	8.0	150 ml	SP/SW	ARCHIVE		
11112	30920A11112-06	50.03.24	20-Sep-93	8.0	8.5	100 ml	SW/GP	ARCHIVE		
11112	30920A11112-08	50.03.24	20-Sep-93	9.0	9.5	200 ml	SW w/ Gravel	ARCHIVE	1	
11112	30920A11112-09	50.03.24	20-Sep-93	9.5	10.0	200 ml	SW w/ Gravel	ARCHIVE		
11112	30920A11112-10	50.03.24	20-Sep-93	10.0	10.5	250 ml	SM w/ Gravel	ARCHIVE		
11112	30920A11112-11	50.03.24	20-Sep-93	10.5	11.0	200 ml	SW w/ Gravel	ARCHIVE	1	
11112	30920A11112-12	50.03.24	20-Sep-93	11.0	11.5	250 ml	SW w/ Gravel	ARCHIVE		
11112	30920A11112-13	50.03.24	20-Sep-93	11.5	12.0	200 ml	SW w/ Gravel	ARCHIVE		
11112	30920A11112-14	50.03.24	20-Sep-93	12.0	12.5	250 ml	SW/SP Some Silt	ARCHIVE		
11112	30920A11112-15	50.03.24	20-Sep-93	12.5	13.0	200 ml	SP w/ Some Gravel	ARCHIVE	1	
11112	30920A11112-16	50.03.24	20-Sep-93	13.0	13.5	250 ml	SW w/ Gravel	ARCHIVE		
11112	30920A11112-17	50.03.24	20-Sep-93	13.5	14.0	250 ml	SP	ARCHIVE		
11208	30909A11208-9	50.03.24	9-Sep-93	6.0	6.5	250 ml	SP	ARCHIVE		
11208	30909A11208-10	50.03.24	9-Sep-93	6.5	7.0	100 ml	SM/SP	ARCHIVE	1	
11208	30909A11208-11	50.03.24	9-Sep-93	7.0	7.5	100 ml	SP	ARCHIVE		
11208	30909A11208-15	50.03.24	9-Sep-93	9.0	9.5	150 ml	SW	ARCHIVE	1	
11208	30909A11208-16	50.03.24	9-Sep-93	9.5	10.0	100 ml	SP w/ Scattered Gravel	ARCHIVE		
11208	30909A11208-21	50.03.24	9-Sep-93	12.0	12.5	300 ml	SM/ML	ARCHIVE		1
1503	000722	3.7.5	1-Jul-90	17.0	17.5	100 ml	SP	ARCHIVED		
1503	000724	3.7.5	1-Jul-90	18.0	18.5	100 ml	SP	ARCHIVED	1	
1503	000725	3.7.5	1-Jul-90	18.5	19.0	150 ml	SP	ARCHIVED		
1503	000726	3.7.5	1-Jul-90	19.0	19.5	250 ml	SP	ARCHIVED		
1501	051127	50.03.01	11-Jan-90	17.0	17.5	100 ml	SP (From Log)	ARCHIVE	1	
1149	015977	3.7	16-Jul-89	10.5	11.0	100 ml	SC (From Log)		1	1
1149	051420	50.03.01	16-Jul-89	14.0	14.5	100 ml	SM (From Log)		1	1
1153	016063	3.7	10-Aug-89	9.0	9.5	150 ml	SW (From Log)		1	

318

Appendix K
Archive Sample Test Plan

BORING NAME	SAMPLE ID	PROJECT NUMBER	SAMPLE DATE	TOP DEPTH (ft)	BOTTOM DEPTH (ft)	ESTIMATED SAMPLE VOLUME	VISUAL DESCRIPTION (1)	SAMPLING COMMENTS	ESTIMATED TESTS	
									GS	AL(4)
1241	017889	3.7	11-May-89	9.0	9.5	75 ml	SM (From Log)		1	1
1241	017890	3.7	11-May-89	9.5	10.0	75 ml	SM (From Log)			
1241	017892	3.7	11-May-89	10.5	11.0	75 ml	SM (From Log)			
1420	015537	3.7	19-Jan-90	11.0	11.5	100 ml	ML (From Log)		1	1
1420	015538	3.7	19-Jan-90	11.5	12.0	50 ml	ML (From Log)			
1420	051135	50.03.01	19-Jan-90	12.0	12.5	200 ml	ML (From Log)			
1420	051136	50.03.01	19-Jan-90	12.5	13.0	150 ml	ML (From Log)			
1420	051137	50.03.01	19-Jan-90	13.0	13.5	100 ml	ML (From Log)			
1420	051138	50.03.01	19-Jan-90	13.5	14.0	100 ml	ML (From Log)			
1420	051140	50.03.01	19-Jan-90	14.5	15.0	200 ml	SM (From Log)		1	1
1420	051143	50.03.01	19-Jan-90	16.0	16.5	100 ml	SW/SP (From Log)		1	
1420	051144	50.03.01	19-Jan-90	16.5	17.0	150 ml	SW/SP (From Log)			
1420	051145	50.03.01	19-Jan-90	17.0	17.5	100 ml	SW/SP (From Log)			
1420	051146	50.03.01	19-Jan-90	17.5	18.0	100 ml	SW/SP (From Log)			
1420	051147	50.03.01	19-Jan-90	18.0	18.5	100 ml	SP (From Log)		1	
1420	051148	50.03.01	19-Jan-90	18.5	19.0	100 ml	SP (From Log)			
1420	051149	50.03.01	19-Jan-90	19.0	19.5	150 ml	SP (From Log)			
1420	051150	50.03.01	19-Jan-90	19.5	20.0	150 ml	SP (From Log)			
							Total		67	72

Notes:

1. Samples not visually inspected were classified on the basis of boring log descriptions and are identified as such in the "VISUAL DESCRIPTION" column.
2. Sample to be tested were selected from a large group of available archive samples.
3. GS = Grain-size test (ASTM D 422)
   AL = Atterberg Limits Test (ASTM D 4318)
4. For coarse-grained materials, perform Atterberg Limits tests only on those samples whose fines content (defined as the percent passing the No. 200 sieve) is at least 25 percent.