MAPS

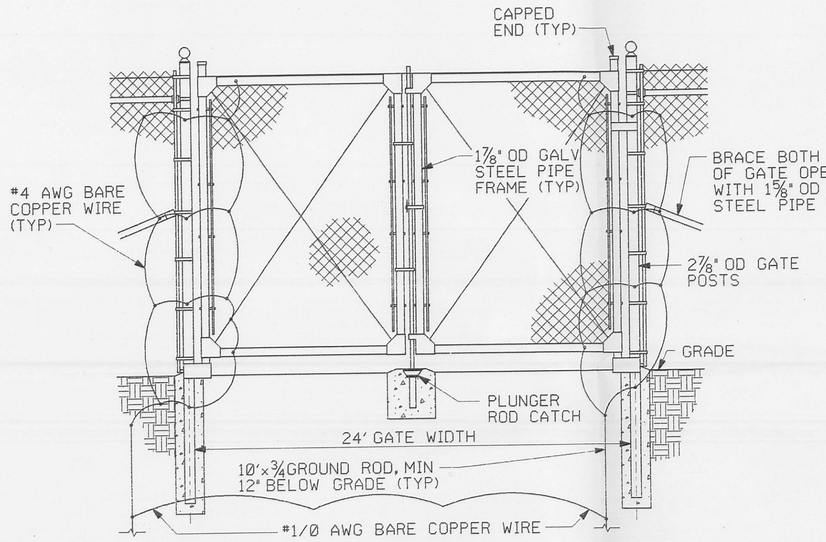

DOUBLE GATE DETAIL (1 / G0020)

NTS

REF G0005 G0006

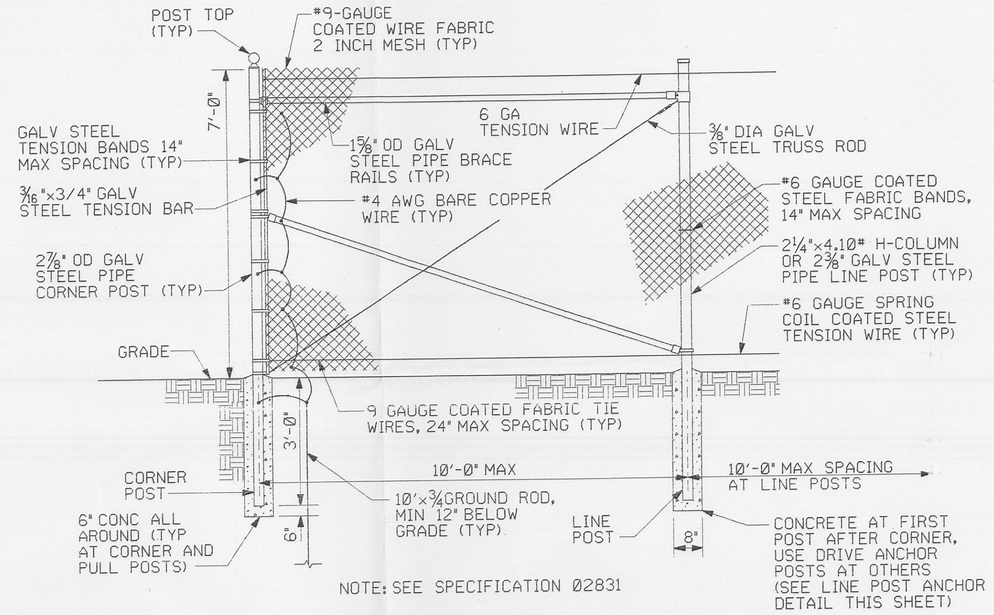

NOTE: SEE SPECIFICATION 02831

CHAINLINK FENCE DETAIL (2 / G0020)

NTS

REF G0006

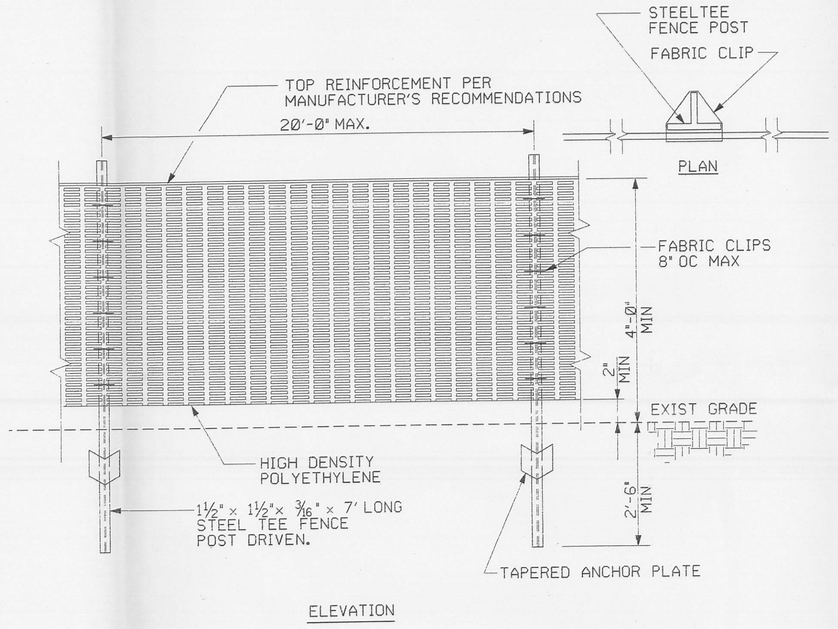

CONSTRUCTION FENCE DETAIL (3 / G0020)

NTS

REF G0006 G0009 G0010 G0011

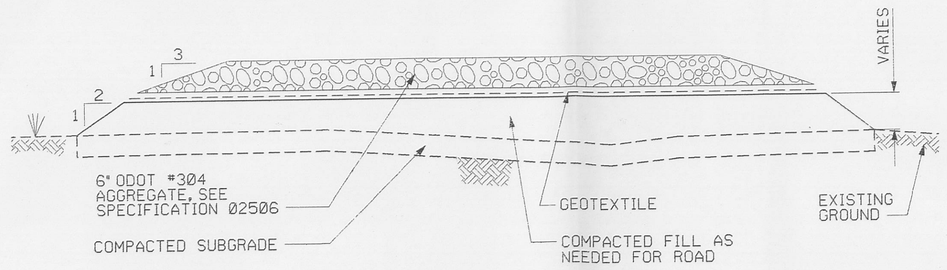

NOTE:
GRAVEL ACCESS ROAD SHALL BE 20' WIDE UNLESS NOTED OTHERWISE ON DRAWINGS. PROVIDE POSITIVE CROSS DRAINAGE.

THE SUPPORT AREA GEOTEXTILE IS TO BE PLACED DIRECTLY ON GROUND WITH MINIMAL GRADING (NO CLEARING AND GRUBBING)

FOR GEOTEXTILE SEE SPECIFICATION SECTION 02506

GRAVEL SURFACE DETAIL (4 / G0020)

NTS

REF G0005 G0006 G0007

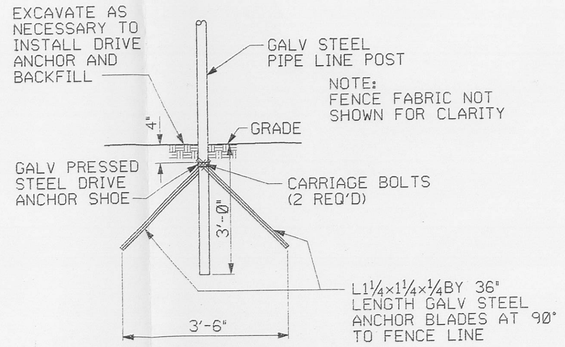

LINE POST DRIVE ANCHOR DETAIL

NTS

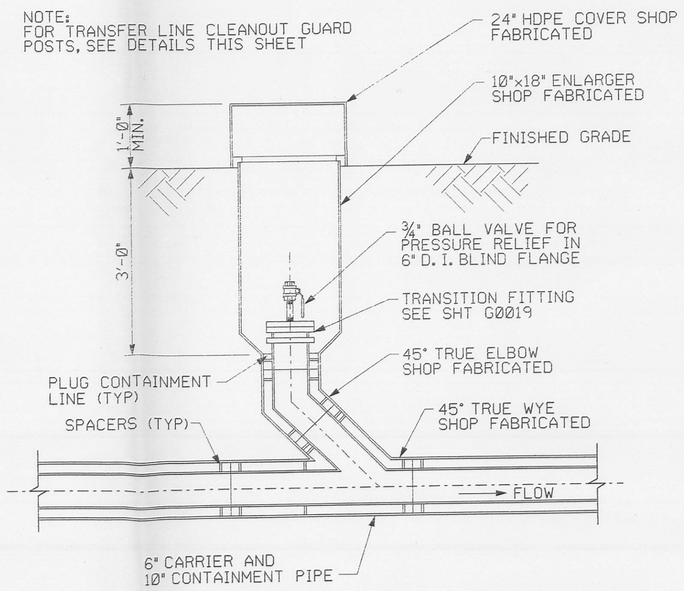

TRANSFER LINE CLEANOUT DETAIL (5 / G0020)

NTS (SEE NOTE 1)

REF G0014 G0015 G0016

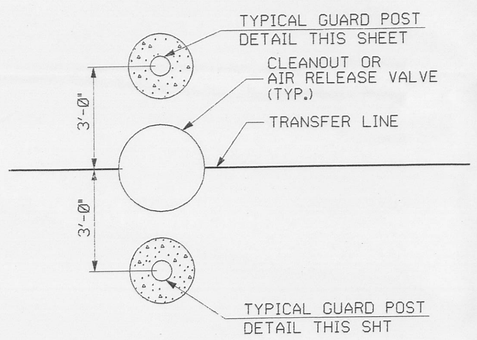

GUARD POST LAYOUT DETAIL (6 / G0020)

NTS

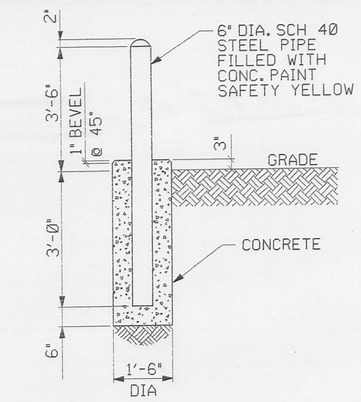

TYPICAL GUARD POST DETAIL

NTS

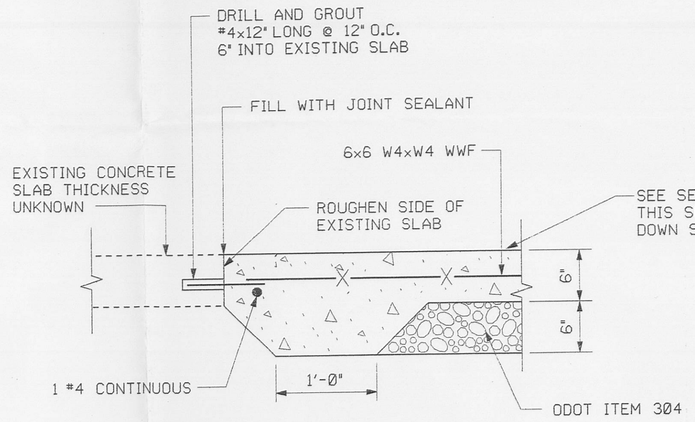

ELECTRICAL SWITCH GEAR PAD EXTENSION (8 / G0020)

NTS

REF E0012

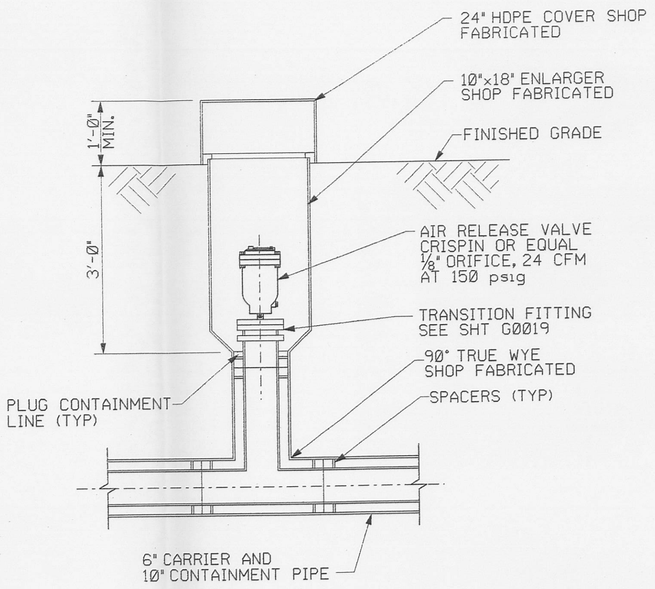

TRANSFER LINE AIR RELEASE VALVE DETAIL (9 / G0020)

NTS

REF G0014 G0015 G0016

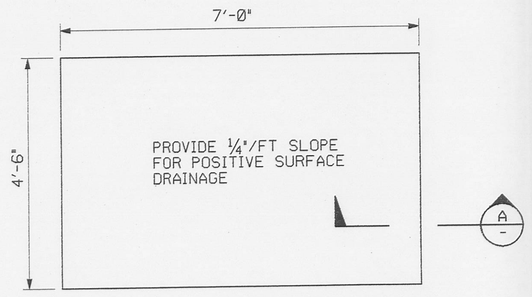

ELECTRICAL SERVICE PANEL RACK PAD DETAIL (7 / G0020)

NTS

REF G0005 G0006 G0007 G0009 G0010 G0011

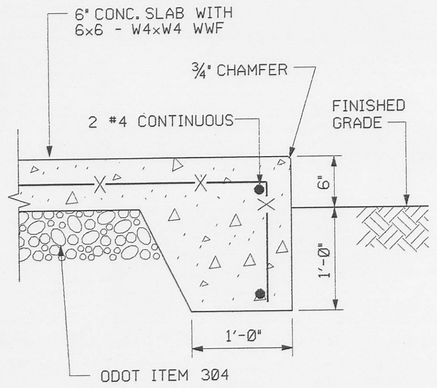

SECTION (A / -)

NTS

NOTES

1. AIR RELEASE VALVE AND CLEANOUT ASSEMBLIES SHALL BE SHOP FABRICATED AND TESTED. ALLOW FOR FIELD CONNECTION TO PIPELINE.

RELATED DWG NO.	DRAWING TITLE	SHEET NO.
92X-5900-X-00320	DRAWING INDEX	X0002
92X-5900-X-00321	LEGEND AND GENERAL NOTES	X0003
92X-5900-G-00282	SITE PLAN	G0005
92X-5900-G-00284	SITE PLAN - SUPPORT AREA	G0006
92X-5900-G-00303	ENLARGEMENT RETENTION BASIN #1	G0009
92X-5900-G-00371	ENLARGEMENT RETENTION BASIN #2	G0010
92X-5900-G-00372	ENLARGEMENT RETENTION BASIN #3	G0011
92X-5900-G-00304	TRANSFER LINE - PLAN AND PROFILE SHEET 1 OF 3	G0014
92X-5900-G-00305	TRANSFER LINE - PLAN AND PROFILE SHEET 2 OF 3	G0015
92X-5900-G-00306	TRANSFER LINE - PLAN AND PROFILE SHEET 3 OF 3	G0016
92X-5900-G-00307	WATER LINE DETAILS	G0019
92X-5900-E-00409	ELECTRICAL - DETAILS - SHEET 4	E0012

000023

REV. NO.	ISSUE OR REVISION PURPOSE - DESCRIPTION	A-E	FERMCO	DATE
0	CERTIFIED FOR CONSTRUCTION	JMU	N/A	6/13/97

INITIALS AND DATE

UNITED STATES DEPARTMENT OF ENERGY
FERNALD ENVIRONMENTAL MANAGEMENT PROJECT

THIS DRAWING PREPARED BY
PARSONS
THE RALPH M. PARSONS CO. - PARSONS MAIN, INC. - ENGINEERING-SCIENCE, INC.
CINCINNATI, OHIO

PROJECT NAME
WASTE UNITS REMEDIATION
SOUTHERN WASTE UNITS - SITE PREPARATION PACKAGE

DRAWING TITLE
CIVIL
MISCELLANEOUS DETAILS
SHEET 1 OF 3

DRAWN BY	DATE	LEAD ENGINEER	DATE	CHECKED BY	DATE
R. LINDGREN	06/06/96	F.M. PARTON, JR.	6/13/97	K. GERARD	1/20/97

PLANT/BLDG. NO.	FLOOR	SCALE	CLASS
		NONE	

SUBMITTED FOR APPROVAL	FERMCO CRU APPROVAL	FERMCO PROJECT NO.
J.M. USHER 6/13/97	N/A	20400

A-E DATE — DATE

PREPARED UNDER PARSONS PROJECT ORDER NUMBER	DOE PROJECT NO.	FEMP PROJECT NO.	DRAWING INDEX CODE NO.	SHEET NO.	REV. NO.
SCEP/P0165		WBS 1.1.1.1.2.3.6 00-90701	92X-5900-G-00309	G0020	0

STATE OF OHIO — FRANKLIN M. PARTON, JR. NO. E-57614 — REGISTERED PROFESSIONAL ENGINEER

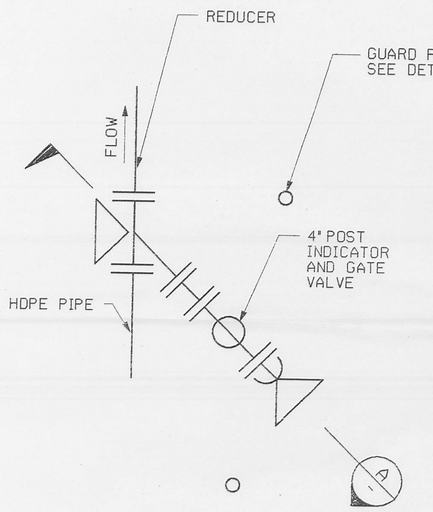

PLAN

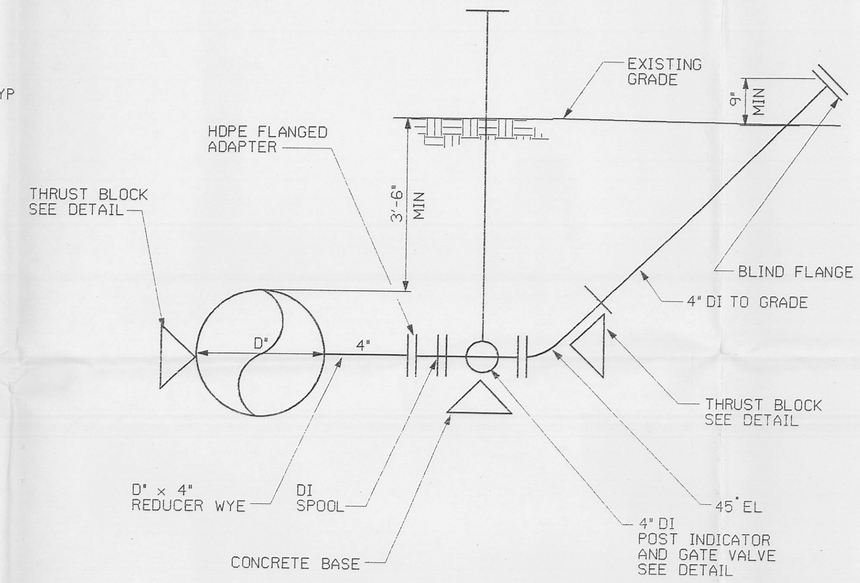

SECTION A
NTS

TYPICAL CLEANOUT DETAIL (1)
TREATMENT LINE
DISCHARGE LINE
NTS
REF G0021
REF G0014 G0015 G0016

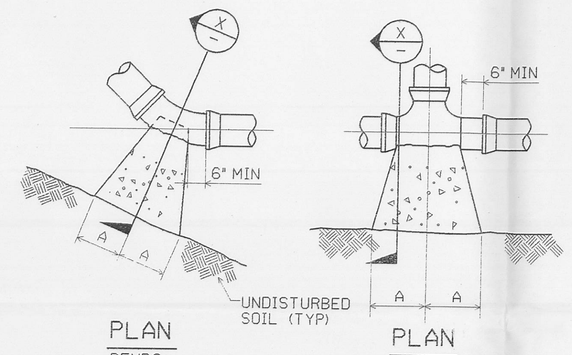

PLAN
BENDS

PLAN
TEES

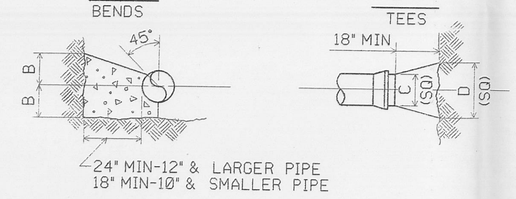

SECTION X
PLAN
PLUGS

TYPE	SIZE	1/4 BENDS		1/8 BENDS		1/16 BENDS		TEES		PLUGS	
		A	B	A	B	A	B	A	B	C	D
2000 PSF SOIL	6"	16"	10"	9"	10"	6"	8"	10"	12"	10"	21"
	8"	22"	13"	12"	13"	8"	10"	13"	16"	12"	29"
	10"	26"	17"	14"	17"	10"	13"	16"	20"	14"	36"
	12"	29"	21"	16"	21"	11"	16"	18"	24"	16"	41"
	16"	38"	27"	-	-	-	-	24"	30"	-	-
	20"	42"	30"	-	-	-	-	27"	30"	-	-
	24"	48"	30"	-	-	-	-	36"	30"	-	-

NOTE: BASED ON 150 PSI STATIC PRESSURE PLUS A.W.W.A. WATER HAMMER. ALL BEARING SURFACES TO BE CARRIED TO UNDISTURBED GROUND.

THRUST BLOCK DETAILS
NTS

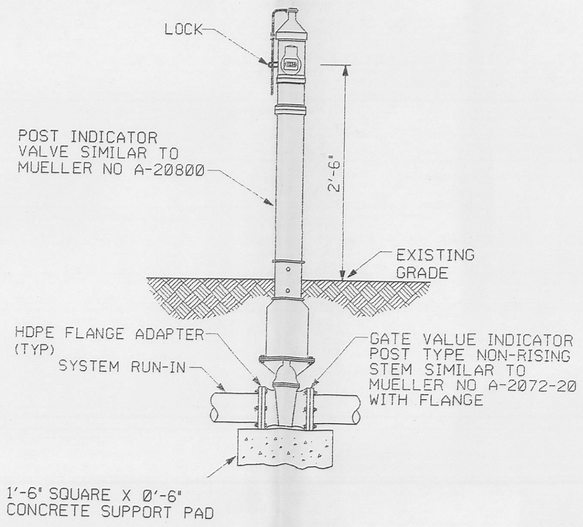

POST INDICATOR VALVE DETAIL
LINES SIZES 12" AND LESS
NTS

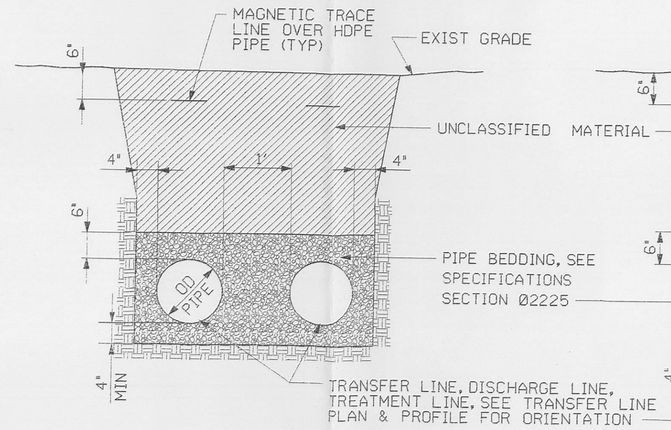

TYPICAL 2 PIPE BEDDING DETAIL (2)
NTS
REF G0021
REF G0014 G0015 G0016

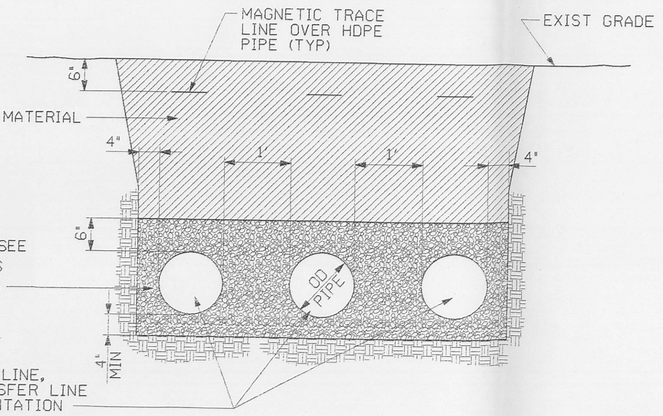

TYPICAL 3 PIPE BEDDING DETAIL (3)
NTS
REF G0021
REF G0014 G0015 G0016

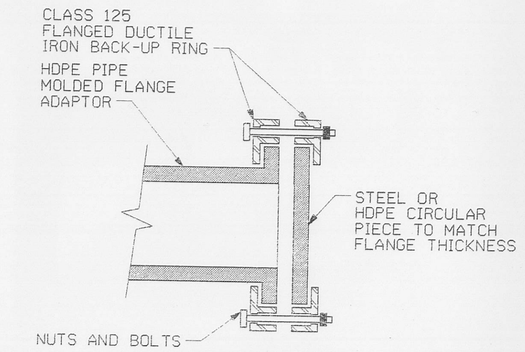

TYPICAL BLIND FLANGE DETAIL (4)
END PIPE
NTS
REF G0021
REF G0014 G0015 G0016

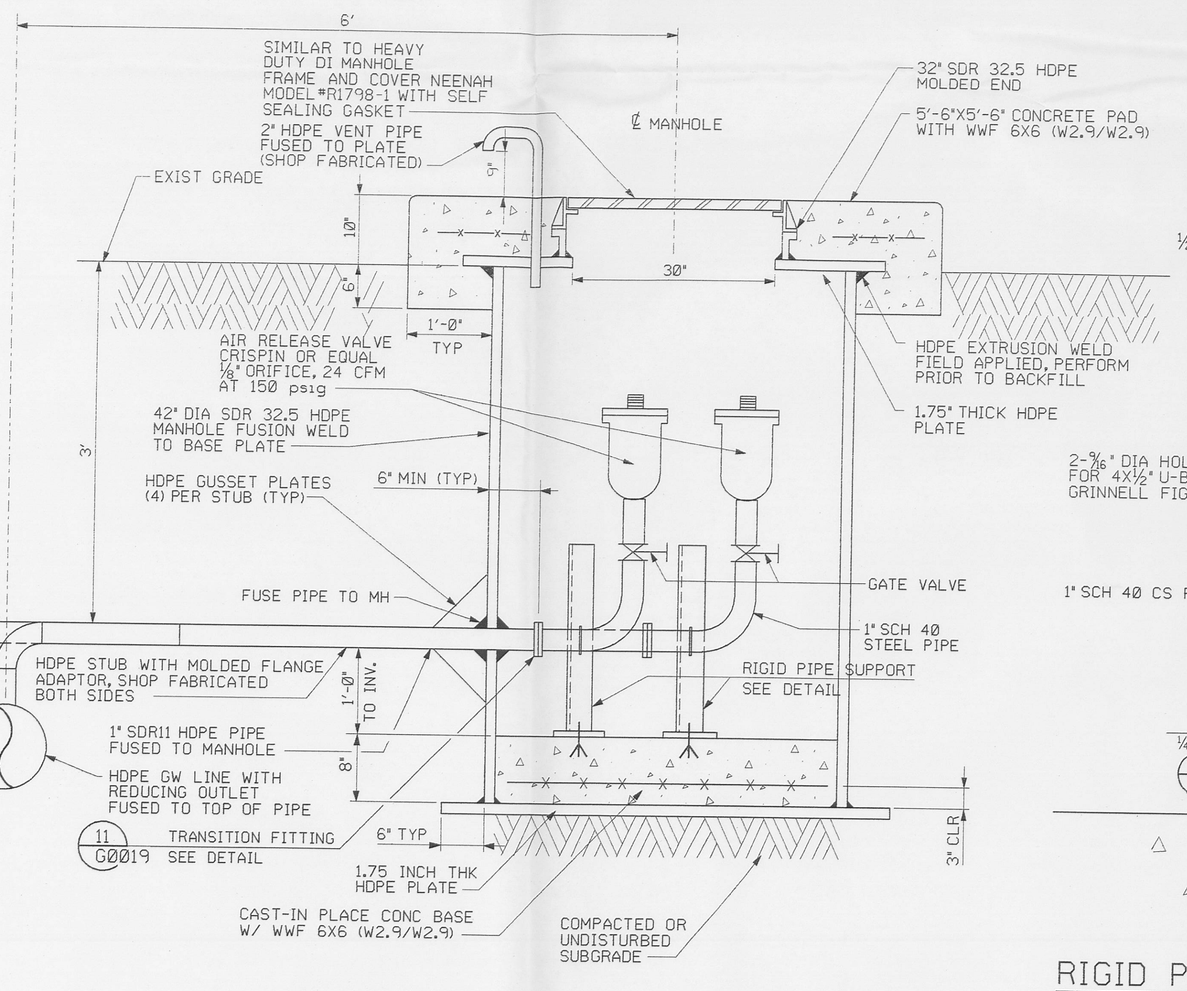

AIR RELEASE MANHOLE DETAIL (5)
TREATMENT LINE
DISCHARGE LINE
NTS
REF G0021
REF G0015

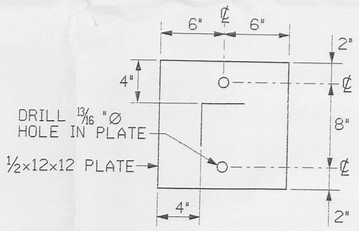

SECTION B
NTS

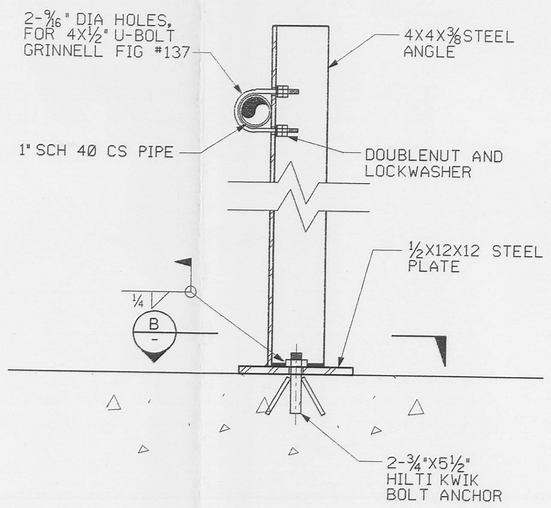

RIGID PIPE SUPPORT DETAIL
NTS

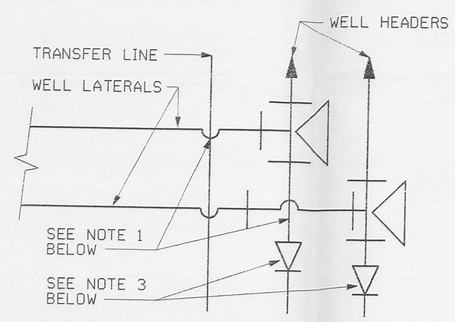

CROSSING

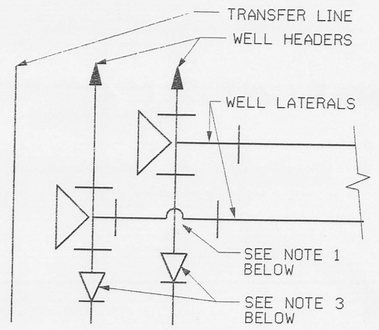

OFFSET

PLAN

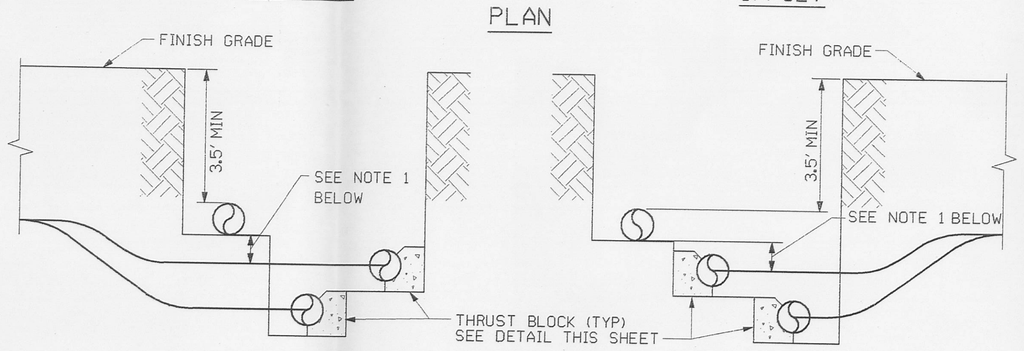

ELEVATION

NOTE:

1. BEND LATERAL(S) AND HEADER TO PROVIDE 8" CLEARANCE. MINIMUM BEND RADIUS IS 20 DIAMETERS OR AS SPECIFIED BY PIPE MANUFACTURER.
2. COMMON TRENCH WITH 2 LATERIAL TEES SHOWN WITH THRUST BLOCK BEARING ON NATIVE SOIL. COMMON TRENCH WITH 1 LATERAL TEE WILL BE SIMILAR.
3. REDUCERS MAY BE REQUIRED UPSTREAM OF TEE. TEE SIZE SHALL MATCH DOWNSTREAM PIPE SIZE. SEE SHT G0014 AND SHT G0015.

TYPICAL TEE/ LATERAL DETAIL (6)
NTS
REF G0021
REF G0014 G0015

STATE OF OHIO FRANKLIN M. PARTON, JR. NO. E-57614 REGISTERED PROFESSIONAL ENGINEER

PREPARED UNDER PARSONS PROJECT ORDER NUMBER SCEP/P0165

NOTES

1. UNLESS OTHERWISE NOTED ALL CONCRETE SHALL BE 3000 PSI AS SPECIFIED IN THE SPECIFICATIONS.

RELATED DWG NO.	DRAWING TITLE	SHEET NO.
92X-5900-X-00320	DRAWING INDEX	X0002
92X-5900-X-00321	LEGEND AND GENERAL NOTES	X0003
92X-5900-G-00304	TRANSFER LINE - PLAN AND PROFILE - SHEET 1 OF 3	G0014
92X-5900-G-00305	TRANSFER LINE - PLAN AND PROFILE - SHEET 2 OF 3	G0015
92X-5900-G-00306	TRANSFER LINE - PLAN AND PROFILE - SHEET 3 OF 3	G0016
92X-5900-G-00309	MISCELLANEOUS DETAILS - SHEET 1 OF 3	G0020
92X-5900-G-00307	WATER LINE DETAILS	G0019

000024

REV. NO.	ISSUE OR REVISION PURPOSE - DESCRIPTION	A-E	FERMCO	DATE
0	CERTIFIED FOR CONSTRUCTION	JMU	N/A	6/13/97

INITIALS AND DATE

UNITED STATES DEPARTMENT OF ENERGY
FERNALD ENVIRONMENTAL MANAGEMENT PROJECT

THIS DRAWING PREPARED BY
PARSONS
THE RALPH M. PARSONS CO. - PARSONS MAIN, INC. - ENGINEERING-SCIENCE, INC.
CINCINNATI, OHIO

PROJECT NAME
WASTE UNITS REMEDIATION
SOUTHERN WASTE UNITS - SITE PREPARATION PACKAGE

DRAWING TITLE
CIVIL
MISCELLANEOUS DETAILS
SHEET 2 OF 3

DRAWN BY	DATE	LEAD ENGINEER	DATE	CHECKED BY	DATE
T. BROWN	03-20-97	F.M. PARTON, JR.	6/13/97	K. GERARD	1/20/97

PLANT/BLDG. NO.	FLOOR	SCALE	CLASS
		NONE	

SUBMITTED FOR APPROVAL	FERMCO CRU APPROVAL
J.M. USHER 6/13/97	NA

A-E	DATE	DOE PROJECT NO.	FEMP PROJECT NO.	DRAWING INDEX CODE NO.	SHEET NO.	REV. NO.
			WBS 1.1.1.1.2.3.6 00-90701	92X-5900-G-00308	G0021	0

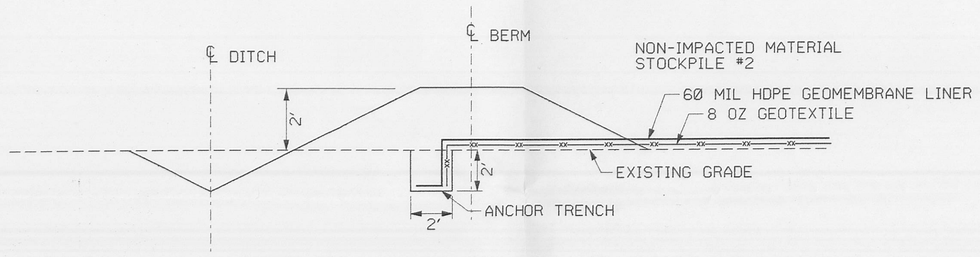

NOTE:
BACKFILL ANCHOR TRENCH WITH CL MATERIAL AND COMPACT TO 95% STANDARD PROCTOR (ASTM D698).

ANCHOR TRENCH DETAIL (1 / G0023) REF G0008
NON-IMPACTED MATERIAL STOCKPILE #2
NTS

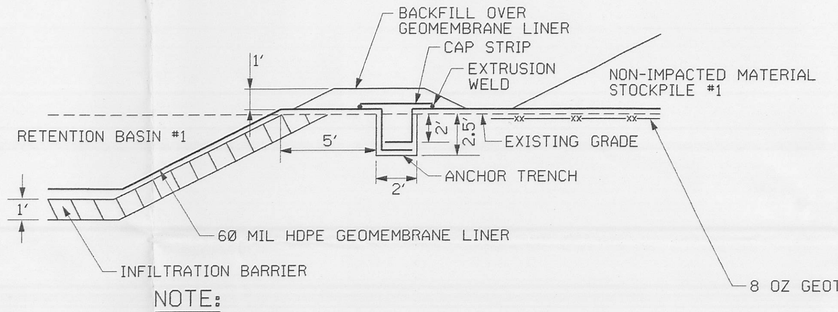

NOTE:
1. BACKFILL ANCHOR TRENCH WITH CL MATERIAL AND COMPACT TO 95% STANDARD PROCTOR (ASTM D698).
2. CAP STRIP SHALL BE THE SAME MATERIAL AS HDPE GEOMEMBRANE LINER.

ANCHOR TRENCH DETAIL (2 / G0023) REF G0009
RETENTION BASIN #1/
NON-IMPACTED MATERIAL STOCKPILE #1
NTS

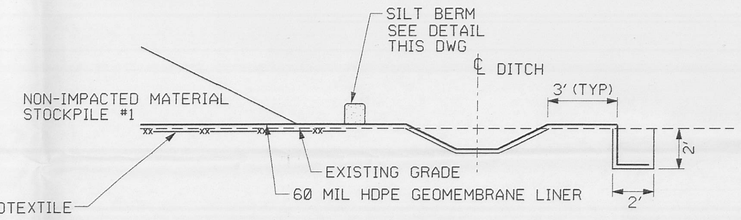

NOTE:
BACKFILL ANCHOR TRENCH WITH CL MATERIAL AND COMPACT TO 95% STANDARD PROCTOR (ASTM D698).

ANCHOR TRENCH DETAIL (3 / G0023) REF G0005
NON-IMPACTED MATERIAL STOCKPILE #1/DITCH
NTS

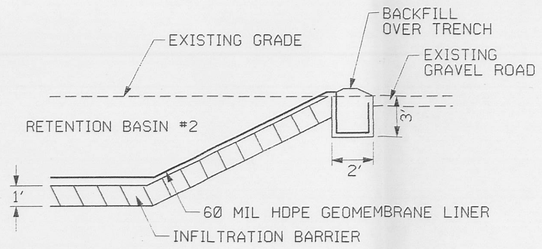

NOTE:
BACKFILL ANCHOR TRENCH WITH CL MATERIAL AND COMPACT TO 95% STANDARD PROCTOR (ASTM D698).

ANCHOR TRENCH DETAIL (4 / G0023) REF G0011
RETENTION BASIN #2/EXISTING ROAD
NTS

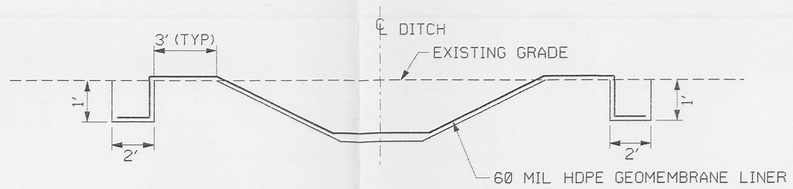

NOTE:
BACKFILL ANCHOR TRENCH WITH CL MATERIAL AND COMPACT TO 95% STANDARD PROCTOR (ASTM D698).

ANCHOR TRENCH DETAIL (5 / G0023) REF G0012
FLAT BOTTOM DITCH (TYP)
NTS

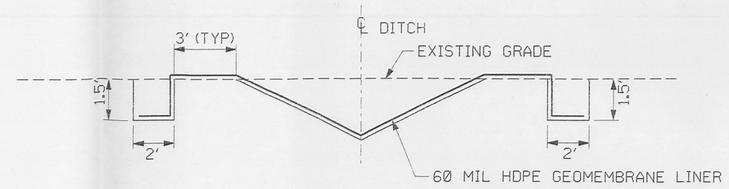

NOTE:
BACKFILL ANCHOR TRENCH WITH CL MATERIAL AND COMPACT TO 95% STANDARD PROCTOR (ASTM D698).

ANCHOR TRENCH DETAIL (6 / G0023) REF G0012
V - DITCH (TYP)
NTS

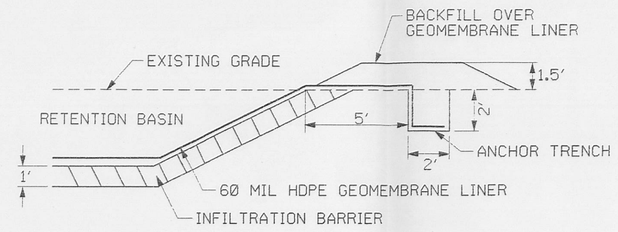

NOTE:
BACKFILL ANCHOR TRENCH WITH CL MATERIAL AND COMPACT TO 95% STANDARD PROCTOR (ASTM D698).

ANCHOR TRENCH DETAIL (7 / G0023) REF G0009 G0010 G0011
RETENTION BASIN (TYP)
NTS

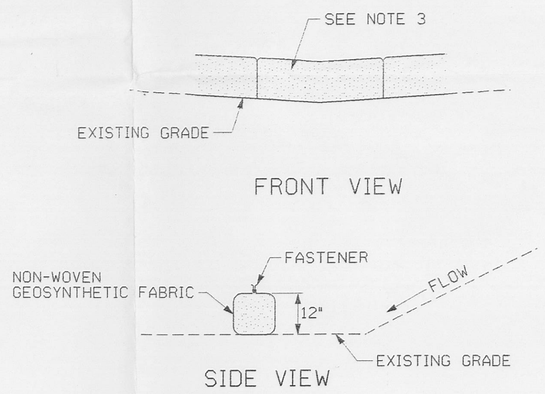

NOTES:
1. LENGTH OF INDIVIDUAL SILT BERM MAY VARY AS REQUIRED FOR HANDLING
2. WHERE TWO ENDS OF SILT BERM MEET OVERLAP 1 FOOT MIN.
3. #57 STONE, ODOT ITEM 703.01

SILT BERM DETAIL (8 / G0023)
NTS

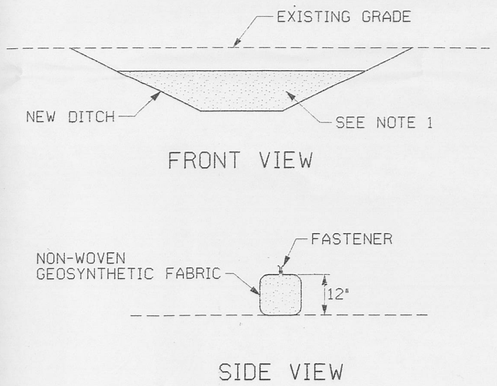

NOTES:
1. #57 STONE, ODOT ITEM 703.01

SEDIMENT BARRIER DETAIL (9 / G0023) REF G0005
NTS

NOTES

RELATED DWG NO.	DRAWING TITLE	SHEET NO.
92X-5900-X-00320	DRAWING INDEX	X0002
92X-5900-X-00321	LEGEND AND GENERAL NOTES	X0003
92X-5900-G-00282	SITE PLAN	G0005
92X-5900-G-00390	SITE PLAN - PADDYS RUN AREA	G0008
92X-5900-G-00303	ENLARGEMENT RETENTION BASIN #1	G0009
92X-5900-G-00371	ENLARGEMENT RETENTION BASIN #2	G0010
92X-5900-G-00372	ENLARGEMENT RETENTION BASIN #3	G0011
92X-5900-G-00311	EROSION AND SEDIMENT CONTROL - SHEET 1 OF 2	G0012

000026

REV. NO.	ISSUE OR REVISION PURPOSE - DESCRIPTION	A-E	FERMCO	DATE
0	CERTIFIED FOR CONSTRUCTION	JMW	N/A	6/12/97

INITIALS AND DATE

UNITED STATES DEPARTMENT OF ENERGY
FERNALD ENVIRONMENTAL MANAGEMENT PROJECT

THIS DRAWING PREPARED BY
PARSONS
THE RALPH M. PARSONS CO. - PARSONS MAIN, INC. - ENGINEERING-SCIENCE, INC.
CINCINNATI, OHIO

PROJECT NAME
WASTE UNITS REMEDIATION
SOUTHERN WASTE UNITS - SITE PREPARATION PACKAGE

DRAWING TITLE
CIVIL
MISCELLANEOUS DETAILS
SHEET 3 OF 3

DRAWN BY	DATE	LEAD ENGINEER	DATE	CHECKED BY	DATE
D.R. FOX	05/22/97	Franklin M. Patton Jr.	6/12/97	TIM BROWN	6/6/97

PLANT/BLDG. NO.	FLOOR	SCALE	CLASS
		NONE	

SUBMITTED FOR APPROVAL	FERMCO CRU APPROVAL	FERMCO PROJECT NO.
A-E J. Wilder DATE 6/12/97	N/A DATE	20400

STATE OF OHIO — FRANKLIN M. PATTON, JR. NO. E-57614 — REGISTERED PROFESSIONAL ENGINEER — 6/12/97

PREPARED UNDER PARSONS PROJECT ORDER NUMBER	DOE PROJECT NO.	FEMP PROJECT NO.	DRAWING INDEX CODE NO.	SHEET NO.	REV. NO.
SCEP/P0165		WBS 1.1.1.1.2.3.6 00-90701	92X-5900-G-00452	G0023	0

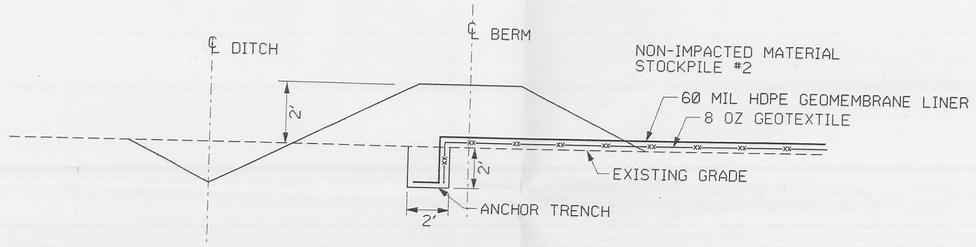

NOTE:
BACKFILL ANCHOR TRENCH WITH CL MATERIAL AND COMPACT TO 95% STANDARD PROCTOR (ASTM D698).

ANCHOR TRENCH DETAIL (1 G0023) REF G0008
NON-IMPACTED MATERIAL STOCKPILE #2
NTS

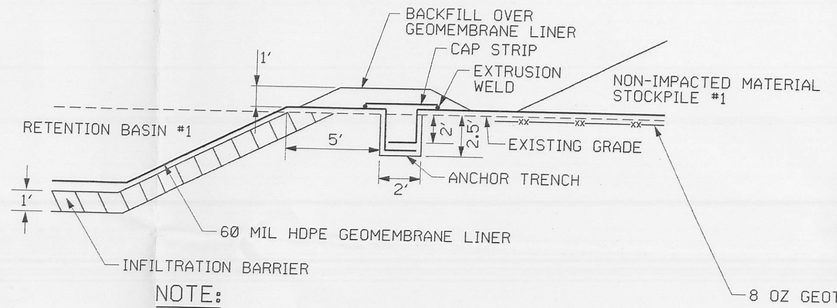

NOTE:
1. BACKFILL ANCHOR TRENCH WITH CL MATERIAL AND COMPACT TO 95% STANDARD PROCTOR (ASTM D698).
2. CAP STRIP SHALL BE THE SAME MATERIAL AS HDPE GEOMEMBRANE LINER.

ANCHOR TRENCH DETAIL (2 G0023) REF G0009
RETENTION BASIN #1/
NON-IMPACTED MATERIAL STOCKPILE #1
NTS

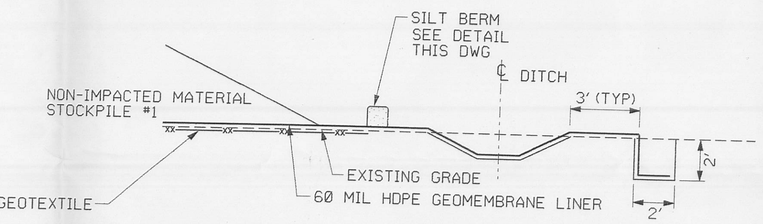

NOTE:
BACKFILL ANCHOR TRENCH WITH CL MATERIAL AND COMPACT TO 95% STANDARD PROCTOR (ASTM D698).

ANCHOR TRENCH DETAIL (3 G0023) REF G0005
NON-IMPACTED MATERIAL STOCKPILE #1/DITCH
NTS

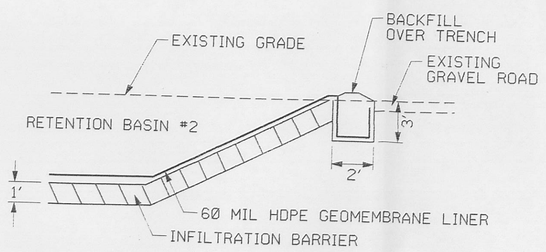

NOTE:
BACKFILL ANCHOR TRENCH WITH CL MATERIAL AND COMPACT TO 95% STANDARD PROCTOR (ASTM D698).

ANCHOR TRENCH DETAIL (4 G0023) REF G0011
RETENTION BASIN #2/EXISTING ROAD
NTS

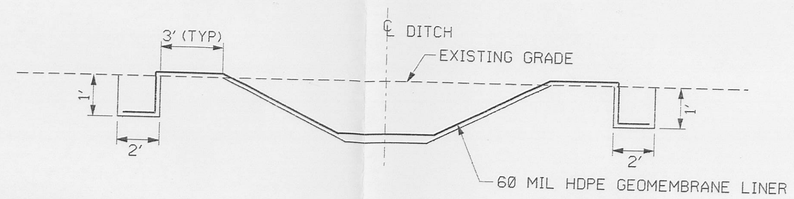

NOTE:
BACKFILL ANCHOR TRENCH WITH CL MATERIAL AND COMPACT TO 95% STANDARD PROCTOR (ASTM D698).

ANCHOR TRENCH DETAIL (5 G0023) REF G0012
FLAT BOTTOM DITCH (TYP)
NTS

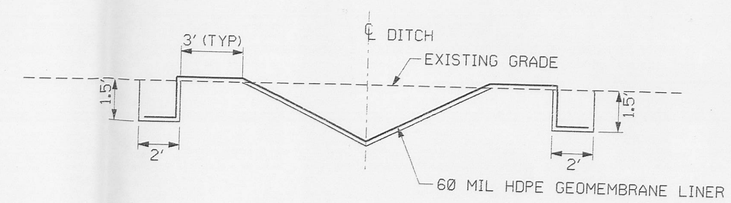

NOTE:
BACKFILL ANCHOR TRENCH WITH CL MATERIAL AND COMPACT TO 95% STANDARD PROCTOR (ASTM D698).

ANCHOR TRENCH DETAIL (6 G0023) REF G0012
V - DITCH (TYP)
NTS

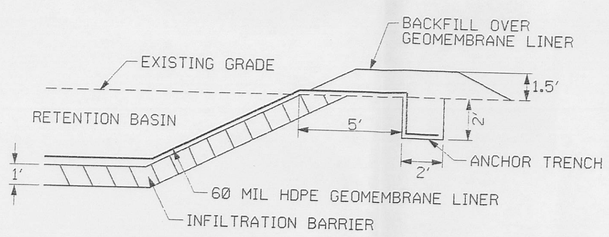

NOTE:
BACKFILL ANCHOR TRENCH WITH CL MATERIAL AND COMPACT TO 95% STANDARD PROCTOR (ASTM D698).

ANCHOR TRENCH DETAIL (7 G0023) REF G0009 G0010 G0011
RETENTION BASIN (TYP)
NTS

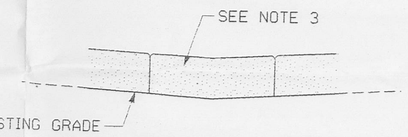

FRONT VIEW

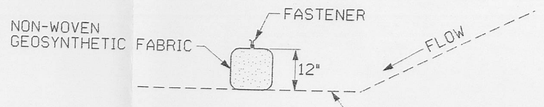

SIDE VIEW

NOTES:
1. LENGTH OF INDIVIDUAL SILT BERM MAY VARY AS REQUIRED FOR HANDLING
2. WHERE TWO ENDS OF SILT BERM MEET OVERLAP 1 FOOT MIN.
3. #57 STONE, ODOT ITEM 703.01

SILT BERM DETAIL (8 G0023)
NTS

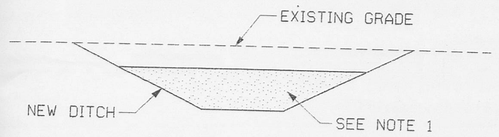

FRONT VIEW

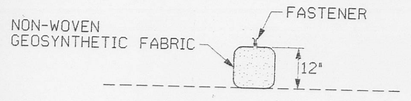

SIDE VIEW

NOTES:
1. #57 STONE, ODOT ITEM 703.01

SEDIMENT BARRIER DETAIL (9 G0023) REF G0005
NTS

NOTES

RELATED DWG NO.	DRAWING TITLE	SHEET NO.
92X-5900-X-00320	DRAWING INDEX	X0002
92X-5900-X-00321	LEGEND AND GENERAL NOTES	X0003
92X-5900-G-00282	SITE PLAN	G0005
92X-5900-G-00390	SITE PLAN - PADDYS RUN AREA	G0008
92X-5900-G-00303	ENLARGEMENT RETENTION BASIN #1	G0009
92X-5900-G-00371	ENLARGEMENT RETENTION BASIN #2	G0010
92X-5900-G-00372	ENLARGEMENT RETENTION BASIN #3	G0011
92X-5900-G-00311	EROSION AND SEDIMENT CONTROL - SHEET 1 OF 2	G0012

000026

REV. NO.	ISSUE OR REVISION PURPOSE - DESCRIPTION	A-E	FERMCO	DATE
0	CERTIFIED FOR CONSTRUCTION	JMW	N/A	6/13/97

INITIALS AND DATE

UNITED STATES DEPARTMENT OF ENERGY
FERNALD ENVIRONMENTAL MANAGEMENT PROJECT

THIS DRAWING PREPARED BY
PARSONS
THE RALPH M. PARSONS CO. - PARSONS MAIN, INC. - ENGINEERING-SCIENCE, INC.
CINCINNATI, OHIO

PROJECT NAME
WASTE UNITS REMEDIATION
SOUTHERN WASTE UNITS - SITE PREPARATION PACKAGE

DRAWING TITLE
CIVIL
MISCELLANEOUS DETAILS
SHEET 3 OF 3

DRAWN BY	DATE	LEAD ENGINEER	DATE	CHECKED BY	DATE
D.R. FOX	05/22/97		6/13/97	TIM BROWN	6/6/97

PLANT/BLDG. NO.	FLOOR	SCALE	CLASS
		NONE	

SUBMITTED FOR APPROVAL	FERMCO CRU APPROVAL	FERMCO PROJECT NO.
A-E DATE 6/13/97	N/A DATE	20400

DOE PROJECT NO.	FEMP PROJECT NO.	DRAWING INDEX CODE NO.	SHEET NO.	REV. NO.
	WBS 1.1.1.1.2.3.6			

PREPARED UNDER PARSONS PROJECT ORDER NUMBER
SCEP/P016F

STATE OF OHIO
FRANKLIN M. PARTON, JR.
NO. E-57614
REGISTERED PROFESSIONAL ENGINEER
6/13/97

NOTES

1. UTILITY LOCATIONS ARE APPROXIMATE. INSPECT THE WORK AREA PRIOR TO CONSTRUCTION AND STARTING WORK AND NOTIFY FDF OF ANY DISCREPANCIES IN WRITING.
2. STRIP TOP 6 INCHES OF TOPSOIL AND STOCKPILE ON SITE. PROVIDE EROSION AND SEDIMENT CONTROL FOR STOCKPILE.
3. EXCAVTE MAXIMUM OF 5' OF DEPTH FOR BORROW MATERIAL. MATERIAL EXCAVATED DEEPER THAN 5' OF DEPTH SHALL NOT BE USED UNLESS APPROVED BY FDF.
4. FOR SOIL BORING INFORMATION SEE GEOTECHNICAL DATA AND EVALUATION REPORT FOR EAST AND SOUTHFIELD BORROW AREAS, REVISION 0, DATED JUNE 1996.
5. PLACE NO.3 STONE, ODOT ITEM 703.01, AS SHOWN ON THE PLAN. ALL EXISTING WELLS ARE TO BE PROTECTED DURING CONSTRUCTION AND OPERATION.
6. SEE SHT G0012 FOR DETAILS AND INVERT ELEVATIONS OF DITCHES.
7. CONSTRUCT SPILLWAY WITH 12' WIDE BOTTOM WIDTH, 3H:1V SIDE SLOPES. LINE SPILLWAY WITH 8 oz. NON-WOVEN GEOTEXTILE. INSTALL 1.5' THICK (MINIMUM) DUMPED ROCK FILL ON TOP OF GEOTEXTILE TO FINISH GRADE. DUMPED ROCK FILL SHALL BE O.D.O.T. ITEM 601.07, TYPE "C" DUMPED ROCK FILL.
8. BORROW AREA HAS BEEN PREVIOUSLY CERTIFIED BY FDF. CONSTRUCTION EQUIPMENT TO BE USED WITHIN BORROW AREA SHALL BE APPROVED BY FDF PRIOR TO ENTRANCE INTO CERTIFIED AREA. VEHICLES USED FOR HAULING BORROW MATERIAL TO CONSTRUCTION AREAS SHALL NOT CROSS INTO THE CERTIFICATION UNIT. BORROW MATERIAL SHALL BE LOADED INTO THE HAUL VEHICLES ACROSS THE CERTIFICATION LIMIT. CONSTRUCTION EQUIPMENT TO BE USED FOR LOADING THE HAUL VEHICLES SHALL NOT CROSS THE CERTIFICATION LIMIT WITH TIRES OR TRACKS.

VOID (1)
THIS DRAWING IS VOID PER DCN: 20401-001

DRAINAGE DITCHES (D), (SEE NOTE 6)

DITCH NO.	POINT	NORTHING	EASTING	DESCRIPTION/COMMENT
BA1	1	476689.2	1350061.0	BEGIN V-DITCH
BA1	2	477033.5	1349834.7	END V-DITCH
BA2	1	476769.3	1350398.2	BEGIN V-DITCH
BA2	2	477228.8	1350264.9	END V-DITCH

SEDIMENT TRAP (SD)

POINT	NORTHING	EASTING	ELEV	DESCRIPTION/COMMENT
1	477044.9	1349845.2	571.0	CORNER TRAP
2	477041.0	1349799.3	571.0	CORNER TRAP
3	477126.7	1349792.1	571.0	CORNER TRAP
4	477130.6	1349837.9	571.0	CORNER TRAP
5	477125.6	1349783.1	574.0	HP SPILLWAY
6	477153.3	1349717.8	572.5	END SPILLWAY

000027

RELATED DWG NO.	DRAWING TITLE	SHEET NO.
92X-5900-X-00320	DRAWING INDEX	X0002
92X-5900-X-00321	LEGEND AND GENERAL NOTES	X0003
92X-5900-G-00368	EROSION AND SEDIMENT CONTROL - SHEET 2 OF 2	G0013
92X-5900-G-00452	MISCELLANEOUS DETAILS - SHEET 3 OF 3	G0023

REV. NO.	ISSUE OR REVISION PURPOSE - DESCRIPTION	A-E	FERMCO	DATE
1	VOID DRAWING PER DCN: 20401-001	JMU	N/A	8/21/97
0	CERTIFIED FOR CONSTRUCTION	JMU	N/A	6/13/97

INITIALS AND DATE

UNITED STATES DEPARTMENT OF ENERGY
FERNALD ENVIRONMENTAL MANAGEMENT PROJECT

THIS DRAWING PREPARED BY
PARSONS
THE RALPH M. PARSONS CO. - PARSONS MAIN, INC. - ENGINEERING-SCIENCE, INC.
CINCINNATI, OHIO

PROJECT NAME
WASTE UNITS REMEDIATION
SOUTHERN WASTE UNITS - SITE PREPARATION PACKAGE

DRAWING TITLE
CIVIL
SITE PLAN - BORROW AREA

DRAWN BY	DATE	LEAD ENGINEER	DATE	CHECKED BY	DATE
D. REED	06/05/97	F.M. PARTON, JR.	6/12/97		

PLANT/BLDG. NO.	FLOOR	SCALE	CLASS
		1"=50'	

SUBMITTED FOR APPROVAL	FERMCO CRU APPROVAL	FERMCO PROJECT NO.
J.M. USHER 6/13/97	N/A	20400

A-E DATE — DATE

DOC PROJECT NO.	FEMP PROJECT NO.	DRAWING INDEX CODE NO.	SHEET NO.	REV. NO.
	WBS 1.1.1.1.2.3.6 00-90701	92X-5900-G-00453	G0024	1

PREPARED UNDER PARSONS PROJECT ORDER NUMBER
SCEP/P0165

PIPING VALVES

CONFIGURATIONS FOR VALVE TYPE

ANGLE STRAIGHT 3-WAY 4-WAY

VALVE TYPES (STRAIGHT CONFIG.)

- AIR RELEASE VALVE
- AIR AND VACUUM VALVE
- BACKPRESSURE REGULATOR
- BACKFLOW PREVENTER
- BALL
- BLOWDOWN
- BUTTERFLY/DAMPER
- CHECK, SWING TYPE
- CHECK, WAFER TYPE
- DELUGE
- DIAPHRAGM
- DIFFERENTIAL PRESSURE REGULATOR
- FLOAT
- FOOT
- GATE
- GLOBE
- HOSE
- KNIFE
- NEEDLE
- PINCH
- PRESSURE REGULATOR
- PLUG
- SAFETY RELIEF
- SLIDING GATE
- STOP CHECK
- VACUUM

PIPING SEGMENT BREAKS

- CONSTRUCTION REQUIREMENTS
- INSULATION REQUIREMENTS
- PIPING MATERIAL REQUIREMENTS
- UNDERGROUND ROUTING (SHADED AREA INDICATES DIRECTION OF UNDERGROUND)

PIPING FITTINGS

- BASKET STRAINER - SINGLE
- BASKET STRAINER - DUPLEX
- CAP
- CONCENTRIC REDUCER
- CONE STRAINER
- ECCENTRIC REDUCER
- EXPANSION FLANGE
- EXPANSION JOINT
- FILTER
- FLANGE
- FLEXIBLE HOSE
- HOSE CONNECTION
- HOSE QUICK COUPLING
- MECHANICAL COUPLING
- ORIFICE
- ORIFICE UNION
- PLUG
- REDUCING FLANGE
- STEAM TRAP
- SUMP STRAINER
- TEMPORARY STRAINER
- Y-STRAINER

PIPING SYMBOLOGY

- PRIMARY PIPING
- SECONDARY PIPING
- EXISTING PIPING
- FLEXIBLE HOSE
- FUTURE PIPING
- TIE-IN POINT

EQUIPMENT SYMBOLS

- AGITATOR (MIXER)
- CENTRIFUGAL BLOWER
- (AREA NAME) DEFINED BOUNDRY
- HORIZONTAL CENTRIFUGAL PUMP
- (SYSTEM NAME) PACKAGED SYSTEM BOUNDRY
- SUBMERSIBLE TURBINE PUMP
- SUMP PUMP WITH MOTOR

PIPING LINE NUMBER FORMAT

MEDIUM CODE
NOMINAL PIPE SIZE
NOMINAL CONTAINMENT PIPE SIZE (WHERE SHOWN)
MATERIAL CODE
LINE NUMBER
INSULATION CODE

GW-6(10)"-B4-2930-ET

MEDIUM FLOW DIRECTION

ABBREVIATIONS

AC	AIR TO CLOSE
AG	AGITATOR
AO	AIR TO OPEN
ARV	AIR RELEASE VALVE
AVV	AIR AND VACUUM VALVE
AWWT	ADVANCED WASTEWATER TREATMENT
BLW	BLOWER
BTU	BRITISH THERMAL UNIT
CFM	CUBIC FEET/MINUTE
CO	CLEAN OUT
CU FT	CUBIC FEET
ECC	ECCENTRIC
EF	EXHAUST FAN
FC	FAIL CLOSED
FO	FAIL OPEN
GPH	GALLONS PER HOUR
GPM	GALLONS PER MINUTE
GV	GRAVITY VENTILATOR
HDPE	HIGH DENSITY POLYETHYLENE
IA	INSTRUMENT AIR
KW	KILOWATT
LB/HR	POUNDS PER HOUR
MATL	MATERIAL
MED	MEDIUM
MS	MIST ELIMINATOR
NC	NORMALLY CLOSED
NO	NORMALLY OPEN
PIV	POST INDICATOR VALVE
PMP	PUMP
RED	REDUCER
RH	RELATIVE HUMIDITY
SCFM	STANDARD CUBIC FEET/MINUTE
SFES	SOUTH FIELD EXTRACTION SYSTEM
SWRB	STORMWATER RETENTION BASIN
TBD	TO BE DETERMINED
TF	TOP FLAT
TNK	TANK
TYP	TYPICAL
UH	UNIT HEATER
1	SOLENOID VALVE COMMON PORT
2	SOLENOID VALVE NORM. OPEN PORT
3	SOLENOID VALVE NORM. CLOSED PORT
ID	INJECTION DEMONSTRATION
SPO	SOUTH PLUME OPTIMIZATION

PIPING SPECIFICATIONS

FLOWING MEDIUM	MED. CODE	MATL. CODE
BACK WASH	BW	T
BLOWER AIR	BA	A
CHILLED WATER	CHS, CHR	A
CHLORINE	CL	B1
CONDENSATE	LC	W, T
CONDENSER WATER	CWS, CWR	A
COOLING WATER	WS, WR	A
DRAIN	DR	A, T
DRINKING WATER	DW	W, B4, C1
FILTRATE EFFLUENT	FT	A
FLOCCULANT	FL	A
FLUSH WATER	FW	T
FORCE MAIN	FM	M
GROUND WATER	GW	A, B, B4, M
INSTRUMENT AIR	IA	T
MELTER OFF-GAS	OG	T
NITRIC ACID	AN	T1
PERCHED GND WATER	PGW	B
PHOSPHORIC ACID	PAPH	T1
PLANT AIR	PA	W
POLISHED WATER	PW	A
PROCESS WATER	TW, TWX1	A, B4
PROCESS WASTEWATER	CE	A
RAW WATER	RW	A
RECYCLE WATER	RC	T, B2
SCRUBBER RECYCLE	RSL	T
SLURRY	SL	T
SODIUM CARBONATE	SC	A
SODIUM HYDROXIDE	NA	T
SODIUM SILICATE	SS	A
STORM WATER	ST	A, A7, B4
SULFURIC ACID	SB	T1
SUMP DISCHARGE	SU	T
THICKENER OVERFLOW	TO	T
VACUUM	V	A
VENTILATION AIR	VE	T, A
WASTE WATER	WW	T, B4

MATL. CODE	DESCRIPTION
A	A53 SEAMLESS CARBON STEEL
A7	CORRUGATED METAL PIPE
B	PVC
B1	PVDF
B2	PVDF, 100PSI
B3	CPVC
B4	HDPE
B5	CORRUGATED HDPE
C1	CLASS 150, COPPER TUBING
L	FIBERGLASS REINFORCED PLASTIC
M	DUCTILE IRON
T	304L, STAINLESS STEEL
T1	316L, STAINLESS STEEL
W	A53, GR, A, GALVANIZED STEEL

INSUL. CODE	DESCRIPTION
ET	ELECTRIC TRACED AND INSULATED
IC	ANTI-CONDENSATION INSULATION
ST	STEAM TRACED AND INSULATED

NOTES

RELATED DWG NO.	DRAWING TITLE	SHEET NO.
92X-5900-X-00320	DRAWING INDEX	X0002

000028

REV. NO.	ISSUE OR REVISION PURPOSE - DESCRIPTION	A-E	FERMCO	DATE
0	CERTIFIED FOR CONSTRUCTION	JMM	N/A	6/13/97

INITIALS AND DATE

INSTRUMENT ACTUATOR LABELS

- BALL FLOAT
- CAPACITY SENSOR
- DIAPHRAGM
- DISPLACING FLOAT
- DUAL ACTION PISTON
- DUAL SOLENOID
- MANUAL
- MOTOR
- PILOT
- SINGLE ACTION PISTON
- SINGLE SOLENOID
- SINGLE SOLENOID WITH RESET

INSTRUMENT DEVICE TAG TYPES

- XX 000 — IN-LINE TAG WITH LEADER LINE
- XX 000 — LOCAL MOUNTED DEVICE
- XX 000 — FRONT OF PANEL MOUNTED DEVICE
- XX 000 — FRONT OF PANEL MOUNTED DEVICE AUXILLARY LOCATION
- XX 000 — REAR OF PANEL MOUNTED DEVICE
- XX 000 — REAR OF PANEL MOUNTED DEVICE AUXILLARY LOCATION
- XX 000 — SHARED DISPLAY COMPUTER CONTROL AND OPERATOR INTERFACE

EXAMPLE OF TAG CALLOUTS

FCV C1230

- INSTRUMENT TAG TYPE
- LETTERS OF INSTRUMENT IDENT.
- LOOP NUMBER SUFFIX
- LOOP NUMBER
- SPECIAL DESIGNATION

MISC. INSTRUMENTATION SYMBOLS

- INTERLOCK
- DIAPHRAGM SEAL
- TA — INSTRUMENT AIR SUPPLY

INSTRUMENT IN-LINE DEVICES

- AVERAGING PITOT
- FLOW NOZZLE
- FLUME
- M — MAGNETIC FLOW METER
- ORIFICE PLATE
- POSITIVE DISPLACEMENT
- PROPELLER
- STRAIGHTING VANE
- SILENCER
- THERMOWELL
- T — TRAP
- ULTRASONIC FLOW METER
- FI 000 — VARIABLE AREA FLOW METER
- VENTURI
- VORTEX SHEDDING FLOW METER
- WEIR

INSTRUMENT SIGNAL LINES

- CONNECT TO PROCESS
- MECHANICAL LINK
- ELECTRIC BINARY
- PNEUMATIC BINARY
- GUIDED ELECTROMAG OR SONIC
- SOFTWARE/DATA LINK
- CAPILLARY
- ELECTRIC
- PNEUMATIC
- HYDRAULIC
- UNGUIDED ELECTROMAG OR SONIC
- UNDEFINED

INSTRUMENT SPECIAL DESIGNATIONS

DESIGNATION	FUNCTION / ABBREVATION
C	CLOSED
DIF	DIFFERENTIAL
EX	EXISTING INSTRUMENTATION
H	HIGH
HH	HIGH HIGH
HL	HIGH LOW
HOA	HAND-OFF-AUTO
IA	IN-AUTO
I/I	CURRENT TO CURRENT
I/O	INPUT/OUTPUT
I/P	CURRENT TO PNEUMATIC TREANSDUCER
L	LOW
LL	LOW LOW
LOR	LOCAL-OFF-REMOTE
O	OPEN
OA	ON-OFF
OCA	OPEN-CLOSED-AUTO
R	RUNNING
Y	UNDETERMINED COMPUTING RELAY

LETTERS OF INSTRUMENT IDENTIFICATION

LETTER	1ST LETTER	2ND LETTER	3RD OR 4TH LETTER
	MEASURED OR INITIATING VARIABLE	MODIFIER	READ OUT OR PASSIVE FUNCTION
A	ANALYSIS	ALARM	ALARM
B	BURNER FLAME	----	----
C	CAMERA	CONTROLLER	CLOSED
D	DENSITY	DIFFERENTIAL	----
E	VOLTAGE	ELEMENT	ELEMENT
F	FLOW RATE	RATIO (FRACTION)	----
G	GAGING (DIM)	VIEWING DEVICE	GLASS
H	HAND (MANUAL)	----	----
I	CURRENT (ELEC)	INDICATE	INDICATE
J	POWER	SCAN	----
K	TIME	----	----
L	LEVEL	LIGHT	LOW
M	MOIST. OR HUMIDITY	----	----
N	----	----	----
O	OBSERVATION	ORIFICE	OPEN
P	PRESSURE OR VACUUM	----	POINT (TEST)
Q	QUANTITY OR EVENT	TOTALIZER	----
R	RESTRICTIVE	RECORDER	RECORDER
S	SPEED OR FREQUENCY	SAFETY/SWITCH	SWITCH
T	TEMPERATURE	TRANSMITTER	TRANSMITTER
U	USER'S GUIDE	----	MULTIFUNCTION
V	VISCOSITY	----	VENT, VALVE
W	WEIGHT OR FORCE	WELL	----
X	UNCLASSIFIED	----	UNCLASSIFIED
Y	RELAY	RELAY	----
Z	POSITION	----	----

FUNCTION LABELS

SYMBOLS	DESCRIPTION
%/%	AVERAGING
−	BIAS MINUS
+	BIAS PLUS
±	BIAS PLUS/MINUS
d/dt	DERIVATIVE
÷	DIVIDING
∫	INTERGAL
X	MULTIPLYING
K	PROPORTIONAL
X^n	RAISE TO POWER
REV	REVERSE ACTION
$\sqrt{}$	ROOT EXTRACT
Σ	SUMMING

STATE OF OHIO — OSCAR W. CARLSON, JR. 60196 — REGISTERED PROFESSIONAL ENGINEER

Oscar W. Carlson Jr. 5-19-97

PREPARED UNDER PARSONS PROJECT ORDER NUMBER: SCEP/P0165

UNITED STATES DEPARTMENT OF ENERGY
FERNALD ENVIRONMENTAL MANAGEMENT PROJECT

THIS DRAWING PREPARED BY

PARSONS

THE RALPH M. PARSONS CO. - PARSONS MAIN, INC. - ENGINEERING-SCIENCE, INC.
CINCINNATI, OHIO

PROJECT NAME: WASTE UNITS REMEDIATION
SOUTHERN WASTE UNITS - SITE PREPARATION PACKAGE

DRAWING TITLE: MECHANICAL PROCESS PIPING AND INSTRUMENTATION DIAGRAM SYMBOLS AND LEGEND

DRAWN BY	DATE	LEAD ENGINEER	DATE	CHECKED BY	DATE
L. N. HAGAMAN	12/01/96	R. W. Carlson	5/19/97	K. D. MORRIS	03/25/96

PLANT/BLDG. NO. — FLOOR — SCALE: NONE — CLASS

SUBMITTED FOR APPROVAL — DATE 6/13/97 — FERMCO CRU APPROVAL: N/A — DATE — FERMCO PROJECT NO.: 20400

DOE PROJECT NO.	FERMCO PROJECT NO.	DRAWING INDEX CODE NO.	SHEET NO.	REV. NO.
	WBS 1.1.1.1.2.3.6 00-90701	92X-5900-N-00295	N0001	0

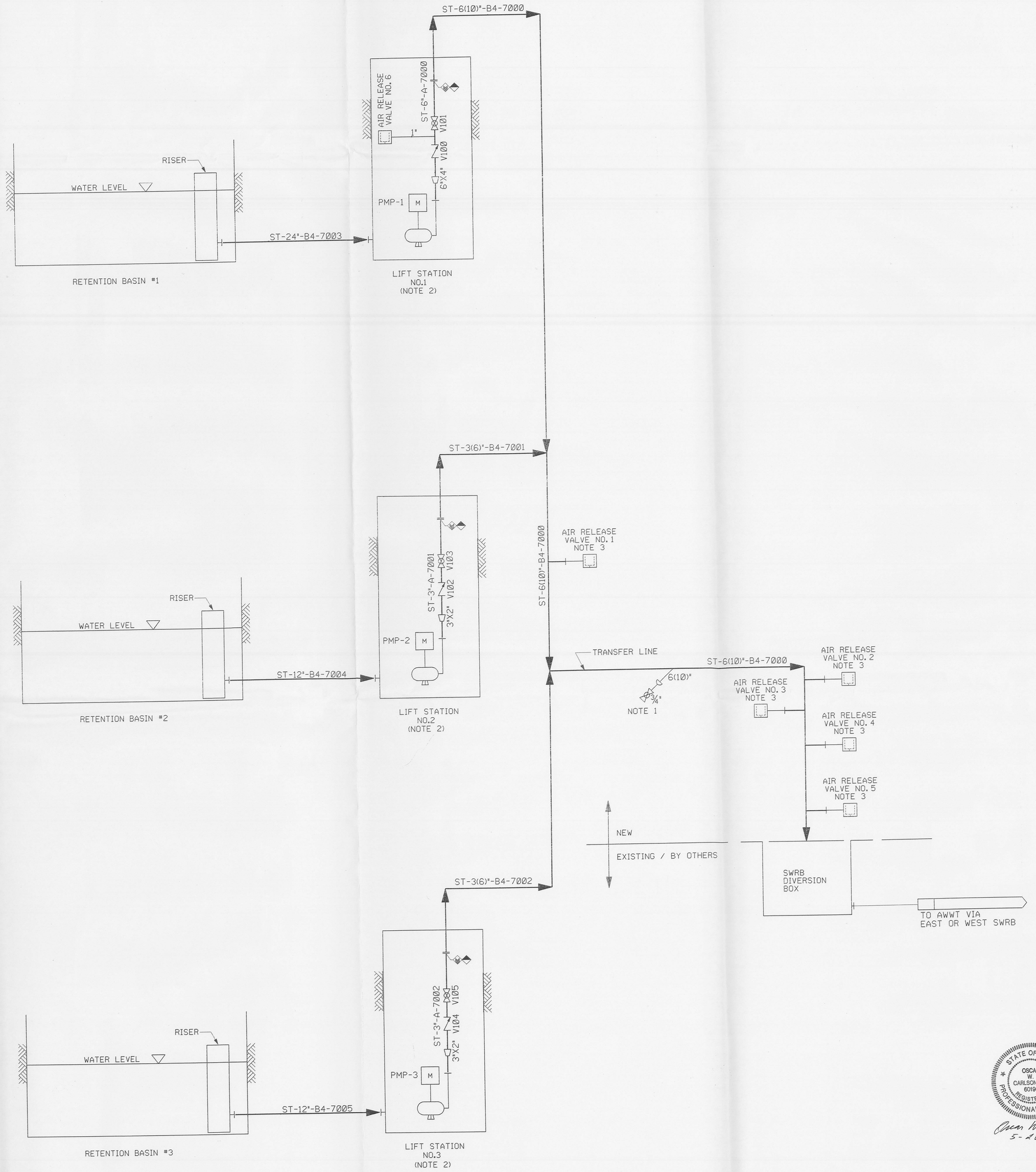

NOTES

1. TYPICAL DETAIL FOR CLEANOUT. THERE ARE 4 CLEANOUTS IN THE UNDERGROUND LINE TO SWRB. SEE CIVIL SHEET NO. G0020. VALVES V106-V109 ARE IN THE CLEANOUTS.
2. REFER TO SHEET NO. E0007 FOR LIFT STATION AUTOMATIC LEVEL CONTROLS.
3. SEE CIVIL SHEET NO. G0020 FOR DETAILS.

LAST VALVE No.	V109

RELATED DWG NO.	DRAWING TITLE	SHEET NO.
92X-5900-X-00320	DRAWING INDEX	X0002
92X-5900-N-00295	SYMBOLS AND LEGEND	N0001
92X-5900-E-00380	ELECTRICAL - ELEMENTARY DIAGRAMS	E0007
92X-5900-G-00309	CIVIL - MISCELLANEOUS DETAILS	G0020

000029

REV. NO.	ISSUE OR REVISION PURPOSE - DESCRIPTION	A-E	FERMCO	DATE
0	CERTIFIED FOR CONSTRUCTION	JMM	N/A	6/13/97

INITIALS AND DATE

UNITED STATES DEPARTMENT OF ENERGY
FERNALD ENVIRONMENTAL MANAGEMENT PROJECT

THIS DRAWING PREPARED BY
PARSONS
THE RALPH M. PARSONS CO. - PARSONS MAIN, INC. - ENGINEERING-SCIENCE, INC.
CINCINNATI, OHIO

PROJECT NAME
WASTE UNITS REMEDIATION
SOUTHERN WASTE UNITS - SITE PREPARATION PACKAGE

DRAWING TITLE
MECHANICAL PROCESS
PIPING AND INSTRUMENTATION DIAGRAM
WASTEWATER COLLECTION AND TRANSFER

DRAWN BY	DATE	LEAD ENGINEER	DATE	CHECKED BY	DATE
P. A. WILSON	03/04/96	O.W. Carlson	5/28/97	K. D. MORRIS	03/25/96

PLANT/BLDG. NO.	FLOOR	SCALE	CLASS
		NONE	

SUBMITTED FOR APPROVAL	FERMCO CRU APPROVAL	FERMCO PROJECT NO.
A-E JMM DATE 6/13/97	N/A DATE	20400

STATE OF OHIO OSCAR W. CARLSON, JR. 60196 REGISTERED PROFESSIONAL ENGINEER
Oscar W. Carlson, Jr. 5-28-97

PREPARED UNDER PARSONS PROJECT ORDER NUMBER	DOE/PROJECT NO.	FEMP PROJECT NO.	DRAWING INDEX CODE NO.	SHEET NO.	REV. NO.
SCEP/P0165		WBS 1.1.1.1.2.3.6 00-90701	92X-5900-N-00290	N0002	0

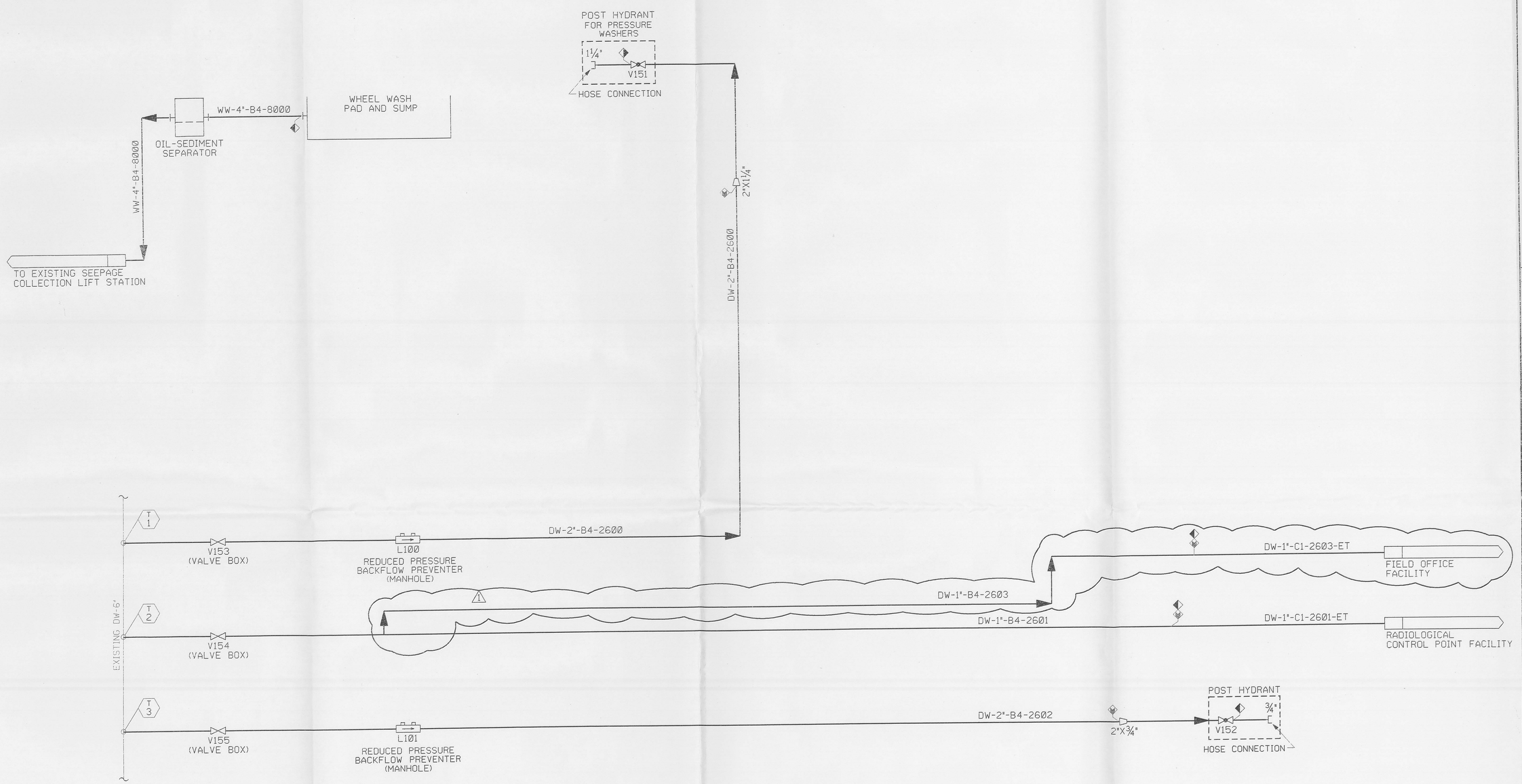

NOTES

LAST VALVE No.	V155

RELATED DWG NO.	DRAWING TITLE	SHEET NO.
92X-5900-X-00320	DRAWING INDEX	X0002
92X-5900-N-00295	SYMBOLS AND LEGEND	N0001

000039

REV. NO.	ISSUE OR REVISION PURPOSE - DESCRIPTION	A-E	FERMCO	DATE
1	REVISION PER DCN:20401-006	JMU	N/A	8/29/97
0	CERTIFIED FOR CONSTRUCTION	JMU	N/A	06/13/97

INITIALS AND DATE

UNITED STATES DEPARTMENT OF ENERGY
FERNALD ENVIRONMENTAL MANAGEMENT PROJECT

THIS DRAWING PREPARED BY
PARSONS
THE RALPH M. PARSONS CO. - PARSONS MAIN, INC. - ENGINEERING-SCIENCE, INC.
CINCINNATI, OHIO

PROJECT NAME
WASTE UNITS REMEDIATION
SOUTHERN WASTE UNITS - SITE PREPARATION PACKAGE

DRAWING TITLE
MECHANICAL PROCESS
PIPING AND INSTRUMENTATION DIAGRAM
DRINKING WATER SYSTEM

DRAWN BY	DATE	LEAD ENGINEER	DATE	CHECKED BY	DATE
P. A. WILSON	03/01/96	O. W. CARLSON	05/19/97	K. D. MORRIS	03/25/96

PLANT/BLDG. NO.	FLOOR	SCALE	CLASS
		NONE	

SUBMITTED FOR APPROVAL	FERMCO CRU APPROVAL	FERMCO PROJECT NO.
MIKE USHER 06/13/97	N/A	20400

A-E DATE

DOE PROJECT NO.	FEMP PROJECT NO.	DRAWING INDEX CODE NO.	SHEET NO.	REV. NO.
	WBS 1.1.1.1.2.3.6 00-90701	92X-5900-N-00291	N0003	1

PREPARED UNDER PARSONS PROJECT ORDER NUMBER
SCEP/P0165

STATE OF OHIO
OSCAR W. CARLSON, JR.
60196
REGISTERED
PROFESSIONAL ENGINEER
8-25-97

SINGLE LINE DIAGRAM SYMBOLS

ARRESTER	YY-XXXX	"YY" INDICATES SPECIAL IDENTIFIER "XXXX" INDICATES ID NO.
CIRCUIT BREAKER, LOW VOLTAGE	FFFF TTTT	"FFFF" INDICATES FRAME RATING AMPS (SHOWN ON SWITCHGEAR ONLY) "TTTT" INDICATES TRIP RATING AMPS
FUSED SWITCH	FFFF	"FFFF" INDICATES FUSE SIZE
CURRENT TRANSFORMER	YY ZZZZ	"YY" INDICATES NO. OF CT(S) "ZZZZ" INDICATES CT RATIO(S)
DISCONNECT SWITCH	FFFF	"FFFF" INDICATES FRAME RATING AMPS
FUSED DISCONNECT SWITCH	FFFF TTTT	"FFFF" INDICATES FRAME RATING AMPS "TTTT" INDICATES TRIP RATING AMPS
FUSE	XXXX YY TTTT	"XXXX" INDICATES ID NO. "YY" INDICATES SPECIAL IDENTIFIER "TTTT" INDICATES TRIP RATING AMPS
LOAD, NON-MOTOR	ZZZ ZZZ	"ZZZ" INDICATES EQUIPMENT SIZE IN KVA OR KW
MOTOR	ZZZ HP	"ZZZ" INDICATES HORSEPOWER SIZE
MOTOR OVERLOAD RELAY		
MOTOR STARTER CONTACT	ZZ	"ZZ" INDICATES NEMA SIZE
SYMBOL 3 PHASE DELTA		
SYMBOL, 3 PHASE WYE GROUNDED		
WELDING/POWER RECEPTACLE		
TRANSFORMER	XXXX ZZZZ	"XXXX" INDICATES ID NO. "ZZZZ" INDICATES TRANSFORMER RATINGS - KVA, 1 OR 3 PHASE, VOLTAGE RATIO, IMPEDANCE
LIGHT		DESCRIPTION INDICATES WATTS AND VOLTAGE

PLOT PLAN SYMBOLS

480V POWER LINE (EXISTING)	
480V POWER LINE (NEW)	
13.2 kV POWER LINE	
EXISTING POWER POLE	
NEW POWER POLE	
GUY WIRE	
DUCT BANK	

ABBREVIATIONS

ACSR	ALUMINUM CONDUCTOR STEEL REINFORCED
MESS.	MESSENGER

ELEMENTARY DIAGRAM SYMBOLS

CIRCUIT BREAKER	TTTT	"TTTT" INDICATES TRIP RATING AMPS
CONTACT	YY-XXXX	NORMALLY OPEN, CLOSES WHEN COIL IS ENERGIZED, "XXXX" INDICATES ID NO., "YY" INDICATES SPECIAL IDENTIFIER
CONTACT	YY-XXXX	NORMALLY CLOSED, OPENS WHEN COIL IS ENERGIZED, "XXXX" INDICATES ID NO., "YY" INDICATES SPECIAL IDENTIFIER
CONTROL POWER XFMR	H1 480V H2 CPT X1 120V X2	
DISCONNECT SWITCH	FFFF	"FFFF" INDICATES FRAME RATING AMPS
FUSE	XXXX TTTT Y	"XXXX" INDICATES ID NO., "TTTT" INDICATES TRIP RATING AMPS "Y" INDICATES SPECIAL IDENTIFIER
GROUND		
MOTOR, 3 PHASE	T1 T2 T3 ZZZ HP	"ZZZ" INDICATES HP SIZE
OVERLOAD ELEMENT	OL	
PILOT LIGHT	XXXX YY	"XXXX" INDICATES ID NO., "YY" INDICATES SPECIAL IDENTIFIER
RELAY	XXXX YY	"XXXX" INDICATES ID NO., "YY" INDICATES SPECIAL IDENTIFIER
OVERLOAD CONTACT	OL	NORMALLY CLOSED, OPENS WHEN OVERLOAD RELAY(S) TRIP

WIRING BY SUBCONTRACTOR	
WIRING BY CONSTRUCTION	

SWITCHES

SELECTOR SWITCH (GENERAL)	XXXX YY ZZ (XO) (OX)	"XXXX" INDICATES ID NO. "YY" INDICATES NAME OF CURRENT SWITCH POSITION, "ZZ" INDICATES NAME OF OTHER SWITCH POSITION(S) "X" INDICATES CLOSED CIRCUIT POSITION "O" INDICATES OPEN CIRCUIT POSITION (CONTACTS DIAGRAMMATICALLY SHOWN CLOSED)
TEMPERATURE SWITCH		NORMALLY CLOSED, OPENS ABOVE SET TEMPERATURE

SPECIAL IDENTIFIERS

FC	FUSED CUTOUT
LB	LOAD BREAK
M	MOTOR RELAY
R	RED LIGHT

NOTES

RELATED DWG NO.	DRAWING TITLE	SHEET NO.
92X-5900-X-00320	DRAWING INDEX	X0002
92X-5900-E-00404	SINGLE LINE DIAGRAM WEST SIDE 13.2 kV FEEDERS	E0002
92X-5900-E-00377	SINGLE LINE DIAGRAMS/ ELEVATION LIFT STATION NO. 1, 2, & 3	E0003
92X-5900-E-00378	SINGLE LINE DIAGRAMS/ELEVATION WHEEL WASH FACILITY AND SUPPORT AREA	E0004
92X-5900-E-00379	ELEMENTARY DIAGRAMS	E0005
92X-5900-E-00380	OVERALL SITE POWER PLAN	E0007

000031

REV. NO.	ISSUE OR REVISION PURPOSE - DESCRIPTION	A-E	FERMCO	DATE
0	CERTIFIED FOR CONSTRUCTION	JWW	N/A	6/13/97

INITIALS AND DATE

UNITED STATES DEPARTMENT OF ENERGY
FERNALD ENVIRONMENTAL MANAGEMENT PROJECT

THIS DRAWING PREPARED BY
PARSONS
THE RALPH M. PARSONS CO. - PARSONS MAIN, INC. - ENGINEERING-SCIENCE, INC.
CINCINNATI, OHIO

PROJECT NAME
WASTE UNITS REMEDIATION
SOUTHERN WASTE UNITS - SITE PREPARATION PACKAGE

DRAWING TITLE
ELECTRICAL
SYMBOLS AND LEGEND

DRAWN BY	DATE	LEAD ENGINEER	DATE	CHECKED BY	DATE
T. COLLINS	01-15-97	James L Cooper	13 JUNE 97	J.L. COOPER	01-28-97

PLANT/BLDG. NO.	FLOOR	SCALE	CLASS
		NONE	

SUBMITTED FOR APPROVAL	FERMCO CRU APPROVAL	FERMCO PROJECT NO.
A-E JWW DATE 6/13/97	NA DATE	20400

STATE OF OHIO JAMES L. COOPER E-60607 REGISTERED PROFESSIONAL ENGINEER
James L Cooper 13 JUNE 1997

PREPARED UNDER PARSONS PROJECT ORDER NUMBER	DOE PROJECT NO.	FEMP PROJECT NO.	DRAWING INDEX CODE NO.	SHEET NO.	REV. NO.
SCEP/P0165		WBS 1.1.1.1.2.3.6 00-90701	92X-5900-E-00405	E0001	0

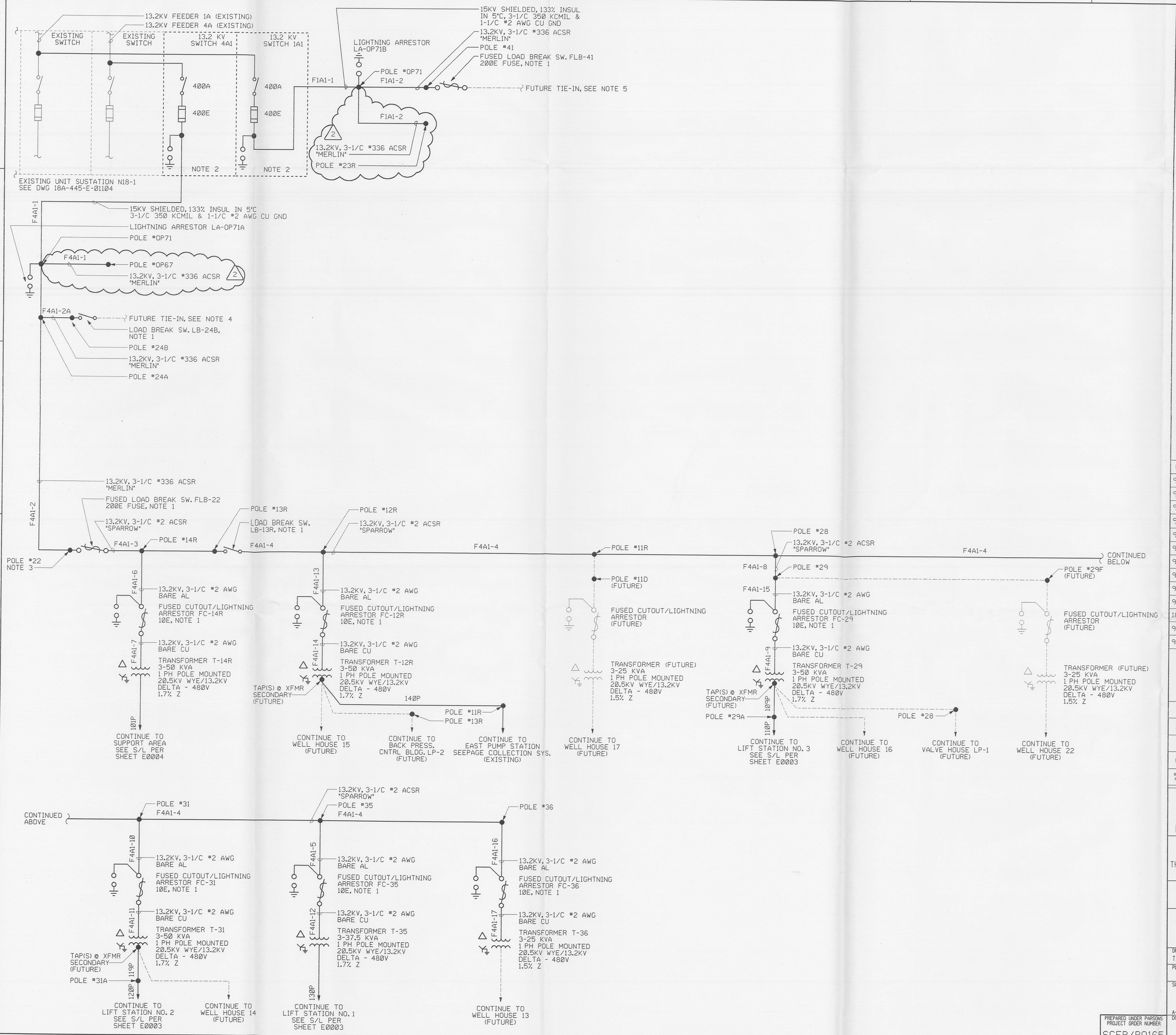

NOTES

1. ALL SWITCHES AND CUTOUTS ARE 13.2KV, 110KVBIL, 200A, 12KA SYMMETRICAL INTERRUPTING, UNLESS NOTED.
2. PRIMARY SWITCH AND CONNECTION KIT TO EXISTING SUBSTATION N18-1, AS SPECIFIED. CABLE AND BUS CONNECTIONS SHALL BE OF SUFFICIENT LENGTH TO ALLOW RECONNECTION IN THE FUTURE TO REVERSE LINE AND LOAD SIDE OF SWITCH, I.E. CABLE CONNECTION WILL BE TO LOAD SIDE. DOUBLE LUG FEEDERS WITH EXISTING LINE SIDE INCOMMING FEEDERS TO SUBSTATION N18-1 PRIMARY BUS.
3. INTERMEDIATE POLES PROVIDING SUPPORT ONLY OF OVERHEAD CONDUCTORS HAVE BEEN OMITTED FOR CLARITY.
4. FOR SOUTH PLUME INJECTION WATER SUPPLY, FOR SINGLE LINE SEE DWG #95X-5900-E-00455.
5. FOR SOUTH FIELD EXTRACTION SYSTEM, FOR SINGLE LINE SEE DWG #95X-5900-E-00477

RELATED DWG NO.	DRAWING TITLE	SHEET NO.
92X-5900-X-00320	DRAWING INDEX	X0002
92X-5900-E-00377	SINGLE LINE DIAGRAMS / ELEVATIONS - LIFT STATION NO. 1, 2, & 3	E0003
92X-5900-E-00378	SINGLE LINE DIAGRAMS / ELEVATIONS - WHEEL WASH FACILITY & SUPPORT AREA	E0004
92X-5900-E-00379	OVERALL SITE POWER PLAN	E0005
92X-5900-E-00406	CABLE AND CONDUIT SCHEDULES	E0008
92X-5900-E-00382	DETAILS - SHEET 1	E0009
92X-5900-E-00407	DETAILS - SHEET 2	E0010
92X-5900-E-00408	DETAILS - SHEET 3	E0011
92X-5900-E-00409	DETAILS - SHEET 4	E0012
92X-5900-E-00376	DETAILS - SHEET 5	E0013
18A-4445-E-01104	SWRB VALVE HOUSE SINGLE LINE	
95X-5900-E-00455	SINGLE LINE	
95X-5900-E-00477	SINGLE LINE - 13.2 KV FEEDERS	

000032

REV. NO.	ISSUE OR REVISION PURPOSE - DESCRIPTION	A-E	FERMCO	DATE
2	INCORPORATED FDF DCN #20401-015; ADDED EXTENSIONS OF F1A1-2 & F4A1-1	CG	N/A	10/13/97
1	ELECTRICAL WORK ADDED TO CONTRACT	CS	N/A	06/24/97
0	CERTIFIED FOR CONSTRUCTION	JMU	N/A	06/13/97

INITIALS AND DATE

UNITED STATES DEPARTMENT OF ENERGY
FERNALD ENVIRONMENTAL MANAGEMENT PROJECT

THIS DRAWING PREPARED BY
PARSONS
THE RALPH M. PARSONS CO. - PARSONS MAIN, INC. - ENGINEERING-SCIENCE, INC.
CINCINNATI, OHIO

PROJECT NAME
WASTE UNITS REMEDIATION
SOUTHERN WASTE UNITS - SITE PREPARATION PACKAGE

DRAWING TITLE
ELECTRICAL
SINGLE LINE DIAGRAM
WEST SIDE 13.2 KV FEEDERS

DRAWN BY	DATE	LEAD ENGINEER	DATE	CHECKED BY	DATE
T. COLLINS	01/03/97	J. L. COOPER	06/13/97	J.L. COOPER	01/28/97

PLANT/BLDG. NO.	FLOOR	SCALE	CLASS
		NONE	

SUBMITTED FOR APPROVAL	FERMCO CRU APPROVAL	FERMCO PROJECT NO.
MIKE USHER 06/13/97	N/A	20400

A-E DATE DATE

PREPARED UNDER PARSONS PROJECT ORDER NUMBER	DOE PROJECT NO.	FEMP PROJECT NO.	DRAWING INDEX CODE NO.	SHEET NO.	REV. NO.
SCEP/P0165		WBS 1.1.1.1.2.3.6 00-90701	92X-5900-E-00404	E0002	2

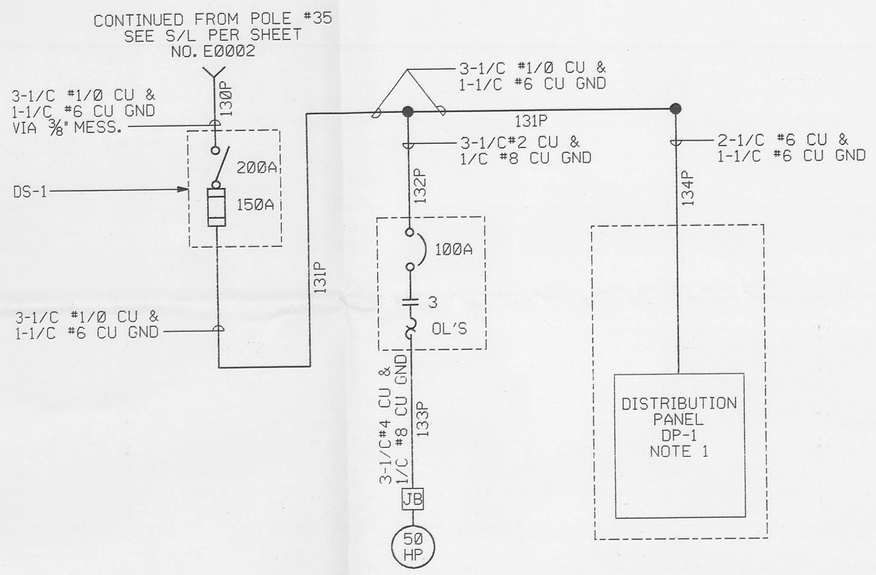

SINGLE LINE DIAGRAM

LIFT STATION NO. 1

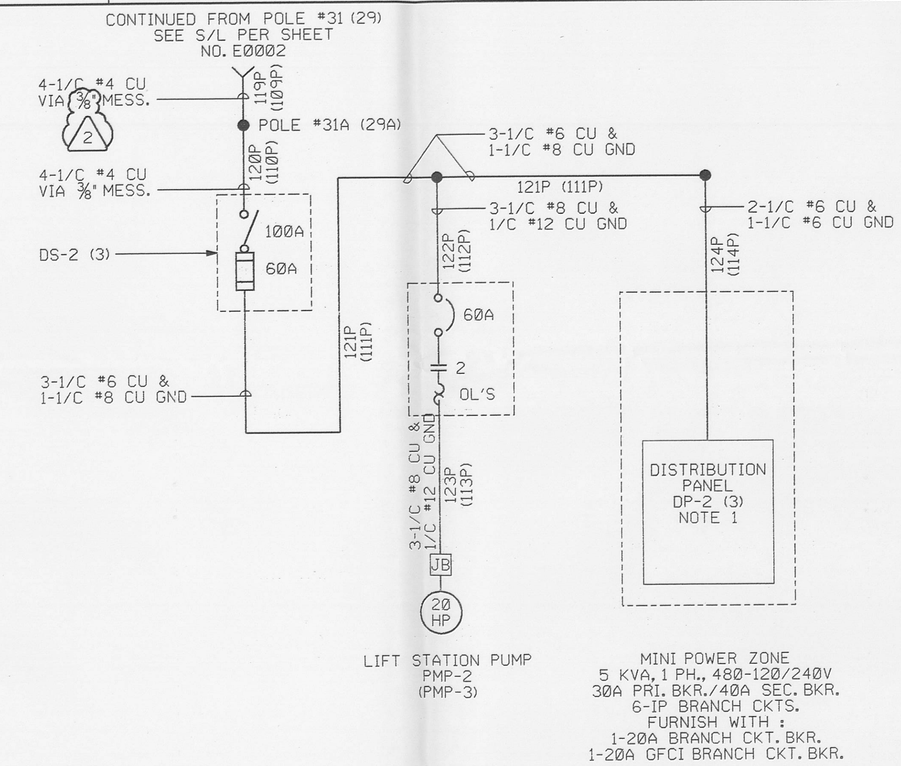

SINGLE LINE DIAGRAM

LIFT STATION NO. 2 (AND NO. 3)
(TYP.)

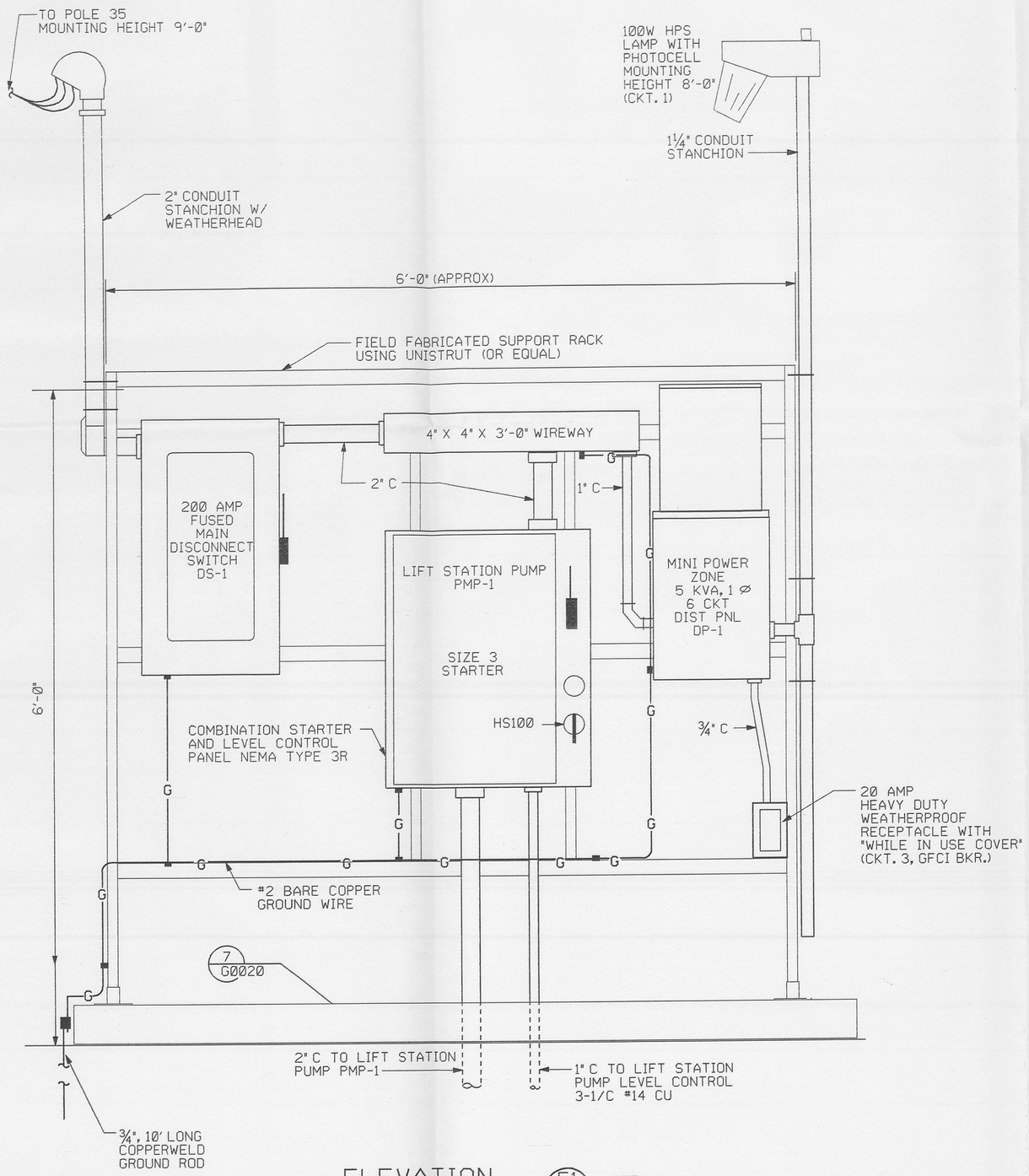

ELEVATION (E1) E0003 — REF E0005

SERVICE PANEL RACK
@ LIFT STATION NO. 1
NTS

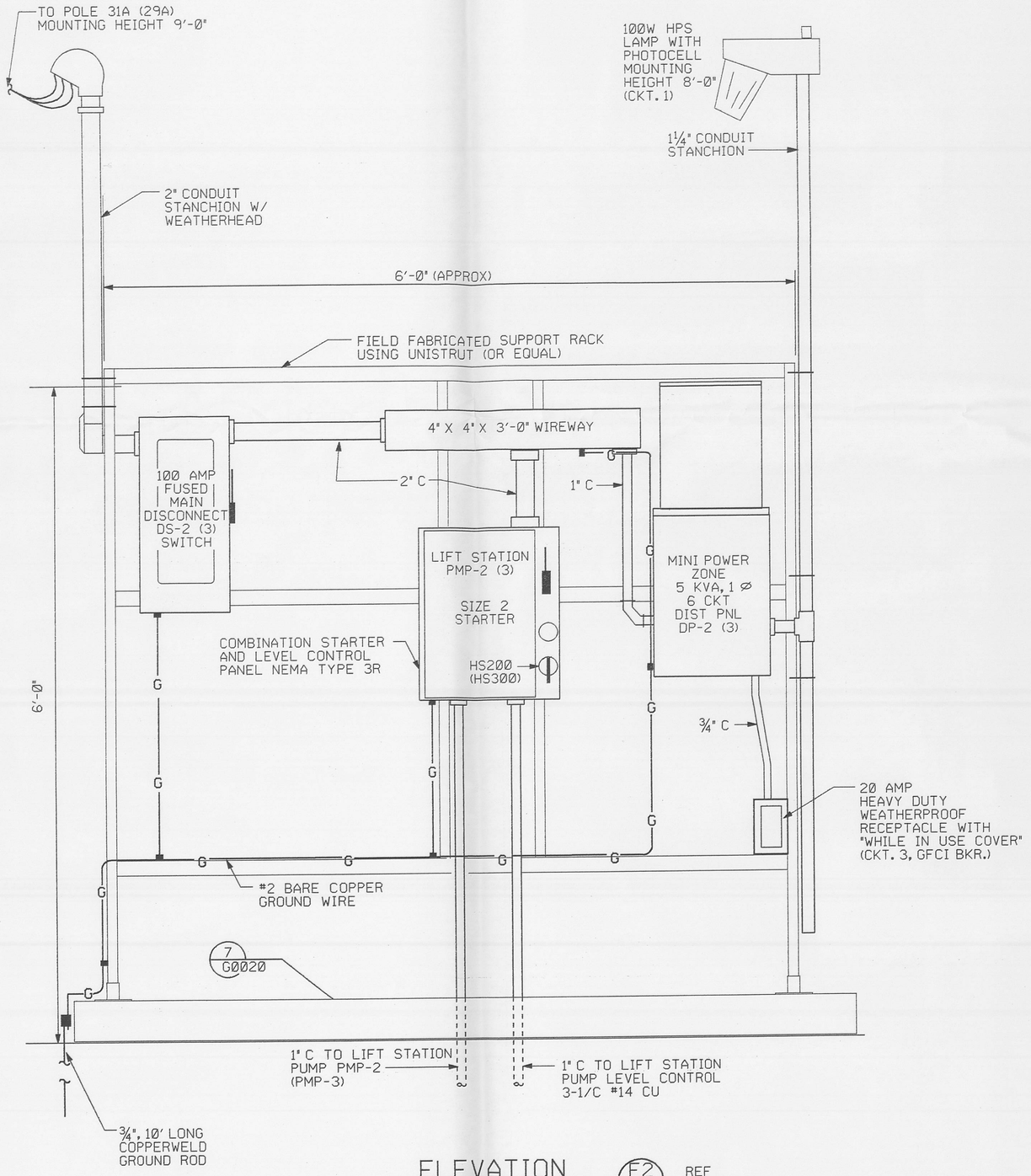

ELEVATION (E2) E0003 — REF E0005

SERVICE PANEL RACK
@ LIFT STATION NO. 2
(AND NO. 3)
NTS

NOTES

1. SEE SHEET NO. E0006 FOR PANEL SCHEDULES.
2. SEE SHEET NO. E0007 FOR ELEMENTARY DIAGRAMS.

RELATED DWG NO.	DRAWING TITLE	SHEET NO.
92X-5900-X-00320	DRAWING INDEX	X0002
92X-5900-E-00405	SYMBOLS AND LEGEND	E0001
92X-5900-E-00404	SINGLE LINE DIAGRAM - WEST SIDE 13.2 KV FEEDERS	E0002
92X-5900-E-00379	OVERALL SITE POWER PLAN	E0005
92X-5900-E-00381	PANEL SCHEDULES	E0006
92X-5900-E-00380	ELEMENTARY DIAGRAMS	E0007
92X-5900-G-00368	CIVIL - MISCELLANEOUS DETAILS	G0020

000033

REV. NO.	ISSUE OR REVISION PURPOSE - DESCRIPTION	A-E	FERMCO	DATE
2	INCORPORATED FDF DCN #20401-011; CHANGED ½" MESSENGER TO 3/8"	CS	N/A	10/13/97
1	ELECTRICAL WORK ADDED TO CONTRACT	CS	N/A	06/24/97
0	CERTIFIED FOR CONSTRUCTION	JMU	N/A	06/13/97

INITIALS AND DATE

UNITED STATES DEPARTMENT OF ENERGY
FERNALD ENVIRONMENTAL MANAGEMENT PROJECT

THIS DRAWING PREPARED BY
PARSONS
THE RALPH M. PARSONS CO. - PARSONS MAIN, INC. - ENGINEERING-SCIENCE, INC.
CINCINNATI, OHIO

PROJECT NAME
WASTE UNITS REMEDIATION
SOUTHERN WASTE UNITS - SITE PREPARATION PACKAGE

DRAWING TITLE
ELECTRICAL
SINGLE LINE DIAGRAMS / ELEVATIONS
LIFT STATION NO. 1, 2, AND 3

DRAWN BY	DATE	LEAD ENGINEER	DATE	CHECKED BY	DATE
T. COLLINS	11/16/96	J. L. COOPER	06/13/97	J. L. COOPER	11/26/96

PLANT/BLDG. NO.	FLOOR	SCALE	CLASS
		NONE	

SUBMITTED FOR APPROVAL	FERMCO CRU APPROVAL	FERMCO PROJECT NO.
MIKE USHER 06/13/97	N/A	20400
A-E DATE	DATE	

PREPARED UNDER PARSONS PROJECT ORDER NUMBER	DOE PROJECT NO.	FEMP PROJECT NO.	DRAWING INDEX CODE NO.	SHEET NO.	REV. NO.
SCEP/P0165		WBS 1.1.1.1.2.3.6 00-90701	92X-5900-E-00377	E0003	2

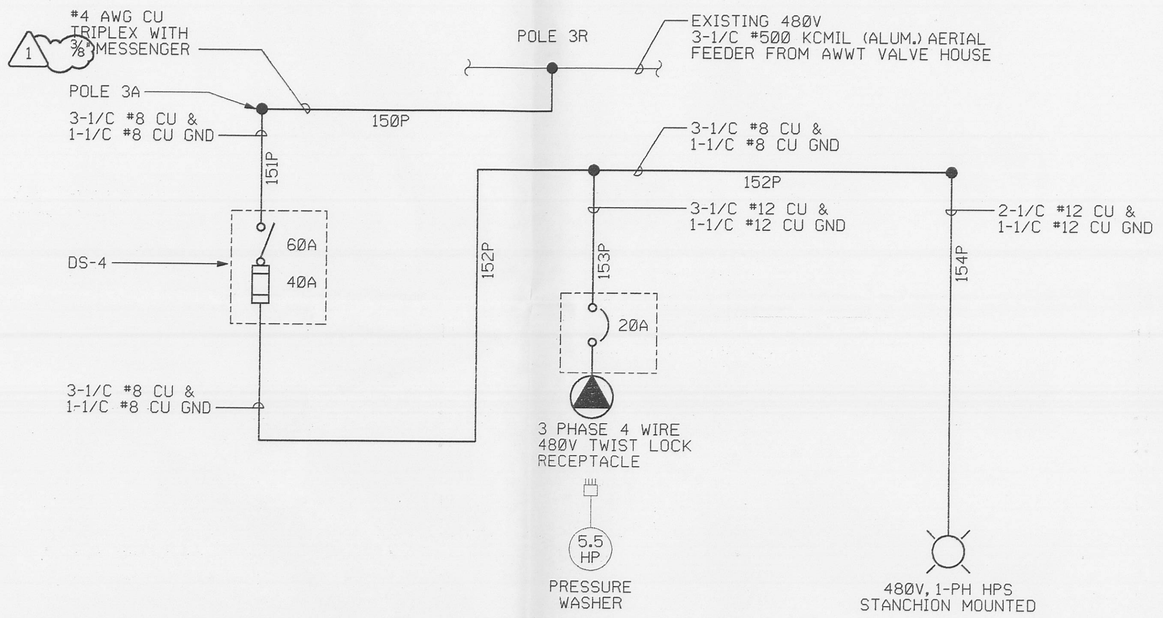

SINGLE LINE DIAGRAM
WHEEL WASH FACILITY

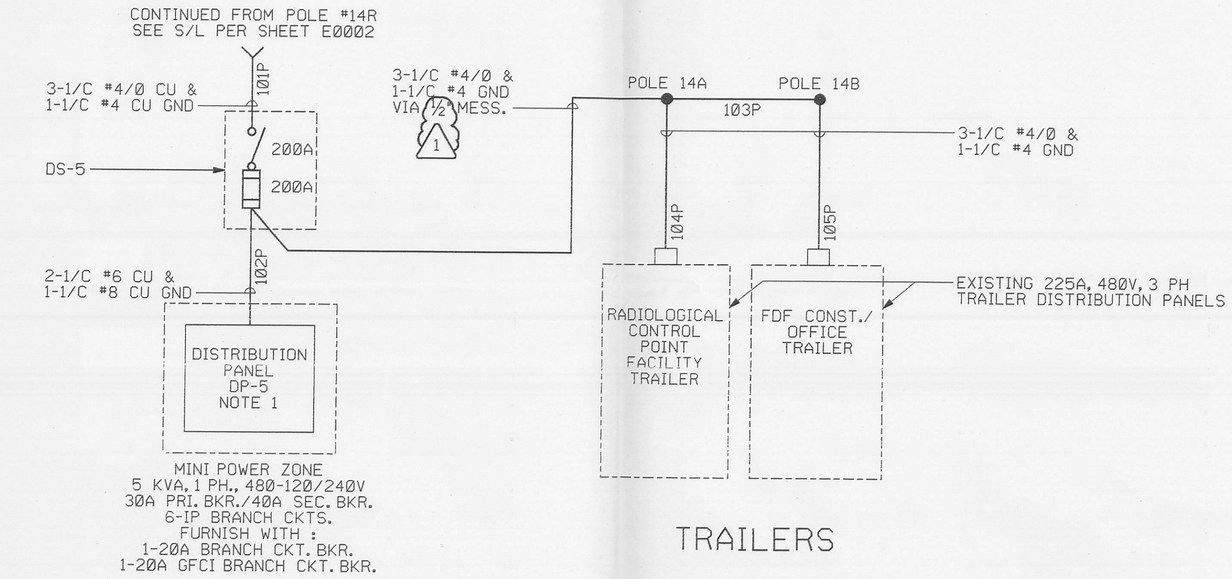

SINGLE LINE DIAGRAM
SUPPORT AREA

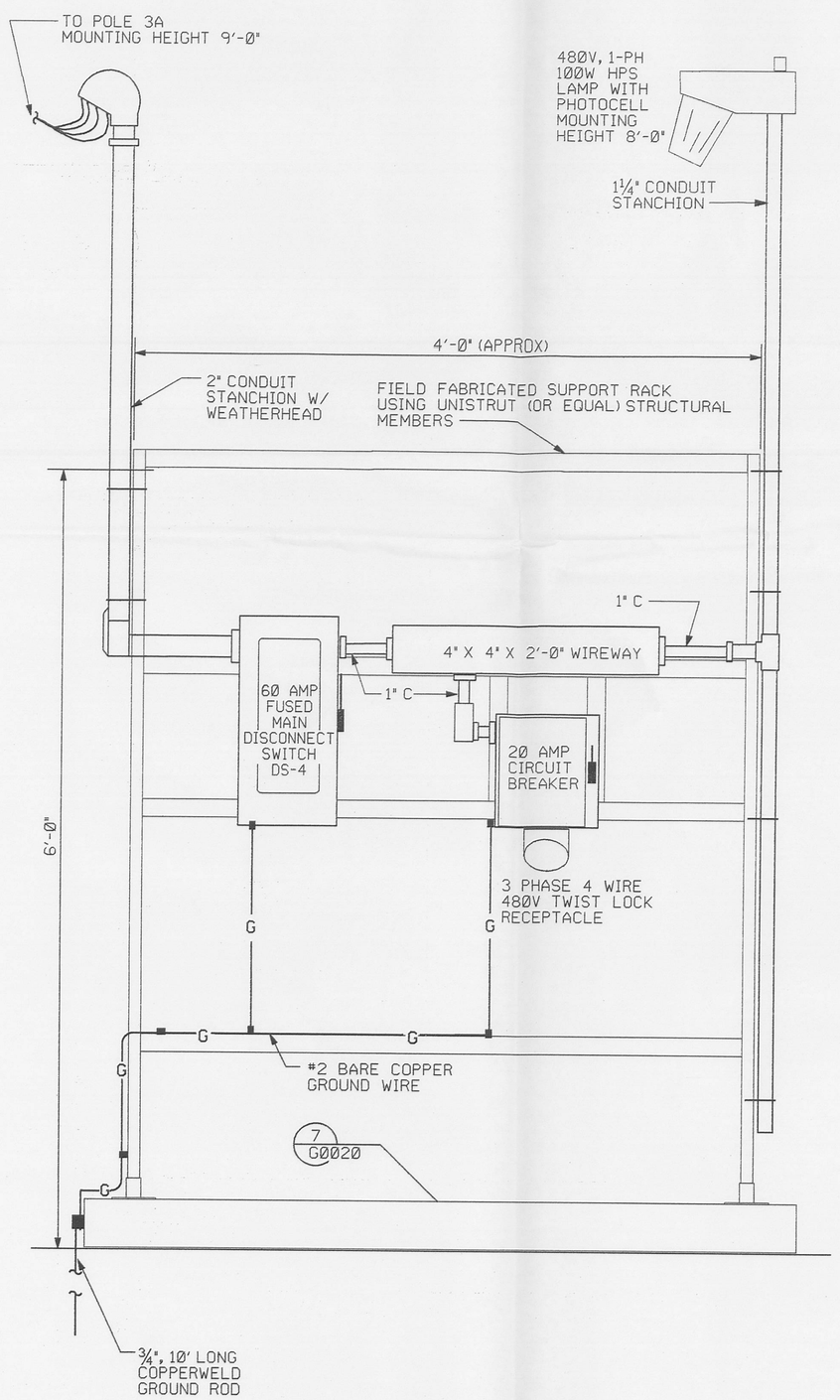

ELEVATION E3 / E0004 — REF E0005
SERVICE PANEL RACK @ WHEEL WASH FACILITY
NTS

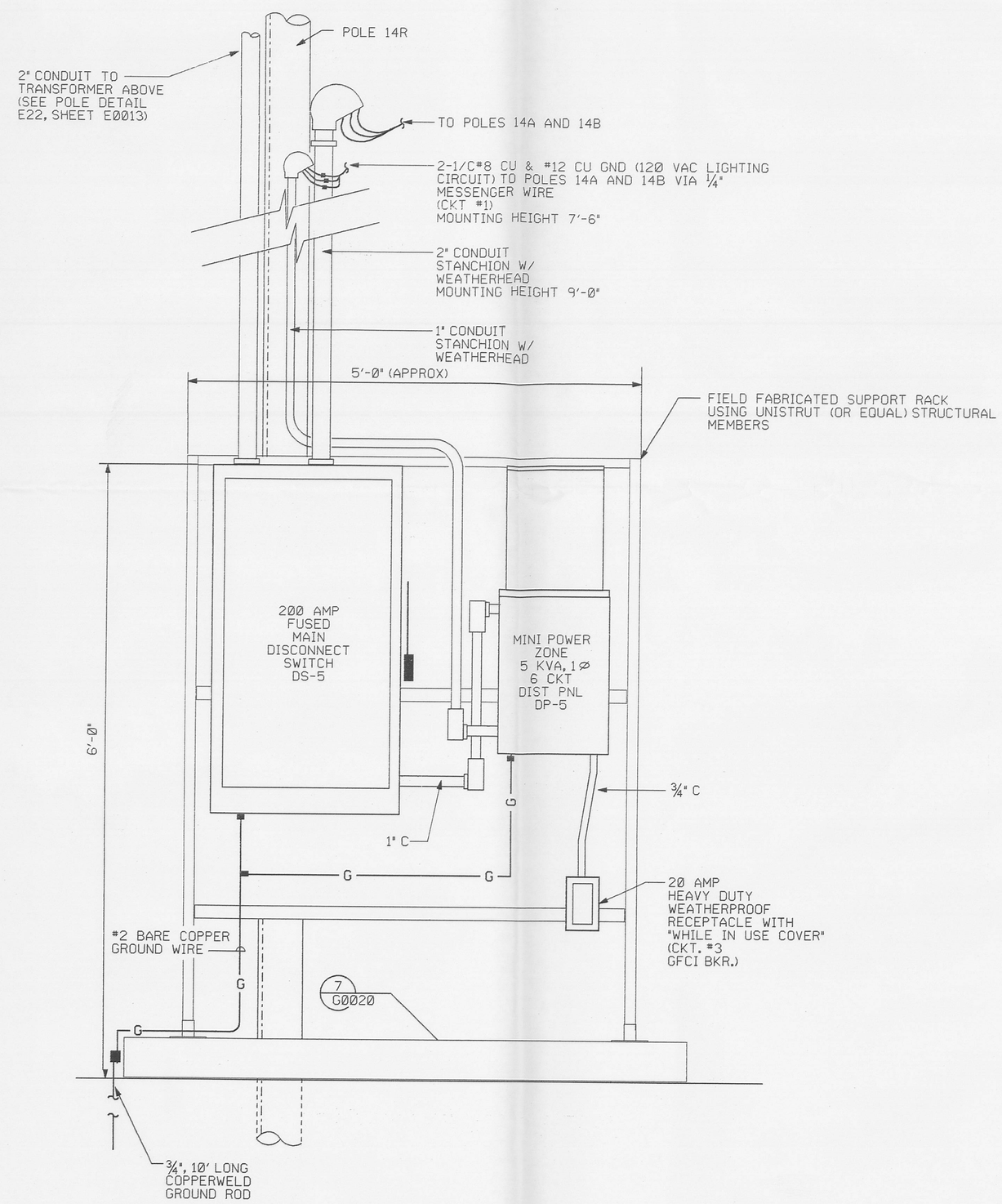

ELEVATION E4 / E0004 — REF E0005
DISCONNECT SWITCH @ SUPPORT AREA TRAILERS
NTS

NOTES

1. SEE SHEET NO. E0006 FOR PANEL SCHEDULES.

RELATED DWG NO.	DRAWING TITLE	SHEET NO.
92X-5900-X-00320	DRAWING INDEX	X0002
92X-5900-E-00404	SINGLE LINE DIAGRAM - WEST SIDE 13.2 KV FEEDERS	E0002
92X-5900-E-00379	OVERALL SITE POWER PLAN	E0005
92X-5900-E-00381	PANEL SCHEDULES	E0006
92X-5900-E-00406	CABLE AND CONDUIT SCHEDULES	E0008
92X-5900-E-00376	DETAILS - SHEET 5	E0013
92X-5900-G-00368	CIVIL - MISCELLANEOUS DETAILS	G0020

000034

REV. NO.	ISSUE OR REVISION PURPOSE - DESCRIPTION	A-E	FERMCO	DATE
1	INCORPORATED FDF DCN #20401-011; CHANGED 1/2" MESSENGER TO 3/8", 5/8" TO 1/2"	CS	N/A	10/8/97
0	CERTIFIED FOR CONSTRUCTION	JMU	N/A	06/13/97

INITIALS AND DATE

UNITED STATES DEPARTMENT OF ENERGY
FERNALD ENVIRONMENTAL MANAGEMENT PROJECT

THIS DRAWING PREPARED BY
PARSONS
THE RALPH M. PARSONS CO. - PARSONS MAIN, INC. - ENGINEERING-SCIENCE, INC.
CINCINNATI, OHIO

PROJECT NAME
WASTE UNITS REMEDIATION
SOUTHERN WASTE UNITS - SITE PREPARATION PACKAGE

DRAWING TITLE
ELECTRICAL
SINGLE LINE DIAGRAMS / ELEVATIONS
WHEEL WASH FACILITY AND SUPPORT AREA

DRAWN BY	DATE	LEAD ENGINEER	DATE	CHECKED BY	DATE
T. COLLINS	11/17/96	J. L. COOPER	06/13/97	J. L. COOPER	11/26/96

PLANT/BLDG. NO.	FLOOR	SCALE	CLASS
		NONE	

SUBMITTED FOR APPROVAL	FERMCO CRU APPROVAL	FERMCO PROJECT NO.
MIKE USHER 06/13/97	N/A	20400

A-E DATE DATE

PREPARED UNDER PARSONS PROJECT ORDER NUMBER	DOE PROJECT NO.	FEMP PROJECT NO.	DRAWING INDEX CODE NO.	SHEET NO.	REV. NO.
SCEP/P0165		WBS 1.1.1.1.2.3.6 00-90701	92X-5900-E-00378	E0004	1

POWER POLE COORDINATES (NAD83)

POLE NO.	POLE HEIGHT	POLE STATUS	NORTH COORDINATES	EAST COORDINATES	ELEVATION NO.	SHEET NO.	GUYING LOCATIONS: STATIC LINE	13.2KV LINE	480V LINE	COMM. LINE	GUYING TYPE: BISSECTOR	DEADEND
1	45'	E	478,160.24	1,347,371.41	NOT IN CONTRACT							
2	45'	E	478,294.09	1,347,387.58	NOT IN CONTRACT							
3R	45'	RL	478,330.48	1,347,425.67	E21	E0013			X			X
3A	35'	N	478,438.16	1,347,498.61	E20	E0011			X			X
4	45'	E	478,298.08	1,347,567.58	NOT IN CONTRACT				X		X	
5	45'	E	478,240.08	1,347,679.57	NOT IN CONTRACT							
6	45'	E	478,198.08	1,347,794.57	NOT IN CONTRACT							
7	45'	E	478,153.08	1,347,922.58	NOT IN CONTRACT							
8	45'	E	478,109.08	1,348,053.57	NOT IN CONTRACT							
9	45'	E	478,098.07	1,348,185.57	NOT IN CONTRACT							
10	45'	E	478,098.07	1,348,322.57	NOT IN CONTRACT							
11R	55'	RL	477,513.27	1,348,307.75	E15	E0010			X			X
							X	X		X		X
12R	55'	RL	477,566.91	1,348,327.04	E12	E0010			X			X
13R	55'	RL	477,696.77	1,348,373.73	E19	E0011						
14R	55'	RL	477,828.51	1,348,421.10	E22	E0013						
14A	35'	N	477,847.00	1,348,452.00	E23	E0013			X			X
14B	35'	N	477,844.00	1,348,514.00	E24	E0013			X			X
15R	55'	RL	477,953.30	1,348,465.96	E16	E0010	X	X		X	X	
16	45'	E	478,103.23	1,348,442.58	E8	E0009	X	X		X	X	
17	45'	E	478,202.15	1,348,481.80	E9	E0010						
18	45'	E	478,320.07	1,348,526.57	E9	E0010						
19	45'	E	478,440.76	1,348,575.23	E9	E0010						
20	45'	E	478,554.58	1,348,619.46	E9	E0010						
21	45'	E	478,676.29	1,348,667.11	E9	E0010						
22	45'	E	478,790.45	1,348,717.53	E25	E0013	X	X	X	X	X	
23R	60'	RP	478,876.07	1,348,809.57	E10	E0010	X	X	X	X		XX
24R	60'	RP	478,883.62	1,348,885.04	E28	E0013						
24A	60'	RP*	478,899.45	1,349,019.31	E29	E0014			X	X		X
							X	X	X	X		X
24B	60'	RP*	478,987.71	1,348,957.68	E4	E0014	X	X		X		X
25R	60'	RP	478,906.86	1,349,087.86	E11	E0010						
26	55'	N	477,358.00	1,348,251.92	E13	E0010						
27	55'	N	477,216.84	1,348,201.18	E26	E0013	X	X		X		XX
28	55'	N	477,151.13	1,348,285.74	E14	E0010	X	X		X		X
29	55'	N	477,065.25	1,348,372.33	E17	E0010	X	X	X			X
29A	35'	N	477,018.92	1,348,463.00	E20	E0011			X			X
30	55'	N	477,105.00	1,348,116.00	E13	E0010						
31	55'	N	477,072.00	1,347,934.00	E7	E0009	X	X	X	X	X	
31A	35'	N	477,117.00	1,347,934.00	E20	E0011						
32	55'	N	477,089.00	1,347,845.00	E16	E0010	X	X		X	X	
33	55'	N	477,195.00	1,347,693.00	E13	E0010						
34	55'	N	477,309.00	1,347,557.00	E16	E0010	X	X		X		XX
35	55'	N	477,397.00	1,347,568.00	E27	E0013						
36	55'	N	477,607.00	1,347,593.00	E17	E0010	X	X		X		X
41	55'	N	478,896.00	1,349,557.00	E2	E0014	X	X		X		X
OP71	60'	E	478,917.25	1,349,163.82	E18	E0011						
OP70	60'	E	478,922.35	1,349,248.13	E30 (2)	E0014						
OP69	60'	E	478,922.28	1,349,335.36	E3	E0014						
OP68	60'	E	478,919.54	1,349,435.35	E3	E0014						
OP67	60'	E	478,916.80	1,349,535.33	E2	E0014	X	X		X		X

"POLE STATUS" CODES

E = EXISTING POLE
N = NEW POLE IN NEW LOCATION, ASSIGNED POLE NUMBER
RL = NEW POLE/NEW LOCATION ASSIGNED EXISTING POLE NUMBER + "R", OLD POLE REMOVED AFTER INSTALLATION OF NEW POLE
RP = NEW POLE REPLACING EXISTING POLE AT SAME LOCATION, ASSIGNED EXISTING POLE NUMBER + "R"
RP* = NEW POLE REPLACING EXISTING POLE AT SAME LOCATION, ASSIGNED POLE NUMBER (EXISTING POLE NUMBER UNKNOWN)

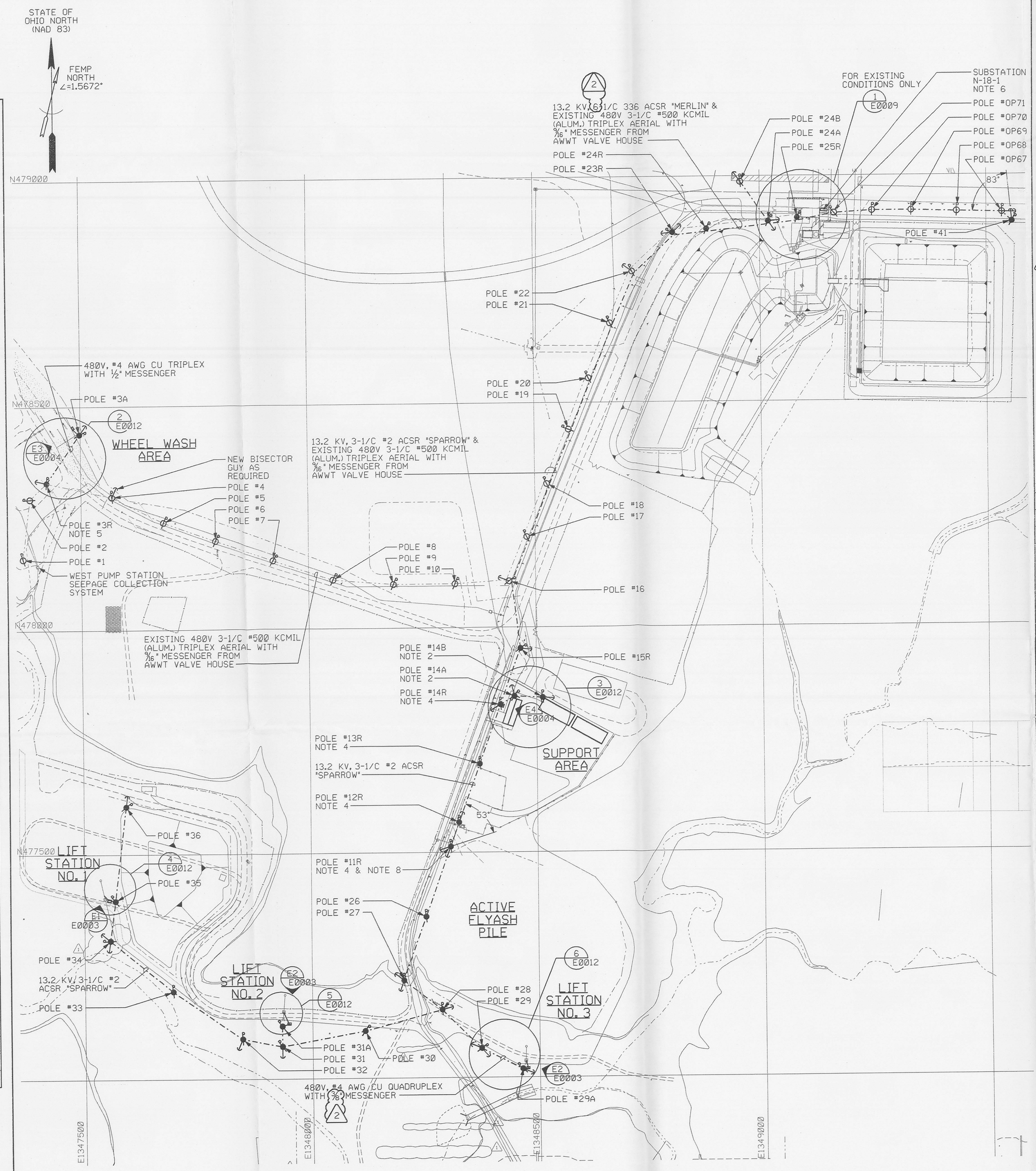

NOTES

1. SLACK SPAN AERIAL CABLE FROM POLE TO SERVICE PANEL RACK.
2. INSTALL A 120VAC, 250 WATT HPS FLOODLIGHT WITH PHOTOCELL ON POLES 14A AND 14B. CONNECT TO DP-5, CKT. 1.
3. FOR POLE DETAILS, SEE SHEET E0009, E0010, E0011, E0012, & E0013.
4. EXISTING 45' POLES TO BE REMOVED AFTER NEW 13.2 kV POLE LINE IS CONSTRUCTED. NEW 55' CLASS II POLES WILL BE REASSIGNED SAME POLE NUMBER WITH "R", IE, POLE 15 WILL BE REMOVED AND REPLACED BY POLE 15R.
5. PROVIDE NEW DEADEND GUY AS REQUIRED FOR NEW POLE 3R PLACEMENT.
6. SEE SHEET E0012 FOR CONNECTIONS TO EXISTING SUBSTATION N18-1 SWITCHES 4A1.
7. FOR MODIFICATION OF EXISTING POLE CONDUCTORS, SEE DETAIL 1 ON SHEET E0009.
8. DISCONNECT AND REMOVE EXISTING 480V TRIPLEX SERVICE FROM POLE #11 BACK TO POLE #16. MAINTAIN EXISTING 480V SERVICE TO WEST SEEPAGE COLLECTION PUMP (POLES 1-10 & 16-25).
9. MINIMUM CLEARANCES : PHASE TO PHASE = 20', PHASE TO GROUND = 16', 480V CONDUCTORS OVER ROADS = 23', ALL CONDUCTORS OVER BUILDINGS = 8'. OTHERS CLEARANCES ON OVERHEAD SERVICE IN ACCORDANCE WITH ANSI C2, NATIONAL ELECTRICAL SAFETY CODE.
10. (2) 13.2KV, 3-1/C #336 KCMIL ACSR "MERLIN" AND EXISTING 480V, 3-1/C #500 KCMIL(ALUM) TRIPLEX AERIAL WITH ⅝" MESSENGER FROM AWWT VALVE HOUSE, BETWEEN POLE #23R TO POLE #25R.
11. SITE PHASING SHALL BE AS FOLLOWS:

NORTH/SOUTH POLE LINES

EAST WIRE - PHASE A
CENTER WIRE - PHASE B
WEST WIRE - PHASE C

EAST/WEST POLE LINES

NORTH WIRE - PHASE A
CENTER WIRE - PHASE B
SOUTH WIRE - PHASE C

RELATED DWG NO.	DRAWING TITLE	SHEET NO.
92X-5900-X-00320	DRAWING INDEX	X0002
92X-5900-E-00405	SYMBOLS AND LEGEND	E0001
92X-5900-E-00377	SINGLE LINE DIAGRAMS / ELEVATIONS - LIFT STATION NO. 1, 2, & 3	E0003
92X-5900-E-00378	SINGLE LINE DIAGRAMS / ELEVATIONS - WHEEL WASH FACILITY & SUPPORT AREA	E0004
92X-5900-E-00382	DETAILS - SHEET 1	E0009
92X-5900-E-00407	DETAILS - SHEET 2	E0010
92X-5900-E-00408	DETAILS - SHEET 3	E0011
92X-5900-E-00409	DETAILS - SHEET 4	E0012
92X-5900-E-00376	DETAILS - SHEET 5	E0013
92X-5900-E-00454	DETAILS - SHEET 6	E0014

000035

REV. NO.	ISSUE OR REVISION PURPOSE - DESCRIPTION	A-E	FERMCO	DATE
2	INCORPORATED FDF DCN #20401-011; CHANGED ½" MESSENGER TO ⅝"; 20401-015; ADDED EXTENSIONS TO MAIN FEEDERS	CS	N/A	10/8/97
1	ELECTRICAL WORK ADDED TO CONTRACT	CS	N/A	06/24/97
0	CERTIFIED FOR CONSTRUCTION	JMU	N/A	06/13/97

INITIALS AND DATE

UNITED STATES DEPARTMENT OF ENERGY
FERNALD ENVIRONMENTAL MANAGEMENT PROJECT

THIS DRAWING PREPARED BY
PARSONS
THE RALPH M. PARSONS CO. - PARSONS MAIN, INC. - ENGINEERING-SCIENCE, INC.
CINCINNATI, OHIO

PROJECT NAME
WASTE UNITS REMEDIATION
SOUTHERN WASTE UNITS - SITE PREPARATION PACKAGE

DRAWING TITLE
ELECTRICAL
OVERALL SITE POWER PLAN

DRAWN BY	DATE	LEAD ENGINEER	DATE	CHECKED BY	DATE
T. COLLINS	01/04/97	J. L. COOPER	06/13/97	J. L. COOPER	01/28/97

PLANT/BLDG. NO.	FLOOR	SCALE	CLASS
		1" = 100'-0"	

SUBMITTED FOR APPROVAL (A-E / DATE)	FERMCO CRU APPROVAL (DATE)	FERMCO PROJECT NO.
MIKE USHER 06/13/97	N/A	20400

PREPARED UNDER PARSONS PROJECT ORDER NUMBER	DOE PROJECT NO.	FEMP PROJECT NO.	DRAWING INDEX CODE NO.	SHEET NO.	REV. NO.
SCEP/P0165		WBS 1.1.1.1.2.3.6 00-90701	92X-5900-E-00379	E0005	2

PANEL DP-1

VOLTAGE : 120/240V
MAIN BKR : 40A
MOUNTING : RACK MOUNTED MINI POWER ZONE

REMARKS : 1. • INDICATES 6MA GFCI CLASS A, •• INDICATES 30MA GFCI CLASS B
LOCATION : LIFT STATION NO. 1, SEE SHEET NO. E0003 AND E0005

DIRECTORY	WATTS LOAD L1	WATTS LOAD L2	CKT NO	WIRE SIZE	BKR AMPS	BKR AMPS	WIRE SIZE	CKT NO	WATTS LOAD L1	WATTS LOAD L2	DIRECTORY
100 WATT HPS FLOODLIGHT	100		1	12	20	--	N/A	2	---		SPACE
RECEPTACLE		180	3	12	20	--	N/A	4		---	SPACE
SPACE	---		5	N/A	--	--	N/A	6	---		SPACE
SUB-TOTALS	100	180							0	0	SUB-TOTALS
	L1	L2							L1	L2	

L1 L2 — 40 A MAIN — NEUTRAL BUS

TOTAL WATTS L1 : 100 TOTAL WATTS L2 : 180 TOTAL WATTS : 280

PANEL DP-2

VOLTAGE : 120/240V
MAIN BKR : 40A
MOUNTING : RACK MOUNTED MINI POWER ZONE

REMARKS : 1. • INDICATES 6MA GFCI CLASS A, •• INDICATES 30MA GFCI CLASS B
LOCATION : LIFT STATION NO. 2, SEE SHEET NO. E0003 AND E0005

DIRECTORY	WATTS LOAD L1	WATTS LOAD L2	CKT NO	WIRE SIZE	BKR AMPS	BKR AMPS	WIRE SIZE	CKT NO	WATTS LOAD L1	WATTS LOAD L2	DIRECTORY
100 WATT HPS FLOODLIGHT	100		1	12	20	--	N/A	2	---		SPACE
RECEPTACLE		180	3	12	20	--	N/A	4		---	SPACE
SPACE	---		5	N/A	--	--	N/A	6	---		SPACE
SUB-TOTALS	100	180							0	0	SUB-TOTALS
	L1	L2							L1	L2	

L1 L2 — 40 A MAIN — NEUTRAL BUS

TOTAL WATTS L1 : 100 TOTAL WATTS L2 : 180 TOTAL WATTS : 280

PANEL DP-3

VOLTAGE : 120/240V
MAIN BKR : 40A
MOUNTING : RACK MOUNTED MINI POWER ZONE

REMARKS : 1. • INDICATES 6MA GFCI CLASS A, •• INDICATES 30MA GFCI CLASS B
LOCATION : LIFT STATION NO. 3, SEE SHEET NO. E0003 AND E0005

DIRECTORY	WATTS LOAD L1	WATTS LOAD L2	CKT NO	WIRE SIZE	BKR AMPS	BKR AMPS	WIRE SIZE	CKT NO	WATTS LOAD L1	WATTS LOAD L2	DIRECTORY
100 WATT HPS FLOODLIGHT	100		1	12	20	--	N/A	2	---		SPACE
RECEPTACLE		180	3	12	20	--	N/A	4		---	SPACE
SPACE	---		5	N/A	--	--	N/A	6	---		SPACE
SUB-TOTALS	100	180							0	0	SUB-TOTALS
	L1	L2							L1	L2	

L1 L2 — 40 A MAIN — NEUTRAL BUS

TOTAL WATTS L1 : 100 TOTAL WATTS L2 : 180 TOTAL WATTS : 280

PANEL DP-5

VOLTAGE : 120/240V
MAIN BKR : 40A
MOUNTING : RACK MOUNTED MINI POWER ZONE

REMARKS : 1. • INDICATES 6MA GFCI CLASS A, •• INDICATES 30MA GFCI CLASS B
LOCATION : SUPPORT AREA, SEE SHEET NO. E0004 AND E0005

DIRECTORY	WATTS LOAD L1	WATTS LOAD L2	CKT NO	WIRE SIZE	BKR AMPS	BKR AMPS	WIRE SIZE	CKT NO	WATTS LOAD L1	WATTS LOAD L2	DIRECTORY
2-250 WATT HPS FLOODLIGHTS	500		1	8	20	--	N/A	2	---		SPACE
RECEPTACLE		180	3	12	20	--	N/A	4		---	SPACE
SPACE	---		5	N/A	--	--	N/A	6	---		SPACE
SUB-TOTALS	500	180							0	0	SUB-TOTALS
	L1	L2							L1	L2	

L1 L2 — 40 A MAIN — NEUTRAL BUS

TOTAL WATTS L1 : 500 TOTAL WATTS L2 : 180 TOTAL WATTS : 680

NOTES

RELATED DWG NO.	DRAWING TITLE	SHEET NO.
92X-5900-X-00320	DRAWING INDEX	X0002
92X-5900-E-00377	SINGLE LINE DIAGRAMS / ELEVATIONS - LIFT STATION NO. 1, 2, & 3	E0003
92X-5900-E-00378	SINGLE LINE DIAGRAMS / ELEVATIONS - WHEEL WASH FACILITY & SUPPORT AREA	E0004
92X-5900-E-00379	OVERALL SITE POWER PLAN	E0005

000036

REV. NO.	ISSUE OR REVISION PURPOSE - DESCRIPTION	A-E	FERMCO	DATE
0	CERTIFIED FOR CONSTRUCTION	JWL	N/A	6/12/97

INITIALS AND DATE

UNITED STATES DEPARTMENT OF ENERGY
FERNALD ENVIRONMENTAL MANAGEMENT PROJECT

THIS DRAWING PREPARED BY
PARSONS
THE RALPH M. PARSONS CO. - PARSONS MAIN, INC. - ENGINEERING-SCIENCE, INC.
CINCINNATI, OHIO

PROJECT NAME
WASTE UNITS REMEDIATION
SOUTHERN WASTE UNITS - SITE PREPARATION PACKAGE

DRAWING TITLE
ELECTRICAL
PANEL SCHEDULES

DRAWN BY	DATE	LEAD ENGINEER	DATE	CHECKED BY	DATE
T. COLLINS	11/17/96	James L Cooper	13 JUNE 97	J. L. COOPER	11/26/96

PLANT/BLDG. NO.	FLOOR	SCALE	CLASS
		NONE	

SUBMITTED FOR APPROVAL	FERMCO CRU APPROVAL	FERMCO PROJECT NO.
A-E DATE 6/13/97	N/A DATE	20400

STATE OF OHIO — JAMES L. COOPER E-56807 — REGISTERED PROFESSIONAL ENGINEER
James L Cooper 13 JUNE 1997

PREPARED UNDER PARSONS PROJECT ORDER NUMBER	DOE PROJECT NO.	FEMP PROJECT NO.	DRAWING INDEX CODE NO.	SHEET NO.	REV. NO.
SCEP/P0165		WBS 1.1.1.1.2.3.6 00-90701	92X-5900-E-00381	E0006	0

EQUIPMENT NAME : LIFT STATION NO. 1 PUMP PMP-1
EQUIPMENT NO. : PMP-1
S/L SHT. NO. : E0003, E0012
PLAN SHT. NO. : E0005
PREFIX WIRE NUMBERS WITH PMP1-

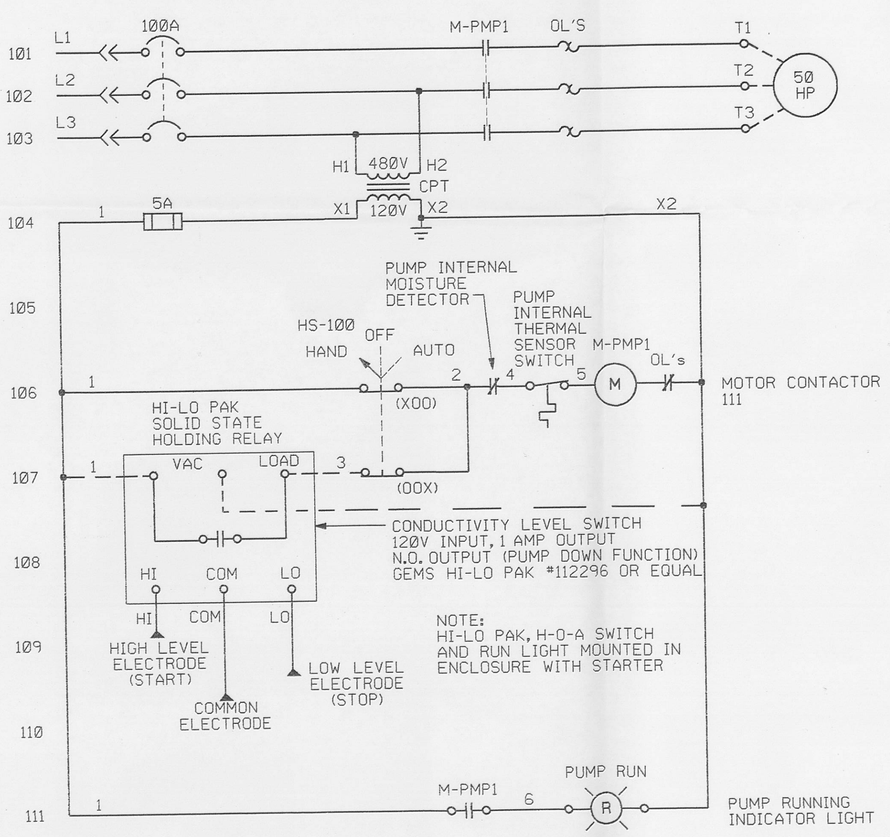

EQUIPMENT NAME : LIFT STATION NO. 2 PUMP PMP-2
EQUIPMENT NO. : PMP-2
S/L SHT. NO. : E0003, E0012
PLAN SHT. NO. : E0005
PREFIX WIRE NUMBERS WITH PMP2-

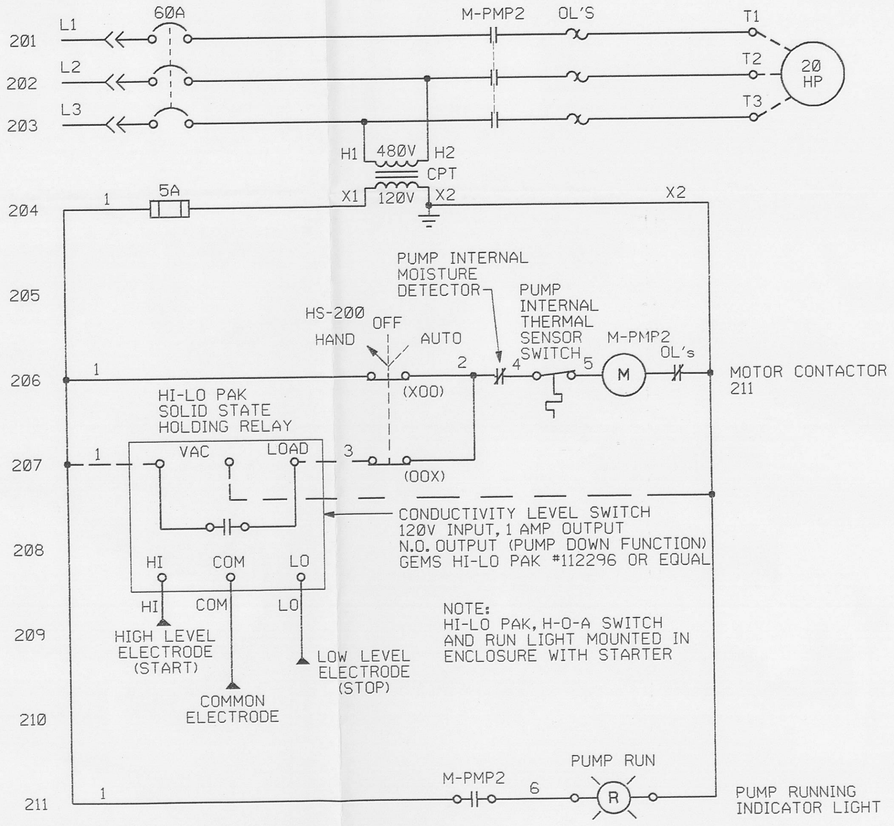

EQUIPMENT NAME : LIFT STATION NO. 3 PUMP PMP-3
EQUIPMENT NO. : PMP-3
S/L SHT. NO. : E0003, E0012
PLAN SHT. NO. : E0005
PREFIX WIRE NUMBERS WITH PMP3-

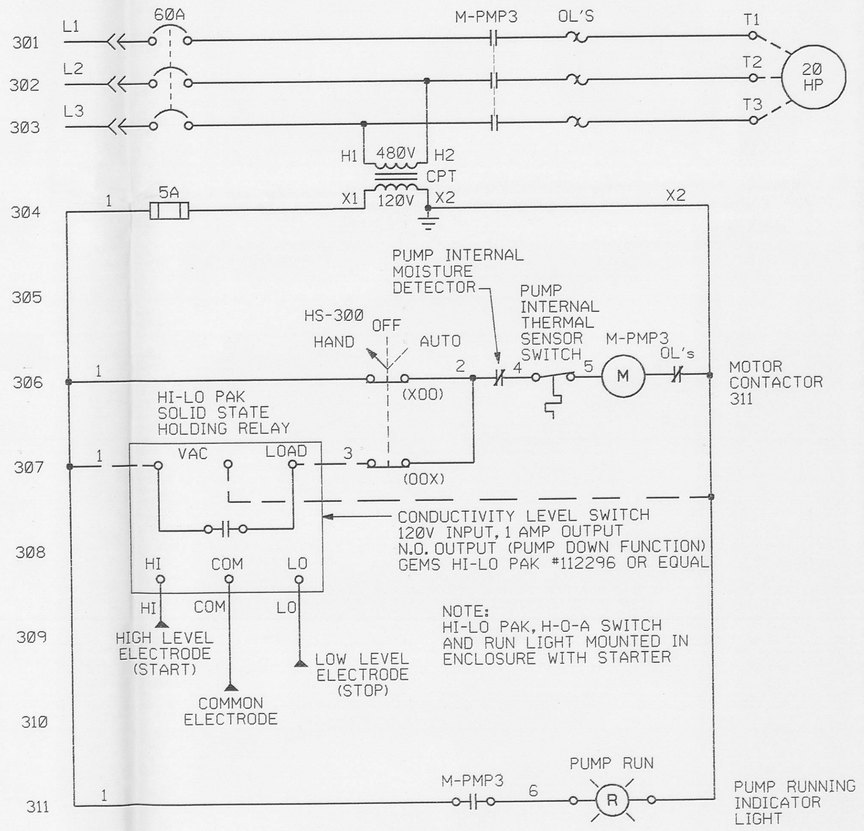

NOTES

POLE MOUNTED TRANSFORMER CONNECTION

EQUIPMENT NO. : ALL POLE MOUNTED TRANSFORMERS
S/L SHT. NO. : E0002
PLAN SHT. NO. : E0005

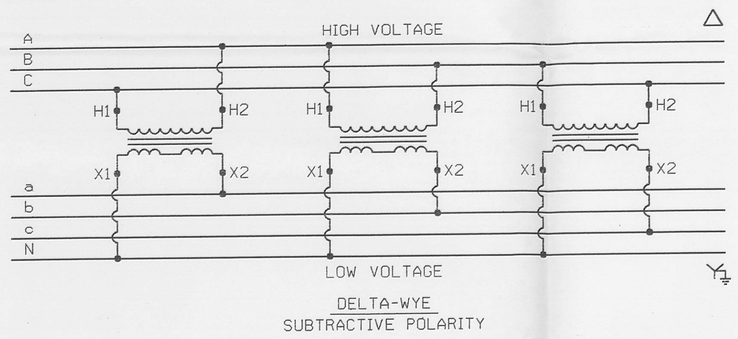

NOTE : INSTALLER SHALL CONFIRM DESIGNATIONS WITH VENDOR SUPPLIED INFORMATION.

SINGLE PHASE TRANSFORMER JUMPER WIRE SIZING TABLE

TRANSFORMER KVA	PRIMARY AMPS	SECONDARY AMPS	PRIMARY WIRE SIZE	SECONDARY WIRE SIZE
25	3.28	90.21	#2	#4
37.5	4.92	135.32	#2	#3
50	6.56	180.43	#2	#1
100	13.12	360.85	#2	250 KCMIL

NOTE: ALL JUMPERS TO BE COPPER

1

RELATED DWG NO.	DRAWING TITLE	SHEET NO.
92X-5900-X-00320	DRAWING INDEX	X0002
92X-5900-E-00405	SYMBOLS AND LEGEND	E0001
92X-5900-E-00377	SINGLE LINE DIAGRAMS / ELEVATIONS - LIFT STATION NO. 1, 2, & 3	E0003
92X-5900-E-00379	OVERALL SITE POWER PLAN	E0005

000037

REV. NO.	ISSUE OR REVISION PURPOSE - DESCRIPTION	A-E	FERMCO	DATE
1	ELECTRICAL WORK ADDED TO CONTRACT	CS	N/A	6/24/97
0	CERTIFIED FOR CONSTRUCTION	JMU	N/A	06/13/97

INITIALS AND DATE

STATE OF OHIO
JAMES L. COOPER
E-56807
REGISTERED
PROFESSIONAL ENGINEER

James L. Cooper
24 JUNE 1997

UNITED STATES DEPARTMENT OF ENERGY
FERNALD ENVIRONMENTAL MANAGEMENT PROJECT

THIS DRAWING PREPARED BY
PARSONS
THE RALPH M. PARSONS CO. - PARSONS MAIN, INC. - ENGINEERING-SCIENCE, INC.
CINCINNATI, OHIO

PROJECT NAME
WASTE UNITS REMEDIATION
SOUTHERN WASTE UNITS - SITE PREPARATION PACKAGE

DRAWING TITLE
ELECTRICAL
ELEMENTARY DIAGRAMS

DRAWN BY	DATE	LEAD ENGINEER	DATE	CHECKED BY	DATE
T. COLLINS	11/18/96	J. L. COOPER	06/13/97	J. L. COOPER	11/26/96

PLANT/BLDG. NO.	FLOOR	SCALE	CLASS
		NONE	

SUBMITTED FOR APPROVAL	FERMCO CRU APPROVAL	FERMCO PROJECT NO.
MIKE USHER 06/13/97	N/A	20400
A-E DATE	DATE	

PREPARED UNDER PARSONS PROJECT ORDER NUMBER	DOE PROJECT NO.	FEMP PROJECT NO.	DRAWING INDEX CODE NO.	SHEET NO.	REV. NO.
SCEP/P0165		WBS 1.1.1.1.2.3.6 00-90701	92X-5900-E-00380	E0007	1

CABLE SCHEDULE

CABLE NO	FROM	TO	CONDUCTOR NUMBER	CONDUCTOR SIZE	CONDUCTOR MATL.	CONDUCTOR INSUL	CONDUCTOR FUNCTION	WIRE TERMINATIONS 1	2	3	4	5	6	7	8	9	10	11	12	ROUTING	REF SHEET NO.	REMARKS
F1A1-1	LOAD SIDE OF SWITCH 1A1 IN UNIT SUBSTATION N18-1	CABLE TERM. @ LIGHTING ARRESTOR LA-OP71B	3-1/C 1-1/C	350KCMIL #2 GND	CU	15KV 133%	13.2KV POWER	F1A1-1 -L1	F1A1-1 -L2	F1A1-1 -L3	F1A1-1 -GND									C200	E0002	INSTALL 15KV INSULATED COPPER CABLE FROM SWITCH #1A1 TO POLE #OP71, NOTE 1
F1A1-2	POLE #23R	FUSED LOAD BREAK SWITCH FLB-41 (POLE #41)	3-1/C	336KCMIL	ACSR	BARE	13.2KV POWER	F1A1-2 -L1	F1A1-2 -L2	F1A1-2 -L3										POLE #23R TO #41	E0002	AERIAL CONDUCTOR "MERLIN"
F4A1-1	LOAD SIDE OF SWITCH 4A1 IN UNIT SUBSTATION N18-1	CABLE TERM. @ LIGHTING ARRESTOR LA-OP71A	3-1/C 1-1/C	350KCMIL #2 GND	CU	15KV 133%	13.2KV POWER	F4A1-1 -L1	F4A1-1 -L2	F4A1-1 -L3	F4A1-1 -GND									C100	E0012	INSTALL 15KV INSULATED COPPER CABLE FROM SWITCH #4A1 TO POLE #OP71, NOTE 1
F4A1-2	POLE #OP67	FUSED LOAD BREAK SWITCH FLB-22 (POLE #22)	3-1/C	336KCMIL	ACSR	BARE	13.2KV POWER	F4A1-2 -L1	F4A1-2 -L2	F4A1-2 -L3										POLE #OP67 TO #22	E0002	AERIAL CONDUCTOR "MERLIN"
F4A1-2A	TAP F4A1-2 @ POLE 24A	LOAD BREAK SWITCH LB-24B (POLE #24B)	3-1/C	336KCMIL	ACSR	BARE	13.2KV POWER	F4A1-2A -L1	F4A1-2A -L2	F4A1-2A -L3										POLE #24A TO #24B		AERIAL CONDUCTOR "MERLIN"
F4A1-3	FUSED LOAD BREAK SWITCH FLB-22 (POLE #22)	LOAD BREAK SWITCH LB-13R (POLE #13R)	3-1/C	#2 AWG	ACSR	BARE	13.2KV POWER	F4A1-3 -L1	F4A1-3 -L2	F4A1-3 -L3										POLE #22 TO #13R		AERIAL CONDUCTOR "SPARROW"
F4A1-4	LOAD BREAK SWITCH LB-13R (POLE #13R)	DEADEND TERMINATION @ POLE 36	3-1/C	#2 AWG	ACSR	BARE	13.2KV POWER	F4A1-4 -L1	F4A1-4 -L2	F4A1-4 -L3										POLE #13R TO #36		AERIAL CONDUCTOR "SPARROW"
F4A1-5	TAP F4A1-4 @ POLE #35	FUSED CUTOUT FC-35 (POLE #35)	3-1/C	#2 AWG	AL	BARE	13.2KV POWER	F4A1-5 -L1	F4A1-5 -L2	F4A1-5 -L3										POLE #35		
F4A1-6	TAP F4A1-3 @ POLE #14R	FUSED CUTOUT FC-14R (POLE #14R)	3-1/C	#2 AWG	AL	BARE	13.2KV POWER	F4A1-6 -L1	F4A1-6 -L2	F4A1-6 -L3										POLE #14R		
F4A1-7	FUSED CUTOUT FC-14R (POLE #14R)	TRANSFORMER T-14R (POLE #14R)	3-1/C	#2 AWG	CU	BARE	13.2KV POWER	F4A1-7 -L1	F4A1-7 -L2	F4A1-7 -L3										POLE #14R		
F4A1-8	TAP F4A1-4 @ POLE #28	DEADEND TERMINATION @ POLE #29	3-1/C	#2 AWG	ACSR	BARE	13.2KV POWER	F4A1-8 -L1	F4A1-8 -L2	F4A1-8 -L3										POLE #28 TO #29		AERIAL CONDUCTOR "SPARROW"
F4A1-9	FUSED CUTOUT FC-29 (POLE #29)	TRANSFORMER T-29 (POLE #29)	3-1/C	#2 AWG	CU	BARE	13.2KV POWER	F4A1-9 -L1	F4A1-9 -L2	F4A1-9 -L3										POLE #29		
F4A1-10	TAP F4A1-4 @ POLE #31	FUSED CUTOUT FC-31 (POLE #31)	3-1/C	#2 AWG	AL	BARE	13.2KV POWER	F4A1-10 -L1	F4A1-10 -L2	F4A1-10 -L3										POLE #31		
F4A1-11	FUSED CUTOUT FC-31 (POLE #31)	TRANSFORMER T-31 (POLE #31)	3-1/C	#2 AWG	CU	BARE	13.2KV POWER	F4A1-11 -L1	F4A1-11 -L2	F4A1-11 -L3										POLE #31		
F4A1-12	FUSED CUTOUT FC-35 (POLE #35)	TRANSFORMER T-35 (POLE #35)	3-1/C	#2 AWG	CU	BARE	13.2KV POWER	F4A1-12 -L1	F4A1-12 -L2	F4A1-12 -L3										POLE #35		
F4A1-13	TAP F4A1-4 @ POLE #12R	FUSED CUTOUT FC-12R (POLE #12R)	3-1/C	#2 AWG	AL	BARE	13.2KV POWER	F4A1-13 -L1	F4A1-13 -L2	F4A1-13 -L3										POLE #12R		
F4A1-14	FUSED CUTOUT FC-12R (POLE #12R)	TRANSFORMER T-12R (POLE #12R)	3-1/C	#2 AWG	CU	BARE	13.2KV POWER	F4A1-14 -L1	F4A1-14 -L2	F4A1-14 -L3										POLE #12R		
F4A1-15	DEADEND TERMINATION @ POLE #29	FUSED CUTOUT FC-29 (POLE #29)	3-1/C	#2 AWG	CU	BARE	13.2KV POWER	F4A1-15 -L1	F4A1-15 -L2	F4A1-15 -L3										POLE #29		
F4A1-16	DEADEND TERMINATION @ POLE #36	FUSED CUTOUT FC-36 (POLE #36)	3-1/C	#2 AWG	AL	BARE	13.2KV POWER	F4A1-16 -L1	F4A1-16 -L2	F4A1-16 -L3										POLE #36		
F4A1-17	FUSED CUTOUT FC-36 (POLE #36)	TRANSFORMER T-36 (POLE #36)	3-1/C	#2 AWG	CU	BARE	13.2KV POWER	F4A1-17 -L1	F4A1-17 -L2	F4A1-17 -L3										POLE #36		
101P	TRANSFORMER T-14R (POLE #14R)	400A MAIN DISC. SWITCH DS-5 @ SUPPORT AREA TRAILERS	3-1/C 1-1/C	#4/0 AWG #4 GND	CU	600V	480V POWER	T14R -L1	T14R -L2	T14R -L3	T14R -GND									VIA CONDUIT PER ELEVATION E4	E0004	
102P	400A MAIN DISCONNECT SWITCH DS-5	MINI POWER ZONE DP-5	2-1/C 1-1/C	#6 AWG #8 GND	CU	600V	480V POWER	DS5 -L1	DS5 -L2	DS5 -GND										VIA CONDUIT PER ELEVATION E4		
103P	400A MAIN DISCONNECT SWITCH DS-5	POLE #14B	3-1/C 1-1/C	#4/0 AWG #4 GND	CU	600V	480V POWER	DS5 -L1	DS5 -L2	DS5 -L3	DS5 -GND									POLE #14R, #14A, #14B		VIA ½" MESSENGER
104P	TAP 103P @ POLE #14A	RAD/DECON TRAILER 225A DISCONNECT SWITCH	3-1/C 1-1/C	#4/0 AWG #4 GND	CU	600V	480V POWER	DS5 -L1	DS5 -L2	DS5 -L3	DS5 -GND									POLE #14A		
105P	TAP 103P @ POLE #14B	FDF CONST. OFFICE TRAILER 225A DISCONNECT SWITCH	3-1/C 1-1/C	#4/0 AWG #4 GND	CU	600V	480V POWER	DS5 -L1	DS5 -L2	DS5 -L3	DS5 -GND									POLE #14B		
109P	TRANSFORMER T-29 (POLE #29)	DEADEND TERMINATION @ POLE #29A	4-1/C	#4 AWG	CU	600V	480V POWER	T29 -L1	T29 -L2	T29 -L3	T29 -GND									POLE #29 TO #29A	E0002	QUADRUPLEX VIA ⅜" MESSENGER
110P	TAP 109P @ POLE #29A	100A MAIN DISC. SWITCH DS-3 @ LIFT STATION NO. 3	4-1/C	#4 AWG	CU	600V	480V POWER	T29 -L1	T29 -L2	T29 -L3	T29 -GND									VIA CONDUIT PER ELEVATION E2	E0003	VIA ⅜" MESSENGER
111P	100A MAIN DISC. SWITCH DS-3 @ LIFT STATION NO. 3	4'x4'x3'-0" WIREWAY	3-1/C 1-1/C	#6 AWG #8 GND	CU	600V	480V POWER	DS3 -L1	DS3 -L2	DS3 -L3	DS3 -GND											
112P	TAP 111P @ WIREWAY	LIFT STATION NO. 3 STARTER	3-1/C 1-1/C	#8 AWG #12 GND	CU	600V	480V POWER	DS3 -L1	DS3 -L2	DS3 -L3	DS3 -GND									VIA U/G CONDUIT PER DETAIL 6	E0012	
113P	LIFT STATION NO. 3 STARTER	LIFT STATION PUMP PMP-3	3-1/C 1-1/C	#8 AWG #12 GND	CU	600V	480V POWER	PMP3 -T1	PMP3 -T2	PMP3 -T3	PMP3 -GND									VIA CONDUIT PER ELEVATION E2	E0003	
114P	TAP 111P @ WIREWAY	MINI POWER ZONE DIST. PNL. DP-3	2-1/C 1-1/C	#6 AWG #6 GND	CU	600V	480V POWER	DS3 -L1	DS3 -L2	DS3 -GND										POLE #31 TO #31A	E0002	QUADRUPLEX VIA ⅜" MESSENGER
119P	TRANSFORMER T-31 (POLE #31)	DEADEND TERMINATION @ POLE #31A	4-1/C	#4 AWG	CU	600V	480V POWER	T31 -L1	T31 -L2	T31 -L3	T31 -GND									VIA CONDUIT PER ELEVATION E2	E0003	VIA ⅜" MESSENGER
120P	TAP 119P @ POLE #31A	100A MAIN DISC. SWITCH DS-2 @ LIFT STATION NO. 2	4-1/C	$4 AWG	CU	600V	480V POWER	T31 -L1	T31 -L2	T31 -L3	T31 -GND											
121P	100A MAIN DISC. SWITCH DS-2 @ LIFT STATION NO. 2	4'x4'x3'-0" WIREWAY	3-1/C 1-1/C	#6 AWG #8 GND	CU	600V	480V POWER	DS2 -L1	DS2 -L2	DS2 -L3	DS2 -GND									VIA U/G CONDUIT PER DETAIL 5	E0012	
122P	TAP 121P @ WIREWAY	LIFT STATION NO. 2 STARTER	3-1/C 1-1/C	#8 AWG #12 GND	CU	600V	480V POWER	DS2 -L1	DS2 -L2	DS2 -L3	DS2 -GND									VIA CONDUIT PER ELEVATION E2	E0003	
123P	LIFT STATION NO. 2 STARTER	LIFT STATION PUMP PMP-2	3-1/C 1-1/C	#8 AWG #12 GND	CU	600V	480V POWER	PMP2 -T1	PMP2 -T2	PMP2 -T3	PMP2 -GND											
124P	TAP 121P @ WIREWAY	MINI POWER ZONE DIST. PNL. DP-2	2-1/C 1-1/C	#6 AWG #6 GND	CU	600V	480V POWER	DS2 -L1	DS2 -L2	DS2 -GND										POLE #35 TO SWITCH		VIA ⅜" MESSENGER
130P	TRANSFORMER T-35 (POLE #35)	100A MAIN DISC. SWITCH DS-1 @ LIFT STATION NO. 1	3-1/C 1-1/C	#1/0 AWG #6 GND	CU	600V	480V POWER	T35 -L1	T35 -L2	T35 -L3	T35 -GND									VIA CONDUIT PER ELEVATION E1		
131P	100A MAIN DISC. SWITCH DS-1 @ LIFT STATION NO. 1	4'x4'x3'-0" WIREWAY	3-1/C 1-1/C	#1/0 AWG #6 GND	CU	600V	480V POWER	DS1 -L1	DS1 -L2	DS1 -L3	DS1 -GND									VIA CONDUIT PER ELEVATION E1		
132P	TAP 131P @ WIREWAY	LIFT STATION NO. 1 STARTER	3-1/C 1-1/C	#2 AWG #8 GND	CU	600V	480V POWER	DS1 -L1	DS1 -L2	DS1 -L3	DS1 -GND									VIA U/G CONDUIT PER DETAIL 4	E0012	
133P	LIFT STATION NO. 1 STARTER	LIFT STATION PUMP PMP-1	3-1/C 1-1/C	#4 AWG #8 GND	CU	600V	480V POWER	PMP1 -T1	PMP1 -T2	PMP1 -T3	PMP1 -GND									VIA CONDUIT PER ELEVATION E1	E0003	
134P	TAP 131P @ WIREWAY	MINI POWER ZONE DIST. PNL. DP-1	2-1/C 1-1/C	#6 AWG #6 GND	CU	600V	480V POWER	DS1 -L1	DS1 -L2	DS1 -GND										POLE #12R TO #11R	E0002	QUADRUPLEX VIA ⅜" MESSENGER
140P	TRANSFORMER T-12R (POLE #12R)	POLE #11R	4-1/C	#4 AWG	CU	600V	480V POWER	T12R -L1	T12R -L2	T12R -L3	T12R -GND									POLE #3R TO # 3A	E0004	TRIPLEX VIA ⅜" MESSENGER
150P	TAP EXISTING 480V, 500 KCMIL @ POLE #3R	POLE #3A	3-1/C	#4 AWG	CU	600V	480V POWER	PP1 -1L1	PP1 -1L2	PP1 -1L3										VIA CONDUIT PER ELEVATION E3		
151P	TAP 150P @ POLE #3A	60A MAIN DISC. SWITCH DS-4 @ WHEEL WASH FACILITY	3-1/C 1-1/C	#8 AWG #8 GND	CU	600V	480V POWER	PP1 -1L1	PP1 -1L2	PP1 -1L3	PP1 -GND											
152P	60A MAIN DISC. SWITCH DS-4 @ WHEEL WASH FACILITY	4'x4'x2'-0" WIREWAY	3-1/C 1-1/C	#8 AWG #8 GND	CU	600V	480V POWER	DS4 -L1	DS4 -L2	DS4 -L3	DS4 -GND											
153P	TAP 152P @ WIREWAY	20A CIRCUIT BREAKER FOR TWIST LOCK RECEP.	3-1/C 1-1/C	#12 AWG #12 GND	CU	600V	480V POWER	DS4 -L1	DS4 -L2	DS4 -L3	DS4 -GND											
154P	TAP 152P @ WIREWAY	480V, 1PH, 100W, HPS LIGHT	2-1/C 1-1/C	#12 AWG #12 GND	CU	600V	480V POWER	DS4 -L1	DS4 -L2	DS4 -GND												

CONDUIT SCHEDULE

CONDUIT NO	FROM	TO	COND SIZE	CONTAINS CABLE(S)	REMARKS
C100	SUBSTATION N-18-1, SWITCH 4A1 (TOP HAT)	POLE #OP71	5'	F4A1-1	RIGID STEEL
C200	SUBSTATION N18-1 SIDE OF SWITCH 1A1	POLE #OP71	5'	F1A1-1	RIGID STEEL

NOTES

1. INSTALL GROUND IN CONDUIT TO POLE #OP71 ONLY. EXOTHERMIC WELD TO POLE GROUND CONDUCTOR.

RELATED DWG NO.	DRAWING TITLE	SHEET NO.
92X-5900-X-00320	DRAWING INDEX	X0002
92X-5900-E-00404	SINGLE LINE DIAGRAM - WEST SIDE 13.2 KV FEEDERS	E0002
92X-5900-E-00377	SINGLE LINE DIAGRAMS / ELEVATIONS - LIFT STATION NO. 1, 2, & 3	E0003
92X-5900-E-00378	SINGLE LINE DIAGRAMS / ELEVATIONS - WHEEL WASH FACILITY & SUPPORT AREA	E0004
92X-5900-E-00379	OVERALL SITE POWER PLAN	E0005

000038

REV. NO.	ISSUE OR REVISION PURPOSE - DESCRIPTION	A-E	FERMCO	DATE
2	INCORPORATED FDF DCN #20401-011; CHANGED VARIOUS MESSENGERS FROM ½" TO ⅜", ⅝" TO ½"; 20401-015; ADDED EXTENSION TO F1A1-1, -2 & F4A1-1, -2	CS	N/A	10/13/97
1	ELECTRICAL WORK ADDED TO CONTRACT	CS	N/A	06/24/97
0	CERTIFIED FOR CONSTRUCTION	JMU	N/A	06/13/97

INITIALS AND DATE

UNITED STATES DEPARTMENT OF ENERGY
FERNALD ENVIRONMENTAL MANAGEMENT PROJECT

THIS DRAWING PREPARED BY
PARSONS
THE RALPH M. PARSONS CO. - PARSONS MAIN, INC. - ENGINEERING-SCIENCE, INC.
CINCINNATI, OHIO

PROJECT NAME
WASTE UNITS REMEDIATION
SOUTHERN WASTE UNITS - SITE PREPARATION PACKAGE

DRAWING TITLE
ELECTRICAL
CABLE AND CONDUIT SCHEDULES

DRAWN BY	DATE	LEAD ENGINEER	DATE	CHECKED BY	DATE
T. COLLINS	01/09/97	J. L. COOPER	06/13/97	J.L. COOPER	01/28/97

PLANT/BLDG. NO. | FLOOR | SCALE: NONE | CLASS

SUBMITTED FOR APPROVAL: MIKE USHER 06/13/97 (A-E DATE) | FERMCO CRU APPROVAL: N/A (DATE) | FERMCO PROJECT NO. 20400

DOE PROJECT NO.	TEMP PROJECT NO.	DRAWING INDEX CODE NO.	SHEET NO.	REV. NO.
	WBS 1.1.1.1.2.3.6 00-90701	92X-5900-E-00406	E0008	2

PREPARED UNDER PARSONS PROJECT ORDER NUMBER: SCEP/P0165

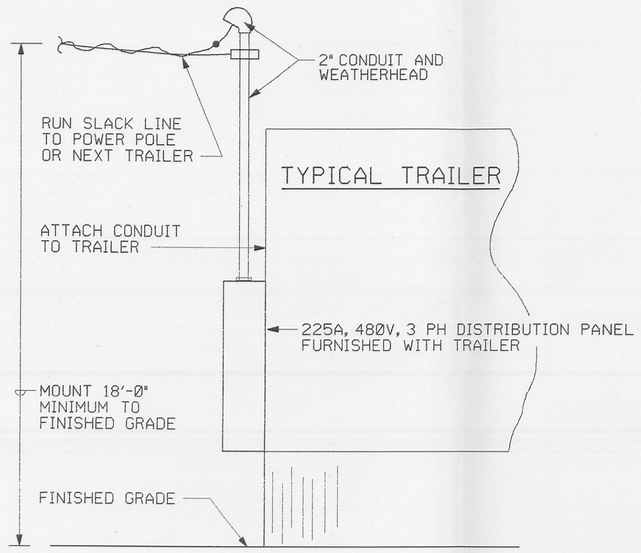

ELEVATION TRAILER MAST (E6 / E0009) REF E0012
NTS

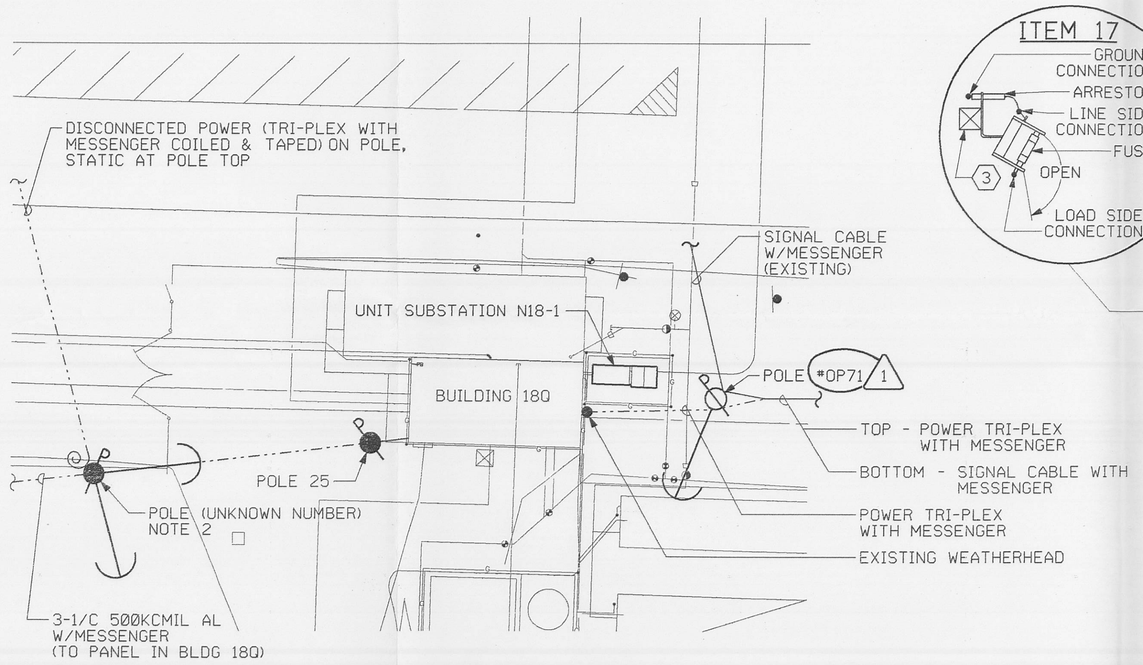

NOTE:
THIS DETAIL IS FOR THE PURPOSE OF SHOWING EXISTING CONDUCTORS ONLY.
FOR 13.2KV OVERHEAD CONDUCTORS SEE OVERALL SITE POWER PLAN AND POLE ELEVATIONS.

DETAIL SUBSTATION AREA EXISTING (1 / E0009) REF E0005
NTS

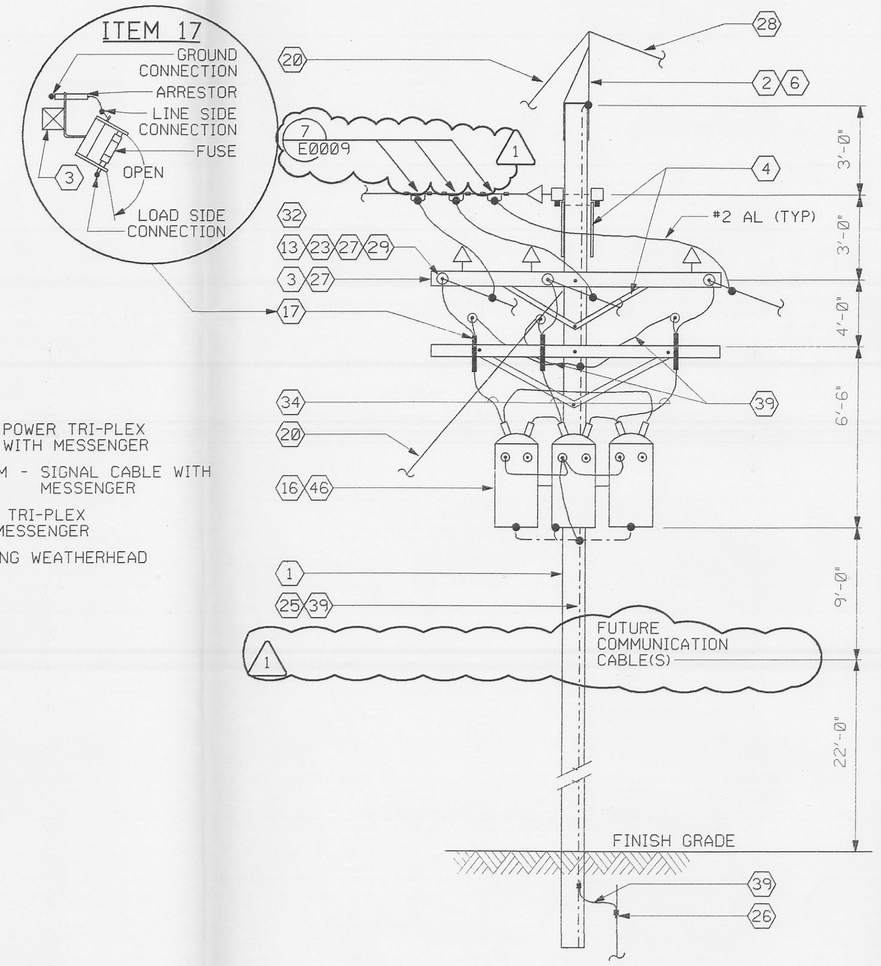

ELEVATION POLE 31 (E7 / E0009) REF E0005
NTS

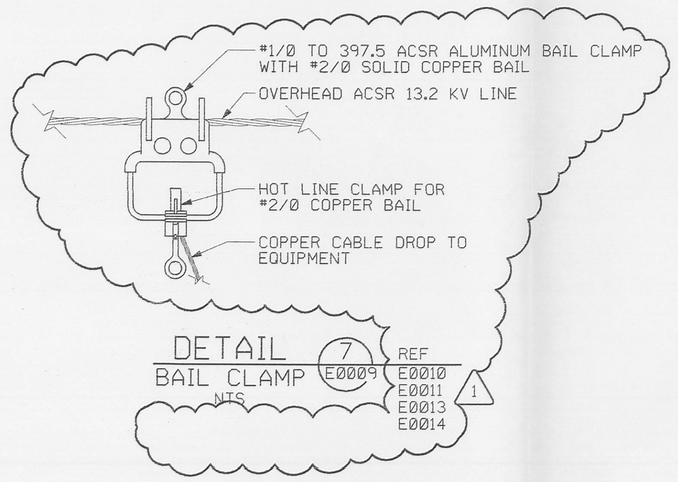

DETAIL BAIL CLAMP (7 / E0009) REF E0010 E0011 E0013 E0014 (1)
NTS

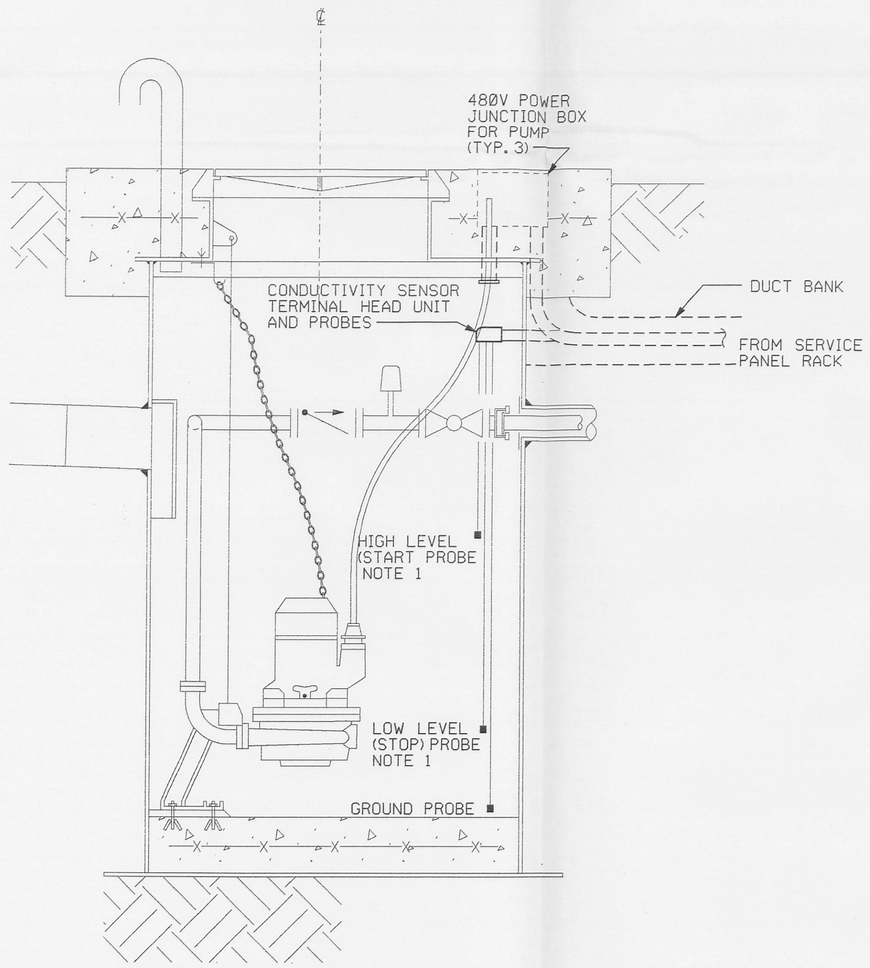

SECTION LIFT STATION MANHOLE (C / -)
NTS

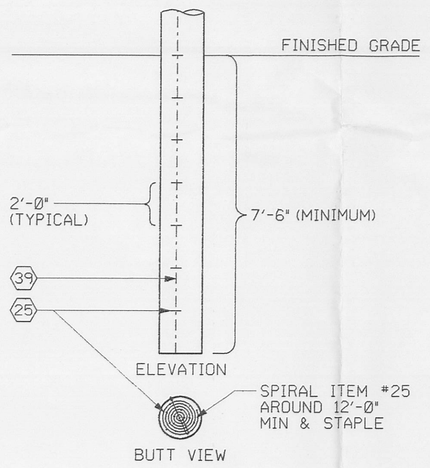

DETAIL (8 / E0009) REF E0010 E0011 E0012 E0013 E0014 (1)
NTS
TYPICAL FOR ALL POLES

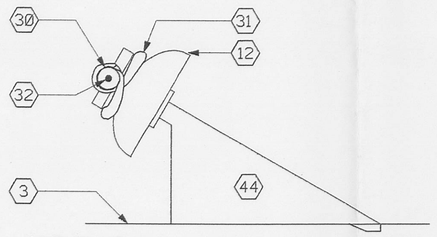

DETAIL CROSSARM CORNER TYPE PINS (9 / E0009) REF E0010 E0011 E0013
NTS
USE ON POLES AS REQUIRED

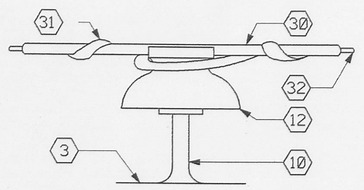

DETAIL STRAIGHT ATTACHMENT TYPE PINS (10 / E0009) REF E0010 E0011 E0013
NTS
USE ON POLES AS REQUIRED

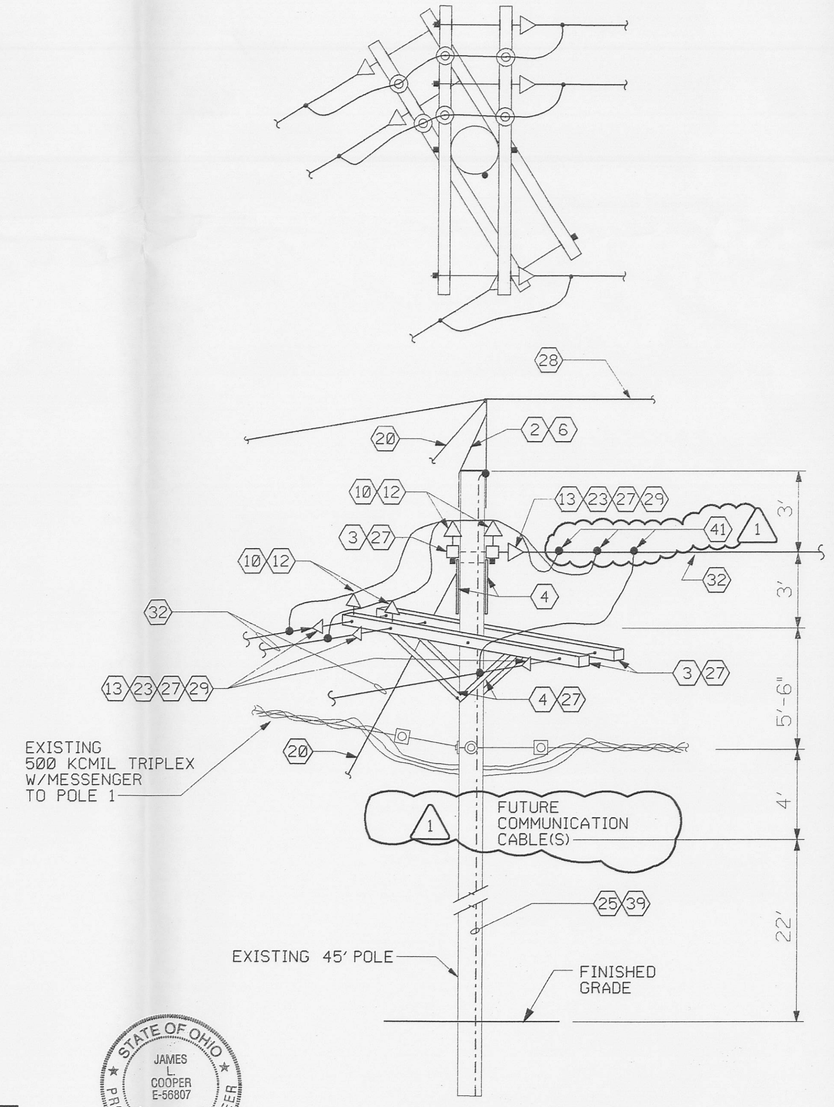

ELEVATION POLE 16 (E8 / E0009) REF E0005
NTS

STATE OF OHIO JAMES L. COOPER E-66807 REGISTERED PROFESSIONAL ENGINEER
James L. Cooper 24 JUNE 1997

NOTES

1. FOR HIGH AND LOW LEVEL PROBE SETTINGS AND PUMP STATION DETAILS, REFER TO CIVIL SHEET G0013.
2. BEFORE REMOVAL OF POLE (UNKNOWN NUMBER), REMOVE EXISTING DISCONNECTED POWER (TRIPLEX WITH MESSENGER) BACK TO 2ND POLE TO NORTH. COIL, TAPE, AND DEAD-END GUY (DETAIL 12, E0011) AT THAT POLE (2ND POLE TO NORTH). REMOVE STATIC LINE BACK TO 1ST POLE TO NORTH.
3. SEE SHEET E0011 FOR MATERIAL LIST.
4. SECONDARY CONDUCTORS ON POLE 35A ARE FUTURE, BY OTHERS.

RELATED DWG NO.	DRAWING TITLE	SHEET NO.
92X-5900-X-00320	DRAWING INDEX	X0002
92X-5900-E-00379	OVERALL SITE POWER PLAN	E0005
92X-5900-E-00407	DETAILS - SHEET 2	E0010
92X-5900-E-00408	DETAILS - SHEET 3	E0011
92X-5900-E-00409	DETAILS - SHEET 4	E0012
92X-5900-E-00376	DETAILS - SHEET 5	E0013
(1) 92X-5900-E-00454	DETAILS - SHEET 6	E0014
92X-5900-G-00368	CIVIL - MISCELLANEOUS DETAILS	G0013

000039

REV. NO.	ISSUE OR REVISION PURPOSE - DESCRIPTION	A-E	FERMCO	DATE
1	ELECTRICAL WORK ADDED TO CONTRACT	CS	N/A	4/24/97
0	CERTIFIED FOR CONSTRUCTION	JMU	N/A	06/13/97

INITIALS AND DATE

UNITED STATES DEPARTMENT OF ENERGY
FERNALD ENVIRONMENTAL MANAGEMENT PROJECT

THIS DRAWING PREPARED BY
PARSONS
THE RALPH M. PARSONS CO. - PARSONS MAIN, INC. - ENGINEERING-SCIENCE, INC.
CINCINNATI, OHIO

PROJECT NAME
WASTE UNITS REMEDIATION
SOUTHERN WASTE UNITS - SITE PREPARATION PACKAGE

DRAWING TITLE
ELECTRICAL DETAILS SHEET 1

DRAWN BY	DATE	LEAD ENGINEER	DATE	CHECKED BY	DATE
T. COLLINS	11/19/96	J. L. COOPER	06/13/97	J. L. COOPER	11/26/96

PLANT/BLDG. NO.	FLOOR	SCALE	CLASS
		AS NOTED	

SUBMITTED FOR APPROVAL	FERMCO CRU APPROVAL	FERMCO PROJECT NO.
MIKE USHER 06/13/97	N/A	20400
A-E DATE	DATE	

PREPARED UNDER PARSONS PROJECT ORDER NUMBER	DOE PROJECT NO.	TEMP PROJECT NO.	DRAWING INDEX CODE NO.	SHEET NO.	REV. NO.
SCEP/P0165		WBS 1.1.1.1.2.3.6 00-90701	92X-5900-E-00382	E0009	1

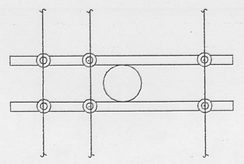

VIEW D
NTS

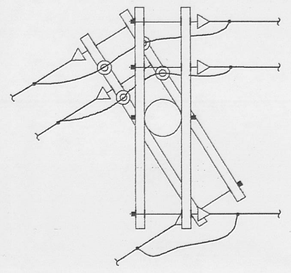

VIEW E
NTS

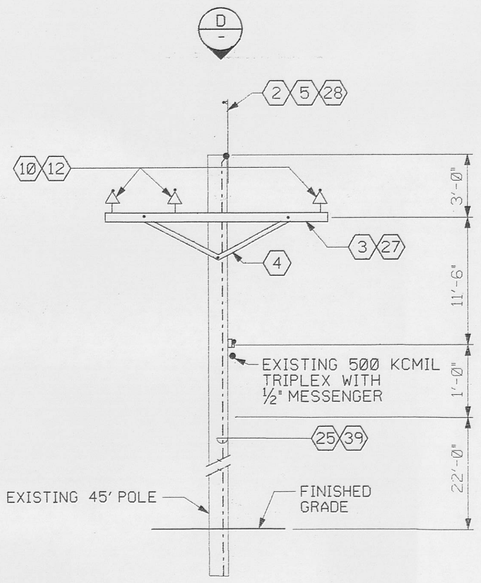

ELEVATION E9 (E0010) REF E0005
POLES 17, 18, 19, 20, & 21
NTS

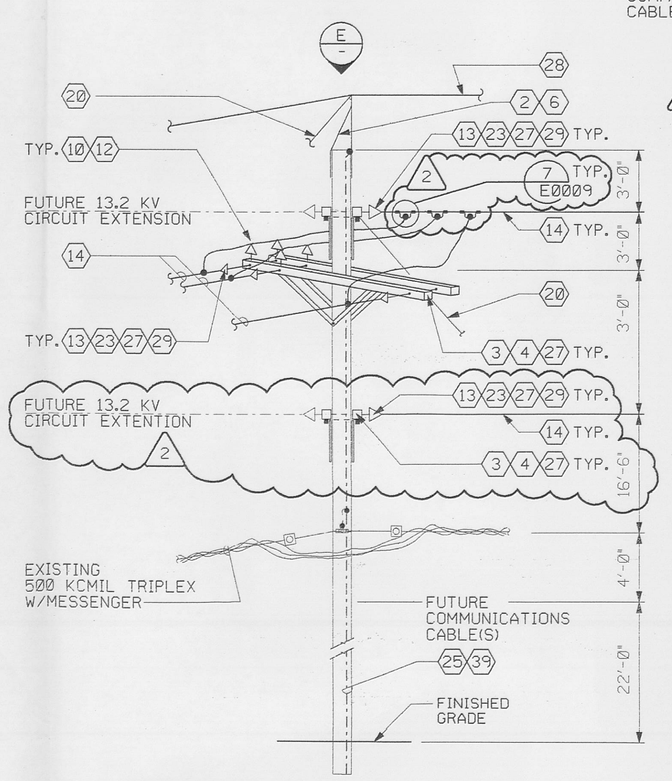

ELEVATION E10 (E0010) REF E0005
POLES 23R
NTS

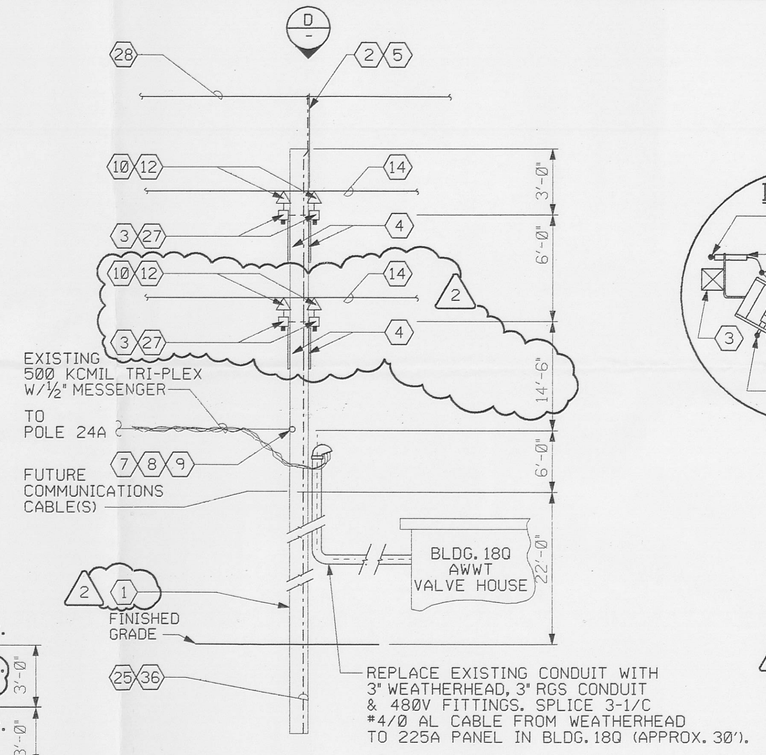

ELEVATION E11 (E0010) REF E0005
POLE 25R
NTS

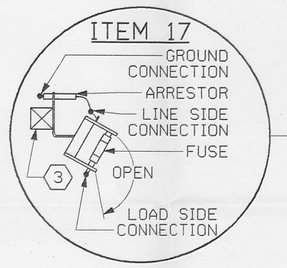

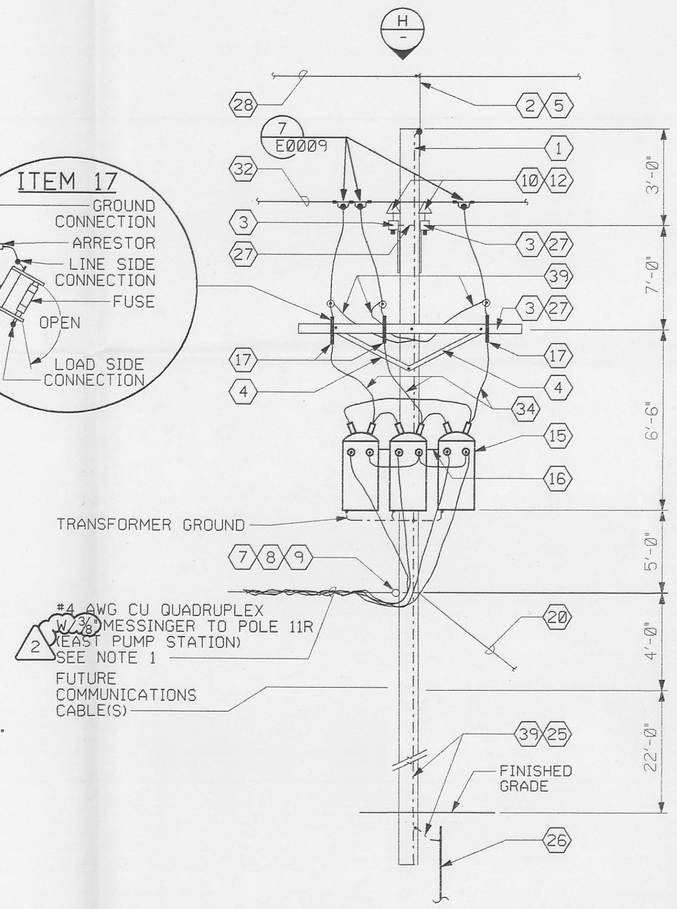

ELEVATION E12 (E0010) REF E0005
POLE 12R
NTS

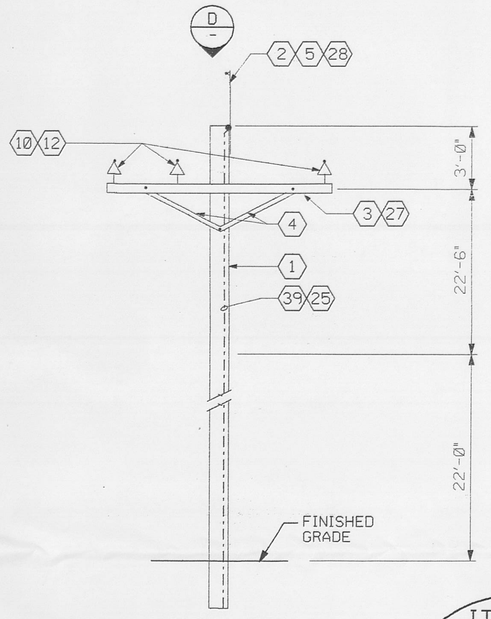

ELEVATION E13 (E0010) REF E0005
POLE 26, 30, & 33
NTS

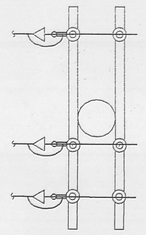

VIEW G
NTS

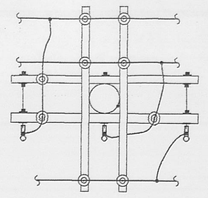

VIEW H
NTS

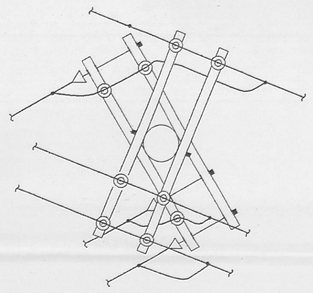

VIEW F
NTS

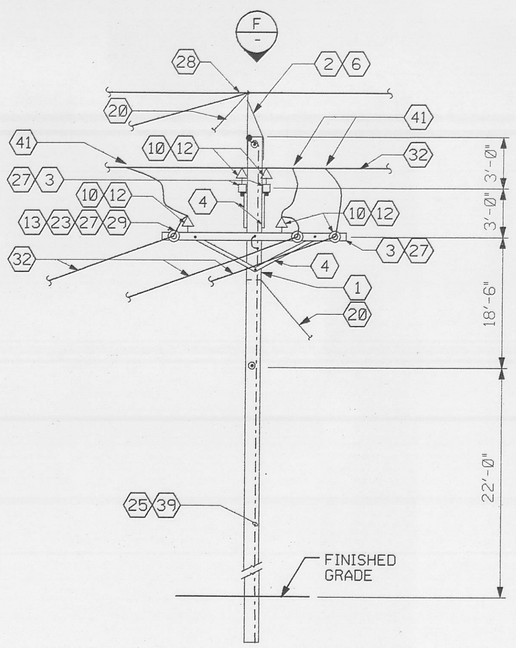

ELEVATION E14 (E0010) REF E0005
POLE 28, 33
NTS

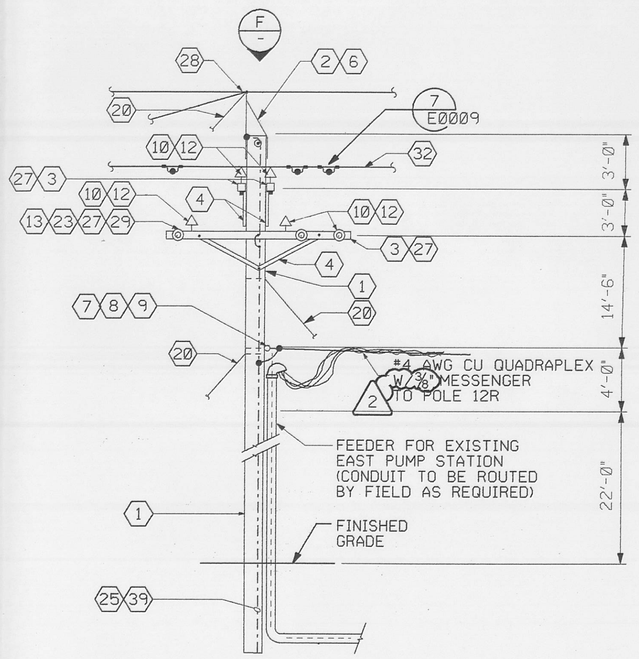

ELEVATION E15 (E0010) REF E0005
POLE 11R
NTS

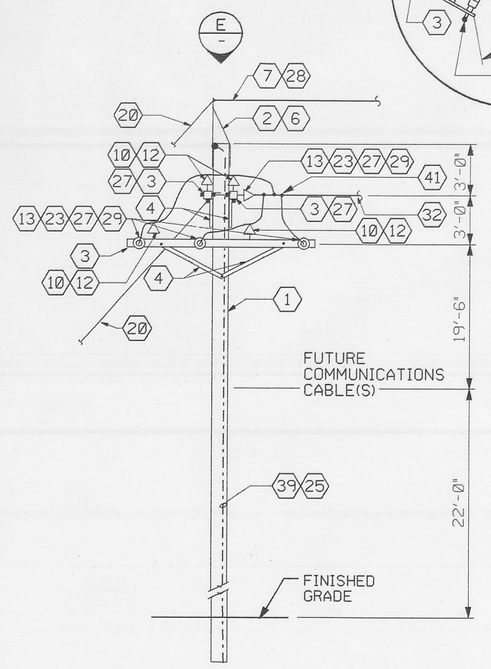

ELEVATION E16 (E0010) REF E0005
POLES 15R, 32, 34
NTS

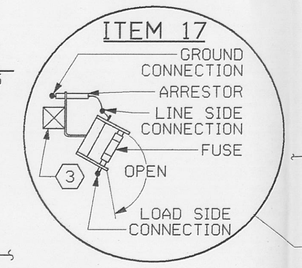

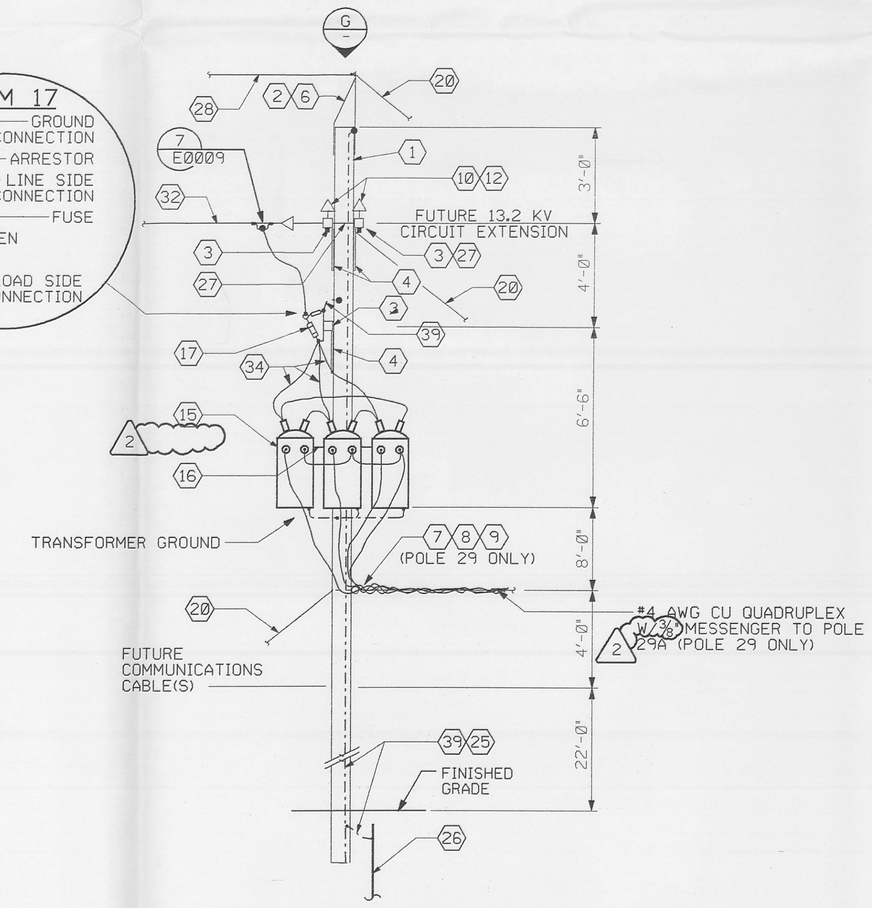

ELEVATION E17 (E0010) REF E0005
POLE 29 & 36
NTS

NOTES

1. EXTEND #4 AWG QUADRUPLEX CONDUCTORS FROM POLE #12R TRANSFORMER SECONDARY TO POLE #11R. FROM POLE #11R, EXTEND CONDUCTORS TO EXISTING PUMP AT POLE 11R. ENSURE MESSENGERS ARE CONNECTED TO GROUND AT POLE #12R ONLY.
2. SEE SHEET E0011 FOR MATERIAL LIST.

RELATED DWG NO.	DRAWING TITLE	SHEET NO.
92X-5900-X-00320	DRAWING INDEX	X0002
92X-5900-E-00404	SINGLE LINE DIAGRAM - WEST SIDE 13.2 KV FEEDERS	E0002
92X-5900-E-00379	OVERALL SITE POWER PLAN	E0005
92X-5900-E-00382	DETAILS - SHEET 1	E0009
92X-5900-E-00408	DETAILS - SHEET 3	E0011

000040

REV. NO.	ISSUE OR REVISION PURPOSE - DESCRIPTION	A-E	FERMCO	DATE
2	INCORPORATED FDF DCN #20401-011; CHANGED ½" MESSENGER TO ⅜"; 20401-015; ADDED EXTENSIONS TO MAIN FEEDERS	CS	N/A	10/13/97
1	ELECTRICAL WORK ADDED TO CONTRACT	CS	N/A	06/24/97
0	CERTIFIED FOR CONSTRUCTION	JMU	N/A	06/13/97

INITIALS AND DATE

UNITED STATES DEPARTMENT OF ENERGY
FERNALD ENVIRONMENTAL MANAGEMENT PROJECT

THIS DRAWING PREPARED BY
PARSONS
THE RALPH M. PARSONS CO. - PARSONS MAIN, INC. - ENGINEERING-SCIENCE, INC.
CINCINNATI, OHIO

PROJECT NAME
WASTE UNITS REMEDIATION
SOUTHERN WASTE UNITS - SITE PREPARATION PACKAGE

DRAWING TITLE
ELECTRICAL DETAILS SHEET 2

DRAWN BY	DATE	LEAD ENGINEER	DATE	CHECKED BY	DATE
T. COLLINS	01/05/97	J. L. COOPER	06/13/97	J.L. COOPER	01/28/97

PLANT/BLDG. NO.	FLOOR	SCALE	CLASS
		AS NOTED	

SUBMITTED FOR APPROVAL	FERMCO CRU APPROVAL	FERMCO PROJECT NO.
MIKE USHER 06/13/97	N/A	20400
A-E DATE	DATE	

DOE PROJECT NO.	FEMP PROJECT NO.	DRAWING INDEX CODE NO.	SHEET NO.	REV. NO.
	WBS 1.1.1.1.2.3.6 00-90701	92X-5900-E-00407	E0010	2

PREPARED UNDER PARSONS PROJECT ORDER NUMBER
SCEP/P0165

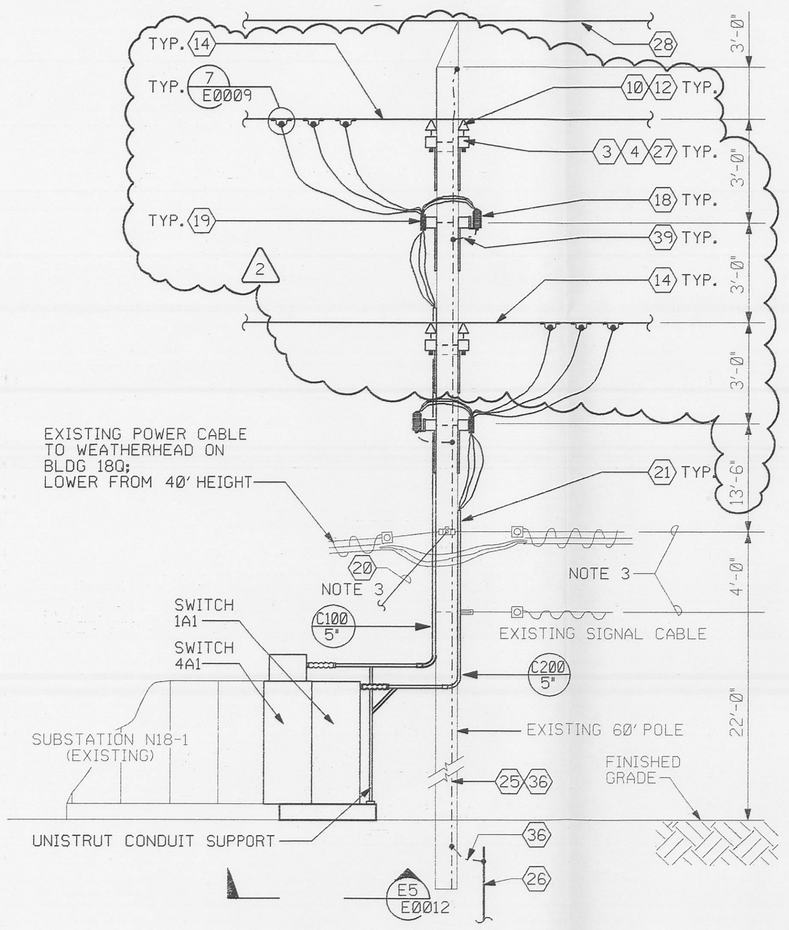

ELEVATION E18 E0011 REF E0005
POLE OP71
NTS

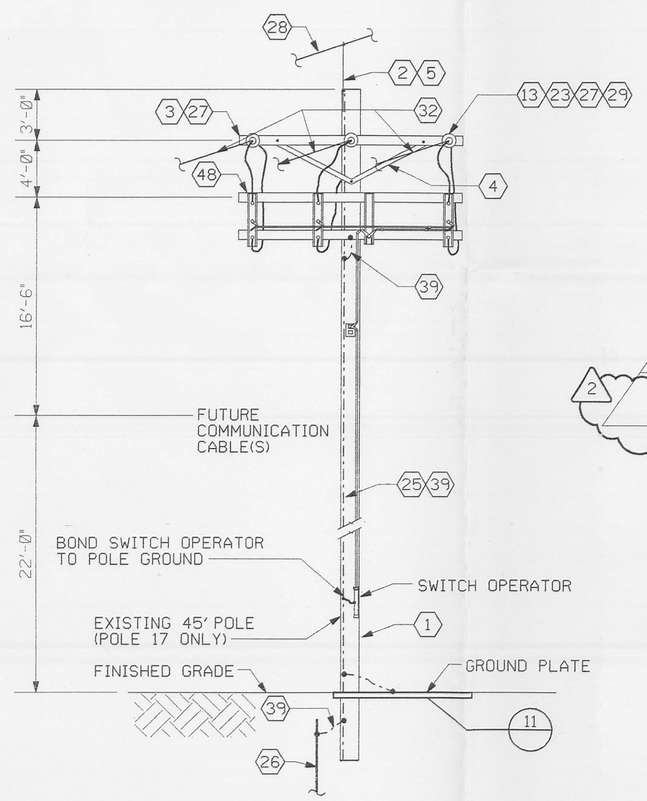

ELEVATION E19 E0011 REF E0005
POLE 13R
NTS

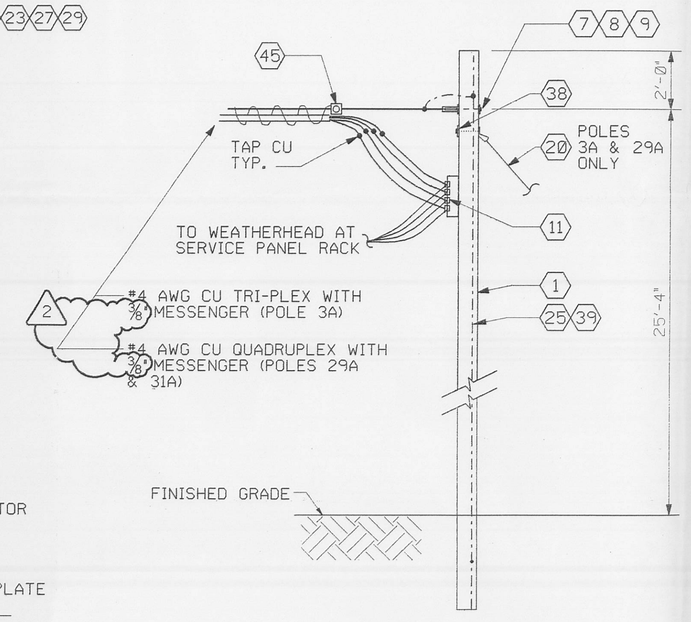

ELEVATION E20 E0011 REF E0005
POLE 3A, 29A, 31A
NTS

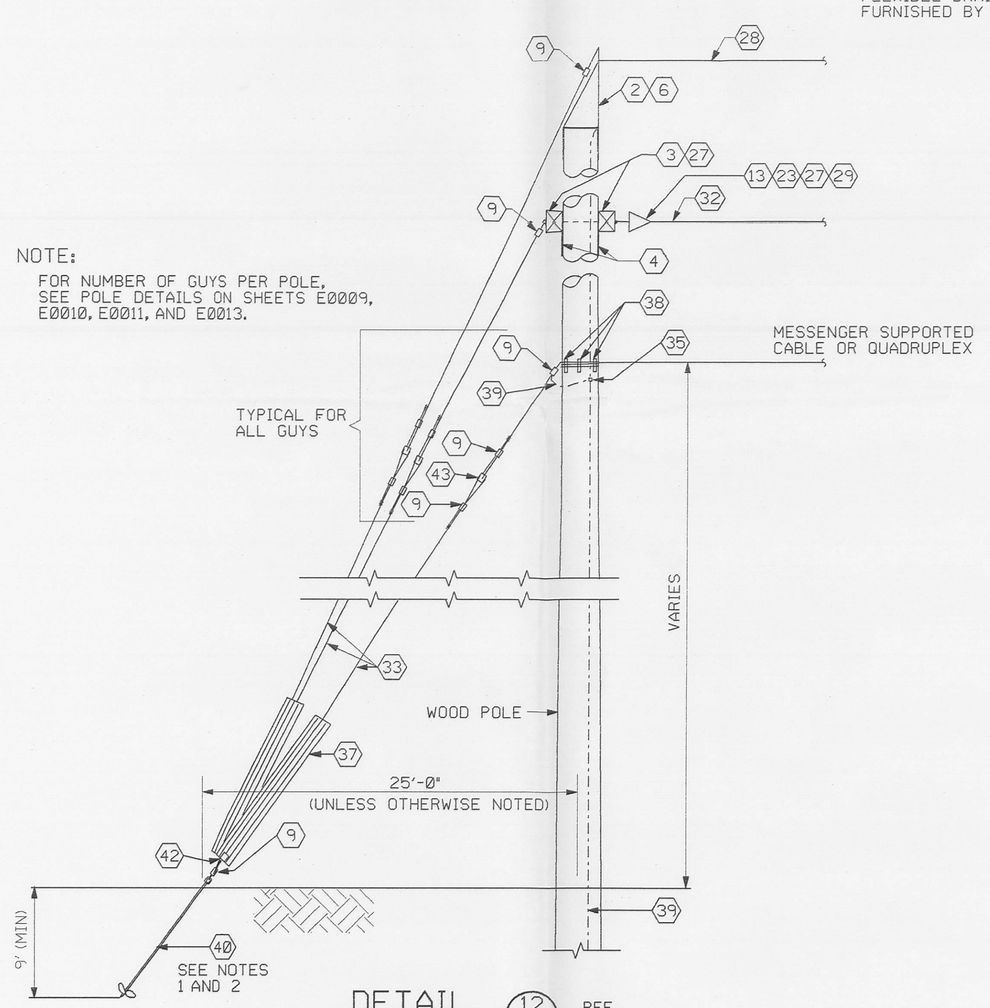

NOTE:
FOR NUMBER OF GUYS PER POLE, SEE POLE DETAILS ON SHEETS E0009, E0010, E0011, AND E0013.

DETAIL 12 E0011 REF E0009 E0010 E0012 E0013
GUY HARDWARE
NTS

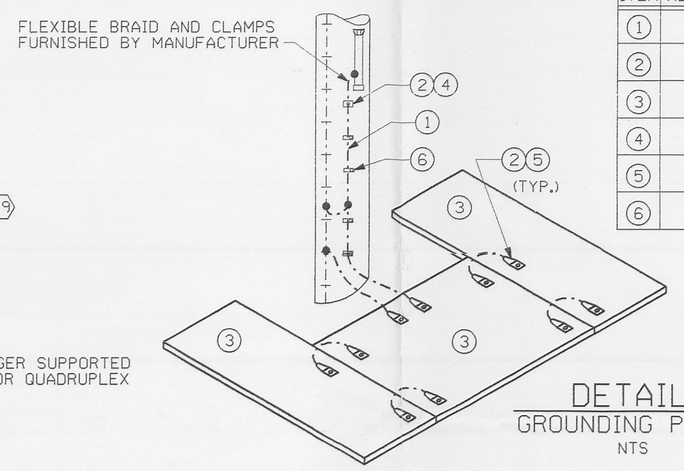

NOTE:
LOCATE GROUNDING PLATE TO PERMIT OPERATOR TO REMAIN ON PLATE AT ALL TIMES DURING OPENING OR CLOSING OF SWITCH. THIS ARRANGEMENT IS INTENDED AS A GUIDE ONLY. CONNECTIONS SHOULD BE MADE AS FIELD CONDITIONS PERMIT.

DETAIL 11 E0011 REF E0013 E0014
GROUNDING PLATE
NTS

LIST OF MATERIAL

ITEM	REQ'D.	DESCRIPTION
1	20	2/0 COPPER CABLE (FT.)
2	12	CONNECTORS FOR 2/0 COPPER
3	3	GROUNDING PLATFORM PLATE
4	1	3/8" × 1" EVERDUR BOLT NUT & LOCK WASHER
5	10	3/8" × 1½" EVERDUR BOLT NUT & LOCK WASHER
6	6	1½" LONG COPPERCLAD STAPLES

MATERIAL LIST

1. POLE, CLASS 2, PRESSURE TREATED, SOUTHERN YELLOW PINE. TO BE INSTALLED PER PARSONS SPEC #16370. SEE NOTE 5.
2. GROUND WIRE CLAMP, USED TO ATTACH STATIC WIRE TO BAYONET.
3. CROSSARM, 3½" × 4½" × 8'-0", PRESSURE TREATED DOUGLAS FIR.
4. CROSSARM BRACE, 5'-3" LONG × 1'-6" DROP, HOT DIP GALVANIZED.
5. STATIC WIRE SUPPORT, STRAIGHT BAYONET TYPE.
6. STATIC WIRE SUPPORT, CORNER BAYONET TYPE.
7. THIMBLE, FOR STATIC WIRE OR MESSENGER WIRE DEAD-END.
8. EYE BOLT, OVAL EYE TYPE, FOR DEAD-END, 5/8" DIA., WITH ONE SQUARE NUT, ADDITIONAL NUTS, WASHERS, AND LENGTH AS REQUIRED.
9. GUY GRIP, FOR STATIC WIRE, PREFORMED WIRE TYPE.
10. HIGH VOLTAGE FORGED STEEL PIN, FOR PIN TYPE INSULATORS 1" LEAD THREAD, LONG SHANK, WITH WASHERS AND NUTS AS REQUIRED.
11. SECONDARY RACK FOR 4 WIRES, MEDIUM DUTY WITH INSULATORS.
12. INSULATORS, PIN TYPE, 14.4 KV, GLAZED PORCELAIN, 1" THREADS ANSI CLASS 55-5, "F" NECK.
13. INSULATOR, DEAD-END TYPE, 6¼" LONG, 4⅜" DIA. ANSI CLASS 52-9, CLEVIS TYPE WITH STEEL HARDWARE.
14. AERIAL POWER CONDUCTOR #336 KCMIL, ACSR "MERLIN".
15. TRANSFORMER(S), POLE MOUNTED, SEE SINGLE LINE FOR RATINGS AND QUANTITIES. 2
16. EQUIPMENT MOUNT, FOR 3 POLE MOUNTED, TRANSFORMERS DOUBLE-BANDED ALUMINUM CLUSTER MOUNT W/ GND LUG.
17. FUSED CUTOUT ARRESTER COMBINATION UNIT, CUTOUT RATED 15KV, 200 AMPS, 12,000 AMPS IC, WITH CROSSARM MOUNTING HARDWARE. FOR ARRESTER, SEE ITEM 18, THIS MATERIAL LIST.
18. SURGE ARRESTER, DIRECT CONNECTED, 15KV, RISER POLE TYPE, METAL OXIDE VALVE W/CROSSARM MOUNTING HARDWARE.
19. TERMINATOR, 15 KV, SIZED TO FIT INSULATION DIAMETER.
20. FOR GUY INSTALLATION, SEE DETAIL 12 ON THIS DRAWING.
21. CABLE SUPPORT, CONDUIT TOP, OUTDOOR, WATERTIGHT, FILL WITH SEALING COMPOUND.
22. CLAMP, SUSPENSION, FOR 3/8" MESSENGER.
23. EYENUT, 5/8" BOLT DIA.
24. (FUTURE) COMMUNICATIONS CABLE, LASHED TO 3/8" MESSENGER. SEE NOTE 4.
25. STAPLE, COPPERCLAD, 1½" LONG.
26. GROUND ROD, ¾" DIAMETER × 10' LONG, COPPERWELD INSTALLED 12" MIN. BELOW FINISHED GRADE.
27. BOLTS, DOUBLE ARMING, SQUARE NUTS, 5/8" DIA. × LENGTH AS REQUIRED.
28. 3/8" DIAMETER, 7X8, STANDARD CONSTRUCTION, GALVANIZED STEEL STRAND.
29. DISTRIBUTION TYPE DEAD-END GRIP, FOR USE ON ACSR CONDUCTOR, SIZE FOR CONDUCTOR. 2
30. ARMOR ROD, FOR USE ON #32, THIS MATERIAL LIST.
31. CONDUCTOR TIE ROD FOR ACSR CONDUCTOR TO "F" NECK PIN TYPE INSULATOR. SIZE TIE RODS TO FIT OVER ARMOR ROD ASSEMBLY.
32. AERIAL POWER CONDUCTOR, #2 AWG, ACSR, "SPARROW".
33. 5/8" DIA. GALVANIZED STEEL STRUCTURAL ROPE WITH A MINIMUM BREAKING STRENGTH OF 15 TONS.
34. #2 AWG BARE CU.
35. COMPRESSION GROUND FITTING.
36. #2 AWG, BARE SOLID COPPER GROUND CONDUCTOR.
37. GUY WIRE MARKER, HALF ROUND, 2" WIDE, 84" LONG, W/ REQ'D HARDWARE, UV RESISTANT.
38. GUY AND LOAD PLATE, W/ ANGLE THIMBLE EYE BOLT.
39. #4 AWG, BARE SOLID COPPER GROUND CONDUCTOR.
40. 12" DIA. HELICAL SCREW TYPE GUY ANCHOR WITH MINIMUM PULLOUT CAPACITY OF 23000 POUNDS.
41. COMPRESSION FITTING
42. ½" THREADED ROD WITH NUTS, LENGTH AS REQUIRED.
43. GUY STRAIN INSULATOR, ANSI CLASS 54-4, FOR 5/8" GUY WIRE.
44. CROSSARM CORNER TYPE PIN, MALLABLE IRON, GALVANIZED 1" THREAD MOUNTING WITH HARDWARE.
45. LASHING WIRE CLIP, SIZE AS REQUIRED.
46. TRANSFORMER, POLE MOUNTED, THREE 37.5 KVA, 13.2KV - 480V, 1 PHASE, W/ 2 - 2 1/2% TAPS ABOVE AND 2 - 2 1/2% TAPS BELOW, OIL FILLED.
47. 600A, 15KV, 3-PH, 20 KAYMME POLE MOUNTED, MANUAL, GANG OPERATED (LOAD BREAK FUSED SWITCH) 806 FUSE.
48. 600A, 15KV, 3-PH, 20 KAYMME POLE MOUNTED, MANUAL, GANG OPERATED (LOAD BREAK SWITCH).
49. AERIAL POWER CONDUCTOR, 336 kcmil, ASCR, "MERLIN".

NOTES

1. INSTALL SOIL ANCHORS ACCORDING TO MANUFACTURER'S INSTRUCTIONS. DEPTH CALCULATION BASED ON SOIL DATA FOR MINIMUM BLOW COUNT OF 7. IF BLOW COUNT IS LESS THAN 7 THEN CONTACT FDF.
2. PRIOR TO INSTALLATION OF EARTH ANCHORS, VERIFY LOCATION OF NEARBY UNDERGROUND UTILITIES AND PUSH SMALL DIAMETER STEEL SOIL PROBE THROUGH AREA TO VERIFY THAT NO UNDERGROUND OBSTRUCTIONS ARE PRESENT.
3. ADJUST ELEVATIONS OF EXISTING POWER/SIGNAL CABLE(S) AND GUY TO THOSE SHOWN.
4. PLACE SIGNAL/COMMUNICATIONS CABLE SIX (6) FEET MINIMUM BELOW 13.2KV POWER LINE CONDUCTORS; FOUR (4) FEET MINIMUM BELOW 600V (OR LESS) POWER CONDUCTORS; AND TWO (2) FEET MINIMUM BELOW POLE-GUY ATTACHMENTS.
5. SEE SHEET NO. E0005 "POWER POLE COORDINATES - POLE HEIGHTS" FOR POLE LENGTHS.

SAG AND TENSION TABLE

200-FT MAXIMUM SPAN - 28.5' INITIAL SAG AT 60 DEG F

CONDUCTOR ACSR BARE (KCM OR AWG)	ULTIMATE STRENGTH (LB)	CONDUCTOR AREA (SQ IN)	WEIGHT PER 1000 FOOT (LB)	15 DEG F LOADING			INITIAL STRINGING SAG AND TENSION										FINAL SAG AND TENSION					
							15 DEG F		30 DEG F		60 DEG F		90 DEG F		120 DEG F		15 DEG F		60 DEG F		120 DEG F	
				S	T	% ULT	S	T	S	T	S	T	S	T	S	T	S	T	S	T	S	T
#2 (SPARROW)	2,850	0.0608	91.3	44.4	815	29.2	16.6	338	19.7	277	28.5	195	34.6	151	43.8	128	19.3	289	32.4	170	46.3	122

S = SAG IN INCHES
T = TENSION IN POUNDS
(6/1) = STRANDS
AVERAGE SPAN = 146.6 FT
RULING SPAN = 182 FT
MAXIMUM SPAN = 200 FT

HEAVY LOADING AREA, NESC C2

RELATED DWG NO.	DRAWING TITLE	SHEET NO.
92X-5900-X-00320	DRAWING INDEX	X0002
92X-5900-E-00379	OVERALL SITE POWER PLAN	E0005
92X-5900-E-00382	DETAILS - SHEET 1	E0009
92X-5900-E-00407	DETAILS - SHEET 2	E0010
92X-5900-E-00409	DETAILS - SHEET 4	E0012
92X-5900-E-00376	DETAILS - SHEET 5	E0013
92X-5900-E-00454	DETAILS - SHEET 6	E0014

000041

REV. NO.	ISSUE OR REVISION PURPOSE - DESCRIPTION	A-E	FERMCO	DATE
2	INCORPORATED FDF DCN #20401-011; CHANGED ½" MESSENGER TO 3/8"; 20401-015; ADDED EXTENSION TO MAIN FEEDERS	CS	N/A	10/9/97
1	ELECTRICAL WORK ADDED TO CONTRACT	CS	N/A	06/24/97
0	CERTIFIED FOR CONSTRUCTION	JMU	N/A	06/13/97

INITIALS AND DATE

UNITED STATES DEPARTMENT OF ENERGY
FERNALD ENVIRONMENTAL MANAGEMENT PROJECT

THIS DRAWING PREPARED BY
PARSONS
THE RALPH M. PARSONS CO. - PARSONS MAIN, INC. - ENGINEERING-SCIENCE, INC.
CINCINNATI, OHIO

PROJECT NAME
WASTE UNITS REMEDIATION
SOUTHERN WASTE UNITS - SITE PREPARATION PACKAGE

DRAWING TITLE
ELECTRICAL DETAILS SHEET 3

DRAWN BY	DATE	LEAD ENGINEER	DATE	CHECKED BY	DATE
T. COLLINS	01/05/97	J. L. COOPER	06/13/97	J. L. COOPER	01/28/97

PLANT/BLDG. NO.	FLOOR	SCALE	CLASS
		AS NOTED	

SUBMITTED FOR APPROVAL	FERMCO CRU APPROVAL	FERMCO PROJECT NO.
MIKE USHER 06/13/97	N/A	20400
A-E DATE	DATE	

PREPARED UNDER PARSONS PROJECT ORDER NUMBER	DOE PROJECT NO.	FEMP PROJECT NO.	DRAWING INDEX CODE NO.	SHEET NO.	REV. NO.
SCEP/P0165		WBS 1.1.1.1.2.3.6 00-90701	92X-5900-E-00408	E0011	2

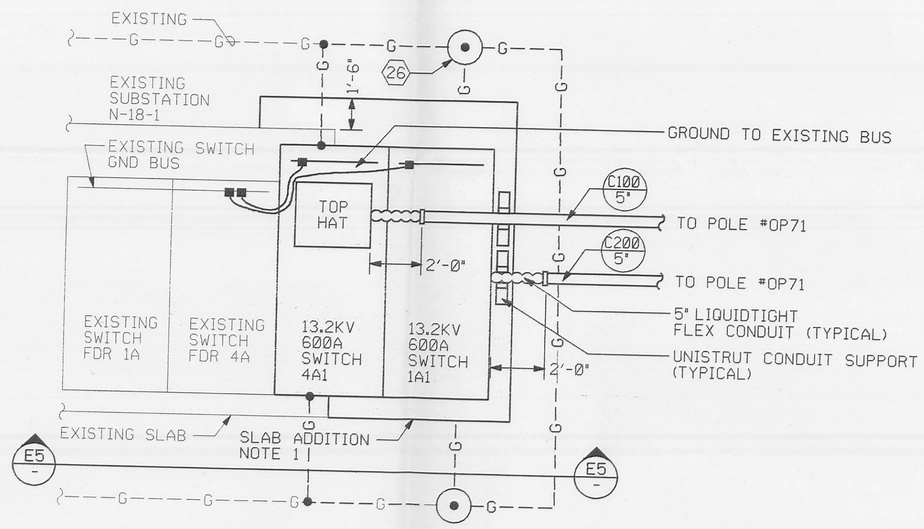

SWITCHGEAR PLAN
NTS

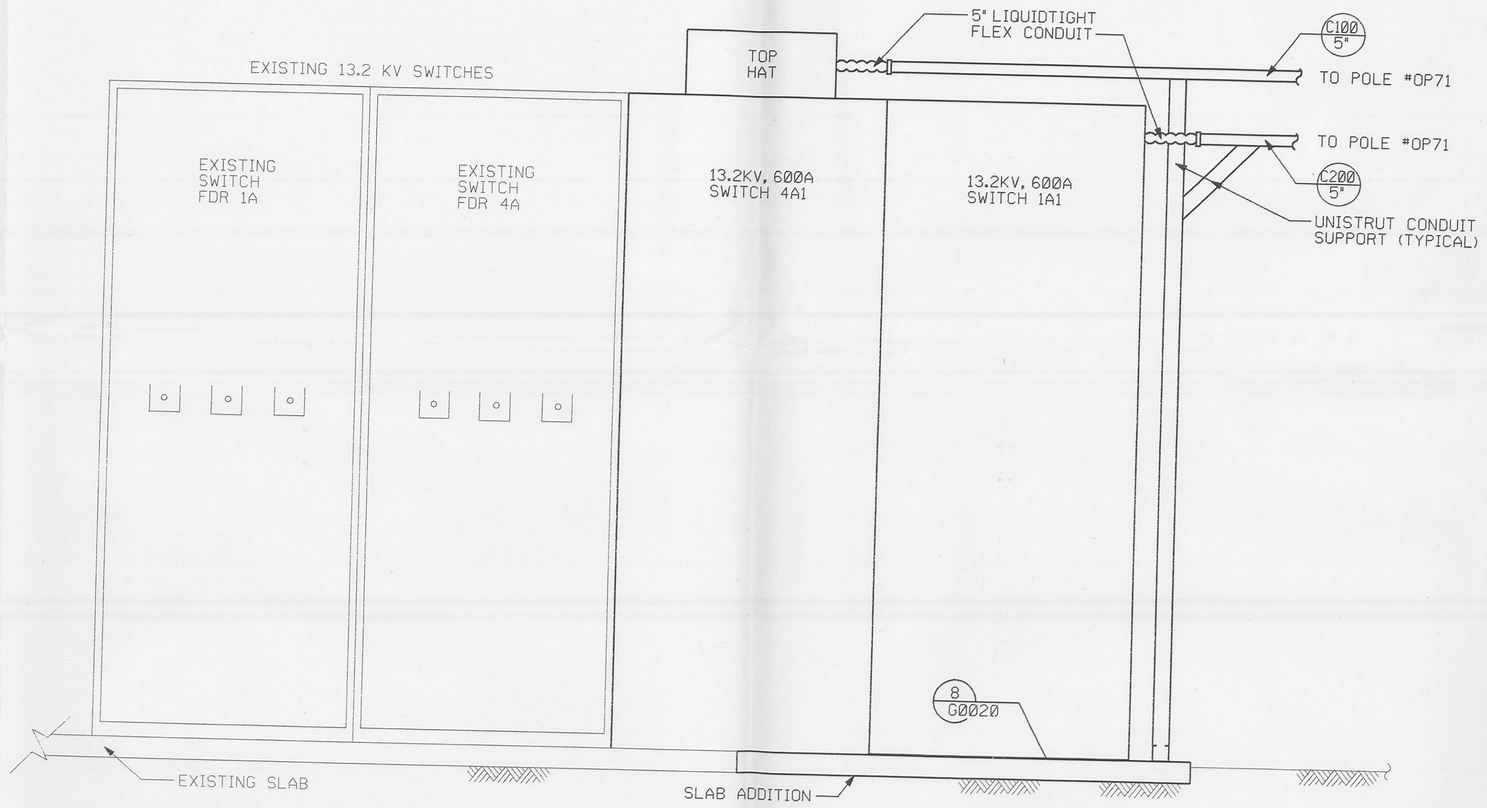

ELEVATION E
SWITCHGEAR
NTS

NOTES

1. EXTEND SLAB 6" THICK, 6' EAST TOWARD POLE #40 AND 1'-6" NORTH AS INDICATED. SEE G0020, DETAIL 8.
2. DIMENSION TO BE AT LEAST CABLE BENDING RADIUS PROVIDED BY CABLE MANUFACTURER, MINIMUM 1'-6". TOP HAT TO BE 1'-6" HIGH, 2' X 2'.
3. CONNECT LINE SIDE OF SWITCH TO LINE SIDE OF EXISTING SWITCH USING CONNECTION KIT FROM SIEMENS-ITE AS SPECIFIED. CONNECT PRIMARY CABLE TO LOAD SIDE OF SWITCH WITH MEDIUM VOLTAGE STRESS CONE TERMINATIONS. ALLOW SUFFICIENT CABLE FOR FUTURE CONNECTION TO LOAD SIDE OF SWITCH WITHOUT REMOVING CABLE FROM POLE #40.
4. FOR HIGH AND LOW LEVEL PROBE SETTINGS AND LIFT STATION DETAILS SEE CIVIL SHEET NO. G0013.

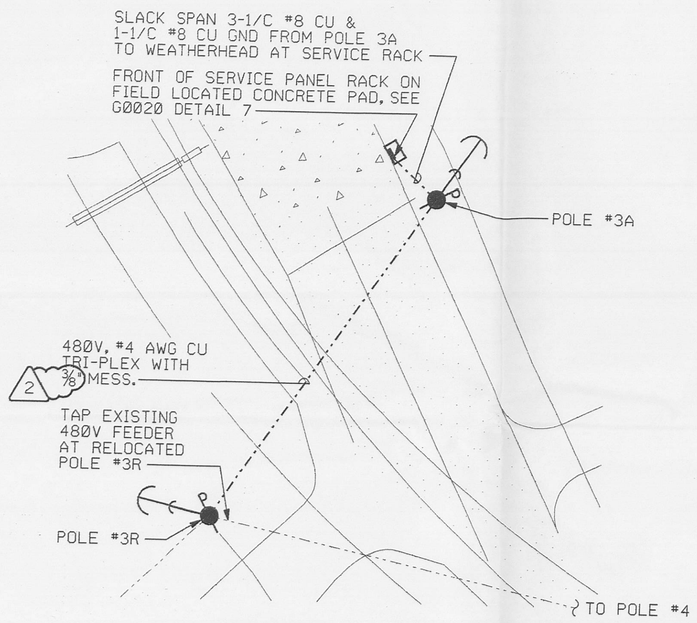

DETAIL 2 REF
WHEEL WASH E0012 E0005
NTS

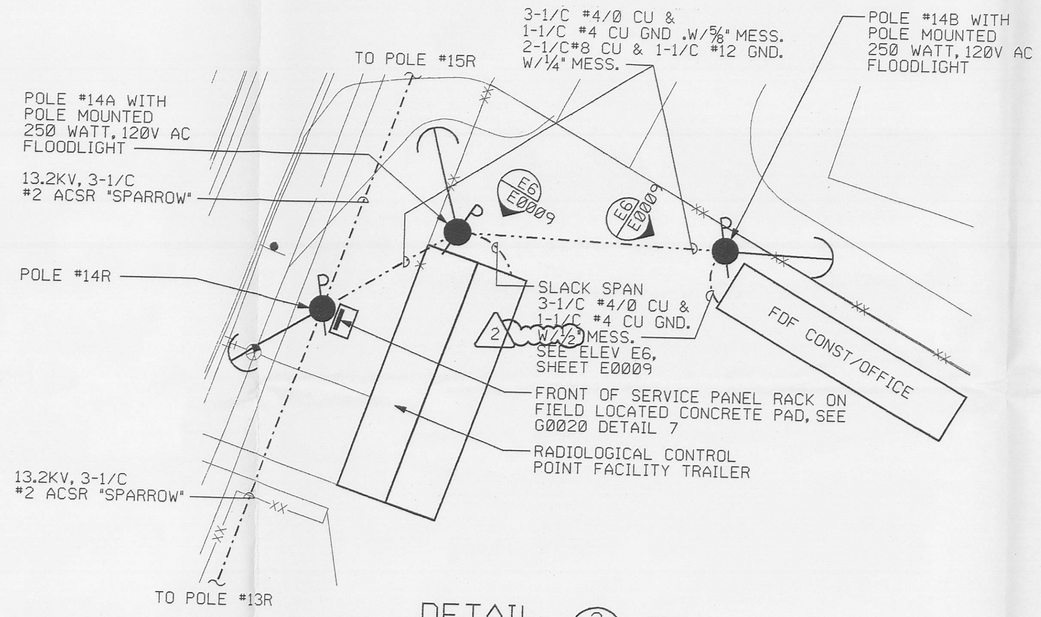

DETAIL 3 REF
SUPPORT AREA E0012 E0005
NTS

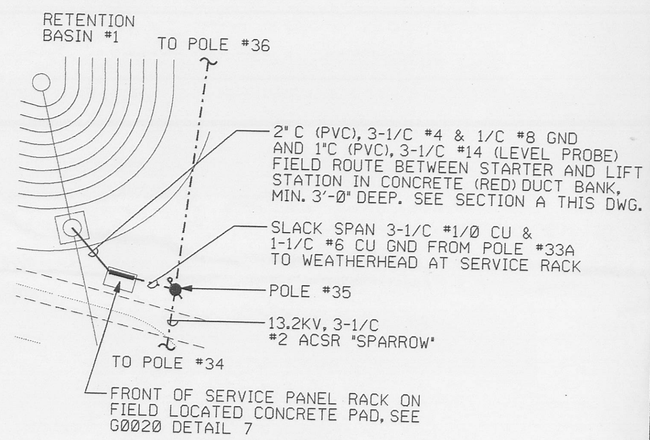

DETAIL 4 REF
LIFT STATION NO.1 E0012 E0005
NTS

RELATED DWG NO.	DRAWING TITLE	SHEET NO.
92X-5900-X-00320	DRAWING INDEX	X0002
92X-5900-E-00405	SYMBOLS AND LEGEND	E0001
92X-5900-E-00379	OVERALL SITE POWER PLAN	E0005
92X-5900-E-00408	DETAILS - SHEET 3	E0011
92X-5900-G-00368	CIVIL - EROSION AND SEDIMENT CONTROL - SHEET 2 OF 2	G0013
92X-5900-G-00309	CIVIL - MISCELLANEOUS DETAILS	G0020
92X-5900-E-00382	DETAILS - SHEET 1	E0009

000042

REV. NO.	ISSUE OR REVISION PURPOSE - DESCRIPTION	A-E	FERMCO	DATE
2	INCORPORATED FDF DCN #20401-011; CHANGED 1/2" MESSENGER TO 3/8", 5/8" TO 1/2"	CS	N/A	10/29/97
1	ELECTRICAL WORK ADDED TO CONTRACT	CS	N/A	06/24/97
0	CERTIFIED FOR CONSTRUCTION	JMU	N/A	06/13/97

INITIALS AND DATE

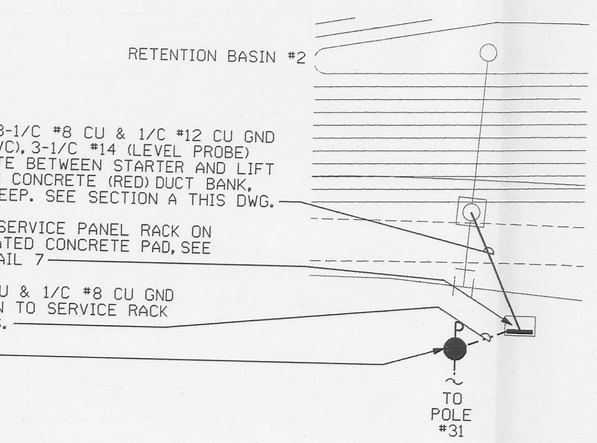

DETAIL 5 REF
LIFT STATION NO.2 E0012 E0005
NTS

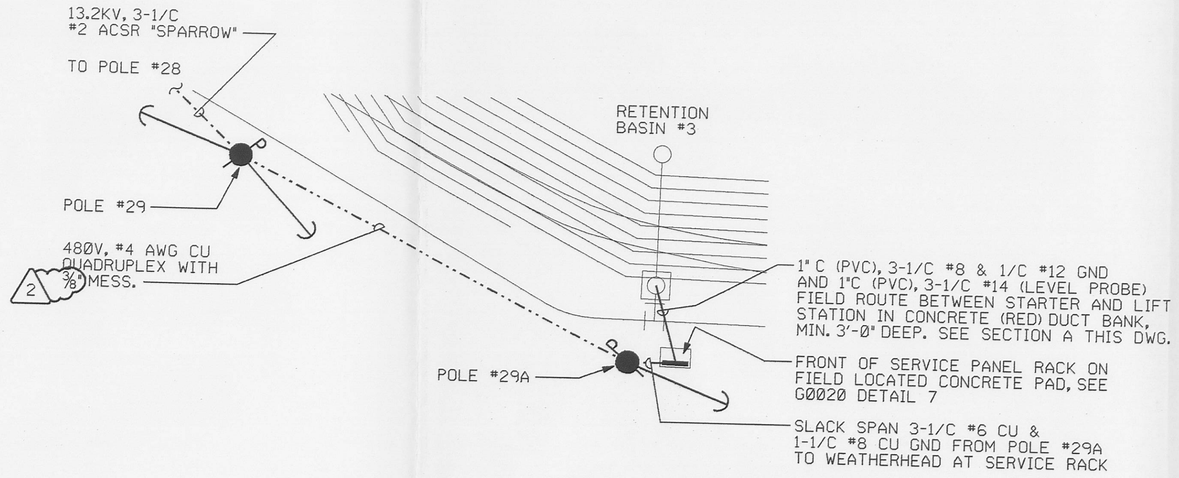

DETAIL 6 REF
LIFT STATION NO.3 E0012 E0005
NTS

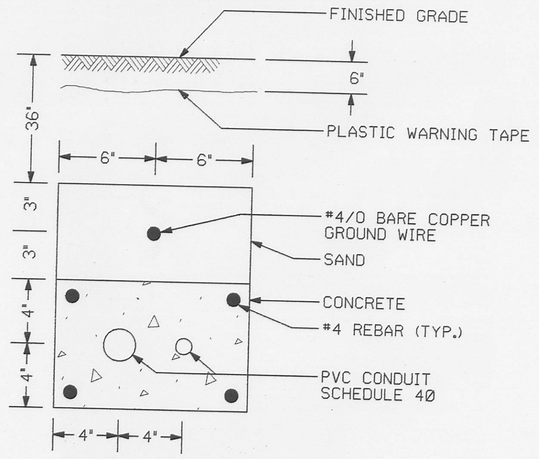

SECTION A
UNDERGROUND DUCTBANK
NTS

UNITED STATES
DEPARTMENT OF ENERGY
FERNALD ENVIRONMENTAL MANAGEMENT PROJECT

THIS DRAWING PREPARED BY
PARSONS
THE RALPH M. PARSONS CO. - PARSONS MAIN, INC. - ENGINEERING-SCIENCE, INC.
CINCINNATI, OHIO

PROJECT NAME
WASTE UNITS REMEDIATION
SOUTHERN WASTE UNITS - SITE PREPARATION PACKAGE

DRAWING TITLE
ELECTRICAL DETAILS
SHEET 4

DRAWN BY	DATE	LEAD ENGINEER	DATE	CHECKED BY	DATE
T. COLLINS	01/08/97	J. L. COOPER	06/13/97	J. L. COOPER	01/28/97

PLANT/BLDG. NO. | FLOOR | SCALE: NOT TO SCALE | CLASS

SUBMITTED FOR APPROVAL: MIKE USHER 06/13/97 (A-E, DATE)
FERMCO CRU APPROVAL: N/A (DATE)
FERMCO PROJECT NO.: 20400

DOE PROJECT NO. | FEMP PROJECT NO.: WBS 1.1.1.1.2.3.6 00-00701 | DRAWING INDEX CODE NO.: 92X-5900-E-00408 | SHEET NO. | REV. NO.

PREPARED UNDER PARSONS PROJECT ORDER NUMBER: SCEP/PO165

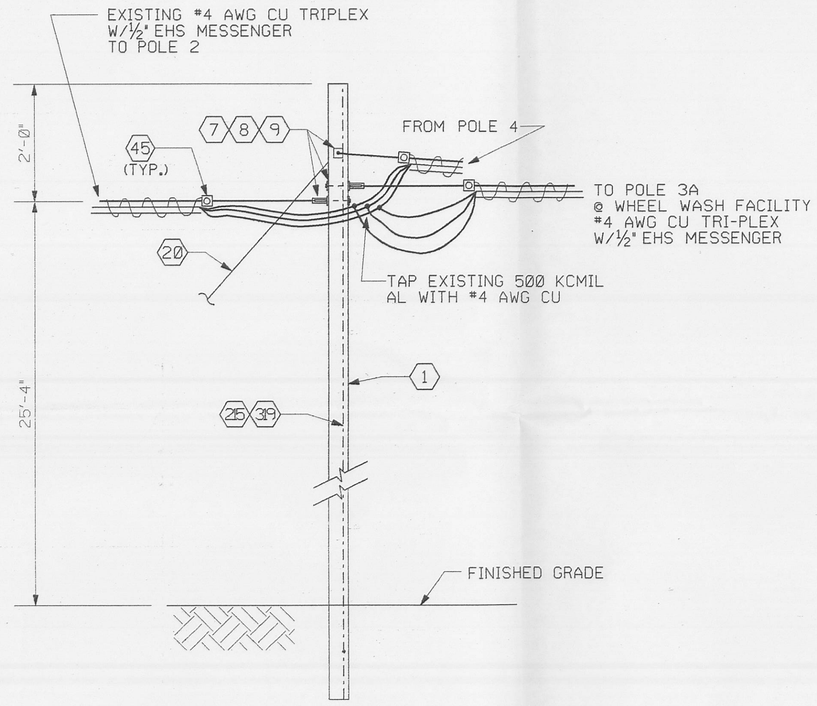

ELEVATION E21 / E0013 REF E0005
POLE 3R
NTS

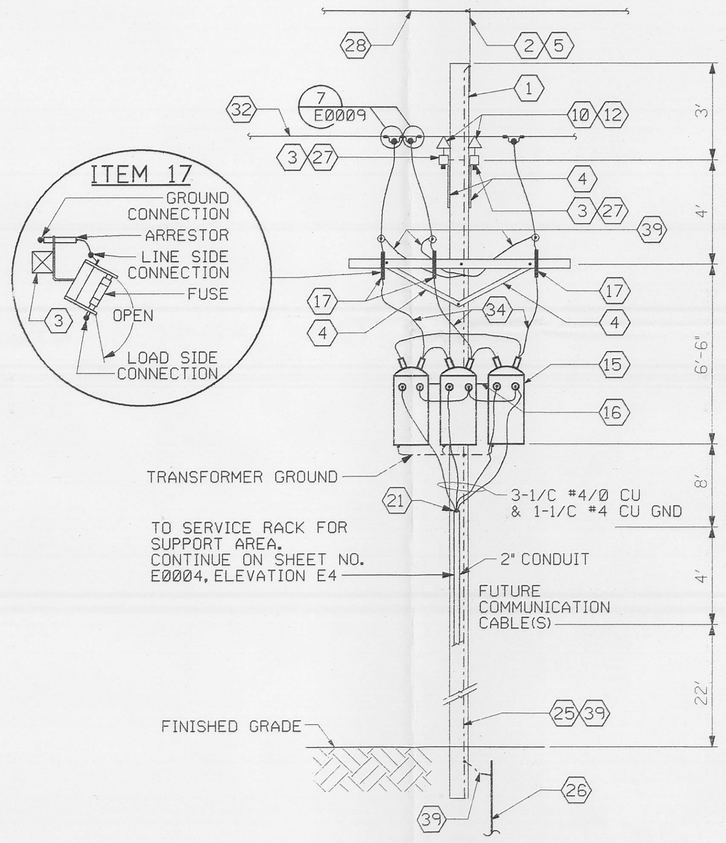

ELEVATION E22 / E0013 REF E0005
POLE 14R
NTS

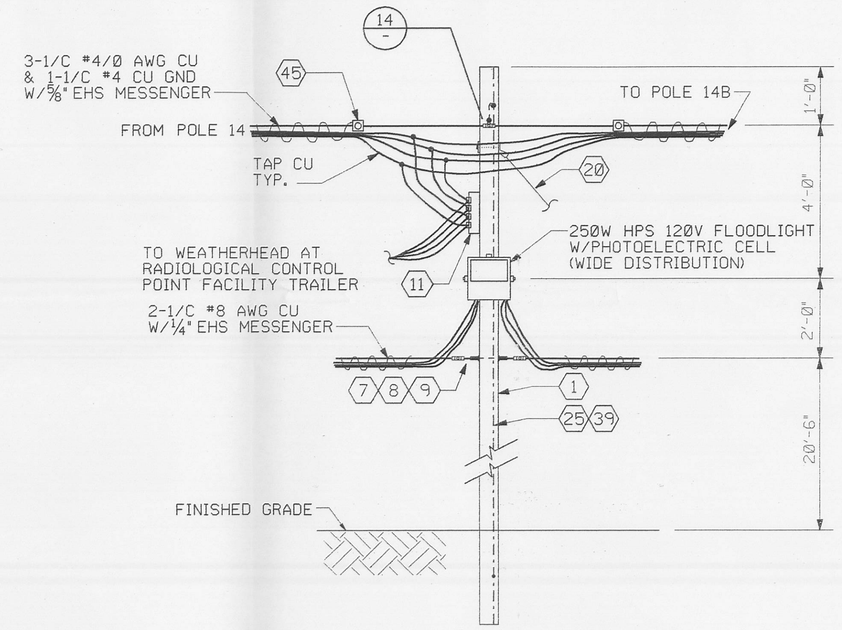

ELEVATION E23 / E0013 REF E0005
POLE 14A
NTS

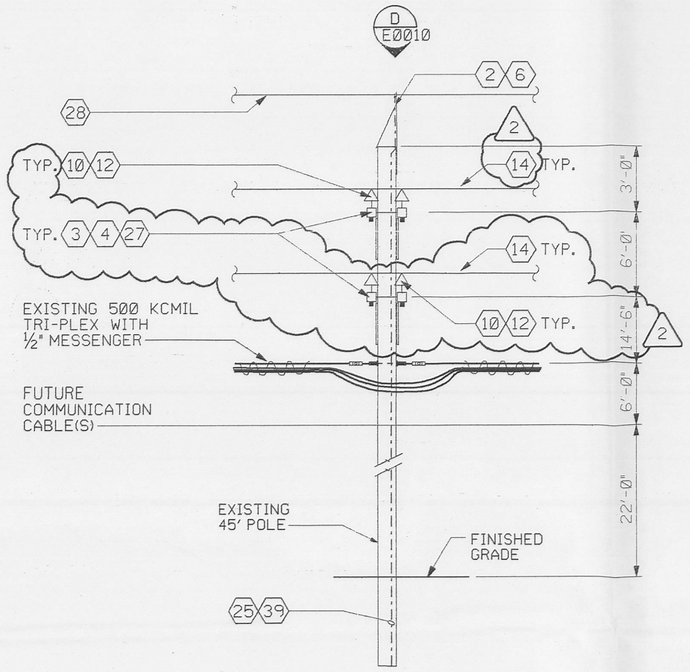

ELEVATION E28 / E0013 REF E0005
POLE 24R
NTS

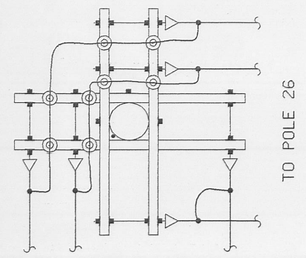

VIEW A
NTS

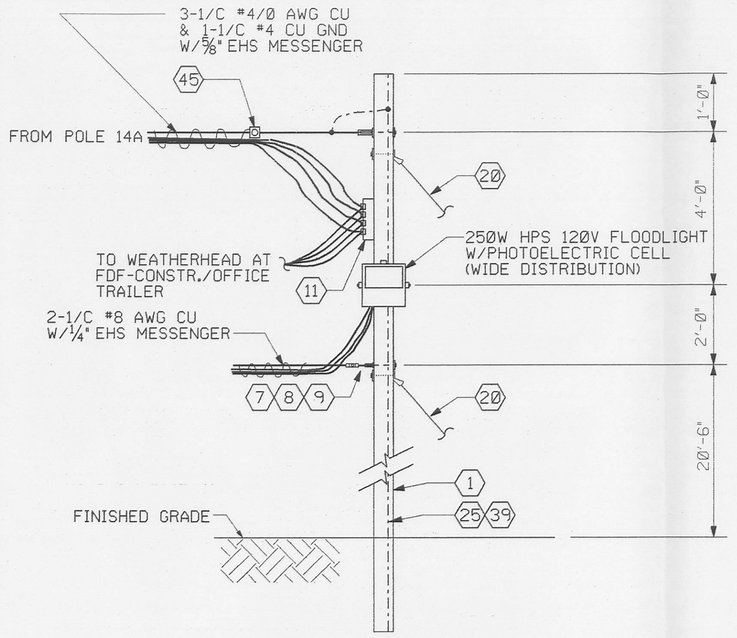

ELEVATION E24 / E0013 REF E0005
POLE 14B
NTS

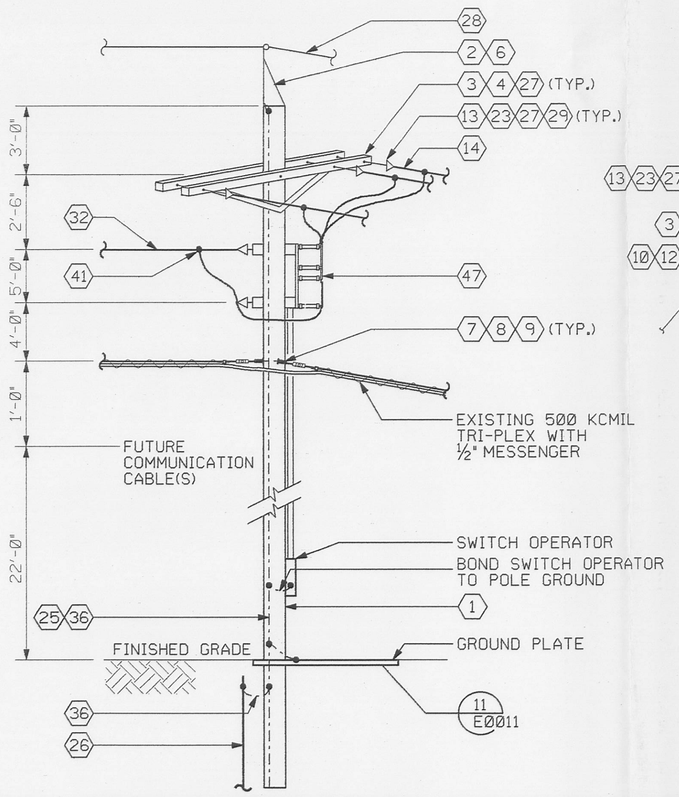

ELEVATION E25 / E0013 REF E0005
POLE 22
NTS

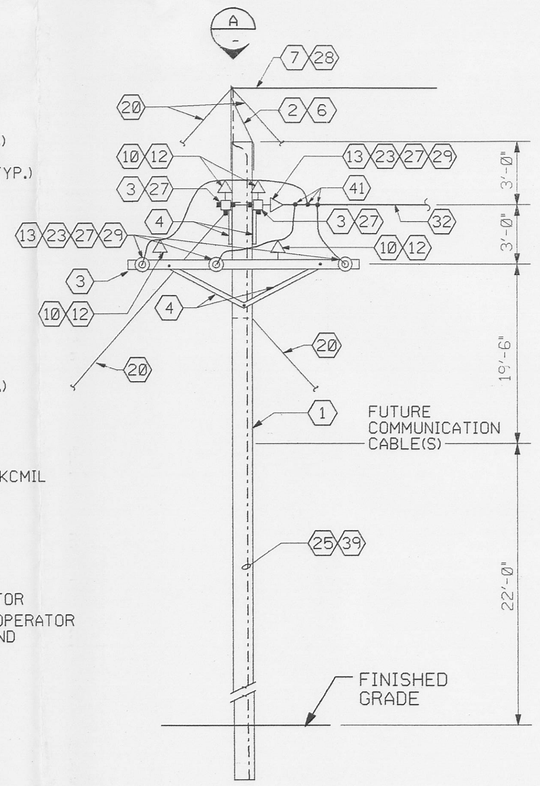

ELEVATION E26 / E0013 REF E0005
POLE 27
NTS

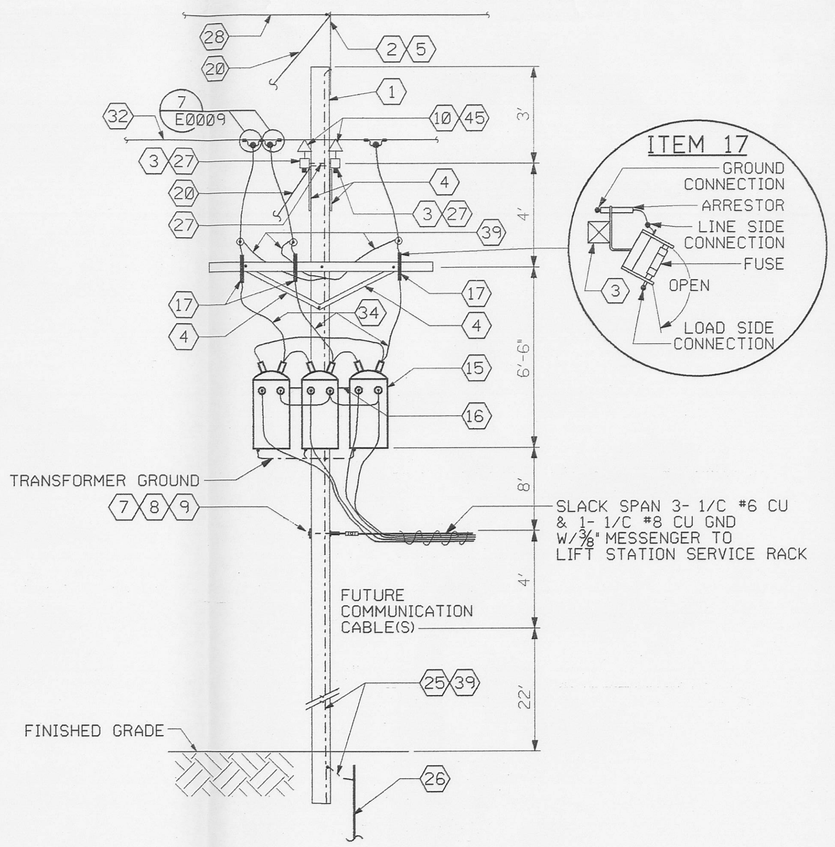

ELEVATION E27 / E0013 REF E0005
POLE 35
NTS

NOTES

1. SEE SHEET E0011 FOR MATERIAL LIST.

RELATED DWG NO.	DRAWING TITLE	SHEET NO.
92X-5900-X-00320	DRAWING INDEX	X0002
92X-5900-E-00379	OVERALL SITE POWER PLAN	E0005
92X-5900-E-00382	DETAILS - SHEET 1	E0009
92X-5900-E-00408	DETAILS - SHEET 3	E0011

006043

REV. NO.	ISSUE OR REVISION PURPOSE - DESCRIPTION	A-E	FERMCO	DATE
2	INCORPORATED FDF DCN #20401-015; ADDED EXTENSION OF MAIN FEEDERS	CS	N/A	10/9/97
1	ELECTRICAL WORK ADDED TO CONTRACT	CS	N/A	06/24/97
0	CERTIFIED FOR CONSTRUCTION	JMU	N/A	06/13/97

INITIALS AND DATE

UNITED STATES DEPARTMENT OF ENERGY
FERNALD ENVIRONMENTAL MANAGEMENT PROJECT

THIS DRAWING PREPARED BY
PARSONS
THE RALPH M. PARSONS CO. - PARSONS MAIN, INC. - ENGINEERING-SCIENCE, INC.
CINCINNATI, OHIO

PROJECT NAME
WASTE UNITS REMEDIATION
SOUTHERN WASTE UNITS - SITE PREPARATION PACKAGE

DRAWING TITLE
ELECTRICAL DETAILS SHEET 5

DRAWN BY	DATE	LEAD ENGINEER	DATE	CHECKED BY	DATE
T. COLLINS	01/05/97	J. L. COOPER	06/13/97	J. L. COOPER	01/28/97

PLANT/BLDG. NO.	FLOOR	SCALE	CLASS
		AS NOTED	

SUBMITTED FOR APPROVAL (A-E / DATE)	FERMCO CRU APPROVAL (DATE)	FERMCO PROJECT NO.
MIKE USHER 06/13/97	N/A	20400

PREPARED UNDER PARSONS PROJECT ORDER NUMBER	DOE PROJECT NO.	FEMP PROJECT NO.	DRAWING INDEX CODE NO.	SHEET NO.	REV. NO.
SCEP/P0165		WBS 1.1.1.1.1.2.3.6 00-90701	92X-5900-E-00376	E0013	2

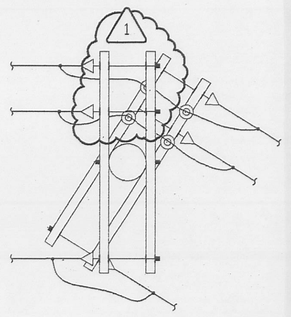

VIEW A
NTS

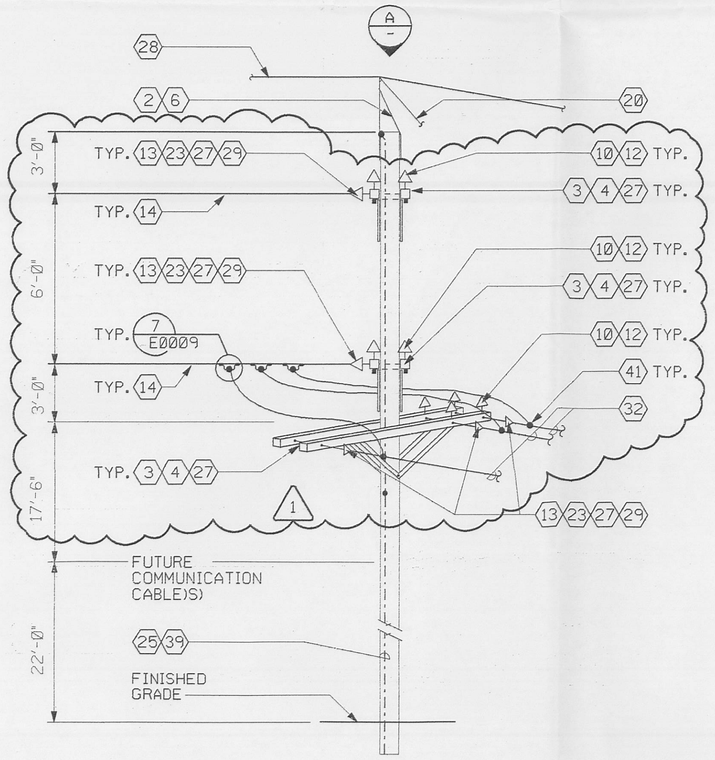

ELEVATION POLE OP67 (E1, E0014) REF E0005
NTS

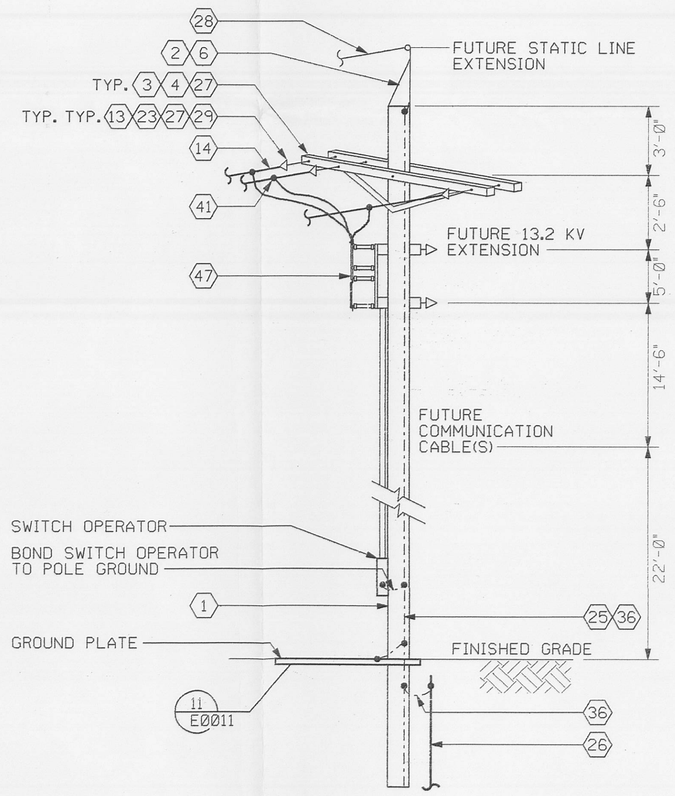

ELEVATION POLE 41 (E2, E0014) REF E0005
NTS

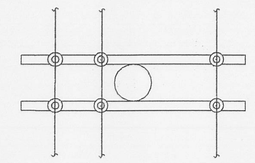

VIEW C
NTS

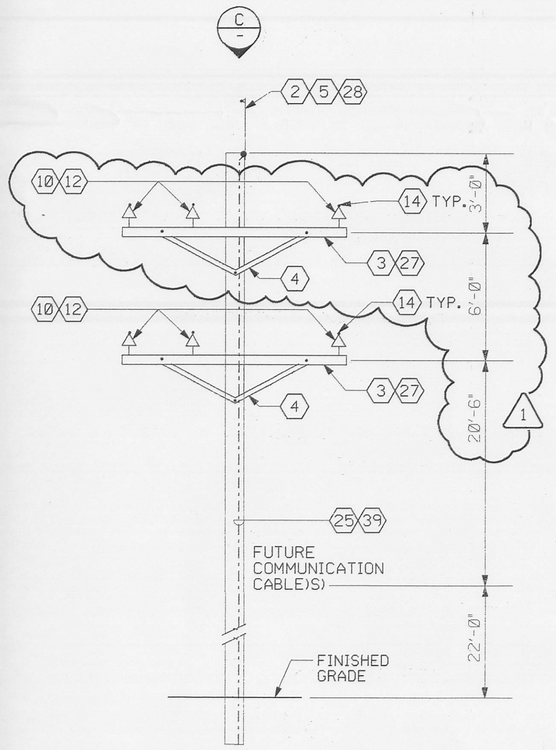

ELEVATION POLES OP68 & OP69 (E3, E0014) REF E0005
NTS

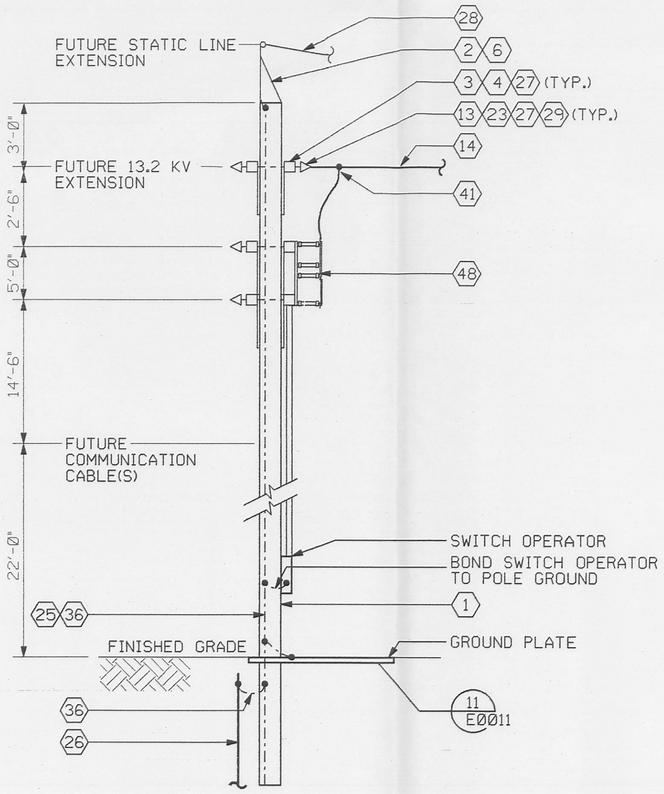

ELEVATION POLE 24B (E4, E0014) REF E0005
NTS

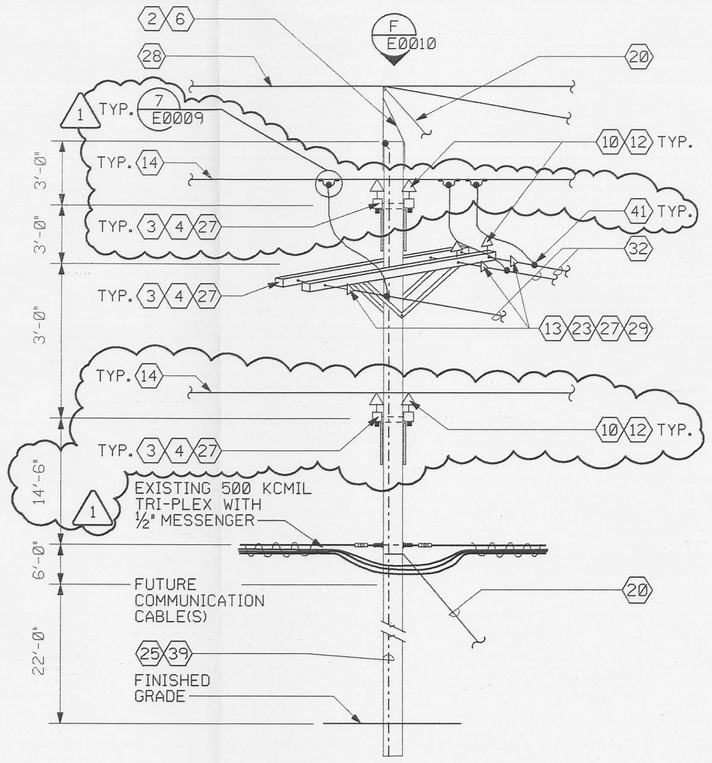

ELEVATION POLE 24A (E29, E0014) REF E0005
NTS

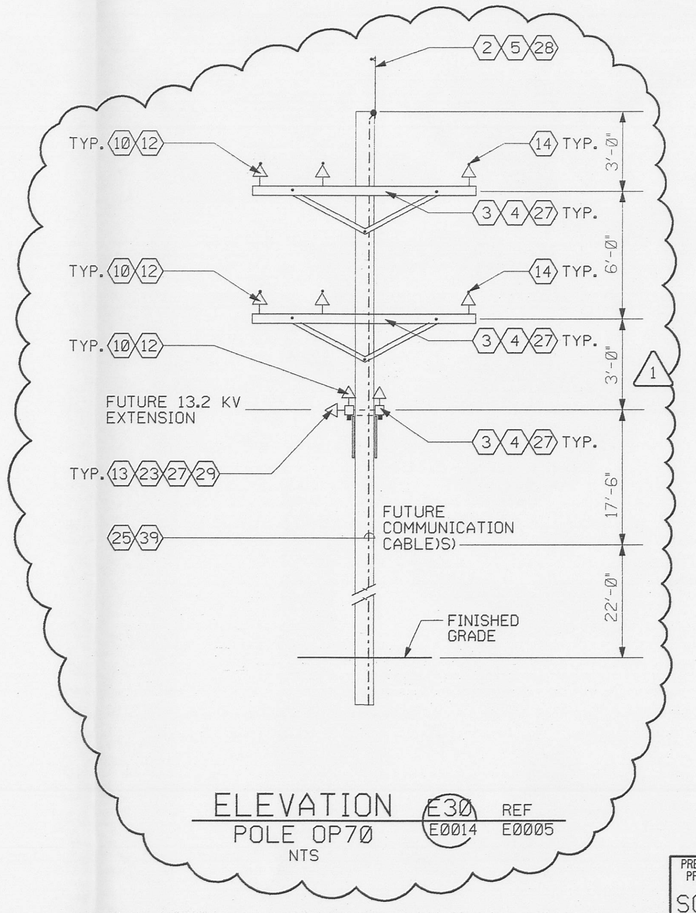

ELEVATION POLE OP70 (E30, E0014) REF E0005
NTS

NOTES

REF DWG NO.	DRAWING TITLE	SHEET NO.
92X-5900-X-00320	DRAWING INDEX	X0002
92X-5900-E-00405	SYMBOLS AND LEGEND	E0001
92X-5900-E-00379	OVERALL SITE POWER PLAN	E0005
92X-5900-E-00382	DETAILS - SHEET 1	E0009
92X-5900-E-00407	DETAILS - SHEET 2	E0010
92X-5900-E-00408	DETAILS - SHEET 3	E0011

000044

REV. NO.	ISSUE OR REVISION PURPOSE - DESCRIPTION	A-E	FERMCO	DATE
1	INCORPORATED FDF DCN #20401-015; ADDED EXTENSIONS TO MAIN FEEDERS, REVISED DEADEND TERMINATIONS TO STRAIGHT THRU, ADJUSTED DIMENSIONS, ADDED ELEVATION E30	CS	N/A	10/13/97
0	ELECTRICAL WORK ADDED TO CONTRACT, CERTIFIED FOR CONSTRUCTION	CS	N/A	06/24/97

INITIALS AND DATE

UNITED STATES DEPARTMENT OF ENERGY
FERNALD ENVIRONMENTAL MANAGEMENT PROJECT

THIS DRAWING PREPARED BY
PARSONS
THE RALPH M. PARSONS CO. - PARSONS MAIN, INC. - ENGINEERING-SCIENCE, INC.
CINCINNATI, OHIO

PROJECT NAME
WASTE UNITS REMEDIATION
SOUTHERN WASTE UNITS - SITE PREPARATION PACKAGE

DRAWING TITLE
ELECTRICAL DETAILS SHEET 6

DRAWN BY	DATE	LEAD ENGINEER	DATE	CHECKED BY	DATE
L. N. HAGAMAN	06/17/97	J. L. COOPER	06/24/97	J. L. COOPER	06/19/97

PLANT/BLDG. NO.	FLOOR	SCALE	CLASS
		NOT TO SCALE	

SUBMITTED FOR APPROVAL (A-E, DATE)	FERMCO CRU APPROVAL (DATE)	FERMCO PROJECT NO.
CARLTON SCHROEDER 06/24/97	N/A	20400

PREPARED UNDER PARSONS PROJECT ORDER NUMBER	DOE PROJECT NO.	FEMP PROJECT NO.	DRAWING INDEX CODE NO.	SHEET NO.	REV. NO.
SCEP/P0165		WBS 1.1.1.1.2.3.6 00-90701	92X-5900-E-00454	E0014	1

UNITED STATES DEPARTMENT OF ENERGY
FERNALD ENVIRONMENTAL MANAGEMENT PROJECT

WASTE UNITS REMEDIATION PROJECT

SOUTHERN WASTE UNITS - SITE PREPARATION PACKAGE

SUBCONTRACT NO. FSC607
FDF PROJECT NO. 20400

STATE OF OHIO NORTH (NAD 83)

FEMP NORTH ∠=1.5672°

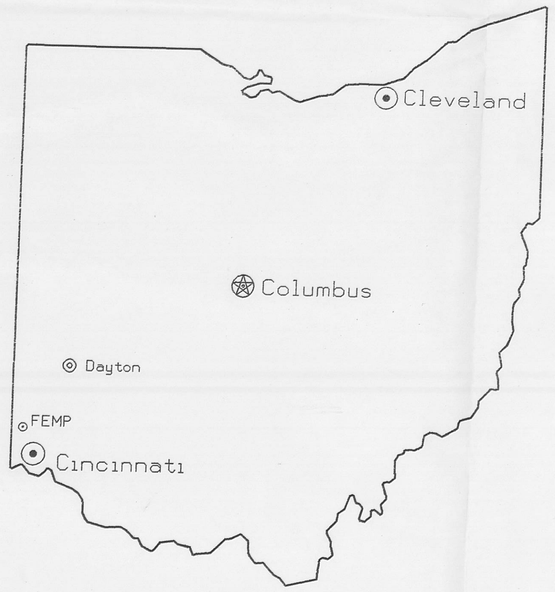

PARSONS

The Ralph M. Parsons Company * Parsons Main, Inc. * Engineering-Science, Inc.

ARCHITECTS - ENGINEERS
CINCINNATI, OHIO

600' 0' 600' 1200'
GRAPHIC SCALE: 1"=600'

STATE OF OHIO FRANKLIN M. PARTON, JR. NO. E-57614 REGISTERED PROFESSIONAL ENGINEER

NOTES

RELATED DWG NO.	DRAWING TITLE	SHEET NO.
92X-5900-X-00320	DRAWING INDEX	X0002
92X-5900-X-00321	LEGEND AND GENERAL NOTES	X0003

000001 1153 2-205.7

REV. NO.	ISSUE OR REVISION PURPOSE - DESCRIPTION	A-E	FERMCO	DATE
1	REVISED WOODCHIP STOCKPILE AREA AND BORROW AREA LOCATIONS PER DCN: 20401-001 AND 003	JMU	N/A	8/27/97
0	CERTIFIED FOR CONSTRUCTION	JMU	N/A	6/13/97

INITIALS AND DATE

UNITED STATES DEPARTMENT OF ENERGY
FERNALD ENVIRONMENTAL MANAGEMENT PROJECT

THIS DRAWING PREPARED BY
PARSONS
THE RALPH M. PARSONS CO. - PARSONS MAIN, INC. - ENGINEERING-SCIENCE, INC.
CINCINNATI, OHIO

PROJECT NAME
WASTE UNITS REMEDIATION
SOUTHERN WASTE UNITS - SITE PREPARATION PACKAGE

DRAWING TITLE
PROJECT TITLE SHEET

DRAWN BY	DATE	LEAD ENGINEER	DATE	CHECKED BY	DATE
R. ESPARZA	03/11/96	F.M. PARTON, JR.	6/12/97	K. GERARD	1/18/97

PLANT/BLDG. NO.	FLOOR	SCALE	CLASS
		1"=600'	

SUBMITTED FOR APPROVAL	FERMCO CRU APPROVAL	FERMCO PROJECT NO.
J.M. USHER 6/13/97	N/A	20400

A-E DOE PROJECT NO.	FEMP PROJECT NO.	DRAWING INDEX CODE NO.	SHEET NO.	REV. NO.
	WBS 1.1.1.1.2.3.6 00-90701	92X-5900-X-00319	X0001	1

PREPARED UNDER PARSONS PROJECT ORDER NUMBER
SCEP/P0165

INDEX OF DRAWINGS

INDEX CODE NO.	DRAWING NO.	SHEET NO.	REVISION NO.	DRAWING TITLE	REMARKS
	92X-5900-X-00319	X0001	1	PROJECT TITLE SHEET	
	92X-5900-X-00320	X0002	3 3	DRAWING INDEX	
	92X-5900-X-00321	X0003	1	LEGEND AND GENERAL NOTES	
	92X-5900-G-00350	G0001	1	CIVIL - TRAFFIC FLOW PLAN	
	92X-5900-G-00281	G0002	1	CIVIL - MASTER SITE/UTILITY PLAN	
	92X-5900-G-00348	G0003	1	CIVIL - EXISTING CONDITIONS PLAN	
	92X-5900-G-00400	G0004	1	CIVIL - SURVEY INFORMATION AND SOIL STRIPPING PLAN	
	92X-5900-G-00282	G0005	1	CIVIL - SITE PLAN	
	92X-5900-G-00284	G0006	1	CIVIL - SITE PLAN - SUPPORT AREA	
	92X-5900-G-00283	G0007	1	CIVIL - SITE PLAN - WHEEL WASH AREA	
	92X-5900-G-00390	G0008	1	CIVIL - SITE PLAN - PADDYS RUN AREA	
	92X-5900-G-00303	G0009	1	CIVIL - ENLARGEMENT RETENTION BASIN #1	
	92X-5900-G-00371	G0010	1	CIVIL - ENLARGEMENT RETENTION BASIN #2	
	92X-5900-G-00372	G0011	1	CIVIL - ENLARGEMENT RETENTION BASIN #3	
	92X-5900-G-00311	G0012	1	CIVIL - EROSION AND SEDIMENT CONTROL - SHEET 1 OF 2	
	92X-5900-G-00368	G0013	1	CIVIL - EROSION AND SEDIMENT CONTROL - SHEET 2 OF 2	
	92X-5900-G-00304	G0014	1	CIVIL - TRANSFER LINE - PLAN AND PROFILE - SHEET 1 OF 3	
	92X-5900-G-00305	G0015	1	CIVIL - TRANSFER LINE - PLAN AND PROFILE - SHEET 2 OF 3	
	92X-5900-G-00306	G0016	1	CIVIL - TRANSFER LINE - PLAN AND PROFILE - SHEET 3 OF 3	
	92X-5900-G-00312	G0017	1	CIVIL - WHEEL WASH PAD - STRUCTURAL DETAILS	
	92X-5900-G-00310	G0018	1	CIVIL - WHEEL WASH SUMP DISCHARGE - PROFILE AND DETAILS	
	92X-5900-G-00307	G0019	1	CIVIL - WATER LINE DETAILS	
	92X-5900-G-00309	G0020	0	CIVIL - MISCELLANEOUS DETAILS - SHEET 1 OF 3	
	92x-5900-G-00308	G0021	0	CIVIL - MISCELLANEOUS DETAILS - SHEET 2 OF 3	
	92X-5900-G-00411	G0022	1	CIVIL - MATERIAL DOCUMENTATION PLAN	
	92X-5900-G-00452	G0023	0	CIVIL - MISCELLANEOUS DETAILS - SHEET 3 OF 3	
	92X-5900-G-00453	G0024	1	CIVIL - SITE PLAN - BORROW AREA VOID DRAWING	VOID DRAWING PER DCN: 20401-001
	92X-5900-N-00295	N0001	0	MECHANICAL PROCESS - PIPING AND INSTRUMENTATION DIAGRAM - SYMBOLS AND LEGEND	
	92X-5900-N-00290	N0002	0	MECHANICAL PROCESS - PIPING AND INSTRUMENTATION DIAGRAM - WASTEWATER COLLECTION AND TRANSFER	
	92X-5900-N-00291	N0003	1	MECHANICAL PROCESS - PIPING AND INSTRUMENTATION DIAGRAM - DRINKING WATER SYSTEM	
	92X-5900-E-00405	E0001	0	ELECTRICAL - SYMBOLS AND LEGEND	
	92X-5900-E-00404	E0002	2	ELECTRICAL - SINGLE LINE DIAGRAM - WEST SIDE 13.2 KV FEEDERS	
	92X-5900-E-00377	E0003	2	ELECTRICAL - SINGLE LINE DIAGRAMS / ELEVATIONS - LIFT STATION NO. 1, 2, AND 3	
	92X-5900-E-00378	E0004	1	ELECTRICAL - SINGLE LINE DIAGRAMS / ELEVATIONS - WHEEL WASH FACILITY AND SUPPORT AREA	
	92X-5900-E-00379	E0005	2	ELECTRICAL - OVERALL SITE POWER PLAN	
	92X-5900-E-00381	E0006	0	ELECTRICAL - PANEL SCHEDULES	
	92X-5900-E-00380	E0007	1	ELECTRICAL - ELEMENTARY DIAGRAMS	
	92X-5900-E-00406	E0008	2	ELECTRICAL - CABLE AND CONDUIT SCHEDULES	
	92X-5900-E-00382	E0009	1 3	ELECTRICAL - DETAILS - SHEET 1	
	92X-5900-E-00407	E0010	2	ELECTRICAL - DETAILS - SHEET 2	
	92X-5900-E-00408	E0011	2	ELECTRICAL - DETAILS - SHEET 3	
	92X-5900-E-00409	E0012	2	ELECTRICAL - DETAILS - SHEET 4	
	92X-5900-E-00376	E0013	2	ELECTRICAL - DETAILS - SHEET 5	
	92X-5900-E-00454	E0014	1	ELECTRICAL - DETAILS - SHEET 6	

NOTES

RELATED DWG NO.	DRAWING TITLE	SHEET NO.
92X-5900-X-00319	PROJECT TITLE SHEET	X0001
92X-5900-X-00321	LEGEND AND GENERAL NOTES	X0003

000002

REV. NO.	ISSUE OR REVISION PURPOSE - DESCRIPTION	A-E	FERMCO	DATE
3	INCORPORATED FDF DCN #20401-011 & 20401-015	CS	N/A	10/9/97
2	DRAWING REVISED PER DCN: 20401-001, 003, 005, 006 AND 007	JMU	N/A	08/27/97
1	ELECTRICAL WORK ADDED TO CONTRACT	CS	N/A	06/24/97
0	CERTIFIED FOR CONSTRUCTION	JMU	N/A	06/13/97

INITIALS AND DATE

UNITED STATES DEPARTMENT OF ENERGY
FERNALD ENVIRONMENTAL MANAGEMENT PROJECT

THIS DRAWING PREPARED BY
PARSONS
THE RALPH M. PARSONS CO. - PARSONS MAIN, INC. - ENGINEERING-SCIENCE, INC.
CINCINNATI, OHIO

PROJECT NAME
WASTE UNITS REMEDIATION
SOUTHERN WASTE UNITS - SITE PREPARATION PACKAGE

DRAWING TITLE
DRAWING INDEX

DRAWN BY	DATE	LEAD ENGINEER	DATE	CHECKED BY	DATE
R. ESPARZA	03/11/96	FRANK PARTON JR.	06/12/97	K. GERARD	01/18/97

PLANT/BLDG. NO.	FLOOR	SCALE	CLASS
		NONE	

SUBMITTED FOR APPROVAL	FERMCO CRU APPROVAL	FERMCO PROJECT NO.
J.M. USHER 06/13/97	N/A	20400
A-E DATE	DATE	

PREPARED UNDER PARSONS PROJECT ORDER NUMBER	DOE PROJECT NO.	FEMP PROJECT NO.	DRAWING INDEX CODE NO.	SHEET NO.	REV. NO.
SCEP/P0165		WBS 1.1.1.1.2.3.6 00-90701	92X-5900-X-00320	X0002	3

GENERAL LEGEND

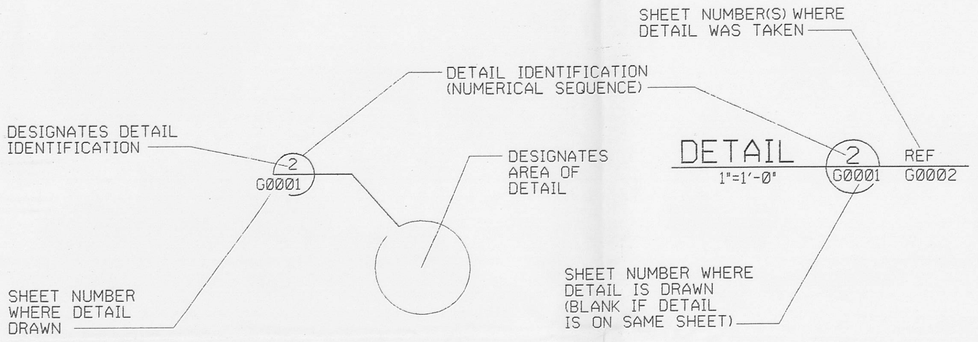

UTILITY SYMBOLS

EXISTING		PROPOSED
----- ST -----	STORM SEWER	ST
-----FG -----	FUEL GAS	
-----DW -----	DRINKING WATER	DW
----- FT -----	FILTRATE OR EFFLUENT	
----- OE -----	OVERHEAD ELECTRICAL	OE
----- G -----	ELECTRIC GROUND	G
----- GW -----	GROUND WATER	
----- WW -----	WASTE WATER	WW
	TRANSFER LINE	TRANSFER LINE
	DISCHARGE LINE AND TREATMENT LINE	GW

SYMBOLS LEGEND

EXISTING		PROPOSED
	POST INDICATOR VALVE (PIV)	
	FIRE HYDRANT (FH)	
	MANHOLE (MH)	S OR D
OR	CATCH BASIN (CB)	
	POLE	
	ELECTRICAL MANHOLE	E
	GATE VALVE	
1313	MONITORING WELL	
E	EXTRACTION WELL	
	GRAVEL SURFACE	
	ASPHALTIC CONCRETE PAVING	
	CONCRETE PAD	
	BUILDING/TRAILER	
	CHAIN LINK FENCE	
	TREE LINE	
	DECIDUOUS TREE	
	CONIFEROUS TREE	
	CENTERLINE DRAINAGE DITCH	
	RIVER/CREEK	
	TO BE REMOVED	
	SILT FENCE	S S
	SILTATION BERM	SB SB
	ELECTRICAL TRANSFORMER	T
	TRANSMISSION TOWER	
	HEADWALL	
	BENCH MARK	
xx xx	CONSTRUCTION/WIND BARRIER FENCE	xx xx
	SIGN	
	BOLLARD/GUARD POST	
PB	ELECTRICAL PULL BOX	
	ROAD CENTERLINE OR BASELINE	
	PIPE BEND	OR
	PIPE TEE	
	REDUCER	
	FENCE GATE	
	APPROXIMATE ELEVATION OF GROUNDWATER	
	LIMIT OF WORK	
	WOODCHIP STOCKPILE AREA	
	GEOMEMBRANE LINER	
	GEOMEMBRANE LINER/ INFILTRATION BARRIER	
	APPROXIMATE LIMIT OF ABOVE WAC EXCAVATION AREA	
	APPROXIMATE LIMIT OF LEAD CONTAMINATED SOIL AREA	
	ROPE FENCING	
	FLOW LINE	

GENERAL NOTES

1. EXISTING TOPOGRAPHY PREPARED BY PARSONS FROM DIGITAL MAPPING BY PHOTOGRAMMETRIC METHODS FROM AERIAL PHOTOGRAPHY PROVIDED BY WOOLPERT CONSULTANTS FLOWN ON APRIL 9, 1992. OTHER SOURCES OF EXISTING INFORMATION SHOWN ON DRAWINGS WERE PROVIDED BY FDF; THESE SOURCES INCLUDE:

   EXISTING SITE DATA SOURCE (IN PLANT FILES)
   FEMP CADD GRID/UTILITY DRAWINGS
   FEMP CONTRACTOR PROJECT DESIGN DOCUMENTS
   FEMP OU-2 REMEDIAL INVESTIGATION REPORT, AND FEASIBILITY STUDY REPORT, 1995
   IT SURVEY, 1994

2. HORIZONTAL CONTROL SHOWN ON THE DRAWINGS IS BASED UPON NORTH AMERICAN DATUM 1983 (NAD 83). SEE SHEET G0004 FOR PROJECT SURVEY CONTROL.

3. VERTICAL CONTROL SHOWN ON THE DRAWINGS IS BASED UPON NATIONAL GEODETIC VERTICAL DATUM 1929 (NGVD 29). SEE SHEET G0004 FOR PROJECT SURVEY CONTROL.

4. GEOLOGICAL AND CROSS SECTION INFORMATION TAKEN FROM FEMP REMEDIAL INVESTIGATION REPORT (RI), 1995, FEASIBILITY REPORT (FS), 1995, SITE GEOTECHNICAL REPORT, AND FEMP 3-D CADD MODEL. THE RI AND FS ARE AVAILABLE TO THE SUBCONTRACTOR FOR REVIEW UPON REQUEST. ACTUAL LOCATIONS AND DEPTHS MAY BE DIFFERENT AND SHALL BE DETERMINED IN THE FIELD DURING CONSTRUCTION.

5. LOCATION AND DEPTH OF EXISTING UTILITIES ARE APPROXIMATE. FDF IS TO LOCATE UTILITIES PRIOR TO EXCAVATION FOR CONSTRUCTION. SUBCONTRACTOR IS TO VERIFY UTILITY LOCATIONS. IF LOCATION AND DEPTH ARE DIFFERENT OR IF UNKNOWN UNCHARTED UTILITIES ARE DISCOVERED, SUBCONTRACTOR IS TO INFORM FDF BEFORE PROCEEDING.

6. FIGURED DIMENSIONS TAKE PRECEDENCE OVER SCALED DIMENSIONS. CHECK GRAPHIC SCALE BEFORE SCALING.

7. DIMENSIONS AND/OR ELEVATIONS MARKED THUS (+/-) SHALL BE VERIFIED IN THE FIELD BY SUBCONTRACTOR.

8. RESTRICT ALL ACTIVITIES TO THE IMMEDIATE PROJECT AREA AND WITHIN THE 'LIMIT OF WORK'. ALL AREAS DISTURBED OUTSIDE THE LIMIT OF WORK SHALL BE REPAIRED BY THE SUBCONTRACTOR AT NO COST TO FDF.

9. MAINTAIN AND PROTECT UTILITY MARKINGS.

10. NOTES ON DRAWINGS SHALL BE UNDERSTOOD TO REFER TO REQUIREMENTS OF SITE PREPARATION SUBCONTRACTOR UNLESS NOTED OTHERWISE. EXAMPLE: "MAINTAIN AND PROTECT UTILITY MARKINGS" IS UNDERSTOOD TO MEAN "SITE PREPARATION SUBCONTRACTOR SHALL MAINTAIN AND PROTECT UTILITY MARKINGS".

11. REFERENCES TO SUBCONTRACTOR SHALL INDICATE THE SITE PREPARATION SUBCONTRACTOR.

GRADING SYMBOLS

EXISTING		PROPOSED
X 584.9	SPOT ELEVATION	X 589.4
584	CONTOUR - MINOR	584
585	CONTOUR - MAJOR	585
(TOE)	SLOPE INDICATOR	(TOE)

ABBREVIATIONS

AFP	ACTIVE FLYASH PILE
BSL	BIODENITRIFICATION SURGE LAGOON
BF	BACKFLOW PREVENTER
EXIST	EXISTING
FDF	FLUOR DANIEL FERNALD
FEMP	FERNALD ENVIRONMENTAL MANAGEMENT PROJECT
FRL	FINAL REMEDIATION LEVEL
FS	FEASIBILITY STUDY
GMA	GREAT MIAMI AQUIFER
IFP	INACTIVE FLYASH PILE
OSDF	ON-SITE DISPOSAL FACILITY
OU-2	OPERABLE UNIT 2
RAD II	RADIOLOGICAL WORKER II
RI	REMEDIAL INVESTIGATION
SHT	SHEET
SF	SOUTH FIELD
SWM	STORMWATER MANAGEMENT
SWUS	SOUTHERN WASTE UNITS (CONSISTING OF AFP, IFP, AND SF)
TYP	TYPICAL
WAC	WASTE ACCEPTANCE CRITERIA

RELATED DWG NO.	DRAWING TITLE	SHEET NO.
92X-5900-X-00319	PROJECT TITLE SHEET	X0001
92X-5900-X-00320	DRAWING INDEX	X0002
92X-5900-G-00400	SURVEY INFORMATION AND SOIL STRIPPING PLAN	G0004

000003

REV. NO.	ISSUE OR REVISION PURPOSE - DESCRIPTION	A-E	FERMCO	DATE
1	REVISED PER DCN: 20401-005	JMU	N/A	8/27/97
0	CERTIFIED FOR CONSTRUCTION	JMU	N/A	6/13/97

INITIALS AND DATE

UNITED STATES DEPARTMENT OF ENERGY
FERNALD ENVIRONMENTAL MANAGEMENT PROJECT

THIS DRAWING PREPARED BY
PARSONS
THE RALPH M. PARSONS CO. - PARSONS MAIN, INC. - ENGINEERING-SCIENCE, INC.
CINCINNATI, OHIO

PROJECT NAME
WASTE UNITS REMEDIATION
SOUTHERN WASTE UNITS - SITE PREPARATION PACKAGE

DRAWING TITLE
LEGEND AND GENERAL NOTES

DRAWN BY	DATE	LEAD ENGINEER	DATE	CHECKED BY	DATE
B. PARTON	03/11/96	F.M. PARTON, JR.	6/13/97	K. GERARD	1/18/97

PLANT/BLDG. NO.	FLOOR	SCALE	CLASS
		NONE	

SUBMITTED FOR APPROVAL	FERMCO CRU APPROVAL	FERMCO PROJECT NO.
A-E J.M. USHER DATE 6/13/97	DATE N/A	20400

DOE PROJECT NO.	FEMP PROJECT NO.	DRAWING INDEX CODE NO.	SHEET NO.	REV. NO.
	WBS 1.1.1.1.2.3.6 00-90701	92X-5900-X-00321	X0003	1

PREPARED UNDER PARSONS PROJECT ORDER NUMBER: SCEP/P0165

STATE OF OHIO — FRANKLIN M. PARTON, JR. NO. E-57614 — REGISTERED PROFESSIONAL ENGINEER — 6/12/97

NOTES

1. THE RE-ROUTED NORTH ENTRANCE ROAD WILL BE UNDER CONSTRUCTION IN THE SUMMER OF 1997, AND MAY BE COMPLETED DURING/WHILE THE SUBCONTRACTOR IS PERFORMING SITE PREPARATION WORK. DURING CONSTRUCTION, THERE MAY BE TIMES WHEN THERE IS NO OPEN NORTH ENTRANCE ROAD AT THE FEMP. THE SITE PREP SUBCONTRACTOR SHALL USE THE OPERATIONAL ROAD FOR ACCESS.
2. THE IMPACTED MATERIAL HAUL ROAD MAY BE COMPLETED OR UNDER CONSTRUCTION DURING THE SITE PREP SUBCONTACTORS WORK. THE SITE PREP SUBCONTRACTOR SHALL COORDINATE HIS WORK IN THE AREA THROUGH FDF.

- SITE ACCESS/SUPPORT AREA ACCESS
- IMPACTED MATERIAL HAUL ROAD
- LIMIT OF WORK
- WOODCHIP STOCKPILE

RELATED DWG NO.	DRAWING TITLE	SHEET NO.
92X-5900-X-00320	DRAWING INDEX	X0002
92X-5900-X-00321	LEGEND AND GENERAL NOTES	X0003

00004

REV. NO.	ISSUE OR REVISION PURPOSE - DESCRIPTION	A-E	FERMCO	DATE
1	BORROW AREA AND WOODCHIP STOCKPILE AREA CHANGES PER DCN: 20401-001 AND 003	JMU	N/A	8/27/97
0	CERTIFIED FOR CONSTRUCTION	JMU	N/A	6/13/97

INITIALS AND DATE

UNITED STATES DEPARTMENT OF ENERGY
FERNALD ENVIRONMENTAL MANAGEMENT PROJECT

THIS DRAWING PREPARED BY
PARSONS
THE RALPH M. PARSONS CO. - PARSONS MAIN, INC. - ENGINEERING-SCIENCE, INC.
CINCINNATI, OHIO

PROJECT NAME
WASTE UNITS REMEDIATION
SOUTHERN WASTE UNITS - SITE PREPARATION PACKAGE

DRAWING TITLE
CIVIL
TRAFFIC FLOW PLAN

STATE OF OHIO — FRANKLIN M. PARTON, JR. NO. E-57814 — REGISTERED PROFESSIONAL ENGINEER — 8/27/97

DRAWN BY	DATE	LEAD ENGINEER	DATE	CHECKED BY	DATE
D. REED	10/10/96	F.M. PARTON, JR.	6/12/97	K. GERARD	1/18/97

PLANT/BLDG. NO.	FLOOR	SCALE	CLASS
		1"=300'	

SUBMITTED FOR APPROVAL	FERMCO CRU APPROVAL	FERMCO PROJECT NO.
J.M. USHER 6/13/97	N/A	20400
A-E DATE	DATE	

DOE PROJECT NO.	FEMP PROJECT NO.	DRAWING INDEX CODE NO.	SHEET NO.	REV. NO.
	WBS 1.1.1.1.2.3.6 00-90701	92X-5900-G-00350	G0001	1

PREPARED UNDER PARSONS PROJECT ORDER NUMBER: SCEP/P0165

NOTES

1. RECTANGULAR SHAPES INDICATE LIMITS OF SHEETS TO REFERENCE.

RELATED DWG NO.	DRAWING TITLE	SHEET NO.
92X-5900-X-00320	DRAWING INDEX	X0002
92X-5900-X-00321	LEGEND AND GENERAL NOTES	X0003
92X-5900-G-00282	SITE PLAN	G0005
92X-5900-G-00284	SITE PLAN - SUPPORT AREA	G0006
92X-5900-G-00283	SITE PLAN - WHEEL WASH AREA	G0007
92X-5900-G-00390	SITE PLAN - PADDYS RUN AREA	G0008
92X-5900-G-00303	ENLARGEMENT RETENTION BASIN #1	G0009
92X-5900-G-00371	ENLARGEMENT RETENTION BASIN #2	G0010
92X-5900-G-00372	ENLARGEMENT RETENTION BASIN #3	G0011
92X-5900-G-00304	TRANSFER LINE - PLAN AND PROFILE - SHEET 1 OF 3	G0014
92X-5900-G-00305	TRANSFER LINE - PLAN AND PROFILE - SHEET 2 OF 3	G0015
92X-5900-G-00306	TRANSFER LINE - PLAN AND PROFILE - SHEET 3 OF 3	G0016

000005

REV. NO.	ISSUE OR REVISION PURPOSE - DESCRIPTION	A-E	FERMCO	DATE
1	ADDED 4 ABOVE WAC AREAS PER DCN: 20401-008 REVISED WOODCHIP STOCKPILE LOCATION, ADDED SHT G0008 REFERENCE, DELETED REFERENCES TO BORROW AREA, PER DCN: 20401-001 AND 003	JMU	N/A	8/27/97
0	CERTIFIED FOR CONSTRUCTION	JMU	N/A	6/13/97

INITIALS AND DATE

UNITED STATES DEPARTMENT OF ENERGY
FERNALD ENVIRONMENTAL MANAGEMENT PROJECT

THIS DRAWING PREPARED BY
PARSONS
THE RALPH M. PARSONS CO. - PARSONS MAIN, INC. - ENGINEERING-SCIENCE, INC.
CINCINNATI, OHIO

PROJECT NAME
WASTE UNITS REMEDIATION
SOUTHERN WASTE UNITS - SITE PREPARATION PACKAGE

DRAWING TITLE
CIVIL
MASTER SITE/UTILITY PLAN

STATE OF OHIO FRANKLIN M. PARTON, JR. NO. E-57614 REGISTERED PROFESSIONAL ENGINEER

DRAWN BY	DATE	LEAD ENGINEER	DATE	CHECKED BY	DATE
D. REED	02/28/96	F.M. PARTON, JR.	6/12/97	K. GERARD	1/18/97

PLANT/BLDG. NO.	FLOOR	SCALE	CLASS
		1"=100'	

SUBMITTED FOR APPROVAL	FERMCO CRU APPROVAL	FERMCO PROJECT NO.
J.M. USHER 6/13/97	N/A	20400

A-E DOE PROJECT NO.	FEMP PROJECT NO.	DRAWING INDEX CODE NO.	SHEET NO.	REV. NO.
	WBS 1.1.1.1.2.3.6 00-90701	92X-5900-G-00281	G0002	1

PREPARED UNDER PARSONS PROJECT ORDER NUMBER
SCEP/P0165

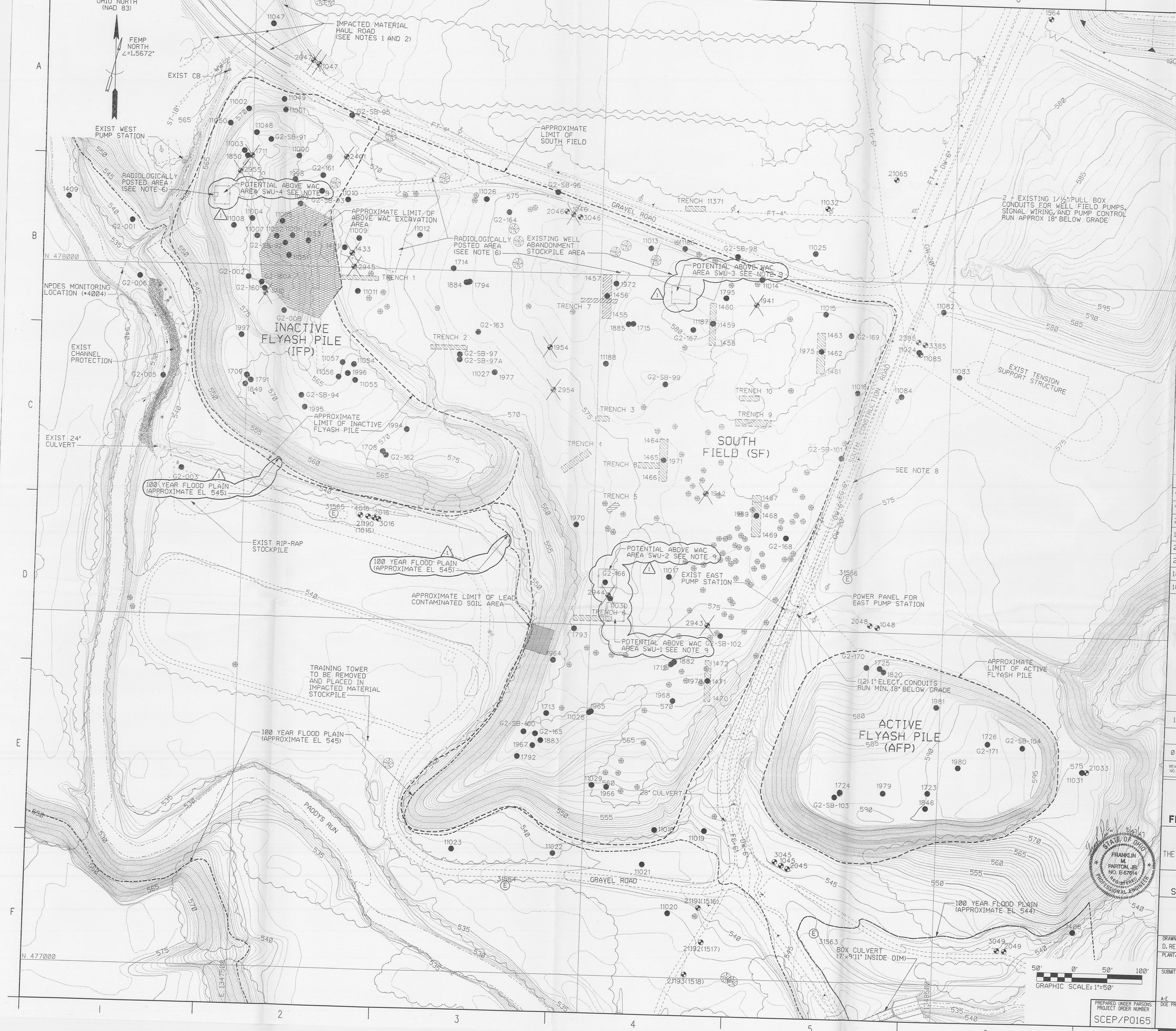

NOTES

1. IMPACTED MATERIAL HAUL ROAD WILL BE CONSTRUCTED IN THE SUMMER OF 1997 AND MAY NOT BE COMPLETED WHEN SOUTHERN WASTE UNITS SITE PREPARATION CONSTRUCTION BEGINS.
2. THE TOPOGRAPHIC AND PLANIMETRIC FEATURES SHOWN IN THE WHEEL WASH AREA AS EXISTING ARE FROM DESIGN DRAWINGS AND NOT "AS-BUILT". THE SUBCONTRACTOR SHALL INSPECT THE WORK AREA PRIOR TO STARTING WORK AND NOTIFY FDF OF ANY DISCREPANCIES IN WRITING.
3. SEE FLYASH PILES AND SOUTH FIELD WASTE UNITS GEOTECHNICAL REPORT DATED APRIL, 1996 REVISION 0 FOR SOIL BORING LOCATIONS AND INFORMATION.
4. THE LIMITS OF THE INACTIVE FLYASH PILE (IFP), SOUTH FIELD (SF), AND ACTIVE FLYASH PILE (AFP) SHOWN ON THIS DRAWING ARE SHOWN FOR GENERAL INFORMATION ONLY.
5. FDF WILL COORDINATE ABANDONMENT OF DESIGNATED MONITORING WELLS BY OTHERS. PROTECT ALL EXISTING MONITORING WELLS AND EXTRACTION WELLS THAT ARE TO REMAIN. SEE SPECIFICATION 02100.
6. NOTIFY FDF 24 HOURS PRIOR TO PERFORMING WORK WITHIN EXISTING RADIOLOGICALLY POSTED AREAS. ALL WORK WITHIN THESE AREAS SHALL BE PERFORMED BY RAD II PERSONNEL WITH APPROPRIATE PPE REQUIREMENTS.
7. SUBCONTRACTOR TO USE CAUTION WHEN CROSSING EXISTING UTILITIES THAT RUN NORTH/SOUTH ALONG EXISTING ROAD.
8. DW-6", HDPE, 3.5' DEPTH
   REF DRAWING 22A-5500-G-00807 AND 18A-4445-G-01086

   FG-6", HDPE, 2' DEPTH
   REF DRAWING 22X-5500-P-00868 AND 22X-5500-P-00872

   GW-20", HDPE FORCE MAIN, 4' DEPTH
   REF DRAWING 18A-4445-G-01095 AND 18A-4445-G-01086
9. POTENTIAL ABOVE WAC SOIL AREA. SOIL NOT TO BE DISTURBED DURING CLEARING OPERATIONS.

LEGEND

G2-169	SOIL BORING
1970	MONITORING WELL TO REMAIN
1970	MONITORING WELL TO BE ABANDONED BY OTHERS
1463 1462 1461	INVESTIGATION TRENCH (BACKFILLED)
(E)	EXTRACTION WELL TO REMAIN

RELATED DWG NO.	DRAWING TITLE	SHEET NO.
92X-5900-X-00320	DRAWING INDEX	X0002
92X-5900-X-00321	LEGEND AND GENERAL NOTES	X0003
22A-5500-G-00807	AS-BUILT PLAN	N/A
18A-4445-G-01086	DESIGN PLAN/PROFILE	N/A
22X-5500-P-00868	AS-BUILT PLAN	N/A
22X-5500-P-00872	AS-BUILT PIPE BEDDING DESIGN	N/A
18A-4445-G-01095	DESIGN PIPE BEDDING	N/A
18A-4445-G-01086	DESIGN PLAN/PROFILE	N/A

000006

REV. NO.	ISSUE OR REVISION PURPOSE - DESCRIPTION	A-E	FERMCO	DATE
1	ADDED 4 ABOVE WAC AREAS AND NOTE 9 PER DCN: 20401-008 FLOOD PLAIN LABEL PER DCN: 20401-005	JMU	N/A	8/27/97
0	CERTIFIED FOR CONSTRUCTION	JMU	N/A	6/13/97

INITIALS AND DATE

UNITED STATES DEPARTMENT OF ENERGY
FERNALD ENVIRONMENTAL MANAGEMENT PROJECT

THIS DRAWING PREPARED BY
PARSONS
THE RALPH M. PARSONS CO. - PARSONS MAIN, INC. - ENGINEERING-SCIENCE, INC.
CINCINNATI, OHIO

PROJECT NAME
WASTE UNITS REMEDIATION
SOUTHERN WASTE UNITS - SITE PREPARATION PACKAGE

DRAWING TITLE
CIVIL
EXISTING CONDITIONS PLAN

DRAWN BY	DATE	LEAD ENGINEER	DATE	CHECKED BY	DATE
D. REED	10/10/96	F.M. PARTON, JR.	6/12/97	K. GERARD	1/18/97

PLANT/BLDG. NO.	FLOOR	SCALE	CLASS
		1"=50'	

SUBMITTED FOR APPROVAL	FERMCO CRU APPROVAL	FERMCO PROJECT NO.
J.M. USHER 6/13/97	N/A	20400

A-E DATE	DOE PROJECT NO.	FEMP PROJECT NO.	DRAWING INDEX CODE NO.	SHEET NO.	REV. NO.
		WBS 1.1.1.1.2.3.6 00-90701	92X-5900-G-00348	G0003	1

PREPARED UNDER PARSONS PROJECT ORDER NUMBER SCEP/P0165

STATE OF OHIO FRANKLIN M. PARTON, JR. NO. E-57614 REGISTERED PROFESSIONAL ENGINEER

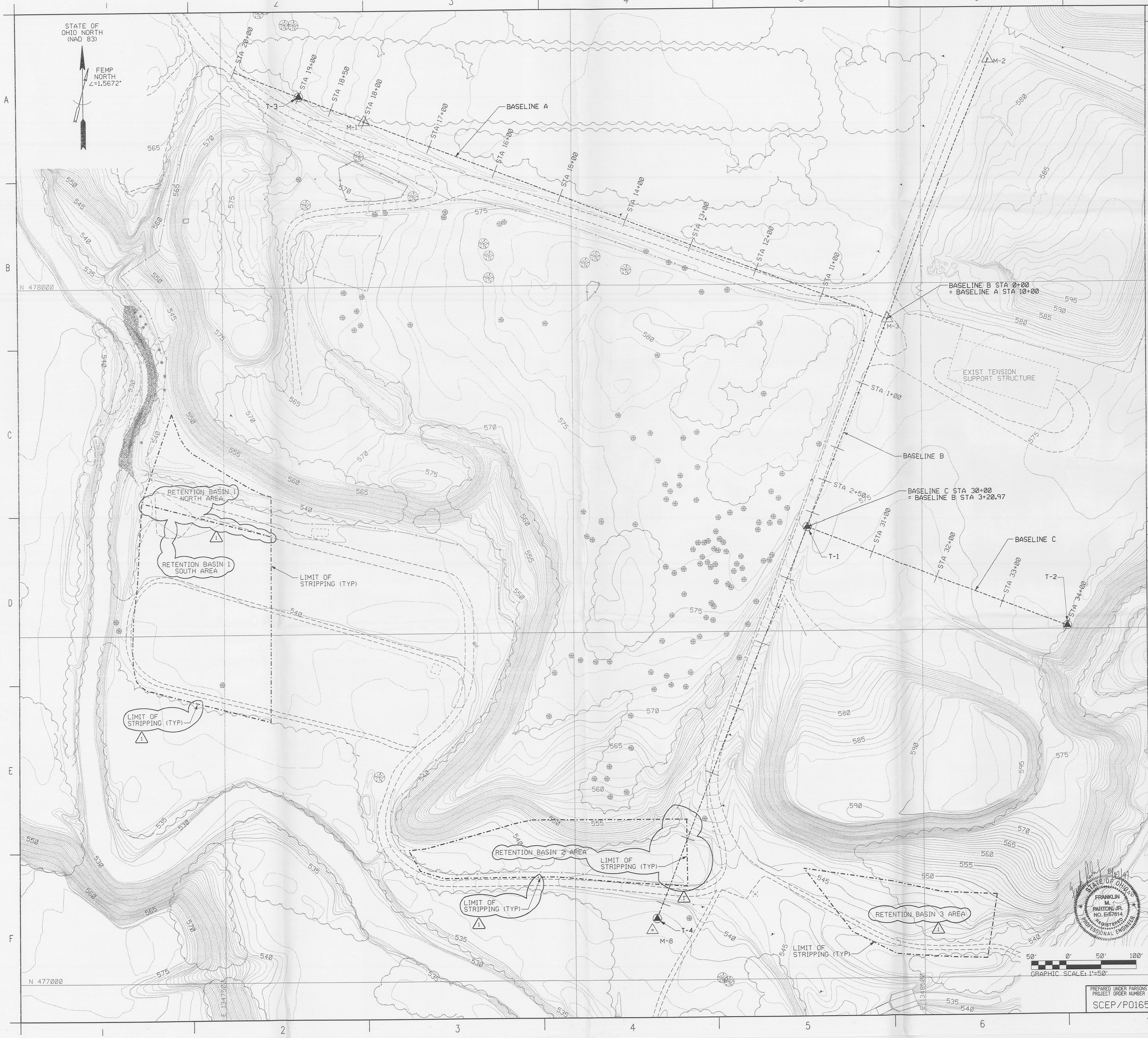

NOTES

1. EXISTING BENCHMARK INFORMATION PROVIDED BY FDF.
2. ANY BENCHMARKS DAMAGED DURING CONSTRUCTION SHALL BE REPLACED BY FDF AT THE SUBCONTRACTOR'S EXPENSE.
3. STRIP THE RETENTION BASIN AREAS TO THE FOLLOWING DEPTHS:
   RETENTION BASIN 1 NORTH AREA - 18"
   RETENTION BASIN 1 SOUTH AREA - 12"
   RETENTION BASIN 2 - 42"
   RETENTION BASIN 3 - 12"
   PLACE MATERIAL IN IMPACTED MATERIAL STOCKPILE AS SHOWN ON SHEET G0005.

BENCHMARK INFORMATION				
BENCHMARK	NORTHING	EASTING	ELEVATION	REMARKS
M-1	478238.04	1347705.25	573.848	A
M-2	478321.86	1348595.65	576.678	A
M-3	477948.93	1348451.10	577.413	A
M-8	477071.65	1348110.41	537.47	A
T-1	477649.66	1348335.09	TBS	TBS
T-2	477505.09	1348708.05	TBS	TBS
T-3	478274.21	1347611.94	TBS	TBS
T-4	477088.48	1348117.58	TBS	TBS

A — CONCRETE MONUMENT WITH X IN 3-1/2" ALUMINUM PLATE

TBS — TO BE SET WITH IRON PIN AND PLASTIC SURVEYORS CAP A MINIMUM OF 48" DEEP.

RELATED DWG NO.	DRAWING TITLE	SHEET NO.
92X-5900-X-00320	DRAWING INDEX	X0002
92X-5900-X-00321	LEGEND AND GENERAL NOTES	X0003
92X-5900-G-00282	SITE PLAN	G0005

000007

REV. NO.	ISSUE OR REVISION PURPOSE - DESCRIPTION	A-E	FERMCO	DATE
1	REVISED LIMITS OF STRIPPING AND NOTE 3 PER DCN: 20401-008	JMU	N/A	8/27/97
	REVISED LIMIT OF STRIPPING PER DCN: 20401-005			
0	CERTIFIED FOR CONSTRUCTION	JMU	N/A	6/13/97

INITIALS AND DATE

UNITED STATES DEPARTMENT OF ENERGY
FERNALD ENVIRONMENTAL MANAGEMENT PROJECT

THIS DRAWING PREPARED BY
PARSONS
THE RALPH M. PARSONS CO. - PARSONS MAIN, INC. - ENGINEERING-SCIENCE, INC.
CINCINNATI, OHIO

PROJECT NAME
WASTE UNITS REMEDIATION
SOUTHERN WASTE UNITS - SITE PREPARATION PACKAGE

DRAWING TITLE
CIVIL
SURVEY INFORMATION AND SOIL STRIPPING PLAN

DRAWN BY	DATE	LEAD ENGINEER	DATE	CHECKED BY	DATE
D. REED	12/17/96	F.M. PARTON, JR.	6/12/97	K. GERARD	1/18/97

PLANT/BLDG. NO.	FLOOR	SCALE	CLASS
		1"=50'	

SUBMITTED FOR APPROVAL	FERMCO CRU APPROVAL	FERMCO PROJECT NO.
J.M. USHER 6/13/97	N/A	20400

A-E DATE — DATE

DOE PROJECT NO.	FEMP PROJECT NO.	DRAWING INDEX CODE NO.	SHEET NO.	REV. NO.
	WBS 1.1.1.1.2.3.6 00-90701	92X-5900-G-00400	G0004	1

PREPARED UNDER PARSONS PROJECT ORDER NUMBER
SCEP/P0165

STATE OF OHIO — FRANKLIN M. PARTON, JR. — NO. E-57614 — REGISTERED PROFESSIONAL ENGINEER

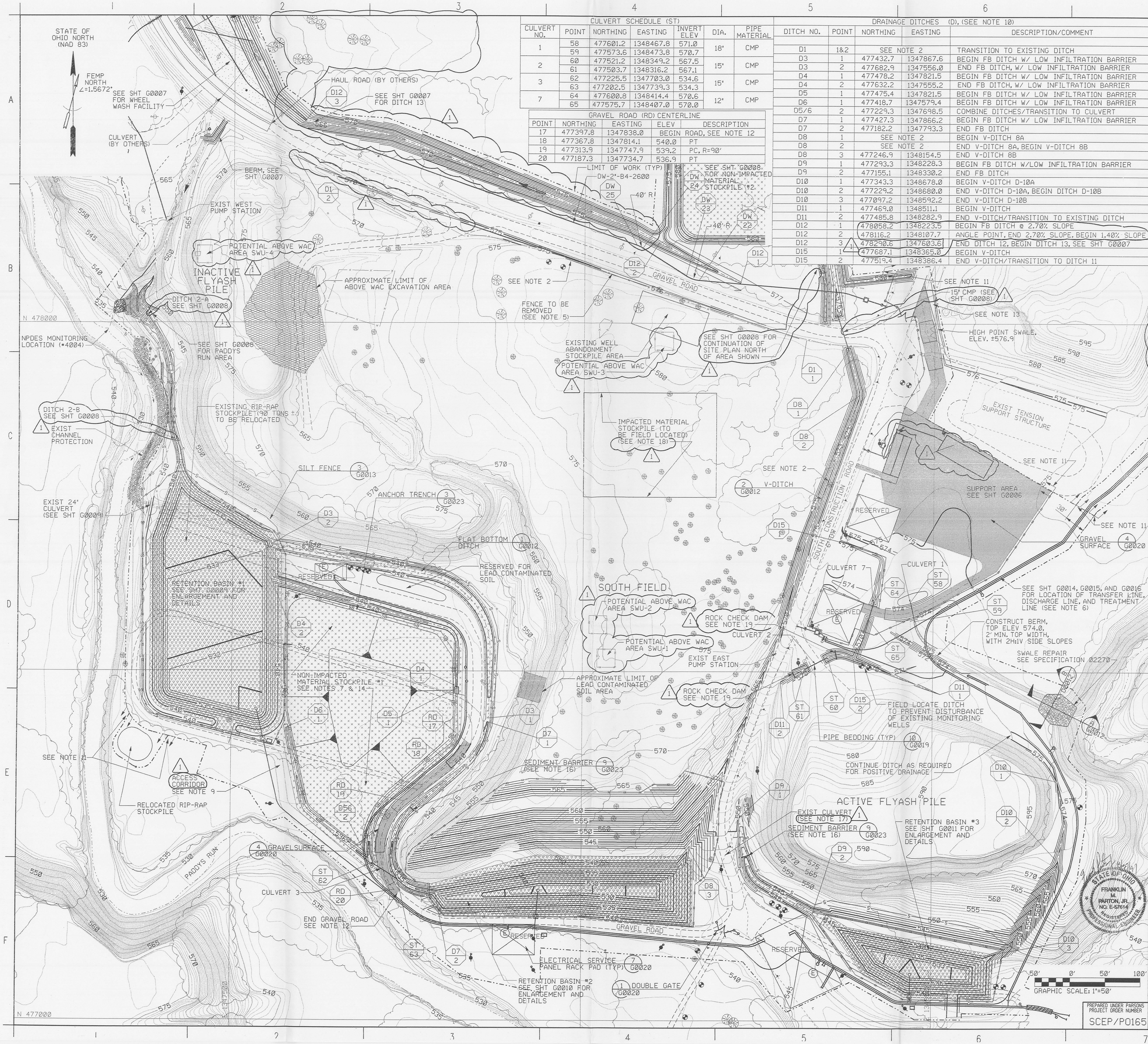

CULVERT SCHEDULE (ST)

CULVERT NO.	POINT	NORTHING	EASTING	INVERT ELEV	DIA.	PIPE MATERIAL
1	58	477601.2	1348467.8	571.0	18"	CMP
	59	477573.6	1348473.8	570.7		
2	60	477521.2	1348349.2	567.5	15"	CMP
	61	477503.7	1348316.2	567.1		
3	62	477225.5	1347703.0	534.6	15"	CMP
	63	477202.5	1347739.3	534.3		
7	64	477600.8	1348414.4	570.6	12"	CMP
	65	477575.7	1348407.0	570.0		

GRAVEL ROAD (RD) CENTERLINE

POINT	NORTHING	EASTING	ELEV	DESCRIPTION
17	477397.8	1347838.0	BEGIN ROAD, SEE NOTE 12	
18	477367.8	1347814.1	540.0	PT
19	477313.9	1347747.9	539.2	PC, R=90'
20	477187.3	1347734.7	536.9	PT

DRAINAGE DITCHES (D), (SEE NOTE 10)

DITCH NO.	POINT	NORTHING	EASTING	DESCRIPTION/COMMENT
D1	1&2	SEE NOTE 2		TRANSITION TO EXISTING DITCH
D3	1	477432.7	1347867.6	BEGIN FB DITCH W/ LOW INFILTRATION BARRIER
D3	2	477682.9	1347556.0	END FB DITCH, W/ LOW INFILTRATION BARRIER
D4	1	477478.2	1347821.5	BEGIN FB DITCH W/ LOW INFILTRATION BARRIER
D4	2	477632.2	1347555.2	END FB DITCH, W/ LOW INFILTRATION BARRIER
D5	1	477475.4	1347821.5	BEGIN FB DITCH W/ LOW INFILTRATION BARRIER
D6	1	477418.7	1347579.4	BEGIN FB DITCH W/ LOW INFILTRATION BARRIER
D5/6	2	477229.3	1347698.5	COMBINE DITCHES/TRANSITION TO CULVERT
D7	1	477427.3	1347866.2	BEGIN FB DITCH W/ LOW INFILTRATION BARRIER
D7	2	477182.2	1347793.3	END FB DITCH
D8	1	SEE NOTE 2		BEGIN V-DITCH 8A
D8	2	SEE NOTE 2		END V-DITCH 8A, BEGIN V-DITCH 8B
D8	3	477246.9	1348154.5	END V-DITCH 8B
D9	1	477293.3	1348228.3	BEGIN FB DITCH W/LOW INFILTRATION BARRIER
D9	2	477155.1	1348330.2	END FB DITCH
D10	1	477343.3	1348678.0	BEGIN V-DITCH D-10A
D10	2	477229.2	1348680.0	END V-DITCH D-10A, BEGIN DITCH D-10B
D10	3	477097.2	1348592.2	END V-DITCH D-10B
D11	1	477469.0	1348511.1	BEGIN V-DITCH
D11	2	477485.8	1348282.9	END V-DITCH/TRANSITION TO EXISTING DITCH
D12	1	478058.2	1348223.5	BEGIN FB DITCH @ 2.70% SLOPE
D12	2	478116.2	1348107.7	ANGLE POINT, END 2.70% SLOPE, BEGIN 1.40% SLOPE
D12	3	478290.6	1347603.6	END DITCH 12, BEGIN DITCH 13, SEE SHT G0007
D15	1	477687.1	1348365.0	BEGIN V-DITCH
D15	2	477519.4	1348386.4	END V-DITCH/TRANSITION TO DITCH 11

NOTES

1. RESERVED AREAS SHALL BE USED BY OTHER CONTRACTORS. SITE PREP CONTRACTOR SHALL ALLOW ACCESS TO THESE AREAS.
2. FIELD ROUTE THE DITCH. A MINIMUM OF 5' SHALL BE MAINTAINED FROM THE EDGE OF EXISTING ROAD TO CENTERLINE OF DITCH. AVOID EXISTING UTILITY/SEEPAGE COLLECTION LINES.
3. EROSION/SEDIMENT CONTROL MEASURES SHALL BE INSTALLED PRIOR TO EXCAVATION.
4. PROTECT ALL EXISTING MONITORING WELLS AND EXTRACTION WELLS TO REMAIN. SEE SPECIFICATION 02100.
5. REMOVE EXISTING PLASTIC CHAIN FENCE, POSTS, AND SIGNS WITHIN LIMIT OF WORK.
6. LIMIT OF WORK FOR THE TRANSFER, DISCHARGE AND TREATMENT LINES IS 15' BEYOND THE OUTSIDE LINE.
7. SURFACE OF NON-IMPACTED MATERIAL STOCKPILE AREAS SHALL BE COVERED WITH A GEOMEMBRANE LINER PRIOR TO PLACEMENT OF NON-IMPACTED MATERIAL.
8. SEE SHT G0012 FOR EROSION AND SEDIMENT CONTROL CONSTRUCTION SEQUENCE AND NOTES.
9. CLEAR TREES TO PROVIDE ACCESS CORRIDOR TO EXIST CHANNEL PROTECTION AT THE INACTIVE FLYASH PILE.
10. SEE SHT G0012 FOR DETAILS AND INVERT ELEVATIONS OF DITCHES.
11. THE LIMIT OF WORK AS SHOWN ON THE DRAWINGS INDICATES THE LOCATION OF THE PROPOSED CONSTRUCTION FENCE, EXCEPT BETWEEN MARKERS INDICATED.
12. GRADE TO MATCH EXISTING ROAD.
13. GRADE SWALE TO PROVIDE POSITIVE DRAINAGE.
14. NON-IMPACTED MATERIAL STOCKPILES SHALL BE IN ACCORDANCE WITH SPECIFICATION 02200 FOR MAXIMUM HEIGHT AND SIDE SLOPE LIMITS AND SEGREGATION REQUIREMENTS.
15. THE LIMIT OF WORK AS SHOWN ON DRAWINGS INDICATES CLEARING LIMITS EXCEPT AS NOTED ON THE PLAN SHEETS.
16. PLACE BARRIER AT UPSTREAM RADIUS POINT OF CURVE OF DITCH.
17. PLUG BOTH ENDS OF EXISTING 28" DIAMETER CULVERT WITH LEAN CONCRETE (ODOT CLASS 'S' CONCRETE IN ACCORDANCE WITH ITEM NO. 499 OF THE ODOT CONSTRUCTION AND MATERIAL SPECIFICATIONS).
18. PLACE A GEOTEXTILE OVER AREA OF IMPACTED MATERIAL STOCKPILE AS DIRECTED BY FDF PRIOR TO PLACEMENT OF IMPACTED MATERIAL.
19. ROCK CHECK DAM SHALL BE DUMPED ROCK FILL AS DESCRIBED BY ODOT EXCEPT SIZE SHALL BE LIMITED TO 4"-6" SIZE. ROCK CHECK DAM SHALL BE 1' HIGH BY 2' THICK ACROSS WIDTH OF DITCH.

DRINKING WATER COORDINATES (DW)

POINT	NORTHING	EASTING	DESCRIPTION
22	478082.1	1348164.0	BEGIN BEND
23	478068.3	1348145.7	END BEND
24	478108.1	1348084.0	BEGIN BEND
25	478112.2	1348075.7	END BEND

RELATED DWG NO.	DRAWING TITLE	SHEET NO.
92X-5900-X-00320	DRAWING INDEX	X0002
92X-5900-X-00321	LEGEND AND GENERAL NOTES	X0003
92X-5900-G-00348	EXISTING CONDITIONS PLAN	G0003
92X-5900-G-00284	SITE PLAN - SUPPORT AREA	G0006
92X-5900-G-00283	SITE PLAN - WHEEL WASH AREA	G0007
92X-5900-G-00390	SITE PLAN - PADDYS RUN AREA	G0008
92X-5900-G-00303	ENLARGEMENT RETENTION BASIN #1	G0009
92X-5900-G-00371	ENLARGEMENT RETENTION BASIN #2	G0010
92X-5900-G-00372	ENLARGEMENT RETENTION BASIN #3	G0011
92X-5900-G-00311	EROSION AND SEDIMENT CONTROL - SHEET 1 OF 2	G0012
92X-5900-G-00368	EROSION AND SEDIMENT CONTROL - SHEET 2 OF 2	G0013
92X-5900-G-00304	TRANSFER LINE - PLAN AND PROFILE - SHEET 1 OF 3	G0014
92X-5900-G-00305	TRANSFER LINE - PLAN AND PROFILE - SHEET 2 OF 3	G0015
92X-5900-G-00306	TRANSFER LINE - PLAN AND PROFILE - SHEET 3 OF 3	G0016
92X-5900-G-00309	MISCELLANEOUS DETAILS - SHEET 1 OF 3	G0020
92X-5900-G-00452	MISCELLANEOUS DETAILS - SHEET 3 OF 3	G0023

REV. NO.	ISSUE OR REVISION PURPOSE - DESCRIPTION	A-E	FERMCO	DATE
		INITIALS AND DATE		
	00000S			
1	ADDED 4 ABOVE WAC AREAS PER DCN: 20401-008 LABELED/REVISED DITCH COORDINATES, REVISED	JMU	N/A	6/27/97
	DITCH 12, ADDED NOTE 17, ADDED CONTOUR LABELS PER DCN: 20401-005 AND 007, REVISED			
	DITCH D1, ADDED ROCK CHECK DAM PER DCN: 20401-005			
0	CERTIFIED FOR CONSTRUCTION	JMU	N/A	6/13/97

UNITED STATES DEPARTMENT OF ENERGY
FERNALD ENVIRONMENTAL MANAGEMENT PROJECT

THIS DRAWING PREPARED BY
PARSONS
THE RALPH M. PARSONS CO. - PARSONS MAIN, INC. - ENGINEERING-SCIENCE, INC.
CINCINNATI, OHIO

PROJECT NAME
WASTE UNIT REMEDIATION
SOUTHERN WASTE UNITS - SITE PREPARATION PACKAGE

DRAWING TITLE
CIVIL
SITE PLAN

DRAWN BY	DATE	LEAD ENGINEER	DATE	CHECKED BY	DATE
D. REED	02/28/96	F.M. PARTON, JR.	6/12/97	K. GERARD	1/18/97

PLANT/BLDG. NO.	FLOOR	SCALE	CLASS
		1"=50'	

SUBMITTED FOR APPROVAL	FERMCO CRU APPROVAL	FERMCO PROJECT NO.
J.M. USHER 6/13/97	N/A	20400

A-E DATE

DOE PROJECT NO.	FEMP PROJECT NO.	DRAWING INDEX CODE NO.	SHEET NO.	REV. NO.
	WBS 1.1.1.1.1.2.3.6 00-90701	92X-5900-G-00282	G0005	1

PREPARED UNDER PARSONS PROJECT ORDER NUMBER
SCEP/P0165

STATE OF OHIO FRANKLIN M. PARTON, JR. NO. E-57614 REGISTERED PROFESSIONAL ENGINEER

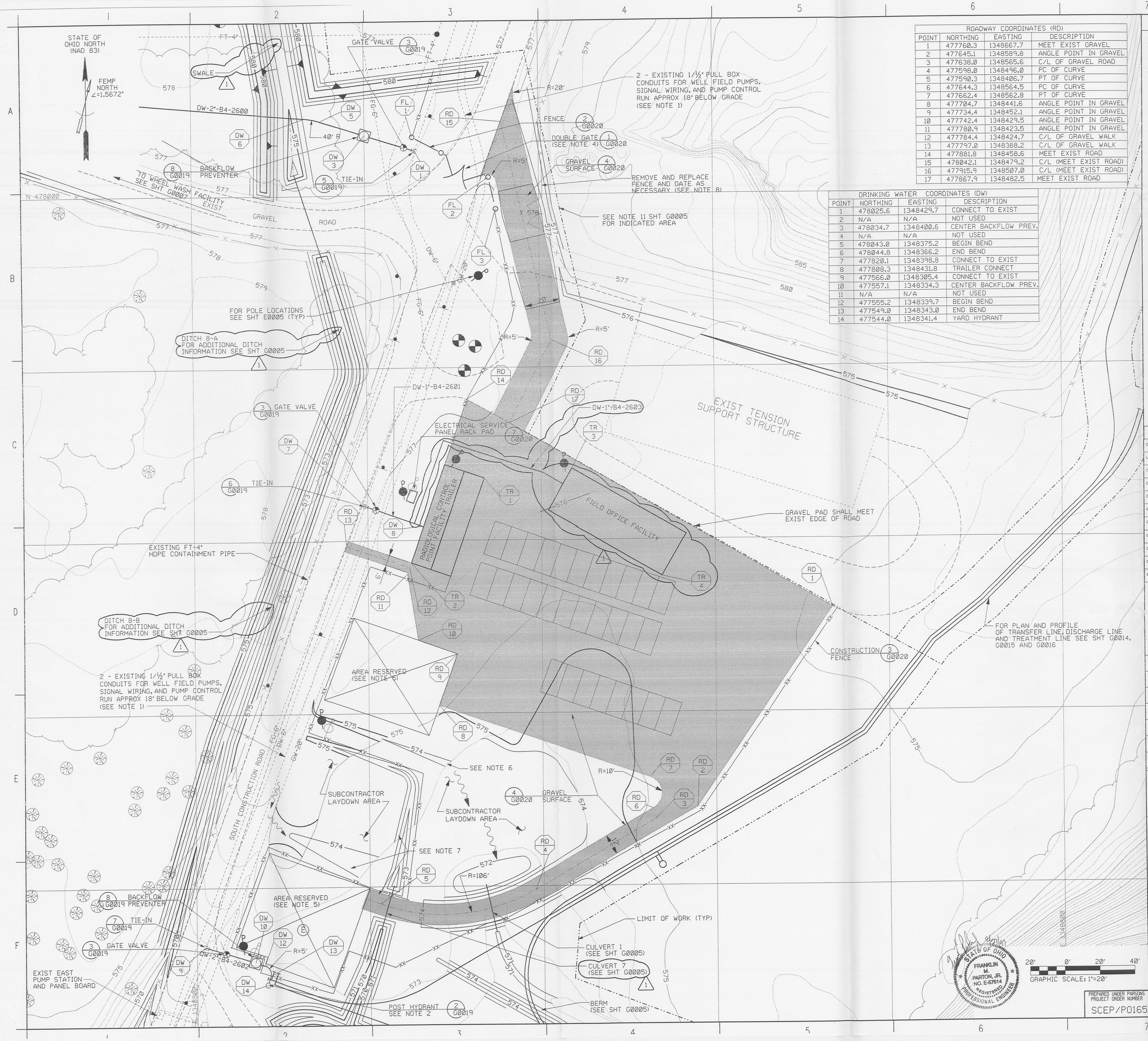

ROADWAY COORDINATES (RD)			
POINT	NORTHING	EASTING	DESCRIPTION
1	477760.3	1348667.7	MEET EXIST GRAVEL
2	477645.1	1348589.8	ANGLE POINT IN GRAVEL
3	477638.0	1348565.6	C/L OF GRAVEL ROAD
4	477598.0	1348496.0	PC OF CURVE
5	477590.3	1348406.7	PT OF CURVE
6	477644.3	1348564.5	PC OF CURVE
7	477662.4	1348562.8	PT OF CURVE
8	477704.7	1348441.6	ANGLE POINT IN GRAVEL
9	477734.4	1348452.1	ANGLE POINT IN GRAVEL
10	477742.4	1348429.5	ANGLE POINT IN GRAVEL
11	477780.9	1348423.5	ANGLE POINT IN GRAVEL
12	477784.4	1348424.7	C/L OF GRAVEL WALK
13	477797.0	1348388.2	C/L OF GRAVEL WALK
14	477881.8	1348458.6	MEET EXIST ROAD
15	478042.1	1348479.2	C/L (MEET EXIST ROAD)
16	477915.9	1348507.0	C/L (MEET EXIST ROAD)
17	477867.9	1348482.5	MEET EXIST ROAD

DRINKING WATER COORDINATES (DW)			
POINT	NORTHING	EASTING	DESCRIPTION
1	478025.6	1348429.7	CONNECT TO EXIST
2	N/A	N/A	NOT USED
3	478034.7	1348400.6	CENTER BACKFLOW PREV.
4	N/A	N/A	NOT USED
5	478043.0	1348375.2	BEGIN BEND
6	478044.8	1348366.2	END BEND
7	477820.1	1348398.8	CONNECT TO EXIST
8	477808.3	1348431.8	TRAILER CONNECT
9	477566.0	1348305.4	CONNECT TO EXIST
10	477557.1	1348334.3	CENTER BACKFLOW PREV.
11	N/A	N/A	NOT USED
12	477555.2	1348339.7	BEGIN BEND
13	477549.0	1348343.0	END BEND
14	477544.0	1348341.4	YARD HYDRANT

NOTES

1. UTILITY LOCATIONS ARE APPROXIMATE. INSPECT THE WORK AREA PRIOR TO CONSTRUCTION AND STARTING WORK AND NOTIFY FDF OF ANY DISCREPANCIES IN WRITING.
2. POST HYDRANT AT AFP FOR DUST CONTROL WATER SUPPLY ONLY. DIRECT CONNECTION TO HYDRANT FOR SPRAYING, NOT AUTHORIZED. PROVIDE TEMPORARY STORAGE TANK FOR SPRAY WATER. USE THE POST HYDRANT TO FILL TEMPORARY STORAGE TANK DURING NON-PEAK PERIODS OF WATER DEMAND AT THE FEMP.
3. SANITARY WATER IS TO BE COLLECTED IN TANK IN ACCORDANCE WITH SPECIFICATION 13125 AND LATER REMOVED AND DISPOSED OF BY SUBCONTRACTOR AT DIRECTIVE OF FDF.
4. DOUBLE SWING GATE AND ROADWAY MUST REMAIN CLEAR AT ALL TIMES FOR EMERGENCY VEHICLE ACCESS INTO PROJECT AREA. THE GATE IS TO BE CLOSED EXCEPT FOR EMERGENCY ACCESS.
5. AREAS RESERVED ARE FOR OTHER PROJECTS BUT CAN BE USED FOR INSTALLATION OF OVERHEAD ELECTRIC AND WATER LINES. MAINTAIN AND ALLOW ACCESS TO THESE AREAS DURING CONTRUCTION.
6. FIELD LOCATE 1' DEEP DRAINAGE SWALE NORTH OF SUBCONTRACTOR LAYDOWN AREA WITHIN THE SOIL CONTAMINATION AREA TO PREVENT SURFACE WATER RUN ON.
7. LOCATE 1' DEEP DRAINAGE SWALE AROUND PERIMETER OF SUBCONTRACTOR LAYDOWN AREA AS SHOWN. GRADE FOR POSITIVE DRAINAGE TO DITCH 11.
8. RELOCATE EXISTING FENCE AND GATE AS REQUIRED TO CONSTRUCT GRAVEL SURFACE AND DITCH. REINSTALL THE FENCE AND GATE ALONG LIMIT OF WORK.

FENCE COORDINATES (FL)			
POINT	NORTHING	EASTING	DESCRIPTION
1	478033.6	1348428.1	BEGIN OF NEW FENCE
2	478010.2	1348472.0	ANGLE POINT ON FENCE
3	477991.8	1348476.1	END OF NEW

PROPOSED TRAILER COORDINATES (TR)			
POINT	NORTHING	EASTING	DESCRIPTION
1	477836	1348468	NE CORNER
2	477787	1348426	SW CORNER
3	477841	1348518	NW CORNER
4	477778	1348570	SE CORNER

RELATED DWG NO.	DRAWING TITLE	SHEET NO.
92X-5900-X-00320	DRAWING INDEX	X0002
92X-5900-X-00321	LEGEND AND GENERAL NOTES	X0003
92X-5900-G-00281	MASTER SITE/UTILITY PLAN	G0002
92X-5900-G-00282	SITE PLAN	G0005
92X-5900-G-00283	SITE PLAN - WHEEL WASH AREA	G0007
92X-5900-G-00304	TRANSFER LINE - PLAN AND PROFILE - SHEET 1 OF 3	G0014
92X-5900-G-00305	TRANSFER LINE - PLAN AND PROFILE - SHEET 2 OF 3	G0015
92X-5900-G-00306	TRANSFER LINE - PLAN AND PROFILE - SHEET 3 OF 3	G0016
92X-5900-G-00307	WATER LINE DETAILS	G0019
92X-5900-G-00309	MISCELLANEOUS DETAILS - SHEET 1 OF 3	G0020
92X-5900-E-00379	ELECTRICAL - OVERALL SITE POWER PLAN	E0005

006009

REV. NO.	ISSUE OR REVISION PURPOSE - DESCRIPTION	A-E	FERMCO	DATE
1	REVISED FDF TRAILER SIZE & COORDINATES, ADDED 1' WATER LINE, ADDED DITCH LABELS,	JMU	N/A	8/21/97
	ADDED CONTOUR LABELS PER DCN: 20401-005 AND 006			
0	CERTIFIED FOR CONSTRUCTION	JMU	N/A	6/13/97

INITIALS AND DATE

UNITED STATES DEPARTMENT OF ENERGY
FERNALD ENVIRONMENTAL MANAGEMENT PROJECT

THIS DRAWING PREPARED BY
PARSONS
THE RALPH M. PARSONS CO. - PARSONS MAIN, INC. - ENGINEERING-SCIENCE, INC.
CINCINNATI, OHIO

PROJECT NAME
WASTE UNITS REMEDIATION
SOUTHERN WASTE UNITS - SITE PREPARATION PACKAGE

DRAWING TITLE
CIVIL
SITE PLAN - SUPPORT AREA

DRAWN BY	DATE	LEAD ENGINEER	DATE	CHECKED BY	DATE
D.R. FOX	02/28/96	F.M. PARTON, JR.	6/12/97	K. GERARD	01/18/97

PLANT/BLDG. NO.	FLOOR	SCALE	CLASS
		1"=20'	

SUBMITTED FOR APPROVAL	FERMCO CRU APPROVAL	FERMCO PROJECT NO.
J.M. USHER 6/13/97	N/A	20400
A-E DATE	DATE	

DOE PROJECT NO.	FEMP PROJECT NO.	DRAWING INDEX CODE NO.	SHEET NO.	REV. NO.
	WBS 1.1.1.1.2.3.6 00-90701	92X-5900-G-00284	G0006	1

PREPARED UNDER PARSONS PROJECT ORDER NUMBER SCEP/P0165

STATE OF OHIO FRANKLIN M. PARTON, JR. NO. E-57614 REGISTERED PROFESSIONAL ENGINEER

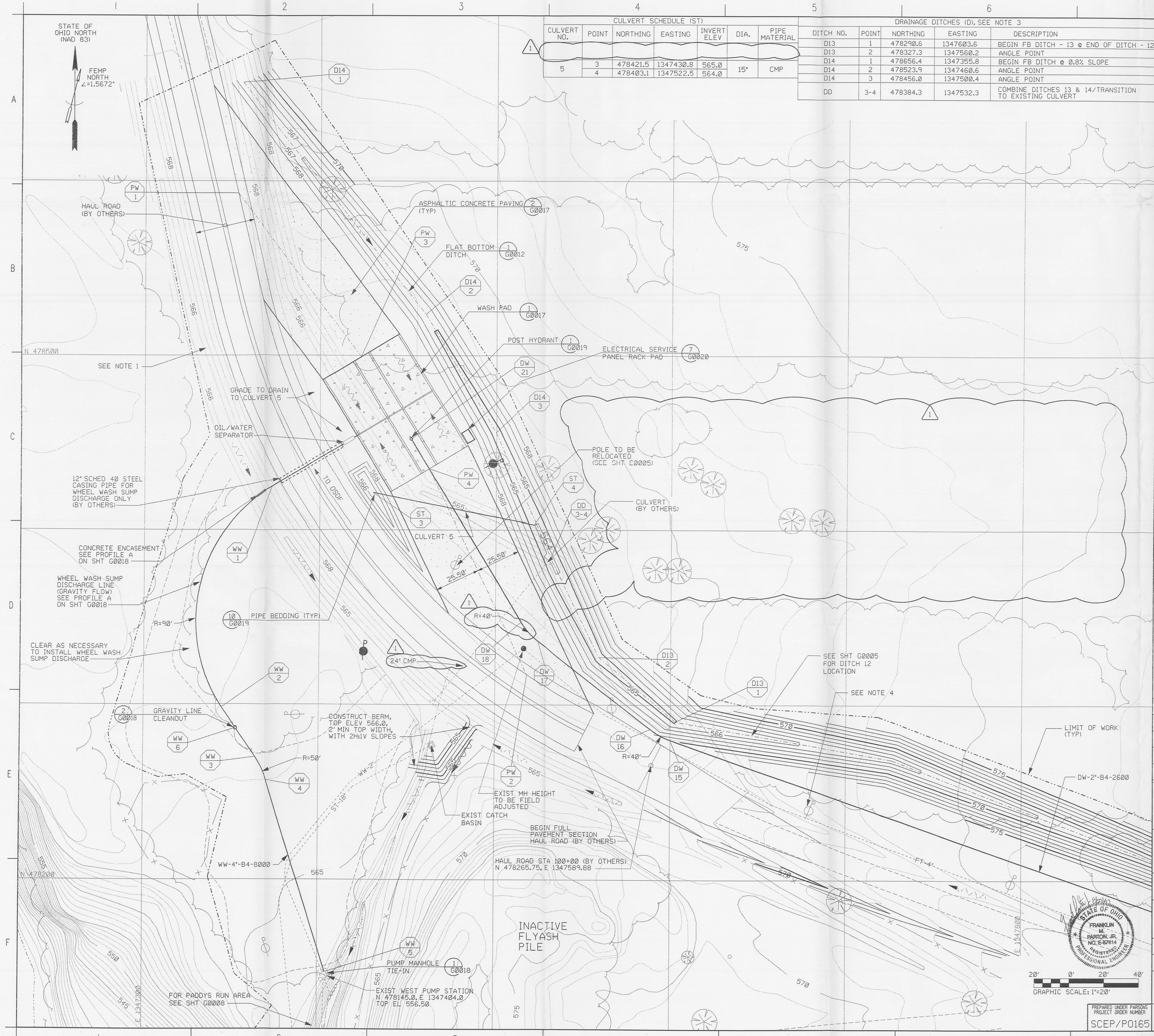

CULVERT SCHEDULE (ST)						
CULVERT NO.	POINT	NORTHING	EASTING	INVERT ELEV	DIA.	PIPE MATERIAL
5	3	478421.5	1347430.8	565.0	15"	CMP
	4	478403.1	1347522.5	564.0		

DRAINAGE DITCHES (D), SEE NOTE 3				
DITCH NO.	POINT	NORTHING	EASTING	DESCRIPTION
D13	1	478290.6	1347603.6	BEGIN FB DITCH - 13 @ END OF DITCH - 12
D13	2	478327.3	1347560.2	ANGLE POINT
D14	1	478656.4	1347355.8	BEGIN FB DITCH @ 0.8% SLOPE
D14	2	478523.9	1347460.6	ANGLE POINT
D14	3	478456.0	1347500.4	ANGLE POINT
DD	3-4	478384.3	1347532.3	COMBINE DITCHES 13 & 14/TRANSITION TO EXISTING CULVERT

NOTES

1. CONTOURS SHOWN ALONG THE PROPOSED HAUL ROAD WERE GENERATED FROM DESIGN DRAWINGS AND ARE APPROXIMATE AND COULD VARY. FIELD VERIFY AND INFORM FDF OF DIFFERENT CONDITIONS.
2.
3. SEE SHT G0012 FOR DETAILS AND INVERT ELEVATIONS OF DITCHES.
4. ADJUST GRADING AS NECESSARY TO PREVENT DISTURBANCE OF EXISTING POLES.

PAVEMENT AND WHEEL WASH COORDINATES (PW)			
POINT	NORTHING	EASTING	DESCRIPTION
1	478593.1	1347353.3	℄ OF PAVEMENT
2	478317.4	1347518.8	℄ OF PAVEMENT
3	478499.3	1347423.8	℄ WHEEL WASH
4	478435.2	1347462.6	℄ WHEEL WASH

DRINKING WATER COORDINATES (DW)			
POINT	NORTHING	EASTING	DESCRIPTION
15	478280.1	1347600.6	BEGIN BEND
16	478286.3	1347589.2	END BEND
17	478336.6	1347525.0	BEGIN BEND
18	478347.5	1347515.4	END BEND
19	N/A	N/A	NOT USED
20	N/A	N/A	NOT USED
21	478452.26	1347452.22	YARD HYDRANT

WASTE WATER COORDINATES (WW)			
POINT	NORTHING	EASTING	DESCRIPTION
1	478425.1	1347373.5	BEGIN BEND
2	478298.3	1347345.1	END BEND
3	478270.0	1347364.3	BEGIN BEND
4	478256.9	1347370.6	END BEND
5	478147.1	1347404.9	CONNECT TO EXIST
6	478286.5	1347353.1	CLEANOUT

RELATED DWG NO.	DRAWING TITLE	SHEET NO.
92X-5900-X-00320	DRAWING INDEX	X0002
92X-5900-X-00321	LEGEND AND GENERAL NOTES	X0003
92X-5900-G-00282	SITE PLAN	G0005
92X-5900-G-00390	SITE PLAN - PADDYS RUN AREA	G0008
92X-5900-G-00311	EROSION AND SEDIMENT CONTROL - SHEET 1 OF 2	G0012
92X-5900-G-00312	WHEEL WASH PAD - PLAN AND DETAILS	G0017
92X-5900-G-00310	WHEEL WASH SUMP DISCHARGE	G0018
92X-5900-G-00307	WATER LINE DETAILS	G0019
92X-5900-G-00309	MISCELLANEOUS DETAILS - SHEET 1 OF 3	G0020
92X-5900-E-00379	OVERALL SITE POWER PLAN	E0005

000010

REV. NO.	ISSUE OR REVISION PURPOSE - DESCRIPTION	A-E	FERMCO	DATE
1	ADDED CONTOUR LABELS, MOVED WOODCHIP STOCKPILE AREA, DELETED ACCESS ROAD AND CULVERT 4, REVISED DITCH GRADING PER DCN:20401-003 AND 005	JMU	N/A	8/27/97
0	CERTIFIED FOR CONSTRUCTION	JMU	N/A	8/13/97

INITIALS AND DATE

UNITED STATES DEPARTMENT OF ENERGY
FERNALD ENVIRONMENTAL MANAGEMENT PROJECT

THIS DRAWING PREPARED BY
PARSONS
THE RALPH M. PARSONS CO. - PARSONS MAIN, INC. - ENGINEERING-SCIENCE, INC.
CINCINNATI, OHIO

PROJECT NAME
WASTE UNITS REMEDIATION
SOUTHERN WASTE UNITS - SITE PREPARATION PACKAGE

DRAWING TITLE
CIVIL
SITE PLAN - WHEEL WASH AREA

DRAWN BY	DATE	LEAD ENGINEER	DATE	CHECKED BY	DATE
D. REED	02/28/96	F.M. PARTON, JR.	6/12/97	K. GERARD	01/18/97

PLANT/BLDG. NO.	FLOOR	SCALE	CLASS
		1"=20'	

SUBMITTED FOR APPROVAL	FERMCO CRU APPROVAL	FERMCO PROJECT NO.
J.M. USHER 6/13/97	N/A	20400

A-E DATE

DOE PROJECT NO.	FEMP PROJECT NO.	DRAWING INDEX CODE NO.	SHEET NO.	REV. NO.
	WBS 1.1.1.1.2.3.6 00-90701	92X-5900-G-00283	G0007	1

PREPARED UNDER PARSONS PROJECT ORDER NUMBER: SCEP/P0165

STATE OF OHIO — FRANKLIN M. PARTON, JR. NO. E-57614 — REGISTERED PROFESSIONAL ENGINEER

PIPE SCHEDULE (ST)					
POINT	NORTHING	EASTING	INVERT ELEV	DIA.	PIPE MATERIAL
64	MEET EXIST			18"	CORR. HDPE
65	EXTEND PIPE ALONG TOE OF SLOPE TO ELEV 540.0				

DRAINAGE DITCHES (D), SEE NOTE 3				
DITCH NO.	POINT	NORTHING	EASTING	DESCRIPTION/COMMENT
D2	1	478066	1347387	BEGIN V-DITCH 2A WITH INFILTRATION BARRIER
D2	2	477979	1347398	END V-DITCH 2A, BEGIN V-DITCH 2B WITH INFILTRATION BARRIER
D2	3	477796	1347427	END V-DITCH 2B

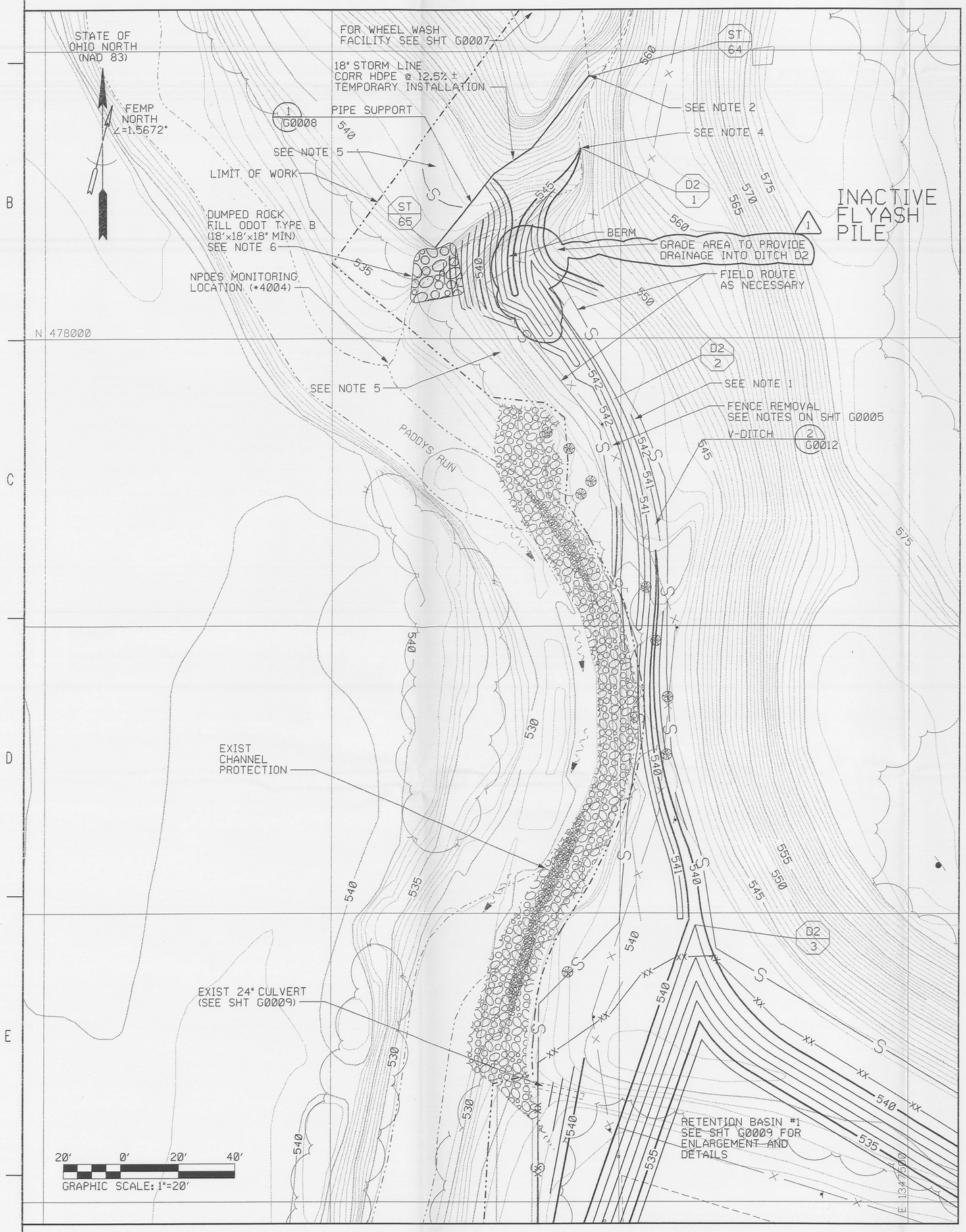

BERM SCHEDULE (BM)				
POINT	NORTHING	EASTING	ELEV	DESCRIPTION
1	478070.1	1348466.3	580.0	END BERM
2	478059.3	1348371.6	580.0	ANGLE POINT
3	478134.6	1348359.0	580.0	GRADE BREAK
4	478281.5	1348334.4	——	PI, R=25'
5	478281.5	1348185.5	580.0	GRADE BREAK
6	478281.5	1348134.1	——	PI, R=25'
7	478120.7	1348134.1	——	PI, R=25'
8	478120.7	1348332.2	——	PI, R=25'
9	478055.4	1348343.6	580.0	ANGLE POINT
10	478003.4	1348342.6	580.0	END BERM

1

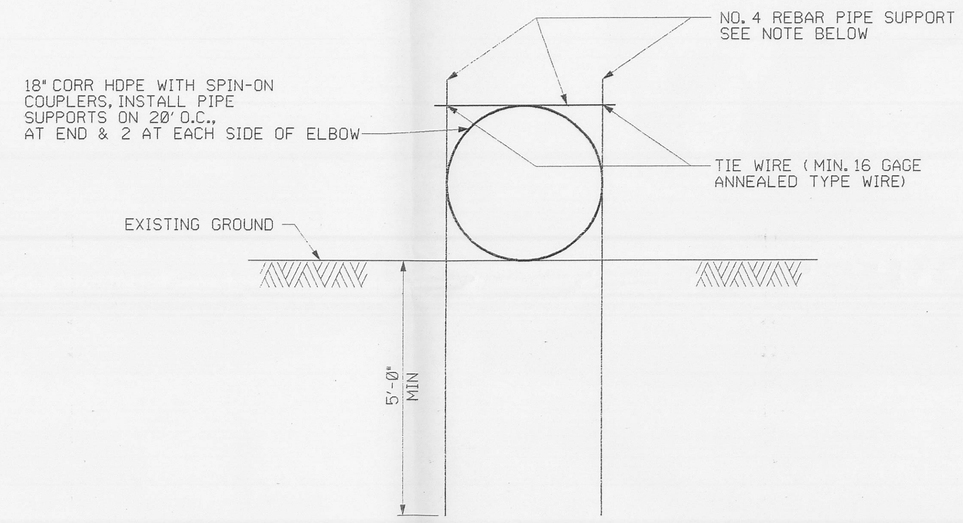

NOTE:
LOCATE SUPPORT RODS FIRMLY AGAINST SIDE OF PIPE IN VALLEY OF CORR. PLACE TOP SUPPORT ROD SNUG AGAINST TOP OF PIPE AND TIE WIRE TO SIDE SUPPORT RODS.

DETAIL 1 G0008 REF
PIPE SUPPORT
NTS

1

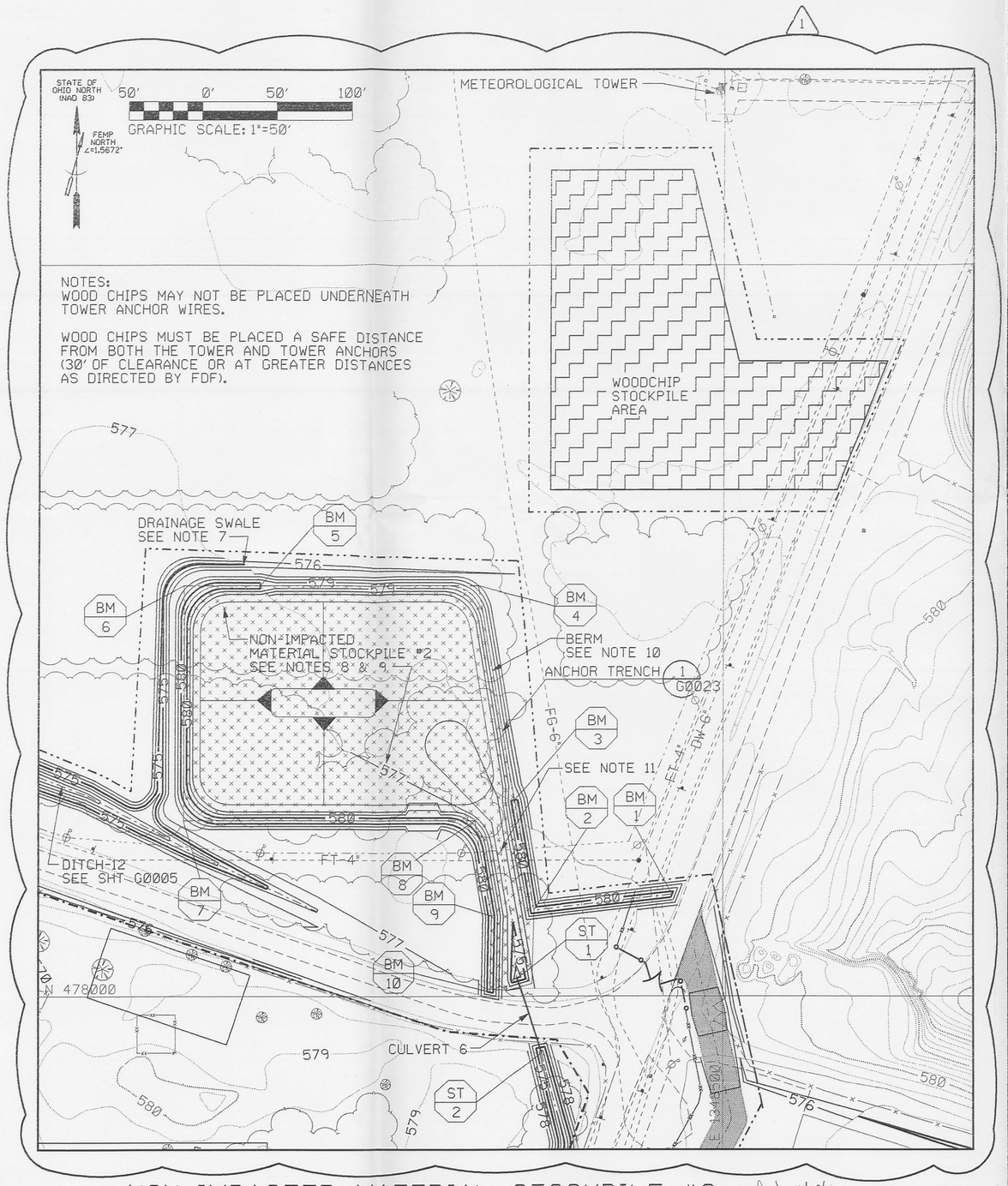

NON-IMPACTED MATERIAL STOCKPILE #2

CULVERT SCHEDULE (ST)						
CULVERT NO.	POINT	NORTHING	EASTING	INVERT ELEV	DIA.	PIPE MATERIAL
6	1	478013.2	1348360.6	573.9	15"	CMP
	2	477962.0	1348377.0	573.3		

STATE OF OHIO FRANKLIN M. PARTON, JR. NO. E-57614 REGISTERED PROFESSIONAL ENGINEER

NOTES

1. FIELD ROUTE DITCH D2. MAINTAIN THE EXISTING CHANNEL PROTECTION (RIP-RAP). CUT MATERIAL IS TO BE DISPOSED OF AS AN IMPACTED MATERIAL. FILL MATERIAL WILL BE "BORROW" SOIL.
2. EXPOSE END OF EXISTING 18" CORR HDPE PIPE AS REQUIRED TO CONNECT NEW HDPE TO EXISTING PIPE. USE CONNECTING BAND OR TRANSITION COLLAR, OR OTHER METHOD AS RECOMMENDED BY THE MANUFACTURER TO MAKE CONNECTION. BACKFILL EXPOSED PORTION OF EXISTING PIPE.
3. SEE SHT G0012 FOR DETAILS AND INVERT ELEVATIONS OF DITCHES.
4. BEGIN DITCH AND GRADE TO INTERCEPT ALL FLOW FROM EXISTING STREAM.
5. MAINTAIN EXISTING TREES NEAR PADDYS RUN AND WEST OF 18 INCH STORM LINE TO THE EXTENT POSSIBLE.
6. INSTALL GEOTEXTILE PRIOR TO PLACEMENT OF DUMPED ROCK FILL.
7. CONSTRUCT MINIMUM 1' DEEP GRASS-LINED DRAINAGE SWALE ON NORTH AND WEST SIDES OF BERM. GRADE TO DRAIN INTO DITCH 12 AS SHOWN. 1
8. NON-IMPACTED MATERIAL STOCKPILE SHALL BE IN ACCORDANCE WITH SPECIFICATION 02200 FOR MAXIMUM HEIGHT AND SIDE SLOPES.
9. SURFACE OF NON-IMPACTED MATERIAL STOCKPILE AREA SHALL BE COVERED WITH A GEOMEMBRANE LINER PRIOR TO PLACEMENT OF NON-IMPACTED MATERIAL.
10. CONSTRUCT BERM TO THE LINES AND GRADES SHOWN WITH A 1.5' MIN. TOP WIDTH AND 2H:1V SIDE SLOPES.
11. CONSTRUCT MINIMUM 1' DEEP GRASS-LINED DRAINAGE SWALE BETWEEN BERMS. GRADE TO DRAIN INTO CULVERT NUMBER 6 AS SHOWN. 1

RELATED DWG NO.	DRAWING TITLE	SHEET NO.
92X-5900-X-00320	DRAWING INDEX	X0002
92X-5900-X-00321	LEGEND AND GENERAL NOTES	X0003
92X-5900-G-00282	SITE PLAN	G0005
92X-5900-G-00283	SITE PLAN - WHEEL WASH AREA	G0007
92X-5900-G-00303	ENLARGEMENT RETENTION BASIN #1	G0009
92X-5900-G-00311	EROSION AND SEDIMENT CONTROL - SHEET 1 OF 2	G0012
92X-5900-G-00452	MISCELLANEOUS DETAILS - SHEET 3 OF 3	G0023

000011

REV. NO.	ISSUE OR REVISION PURPOSE - DESCRIPTION	A-E	FERMCO	DATE
1	ADDED CONTOUR LABELS, ADD WOODCHIP STOCK-PILE AREA, REVISED NOTE 7, ADDED NOTE 11, ADDED DRAINAGE NOTE, MOVED COORDINATE TABLES, REV. BERM ELEVATIONS, PER DCN: 20401-003 AND 005	JMU	N/A	8/27/97
0	CERTIFIED FOR CONSTRUCTION	JMU	N/A	6/13/97

INITIALS AND DATE

UNITED STATES DEPARTMENT OF ENERGY
FERNALD ENVIRONMENTAL MANAGEMENT PROJECT

THIS DRAWING PREPARED BY
PARSONS
THE RALPH M. PARSONS CO. - PARSONS MAIN, INC. - ENGINEERING-SCIENCE, INC.
CINCINNATI, OHIO

PROJECT NAME
WASTE UNITS REMEDIATION
SOUTHERN WASTE UNITS - SITE PREPARATION PACKAGE

DRAWING TITLE
CIVIL
SITE PLAN - PADDYS RUN AREA

DRAWN BY	DATE	LEAD ENGINEER	DATE	CHECKED BY	DATE
D. REED	12/26/96	F.M. PARTON, JR.	6/12/97	K. GERARD	01/18/97

PLANT/BLDG. NO.	FLOOR	SCALE	CLASS
		AS SHOWN	

SUBMITTED FOR APPROVAL	FERMCO CRU APPROVAL	FERMCO PROJECT NO.
J.M. USHER 6/13/97 (A-E, DATE)	N/A (DATE)	20400

PREPARED UNDER PARSONS PROJECT ORDER NUMBER	DOE PROJECT NO.	FEMP PROJECT NO.	DRAWING INDEX CODE NO.	SHEET NO.	REV. NO.
SCEP/P0165		WBS 1.1.1.1.2.3.6 00-90701	92X-5900-G-00390	G0008	1

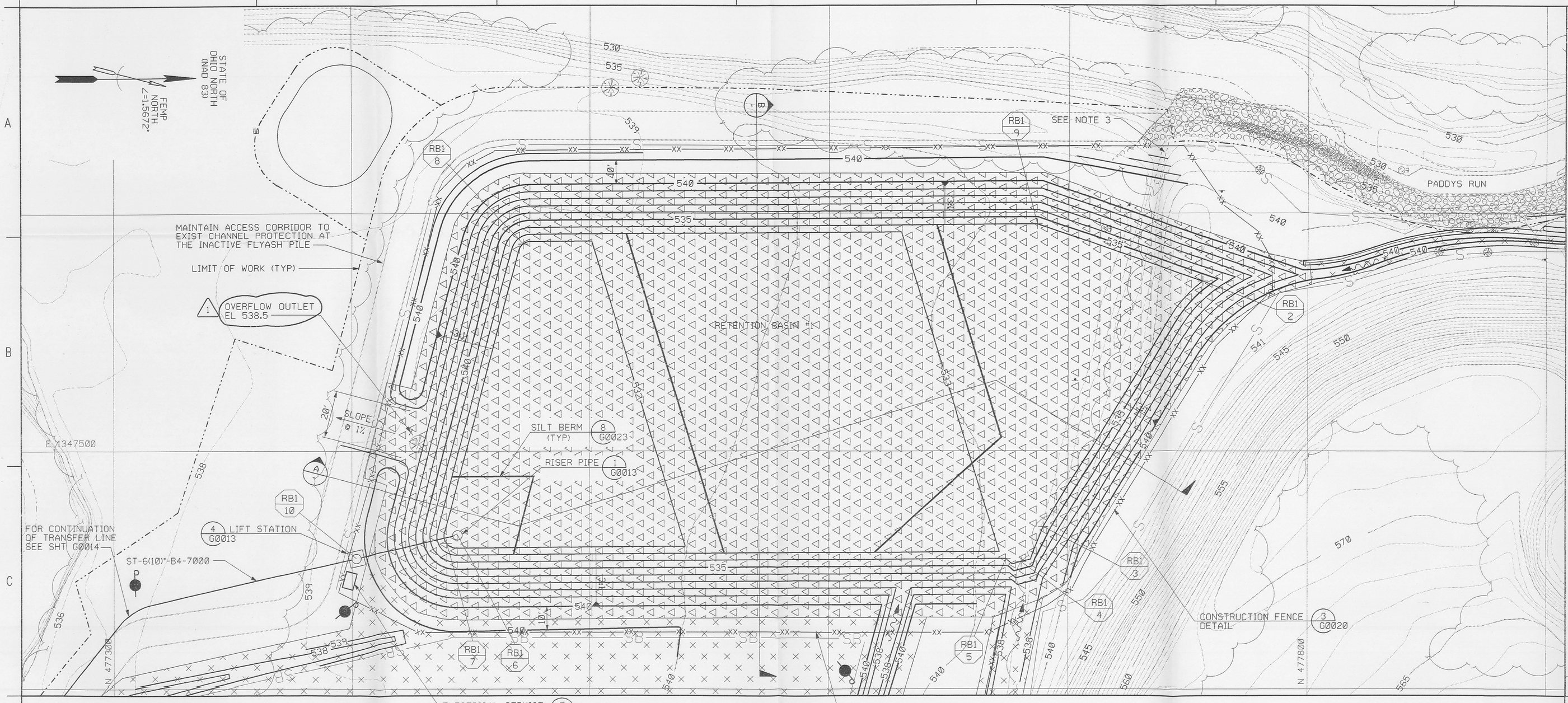

PLAN

GRAPHIC SCALE: 1"=20'

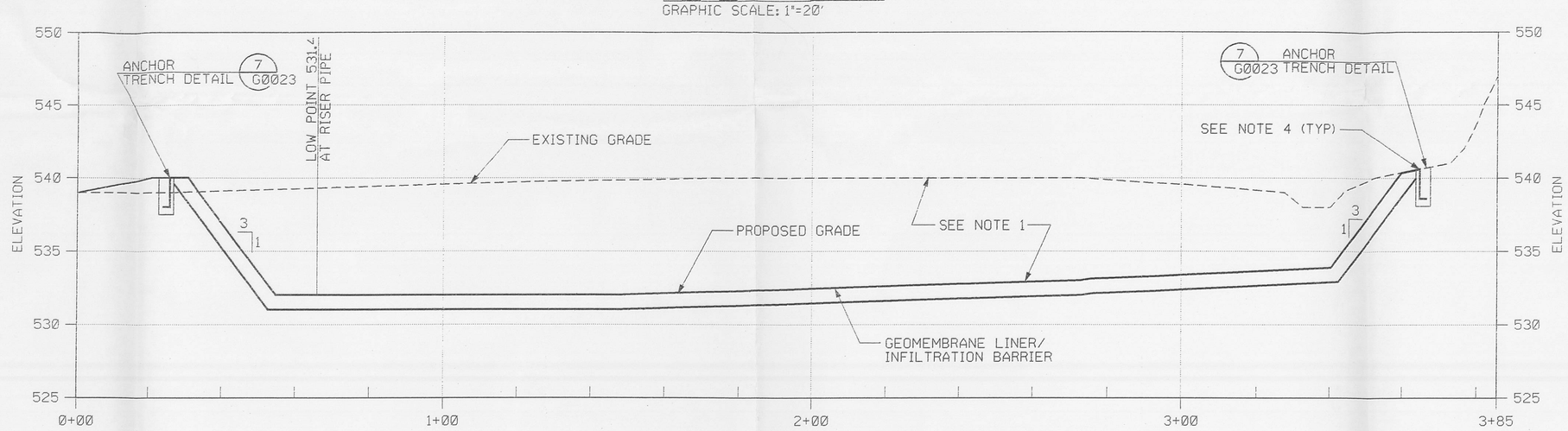

SECTION A

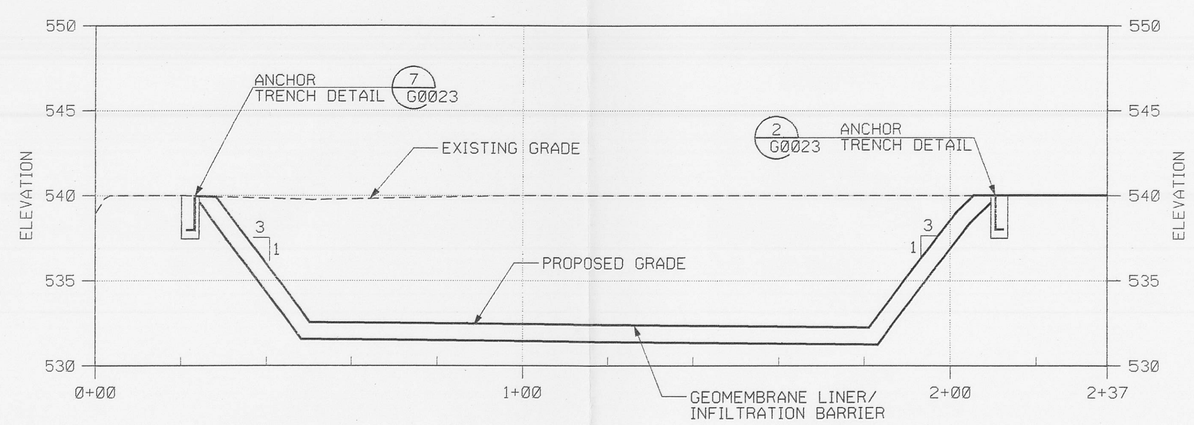

SECTION B

NOTES

1. TOP TWELVE INCHES OF MATERIAL FROM RETENTION BASIN #1 IS TO BE REMOVED AND DISPOSED OF AS IMPACTED MATERIAL IN THE IMPACTED MATERIAL STOCKPILE. REMAINING SOIL IS TO BE PLACED IN THE NON-IMPACTED MATERIAL STOCKPILES.
2. FOR UNDERGROUND UTILITIES IN AREA SEE SHT G0014.
3. REMOVE CULVERT AND BACKFILL TO EXISTING GRADE. COMPACT BACKFILL TO 95% STANDARD PROCTOR. COVER WITH ROCK. CULVERT TO BE DISPOSED IN THE IMPACTED MATERIAL STOCKPILE.
4. EXTEND GEOMEMBRANE LINER TO COVER ALL EXPOSED SANDS AND GRAVELS OF THE GMA.
5. IN AREAS WHERE CONSTRUCTION FENCE CROSSES GEOMEMBRANE FENCE POST SHALL BE NON-PENETRATING TYPE ANCHORAGE.

BOTTOM OF BASIN COORDINATES (RB1)

POINT	NORTHING	EASTING	DESCRIPTION
1	N/A	N/A	NOT USED
2	477756.3	1347429.3	CORNER BASIN
3	477689.6	1347532.4	CORNER BASIN
4	477680.5	1347547.3	CORNER BASIN
5	477673.9	1347546.0	CORNER BASIN
6	477445.0	1347535.9	RISER PIPE
7	477440.5	1347539.4	CORNER BASIN
8	477472.3	1347413.7	CORNER BASIN
9	477686.9	1347405.3	CORNER BASIN
10	477402.0	1347545.9	LIFT STATION

LEGEND

GEOMEMBRANE LINER

GEOMEMBRANE LINER/ INFILTRATION BARRIER

RELATED DWG NO.	DRAWING TITLE	SHEET NO.
92X-5900-X-00320	DRAWING INDEX	X0002
92X-5900-X-00321	LEGEND AND GENERAL NOTES	X0003
92X-5900-G-00304	TRANSFER LINE - PLAN AND PROFILE - SHEET 1 OF 3	G0014
92X-5900-G-00368	EROSION AND SEDIMENT CONTROL - SHEET 2 OF 2	G0013
92X-5900-G-00309	MISCELLANEOUS DETAILS - SHEET 1 OF 3	G0020
92X-5900-G-00452	MISCELLANEOUS DETAILS - SHEET 3 OF 3	G0023

000012

REV. NO.	ISSUE OR REVISION PURPOSE - DESCRIPTION	A-E	FERMCO	DATE
1	REVISED OVERFLOW OUTLET ELEVATION, ADDED CONTOUR LABELS, PER DCN: 20401-005.	JMU	N/A	9/27/97
	REVISED COORDINATE 10.			
0	CERTIFIED FOR CONSTRUCTION	JMU	N/A	6/13/97

INITIALS AND DATE

UNITED STATES DEPARTMENT OF ENERGY
FERNALD ENVIRONMENTAL MANAGEMENT PROJECT

THIS DRAWING PREPARED BY
PARSONS
THE RALPH M. PARSONS CO. - PARSONS MAIN, INC. - ENGINEERING-SCIENCE, INC.
CINCINNATI, OHIO

PROJECT NAME
WASTE UNIT REMEDIATION
SOUTHERN WASTE UNITS - SITE PREPARATION PACKAGE

DRAWING TITLE
CIVIL
ENLARGEMENT RETENTION BASIN #1

STATE OF OHIO — FRANKLIN M. PARTON, JR. NO. E-57614 — REGISTERED PROFESSIONAL ENGINEER — 6/12/97

PROFILE (1) VERTICAL GRAPHIC SCALE: 1"=5'
PROFILE HORIZONTAL GRAPHIC SCALE: 1"=20'

DRAWN BY	DATE	LEAD ENGINEER	DATE	CHECKED BY	DATE
R. LINDGREN	02/28/96	F.M. PARTON, JR.	6/12/97	K. GERARD	1/18/97

PLANT/BLDG. NO.	FLOOR	SCALE	CLASS
		1"=20'	

SUBMITTED FOR APPROVAL	FERMCO CRU APPROVAL	FERMCO PROJECT NO.
J.M. USHER 6/13/97	N/A	20400
A-E DATE	DATE	

PREPARED UNDER PARSONS PROJECT ORDER NUMBER	DOE PROJECT NO.	FEMP PROJECT NO.	DRAWING INDEX CODE NO.	SHEET NO.	REV. NO.
SCEP/P0165		WBS 1.1.1.1.2.3.6 00-90701	92X-5900-G-00303	G0009	1

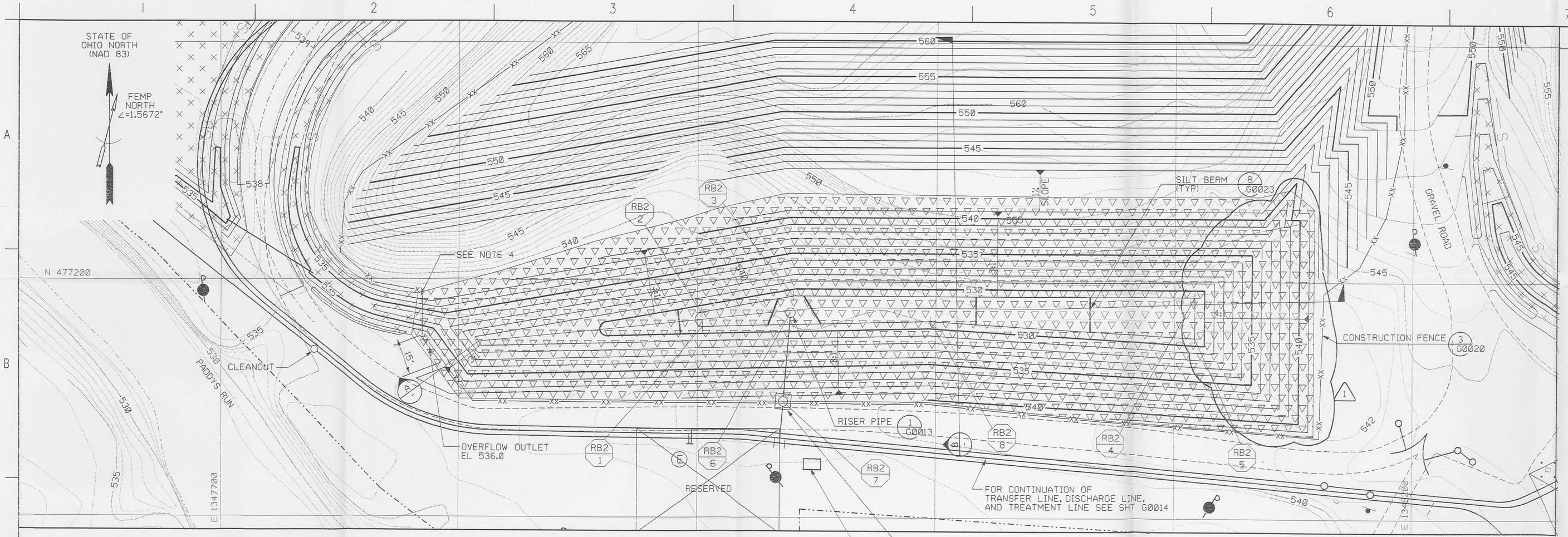

PLAN

GRAPHIC SCALE: 1"=20'

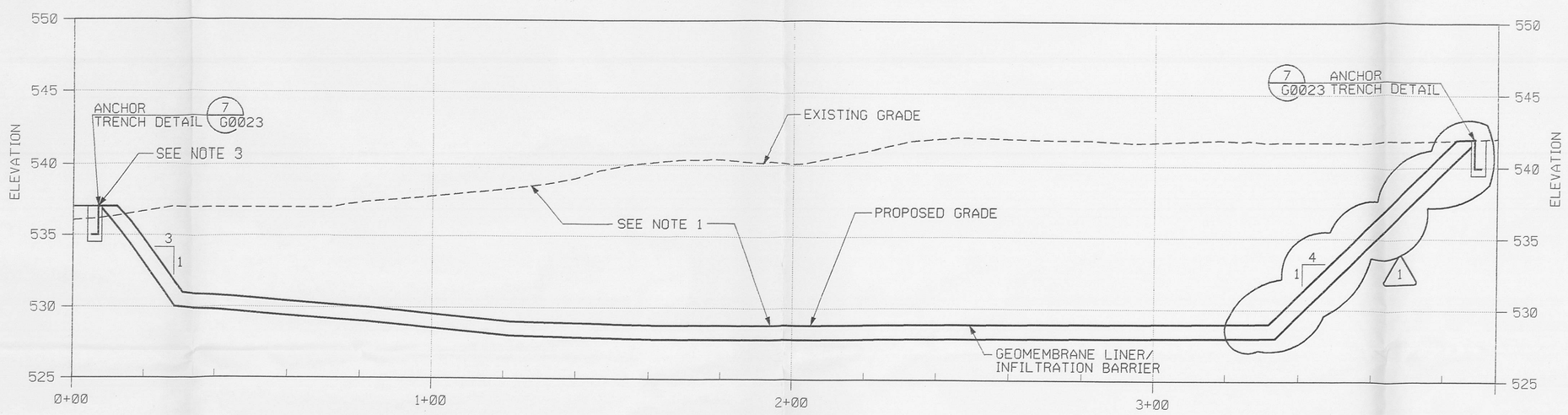

SECTION A

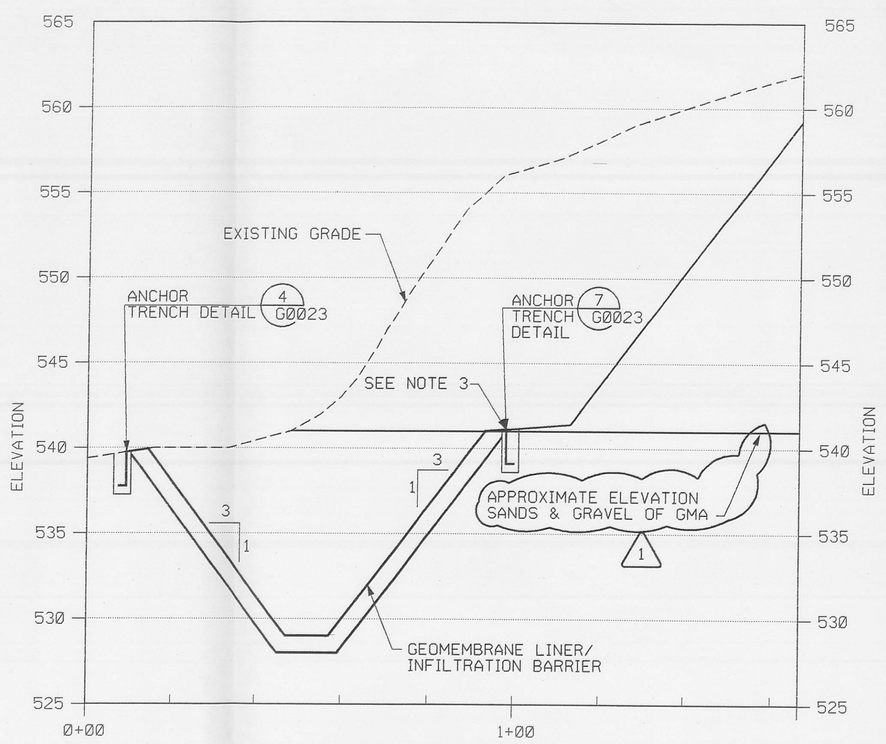

SECTION B

NOTES

1. TOP 12 INCHES OF MATERIAL FROM RETENTION BASIN #2 IS TO BE REMOVED AND DISPOSED OF AS IMPACTED MATERIAL IN THE IMPACTED MATERIAL STOCKPILE. REMAINING SOIL IS TO BE PLACED IN THE NON-IMPACTED MATERIAL STOCKPILES.
2. FOR UNDERGROUND UTILITIES IN AREA SEE SHT G0014.
3. EXTEND GEOMEMBRANE LINER TO COVER ALL EXPOSED SANDS AND GRAVELS OF THE GMA.
4. IN AREAS WHERE CONSTRUCTION FENCE CROSSES GEOMEMBRANE FENCE POST SHALL BE NON-PENETRATING TYPE ANCHORAGE.

LEGEND

GEOMEMBRANE LINER

GEOMEMBRANE LINER/ INFILTRATION BARRIER

BOTTOM OF BASIN COORDINATES (RB2)			
POINT	NORTHING	EASTING	DESCRIPTION
1	477180.5	1347902.7	BEGIN 3' RADIUS
2	477186.4	1347902.1	END 3' RADIUS
3	477193.9	1347942.0	CORNER BASIN
4	477193.4	1348109.0	CORNER BASIN
5	477176.1	1348109.0	CORNER BASIN
6	477186.4	1347940.1	RISER PIPE
7	477149.0	1347937.0	LIFT STATION
8	477182.9	1347998.3	CORNER BASIN

RELATED DWG NO.	DRAWING TITLE	SHEET NO.
92X-5900-X-00320	DRAWING INDEX	X0002
92X-5900-X-00321	LEGEND AND GENERAL NOTES	X0003
92X-5900-G-00304	TRANSFER LINE - PLAN AND PROFILE - SHEET 1 OF 3	G0014
92X-5900-G-00368	EROSION AND SEDIMENT CONTROL - SHEET 2 OF 2	G0013
92X-5900-G-00309	MISCELLANEOUS DETAILS - SHEET 1 OF 3	G0020
92X-5900-G-00452	MISCELLANEOUS DETAILS - SHEET 3 OF 3	G0023

000013

REV. NO.	ISSUE OR REVISION PURPOSE - DESCRIPTION	A-E	FERMCO	DATE
1	INCREASED SIZE OF RETENTION BASIN NO.2, REVISED LOCATION OF CONSTRUCTION FENCE	JMU	N/A	6/27/97
	ADDED SANDS AND GRAVEL OF GMA ELEVATION NOTE, ADD CONTOUR LABELS. PER DCN:20401-005			
0	CERTIFIED FOR CONSTRUCTION	JMU	N/A	6/13/97

INITIALS AND DATE

UNITED STATES DEPARTMENT OF ENERGY
FERNALD ENVIRONMENTAL MANAGEMENT PROJECT

THIS DRAWING PREPARED BY
PARSONS
THE RALPH M. PARSONS CO. - PARSONS MAIN, INC. - ENGINEERING-SCIENCE, INC.
CINCINNATI, OHIO

PROJECT NAME
WASTE UNIT REMEDIATION
SOUTHERN WASTE UNITS - SITE PREPARATION PACKAGE

DRAWING TITLE
CIVIL
ENLARGEMENT RETENTION BASIN #2

STATE OF OHIO — FRANKLIN M. PARTON, JR. NO. E-57614 — REGISTERED PROFESSIONAL ENGINEER — 6/13/97

PROFILE (1) GRAPHIC SCALE: 1"=5' VERTICAL
PROFILE (1) GRAPHIC SCALE: 1"=20' HORIZONTAL

DRAWN BY	DATE	LEAD ENGINEER	DATE	CHECKED BY	DATE
R. LINDGREN	02/28/96	F.M. PARTON, JR.	6/12/97	K. GERARD	1/18/97

PLANT/BLDG. NO.	FLOOR	SCALE	CLASS
		1"=20'	

SUBMITTED FOR APPROVAL	FERMCO CRU APPROVAL	FERMCO PROJECT NO.
J.M. USHER 6/13/97	N/A	20400

A-E DATE — DATE

DOE PROJECT NO.	FEMP PROJECT NO.	DRAWING INDEX CODE NO.	SHEET NO.	REV. NO.
	WBS 1.1.1.1.2.3.6 00-90701	92X-5900-G-00371	G0010	1

PREPARED UNDER PARSONS PROJECT ORDER NUMBER
SCEP/PO165

PLAN

20' 0' 20' 40'
GRAPHIC SCALE: 1"=20'

NOTES

1. TOP 12 INCHES OF MATERIAL FROM RETENTION BASIN #3 IS TO BE REMOVED AND DISPOSED OF AS IMPACTED MATERIAL IN THE IMPACTED MATERIAL STOCKPILE. REMAINING SOIL IS TO BE PLACED IN THE NON-IMPACTED MATERIAL STOCKPILES.
2. FOR UNDERGROUND UTILITIES IN AREA SEE SHEET G0015.
3. PROTECT ALL EXISTING MONITORING WELLS THAT ARE TO REMAIN.
4. EXTEND GEOMEMBRANE LINER TO COVER ALL EXPOSED SANDS AND GRAVELS OF THE GMA.
5. AFP SUBJECT TO LOCALIZED SLOUGHING/SLIDING DURING EXCAVATION OPERATIONS. EXERCISE EXTREME CAUTION WHEN WORKING NEAR THE TOE OF THE AFP.
6. AREAS RESERVED FOR FUTURE PROJECTS BY OTHERS EXCEPT FOR INSTALLATION OF OVERHEAD ELECTRIC AND UNDERGROUND UTILITIES. MAINTAIN AND ALLOW ACCESS TO THESE AREAS DURING CONSTRUCTION.
7. IN AREAS WHERE CONSTRUCTION FENCE CROSSES GEOMEMBRANE FENCE POST SHALL BE NON-PENETRATING TYPE ANCHORAGE.
8. ANCHOR TRENCH FOR GEOMEMBRANCE LINER SHALL BE LOCATED AT ELEVATION 541.0 OR TOP OF RETENTION BASIN SIDE SLOPE.
9. SEE SHEET G0005 FOR DITCH CONSTRUCTION INFORMATION. 1

BOTTOM OF BASIN COORDINATES (RB3)			
POINT	NORTHING	EASTING	DESCRIPTION
1	477101.1	1348412.9	CORNER BASIN
2	477074.0	1348550.6	CORNER BASIN
3	477060.2	1348550.1	CORNER BASIN
4	477062.6	1348468.7	CORNER BASIN
5	477087.6	1348422.3	CORNER BASIN
6	477067.6	1348470.0	RISER PIPE
7	477036.9	1348469.2	LIFT STATION

LEGEND

GEOMEMBRANE LINER

GEOMEMBRANE LINER/ INFILTRATION BARRIER

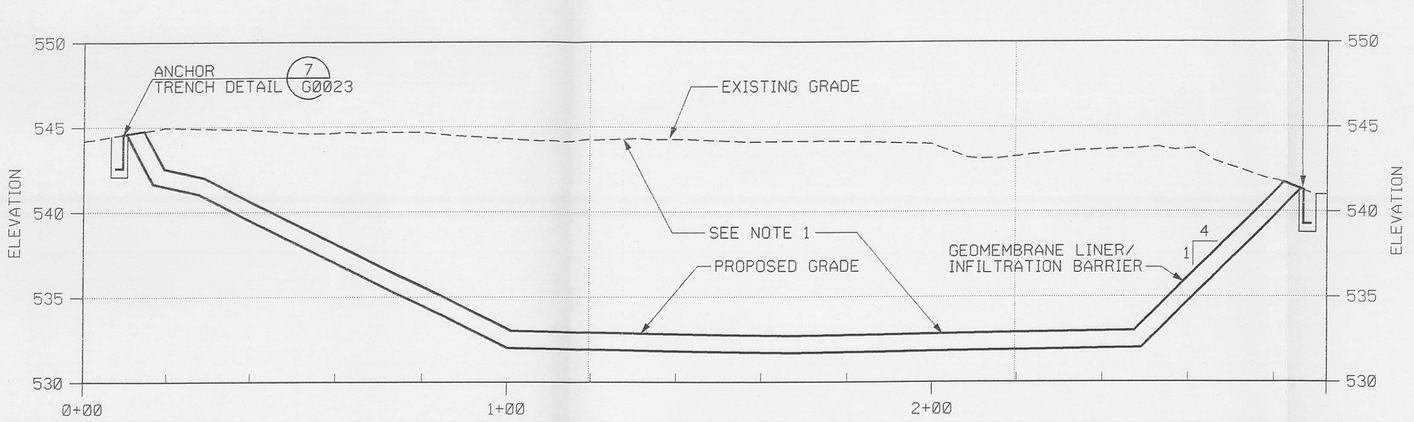

SECTION A -

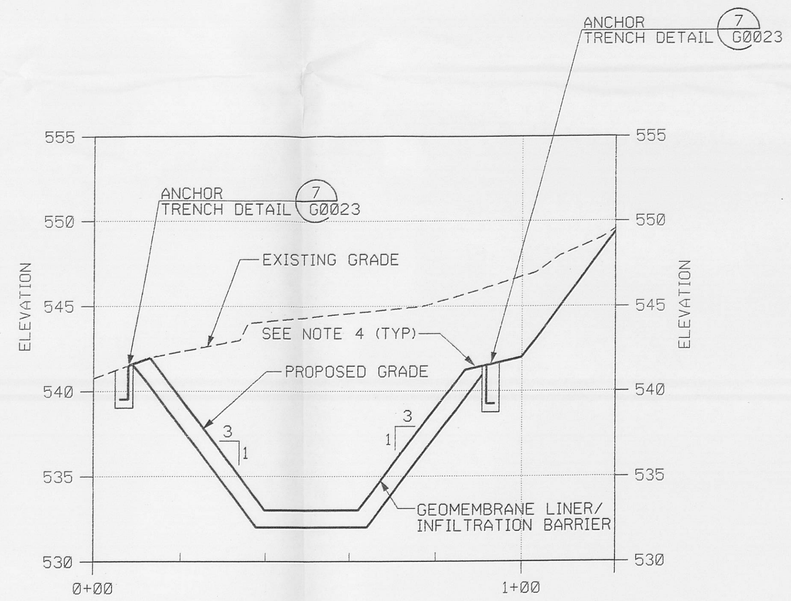

SECTION B -

RELATED DWG NO.	DRAWING TITLE	SHEET NO.
92X-5900-X-00320	DRAWING INDEX	X0002
92X-5900-X-00321	LEGEND AND GENERAL NOTES	X0003
92X-5900-G-00311	EROSION AND SEDIMENT CONTROL - SHEET 1 OF 2	G0012
92X-5900-G-00305	TRANSFER LINE - PLAN AND PROFILE - SHEET 2 OF 3	G0015
92X-5900-G-00368	EROSION AND SEDIMENT CONTROL - SHEET 2 OF 2	G0013
92X-5900-G-00309	MISCELLANEOUS DETAILS - SHEET 1 OF 3	G0020
92X-5900-G-00452	MISCELLANEOUS DETAILS - SHEET 3 OF 3	G0023

000014

REV. NO.	ISSUE OR REVISION PURPOSE - DESCRIPTION	A-E	FERMCO	DATE
1	ADDED CONTOUR LABELS, LABEL DITCH, ADDED TEXT TO GRAPHIC SCALE, LABEL TRANSFER LINE, ADDED NOTE 9 PER DCN: 20401-005	JMU	N/A	8/27/97
0	CERTIFIED FOR CONSTRUCTION	JMU	N/A	6/13/97

INITIALS AND DATE

UNITED STATES DEPARTMENT OF ENERGY
FERNALD ENVIRONMENTAL MANAGEMENT PROJECT

THIS DRAWING PREPARED BY
PARSONS
THE RALPH M. PARSONS CO. - PARSONS MAIN, INC. - ENGINEERING-SCIENCE, INC.
CINCINNATI, OHIO

PROJECT NAME
WASTE UNIT REMEDIATION
SOUTHERN WASTE UNITS - SITE PREPARATION PACKAGE

DRAWING TITLE
CIVIL
ENLARGEMENT RETENTION BASIN #3

STATE OF OHIO — FRANKLIN M. PARTON, JR. NO. E-57614 — REGISTERED PROFESSIONAL ENGINEER — 8/27/97

5' 0' 5' 10'
PROFILE GRAPHIC SCALE: 1"=5' VERTICAL
20' 0' 20' 40'
PROFILE GRAPHIC SCALE: 1"=20' HORIZONTAL

DRAWN BY	DATE	LEAD ENGINEER	DATE	CHECKED BY	DATE
R. LINDGREN	02/28/96	F.M. PARTON, JR.	6/12/97	K. GERARD	1/18/97

PLANT/BLDG. NO.	FLOOR	SCALE	CLASS
		1"=20'	

SUBMITTED FOR APPROVAL	FERMCO CRU APPROVAL	FERMCO PROJECT NO.
J.M. USHER 6/13/97	N/A	20400

A-E DATE — DATE

PREPARED UNDER PARSONS PROJECT ORDER NUMBER	DOE PROJECT NO.	FEMP PROJECT NO.	DRAWING INDEX CODE NO.	SHEET NO.	REV. NO.
SCEP/PO165		WBS 1.1.1.1.2.3.6 00-90701	92X-5900-G-00372	G0011	1

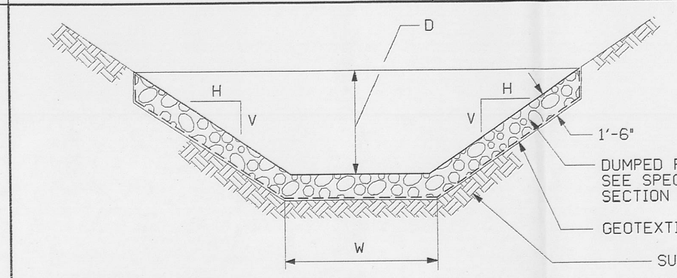

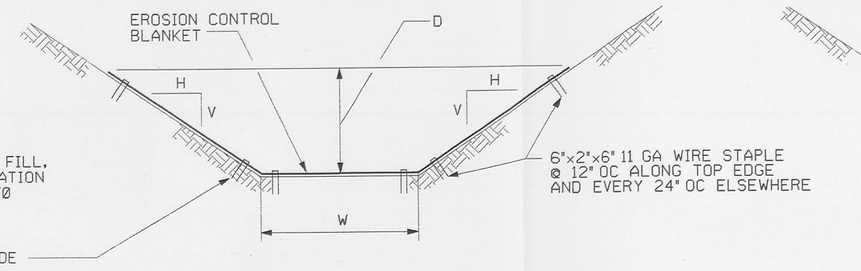

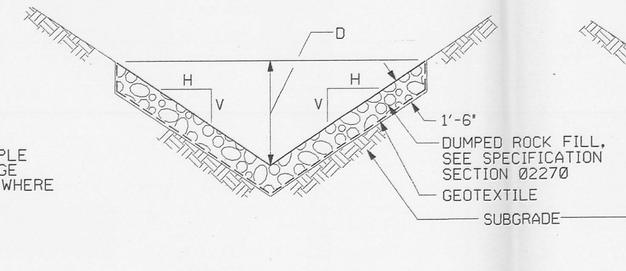

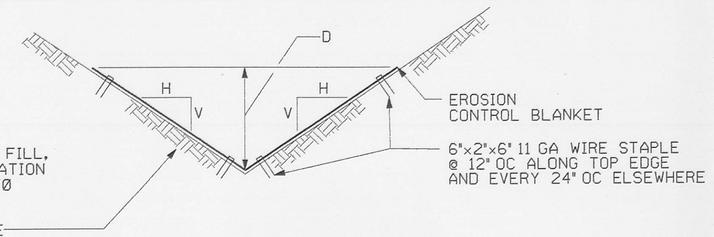

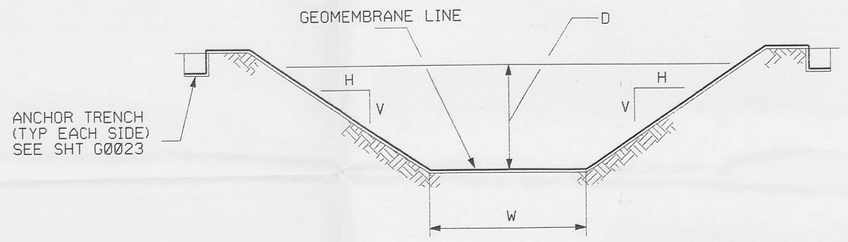

NOTE:

1. SEE DITCH SCHEDULE FOR CHANNEL LINING, DEPTH (D), BOTTOM WIDTH (W), HORIZONTAL (H) AND VERTICAL (V) COMPONENT OF DITCH SIDE SLOPE.

TYPICAL FLAT BOTTOM DITCH (FB) DETAIL

NTS — 1 G0012 — REF G0005 G0007

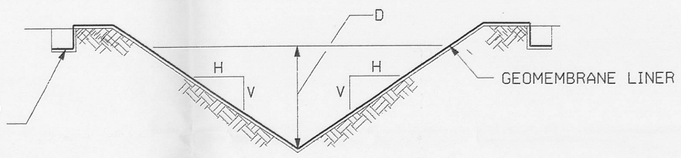

NOTE:

1. SEE DITCH SCHEDULE FOR CHANNEL LINING, DEPTH (D), HORIZONTAL (H) AND VERTICAL (V) COMPONENT OF DITCH SIDE SLOPE.

TYPICAL V-DITCH DETAIL

NTS — 2 G0012 — REF G0005 G0007 G0008

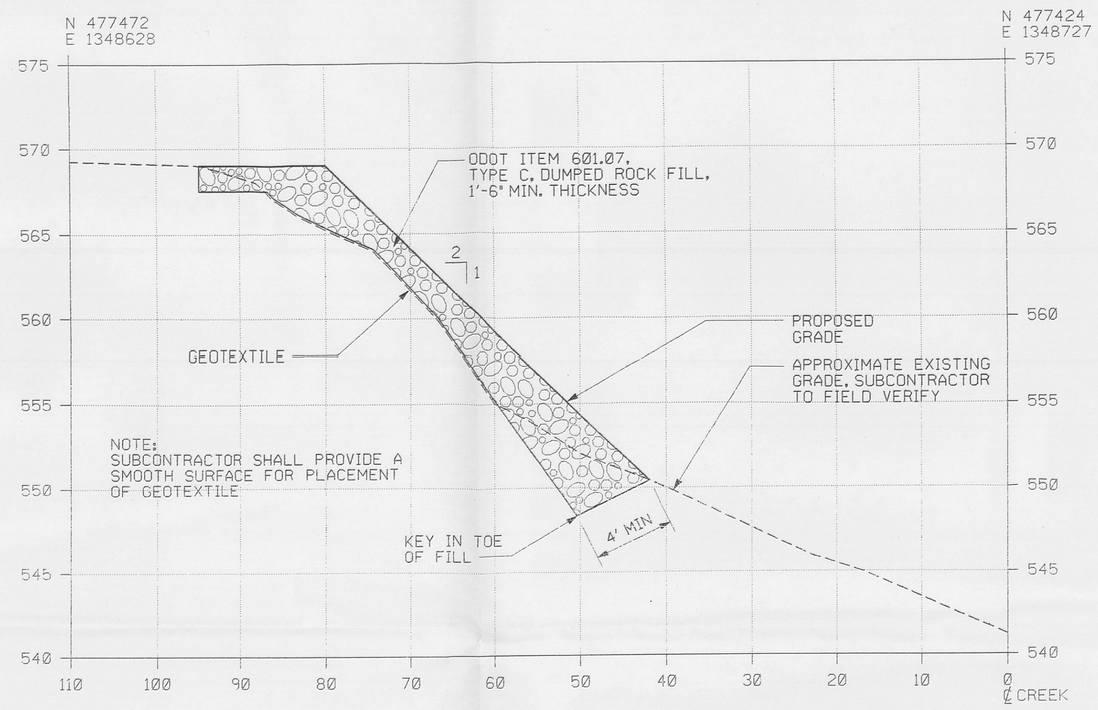

NOTE:
SEE SHEET G0005 FOR PLAN VIEW EXTENT OF SWALE REPAIR.

SWALE REPAIR SECTION

A — G0012 — REF G0005

HORIZ 1"=10'
VERT 1"=5'

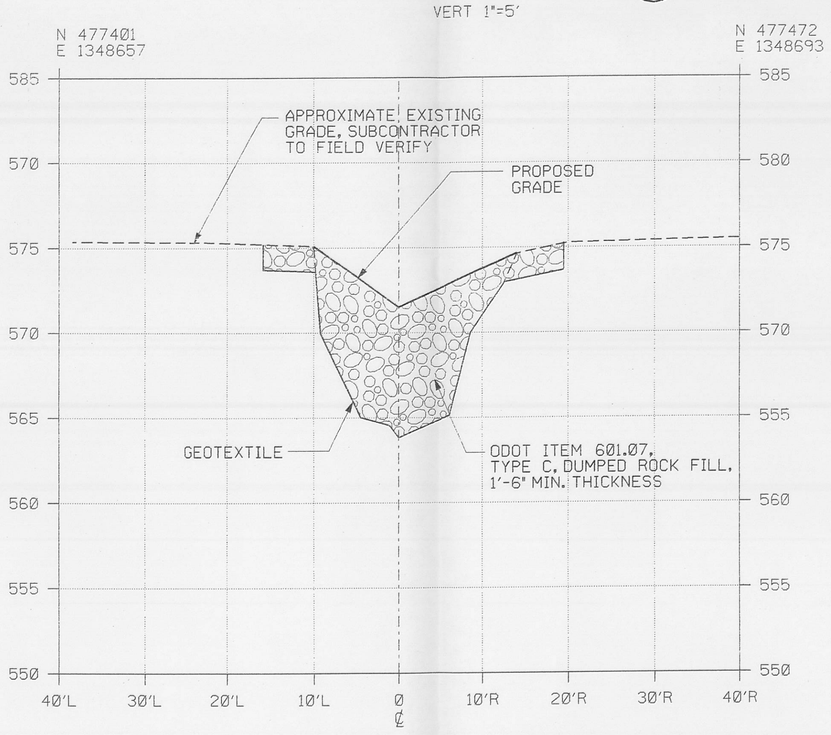

SWALE REPAIR SECTION

B — G0012 — REF G0005

HORIZ 1"=10'
VERT 1"=5'

DITCH SCHEDULE

DITCH NO.	MIN. DEPTH (D) FT	BOTTOM WIDTH (W) FT	SIDE SLOPE HORIZONTAL (H)	SIDE SLOPE VERTICAL (V)	UPSTREAM INVERT (±)	DOWNSTREAM INVERT (±)	SLOPE (%)	DITCH LINING	DISPOSITION OF EXCAVATED MATERIAL (STOCKPILE)
D-1	1.5	N/A, V-DITCH	2.0	1.0	577.0	568.0	0.5 MIN 2.6 MAX	EROSION CONTROL BLANKET	IMPACTED
D-2A	1.5	N/A, V-DITCH	2.0	1.0	545.0	540.4	10.0 MAX	O.D.O.T. TYPE "C" DUMPED ROCK FILL	IMPACTED
D-2B	1.5	N/A, V-DITCH	2.0	1.0	540.4	538.0	0.8	GEOMEMBRANE LINER	IMPACTED
D-3	1.5	BEGIN DITCH WITH W=4', TRANSITION TO W=8'	2.0	1.0	540.4	537.0	0.7	GEOMEMBRANE LINER	IMPACTED
D-4	1.0	2.0	2.0	1.0	540.0	537.0	0.9	GEOMEMBRANE LINER	IMPACTED
D-5	1.0	2.0	2.0	1.0	539.0	534.6	1.5	GEOMEMBRANE LINER	IMPACTED
D-6	1.0	2.0	2.0	1.0	538.0	534.6	1.4	GEOMEMBRANE LINER	IMPACTED
D-7	2.0	2.0	2.0	1.0	540.0	534.0	1.1 MIN 2.9 MAX	GEOMEMBRANE LINER	IMPACTED
D-8A	0.75	N/A, V-DITCH	2.0	1.0	573.33	569.0	0.8	EROSION CONTROL BLANKET	IMPACTED
D-8B	1.0	N/A, V-DITCH	2.0	1.0	569.0	544.0	10.0 MAX	O.D.O.T. TYPE "C" DUMPED ROCK FILL	IMPACTED
D-9	2.0	4.0	2.0	1.0	549.0	542.0	1.1 MIN 6.7 MAX	GEOMEMBRANE LINER	IMPACTED
D-10A	1.0	N/A, V-DITCH	2.0	1.0	575.0	569.0	4.3	EROSION CONTROL BLANKET	IMPACTED
D-10B	1.0	N/A, V-DITCH	2.0	1.0	569.0	547.0	20.0	O.D.O.T. TYPE "C" DUMPED ROCK FILL	IMPACTED
D-11	1.0	N/A, V-DITCH	2.0	1.0	572.0	566.0	2.6 MIN 4.0 MAX	EROSION CONTROL BLANKET, ROCK CHECK DAM	IMPACTED
D-12	1.5	2.0	2.0	1.0	573.0	565.0	1.4	EROSION CONTROL BLANKET	USE FOR DEVELOPMENT OF NON IMPACTED MATERIAL STOCKPILE #2. REMAINDER-IMPACTED
D-13	1.5	2.0	3.0	1.0	565.0	563.9	1.0 MIN 5.5 MAX	EROSION CONTROL BLANKET	TOP FOOT IMPACTED, BALANCE REMAINING IN WHEEL WASH AREA
D-14	1.5	2.0	3.0	1.0	MEET EXIST	563.9	0.8	EROSION CONTROL BLANKET	TOP FOOT IMPACTED, BALANCE REMAINING IN WHEEL WASH AREA
D-15	1.0	N/A, V-DITCH	2.0	1.0	575.0	568.5	2.5 MIN 3.0 MAX	EROSION CONTROL BLANKET	IMPACTED
BA1	2.0	N/A, V-DITCH	2.0	1.0	585.0	582.0	0.8	EROSION CONTROL BLANKET	USE AS INFILTRATION BARRIER OR KEEP WITHIN BORROW AREA
BA2	1.0	N/A, V-DITCH	2.0	1.0	578.0	575.0	0.8	EROSION CONTROL BLANKET	USE AS INFILTRATION BARRIER OR KEEP WITHIN BORROW AREA

GENERAL NOTES FOR EROSION AND SEDIMENT CONTROLS

1. RETENTION BASINS AND PERIMETER SEDIMENT CONTROLS SHALL BE IN PLACE AND FUNCTIONING PRIOR TO INITIATING EXCAVATION ACTIVITIES.
2. DISTURBED AREAS WHICH WILL REMAIN UNWORKED FOR A PERIOD OF 45 DAYS OR GREATER SHALL BE STABILIZED WITH SEED AND MULCH WITHIN SEVEN DAYS. SEE SPECIFICATION SECTION 02900.
3. UNLESS OTHERWISE INDICATED ON CONSTRUCTION DRAWINGS AND SPECIFICATIONS, ALL VEGETATIVE AND STRUCTURAL EROSION AND SEDIMENT CONTROL PRACTICES SHALL BE CONSTRUCTED AND MAINTAINED CONSISTENT WITH THE MINIMUM STANDARDS AND SPECIFICATIONS OF THE RAINWATER AND LAND DEVELOPMENT, OHIO'S STANDARDS FOR STORMWATER MANAGEMENT, LAND DEVELOPMENT AND URBAN STREAM PROTECTION, 2ND EDITION, 1996, AND THE STATE OF OHIO, DEPARTMENT OF TRANSPORTATION, CONSTRUCTION AND MATERIAL SPECIFICATIONS, JANUARY 1, 1995. RAINWATER MANUAL WILL TAKE PRECEDENCE OVER ODOT SPECS UNLESS DIRECTED OTHERWISE BY FDF.
4. ALL WOODED AREAS WITHIN LIMIT OF WORK SHALL BE CLEARED. TREES WILL BE CUT ONE FOOT ABOVE GROUND. THE TREES WILL BE CHIPPED AND STORED IN THE WOODCHIP STOCKPILE AREA.
5. STUMPS AND ENTIRE ROOT MASS ENCOUNTERED IN THE RETENTION BASIN WILL BE GROUND IN PLACE, MIXED WITH IMPACTED MATERIAL, AND TRANSPORTED TO THE IMPACTED MATERIAL STOCKPILE (SEE SPECIFICATIONS).
6. A COPY OF THE APPROVED SURFACE WATER MANAGEMENT PLAN SHALL BE MAINTAINED ON THE SITE AT ALL TIMES.
7. THE SUBCONTRACTOR IS RESPONSIBLE FOR INSTALLATION OF ANY ADDITIONAL TEMPORARY EROSION CONTROL MEASURES NECESSARY TO PREVENT EROSION AND SEDIMENTATION.
8. DISTURBED AREAS ARE TO DRAIN TO APPROVED SEDIMENT CONTROL MEASURES AT ALL TIMES DURING LAND DISTURBING ACTIVITIES THROUGHOUT THE DURATION OF THE CONTRACT.
9. INSPECT ALL EROSION AND SEDIMENT CONTROL MEASURES WEEKLY AND AFTER EACH RUNOFF-PRODUCING RAINFALL EVENT OF 0.5" OR GREATER. ANY NECESSARY REPAIRS OR CLEANUP TO MAINTAIN THE EFFECTIVENESS OF EROSION CONTROL DEVICES SHALL BE MADE IMMEDIATELY.
10. SEDIMENT CLEANOUT ELEVATIONS FOR EACH RETENTION BASIN ARE INDICATED ON THE DETAILS. THE SEDIMENT CLEANOUT ELEVATIONS SHALL BE INDICATED IN THE FIELD BY A FLOURESCENT ORANGE PAINTED RING ON THE RISER. ONCE ACCUMULATED SEDIMENTS REACH THE ESTABLISHED SEDIMENT CLEANOUT ELEVATIONS, THE SEDIMENTS SHALL BE REMOVED AND DISPOSED IN THE IMPACTED MATERIAL STOCKPILE.

GENERALIZED SEQUENCE OF CONSTRUCTION FOR EROSION AND SEDIMENT CONTROLS, (UNLESS OTHERWISE DIRECTED)

STEP 1. INSTALL SILT FENCE AND DIVERSION DITCHES/BERMS IN LOCATIONS INDICATED ON THE PLAN AND AS SHOWN IN THE DETAILS.

STEP 2. STRIP TOP TWELVE INCHES OF SOIL FROM AREAS DESIGNATED FOR RETENTION BASIN CONSTRUCTION AND PLACE IN THE IMPACTED MATERIAL STOCKPILE.

STEP 3. EXCAVATE RETENTION BASINS. PLACE EXCAVATED MATERIAL IN NON-IMPACTED MATERIAL STOCKPILE.

STEP 4. INSTALL RISERS, BARRELS, AND LIFT STATIONS.

STEP 5. CONSTRUCT GEOMEMBRANE LINER IN THE RETENTION BASINS.

STEP 6. DIVERT FLOW INTO THE RETENTION BASINS BY CONSTRUCTING COLLECTION DITCHES.

STEP 7. BEGIN OPERATION OF RETENTION BASINS AND LIFT STATIONS AND CONTINUE UNTIL COMPLETION OF EXCAVATION.

STATE OF OHIO — FRANKLIN M. PARTON, JR. NO. E-57814 — REGISTERED PROFESSIONAL ENGINEER — 6/27/97

NOTES

RELATED DWG NO.	DRAWING TITLE	SHEET NO.
92X-5900-X-00320	DRAWING INDEX	X0002
92X-5900-X-00321	LEGEND AND GENERAL NOTES	X0003
92X-5900-G-00282	SITE PLAN	G0005
92X-5900-G-00283	SITE PLAN - WHEEL WASH AREA	G0007
92X-5900-G-00390	SITE PLAN - PADDYS RUN AREA	G0008

000015

REV. NO.	ISSUE OR REVISION PURPOSE - DESCRIPTION	A-E	FERMCO	DATE
1	REVISED DITCH D1 AND D12 SLOPES AND NOTE 9 PER DCN: 20401-005	JMU	N/A	8/27/97
0	CERTIFIED FOR CONSTRUCTION	JMU	N/A	6/13/97

INITIALS AND DATE

UNITED STATES DEPARTMENT OF ENERGY
FERNALD ENVIRONMENTAL MANAGEMENT PROJECT

THIS DRAWING PREPARED BY
PARSONS
THE RALPH M. PARSONS CO. - PARSONS MAIN, INC. - ENGINEERING-SCIENCE, INC.
CINCINNATI, OHIO

PROJECT NAME
WASTE UNIT REMEDIATION
SOUTHERN WASTE UNITS - SITE PREPARATION PACKAGE

DRAWING TITLE
CIVIL
EROSION AND SEDIMENT CONTROL
SHEET 1 OF 2

DRAWN BY	DATE	LEAD ENGINEER	DATE	CHECKED BY	DATE
D. REED	11/18/96	F.M. PARTON, JR.	6/12/97	K. GERARD	01/18/97

PLANT/BLDG. NO.	FLOOR	SCALE	CLASS
		NONE	

SUBMITTED FOR APPROVAL	FERMCO CRU APPROVAL	FERMCO PROJECT NO.
J.M. USHER 6/13/97	N/A	20400

A-E DATE — DATE

PREPARED UNDER PARSONS PROJECT ORDER NUMBER	DOE PROJECT NO.	TEMP PROJECT NO.	DRAWING INDEX CODE NO.	SHEET NO.	REV. NO.
SCEP/P0165		WBS 1.1.1.1.2.3.6 00-90701	92X-5900-G-00311	G0012	1

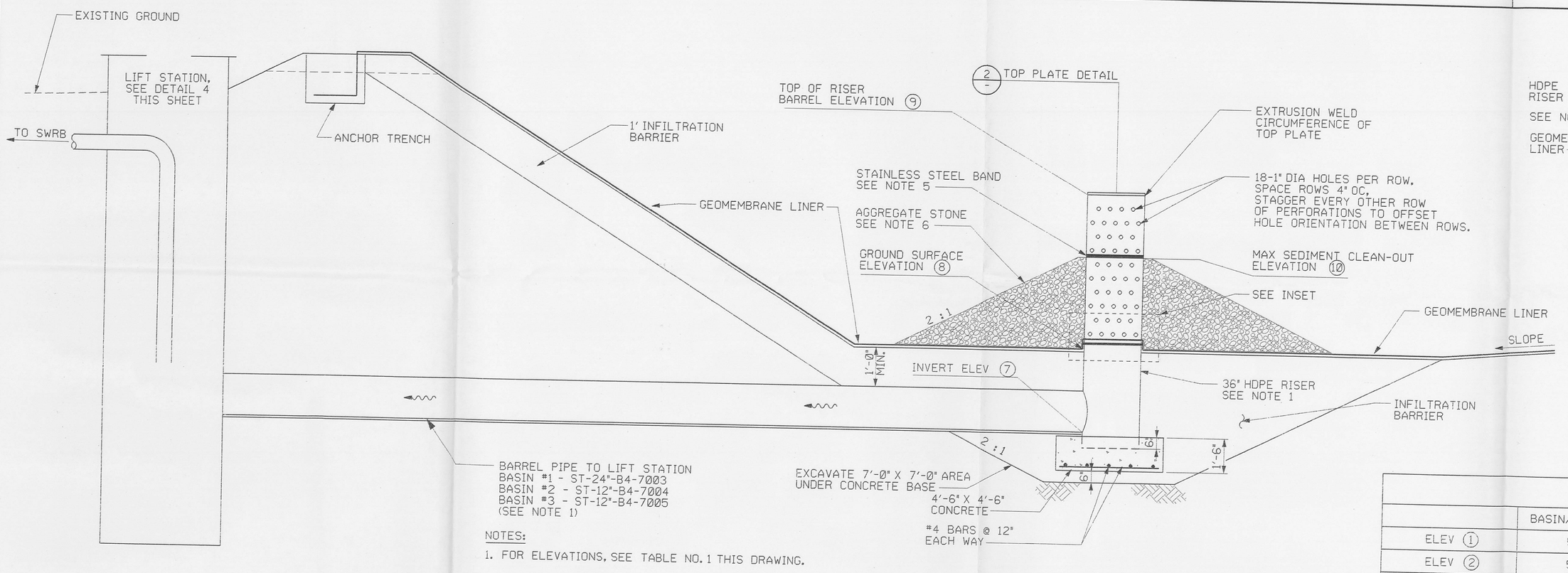

NOTES:

1. FOR ELEVATIONS, SEE TABLE NO. 1 THIS DRAWING.

SIDE VIEW

RISER PIPE DETAIL (1) G0013 — NTS — REF G0009 G0010 G0011

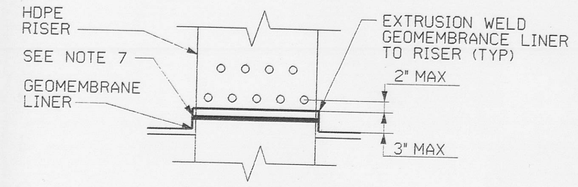

INSET

TABLE NO. 1			
	BASIN/LIFT STA 1	BASIN/LIFT STA 2	BASIN/LIFT STA 3
ELEV (1)	541.00	539.00	541.00
ELEV (2)	525.00	523.00	527.50
ELEV (3)	528.00	526.00	530.00
ELEV (4)	537.00	535.00	537.00
ELEV (5)	530.00	528.00	532.00
ELEV (6)	527.00	525.00	529.00
ELEV (7)	528.40	526.70	530.50
ELEV (8)	531.40	528.70	532.50
ELEV (9)	535.20	532.60	536.80
ELEV (10)	532.90	530.30	534.20
FORCE MAIN PIPE TO SWRB	6" CARRIER 10" CONTAINMENT	3" CARRIER 6" CONTAINMENT	3" CARRIER 6" CONTAINMENT

NOTES

1. BARREL AND RISER PIPES SHALL BE HDPE SDR-21.
2. VALVE AND PIPE ASSEMBLY ABOVE PUMP IS TO BE INSTALLED TO PERMIT UNOBSTRUCTED REMOVAL OF PUMP ON GUIDE CABLE ASSEMBLY.
3. HOOK ANCHORED TO CONCRETE WITH ½"X4" BOLTS. USE ¼" DIA GRADE 60 ALLOY CHAIN, RATED FOR LIFTING. SECURE TO PUMP AS PER MANUFACTURER'S INSTRUCTIONS.
4. CONNECT HDPE PIPE TO HDPE MANHOLE USING EXTRUSION WELD, BAND, ETC., AS RECOMMENDED BY THE HDPE MANHOLE MANUFACTURER.
5. INSTALL ½" STAINLESS STEEL BAND AROUND RISER AT SEDIMENT CLEANOUT ELEVATION. BAND SHALL BE PAINTED FLUORESCENT ORANGE. SUBCONTRACTOR SHALL REMOVE SEDIMENTS WHEN BUILD-UP REACHES BOTTOM OF PAINTED BAND.
6. PLACE AGGREGATE STONE UP TO MAXIMUM SEDIMENT CLEAN-OUT ELEVATION. STONE SHALL BE NO. 1 STONE WITH THE FRACTION SMALLER THAN 2" REMOVED. MATERIAL SHALL CONFORM TO ODOT ITEMS 601, 703.01 AND 703.04. (1)
7. INSTALL ½" STAINLESS STEEL BAND AROUND RISER BELOW EXTRUSION WELD

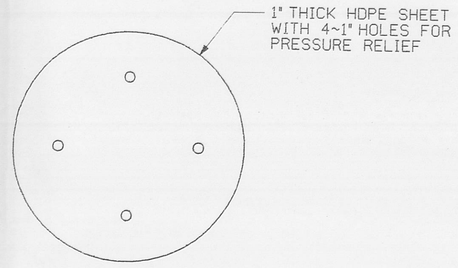

TOP PLATE DETAIL (2) G0013 — NTS

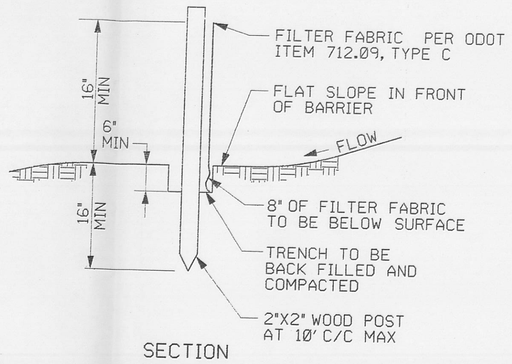

SECTION

NOTE:

1. DETAIL FOR JOINING SECTIONS OF SILT FENCE SHALL BE IN ACCORDANCE WITH RAINWATER AND LAND DEVELOPMENT, OHIO STANDARDS FOR STORMWATER MANAGEMENT, LAND DEVELOPMENT AND URBAN STREAM PROTECTION, 2ND EDITION, 1996.
2. REMOVE SEDIMENT AND RESTORE TO ORIGINAL CONDITION WHEN SEDIMENT DEPTH REACHES ONE-HALF FENCE HEIGHT, OR SOONER IF ACCUMULATED SEDIMENT PREVENTS PROPER PERFORMANCE OF SILT FENCE.

SILT FENCE DETAIL (3) G0013 — NTS — REF G0005

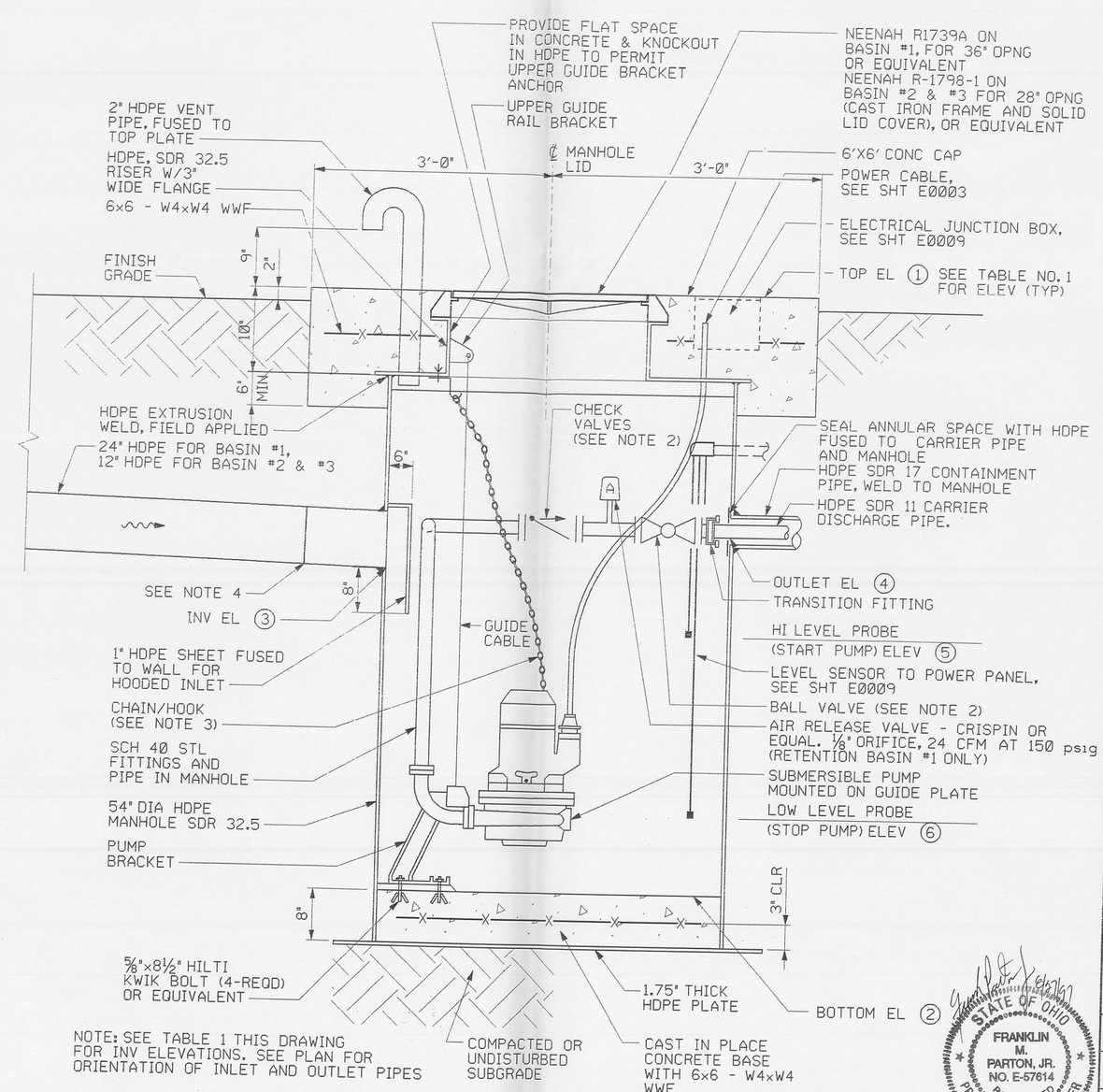

NOTE: SEE TABLE 1 THIS DRAWING FOR INV ELEVATIONS. SEE PLAN FOR ORIENTATION OF INLET AND OUTLET PIPES

LIFT STATION DETAIL (4) G0013 — NTS — REF G0009 G0010 G0011

RELATED DWG NO.	DRAWING TITLE	SHEET NO.
92X-5900-X-00320	DRAWING INDEX	X0002
92X-5900-X-00321	LEGEND AND GENERAL NOTES	X0003
92X-5900-G-00303	ENLARGEMENT RETENSION BASIN #1	G0009
92X-5900-G-00371	ENLARGEMENT RETENSION BASIN #2	G0010
92X-5900-G-00372	ENLARGEMENT RETENSION BASIN #3	G0011
92X-5900-E-00377	SINGLE LINE DIAGRAMS/ELEVATIONS LIFT STATION NO. 1, 2 AND 3	E0003
92X-5900-E-00382	DETAILS - SHEET 1	E0009

000016

REV. NO.	ISSUE OR REVISION PURPOSE - DESCRIPTION	A-E	FERMCO	DATE
1	REVISED NOTE 6 PER DCN: 20401-005	JMU	N/A	8/27/97
0	CERTIFIED FOR CONSTRUCTION	JMU	N/A	6/13/97

INITIALS AND DATE

UNITED STATES DEPARTMENT OF ENERGY
FERNALD ENVIRONMENTAL MANAGEMENT PROJECT

THIS DRAWING PREPARED BY
PARSONS
THE RALPH M. PARSONS CO. - PARSONS MAIN, INC. - ENGINEERING-SCIENCE, INC.
CINCINNATI, OHIO

PROJECT NAME
WASTE UNITS REMEDIATION
SOUTHERN WASTE UNITS - SITE PREPARATION PACKAGE

DRAWING TITLE
CIVIL
EROSION AND SEDIMENT CONTROL
SHEET 2 OF 2

DRAWN BY	DATE	LEAD ENGINEER	DATE	CHECKED BY	DATE
K.L. RABBITT	10/16/96	F.M. PARTON, JR.	6/12/97	K. GERARD	01/18/97

PLANT/BLDG. NO.	FLOOR	SCALE	CLASS
		NONE	

SUBMITTED FOR APPROVAL	FERMCO CRU APPROVAL	FERMCO PROJECT NO.
J.M. USHER 6/13/97	N/A	20400
A-E DATE	DATE	

DOE PROJECT NO.	FEMP PROJECT NO.	DRAWING INDEX CODE NO.	SHEET NO.	REV. NO.
	WBS 1.1.1.1.2.3.6 00-90701	92X-5900-G-00368	G0013	1

PREPARED UNDER PARSONS PROJECT ORDER NUMBER: SCEP/P0165

STATE OF OHIO — FRANKLIN M. PARTON, JR. NO. E-57614 — REGISTERED PROFESSIONAL ENGINEER

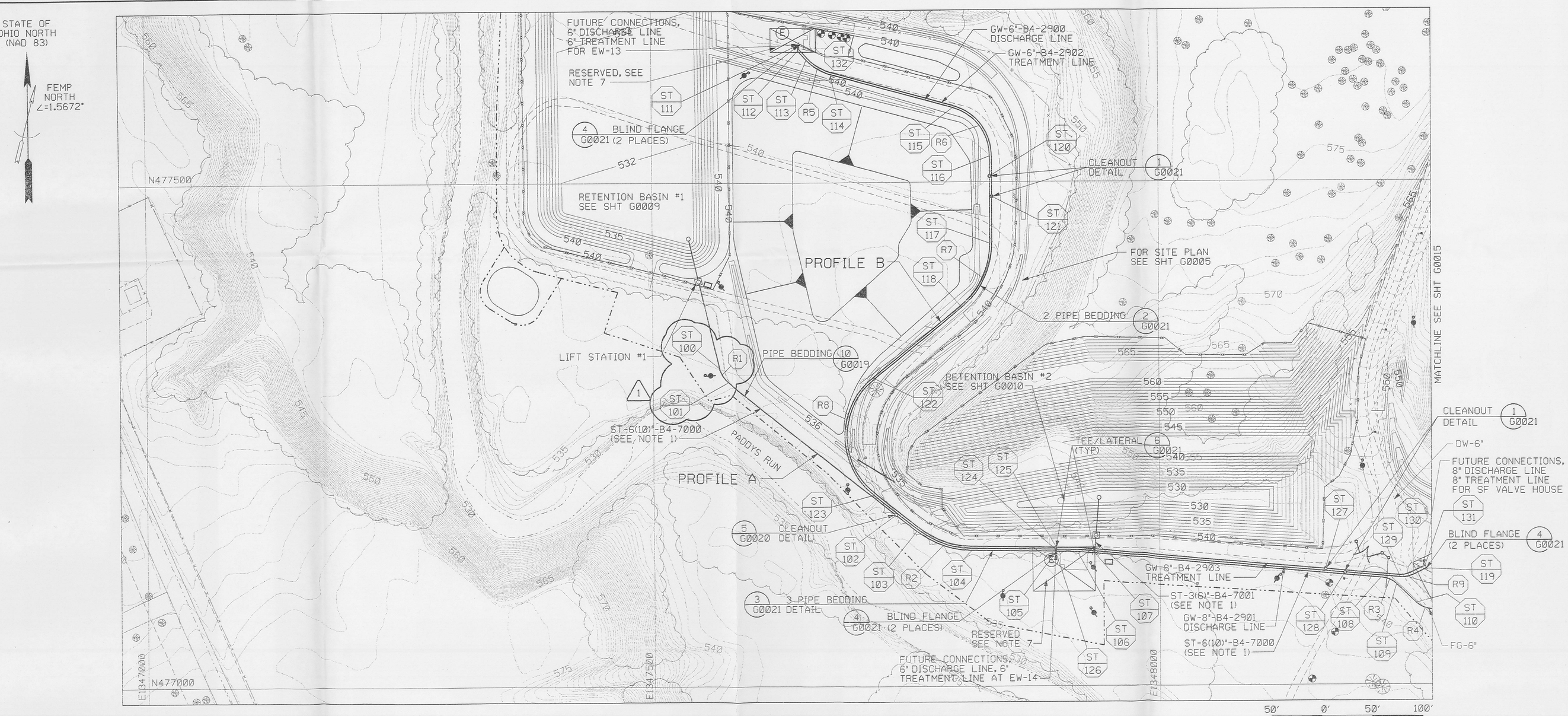

PLAN (1) G0014
SCALE: 1"=50'

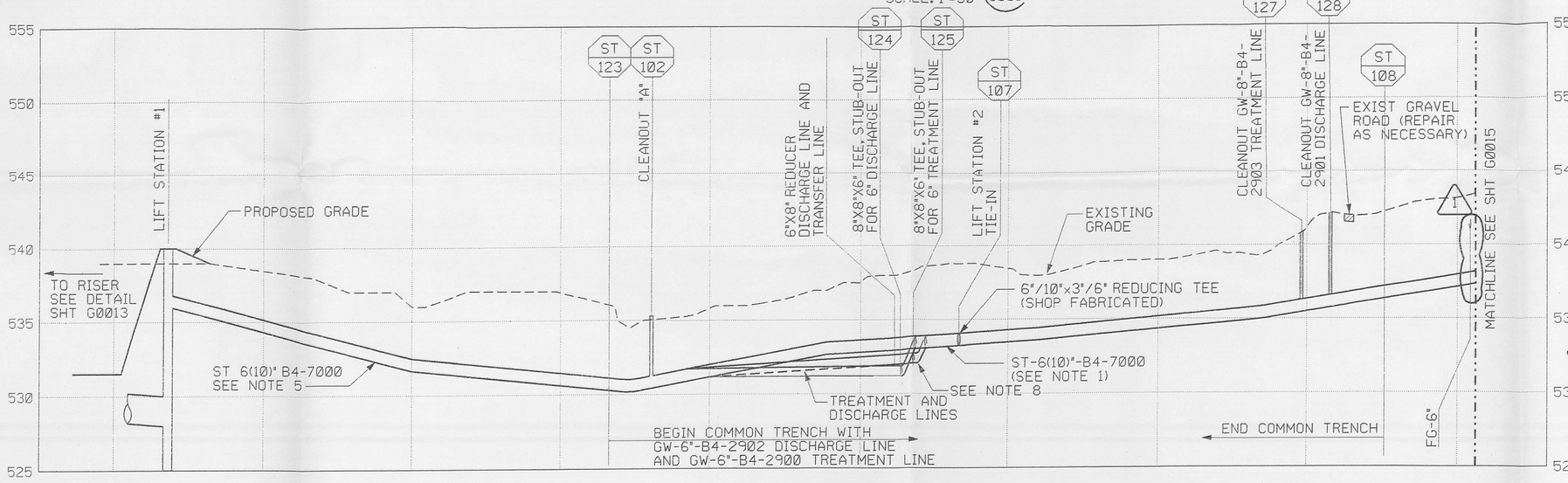

PROFILE (A) G0014
SCALE: HOR 1"=50' VER 1"=5'

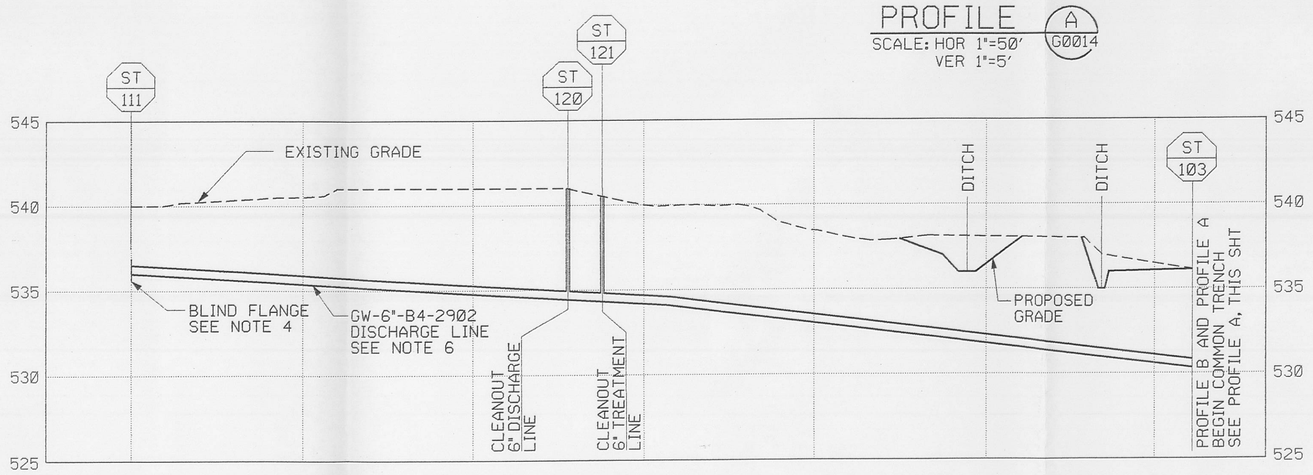

PROFILE (B) G0014
SCALE: HOR 1"=50' VER 1"=5'

5' 0' 5' 10'
PROFILE GRAPHIC SCALE: 1"=5' VERTICAL
50' 0' 50' 100'
PROFILE GRAPHIC SCALE: 1"=50' HORIZONTAL

STATE OF OHIO FRANKLIN M. PARTON, JR. NO. E-57614 REGISTERED PROFESSIONAL ENGINEER

NOTES

1. FOR TRANSFER LINE, USE HDPE SDR 11 FOR 3" AND 6" CARRIER PIPES AND SDR 21 FOR 6" AND 10" CONTAINMENT PIPES. ALL FITTINGS ARE TO BE MOLDED UNLESS NOTED OTHERWISE.
2. ALL HDPE VERTICAL ALIGNMENT IS TO BE MET USING A MINIMUM 20' RADIUS BEND OR IN ACCORDANCE WITH MANUFACTURER'S RECOMMENDATION. MAINTAIN 42" MINIMUM COVER OVER TOP OF PIPE.
3. THE LOCATION AND ELEVATION OF EXISTING UNDERGROUND UTILITIES ARE APPROXIMATE. FIELD VERIFY PRIOR TO CONSTRUCTION.
4. INSTALL BLIND FLANGE ON DISCHARGE AND TREATMENT LINES AT LOCATIONS SHOWN. AT EACH BLIND FLANGE INSTALL UTILITY MARKER. UTILITY MARKER SHALL BE A MIN. 3.5" WIDE, 6' LONG WITH A MIN. 3' INSTALLED ABOVE GRADE, YELLOW IN COLOR WITH THE WORDS DISCHARGE LINE OR TREATMENT LINE WRITTEN IN BLACK LETTERS. UTILITY MARKERS SHALL BE CARSONITE INTERNATIONAL, OR EQUAL AS A MINIMUM.
5. LOCATION GIVEN FOR ST-6(10)"-B4-7000 TRANSFER LINE. GW-DISCHARGE LINE AND GW-TREATMENT LINE ARE LOCATED IN SAME TRENCH, UNLESS OTHERWISE NOTED.
6. LOCATION GIVEN FOR GW-6"-B4-2902 DISCHARGE LINE. GW-6"-B4-2900 TREATMENT LINE IS LOCATED IN SAME TRENCH, UNLESS OTHERWISE NOTED.
7. AREAS RESERVED FOR FUTURE PROJECTS BY OTHERS EXCEPT FOR INSTALLATION OF OVERHEAD ELECTRIC AND UNDERGROUND UTILITIES. MAINTAIN AND ALLOW ACCESS TO THESE AREAS DURING CONSTRUCTION.
8. PIPE TO ALWAYS SLOPE FROM LOW POINTS TO AIR RELEASE VALVES AT THE HIGH POINTS. AVOID INTERMEDIATE HIGH POINTS. FIELD ADJUST AIR RELEASE VALVES TO ENSURE THEY ARE AT THE HIGH POINT IN THE LINE.

CENTERLINE CURVE DATA

CURVE	RADIUS	LENGTH	DELTA	TANGENT
R1	25.00'	16.76'	38°28'05"	8.72'
R2	90.00'	58.58'	37°18'37"	30.38'
R3	25.00'	17.02'	38°26'29"	8.72'
R4	25.00'	34.97'	80°07'29"	21.02'
R5	50.00'	27.69'	31°46'03"	14.22'
R6	50.00'	64.80'	74°18'13"	37.88'
R7	80.00'	70.94'	50°49'44"	38.01'
R8	75.00'	133.80'	102°15'50"	93.05'
R9	25.00'	13.60'	31°11'38"	6.98'

UNDERGROUND UTILITY COORDINATES (ST)

POINT	NORTHING	EASTING	DESCRIPTION
100	477316.2	1347565.7	BEGIN RADIUS, R1
101	477302.2	1347574.5	END RADIUS, R1
102	477170.2	1347739.9	CLEANOUT "A"
103	477153.8	1347760.6	BEGIN RADIUS, R2
104	477134.6	1347814.9	END RADIUS, R2
105	477131.0	1347897.1	BLIND FLANGE, ELEV. 535 ±
106	477133.0	1347918.7	ANGLE POINT, TRANSFER LINE
107	477131.5	1347935.5	REDUCING TEE
108	477105.7	1348218.7	BEGIN RADIUS, R3
109	477099.0	1348234.0	END RADIUS, R3
110	477080.8	1348253.4	BEGIN RADIUS, R4
111	477636.9	1347646.6	BLIND FLANGE, ELEV. 539 ±
112	477631.0	1347646.3	ANGLE POINT, DISCHARGE LINE
113	477621.8	1347654.8	BEGIN RADIUS, R5
114	477607.5	1347678.1	END RADIUS, R5
115	477573.8	1347798.0	BEGIN RADIUS, R6
116	477525.7	1347834.4	END RADIUS, R6
117	477439.2	1347834.4	BEGIN RADIUS, R7
118	477377.2	1347805.0	END RADIUS, R7
119	477114.8	1348263.5	BLIND FLANGE, ELEV. 540 ±
120	477505.7	1347834.4	CLEANOUT, DISCHARGE LINE
121	477485.7	1347836.4	CLEANOUT, TREATMENT LINE
122	477306.4	1347718.2	BEGIN RADIUS, R8
123	477189.7	1347718.8	END RADIUS, R8
124	477135.4	1347897.1	8"x8"x6" TEE, 8" DISCHARGE LINE
125	477137.3	1347898.2	8"x8"x6" TEE, 8" TREATMENT LINE
126	477131.0	1347898.1	BLIND FLANGE, ELEV. 535 ±
127	477114.7	1348164.1	CLEANOUT, TREATMENT LINE
128	477111.0	1348183.3	CLEANOUT, DISCHARGE LINE
129	477106.0	1348237.4	BEGIN RADIUS, R9
130	477108.5	1348250.6	END RADIUS, R9
131	477117.4	1348262.2	BLIND FLANGE, ELEV. 540 ±
132	477636.8	1347647.7	BLIND FLANGE, ELEV. 539 ±

RELATED DWG NO.	DRAWING TITLE	SHEET NO.
92X-5900-X-00320	DRAWING INDEX	X0002
92X-5900-X-00321	LEGEND AND GENERAL NOTES	X0003
92X-5900-G-00282	SITE PLAN	G0005
92X-5900-G-00303	ENLARGEMENT RETENTION BASIN #1	G0009
92X-5900-G-00371	ENLARGEMENT RETENTION BASIN #2	G0010
92X-5900-G-00368	EROSION AND SEDIMENT CONTROL - SHEET 2 OF 2	G0013
92X-5900-G-00305	TRANSFER LINE - PLAN AND PROFILE - SHEET 2 OF 3	G0015
92X-5900-G-00307	WATER LINE DETAILS	G0019
92X-5900-G-00309	MISCELLANEOUS DETAILS SHEET 1 OF 3	G0020
92X-5900-G-00308	MISCELLANEOUS DETAILS SHEET 2 OF 3	G0021

000017

REV. NO.	ISSUE OR REVISION PURPOSE - DESCRIPTION	A-E	FERMCO	DATE
1	REVISED PROFILE GRAPHIC SCALES, REMOVED DW-6" LINE, ADDED FG-6" PER DCN: 20401-005	JMU	N/A	8/27/97
	CURVE DATA FOR R1, R5, R6 AND COORDINATE FOR POINTS 100 AND 101.			
0	CERTIFIED FOR CONSTRUCTION	JMU	N/A	6/13/97

INITIALS AND DATE

UNITED STATES DEPARTMENT OF ENERGY
FERNALD ENVIRONMENTAL MANAGEMENT PROJECT

THIS DRAWING PREPARED BY
PARSONS
THE RALPH M. PARSONS CO. - PARSONS MAIN, INC. - ENGINEERING-SCIENCE, INC.
CINCINNATI, OHIO

PROJECT NAME
WASTE UNITS REMEDIATION
SOUTHERN WASTE UNITS - SITE PREPARATION PACKAGE

DRAWING TITLE
CIVIL
TRANSFER LINE - PLAN AND PROFILE
SHEET 1 OF 3

DRAWN BY	DATE	LEAD ENGINEER	DATE	CHECKED BY	DATE
R. LINDGREN	06/12/96	F.M. PARTON, JR.	6/12/97	K. GERARD	01/18/97

PLANT/BLDG. NO.	FLOOR	SCALE	CLASS
		1"=50'	

SUBMITTED FOR APPROVAL	FERMCO CRU APPROVAL	FERMCO PROJECT NO.
J.M. USHER 6/13/97	N/A	20400

PREPARED UNDER PARSONS PROJECT ORDER NUMBER	A-E DOE PROJECT NO.	DATE	FEMP PROJECT NO.	DATE	DRAWING INDEX CODE NO.	SHEET NO.	REV. NO.
SCEP/P0165	.		WBS 1.1.1.1.2.3.6 00-90701		92X-5900-G-00304	G0014	1

PLAN (1 / G0015)
SCALE: 1"=50'
GRAPHIC SCALE: 1"=50'

UNDERGROUND UTILITY COORDINATES (ST)			
POINT	NORTHING	EASTING	DESCRIPTION
200	477079.0	1348285.6	END RADIUS, R4
201	477094.3	1348305.8	BEGIN RADIUS, R11
202	477095.9	1348333.3	END RADIUS, R11
203	477092.0	1348340.1	AIR RELEASE #1
204	477130.1	1348305.7	ANGLE POINT, DISCHARGE LINE
205	477126.1	1348297.5	BLIND FLANGE, ELEV 540 ±
206	477080.6	1348344.1	BLIND FLANGE, ELEV 540 ±
207	477048.7	1348342.8	BLIND FLANGE, ELEV 540 ±
208	477032.3	1348443.9	BEGIN RADIUS, R12
209	477029.0	1348455.6	END RADIUS, R12
210	477028.6	1348469.0	REDUCING TEE, TRANSFER LINE
211	477026.2	1348554.3	CLEANOUT "B"
212	477025.3	1348587.2	BEGIN RADIUS, R13
213	477039.5	1348610.4	END RADIUS, R13
214	477021.9	1348636.0	BEGIN RADIUS, R19
215	477207.6	1348691.5	BEGIN RADIUS, R14
216	477231.8	1348699.5	END RADIUS, R14
217	477264.9	1348706.0	BEGIN RADIUS, R15
218	477328.8	1348697.3	END RADIUS, R15
219	477385.9	1348668.7	AIR RELEASE #2
220	477441.7	1348625.2	ANGLE POINT, TRANSFER LINE
221	477496.1	1348514.6	ANGLE POINT, DISCHARGE LINE
222	477493.6	1348505.5	BEGIN RADIUS, R16
223	477494.6	1348481.1	END RADIUS, R16
224	477544.4	1348345.3	ANGLE POINT, DISCHARGE LINE
225	477550.9	1348347.7	BLIND FLANGE, ELEV 569 ±
226	477537.3	1348370.5	BEGIN RADIUS, R17
227	477542.7	1348433.7	END RADIUS, R17
228	477504.5	1348514.5	BEGIN RADIUS, R18
229	477591.4	1348514.2	END RADIUS, R18
230	477596.4	1348522.8	CLEANOUT "C"
231	477689.4	1348684.3	ANGLE POINT, TRANSFER LINE
232	477022.7	1348610.0	20"X20"X8" TEE, DISCHARGE LINE
233	477123.4	1348298.8	BLIND FLANGE, ELEV 540 ±
234	477085.7	1348347.1	20"×20"×6" TEE, DISCHARGE LINE
235	477082.5	1348348.6	16"×16"×6" TEE, TREATMENT LINE
236	477079.1	1348346.6	BLIND FLANGE, ELEV 540 ±
237	477078.4	1348359.9	20"×20"×6" TEE, DISCHARGE LINE
238	477075.6	1348360.6	16"×16"×6" TEE, TREATMENT LINE
239	477047.7	1348344.5	BLIND FLANGE, ELEV 540 ±
240	477013.4	1348678.0	END RADIUS, R19-BEGIN RADIUS, R20
241	477388.7	1348669.1	8"×8"×1" TEE, DISCHARGE LINE
242	477504.2	1348519.2	8"×8"×6" TEE, DISCHARGE LINE
243	477551.8	1348345.1	BLIND FLANGE, ELEV 569 ±
244	477089.3	1348340.9	20"×20"×1" TEE, DISCHARGE LINE
245	477086.6	1348341.6	16"×16"×1" TEE, TREATMENT LINE
246	477618.8	1348561.8	AIR RELEASE #3
247	477616.4	1348565.6	6"×6"×1" TEE, TREATMENT LINE
248	477619.1	1348566.3	6"×6"×1" TEE, DISCHARGE LINE
249	477010.7	1348689.8	END RADIUS, R20-BEGIN RADIUS, R21
250	477009.3	1348697.9	END RADIUS, R21-BLIND FLANGE 535 ±
251	477011.5	1348677.4	BEGIN RADIUS, R22-CLEANOUT TEE
252	477008.2	1348684.0	END RADIUS, R22-BEGIN RADIUS, R23
253	477003.7	1348694.0	END RADIUS, R23-BLIND FLANGE 535 ±
254	477022.1	1348630.9	CLEANOUT TEE
255	477547.2	1348343.4	8"×8"×6" TEE

NOTES

1. FOR TRANSFER LINE, USE HDPE SDR 11 FOR 3" AND 6" CARRIER PIPES AND SDR 21 FOR 6" AND 10" CONTAINMENT PIPES. ALL FITTINGS ARE TO BE MOLDED UNLESS NOTED OTHERWISE.
2. ALL HDPE VERTICAL ALIGNMENT IS TO BE MET USING A MINIMUM 20' RADIUS BEND OR IN ACCORDANCE WITH MANUFACTURER'S RECOMMENDATION. MAINTAIN 42" MINIMUM COVER OVER TOP OF PIPE.
3. THE LOCATION AND ELEVATION OF EXISTING UNDERGROUND UTILITIES ARE APPROXIMATE. FIELD VERIFY PRIOR TO CONSTRUCTION.
4. INSTALL BLIND FLANGE ON DISCHARGE AND/OR TREATMENT LINES AT LOCATIONS SHOWN. AT EACH BLIND FLANGE INSTALL UTILITY MARKER. UTILITY MARKER SHALL BE A MIN. 3.5" WIDE, 6' LONG WITH A MIN. 3' INSTALLED ABOVE GRADE, YELLOW IN COLOR, WITH THE WORDS DISCHARGE LINE OR TREATMENT LINE WRITTEN IN BLACK LETTERS. UTILITY MARKERS SHALL BE CARSONITE INTERNATIONAL, OR EQUAL AS A MINIMUM.
5. LOCATION GIVEN FOR ST-6 (10)"-B4-7000 TRANSFER LINE. GW-DISCHARGE LINE AND GW-TREATMENT LINE ARE LOCATED IN THE SAME TRENCH UNLESS OTHERWISE NOTED.
6. AREAS RESERVED FOR FUTURE PROJECTS BY OTHERS EXCEPT FOR INSTALLATION OF OVERHEAD ELECTRIC AND UNDERGROUND UTILITIES. MAINTAIN AND ALLOW ACCESS TO THESE AREAS DURING CONSTRUCTION.
7. PIPE TO ALWAYS SLOPE FROM LOW POINTS TO AIR RELEASE VALVES AT THE HIGH POINTS. AVOID INTERMEDIATE HIGH POINTS. FIELD ADJUST AIR RELEASE VALVES TO ENSURE THEY ARE AT THE HIGH POINT IN THE LINE
8. PROVIDE CONCRETE ENCASEMENT ON PIPES FROM 5' EAST OF ST-232 TO 5' WEST OF ST-249. CONCRETE TO BE 6" MINIMUM THICKNESS ON ALL SIDES OF PIPES.

CENTERLINE CURVE DATA				
CURVE	RADIUS	LENGTH	DELTA	TANGENT
R11	25.00'	29.18'	66°52'56"	16.51'
R12	25.00'	12.32'	28°19'23"	6.28'
R13	25.00'	28.75'	65°52'46"	16.20'
R14	100.00'	25.57'	14°41'45"	12.86'
R15	100.00'	65.60'	37°32'55"	34.07'
R16	40.00'	24.82'	35°34'19"	12.84'
R17	75.00'	65.55'	50°4'18"	35.02'
R18	50.00'	105.16'	120°15'37"	87.06'
R19	125.00'	43.13'	19°46'47"	21.79'
R20	40.00'	12.09'	17°19'06"	6.10'
R21	40.00'	8.28'	11°51'31"	4.16'
R22	40.00'	7.41'	10°37'05"	3.72'
R23	40.00'	11.00'	15°46'32"	5.54'

RELATED DWG NO.	DRAWING TITLE	SHEET NO.
92X-5900-X-00320	DRAWING INDEX	X0002
92X-5900-X-00321	LEGEND AND GENERAL NOTES	X0003
92X-5900-G-00282	SITE PLAN	G0005
92X-5900-G-00372	ENLARGEMENT RETENTION BASIN #3	G0011
92X-5900-G-00368	EROSION AND SEDIMENT CONTROL - SHEET 2 OF 2	G0013
92X-5900-G-00304	TRANSFER LINE - PLAN AND PROFILE - SHEET 1 OF 3	G0014
92X-5900-G-00306	TRANSFER LINE - PLAN AND PROFILE - SHEET 3 OF 3	G0016
92X-5900-G-00307	WATER LINE DETAILS	G0019
92X-5900-G-00309	MISCELLANEOUS DETAILS SHEET 1 OF 3	G0020
92X-5900-G-00308	MISCELLANEOUS DETAILS SHEET 2 OF 3	G0021

000018

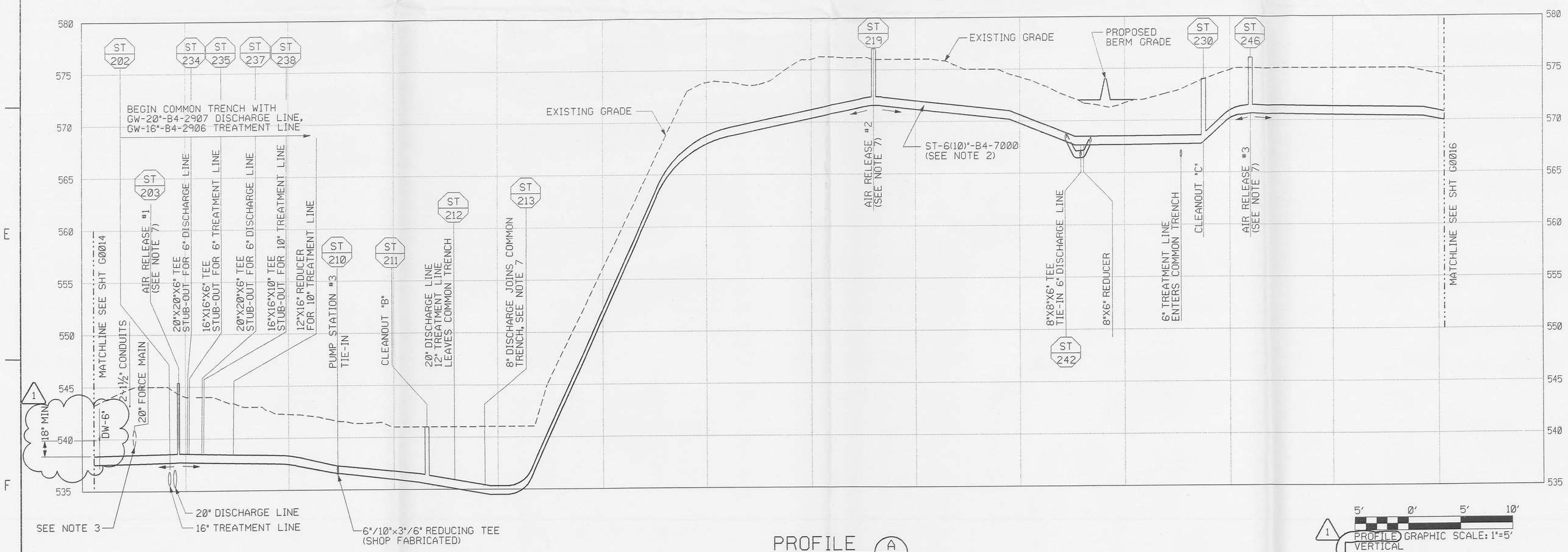

PROFILE (A / G0015)
SCALE: HOR 1"=50'
VER 1"=5'

PROFILE (1) GRAPHIC SCALE: 1"=5' VERTICAL
PROFILE (1) GRAPHIC SCALE: 1"=50' HORIZONTAL

REV. NO.	ISSUE OR REVISION PURPOSE - DESCRIPTION	A-E	FERMCO	DATE
1	ADDED EXISTING DW-6" LOCATION, PER DCN:20401-005	JMU	N/A	8/27/97
0	CERTIFIED FOR CONSTRUCTION	JMU	N/A	6/13/97

UNITED STATES DEPARTMENT OF ENERGY
FERNALD ENVIRONMENTAL MANAGEMENT PROJECT

THIS DRAWING PREPARED BY
PARSONS
THE RALPH M. PARSONS CO. - PARSONS MAIN, INC. - ENGINEERING-SCIENCE, INC.
CINCINNATI, OHIO

PROJECT NAME
WASTE UNITS REMEDIATION
SOUTHERN WASTE UNITS - SITE PREPARATION PACKAGE

DRAWING TITLE
CIVIL
TRANSFER LINE - PLAN AND PROFILE
SHEET 2 OF 3

STATE OF OHIO — FRANKLIN M. PARTON, JR. NO. E-57614 — REGISTERED PROFESSIONAL ENGINEER

DRAWN BY	DATE	LEAD ENGINEER	DATE	CHECKED BY	DATE
R. LINDGREN	06/12/96	F.P. PARTON, JR.	6/12/97	K. GERARD	01/18/97

PLANT/BLDG. NO.	FLOOR	SCALE	CLASS
		1"=50'	

SUBMITTED FOR APPROVAL	FERMCO CRU APPROVAL	FERMCO PROJECT NO.
J.M. USHER 6/13/97 (A-E, DATE)	N/A (DATE)	20400

PREPARED UNDER PARSONS PROJECT ORDER NUMBER	DOE PROJECT NO.	FEMP PROJECT NO.	DRAWING INDEX CODE NO.	SHEET NO.	REV. NO.
SCEP/P0165		WBS 1.1.1.1.2.3.6 00-90701	92X-5900-G-00305	G0015	1

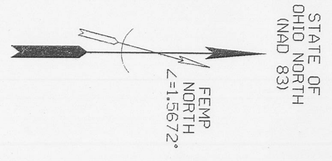

CENTERLINE CURVE DATA				
CURVE	RADIUS	LENGTH	DELTA	TANGENT
R21	50.00'	45.52'	52°01'22"	24.40'
R22	50.00'	21.77'	24°56'19"	11.06'
R23	25.00'	11.94'	27°21'20"	6.09'
R24	75.00'	35.50'	27°18'33"	18.18'
R25	50.00'	19.88'	22°50'44"	10.10'
R26	50.00'	31.89'	36°34'42"	16.52'

1

UNDERGROUND UTILITY COORDINATES (ST)			
POINT	NORTHING	EASTING	DESCRIPTION
300	477741.6	1348723.5	ANGLE POINT, TRANSFER LINE
301	477764.5	1348752.9	ANGLE POINT, TRANSFER LINE
302	477826.5	1348815.8	BEGIN RADIUS, R21
303	477830.5	1348825.6	BEGIN RADIUS, R24
304	477860.4	1348844.2	END RADIUS, R24
305	477871.4	1348847.8	BLIND FLANGE, ELEV. 568 ±
306	477867.9	1348830.4	END RADIUS, R21
307	477900.2	1348826.6	BEGIN RADIUS, R22
308	477921.7	1348828.7	END RADIUS, R22
309	477982.5	1348848.7	AIR RELEASE #4
310	478072.0	1348878.2	ANGLE POINT, TRANSFER LINE
311	478323.2	1348898.6	BEGIN RADIUS, R23
312	478334.4	1348902.4	END RADIUS, R23
313	478259.6	1348893.5	CLEANOUT "D"
314	478624.7	1349083.9	BEGIN RADIUS, R25
315	478639.3	1349097.1	END RADIUS, R25
316	478680.2	1349152.7	BEGIN RADIUS, R26
317	478705.7	1349170.8	END RADIUS, R26
318	478758.3	1349186.9	CONNECT TO SWRB DIVER. BOX
319	477872.3	1348872.3	BLIND FLANGE, ELEV 568 ±
320	478423.9	1348958.3	AIR RELEASE #5

1

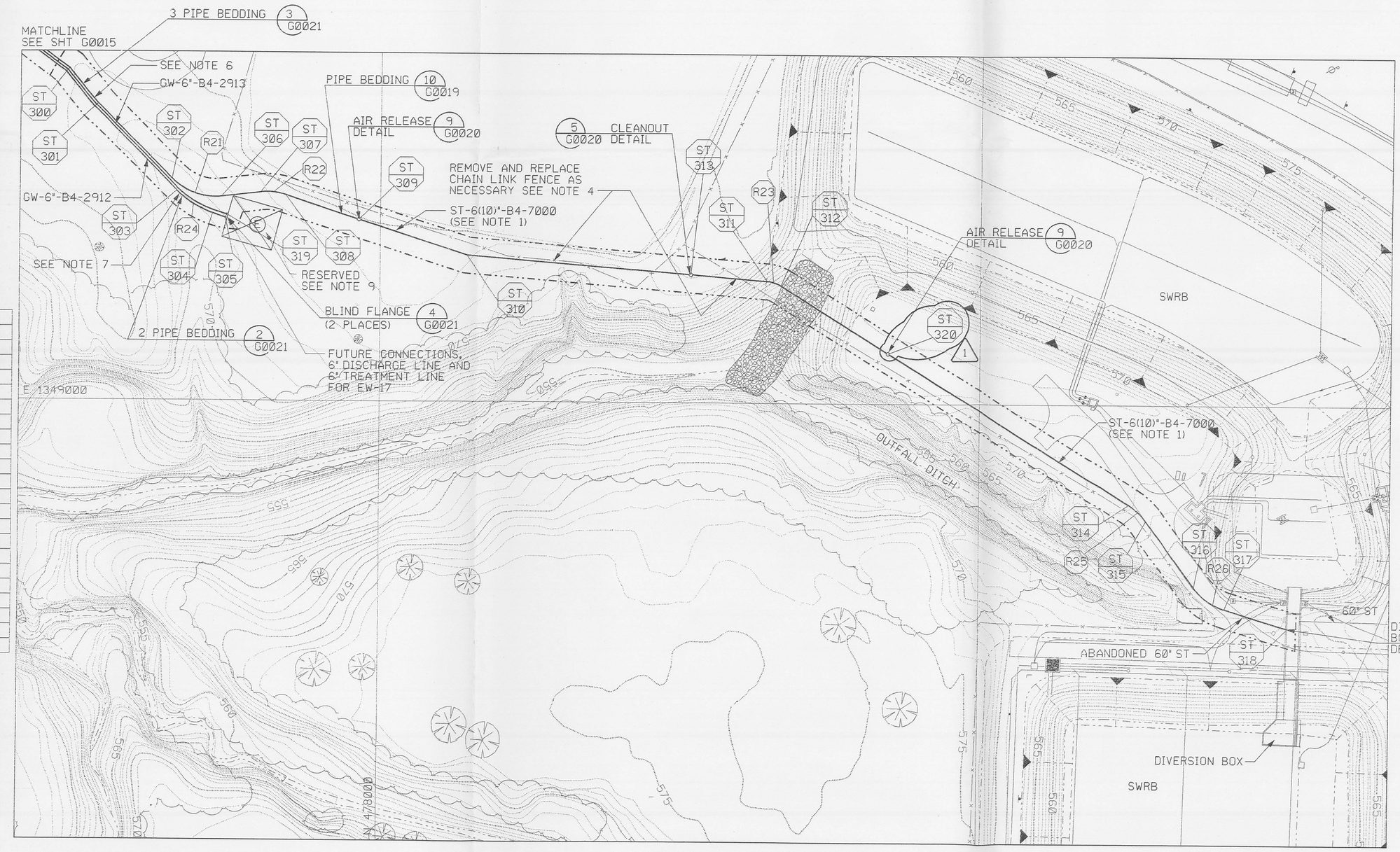

PLAN (1 G0016)
SCALE: 1"=50'

50' 0' 50' 100'
GRAPHIC SCALE: 1"=50'

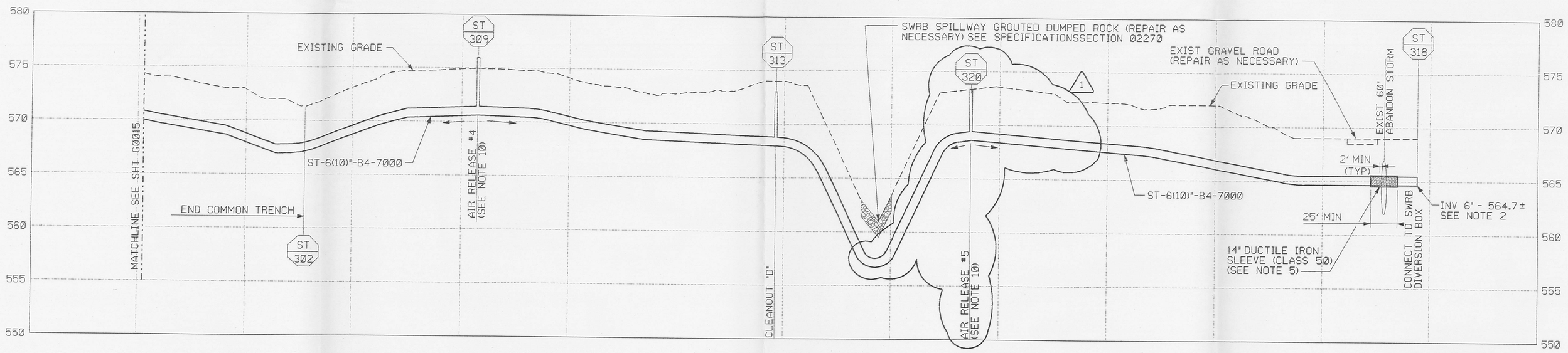

PROFILE (A G0016)
SCALE: HOR 1"=50'
VER 1"=5'

5' 0' 5' 10'
PROFILE GRAPHIC SCALE: 1"=5' VERTICAL

50' 0' 50' 100'
PROFILE GRAPHIC SCALE: 1"=50' HORIZONTAL

STATE OF OHIO
FRANKLIN M. PARTON, JR.
NO. E-57614
REGISTERED PROFESSIONAL ENGINEER

NOTES

1. FOR TRANSFER LINE, USE HDPE SDR 11 FOR 6" CARRIER PIPE AND SDR 21 FOR 10" CONTAINMENT PIPE. ALL FITTINGS ARE TO BE MOLDED UNLESS NOTED OTHERWISE.
2. ALL HDPE VERTICAL ALIGNMENT IS TO BE INSTALLED USING A MINIMUM 20' RADIUS BEND OR ACCORDANCE WITH MANUFACTURER'S RECOMENDATION. MAINTAIN 42" MINIMUM COVER OVER TOP OF PIPE.
3. THE LOCATION AND ELEVATION OF EXISTING UNDERGROUND UTILITIES ARE APPROXIMATE. FIELD VERIFY PRIOR TO CONSTRUCTION.
4. REMOVE AND REPLACE EXISTING CHAIN LINK FENCE AS REQUIRED FOR INSTALLATION OF TRANSFER LINE. COORDINATE FENCE REMOVAL AND REPLACEMENT WITH FDF.
5. (1) SAWCUT A NOTCH INTO THE TOP OF THE EXISTING ABANDONED 60" PIPE AS NECESSARY TO INSTALL 14" DUCTILE IRON SLEEVE. THE SUBCONTRACTOR SHALL GROUT AROUND THE OPENING IN THE ABANDONED 60" PIPE AND AT THE ENDS OF THE 14" SLEEVE.
6. LOCATION GIVEN FOR ST-6(10)"-B4-7000 TRANSFER LINE. GW-DISCHARGE LINE AND GW-TREATMENT LINE ARE LOCATED IN SAME TRENCH, UNLESS OTHERWISE NOTED.
7. LOCATION GIVEN FOR GW-6"-B4-2912 DISCHARGE LINE. GW-6"-B4-2913 TREATMENT LINE IS LOCATED IN SAME TRENCH.
8. INSTALL BLIND FLANGE ON DISCHARGE AND TREATMENT LINES AT LOCATIONS SHOWN. AT EACH BLIND FLANGE INSTALL UTILITY MARKER. UTILITY MARKER SHALL BE A MIN. 3.5" WIDE, 6' LONG WITH A MIN. 3' INSTALLED ABOVE GRADE, YELLOW IN COLOR, WITH WORDS "CAUTION, BURIED DISCHARGE LINE" OR "CAUTION, BURIED TREATMENT LINE" WRITTEN IN BLACK LETTERS. UTILITY MARKERS SHALL BE CARSONITE INTERNATIONAL, OR EQUAL AS A MINIMUM.
9. AREAS RESERVED FOR FUTURE PROJECTS BY OTHERS EXCEPT FOR INSTALLATION OF UNDERGROUND UTILITIES. MAINTAIN AND ALLOW ACCESS TO THESE AREAS DURING CONSTRUCTION.
10. PIPE TO ALWAYS SLOPE FROM LOW POINTS TO AIR RELEASE VALVES AT THE HIGH POINTS. AVOID INTERMEDIATE HIGH POINTS. FIELD ADJUST AIR RELEASE VALVES TO ENSURE THEY ARE AT THE HIGH POINT IN THE LINE.

RELATED DWG NO.	DRAWING TITLE	SHEET NO.
92X-5900-X-00320	DRAWING INDEX	X0002
92X-5900-X-00321	LEGEND AND GENERAL NOTES	X0003
92X-5900-G-00305	TRANSFER LINE - PLAN AND PROFILE - SHEET 2 OF 3	G0015
92X-5900-G-00307	WATER LINE DETAILS	G0019
92X-5900-G-00309	MISCELLANEOUS DETAILS - SHEET 1 OF 3	G0020
92X-5900-G-00309	MISCELLANEOUS DETAILS - SHEET 2 OF 3	G0021

000013

REV. NO.	ISSUE OR REVISION PURPOSE - DESCRIPTION	A-E	FERMCO	DATE
1	REVISED TRANSFER LINE PROFILE AND AIR RELEASE VALVE LOCATION, REVISED NOTE 5.	JMU	N/A	6/27/97
	PER DCN: 20401-005. CURVE R26 AND COORDINATE 320.			
0	CERTIFIED FOR CONSTRUCTION	JMU	N/A	6/13/97

INITIALS AND DATE

UNITED STATES DEPARTMENT OF ENERGY
FERNALD ENVIRONMENTAL MANAGEMENT PROJECT

THIS DRAWING PREPARED BY
PARSONS
THE RALPH M. PARSONS CO. - PARSONS MAIN, INC. - ENGINEERING-SCIENCE, INC.
CINCINNATI, OHIO

PROJECT NAME
WASTE UNITS REMEDIATION
SOUTHERN WASTE UNITS - SITE PREPARATION PACKAGE

DRAWING TITLE
CIVIL
TRANSFER LINE - PLAN AND PROFILE
SHEET 3 OF 3

DRAWN BY	DATE	LEAD ENGINEER	DATE	CHECKED BY	DATE
R. LINDGREN	06/12/96	F.M. PARTON, JR.	6/12/97	K. GERARD	01/18/97

PLANT/BLDG. NO.	FLOOR	SCALE	CLASS
		1"=50'	

SUBMITTED FOR APPROVAL	FERMCO CRU APPROVAL	FERMCO PROJECT NO.
J.M. USHER 6/13/97	N/A	20400
A-E DATE	DATE	

PREPARED UNDER PARSONS PROJECT ORDER NUMBER	DOE PROJECT NO.	FEMP PROJECT NO.	DRAWING INDEX CODE NO.	SHEET NO.	REV. NO.
SCEP/P0165		WBS 1.1.1.1.2.3.6 00-90701	92X-5900-G-00306	G0016	1

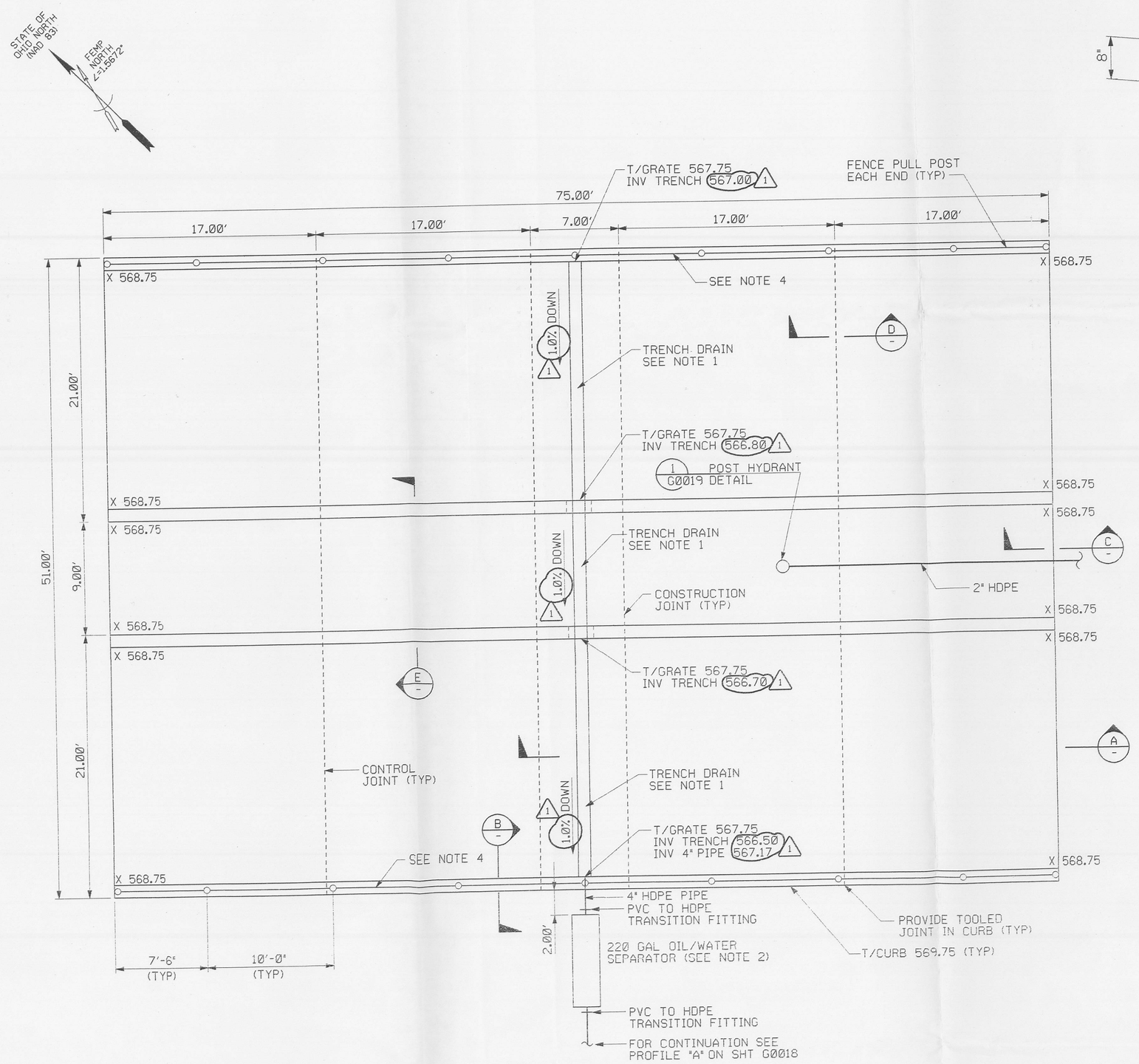

DETAIL 1 G0017 REF G0007
WASH PAD
SCALE: 1"=5'

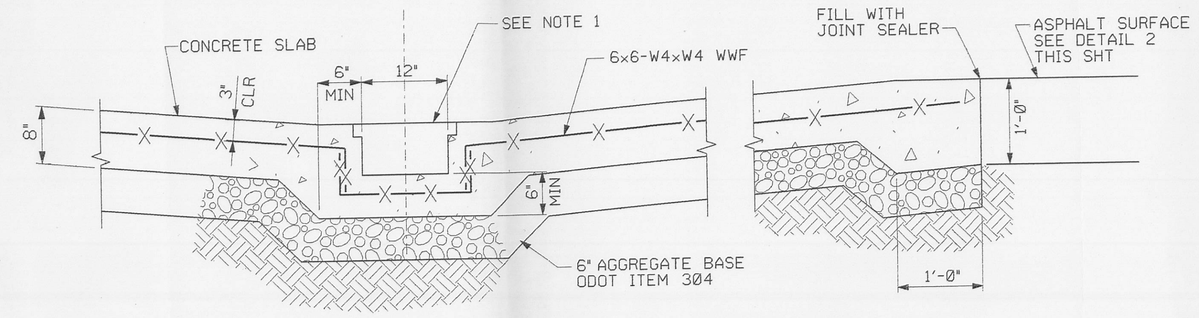

SECTION A
NTS

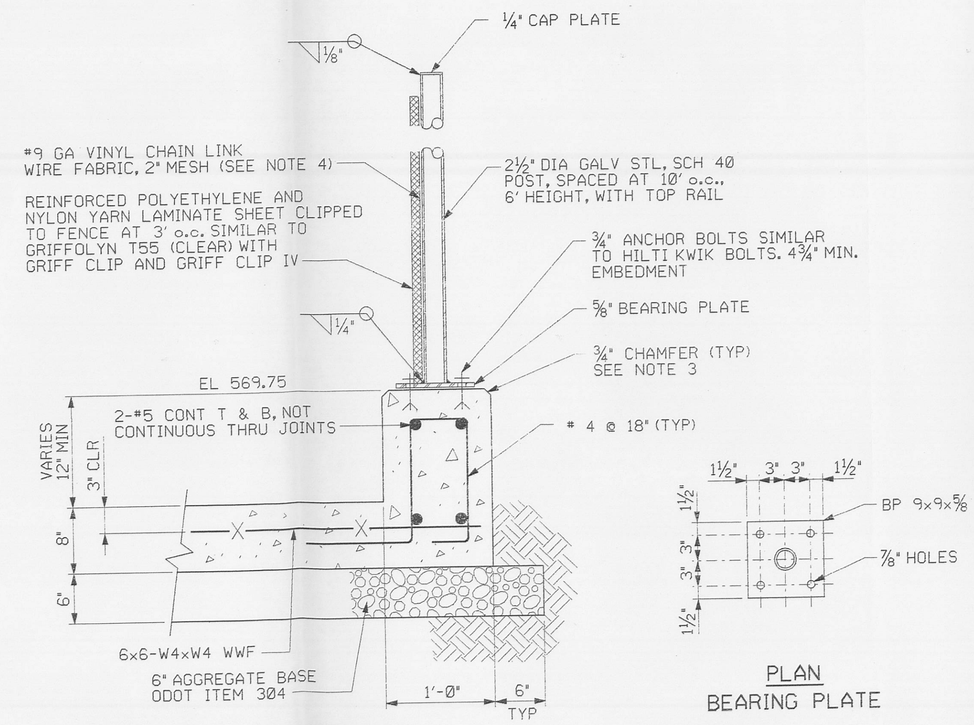

NOTE: 1. FENCE FABRIC DETAILS ARE SIMILAR TO FENCE DETAIL 2 ON SHT G0020.
2. TYPICAL ALL LOCATIONS.

SECTION B
NTS

PLAN
BEARING PLATE

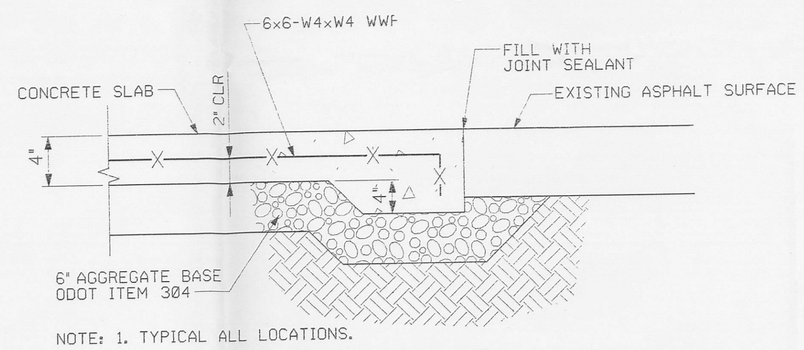

NOTE: 1. TYPICAL ALL LOCATIONS.

SECTION C
NTS

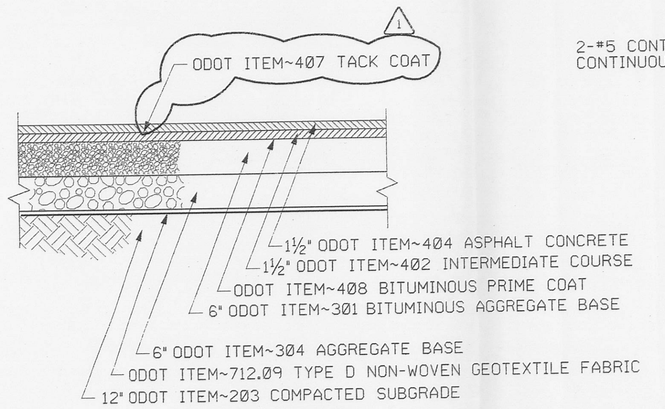

DETAIL 2 G0017 REF G0007
ASPHALTIC CONCRETE PAVING
NTS

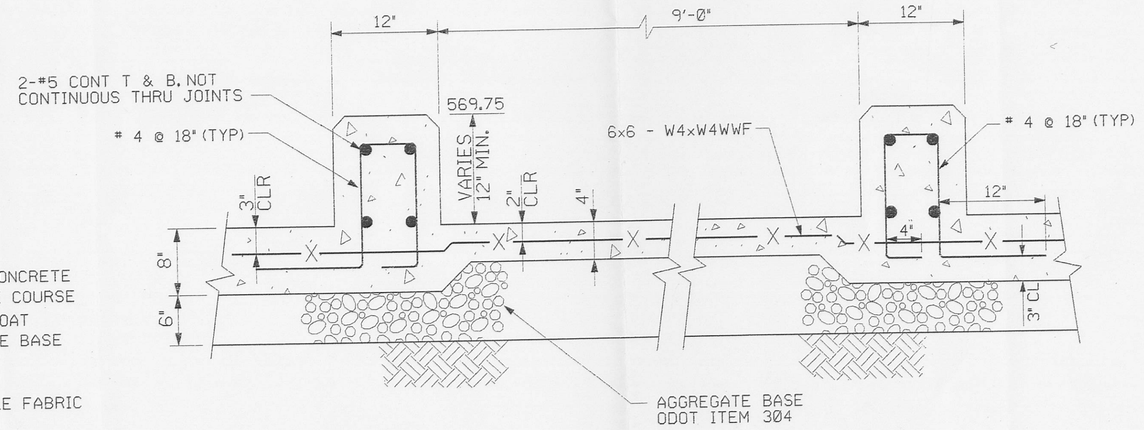

SECTION E
NTS

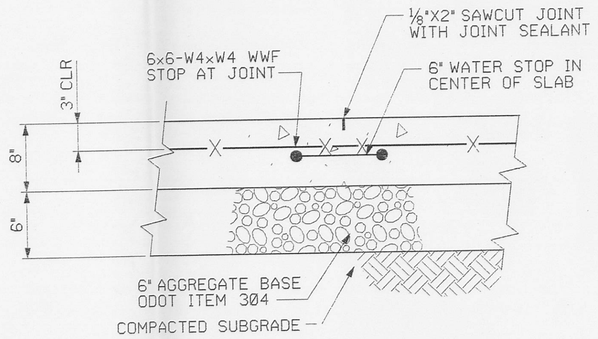

SECTION D
NTS

NOTES

1. NEENAH R-4990-DX HEAVY DUTY DUCTILE IRON FRAME AND GRATE, OR EQUAL. SET FRAME PER MANUFACTURERS RECOMMENDATIONS.
2. 220 GALLON POLYMER CONCRETE OIL/WATER SEPARATOR SIMILAR TO ACO POLYMER PRODUCTS, INC. OIL SEPARATOR SYSTEM.
3. PROVIDE 3/4" CHAMFER ON ALL EXTERIOR CORNERS OF CURBS AND CONCRETE.
4. PROVIDE 6'-0" HIGH SPLASH SHIELD ON TOP OF EXTERIOR CURBS.

RELATED DWG NO.	DRAWING TITLE	SHEET NO.
92X-5900-X-00320	DRAWING INDEX	X0002
92X-5900-X-00321	LEGEND AND GENERAL NOTES	X0003
92X-5900-G-00283	SITE PLAN - WHEEL WASH AREA	G0007
92X-5900-G-00310	WHEEL WASH SUMP DISCHARGE - PROFILES AND DETAILS	G0018
92X-5900-G-00307	WATER LINE DETAILS	G0019
92X-5900-G-00309	MISCELLANEOUS DETAILS - SHEET 1 OF 3	G0020

000020

REV. NO.	ISSUE OR REVISION PURPOSE - DESCRIPTION	A-E	FERMCO	DATE
1	REVISED INVERTS AND SLOPE OF WASH PAD TRENCH AND ADDED TACK COAT NOTE, PER DCN: 20401-005	JMU	N/A	8/27/97
0	CERTIFIED FOR CONSTRUCTION	JMU	N/A	6/13/97

INITIALS AND DATE

UNITED STATES DEPARTMENT OF ENERGY
FERNALD ENVIRONMENTAL MANAGEMENT PROJECT

THIS DRAWING PREPARED BY
PARSONS
THE RALPH M. PARSONS CO. - PARSONS MAIN, INC. - ENGINEERING-SCIENCE, INC.
CINCINNATI, OHIO

PROJECT NAME
WASTE UNITS REMEDIATION
SOUTHERN WASTE UNITS - SITE PREPARATION PACKAGE

DRAWING TITLE
CIVIL
WHEEL WASH PAD
STRUCTURAL DETAILS

DRAWN BY	DATE	LEAD ENGINEER	DATE	CHECKED BY	DATE
R. LINDGREN	03/08/96	F.M. PARTON, JR.	6/12/97	K. GERARD	1/18/97

PLANT/BLDG. NO.	FLOOR	SCALE	CLASS
		NONE	

SUBMITTED FOR APPROVAL	FERMCO CRU APPROVAL	FERMCO PROJECT NO.
J.M. USHER 6/13/97	N/A	20400

A-E DATE DATE

PREPARED UNDER PARSONS PROJECT ORDER NUMBER	DOE PROJECT NO.	FEMP PROJECT NO.	DRAWING INDEX CODE NO.	SHEET NO.	REV. NO.
SCEP/P0165		WBS 1.1.1.1.2.3.6 00-90701	92X-5900-G-00312	G0017	1

STATE OF OHIO FRANKLIN M. PARTON, JR. NO. E-57614 REGISTERED PROFESSIONAL ENGINEER

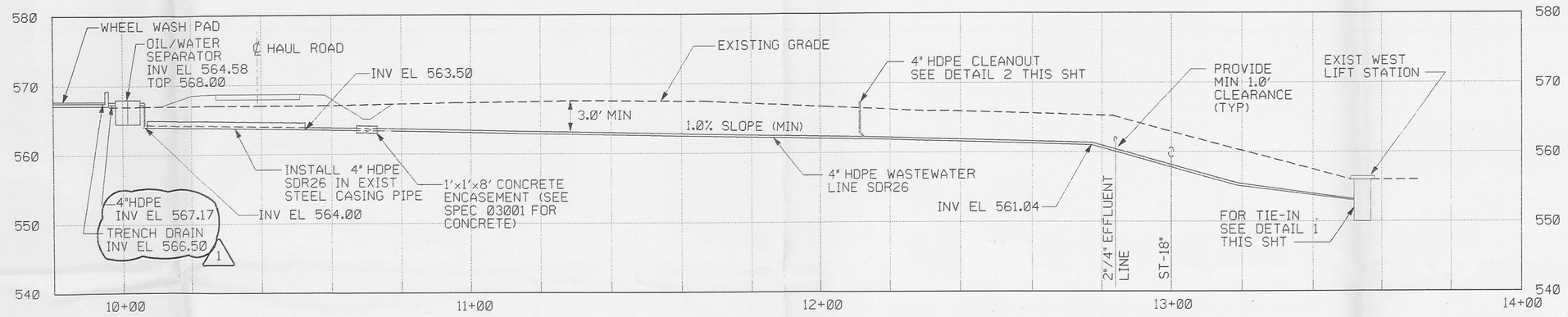

PROFILE (A / G0018) REF G0007 G0017
SCALE: HOR 1"=20' VER 1"=10'

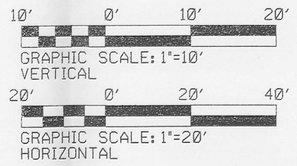

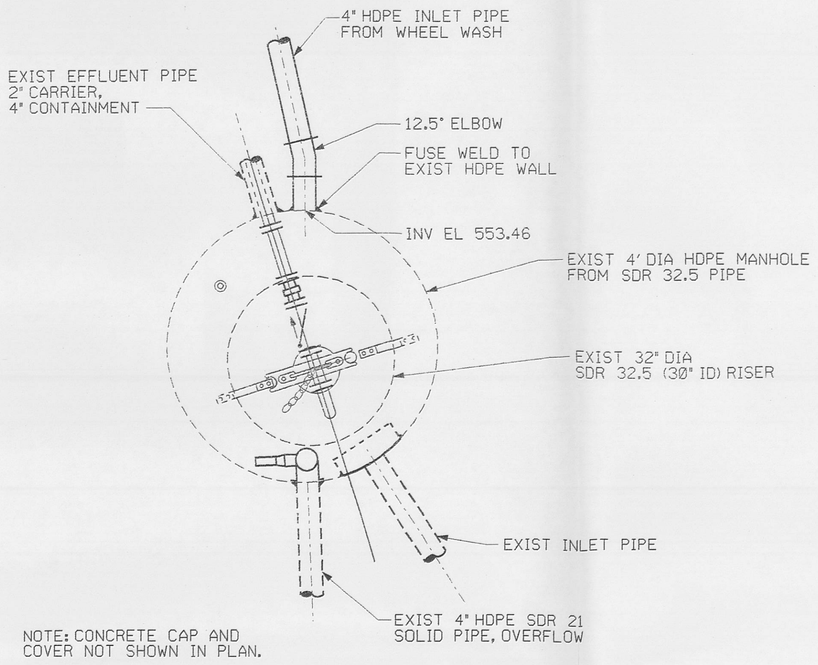

DETAIL (1 / G0018) REF G0007
PUMP MANHOLE TIE-IN
NTS

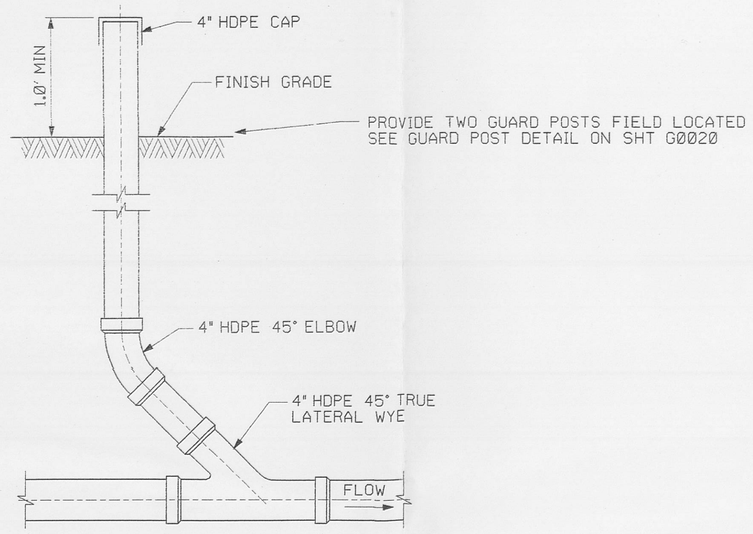

DETAIL (2 / G0018) REF G0007
GRAVITY LINE CLEANOUT
NTS

NOTES

RELATED DWG NO.	DRAWING TITLE	SHEET NO.
92X-5900-X-00320	DRAWING INDEX	X0002
92X-5900-G-00321	LEGEND AND GENERAL NOTES	X0003
92X-5900-G-00282	SITE PLAN	G0005
92X-5900-G-00283	SITE PLAN - WHEEL WASH AREA	G0007
92X-5900-G-00312	WHEEL WASH PAD - STRUCTURAL DETAILS	G0017
92X-5900-G-00309	MISCELLANEOUS DETAILS - SHEET 1 OF 3	G0020

000021

REV. NO.	ISSUE OR REVISION PURPOSE - DESCRIPTION	A-E	FERMCO	DATE
1	REVISED ELEVATIONS PER DCN: 20401-005	JMU	N/A	8/27/97
0	CERTIFIED FOR CONSTRUCTION	JMU	N/A	6/13/97

INITIALS AND DATE

UNITED STATES DEPARTMENT OF ENERGY
FERNALD ENVIRONMENTAL MANAGEMENT PROJECT

THIS DRAWING PREPARED BY
PARSONS
THE RALPH M. PARSONS CO. - PARSONS MAIN, INC. - ENGINEERING-SCIENCE, INC.
CINCINNATI, OHIO

PROJECT NAME
WASTE UNITS REMEDIATION
SOUTHERN WASTE UNITS - SITE PREPARATION PACKAGE

DRAWING TITLE
CIVIL
WHEEL WASH SUMP DISCHARGE
PROFILE AND DETAILS

DRAWN BY	DATE	LEAD ENGINEER	DATE	CHECKED BY	DATE
D.R. FOX	11/15/96	F.M. PARTON, JR.	6/12/97	K. GERARD	01/18/97

PLANT/BLDG. NO.	FLOOR	SCALE	CLASS
		AS SHOWN	

SUBMITTED FOR APPROVAL	FERMCO CRU APPROVAL	FERMCO PROJECT NO.
J.M. USHER 6/13/97	N/A	20400
A-E DATE	DATE	

STATE OF OHIO FRANKLIN M. PARTON, JR. NO. E-57614 REGISTERED PROFESSIONAL ENGINEER

PREPARED UNDER PARSONS PROJECT ORDER NUMBER	DOE PROJECT NO.	FEMP PROJECT NO.	DRAWING INDEX CODE NO.	SHEET NO.	REV. NO.
SCEP/P0165		WBS 1.1.1.1.2.3.6 00-90701	92X-5900-G-00310	G0018	1

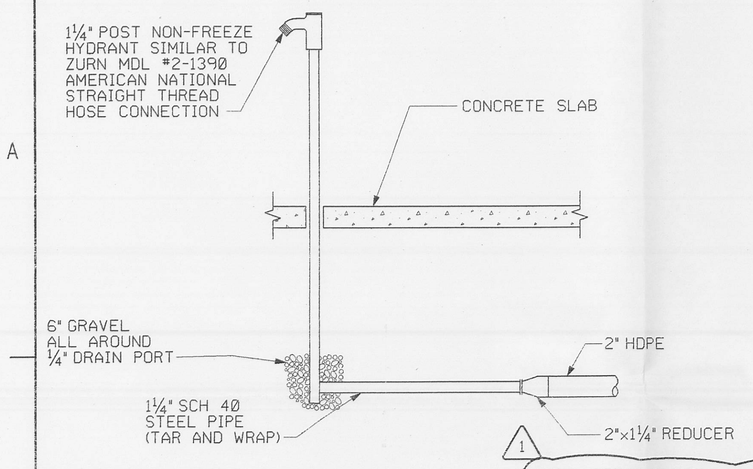

POST HYDRANT DETAIL (1 / G0019) REF G0007 G0017
NTS

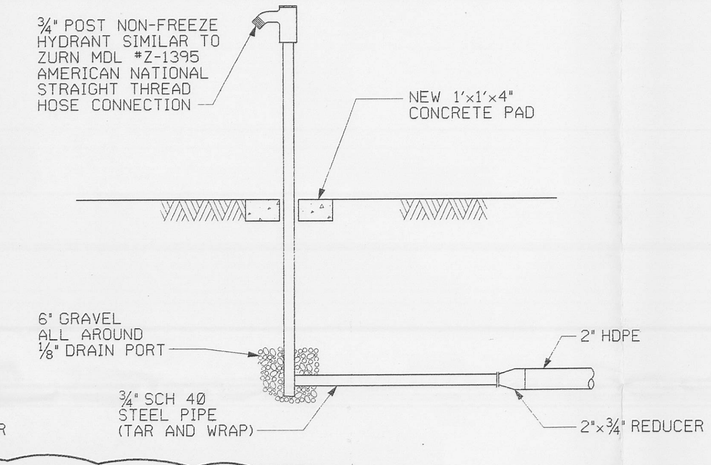

NOTE (DETAILS 1&2): FOR GATE VALVE LOCATIONS SEE SHEET G0006 AND N0003. FOR GATE VALVE DETAILS SEE DETAIL NO. 3 THIS SHEET.

POST HYDRANT DETAIL (2 / G0019) REF G0006
NTS

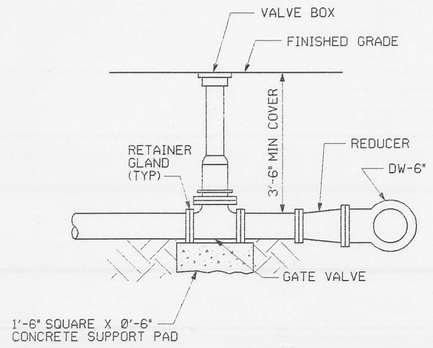

GATE VALVE DETAIL (3 / G0019) REF G0006
NTS

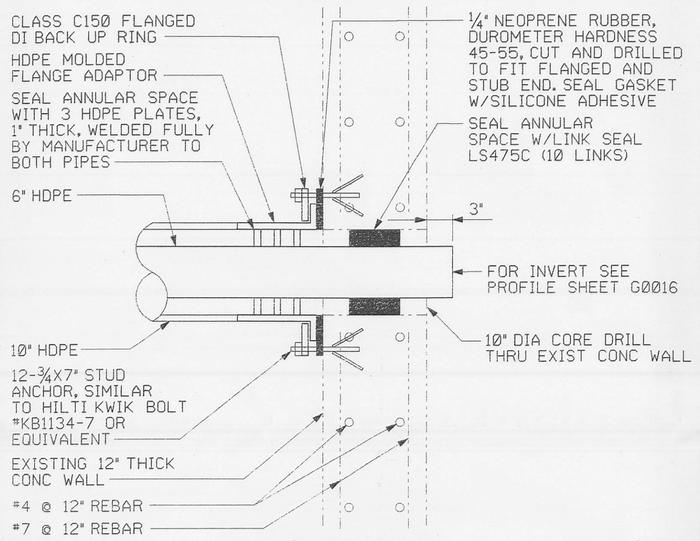

SWRB DIVERSION BOX TAP DETAIL (4 / G0019) REF G0016
NTS

NOTES

1. INSPECT ALL BACKFLOW PREVENTERS ON A WEEKLY BASIS. THE BACKFLOW PREVENTER VAULT SHALL BE MAINTAINED IN A DRY CONDITION AT ALL TIMES TO MINIMIZE POTENTIAL CROSS CONTAMINATION. SUBCONTRACTOR SHALL PUMP VAULT AS NECESSARY. AT THE COMPLETION OF THE CONTRACT, INSPECTION AND MAINTENANCE RESPONSIBILITIES SHALL BE ASSUMED BY THE EXCAVATION SUBCONTRACTOR.
2. TEST COCKS SHALL BE PLUGGED.

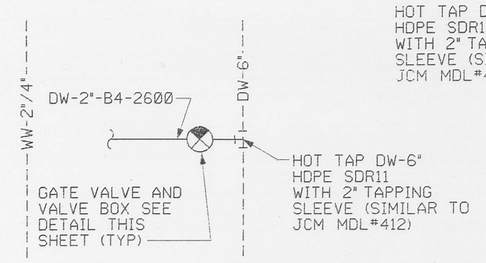

TIE-IN DETAIL (5 / G0019) REF G0006
NTS

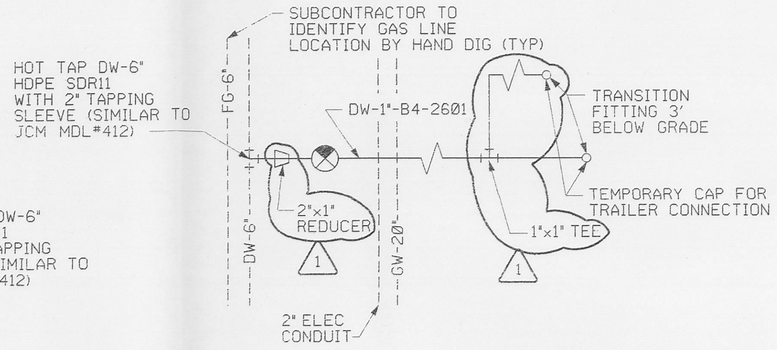

TIE-IN DETAIL (6 / G0019) REF G0006
NTS

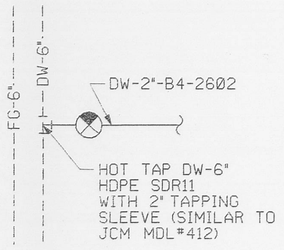

TIE-IN DETAIL (7 / G0019) REF G0006
NTS

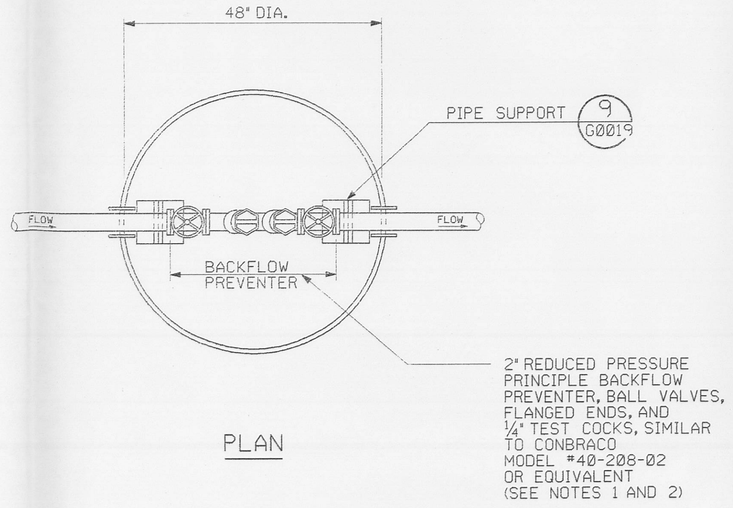

PLAN

RELATED DWG NO.	DRAWING TITLE	SHEET NO.
92X-5900-X-00320	DRAWING INDEX	X0002
92X-5900-X-00321	LEGEND AND GENERAL NOTES	X0003
92X-5900-G-00284	SITE PLAN	G0005
92X-5900-G-00284	SITE PLAN - SUPPORT AREA	G0006
92X-5900-G-00283	SITE PLAN - WHEEL WASH AREA	G0007
92X-5900-G-00304	TRANSFER LINE - PLAN AND PROFILE - SHEET 1 OF 3	G0014
92X-5900-G-00305	TRANSFER LINE - PLAN AND PROFILE - SHEET 2 OF 3	G0015
92X-5900-G-00306	TRANSFER LINE - PLAN AND PROFILE - SHEET 3 OF 3	G0016
92X-5900-G-00312	WHEEL WASH PAD - PLAN AND DETAILS	G0017
92X-5900-G-00308	MISCELLANEOUS DETAILS - SHEET 2 OF 3	G0021
92X-5900-N-00291	PIPING AND INSTRUMENTATION DIAGRAM-DRINKING WATER SYSTEM	N0003

1

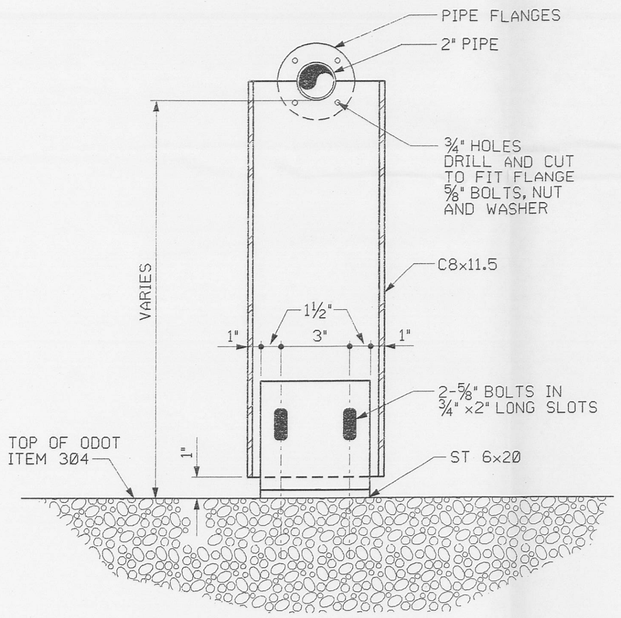

PIPE SUPPORT DETAIL (9 / -)
NTS

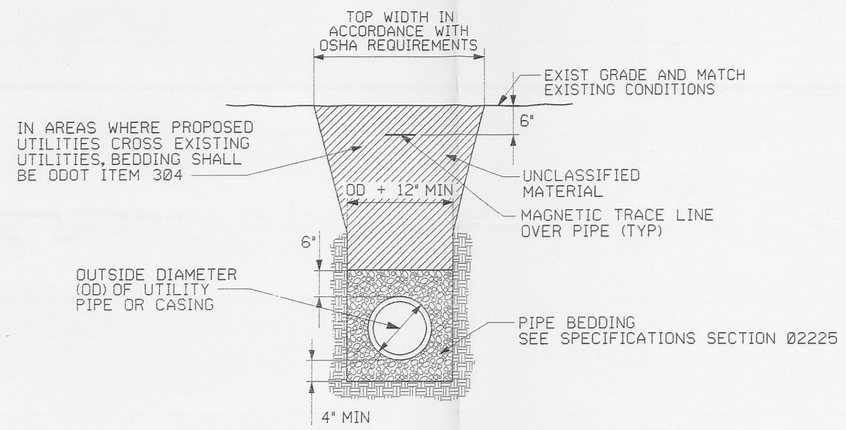

PIPE BEDDING DETAIL (10 / G0019) REF G0005 G0007 G0014 G0015 G0016
NTS

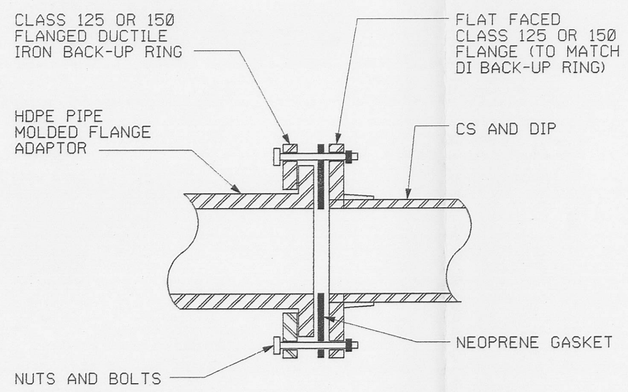

TYPICAL TRANSITION FITTING DETAIL (11 / G0019) REF G0021
NTS

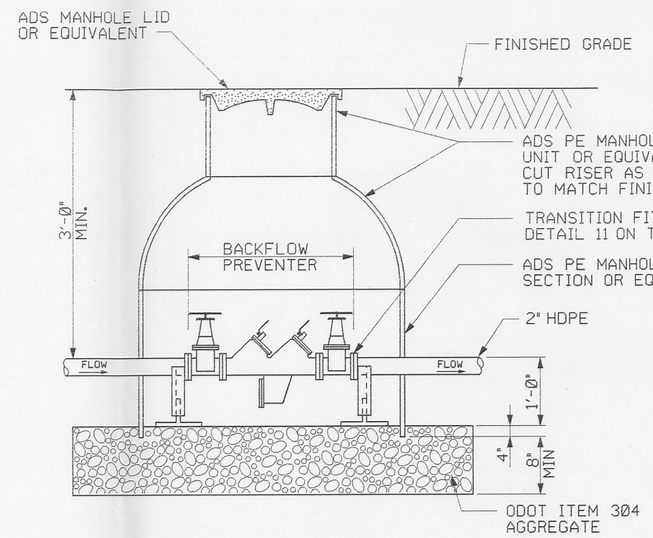

SECTION

BACKFLOW PREVENTER DETAIL (8 / G0019) REF G0006
NTS

STATE OF OHIO FRANKLIN M. PARTON, JR. NO. E-57614 REGISTERED PROFESSIONAL ENGINEER

000022

REV. NO.	ISSUE OR REVISION PURPOSE - DESCRIPTION	A-E	FERMCO	DATE
1	REVISED TIE-IN DETAIL, ADDED NOTE FOR POST HYDRANT DETAILS, ADDED RELATED SHEET PER DCN: 20401-005 AND 006	JMU	N/A	6/27/97
0	CERTIFIED FOR CONSTRUCTION	JMU	N/A	6/13/97

INITIALS AND DATE

UNITED STATES DEPARTMENT OF ENERGY
FERNALD ENVIRONMENTAL MANAGEMENT PROJECT

THIS DRAWING PREPARED BY
PARSONS
THE RALPH M. PARSONS CO. - PARSONS MAIN, INC. - ENGINEERING-SCIENCE, INC.
CINCINNATI, OHIO

PROJECT NAME
WASTE UNITS REMEDIATION
SOUTHERN WASTE UNITS - SITE PREPARATION PACKAGE

DRAWING TITLE
CIVIL
WATER LINE DETAILS

DRAWN BY	DATE	LEAD ENGINEER	DATE	CHECKED BY	DATE
D.R.FOX	03/08/96	F.M. PARTON, JR.	6/12/97	K. GERARD	1/18/97

PLANT/BLDG. NO.	FLOOR	SCALE	CLASS
		NONE	

SUBMITTED FOR APPROVAL	FERMCO CRU APPROVAL	FERMCO PROJECT NO.
J.M. USHER 6/13/97	N/A	20400
A-E DATE	DATE	

PREPARED UNDER PARSONS PROJECT ORDER NUMBER	DOE PROJECT NO.	FEMP PROJECT NO.	DRAWING INDEX CODE NO.	SHEET NO.	REV. NO.
SCEP/P0165		WBS 1.1.1.1.2.3.6 00-90701	92X-5900-G-00307	G0019	1