Draft
Waste Pits Remedial Action Project (WPRAP) Remedial Design Package

Volume 1 of 3

Submitted by:

U.S. Department of Energy
Fernald Area Office
P. O. Box 398705
Cincinnati, Ohio 45239-8705

Department of Energy

Ohio Field Office
Fernald Area Office
P. O. Box 538705
Cincinnati, Ohio 45253-8705
(513) 648-3155

MAR 05 1998

DOE-0471-98

Mr. James A. Saric, Remedial Project Manager
U.S. Environmental Protection Agency
Region V-SRF-5J
77 West Jackson Boulevard
Chicago, Illinois 60604-3590

Mr. Tom Schneider, Project Manager
Ohio Environmental Protection Agency
401 East 5th Street
Dayton, Ohio 45402-2911

Dear Mr. Saric and Mr. Schneider:

TRANSMITTAL OF DRAFT REMEDIAL DESIGN DOCUMENTS PACKAGE FOR OPERABLE UNIT 1

References:
1) Final Remedial Action Work Plan for Remedial Actions at Operable Unit 1, January 1997.
2) Amendment to the January 1997 Final Remedial Action Work Plan for Remedial Actions at Operable Unit 1, November 1997.

In accordance with the approved Remedial Action Work Plan (RAWP) for Operable Unit 1 (OU1) and its Amendment, this letter transmits the Remedial Design (RD) Documents Package, developed by International Technology (IT) Corporation, for review and approval. This submittal contains the following five documents identified in the approved RAWP for OU1:

- Design Package, including:
  - Plant Facilities Engineering Package,
  - Excavation Plan,
  - Pre-Operational Schedule;
- Pre-Operational Health & Safety Plan;

- Pre-Operational Environmental Control Plan;
- Site Preparation Package; and,
- Operation & Maintenance Plan for Existing Facilities.

A summary description of the contents of each of these elements is provided in Volume 1 of the Package.

The Package is being submitted approximately five weeks in advance of the April 9, 1998, regulatory milestone. This early action is being taken in order to accelerate, if possible, the date when construction can begin on the remedial facilities presented in the Design Package. We believe that we can work in concert with your agency closing out comments and securing, with sufficient confidence, an approved design. By obtaining agency commentary about five weeks early, we then will have a reasonable opportunity to advance the construction start date.

Some aspects of the design are subject to ongoing consideration, but do not affect the overall scheme of the design, e.g., recent developments in fugitive dust control and stockpiling other FEMP project soils are being contractually discussed with IT; the water management strategy utilizes Pit 5 and the Clearwell and interaction with the bio-surge lagoon; and, the air pollution control system design is being modeled and evaluated. The DOE would like to schedule a meeting with the U.S. EPA and OEPA within about four weeks from your receipt of the subject RD Package to discuss the design and answer any questions that you may have based on your initial review of these documents.

We advised your agency on February 26, 1998, (reference memorandum DOE-0404-98), the OU1 remediation may be impacted by a lawsuit filed by Waste Control Specialist and a resulting legal injunction effectively precluding the DOE from contracting for commercial low level waste disposal. Due to this situation, it is possible that various elements of this Design Package could be affected requiring later revision. We continue to monitor developments in this ongoing case and we will maintain communications with your agency on this matter.

If you have any questions or comments, or to schedule a time to discuss this package, please contact Dave Lojek at (513) 648-3127.

Sincerely,

Johnny Reising

Johnny W. Reising
Fernald Remedial Action
Project Manager

FEMP:Lojek

Enclosure: As Stated

cc w/enc:

S. Fauver, EM-42/GTN
G. Jablonowski, USEPA-V, SHRE-8J
R. Beaumier, TPSS/DERR, OEPA-Columbus
F. Bell, ATSDR
M. Schupe, HSI GeoTrans
R. Vandegrift, ODH
F. Barker, Tetra Tech
AR Coordinator, FDF/78

cc w/o enc:

D. Carr, FDF/52-2
R. Fellman, FDF/52-1
T. Hagen, FDF/65-2
J. Harmon, FDF/90
EDC, FDF/52-7

Waste Pit Remedial Action Project (WPRAP)
Remedial Design Package Contents

(Page 1 of 2)

Design Package	Design Document	Document Description
Volume 1 of 3		
Overview of Remedial Design		Summary of Remedial Design Package Contents
Plant Facilities Engineering Package	Description of Operation and Processes	Contains facility process and control descriptions for waste preparation, drying, blending, loadout, air emissions control, water management
	Design Criteria and Assumptions	Description of the criteria which effect the facility design including DOE orders, engineering standards and performance requirements
	Process Flow Diagrams (PFDs) w/Mass and Energy Balances	Contains process flow diagrams for the facility. Dryer process conditions are for the average waste profile.
	Site Plans	Plan view drawings of the overall facility layout
	General Arrangement Plans	Drawings of the facility equipment and building configuration with plan and elevation views
	Equipment Data Sheets / Specifications	Description of the process duty / performance requirements of the individual facility equipment items
	Utility Plans for Portable Structures	Utility routing drawings for the facility
	Point Source Emission Data	Estimate of air emissions from both point and fugitive sources

Waste Pit Remedial Action Project (WPRAP)
Remedial Design Package Contents

(Page 2 of 2)

Design Package	Design Document	Document Description
Volume 2 of 3		
	Excavation Plan	Description of the waste pit excavation activities
	Pre-Operational Schedule	Detailed schedule of activities through facility startup
Volume 3 of 3		
Site Preparation Package	Description of Site Preparation Activities	Presents the contents of the Site Preparation Package and their inter-relationships.
	Site Plan	Plan view drawings of the overall facility layout
	Grading Plan	Site grading plan drawing
	Associated Profiles and Details	Grading profile and detail drawings
	Specifications	Civil construction specifications
	Manufacturers' Fabrication Drawings of Portable Structures	General floor plan, skirting, and anchoring details for trailers
Project Pre-Operational	Pre-Operational Environmental Control Plan	Description of methods and materials to be used during construction to control erosion, dust and stormwater
	Operation and Maintenance Plan for Existing Facilities	Description of the inspection and maintenance activities to be performed prior to facility operation
	Pre-Operational Health and Safety Plan	Project specific health and safety plan to be used during construction and prior to facility operation

DRAFT

Waste Pits Remedial Action Project (WPRAP) Overview of Remedial Design Package

***

PREPARED
for
Fluor Daniel Fernald, Inc.
Fernald, Ohio

FDF Subcontract No. 98SC000001

***

PREPARED
by
IT Corporation
2790 Mosside Boulevard
Monroeville, PA 15146-2790

IT Project No. 773481

***

Revision B
Issue Date: February 13, 1998

Record of Issue/Revisions

Date	Rev. No.	Description of Issue/Revision
1-9-98	A	Initial issue for review and comment - draft
2-13-98	B	Draft Issue for EPA Review

Table of Contents

1.0 PURPOSE OF DOCUMENTS 1

2.0 PROJECT BACKGROUND 1
- 2.1 Site Location and Description 1
- 2.2 Remediation Strategy 1

3.0 GENERAL STRUCTURE OF REMEDIATION DESIGN PACKAGES 2

4.0 VOLUME 1 - REMEDIAL DESIGN PACKAGE CONTENTS 2
- 4.1 Plant Facilities Engineering Package 2
  - 4.1.1 Description of the Operation and Processes 2
  - 4.1.2 Design Criteria and Assumptions 2
  - 4.1.3 Process Flow Diagrams with Mass and Energy Balances 3
  - 4.1.4 Site Plans 3
  - 4.1.5 General Arrangement Plans 3
  - 4.1.6 Equipment Data Sheets and Specifications 3
  - 4.1.7 Utility Plans for Portable Structures 3
  - 4.1.8 Point Source Emissions Data 3

5.0 VOLUME 2 - REMEDIAL DESIGN PACKAGE CONTENTS 3
- 5.1 Excavation Plan 3
- 5.2 Pre-Operational Schedule 4

6.0 VOLUME 3 - REMEDIAL DESIGN PACKAGE CONTENTS 5
- 6.1 Site Preparation Package 5
  - 6.1.1 Description of Preparation Activities 5
  - 6.1.2 Site Plan 5
  - 6.1.3 Underground Utility Plan 5
  - 6.1.4 Grading Plan 5
  - 6.1.5 Associated Profiles and Details 5
  - 6.1.6 Specifications 5
  - 6.1.7 Manufacturers Fabrication Drawings of Portable Structures 5
- 6.2 Pre-Operational Environmental Control Plan 5
- 6.3 Operation and Maintenance Plan for Existing Facilities 5
- 6.4 Pre-Operational Health and Safety Plan 6

7.0 REFERENCES 6

List of Acronyms/Abbreviations

AASHTO	American Association of State Highway Transportation Officials
ABMA	American Bearing Manufacturers Association
ACGIH	American Conference of Government Industrial Hygienists
ACI	American Concrete Institute
ACM	Asbestos Containing Material
ACOE	United States Army Corps of Engineers
AFBMA	Anti-Friction Bearing Manufacturers Association
AGMA	American Gear Manufacturers Association
AISC	American Institute of Steel Construction
ALARA	As Low As Reasonably Achievable
ALTER	Accelerated Life Testing and Environmental Research Facility
AMCA	Air Movement and Control Association
ANS	American Nuclear Society
ANSI	American National Standards Institute
APC	Air Pollution Control
API	American Petroleum Institute
ARAR	Applicable or Relevant and Appropriate Requirement.
ARI	American Refrigeration Institute
ASCE	American Society of Civil Engineers
ASHRAE	American Society of Heating, Refrigeration and Air Conditioning Engineers
ASME	American Society of Mechanical Engineers
ASNT	American Society of Nondestructive Testing
ASTM	American Society for Testing and Materials
AWS	American Welding Society
AWWA	American Water Works Association
AWWT	Advanced Wastewater Treatment
BAT	Best Available Technology
BSL	Biodenitrification Surge Lagoon
CAM	Continuous Air Monitor
CBR	California Bearing Ratio
CDF	Commercial Disposal Facility
CEM	Continuous Emissions Monitor

000010

List of Acronyms and Abbreviations *(Continued)*

CEMA	Conveyor Equipment Manufacturers Association
CERCLA	Comprehensive, Environmental Response, Compensation, and Liability Act
CFR	Code of Federal Regulations
COC	Constituent of Concern
CPT	Cone Penetrometer Test
CRSI	Concrete Reinforcing Steel Institute
CRU	CERCLA/RCRA Unit
CWA	Clean Water Act of 1977, as amended
D&D	Decontamination and Dismantlement
DAC	Derived Air Concentration
DCD	Design Criteria Document
DEEP	Dewatering Excavation Evaluation Program
DOE	United States Department of Energy
DOE-NV	United States Department of Energy - Nevada Office of Operations
DOT	United States Department of Transportation
EJMA	Expansion Joint Manufacturers Association
ERDA	Energy Research and Development Administration
F	Fahrenheit
FDF	Fluor Daniel Fernald, Inc.
FEMP	Fernald Environmental Management Project
FERMCO	Fernald Environmental Restoration Management Corporation
FFCA	Federal Facilities Compliance Agreement
fpm	feet per minute
FS	Feasibility Study
FSAR	Final Safety Analysis Report
ft^2	square foot (feet)
GCS	Gas Cleaning System
GFCI	Ground Fault Circuit Interrupter
GLC	Ground Level Concentration
gpm	gallons per minute
HEPA	High Efficiency Particulate Air (filter)
hr	hour
HVAC	Heating, Ventilation, and Air Conditioning

List of Acronyms and Abbreviations *(Continued)*

IEEE	Institute of Electrical and Electronics Engineers
IES	Illuminating Engineers Society
ID	Induced Draft
IPC	Inclined Plate Clarifier
ISA	International Society for Measurement and Control
IT	IT Corporation
kg	kilogram
kV	kilovolt
kVA	kilivolt-ampere
kW	kilowatt
lb	pound
LLRW	Low Level Radioactive Wastes
m^2	square meter
MAGLC	Maximum Allowable Ground Level Concentration
MAWC	Maximum Average Waste Concentration
MBMA	Metal Building Manufacturers Association
MCC	Motor Control Center
MEI	Maximally Exposed Individual
MHB	Material Handling Building
μCi/cc	microcurie per cubic centimeter
mrem	millirem
MSS	Manufacturers Standardization Society
NAD	North American Datum
NEC	National Electric Code
NEMA	National Electrical Manufacturers Association
NESHAP	National Emission Standards for Hazardous Air Pollutants
NETA	National Electrical Testing Association
NFC	National Fuel Code
NFPA	National Fire Protection Association
NP	Nonplastic
NPDES	National Pollutant Discharge Elimination System
NPH	Natural Phenomenal Hazard
NTS	Nevada Test Site

List of Acronyms and Abbreviations *(Continued)*

OAC	Ohio Administrative Code
OBBC	Ohio Basic Building Code
ODOT	Ohio Department of Transportation
Ohio	EPA Ohio Environmental Protection Agency
OSDF	On Site Disposal Facility
OSHA	Occupational Safety and Health Administration
OU	Operable Unit
PC	Performance Category
PCB	Polychlorinated Biphenyl
pcf	pounds per cubic foot
pCi/L	picoCuries per liter
PFD	Process Flow Diagram
PID	Photoionizing Detector
PPE	Personal Protective Equipment
psf	pounds per square foot
psi	pounds per square inch
PTI	Permit to Install
PTO	Permit to Operate
PVC	Polyvinyl Chloride
QAP	Quality Assurance Plan
RCRA	Resource Conservation and Recovery Act
RD	Remedial Design
RI	Remedial Investigation
RLB	Railcar Loadout Building
ROD	Record of Decision
SAE	Society of Automotive Engineers
SCS	Soil Conservation Service
SDI	Steel Deck Institute
sec	second
SJI	Steel Joist Institute
SMACNA	Sheet Metal and Air Conditioning Contractors National Association
SPT	Standard Penetration Test
SSC	Structure, System and Component

List of Acronyms and Abbreviations *(Continued)*

STD	Standard (DOE)
SWM	Solid Waste Management
SWPPP	FERMCO Storm Water Pollution Prevention Plan
TBC	To Be Considered
TBP	Tributyl Phosphate
TEMA	Tubular Exchanger Manufacturers Association
TOC	Total Organic Carbon
TSDF	Waste Treatment, Storage or Disposal Facility
UBC	Uniform Building Code
UCRL	University of California Research Laboratory
UL	Underwriters Laboratory
USCS	Unified Soil Classification System
USEPA	United States Environmental Protection Agency (EPA)
V	Volt
WAC	Waste Acceptance Criteria
WESP	Wet Electrostatic Precipitator
WPRAP	Waste Pits Remedial Action Project
WTS	IT Corporation Wastewater Treatment System
yd^3	cubic yard
yr	year

1.0 PURPOSE OF DOCUMENTS

The design documents contained in this Remedial Design Package are submitted for review by the United States Environmental Protection Agency (US EPA)/Ohio Environmental Protection Agency (Ohio EPA) for the Fernald Waste Pits Remedial Action Project (WPRAP) remediation of the Fernald Environmental Management Project (FEMP) Operable Unit 1 (OU1) waste pits.

2.0 PROJECT BACKGROUND

2.1 Site Location and Description

The FEMP is a 1050-acre, government owned facility located approximately 18 miles northwest of the city of Cincinnati, Ohio. It is situated on the boundary between Hamilton and Butler Counties. The FEMP, which operated under the name of the Feed Materials Production Center, produced high purity uranium metal products for the United States Department of Energy (DOE) and its predecessor agencies from 1952 to 1989. Former uranium processing operations at the FEMP were limited to a fenced, 136-acre tract, closed to public access, known as the production area. In June 1991, the site was officially closed for production by an act of Congress. The Fernald site was included on the Comprehensive Environmental Response, Compensation, and Liability Act National Priorities List in 1989. The current mission of the site is the safe environmental restoration of the site in accordance with all applicable requirements.

OU1 is a well-defined, 37.7-acre area located in the northwest quadrant of the FEMP site. Large quantities of liquid and solid wastes that were generated by various chemical and metallurgical processing operations were stored or disposed in the six waste pits and the Clearwell, or burned in the Burn Pit. These waste pits are located in a portion of the FEMP Waste Storage Area and are contained within the boundaries of OU1. A detailed discussion of each waste pit's construction, contents, and volume of waste material is provided in the Remedial Investigation Report for Operable Unit 1 (DOE 1994).

2.2 Remediation Strategy

Remediation of OU1 is based on the final Record of Decision (ROD) for Remedial Action at Operable Unit 1 (DOE 1995a), signed by the US EPA on March 1, 1995. The overall goal of the Waste Pits Remedial Action Project (WPRAP) (the area known as OU1) is to remediate all the OU1 components in a timely, efficient, and cost-effective manner, ensuring compliance with all Applicable or Relevant and Appropriate Requirements (ARARs), and protecting human health and the environment. The selected remedy presented in the OU1 ROD is excavation of the waste

pit contents, waste processing and treatment by thermal drying (as necessary to remove free water), and off-site disposal at a Commercial Disposal Facility (CDF).

3.0 GENERAL STRUCTURE OF REMEDIATION DESIGN PACKAGES

This submittal consists of several design documents which have been compiled into three separate volumes. The information is divided as follows:

- Volume 1 addresses the equipment and facilities directly associated with the processing of waste.
- Volume 2 addresses the waste excavation plan and pre-operational schedule.
- Volume 3 addresses the site preparation package and the project preoperational plans to support the construction and other pre-operation activities of the waste processing facility.

To the extent possible, various documents reference each other rather than repeat detailed information.

4.0 VOLUME 1 - REMEDIAL DESIGN PACKAGE CONTENTS

4.1 Plant Facilities Engineering Package

4.1.1 Description of the Operation and Processes

This document provides a description of the WPRAP operation and processes including the sequence and operating parameters associated with waste preparation; material handling; wastewater and storm water treatment, control, and distribution; process surge capacity and configuration; blending; drying; air emissions controls (fugitive and point source); sampling and analysis; loadout; and process control philosophy. Also discussed are the rationale for selecting the process sequence and utility requirements.

4.1.2 Design Criteria and Assumptions

This document provides a description of the specific criteria which affect the WPRAP design including performance requirements, applicable DOE orders, and standard industrial codes. The design criteria also covers the compliance strategy for ARARs and substantive permit requirements. A permitting crosswalk is presented including a description of where in the design package a particular requirement is addressed. The design criteria also summarizes the results of

studies and evaluations made in support of the design. Assumptions are stated for any design criteria which can not be verified until field work begins.

4.1.3 Process Flow Diagrams with Mass and Energy Balances

Contains the Process Flow Diagrams (PFDs) for the facility processes including waste preparation, drying and off-gas treatment, dried waste loadout and blending, wastewater treatment, and overall water balance.

4.1.4 Site Plans

A plan view drawing of the overall WPRAP facility layout is given in this section.

4.1.5 General Arrangement Plans

Drawings of the equipment and building configurations are given in this section in both plan and elevation views. The waste preparation and blending area, drying and off-gas treatment area, rail car loadout area, and wastewater treatment area are included in the views.

4.1.6 Equipment Data Sheets and Specifications

A description of the process duty and/or general specification for major process equipment items is given in this section. This includes the material handling equipment, dryer and off-gas treatment system, and wastewater treatment equipment.

4.1.7 Utility Plans for Portable Structures

Drawings of the utility routing to the facility portable structures (trailers) is given in this section. Utilities for both the process and administration area structures are included.

4.1.8 Point Source Emissions Data

Estimate of the air emissions from the dryer and off-gas treatment system. Also included are fugitive emission estimates from the Material Handling Building, and Railcar Loadout Building.

5.0 VOLUME 2 - REMEDIAL DESIGN PACKAGE CONTENTS

5.1 Excavation Plan

Provides a description of the processes used to transfer material from the waste pit area to the waste processing facility. The document also includes the following:

- Overall excavation sequence and method
- Criteria and assumptions (including slope stability and bearing capacity of the waste material)
- Profiles, sections, and details of the pits as they currently exist
- Material handling considerations, including considerations specific to the handling of nontypical wastes
- Discussion of pit dewatering
- Leachate and storm water run-on/runoff management and approach to minimize leachate infiltration to the aquifer
- Excavation sequencing and processes to be used in the excavation of individual waste pits including plans and sections
- Manpower requirements and equipment selection for waste excavation and transport
- Proposed stockpile areas for potential blending and segregation
- Debris management and segregation
- Air monitoring (specific sampling and analysis details are given in the Sampling and Analysis Plan which is not part of this package)
- Dust and fugitive emissions controls
- Equipment decontamination facilities and procedures
- Interim and final grading.

5.2 Pre-Operational Schedule

The schedule identifies major activity elements and milestones, from WPRAP contract award to Initiation of Operations.

6.0 VOLUME 3 - REMEDIAL DESIGN PACKAGE CONTENTS

6.1 Site Preparation Package

6.1.1 Description of Preparation Activities

This section presents the contents of the site preparation package and their interrelationships.

6.1.2 Site Plan

Drawing depicts the overall facility layout including relative location of the WPRAP facility structures and equipment in relation to the waste pits and rail spurs.

6.1.3 Underground Utility Plan

This section contains utility routing drawings for the facility. Utilities for both the process and administration area structures are included.

6.1.4 Grading Plan

This section contains the soil grading plan drawing for construction of the WPRAP facility.

6.1.5 Associated Profiles and Details

Contains soil grading drawings which show the sections, profiles and details for construction of the facility.

6.1.6 Specifications

Contains civil construction specifications.

6.1.7 Manufacturers Fabrication Drawings of Portable Structures

General floor plan, skirting , and anchoring details for trailers.

6.2 Pre-Operational Environmental Control Plan

This document contains a description of the methods and materials to be used during site preparation and construction to control erosion, dust, and storm water to minimize the impact of these activities upon the environment.

6.3 Operation and Maintenance Plan for Existing Facilities

This document contains a description of the inspection and maintenance activities to be performed in the waste pit and site improvement area prior to facility operation.

6.4 Pre-Operational Health and Safety Plan

The Pre-Operational Health and Safety Plan provides the methods which will be implemented to comply with the FEMP health and safety requirements for the safe performance of the pre-operational remedial activities.

7.0 REFERENCES

Accelerated Life Testing and Environmental Research Facility (ALTER), 1994, ***CRU1 Cooperative Remedy Screening Program, Final Report***, Cincinnati: University of Cincinnati, College of Engineering, July.

Accelerated Life Testing and Environmental Research Facility (ALTER), 1995, ***Interim Report, CRU-1-Dewatering, Excavation, Evaluation Program: Waste Pits 1 2, and 3***. Cincinnati: University of Cincinnati, College of Engineering, September.

Fernald Environmental Management Progect (FEMP), ***Stormwater Pollution Prevention Plan***, RM-0039.

Fernald Environmental Restoration Management Corporation (FERMCO), 1995, ***Management Plan: FERMCO Policies and Requirements Manual***, Rev. 7, Fernald: FERMCO, RM-0016, June.

Ohio Department of Natural Resources (DNR), 1996, ***Rainwater and Land Development, Ohio's Standards for Stormwater Management Land Development and Urban Stream Protection***, Second Edition, 1996.

Harmer, D., IT Corporation, 1997, ***Calculation Bases and Methods for Uranium Enrichment/ Depletion in the Fernald Operable Unit 1 Pits***, June 10, 1997.

Jenike and Johanston, Inc., 1994, ***Flow Properties Test Report***, Westford, MA, Jenike and Johanston, Inc. 1994.

Kirk-Othmer, 1994, "Encyclopedia of Chemical Technology," Fourth Edition, Vol. 9, Elastomers, Polyisoprene to Expert Systems, published by John Wiley & Sons, New York, New York.

PARSONS ERA Project, 1994, ***Report on Execution of Surrogate Waste Drying Tests***, Revision A, Fairfield: August 1994.

PARSONS ERA Project, 1994, ***Shredding Engineering Tests Report***, Fairfield: PARSONS 1994.

PARSONS ERA Project, 1995, ***Preliminary Technical Summary of DEEP Test Data***, Revision A, Fairfield: PARSONS October 1995.

PARSONS ERA Project, 1995, ***Dryer Off-Gas Compositions, Operable Unit 1 Remediation System***, Revision A, Fairfield: PARSONS, September 1995.

PARSONS ERA Project, 1995, ***Process Description for the Remediation System Design***, Revision C, Fairfield: PARSONS, October 1995.

PARSONS ERA Project, 1995, ***Control Philosophy for the Remediation System Design***, Revision C, Fairfield: PARSONS, October 1995.

PARSONS ERA Project, 1995, ***Preliminary Estimate of Utility Requirements for Proposed Remedial Facilities for OU1 Remediation***, Revision B, Fairfield: PARSONS, October 1995.

PARSONS ERA Project, 1995, ***Description of Site Preparation Activities***, and related drawings, Fairfield: PARSONS, October 1995.

PARSONS ERA Project, 1995, ***Waste Excavation Plan for the Operable Unit 1 Remediation System Design***, Fairfield: PARSONS, October 1995.

U.S. Department of Commerce, 1995, "Rainfall Frequency Atlas of the U.S.", Technical Paper 40.

U.S. Department of Energy (DOE), 1994, ***Operable Unit 1 Dewatering Excavation Evaluation Program (DEEP) Treatability Study Work Plan***, Final, Fernald: DOE Fernald Field Office, DOE 1994a.

U.S. Department of Energy (DOE), 1994b, ***Remedial Investigation Report for Operable Unit 1***, Final, Fernald: DOE Fernald Field Office, DOE, August 1994.

U.S. Department of Energy (DOE), 1994, ***Feasibility Study Report for Operable Unit 1***, Final, Fernald: DOE Fernald Field Office, DOE/EA-0938, October 1994.

U.S. Department of Energy (DOE), 1995, ***Final Record of Decision for Remedial Actions at Operable Unit 1***, Fernald: DOE Fernald Field Office, January 1995.

U.S. Department of Energy (DOE), 1995, ***Final Remedial Design Work Plan for Remedial Actions at Operable Unit 1***, Fernald: DOE Fernald Field Office, July 1995.

U.S. Department of Energy (DOE), 1997, ***Final Remedial Action Work Plan for Remedial Actions at Operable Unit 1, Fernald, DOE Fernald Area Office***, January, 1997.

Weston, Roy F., Inc., 1988, ***Characterization Investigation Study Geotechnical Evaluation of Waste Pit Material Properties and Boring Logs***, Cincinnati, March 1988.

DRAFT

Waste Pits Remedial Action Project (WPRAP) Description of the Operation and Processes

***

PREPARED
for
Fluor Daniel Fernald, Inc.
Fernald, Ohio

FDF Subcontract No. 98SC000001

***

PREPARED
by
IT Corporation
2790 Mosside Boulevard
Monroeville, PA 15146-2790

IT Project No. 773481

***

Revision B
Issue Date: February 13, 1998

Record of Issue/Revisions

Date	Rev. No.	Description of Revision
1-9-98	A	Original Issue of Draft
2-13-98	B	Draft Issue for EPA Review

Table of Contents

List of Tables v
List of Acronyms/Abbreviations vi
1.0 INTRODUCTION 1
2.0 PROCESS DESCRIPTION 1
2.1 Waste Excavation 1
2.2 Waste Blending 2
2.3 Waste Preparation (PFD D-15-10-001) 4
2.3.1 Initial Waste Classification 4
2.3.2 Initial Blending 5
2.3.3 Screening 5
2.3.4 Shredding 6
2.3.5 Dust Control 6
2.3.6 Waste Processing 7
2.3.7 Final Blending 7
2.4 Dryer Feed System (PFD D-10-10-001) 7
2.5 Thermal Dryer Operation (PFD D-20-10-001) 8
2.6 Gas Cleaning System (PFD D-50-10-001) 9
2.7 Railcar Loadout and Lidding (PFD D-35-10-001) 12
2.7.1 Railcar Loadout and Lidding Operations 13
2.7.2 Railcar Rejection at the CDF 14
2.8 Water Management (PFDs M-65-10-001 and M-90-10-001) 15
2.8.1 Process Wastewater 17
2.8.1.1 Cooling Tower Blowdown Water 17
2.8.1.2 Oil/Water Separator Discharge 17
2.8.1.3 Backwash/Recycle Water from the WTS 17
2.8.2 Nonprocess Wastewater and Contact Storm Water 18
2.8.2.1 Laundry Water 18
2.8.2.2 Respirator Wash Water 18
2.8.2.3 Changeout Facility Shower Water 19
2.8.2.4 Grey Water Collection Tank 19
2.8.2.5 Laboratory Wastewater 19
2.8.2.6 Material Handling Building Collection Sumps 19
2.8.2.7 Railcar Loadout Building Decontamination Sumps 20

Table of Contents (Continued)

2.8.2.8 Dryer Enclosure Collection Sump 20
2.8.2.9 Material Handling Building Collection Tank 20
2.8.2.10 Truck Turnaround Area Collection Sump 20
2.8.2.11 Truck Wash Collection Sump 21
2.8.2.12 Decontamination Pad Wastewater 21
2.8.2.13 Contact Storm Water Collected at the WTS 21
2.8.3 Noncontact Storm Water Outside the Pit Area 21
2.8.4 Contact Storm Water and Excavation Water from the Waste Pit Area 22
2.8.4.1 Contact Storm Water from Waste Pit 6 23
2.8.4.2 Contact Storm Water from Waste Pit 5 24
2.8.4.3 Excavation Water 24
2.8.4.4 Contact Storm Water from Haul Roads in the Waste Pit Area .. 25
2.8.4.5 Contact Storm Water in the Clearwell and Surrounding Areas .. 25
2.8.5 Noncontact Storm Water Inside the Pit Area 26
2.8.5.1 Noncontact Storm Water from Waste Pits 1, 2, and 3 26
2.8.5.2 Noncontact Storm Water from Waste Pit 4 26
2.8.5.3 Noncontact Storm Water from Areas Bordering the Waste Pits . 27
2.9 Water Treatment System (PFD M-65-10-001) 27
2.9.1 Solids Setting and Equalization 27
2.9.2 Initial pH Adjustment 28
2.9.3 Clarification 28
2.9.4 Sand Filtration 29
2.9.5 Ion Exchange 29
2.9.6 Final pH Adjustment 29
2.9.7 Effluent Discharge/Recycle 29
3.0 PROCESS CONTROL PHILOSOPHY 30
3.1 Waste Removal, Blending, and Preparation 30
3.2 Dryer Feed System (PFD D-10-10-001) 31
3.2.1 Operations 31
3.2.2 Instrumentation and Controls 32
3.3 Thermal Dryer Operation (PFD D-20-10-001) 33
3.3.1 Operations 33
3.3.2 Instrumentation and Controls 34

Table of Contents (Continued)

3.4 Gas Cleaning System (PFD D-50-10-001) 35
3.4.1 Operations 35
3.4.2 Instrumentation and Controls 37
3.5 Railcar Loadout and Lidding Operations (PFD D-35-10-001) 38
3.6 Water Treatment System 38

4.0 SAMPLING AND ANALYSIS 39
4.1 Sampling 40
4.2 Analyses 40

5.0 UTILITY REQUIREMENTS 43
5.1 Electricity 44
5.2 Caustic 44
5.3 Natural Gas 45
5.4 Fuel Oil 45
5.5 Compressed Air (Plant and Instrument) 45
5.6 Water (Potable and Process) 46
5.7 Fire Water 46
5.8 Cooling Water 46

List of Tables

4-1 Preliminary Sampling and Analytical Program

4-2 Parameters for Analysis for Samples from the M-5 Sampling Train

4-3 Parameters for Analysis for Samples from the MM-5 Sampling Train

4-4 Parameters for Analysis for Samples from the VOST

4-5 Continuous Emissions Monitors

List of Acronyms/Abbreviations

AASHTO	American Association of State Highway Transportation Officials
ABMA	American Bearing Manufacturers Association
ACGIH	American Conference of Government Industrial Hygienists
ACI	American Concrete Institute
ACM	Asbestos Containing Material
ACOE	United States Army Corps of Engineers
AFBMA	Anti-Friction Bearing Manufacturers Association
AGMA	American Gear Manufacturers Association
AISC	American Institute of Steel Construction
ALARA	As Low As Reasonably Achievable
ALTER	Accelerated Life Testing and Environmental Research Facility
AMCA	Air Movement and Control Association
ANS	American Nuclear Society
ANSI	American National Standards Institute
APC	Air Pollution Control
API	American Petroleum Institute
ARAR	Applicable or Relevant and Appropriate Requirement.
ARI	American Refrigeration Institute
ASCE	American Society of Civil Engineers
ASHRAE	American Society of Heating, Refrigeration and Air Conditioning Engineers
ASME	American Society of Mechanical Engineers
ASNT	American Society of Nondestructive Testing
ASTM	American Society for Testing and Materials
AWS	American Welding Society
AWWA	American Water Works Association
AWWT	Advanced Wastewater Treatment
BAT	Best Available Technology
BSL	Biodenitrification Surge Lagoon
CAM	Continuous Air Monitor
CBR	California Bearing Ratio
CDF	Commercial Disposal Facility
CEM	Continuous Emissions Monitor

000029

List of Acronyms and Abbreviations *(Continued)*

CEMA	Conveyor Equipment Manufacturers Association
CERCLA	Comprehensive, Environmental Response, Compensation, and Liability Act
CFR	Code of Federal Regulations
COC	Constituent of Concern
CPT	Cone Penetrometer Test
CRSI	Concrete Reinforcing Steel Institute
CRU	CERCLA/RCRA Unit
CWA	Clean Water Act of 1977, as amended
D&D	Decontamination and Dismantlement
DAC	Derived Air Concentration
DCD	Design Criteria Document
DEEP	Dewatering Excavation Evaluation Program
DOE	United States Department of Energy
DOE-NV	United States Department of Energy - Nevada Office of Operations
DOT	United States Department of Transportation
EJMA	Expansion Joint Manufacturers Association
ERDA	Energy Research and Development Administration
F	Fahrenheit
FDF	Fluor Daniel Fernald, Inc.
FEMP	Fernald Environmental Management Project
FERMCO	Fernald Environmental Restoration Management Corporation
FFCA	Federal Facilities Compliance Agreement
fpm	feet per minute
FS	Feasibility Study
FSAR	Final Safety Analysis Report
ft2	square foot (feet)
GCS	Gas Cleaning System
GFCI	Ground Fault Circuit Interrupter
GLC	Ground Level Concentration
gpm	gallons per minute
HEPA	High Efficiency Particulate Air (filter)
hr	hour
HVAC	Heating, Ventilation, and Air Conditioning

List of Acronyms and Abbreviations *(Continued)*

IEEE	Institute of Electrical and Electronics Engineers
IES	Illuminating Engineers Society
ID	Induced Draft
IPC	Inclined Plate Clarifier
ISA	International Society for Measurement and Control
IT	IT Corporation
kg	kilogram
kV	kilovolt
kVA	kilivolt-ampere
kW	kilowatt
lb	pound
LLRW	Low Level Radioactive Wastes
m^2	square meter
MAGLC	Maximum Allowable Ground Level Concentration
MAWC	Maximum Average Waste Concentration
MBMA	Metal Building Manufacturers Association
MCC	Motor Control Center
MEI	Maximally Exposed Individual
MHB	Material Handling Building
µCi/cc	microcurie per cubic centimeter
mrem	millirem
MSS	Manufacturers Standardization Society
NAD	North American Datum
NEC	National Electric Code
NEMA	National Electrical Manufacturers Association
NESHAP	National Emission Standards for Hazardous Air Pollutants
NETA	National Electrical Testing Association
NFC	National Fuel Code
NFPA	National Fire Protection Association
NP	Nonplastic
NPDES	National Pollutant Discharge Elimination System
NPH	Natural Phenomenal Hazard
NTS	Nevada Test Site

List of Acronyms and Abbreviations *(Continued)*

OAC	Ohio Administrative Code
OBBC	Ohio Basic Building Code
ODOT	Ohio Department of Transportation
Ohio	EPA Ohio Environmental Protection Agency
OSDF	On Site Disposal Facility
OSHA	Occupational Safety and Health Administration
OU	Operable Unit
PC	Performance Category
PCB	Polychlorinated Biphenyl
pcf	pounds per cubic foot
pCi/L	picoCuries per liter
PFD	Process Flow Diagram
PID	Photoionizing Detector
PPE	Personal Protective Equipment
psf	pounds per square foot
psi	pounds per square inch
PTI	Permit to Install
PTO	Permit to Operate
PVC	Polyvinyl Chloride
QAP	Quality Assurance Plan
RCRA	Resource Conservation and Recovery Act
RD	Remedial Design
RI	Remedial Investigation
RLB	Railcar Loadout Building
ROD	Record of Decision
SAE	Society of Automotive Engineers
SCQ	Sitewide CERCLA Quality Assurance Project Plan
SCS	Soil Conservation Service
SDI	Steel Deck Institute
sec	second
SJI	Steel Joist Institute
SMACNA	Sheet Metal and Air Conditioning Contractors National Association
SPT	Standard Penetration Test

List of Acronyms and Abbreviations *(Continued)*

SSC	Structure, System and Component
STD	Standard (DOE)
SWM	Solid Waste Management
SWPPP	FERMCO Storm Water Pollution Prevention Plan
TBC	To Be Considered
TBP	Tributyl Phosphate
TEMA	Tubular Exchanger Manufacturers Association
TOC	Total Organic Carbon
TSDF	Waste Treatment, Storage or Disposal Facility
UBC	Uniform Building Code
UCRL	University of California Research Laboratory
UL	Underwriters Laboratory
USCS	Unified Soil Classification System
USEPA	United States Environmental Protection Agency (EPA)
V	Volt
WAC	Waste Acceptance Criteria
WESP	Wet Electrostatic Precipitator
WPRAP	Waste Pits Remedial Action Project
WTS	IT Corporation Wastewater Treatment System
yd^3	cubic yard
yr	year

1.0 INTRODUCTION

The waste materials in the pits are to be excavated, treated and/or blended as necessary, and ultimately transported to an off-site Commercial Disposal Facility (CDF). The general steps and activities associated with fulfilling this processing are:

- Waste excavation and initial segregation
- Preparation of the excavated waste materials (i.e., sorting, blending, size reduction, etc.)
- Thermally drying some or all of the waste materials
- Blending of the processed material (e.g., Radiological WAC blending)
- Storage and loadout for transport to the CDF.

Rainwater and other waters associated with the excavation and processing of the materials will be controlled and treated as necessary. Dust control procedures will be followed at all project areas including the excavation, haul roads, and processing area. The thermal drying process, which will utilize an indirectly heated rotary dryer, requires that the materials be prepared and fed to the dryer, and that the emissions from the drying process be properly controlled with an off-gas cleaning system. Railcars utilized for hauling the processed wastes to the CDF will be properly prepared and maintained.

This document provides a description of the operations and processes involved in the excavation, preparation, and loadout of the waste materials for transport off site. Section 2.0 provides a description of each process step from waste excavation through loading of the railcars, including associated activities such as the control and treatment of storm and waste waters. Section 3.0 provides the process control philosophy associated with each of the process steps. Section 4.0 describes the sampling and analyses. Section 5.0 describes the utilities associated with the processing activities.

2.0 PROCESS DESCRIPTION

2.1 Waste Excavation

Waste excavation will begin upon receipt of the Authorization to Operate from FDF. Two or more waste pits will be excavated concurrently to provide feed for the radiological and moisture

content-based waste blending program. After initial segregation, the excavated materials will be transferred to the Material Handling Building.

The excavation of the various pits and Clearwell will be performed using conventional earth moving equipment. This equipment will include bulldozers, articulating dump trucks, track mounted excavators and long reach excavators. Access for mechanical excavation of pit materials will be from existing berms and covers, constructed access ramps or the pit bottom. Areas will be provided for moisture conditioning, nontypical waste staging, and nonprocessable waste staging.

As the waste pit excavations progress, sump areas adjacent to the excavation face will be used for dewatering of pit areas. To the extent possible, water removal from the waste will be accomplished via gravity drainage into the pit area low-point sumps prior to excavation and transportation to the waste processing area. All water collected within the excavations will be transferred to the Clearwell prior to treatment through the IT Wastewater Treatment System (WTS).

Additional information regarding excavation sequence, health and safety, material handling and segregation, and loading and hauling is presented in the Excavation Plan.

2.2 Waste Blending

Waste material blending, sampling, and analysis activities are described throughout the RD documents. The blending described is for the purpose of producing material which meets the CDF WAC for radiological and moisture constraints and is not for the purpose of diluting characteristically hazardous waste to render it nonhazardous. Unless stated otherwise, sampling and analysis described in the RD documents will be for radiological, moisture, or other WAC compliance characteristics other than RCRA. The analysis of samples for the determination of RCRA characteristic hazardousness will occur only on the material staged in the railcar storage bins prior to railcar loadout as described in Sections 2.7 and 4.2.

Blending of the waste material will occur in several locations. In the excavation areas, blending of waste materials from a single waste pit will be performed to produce a consistent material coming from the pit. In the Material Handling Building, material from multiple sources will be combined to meet waste acceptance criteria (WAC). In the Railcar Loadout Building,

nonprocessable material will be combined with dried waste in the railcars. The following sections detail the various waste handling and blending procedures.

During excavation, waste materials within the pit will be segregated into three categories:

- Nontypical waste
- Nonprocessable waste
- Processable waste.

Nontypical waste that does not meet the CDF WAC or cannot be treated to meet the CDF WAC will be stockpiled in the excavation areas and managed until the material is turned over to FDF for disposal. IT will transport the nontypical material to a designated area between Waste Pits 4 and 6, along the existing roadway, where the material can be containerized, transferred to FDF, and loaded into trucks outside the radiologically controlled area.

Nonprocessable waste is waste material that meets the CDF WAC but cannot be fed into the dryer. This type of waste may consist of debris that could not pass through a 4-inch screen such as rocks, wood, clumps of clay, etc. To the extent possible, nonprocessable waste will be segregated in the excavation areas and transported to the Material Handling Building separately.

Processable waste from a single source will be blended in the excavation, primarily on the basis of moisture content, to achieve a manageable material.

When excavated, wastes will be classified as low WAC or high WAC material, depending on the levels of radioactive constituents and other pertinent processing/disposal criteria. Historical surveys and investigations of each pit, the trend analysis from ongoing monitoring, and chemical analysis of waste materials as the remediation proceeds, will allow segregation of waste materials based on the levels of radioactive constituents. Wastes will be loaded into contained dump trucks (approximate 21-yard capacity) and transported from the pit area over the designated haul road to the Material Handling Building. Three trucks are expected to be making the continuous route at any given time, at an average rate of three trucks per hour up to a maximum rate of six trucks per hour.

Additional waste blending will occur in the Material Handling Building and Railcar Loadout Building. The blending of material from more than one source will occur in the mixing pits, located along the west side of the Material Handling Building. The blend ratios will be

determined in the field, and dump trucks will be directed to haul material from designated pits to the appropriate mixing pit to achieve a blended material that meets the WAC for railcar loadout. Front end mixing loaders will be used to blend the materials in the mixing pits. The material will be removed from the pits, screened to remove oversize materials, and stored in bins along the east wall of the building awaiting sampling and drying.

In the event that waste delivered to the mixing pits in the Material Handling Building from the excavation is not dry enough for convenient handling, waste material from OU1 Contaminated Soil Stockpile (typically drier material) or material that has been dried can be mixed with incoming material to improve consistency.

2.3 Waste Preparation (PFD D-15-10-001)

Process flow diagram (PFD) D-15-10-001 depicts handling of the excavated waste. All waste preparation will take place in the Material Handling Building. Waste preparation includes the receipt of excavated waste material from the pits, followed by blending, further separation by screening, and size reduction of material. Finally, a portion of the conditioned waste material will be selected for drying while the balance of the waste material will bypass the drier to be blended later with dried material prior to being transferred to the Railcar Loadout Building. Waste preparation activities will be conducted on a 1-, 2-, or 3-shift per day schedule. Sufficient storage will be provided in the Material Handling Building to support three shifts per day operation of the dryer and final blending operations.

2.3.1 Initial Waste Classification

Wastes will be received at the Material Handling Building from a number of sources as follows:

- Processable waste from the excavations as previously described,
- Certain nonprocessable waste such as pallets, wood boards, and similar wastes that may be considered shreddable will be transferred to the Material Handling Building. The shreddable material will be segregated inside the building prior to shredding,
- Used personal protective equipment, consisting mainly of disposable outer garments and expended air purifying respirator cartridges, will be sent to the Material Handling Building for processing as required to meet the WAC,

- Material from OU1 Contaminated Soil Stockpile will be conveyed across the rail spur into the Material Handling Building and will be stock piled in a designated bin.

Following segregation in the waste pit area, excavated material will be transferred at a rate of approximately 100 tons per hour, to one of two mixing pits in the Material Handling Building. A common sump, located to the south of the mixing pits, will collect free water runoff from the waste being received. The water collected in the sump will be pumped out as needed for processing through the WTS.

2.3.2 Initial Blending

Waste material will be removed from the mixing pits by a front end loader and moved to a blending area in the Materials Handling Building. The initial blending will serve two purposes: (1) to blend materials with high radioactive content and materials with low radioactive content in such proportions as to meet the off-site disposal facility WAC, and (2) attempt to achieve optimum moisture content without the need for processing through the dryer. This blending is not for the purpose of diluting characteristically hazardous waste to render it nonhazardous. Should both of the objectives of the initial blending operation be achieved, the blended wastes will be transferred directly to the Railcar Loadout Building for storage and sampling prior to loading into railcars for shipment to the off-site disposal facility without further processing. Production of WAC-compliant blends bypassing the dryer operations may be used as the principal method of production for some excavation phases. This mode of production is referred to as Alternative Waste Production.

2.3.3 Screening

Waste material will be screened with or without blending at the discretion of the IT Shift Supervisor. The primary objective of the screening operation is to properly size waste material for processing through the dryer. Three screening systems (H-1004A/B) are being evaluated for use in this operation. These are:

- A stationary 4-inch vibrating deck screen
- A rotating trommel-type screen
- An equipment-mounted rotating trommel-type screen.

Material handling equipment, such as a front end loader will be used to feed either of the screening devices. The screens will discharge both oversize and on-size materials to piles on the floor of the Materials Handling Building from which they will be moved by front end loaders (or

other material handling equipment). Oversize material may be separated visually into shreddable and nonshreddable waste. When such a separation is made, the shreddable waste will be moved to the storage area for shreddable material to await processing, while the nonshreddable waste will be segregated for size reduction and final blending with dryer-processed waste. Sized waste will be moved into bins on the east side of the building and held for processing through the dryer or for final blending with dryer-processed waste. Nonshreddable waste may be size-reduced in the pit area or the Material Handling Building using methods that may include cleavage of debris with equipment bucket/blade; runover by equipment track; cleavage with equipment mounted ram, jaws or other device; or flame cutting.

If an equipment-mounted rotating trommel-type screen is selected for this project, the waste will be picked up by the material handling equipment from the blending pile, the trommel screen closed, and the equipment will be moved to the selected storage bin where rotation will be started. Oversize material will be retained inside the rotating screen, while sized material will discharge through the screen into the bin. After each load of waste has been screened, the trommel device will be moved to the oversize material area, discharged, and the oversize handled as previously described.

2.3.4 Shredding

Waste material segregated and awaiting shredding will be processed in "campaigns" when sufficient material for shredding has accumulated. Shredding will be accomplished using a stationary, low-speed shear debris shredder (M-1001). Wastes will be moved out of the holding bin and into the shredder feed hopper using conventional material handling equipment. The shredded material will be discharged onto the floor of the Materials Handling Building. It will be picked up by the material handling equipment and transferred to a segregated area to await final blending with dryer-processed waste.

2.3.5 Dust Control

Water sprays will be used at stationary equipment transfer points in the waste preparation area to control dust. In general, the moisture content of the waste material received at the waste preparation area is expected to be high enough to prevent dusting during processing. Water sprays will be available, however, to suppress dust in the event that some material handling systems require dust suppression. Sumps in the floor of the Materials Handling Building will collect any free moisture from the dust suppression sprays and from housekeeping activities. The collected water will be discharged to the Clearwell for subsequent treatment in the WTS.

2.3.6 Waste Processing

The majority of the waste material is expected to require drying. However, a greater or lesser amount may be dried, depending upon actual waste condition in the pits upon excavation. Since these waste materials will ultimately be landfilled, proper moisture is critical to achieving adequate compaction when placed in the landfill. Uniformity and dryness are also necessary in handling to prevent bulking, cementing, or hold up in railroad cars during unloading.

2.3.7 Final Blending

Material loaded out in railcars must meet the WAC for the disposal facility. Wastes will be blended to meet moisture and radiological criteria and to maximize efficient loading of railcars. As noted earlier, most of the waste will be processed through the thermal dryer since it contains a significant overall excess of water. Some of the wastes including the pit soil caps and certain materials stockpiled in the OU1 Contaminated Soil Stockpile area are expected to be near optimum moisture as excavated. These materials may be loaded as is or reserved for blending.

The material exiting the dryer may be further mixed with material that has bypassed the drying step. Further blending before or after the dryer can be utilized to improve/ensure the blend quality of the final product.

The average bulk density of waste material loaded out into the railcars is expected to be 1.23 tons per cubic yard.

2.4 Dryer Feed System (PFD D-10-10-001)

PFD D-10-10-001 depicts operations for waste materials fed from the waste preparation area into the dryer. The PFD depicts a stream for feeding sludge material to the dryer. A front end loader will be used to transfer solid waste materials from the staging bins to the feed hopper and mass flow screw feeder (H-1001). The feed screw has a variable speed control. Material is transferred from the mass flow screw feeder to the belt feed conveyor (H-1002) which includes a belt scale (Z-1001). The speed of the mass flow feeder is automatically controlled to adjust the mass rate of waste material being fed as measured and indicated by the belt scale. The feed material discharges from the belt feed conveyor into the dryer feed screw (H-1003) that extends into the dryer. The screw feeder provides a positive feed mechanism to assure uniform transfer of the material into the dryer, and it also provides a positive seal that limits the amount of infiltration air into the dryer.

2.5 Thermal Dryer Operation (PFD D-20-10-001)

Drawing D-20-10-001 depicts operations for waste materials being received from the waste preparation area and processed through the dryer. In addition, the PFD shows utilization of waste heat from the dryer and the dryer furnace combustion gas discharge system. The following is an operational description of these processes.

An indirectly heated rotary dryer (F-2001) receives and processes wet waste material of various moisture contents, depending on the type of waste. The design basis moisture content is 40 percent (wet basis). The dryer reduces the moisture content of the waste materials to 10 percent (wet weight basis). Waste materials are fed to the dryer primarily as solids through the feed screw (Stream 201). The feed screw extends inside the dryer to deposit wet waste within the heated zone.

The rotary dryer system consists of a cylindrical shell rotated with a variable speed drive. The rotating cylinder is heated externally by a furnace with adequate length and diameter to satisfy heat transfer requirements. Using natural gas or #2 fuel oil as fuel for combustion, heat energy for the indirect drying is produced in multiple furnace zones by a set of burners located in each zone. Burners are operated with adjustable primary air/fuel ratio and secondary air addition to control the flame temperature so the rotating cylinder does not exceed its design temperature. Air to the burners is supplied by the combustion air fan (B-2002). Burners are equipped to utilize either natural gas or fuel oil.

Exit gases from each furnace zone are collected into a header, and then routed through a recuperative heater (E-2001). The recuperative heater preheats clean, outside air supplied by the air supply fan (B-2001) for use as dryer sweep air (Stream 205) and furnace combustion air (Stream 204). Combustion gases from the recuperative heater are cooled in the spray quench (J-2001) using cooling water. Furnace stack gas is drawn through the recuperative heater and spray quench by the furnace induced draft fan (B-2003) and then discharged out of the furnace stack (X-2001).

Heat energy from each furnace zone is indirectly transferred to the material advancing inside the rotating shell. A means to mechanically remove wastes that stick to the sides of the drum is also provided to reduce fouling and maintain effective heat transfer.

The indirect rotary dryer has multiple furnace zones and is provided with individual temperature control of each zone. This ability to control the temperature throughout the dryer provides flexibility and simplicity in drying wastes with varying levels of incoming moisture content to achieve the desired moisture content in the dried product. It is anticipated that the dryer shell temperature may vary from 1200NF to 1700NF.

The slope and speed of the cylinder's rotation determine the retention time in the dryer. The slope is fixed, but the rotation speed is variable and is used to adjust the retention time as necessary, providing additional control of the drying process.

The preheated sweep air is introduced to the dryer in a countercurrent fashion to aid in both heating the waste and carrying the water vapor produced during the drying process through the off-gas treatment system. After exiting the dryer, the process off-gas stream (Stream 211) is routed to the gas cleaning system as shown on PFD D-50-10-001.

The dryer product (Stream 212) is discharged through the product conveyor (H-3001). An enclosed drag flight conveyor will be used for this application. Atomized water sprays will be utilized at the outlet of the conveyor to control dust as required.

2.6 Gas Cleaning System (PFD D-50-10-001)

PFD D-50-10-001 presents the process design for the cleaning of the off-gases from the dryer operation. The PFD also indicates the various solid and liquid purge streams from the gas cleaning process.

The off-gas from the dryer initially passes through the parallel high efficiency cyclone separator (S-5001) to remove large, entrained particulate. The solids removed from the off-gas are transferred from the cyclone via the cyclone solids transfer screw (H-5001) to the dryer feed system and mixed with wet incoming feed materials. This design mitigates dust generation and minimizes worker exposure as defined in the ALARA concept.

The off-gas from the cyclones is cooled in the spray quench tower (E-5001) to cool the dryer off-gas and partially condense most of the water vapor generated by the drying process. The condensing spray water is recirculated to minimize the amount of cooling water required. The water and condensate pass from the quench tower into a settling tank (T-5003) from which the

spray quench recirculating pump (P-5008) pumps the recycle water into the sprays in the quench tower.

The off-gas from the spray quench flows to the contact scrubber (S-5004). Scrubber water is recirculated through the contact scrubber via the contact scrubber recirculating pump (P-5003). This recycle water is cooled in the noncontact scrubber heat exchanger (E-5002) to further cool the off-gas. A secondary heat exchanger (E-5003) is used to provide additional cooling of the scrubber recycle water during warmer weather. Cooling the off-gas to approximately 100EF reduces the moisture and residual organic contents in the off-gas, which improves the performance of the downstream HEPA filters (S-5007 and S-5008) and carbon adsorption unit (S-5006). The scrubber recirculating chiller (Z-5001) and chiller recirculating pump (P-5010) are used to provide the cooling media for the secondary heat exchanger. Sodium hydroxide (caustic) from the caustic tank (T-5002) is added to the scrubber recycle stream to remove and neutralize acid gases from the off-gases. Condensate and recycle water flow from the scrubber to the settling tank.

Some of the condensate, including organic condensate, is purged from the system by an overflow in the settling tank. Caustic is metered into the settling tank to control the pH of the recycle water to neutralize the portion of any acid gases removed in the quench. The hydroclone recirculating pump (P-5007) pumps a side stream of the recycle water from the settling tank through the hydroclone system (S-5009) and back into the settling tank. The hydroclones remove most of the suspended solids from the recycle water, with the solids being purged with part of the condensate. The purges from the hydroclones and the settling tank flow to the oil/water separator (Z-7003) presented on PFD D-70-10-001.

A cooling tower (W-5001) and second recirculating cooling water loop is used as the cooling medium for the contact scrubber heat exchanger. Cooling water is recycled by the cooling water recirculating pump (P-5001) from the cooling tower through the heat exchanger back to the tower. A small purge stream is discharged from the cooling tower to the Clearwell. This water has not contacted contaminated materials and is not expected to be contaminated. (This stream is discussed in the request to route process water to the Clearwell given in Section 2.8.1.9.)

The off-gas from the contact scrubber flows through the low-pressure differential venturi scrubber (S-5002) and the mist eliminator (S-5003). The venturi removes more of the particulate from the off-gas. Scrubbing water is recirculated through the venturi by the venturi recirculating

pump (P-5002). Entrained water from the venturi is removed from the off-gas in the mist eliminator and drains to the venturi sump (T-5001). Excess scrubbing water is purged from the venturi sump and pumped to the oil/water separator.

Off-gas from the mist eliminator flows into the wet electrostatic precipitator (WESP) (S-5005) for the removal of residual particulate. A small stream of water is continuously sprayed into the off-gas as it enters the WESP. Water and particulate collected in the WESP are drained to the venturi sump and pumped to the oil/water separator.

The off-gas from the WESP is slightly reheated in the electrically heated off-gas reheater (E-5004) in order to prevent any condensation in the HEPA filters or carbon adsorber. The induced-draft fan (B-5001) is used to pull the off-gases through the system from the dryer through the WESP, keeping the entire system under negative pressure so that any leakage is into the system. The HEPA filters are mounted in parallel with only one being used at a time, with the other on standby or being replaced as necessary. The HEPA filters remove particulate greater than 0.3 microns that may have passed through the WESP. The carbon adsorber (S-5006) removes organic vapors which have not been condensed and removed by the other gas cleaning system components. The clean off-gas from the system is released to the atmosphere through the vent stack (X-5001). Point Source Emission estimates are discussed in the Point Source Emission section of this design package.

An optional Thermal Oxidizer (F-5001) is shown in parallel configuration with the carbon bed and may be operated in lieu of the carbon bed in the event that volatile organic compound (VOC) concentrations cause rapid exhaustion of the carbon bed. The Thermal Oxidizer provides an effective means for the treatment of VOCs in the gas stream.

The condensed and purged liquids from the GCS are directed through the oil/water separator shown on PFD D-70-10-001. The water fraction will be routed to the WTS influent tank for pretreatment prior to discharge to the BSL and the AWWT system. The oil fraction will be handled in the following manner. If the characteristics of the oil fraction do not meet CDF WAC, it will be turned over to FDF for subsequent handling and disposal. Otherwise, the oil fraction will be utilized for dust suppression at the dryer discharge conveyor, or blended directly back into the waste for disposal along with the other pit waste at the CDF.

2.7 Railcar Loadout and Lidding (PFD D-35-10-001)

PFD D-35-10-001 depicts the transfer of blended materials from the Material Handling Building to the storage bins in the Railcar Loadout Building. The material is transferred using conventional rubber-tired front end loaders. During storage bin filling, sampling of the material is undertaken per the Sampling and Analysis Plan and a composite sample is obtained such that the filled bin is characterized to meet the CDF WAC. The filled bins have a storage capacity of 600 tons approximately. The bin capacity should accommodate filling six rail road cars. Each rail road car will have a unique identification number and will correspond to the Certificate of Analysis from the bin in which it was loaded.

In the unlikely event that sampling and analysis indicate that a material in a storage bin does not meet the CDF WAC due to radiological or moisture content, the material will be removed from the bin and reblended with other materials to meet the WAC. If a material is determined to be RCRA characteristic waste, it will be turned over to FDF for subsequent handling and disposal.

Railcar Loading. Railcar loading will be supervised from an enclosed elevated control position located on the east side of the Railcar Loadout Building adjacent to the rail weigh scale and directly in front of the loadout area. The Loadout Supervisor will be in radio or visible contact with the personnel involved in moving the railcars, lid removal, liner installation, waste loading, liner sealing, lid replacement, and decon and survey activities. The supervisor will also be monitoring for dust generation and will have the ability to activate the dust suppression system if required. The supervisor will be responsible for completing the necessary documentation relating to the weight of each railcar and identifying from which storage bin each railcar is filled. A conventional front-end loader will remove the material from the characterized bin certified in meeting the WAC and place it evenly distributed in the railcar until the maximum cargo weight is achieved. The maximum cargo weight is 108.17 tons. Debris meeting the WAC will be placed in the railcar utilizing a front-end loader along with the waste per the constraints of the WAC.

Railcar Lining. Railcars will be lined with a material that will help contain waste in the event of an incident. The linings will be constructed to resist tearing during normal loading operations. The liners will be stored in the lid/liner storage area and transferred to the liner installation area utilizing a pallet jack. The liner will be placed and secured in the railcar and will be overlapped over the side of the railcar adjacent to the loadout position. The overhung liner will protect the

railcar siding from contamination in the event of spillage during the loadout operation. Once the loadout is complete, the liner is folded over the waste and secured.

2.7.1 Railcar Loadout and Lidding Operations

These operations involve moving four railcars at a time utilizing a track mobile. The railcars will enter the loadout building at the northeast corner (through the rail decon area). For discussion purposes, the first car that enters the building is referred to as Car 4, with all cars that follow being referred to in a descending numerical order because the last car to enter the building will be the first car to leave the building. Each car will proceed through five operations necessary for completion of loadout. These operations include:

- Lid removal and inspection
- Railcar lining
- Loadout
- Lidding and decontamination
- Radiological survey.

The following is a step-by-step description of the operation in the Railcar Loadout Building:

Step 1. As the railcars pass through the decontamination area, the lids will be removed and visually inspected to assess their condition and to identify any damages.

- If the lid is in good condition, it will be placed in a rack located within the decon area and stacked/stored until the lid replacement step, after railcar loadout is completed.

- If a lid requires repair, it will be placed back on Car 1. The railcars then move to the liner and lid repair area at the southern end of the building where damaged lids will be removed as needed for repair.

Step 2. Once all of the lids are removed, either in the decon area or the liner and lid repair area, the cars will be moved to the liner and lid repair area. Car 1 is positioned in the lining area and lined, with Cars 2, 3, and 4 awaiting lining.

Step 3. The cars will advance so that Car 1 is awaiting loadout, Car 2 is being lined, and Cars 3 and 4 are awaiting lining.

Step 4. The cars will advance so that Car 1 is positioned on the scale in front of the loadout pad and filled to the desired weight, while Car 2 is awaiting loadout. Car 3 is lined, and Car 4 is awaiting lining. Following filling, the liner on Car 1 will be folded inward and sealed as required.

Step 5. The cars will advance so that Car 1 is in the decon area where a lid will be placed back on the car, and the outside of the car deconned as required. Car 2 is filled and weighed, Car 3 is awaiting loadout, and Car 4 is lined.

Step 6. Car 1 will advance out of the decon area to a dedicated holding area to await radiological survey results. Car 2 is lidded and deconned, Car 3 is filled and weighed, and Car 4 is awaiting loadout.

Step 7. The cars will advance so that Car 2 awaits decon results in the holding area, Car 3 is covered and deconned, and Car 4 is filled and weighed.

Step 8. The cars will advance so that Car 3 awaits decon results in the holding area and Car 4 is covered and deconned.

Step 9. The cars will advance so that Car 4 awaits decon results in the holding area.

Step 10. Once that the cars are verified for radiological release, FDF will transfer them to the on-site rail yard to await shipment off site.

2.7.2 Railcar Rejection at the CDF

In the event that a railcar is rejected at the CDF, measures may be taken at the CDF to render compliance with the WAC. If unsuccessful, the railcar will be returned to the FEMP because its contents do not pass the WAC, then the railcar will be unloaded in the load out area. Unloading will be done with conventional earth-moving equipment during an off-shift. If this unloading results in the liner being uncapable of containing the waste (i.e., if it is ripped or torn), it will be folded into the railcar and a new liner will be installed over it. If the material was rejected because of radiological content or moisture, it will be reblended with other pit waste until it satisfies the CDF WAC. If the material is rejected because of RCRA characteristics, it will be unloaded and turned over to FDF for handling and disposal.

2.8 Water Management (PFDs M-65-10-001 and M-90-10-001)

Water management at the WPRAP site consists of collecting, sampling, treating (as necessary) and discharging water from multiple sources. Proper water management is a key part of project operations and is critical to waste excavation. The following sections discuss site water based on where the water originates and how the water must be handled. The water being managed during the WPRAP is separated into the following categories:

- Process wastewater
- Nonprocess wastewater and contact storm water outside the waste pit area
- Noncontact storm water outside the waste pit area
- Excavation water and contact storm water inside the waste pit area
- Noncontact storm water inside the waste pit area.

The following definitions are used in this document during discussion of water management:

- **Perched Water.** Subsurface water occurring in the glacial overburden. Perched water that seeps through the sidewalls of the excavations is referred to as "seepage."

- **Contact Storm Water.** Storm water that contacts raw waste material within an open excavation; storm water that lands on the water cover of the Clearwell, Waste Pit 5, and Waste Pit 6; and storm water that contacts potentially contaminated surfaces (e.g., haul roads, contaminated concrete pads, and roads).

- **Noncontact Storm Water.** Storm water that does not contact any raw waste or potentially contaminated surfaces. Examples include roof drains, storm water that lands on covered sections of the waste pits and is diverted to the K-65 Runoff Basin, and storm water that falls on the ground outside the waste pit area and is diverted to the Storm Water Management (SWM) Pond or to existing drainage swales. This water will require monitoring to verify that it is noncontaminated.

- **Excavation Water.** The combined water pumped from an excavation to the Clearwell. This is composed of contact storm water, drainage from excavated materials, and perched water seepage into the excavation.

- **Nonprocess Wastewater.** Water streams requiring pretreatment by the IT Wastewater Treatment System (WTS) and/or discharge to the BSL and treatment by the FDF Advanced Wastewater Treatment (AWWT) Facility. Examples include laboratory wastewater, laundry wastewater, personnel decontamination shower wastewater, respirator wash water, drainage water and excess dust suppression spray collected in the sumps in the buildings, and decontamination water.

- **Process Wastewater.** Wastewater resulting from the Air Pollution Control (APC) system and WTS. Examples include Venturi scrubber blowdown, WTS backwash water, and cooling tower blowdown.

- **WTS.** The IT WTS will be used to pretreat water as necessary prior to discharge to the BSL and subsequent treatment in the AWWT Facility.

Portions of the water management activities described in this document refer to the placement of various water and wastewater streams into Waste Pit 5, Waste Pit 6 and the Clearwell. These descriptions constitute a request to the Ohio EPA in accordance with the 1988 Consent Decree. The following possible flow patterns are included in this request:

- FEMP fire water to the water covers on Waste Pits 5 and 6
- Waste Pit 6 storm water to the Clearwell
- Excavation water to the Clearwell or Waste Pit 5
- WTS backwash/recycle water to the Clearwell
- Nonprocess wastewater to the Clearwell
- Cooling Tower blowdown water to the Clearwell
- Noncontact storm water from the SWM Pond to the Clearwell.

The request to route these waters as described is put forth for the following reasons:

- All water streams being managed within OU1 (with the exception of FDF fire water, and FDF potable water supplies) originate from the waste pits or from the remediation of the waste pits.

- FDF fire water and FDF potable water is uncontaminated and will only be added to Waste Pits 5 and 6 as needed to manage the water covers.

- The only process wastewater streams that would be sent to the Clearwell are cooling tower blowdown (which is a noncontact stream and should be clean), backwash water (which is previously treated water from the WTS containing suspended solids from the WTS filters and resin beds), and recycle water (which is partially treated water from the WTS which may not or does not meet the BSL WAC).

- The Clearwell provides a logical surge capacity for water that must be pretreated by the WTS. Construction of an alternate surge point for these streams would be very impractical.

The following sections discuss management of the five site water categories given above. Routing of water to the Clearwell (part of the request to the Ohio EPA explained above) is included in these sections where appropriate.

2.8.1 Process Wastewater

The following is a list of process wastewater sources:

- Cooling tower blowdown water
- Water purged from the APC system oil/water separator
- Backwash/recycle water from the IT WTS.

These streams will remain relatively constant throughout operations at the site and are not expected to change during the various excavation phases. The sections below describe the method by which the water will be collected and transferred to the WTS, the expected flow rate, and notes on the chemical composition of each stream.

2.8.1.1 Cooling Tower Blowdown Water

A blowdown stream from the cooling tower in the dryer system will be routed to the Clearwell for subsequent treatment by the WTS. This stream is expected to be approximately 40,320 gpd and is not expected to contain contaminants at levels higher than the BSL WAC.

2.8.1.2 Oil/Water Separator Discharge

Process water generated by the APC system associated with the thermal dryer will be combined and routed through an oil/water separator for removal of any free-phase organics. The aqueous stream from the oil/water separator will be pumped to the influent tank in the WTS. This stream is not expected to exceed 47,520 gpd.

2.8.1.3 Backwash/Recycle Water from the WTS

Water generated during the backwashing of the sand filter and ion exchange beds in the WTS is piped to flow directly to the Clearwell. The line pressure supplied by the backwash will be sufficient to transfer the water to the Clearwell, no additional pump is necessary. The average flow of backwash water from the WTS to the Clearwell is approximately 15,000 gpd. This stream will have a high suspended solids concentration.

Recycle water is partially treated water from the WTS which may not or does not meet the BSL WAC. Partially treated water may be diverted to the Clearwell during startup of the WTS or at times during which it is suspected that the WTS effluent does not meet the BSL WAC. This stream may also include water collected in the WTS containment area. Recycle water has an intermittent flow.

2.8.2 Nonprocess Wastewater and Contact Storm Water

The following is a list of nonprocess wastewater and contact storm water sources that originate outside the pit area:

- Laundry water
- Changeout facility decontamination shower water
- Laboratory wastewater
- Material handling building collection sumps
- Railcar loadout building decontamination sumps
- Dryer enclosure collection sump
- Truck turnaround area collection sump
- Truck wash collection sump
- Decontamination pad water
- Storm water collected at the WTS.

These streams will remain relatively constant throughout operations at the site and are not expected to change during the various excavation phases. The sections below describe the method by which the water will be collected and transferred, the expected flow rate, and notes on the chemical composition of each stream.

2.8.2.1 Laundry Water

Wastewater from the washing machines in the laundry facility will flow by gravity from the laundry facility to the Grey Water Collection Tank as needed. The laundry facility will generate approximately 750 gpd average over a seven-day week. Because the clothes being washed are worn under PPE, the laundry water is not expected to contain contaminants at levels higher than the BSL WAC.

2.8.2.2 Respirator Wash Water

Wastewater from the respirator wash facility will flow by gravity from the respirator wash facility to the Grey Water Collection Tank. The respirator wash facility will generate approximately 100 gpd average over a seven-day week. Because the cartridges of the respirator will be

disposed of prior to cleaning, the wash water is not expected to contain contaminants at levels higher than the BSL WAC.

2.8.2.3 Changeout Facility Shower Water

Wastewater from the personnel decontamination showers in the changeout facility will flow by gravity from the changeout facility to the Grey Water Collection Tank. The changeout facility will generate approximately 860 gpd average over a seven-day week. Because personnel will be wearing PPE when exposed to material from the waste pits, the decontamination shower water is not expected to contain contaminants at levels higher than the BSL WAC.

2.8.2.4 Grey Water Collection Tank

Wastewater from the laundry facility, the respirator wash facility, and the decontamination showers in the changeout facility will flow by gravity to the Grey Water Collection Tank. The tank will be buried between the laundry and respirator wash facilities to allow for gravity flow from the three buildings via buried lines. The tank will contain a submersible pump and a series of three level switches for pump on and off and high-level alarm. The pump discharge line will be equipped with a flow meter/totalizer to track discharge. The tank will collect an approximate average of 1,710 gpd. The discharge pump will transfer water from the tank to the BSL. The water is not expected to contain contaminants at levels higher than the BSL WAC. A monitoring program will be established for the Grey Water Collection Tank effluent discharge to the BSL. Details of the monitoring program will be given in the Sampling and Analysis Plan.

2.8.2.5 Laboratory Wastewater

Wastewater generated in the on-site laboratory will be pumped directly to the BSL for subsequent treatment by the AWWT. This wastewater is generated as a result of analytical activities. The average flow rate from the laboratory is not expected to be greater than 100 gpd. The water is expected to meet the BSL WAC. The water line to the BSL will be equipped with a flow meter/totalizer to track discharge. A monitoring program for this wastewater stream will be developed. Details of this program will be defined in the Sampling and Analysis Plan.

2.8.2.6 Material Handling Building Collection Sumps

The Material Handling Building will contain at least three collection sumps. Water from the material being handled in the mixing pits will collect in a sump to the south of the pits. The trench from the mixing pits to the sump will include a weir to minimize the accumulation of solids in the sump. Water draining from material stock piles in the bins along the east wall of the

building will be collected by an open trench behind the storage bins. This trench will be sloped to a sump in the center of the trench. The connection between the trench and the sump will include a weir to minimize the accumulation of solids in the sump. A third sump will be located in the southwest portion of the building where the material discharged from the dryer reenters the Material Handling Building. The floor in this area will be sloped to drain free water to the collection sump. Each collection sump will contain a single sump pump and will transfer water to the Material Handling Building Collection Tank. The average flow rate from the three sumps in the Material Handling Building is not expected to be greater than 16,000 gpd average.

2.8.2.7 Railcar Loadout Building Decontamination Sumps

The Railcar Loadout Building contains two decontamination sumps. Water from railcar decontamination and excess water from dust suppression spraying will be collected by these sumps. Each sump will contain a dedicated sump pump. The sump pumps will transfer the water to the Material Handling Building Collection Tank. The average flow rate from the Railcar Loadout Building is not expected to be greater than 1,200 gpd.

2.8.2.8 Dryer Enclosure Collection Sump

The floor in the Dryer Enclosure is sloped to drain to a collection sump. Water draining from material in the building and excess water from dust suppression spraying will be collected by this sump. The sump pump will transfer the water to the Material Handling Building Collection Tank. The average flow rate from the sump is not expected to be greater than 1,000 gpd.

2.8.2.9 Material Handling Building Collection Tank

Wastewater from collection sumps in the Material Handling Building, the Railcar Loadout Building, and the Dryer Enclosure will be pumped to the Material Handling Building Collection Tank. The tank will be an above ground storage tank with an open top, located along the wall in the Material Handling Building. The tank will have a horizontal centrifugal pump mounted outside the tank, and the level in the tank will be monitored. The tank will collect an average of 18,200 gpd. The discharge pump will transfer water from the tank to the Clearwell.

2.8.2.10 Truck Turnaround Area Collection Sump

The Truck Turnaround Area is sloped to drain to two low points: one in the center of the open eastern portion (an area of approximately 26,450 ft^2) and the other at the west end of the haul road portion of the area (an area of approximately 8,450 ft^2). Contact storm water and excess dust suppression spray landing in the Truck Turnaround Area will be collected in two catch

basins that are tied together below grade. Water will be pumped from a sump tied to the basins to the Clearwell through a line buried along the southern edge of the Turnaround Area. The average flow rate is not expected to be greater than 1,800 gpd.

Storm water and excess dust suppression spray landing in the haul road leading to the Truck Turnaround Area will drain to a collection sump adjacent to the Truck Wash and Personnel Boot Wash. The average flow from this haul road to the Truck Wash sump is approximately 600 gpd.

2.8.2.11 Truck Wash Collection Sump

The Truck Wash and Personnel Boot Wash area is curbed and sloped to drain to a collection sump. Decontamination water, contact storm water landing in the area, and excess water from dust suppression spraying will be collected by this sump. In addition, water from the haul road leading to the Truck Turnaround Area will flow by gravity through a buried line to this sump. The Truck Wash sump pump will transfer the water directly to the Clearwell. The average flow rate of decontamination water and contact storm water from the Truck Wash pad is not expected to be greater than 400 gpd. The average combined flow from the haul road and the Truck Wash is not expected to be greater than 1,000 gpd.

2.8.2.12 Decontamination Pad Wastewater

The Decontamination Pad located immediately south of the Truck Turnaround Area is sloped to drain to a collection sump. Wash water and contact storm water from this pad will be collected by the Truck Turnaround Area sump. The average flow rate from the pad is not expected to be greater than 1,500 gpd.

2.8.2.13 Storm Water Collected at the WTS

The area surrounding the WTS will be contained to collect storm water from the WTS area and to act as secondary containment for the WTS. The area (approximately 6,400 ft^2) will be graded to allow water to drain to a sump. Water will be transferred from this sump to the Clearwell or WTS influent tank. The average flow rate is not expected to be greater than 500 gpd.

2.8.3 Noncontact Storm Water Outside the Pit Area

Storm water collected from certain areas within IT's work area in OU1 is not expected to contact contaminated materials. These areas include:

- The ground west and south of the Railcar Loadout Building, including the area around the warehouse and the laboratory
- The access road that runs along the north and east sides of the BSL
- The ground outside the waste pit area between Waste Pit 4 and the BSL, including the area around the trailers
- The roofs of the Material Handling Building, the Railcar Loadout Building, and the Dryer Enclosure

Storm water from these areas is not expected to be contaminated and, therefore, should not require treatment in the WTS or the AWWT. Storm water from the area identified in the first bullet will flow directly to Paddys Run. Storm water from the area identified in second bullet will flow to the K-65 Runoff Basin. Storm water from the areas identified in the third and fourth bullets will be collected by a series of collection basins and will be directed to the SWM Pond. During construction of the Truck Turnaround area and the Material Handling Building, one or more of the catch basins will be closed to keep contact storm water from this area from entering the SWM Pond during facility operation. Roof drains from the Material Handling Building and the Railcar Loadout Building will be directed into the SWM Pond. Roof runoff from other WPRAP buildings and structures may be directed to the collection basins or to other surface drainage features.

A monitoring program will be established for the SWM pond consistent with the requirements of the SWPPP to allow discharge of this water directly to Paddys Run. If suitable for discharge, the water will be pumped directly to the drainage swales that lead to Paddys Run. If not suitable for direct discharge to Paddys Run, the water will be transferred to the Clearwell, WTS, or directly to the BSL. Water collected in the SWM pond may alternatively be used for dust suppression, Waste Pit 5 or Waste Pit 6 water cap management, or makeup water to the dryer. Details of the SWM pond monitoring program will be given in the Sampling and Analysis Plan.

In the event of a 25-year, 24-hour storm event, the water in the SWM Pond naturally overflows to a series of smaller ponds north of the SWM Pond and eventually to drainage swales along the north boundary of OU1 to Paddys Run.

2.8.4 Contact Storm Water and Excavation Water from the Waste Pit Area

The following is a list of wastewater sources that originate inside the pit area:

- Contact storm water from Waste Pit 6
- Contact storm water from Waste Pit 5
- Contact storm water, drainage water, and perched water seepage in the excavation area (collectively referred to as excavation water)
- Contact storm water from haul roads in the waste pit area
- Contact storm water from the Clearwell and surrounding portions of Waste Pits 1 and 3 (which drain to the Clearwell).

Handling of these streams will change as the areas where the water originates are excavated and subsequently deemed clean. The sections below describe the method by which the water will be collected and transferred to the appropriate destination, the expected flow rate, and notes on the chemical composition of each wastewater stream.

2.8.4.1 Contact Storm Water from Waste Pit 6

During excavation Phases 1 through 7, the water cap on Waste Pit 6 will be maintained. The only source of water entering Waste Pit 6 is storm water that falls within the limits of the pit (an area of approximately 0.74 acres or 32,234 ft^2). Water is drained from the pit using a portable pump. Typically, the water will be pumped from the pit to the Clearwell for subsequent treatment by the WTS. The average flow rate is not expected to be greater than 2,210 gpd. In the event the water meets the BSL WAC, the water can be transferred directly to the BSL.

In the event of a 25-year/24-hour storm event, the freeboard in the pit will be used to manage the storm water (4.8 inches). Managing the water level in Waste Pit 6 may also involve adding water to the pit during especially dry periods, although this is not common. Water must be added to the pit when the level drops to a predetermined low level.

Beginning in excavation Phase 8, the water cap on Waste Pit 6 will be pumped to the Clearwell for subsequent treatment in the WTS to facilitate excavation. For Phases 8 through 11 of the excavation and during the six-month period prior to certification of the pit as "clean," any storm water that lands in the open section of the pit and perched water seepage into the excavated portion will be handled as described in Section 2.8.4.3. Storm water from the portion of the pit covered with Poly-Shell can be handled as before and pumped to the Clearwell or BSL if dikes are in place to keep it out of the excavation areas. After the pit has been certified as "clean,"

storm water landing in Waste Pit 6 will be treated as noncontact storm water and will be directed to Paddys Run or the K-65 Runoff Basin.

2.8.4.2 Contact Storm Water from Waste Pit 5

During excavation Phases 1 though 8, the water cap on Waste Pit 5 will be maintained. The only source of water entering Waste Pit 5 is storm water that falls within the limits of the pit (an area of approximately 3.74 acres or 162,914 ft^2). Water is drained from the pit through a concrete "well" structure located near the southwest corner of the pit. The "well" is equipped with several slide gate valves which act as weirs to control the water level in the pit. Water that drains into the "well" flows by gravity through a buried line to the Clearwell. The average flow rate is not expected to be greater than 11,170 gpd.

In the event of a 25-year/24-hour storm event, the freeboard in the pit will be used to manage the storm water (4.8 inches). Managing the water level in Waste Pit 5 may also involve adding water to the pit during especially dry periods, although this is not common. Water must be added to the pit when the level drops to a predetermined low level.

Beginning in excavation Phase 9, the water cap on Waste Pit 5 will be pumped to the concrete "well" for drainage to the Clearwell for subsequent treatment in the WTS. When the water has been removed, the surface of the material in the pit will be sprayed with Poly-Shell (or equivalent). For Phases 9 through 18 of the excavation and during the six-month period prior to certification of the pit as "clean," any storm water that lands in the open section of the pit and perched water seepage into the excavated portion will be handled as described in Section 2.8.4.3. Storm water from the portion of the pit covered with Poly-Shell must be pumped to the concrete "well" for drainage to the Clearwell. After the pit has been certified as "clean," storm water landing in Waste Pit 5 will be treated as noncontact storm water and will be directed to Paddys Run or the K-65 Runoff Basin.

2.8.4.3 Excavation Water

During the excavation of a waste pit, several means will be employed to reduce the amount of contact storm water in the excavation area. These methods include: (1) minimization of exposed material surface; (2) excavating from a high area to a low area to allow continued drainage of untouched areas within the pit; and (3) where necessary, placement of berms around open areas to minimize run-on. The excavation sequence and the details of the excavation process for each phase are described in the Excavation Plan.

Water from the open excavations will consist of contact storm water, free drainage from excavated materials, and perched water seepage into the excavation. The amount of water generated will change constantly during the excavation process. The water in the excavations will be diverted to "sumps" by grading the bottom of the excavations and/or digging shallow (e.g., 6-inch) trenches in the excavations to direct the water to the sumps. One or more sumps may be required in each excavation (i.e., each waste pit) depending of the amount of open area. Portable pumps will be used to transfer excavation water to the Clearwell for subsequent treatment by the WTS. The excavation water average daily flow rates for each phase of the excavation are presented in the Excavation Plan.

Contact storm water from excavated waste pits awaiting certification as clean will continue to be collected and treated in the WTS. Existing pumps and piping (from the excavation phases) will be used in these areas to transfer water to the Clearwell. The average volumetric flow of this contact storm water is included on the site water balance process flow diagram (PFD) (M-90-10-001) as a separate stream, apart from excavation water.

2.8.4.4 Contact Storm Water from Haul Roads in the Waste Pit Area

Contact storm water from the haul roads in the waste pit area will be directed to excavation areas to be collected and transferred to the Clearwell for subsequent treatment by the WTS. The existing area that will be used as haul roads consists of the road that runs along the southern side of Waste Pit 5 and Waste Pit 6, the branch that runs from that road to the south between Waste Pit 3 and Waste Pit 4 (over the Burn Pit), and a strip that continues toward the south between Waste Pit 3 and Waste Pits 2 and 1. The average flow rate is not expected to be greater than 2,060 gpd.

The haul roads will be isolated from the current noncontact storm water drainage patterns by curbing the road sides, regrading the roads to change the direction of drainage, and running noncontact storm water through designated ditches and under haul roads through culverts. All of these methods will be utilized to keep the noncontact storm water in the waste pit area from contacting the haul road contact storm water. This segregation allows the noncontact storm water to continue to flow to the K-65 Runoff Basin.

2.8.4.5 Contact Storm Water in the Clearwell and Surrounding Areas

Storm water that falls directly into the Clearwell or on areas that are sloped to drain into the Clearwell will be treated by the WTS. The sections of Waste Pits 1 and 3 that currently drain to

the Clearwell will continue to drain in this way until some time during excavation Phases 4 and 9, respectively. The Clearwell will remain in operation until all the waste pits have been cleaned, therefore, storm water that falls in the Clearwell must be treated until the Clearwell is excavated starting during Phase 18. The average storm water rate from the Clearwell and surrounding drainage areas (total surface area of approximately 106,000 ft^2) is approximately 7,220 gpd. When the drainage area in Waste Pit 1 (approximately 45,000 ft^2) is removed, the average storm water flow from the remaining area is approximately 4,180 gpd. When the drainage area in Waste Pit 3 (approximately 32,620 ft^2) is removed, the average storm water flow from the remaining area is approximately 1,940 gpd.

While the Clearwell is being excavated during excavation Phases 18 and 19, the water that falls in the excavation will be pumped to the influent tank in the WTS.

2.8.5 Noncontact Storm Water Inside the Pit Area

There are locations in the pit area where storm water is not contacting raw waste. These locations include the following:

- Storm water from the covered section of Waste Pits 1, 2, and 3
- Storm water from the covered section of Waste Pit 4
- Storm water from other areas bordering the waste pits.

Estimated daily noncontact storm water rates from the waste pit area for each excavation phase are presented in the Excavation Plan and the site water balance PFD (M-90-10-001).

2.8.5.1 Noncontact Storm Water from Waste Pits 1, 2, and 3

Storm water that falls on the portions of Waste Pits 1, 2, and 3 that have not been exposed will continue to drain to the K-65 Runoff Basin (only small sections drain to the Clearwell). This water is referred to as noncontact storm water. This water drains off the western side of Waste Pit 3 to drainage trenches along the western boundary of the waste pit area to the basin. Water from the eastern side of Waste Pit 3 and most of Waste Pits 1 and 2 drains to drainage ditches along the access road that runs along the east side of Waste Pit 2. After Waste Pits 1, 2, and 3 have been certified "clean," the storm water that is collected in the excavations will be directed to Paddys Run or the K-65 Runoff Basin.

2.8.5.2 Noncontact Storm Water from Waste Pit 4

Noncontact storm water from Waste Pit 4 consists of the storm water that runs off the covered pit materials (an approximate area of 1.5 acres or 65,340 ft^2) and is collected in the trench around the pit. The average flow of noncontact storm water from Waste Pit 4 during Phases 1 through 4 is approximately 4,480 gpd. This water currently makes its way to the K-65 Runoff Basin through storm trenches that run along the access roads through the waste pit area. During excavation activities, care will be taken to route these streams across the waste pit area without allowing them to combine with contact storm water from the haul roads. This will be achieved by designating certain drainage trenches and culverts as "clean" and keeping them decoupled from contact storm water streams.

Beginning in Phase 5, a portion of the pit will be excavated. The pit will remain open to some degree through Phase 16. During this period, measures will be taken to separate storm water that lands on the unexcavated portion of the pit from entering the excavation and continuing to drain to the K-65 Runoff Basin.

2.8.5.3 Noncontact Storm Water from Areas Bordering the Waste Pits

There are other areas within the waste pit area which are considered uncontaminated and from which the storm water is allowed to drain to the K-65 Runoff Basin, or to drainage ditches to the north of the waste pit area which drain directly to Paddys Run. These areas include some of the areas between the radiological fences and the boundaries of the waste pits. During excavation activities, all operations in the pits will be performed from the inside of the waste pit area toward the fence limits, thus these streams should not be effected.

2.9 Water Treatment System (PFD M-65-10-001)

Several wastewater streams are expected to meet the WAC established by FDF for discharge to the BSL and will be piped directly to the BSL. Water that does not meet the WAC must be pretreated prior to discharge to the BSL. The WTS is used to provide this pretreatment. The system will be designed for approximately 250 gpm. The WTS is located outside the waste pit area, due north of the BSL. The following sections describe the unit operations to be included in the WTS.

2.9.1 Solids Settling and Equalization

The Clearwell will serve as the initial collection point and "surge tank" for the WTS. Waste-water streams from within the waste pit area and material drainage in the buildings will be

pumped to the Clearwell for solids settling and equalization. Water will be pumped from the Clearwell to the influent tank in the WTS.

Wastewater from the oil/water separator in the thermal dryer system will be pumped to the influent tank, where it will combine with water from the Clearwell. Water will be pumped from the influent tank to the inclined plate clarifier for solids removal.

2.9.2 Initial pH Adjustment

In the event that the pH of the water from the influent tank must be raised to enhance the removal of heavy metals in the clarifier, sodium hydroxide (caustic) will be added to the feed line to the flash mix tank upstream of an in-line static mixer. The feed rate of caustic will be controlled by a pH controller that receives a signal from a pH probe in the flash mix tank. Caustic addition will only be used as necessary. Lime may also be added to the Clearwell to increase pH if deemed necessary.

2.9.3 Clarification

Heavy metals precipitation and solids settling will take place in an inclined plate clarifier (IPC). The clarifier will be equipped with a Flash Mix Tank and a Flocculation Tank. A coagulating agent (e.g., ferric chloride) and a polymer will be added, if necessary, in these tanks to enhance the removal of suspended solids. In the event that heavy metals concentrations in the water exceed the BSL WAC, this system will be operated at the appropriate pH and sufficient coagulant and polymer will be added for the required precipitation. These parameters will be determined by performing bench-scale tests in the field. In the event that heavy metals are not present at levels higher than the BSL WAC, the IPC will be operated to remove as much suspended solids as possible while minimizing chemical usage and sludge generation.

Sludge will be transferred from the bottom of the IPC to the sludge holding tank where it will be held (and decanted if necessary). Sludges will be dewatered and managed consistent with other waste materials.

In the event that the effluent water from the clarifier meets the BSL WAC, the water will be transferred from the clarifier overflow tank to the effluent tank and then to the BSL without further treatment. If the water fails based on suspended solids, heavy metals, or uranium, the water will be pumped through the sand filter(s) for additional solids removal.

2.9.4 Sand Filtration

One or two sand filters will be used for additional solids removal to meet discharge requirements or prepare the water for treatment in the ion exchange unit(s). The number and size of sand filters will be determined based on final mass balance calculations. During sand filter backwash operation, the WTS will be shut down temporarily or only one filter will be operated (if two filters are used). Backwash water will be supplied from the effluent tank to minimize the amount of water discharged from the site. In the event that the effluent from the sand filter meets the BSL WAC (i.e., the uranium concentration is less than 5,000 ppb), the water will bypass the ion exchange unit and be discharged in the effluent tank and then to the BSL. If the uranium concentration in the water is higher than 5,000 ppb, the water will be directed through the ion exchange unit.

2.9.5 Ion Exchange

One or two ion exchange units will be used for removal of dissolved uranium to meet discharge requirements. The number and size of ion exchange units will be determined based on final mass balance calculations. The effluent from the ion exchange unit discharges to the effluent tank. During backwash of an ion exchange unit, the WTS will be shut down temporarily or only one ion exchange unit will be operated (if two units are used). Backwash water will be supplied from the effluent tank to minimize the amount of water discharged from the site. Regeneration of the ion exchange resin is not currently expected to be needed. The ion exchange system may be bypassed if the influent water meets the BSL WAC.

2.9.6 Final pH Adjustment

In the event that the pH of the water must be adjusted above or near 10 to precipitate the heavy metals, a final pH adjustment step is available to lower the pH through the addition of acid. This will only be used as necessary.

2.9.7 Effluent Discharge/Recycle

Water will be discharged from the effluent tank to the BSL. Sampling of the effluent to the BSL and reporting to FDF will be performed to monitor operation of the system and ensure that water discharge to the BSL meets the WAC. At times during which the WTS effluent may not be meeting the BSL WAC, such as startup or during process upset conditions, partially treated water may be recycled back to the WTS influent tank or to the Clearwell. This flow path may be used intermittently to facilitate operation of the WTS.

3.0 PROCESS CONTROL PHILOSOPHY

This section covers the overall control philosophy for the remediation activities. A programmable logic controller (PLC) based system will be utilized to monitor the operations of the thermal dryer and gas cleaning system and to provide certain control functions. The PLC system will be capable of providing the following:

- Collection and display of process parameters (i.e., temperature, pressure, flow rate, etc.).
- Orderly display and information on video monitors. The monitor display program includes graphic features for displaying process parameters.
- Automatic or manual operation of selected control loops through the operator interface station.
- Initiation of an audible and/or visual alarm signal when any input parameter exceeds a preset limit or status.
- Data retention for data management, manipulations, trending, and report generation.
- Automatic printing of alarms on a dedicated printer.

The following general statements apply to all process equipment, but not necessarily heating, ventilation, fire protection, etc.:

- Pumps and other motor driven equipment will generally be started locally, not from the central PLC. The PLC will be able to stop pumps and other equipment, as appropriate, for safety and other interlock functions.
- Local controls will be provided for major processes (i.e., dryer, gas cleaning system, WTS). Monitoring, interlocks, and certain controls will also be provided by the central PLC.
- Alarms will be audibly and visually displayed on local panels as well as on the PLC.

3.1 Waste Removal, Blending, and Preparation

Waste removal, segregation, and handling in the excavations will be manual operations utilizing heavy equipment. No automated controls will be required in the excavations. Operation of the water transfer pumps in the excavations will be manual. The pumps will be started and stopped,

as necessary, by the personnel in the excavation. The pumps will be monitored to ensure that the suction lines remain submerged and the working areas are adequately dewatered. Pumps may be provided with instrumentation to prevent dry-running and overheating.

Waste blending and preparation in the Material Handling Building will consist primarily of manual operations utilizing heavy equipment. Minimal automated controls will be used in the Material Handling Building. This automation will consist of electrical controls on the transfer conveyer from OU1 Contaminated Soil Stockpile to the Material Handling Building.

Sump pumps and the collection tank transfer pump will operate based on the level in the sump or tank. A single float switch with a 60-degree operating angle will be used for on/off operation of the pumps, or separate high- and low-level switches and a pump control relay will be used. The following is a list of sump pumps and transfer pumps associated with waste excavation, blending and preparation that will operate in this fashion:

- Truck wash sump pump
- Truck turnaround area sump pump
- Decon pad sump pump
- Material handling building sump pump
- Material handling building Collection Tank transfer pump.

The truck wash sump pump, the truck turnaround area sump pump, and the decon pad sump pump transfer water to the Clearwell as needed as dictated by the float switches in the sumps. The sump pumps in the material handling building transfer water to the material handling building collection tank. The level switch(es) in the tank dictate when water is transferred from the tank to the Clearwell.

3.2 Dryer Feed System (PFD D-10-10-001)

3.2.1 Operations

As shown on PFD D-10-10-001, the solid feed will be transferred to the mass flow screw feeder (H-1001). This transfer will be by a front end loader. The mass flow screw feeder is variable speed driven for variable flow control. The mass flow screw feeder has an anti-jam program in the PLC that senses a jam condition, causing the affected screw to automatically stop and reverse for one revolution in an attempt to free the jam before returning to forward running condition. If after three attempts within a specified time limit normal operation is not restored, the drive is

shut down and an alarm beacon is lit to indicate operator assistance is necessary to free the jam condition. Level in the mass flow screw feeder hopper is visually monitored.

The screw feeder discharges onto the belt feed conveyor. The conveyor is electrically driven and runs at a constant speed. The belt conveyor is equipped with a single idler weigh belt scale. The weight of the feed material and the speed of the conveyor are measured for calculation of the feed rate by a PLC controller. The feed rate is continuously compared with a set point feed rate and a feed back loop will adjust the screw feed rate until the feed rate matches the set point. If the measured feed rate cannot meet the set point feed rate within a specified time limit, the drive is shut down and an alarm beacon is lit to indicate operator assistance is necessary. It is expected that failure to maintain controlled feed will usually be caused by a plug condition at the screw discharge.

The weigh belt discharges into the dryer feed screw. The feed screw is driven for variable speed control and fixed maximum torque. The feed screw is designed such that it can be retracted for maintenance. Depending on the moisture content, the cohesive and adhesive strength of the material can cause material bridging in the feed screw hopper. Therefore, the screw speed will be manually adjusted to maintain a feed rate that will meet or exceed the feed rate of the material being delivered to it so as to prevent an accumulation of material in the feed screw hopper. A high level sensor is located in the feed screw hopper that will light an alarm beacon to notify the operator that either material plugging is occurring in the feed screw or the screw feeder is delivering material to the dryer at a rate that is slower than the rate delivered to it by the feed belt conveyor.

The dryer feed screw has an anti-jam program in the PLC that will sense a jam condition. The screw will automatically stop and reverse for one revolution in an attempt to free the jam before returning to forward running condition. If after three attempts within a specified time limit normal operation is not restored, the drive is shut down and an alarm beacon is lit to indicate operator assistance is necessary to free the jam condition. All upstream equipment is shut down on the sensing of a jam condition.

3.2.2 Instrumentation and Controls

To support and control the operation depicted on PFD D-10-10-001, the following major controls and instrumentation are implemented:

1) The belt speed and material weight on the feed conveyor belt are automatically measured and converted to mass feed rate by the belt scale.

2) Level instrumentation on the dryer feed screw hopper.

3.3 Thermal Dryer Operation (PFD D-20-10-001)

3.3.1 Operations

As shown on PFD D-20-10-001, the indirectly-fired rotary dryer receives waste materials with various moisture contents depending on the type of waste. Waste materials are fed into the dryer from the storage pile. Waste materials are metered into the dryer and dried to a design basis product with 10 percent moisture content (wet weight basis).

The rotary dryer system consists of a cylindrical shell rotated with a variable speed drive. The rotating cylinder is heated externally by a furnace with adequate length to satisfy heat transfer requirements. Using natural gas and/or #2 fuel oil as fuel for combustion, heat energy for the indirect drying is produced in multiple furnace zones by a set of burners located in each zone. Burners are operated with adjustable primary air/fuel ratio, and secondary air addition to control the flame temperature so the rotating cylinder does not exceed its design temperature. Air to the burners is supplied by the combustion air fan.

The drying operation is controlled by adjusting the temperature conditions in each zone of the dryer, the feed rate into the dryer, and the retention time in the dryer. The retention time is controlled by varying the speed of rotation of the dryer shell. The feed rate is controlled by a variable rate feeder, and the temperature conditions are manually set on the temperature controllers for each zone of the multiple-zone furnace. Product moisture content and temperature are monitored and will be used to control drying operation.

The product moisture content is targeted at 10 percent so that the optimum moisture content of the waste can be achieved in the railcar by mixing the dryer product with wet (not dried) material from the storage pile. Knowing the moisture content and flow rate of the dried product, and the moisture content of the wet material, the flow of the wet material is controlled to achieve the desired moisture content.

The recuperative heater utilizes the heat available in the combustion gases exiting the dryer to preheat the sweep air and combustion air. Measurement of the heated air temperature and

control of the combustion gas flow through the recuperative heater are used to control the sweep air and combustion air temperatures.

A more complete explanation of the operation is available in the Process Description (Section 2.5).

3.3.2 Instrumentation and Controls

To support and control the operation depicted in PFD D-20-10-001, the following major controls and instrumentation are implemented:

1. A burner management system ensures safe operation of the dryer. The safety-interlock logic ensures that the required limits and conditions (as specified by the vendor and standard burner management/safeguard practice) are satisfied prior to permitting start-up, continued operation, or shutdown of the dryer. If the limits and conditions of the logic are not met, the management system does not allow start-up of the burners, or shuts them down if in operation.

2. The burners in each zone are automatically controlled to maintain the selected shell temperatures. The shell temperatures are selected manually by the operator. Vendors recommended shell temperatures will not be exceeded.

3. The fuel/air ratio of each burner is controlled by a pressure-balanced regulator or a fully-metered electronic control integrated with a programmable microprocessor as determined by the vendor.

4. The fuel (natural gas or No. 2 fuel oil) utilized is manually selectable by the operator. When in natural gas firing mode, the burner management system will utilize No. 2 fuel oil as auxiliary fuel to supplement available natural gas.

5. The temperature of the sweep air and combustion air is controlled by varying the quantity of the combustion gases passing through the recuperative heater. The unused portion will bypass the recuperative heater.

6. The heated air flow rate (sweep air and combustion air) is controlled by maintaining the pressure of heated air exiting the recuperative heater. Control is accomplished using a damper on the air supply fan inlet. The set point for this pressure is established based on the sweep air flow rate, as measured in the sweep air duct leading to the dryer.

7. The pressure in the dryer furnace (combustion chamber) is maintained by adjusting the variable speed drive on the furnace induced draft fan.

8. The furnace stack gas temperature is controlled to below 600°F by adjusting the flow rate of cooling water to the spray quench.

9. The pressure inside the dryer shell is maintained at a negative pressure by adjusting the speed of the induced draft fan (B-5001).

10. Temperature instrumentation is provided in the following locations: primary and secondary combustion air to burners, dryer shell temperature in each zone, combustion gases in each furnace zone in various locations in the annular space between the furnace wall and the dryer shell, combustion gases exiting each furnace zone, air to and from the recuperative heater, combustion gases to and from the recuperative heater, sweep air to the dryer, process off-gas from the dryer, dryer product temperature just before leaving the last dryer zone, and furnace stack gas.

11. Flow instrumentation is provided on the following: natural gas to the burners, fuel oil to the burners, primary and secondary combustion air to the burners, atomizing air to the burners, total combustion gas to the stack, and sweep air to the dryer.

12. Pressure instrumentation is provided on the following: natural gas to burners, fuel oil to the burners, primary and secondary combustion air to burners, atomizing air to the burners, process off-gas from dryer, furnace gas exit, and heated air (sweep air and combustion air).

3.4 Gas Cleaning System (PFD D-50-10-001)

3.4.1 Operations

As shown on PFD D-50-10-001, the off-gas from the dryer initially passes through the high efficiency cyclone separator to remove large, entrained particulate. The solids removed from the off-gas are transferred from the cyclones via the cyclone solids transfer screw to the drier feed system and mixed with the wet material and fed to the dryer. The transfer screw runs continuously.

The off-gas from the cyclone is cooled in the spray quench tower. The cooling spray water is recirculated at a relatively constant rate. The water and condensate pass from the quench tower into a settling tank, from which the quench recycle water is pumped to the sprays in the quench tower. Some of the condensate, including any organic condensate, is purged from the system by an overflow in the settling tank. Caustic (NaOH) is added to the settling tank to control the pH of the recycle water as determined by pH measurement.

The hydroclone recirculating pump pumps a constant rate sidestream of the recycle water from the settling tank through the hydroclones and back into the settling tank. The hydroclones remove most of the suspended solids from the recycle water, with the solids being purged with part of the condensate. The purges from the hydroclones and the settling tank flow to the oil/water separator system.

The off-gas from the quench flows to the contact scrubber. Scrubber water is recirculated at a steady rate through the contact scrubber via the scrubber recirculating pump. This recycle water is cooled in the noncontact scrubber heat exchanger to further cool the off-gas. Cooling the off-gas to approximately 100EF reduces the moisture and residual organic contents in the off-gas, which improves the performance of the downstream HEPA filter and carbon adsorption units. A secondary heat exchanger is used in warmer weather. The chiller and chiller recycle pump are used to provide the cooling media for the secondary heat exchanger. Caustic is added automatically to the scrubber recycle stream as determined by pH measurement. Scrubbing water and condensate drain to the settling tank.

The primary heat exchanger used to remove the heat from the scrubber recycle water is a noncontact heat exchanger. A cooling tower and second recirculating cooling water loop is used as the cooling medium for the heat exchanger. Cooling water is recycled at a steady rate by the cooling water recirculating pump from the cooling tower through the heat exchanger back to the tower. A small purge stream is discharged from the cooling tower to minimize the buildup of suspended and dissolved solids in the cooling tower recycle stream.

The off-gas from the scrubber flows through the low-pressure differential venturi scrubber and the mist eliminator. The venturi pressure differential can be adjusted with a manual control element. The rate of scrubbing water recirculated through the venturi can be manually adjusted. Entrained water from the venturi is removed from the off-gas in the mist eliminator, and drains to the venturi sump. Excess condensate overflows from the venturi sump and is directed to the oil/water separator.

Off-gas from the mist eliminator flows into the wet electrostatic precipitator (WESP) for the removal of residual particulate. A constant rate of water is continuously sprayed into the off-gas as it enters the WESP. Water and particulate collected in the WESP are drained to the tray tower sump.

The off-gas from the venturi is slightly reheated in the electrically heated off-gas reheater in order to prevent any condensation in the HEPA filters or carbon adsorber. The induced-draft (ID) fan is used to pull the off-gases through the system from the dryer through the WESP, keeping the entire system under negative pressure so that any leakage is into the system. Pressure measurement off the dryer is used to control the vacuum (pressure differential) being induced by the ID fan.

The HEPA filters are mounted in parallel with only one being used at a time, with the other on standby or being replaced as necessary. The pressure differentials across the HEPA filter and the carbon adsorber are continuously monitored. The switch from one filter to the other is done manually. The clean off-gas from the system is released to the atmosphere through the vent stack.

3.4.2 Instrumentation and Controls

To support and control the operation depicted in PFD D-50-10-001, the following major controls and instrumentation are implemented:

1) The off-gas pressure differential across the cyclone is continuously monitored.

2) Caustic addition to the settling tank is automatically adjusted by pH measurement on the quench recycle stream.

3) Purge from the cooling tower is manually adjusted, and is based on periodic manual sampling and analysis of the cooling tower water.

4) Pressure differential across the venturi scrubber is manually controlled by adjustment of the venturi variable throat.

5) Caustic addition rate to the contact scrubber recycle flow is automatically adjusted based on pH measurement of the recycle stream.

6) The rate of water sprayed into the WESP is manually adjusted.

7) The output voltage on the WESP is continuously monitored.

8) Electrical power to the off-gas reheater is automatically controlled based on the off-gas exit temperature.

9) The speed of the ID fan is automatically controlled based on the pressure (vacuum) in the dryer.

10) The off-gas in the stack is continuously monitored for radionuclides.

11) Temperature instrumentation is provided on the following: contact scrubber off-gas, scrubber recycle water into and out of the scrubber heat exchanger, scrubber recycle water out of the scrubber secondary heat exchanger, and off-gas reheater inlet and outlet.

12) Flow instrumentation is provided on the following: recycle flow to the quench, recycle flow to the venturi, recycle flow to the contact scrubber, and water flow to the WESP spray.

13) Pressure differential instrumentation is provided across the following: cyclone, venturi scrubber, contact scrubber, ID fan, HEPA filter, and carbon adsorber.

14) Level instrumentation is provided on the following: settling tank, and venturi sump.

15) Makeup water addition to the cooling tower is automatically controlled based on level measurement in the cooling tower sump.

3.5 Railcar Loadout and Lidding Operations (PFD D-35-10-001)

Railcar decon and loadout activities in the Railcar Loadout Building will consist primarily of manual operations. Minimal automated controls will be used in the Railcar Loadout Building. This automation will consist of electrical controls on the lid hoist and instrumentation associated with the railcar scale.

The collection sump in the Railcar Loadout Building will operate based on level in the sump. A single float switch will be used for on/off operation of the pump, or separate high- and low-level switches and a pump control relay will be used.

3.6 Water Treatment System

The WTS operates semiautomatically. Automated controls will be provided by conventional relay logic in a control panel located at the WTS. Plant operators initiate operation of the system by placing the hand switches for the electrical equipment in the AUTO position and starting the Clearwell transfer pump.

The following is a summary of how each piece of electrical equipment is controlled:

- The caustic feed pump operates based on a pH probe signal when the pump is operated. The pH probe will be located in the flash mix tank. This pump will only be used if pH control is required.

- The flash and flocculation mixers are started and stopped by placing the associated handswitch in the ON or OFF position. No interlocks govern operation of these mixers.

- The polymer and flocculent tank mixers are started and stopped by placing the associated handswitch in the ON or OFF position. No interlocks govern operation of these mixers.

- The polymer and flocculent feed pumps are controlled based on an influent flow rate signal. Calibration of the control loops will be based on influent water quality.

- The clarifier sludge transfer pump and the sludge holding tank transfer pump are started and stopped by placing the associated handswitch in the ON or OFF position. No interlocks govern operation of these pumps.

- The filter feed pump will operate based on level switches in the clarifier overflow tank. A high-level will start the pump and a low-level will stop the pump. The pump can transfer water to the sand filter or to the effluent tank depending on the need for filtration. The operator will manually adjust the necessary valves to direct the flow.

- The effluent pump will operate based on level switches in the effluent tank. A high-level will start the pump and a low-level will stop the pump. The operator will manually adjust the necessary valves to direct the flow.

In the event that the water level in the clarifier overflow tank reaches a high-high level (i.e., if the filter feed pump fails, etc.), flow to the clarifier must be stopped. Because it would be cumbersome to interlock control of the existing Clearwell transfer pumps to level switches in the clarifier overflow tank, an actuated valve in the influent line may be used to stop flow to the WTS. The existing discharge line from the Clearwell transfer pumps will be protected by including a pressure switch that will cause the transfer pump to shut down once the actuated valve closes at the WTS.

Alarm horns and flashing lights will be used to alert WTS operators of conditions requiring immediate attention when a process upset condition arises.

4.0 SAMPLING AND ANALYSIS

Sampling and analysis will be performed on a regular basis in support of operations. Samples taken will include solids from the waste pits, contaminated water derived from the various processes, and filters from the laboratory ventilation system. The preliminary sampling frequency and analysis for various sampling locations are presented in Table 4-1. Detailed sampling and analytical procedures will be presented in the Sampling and Analysis Plan. A brief overview of the sampling and analytical program is presented below.

4.1 Sampling

Sampling will be conducted in accordance with federal, state, and local regulations to produce valid, accurate, and defensible data. Field sampling teams will be equipped with portable organic vapor analyzers (HNu-sensors, PID detectors), or other similar devices to detect organic vapors that may be present in the sampling area. Refrigerated ice packs or ice placed into portable coolers will be used for collection of samples that require temperature control. A chain-of-custody protocol, with tamper-safe seals of all sample containers, will be established for all field-generated samples. Chain-of-custody forms will, at a minimum, include the following:

- Chain-of-custody number
- Sample number
- Sample location
- Date and time the sample was taken
- Name of the person that collected the sample
- Analyses planned for the samples
- Relinquished/received by
- Any pertinent comments.

Field personnel will also maintain a field notebook in which their daily activities will be recorded. The notebook, along with the chain-of-custody, will contain sufficient information to allow reconstruction of the sample collection and handling procedures at a later time.

FDF WPRAP Radiological Control will do radiological sampling/surveys as determined by FDF WPRAP Radiological Control in accordance with FDF radiological control procedures. New methods for real-time radiological monitoring will continue to be sought.

4.2 Analyses

IT will use an on-site laboratory facility to perform all the of required analysis for the BSL WAC and the CDF WAC. In addition, the on-site laboratory facility will provide the process operational data necessary to insure compliance with the CDF WAC.

The on-site laboratory facility will be operated in compliance with QA practices documented in the Sampling and Analytical Plan and according to the requirements of Sections 9 and 12, and Appendices E and G of the FEMP Sitewide CERCLA Quality Assurance Project Plan (SCQ). The on-site laboratory will maintain certification with the state of Ohio, the state of Utah, or other states, as required, and will use analytical methods for waste characterization which satisfy the general requirements of the CDF and AWWT.

A description of the major types of analyses is presented below.

Solids. To generate data for process operations, samples will be taken from the following locations:

- Pit face
- The waste processing building receiving bins
- The blending area after emerging from the dryer.

The pit face samples will be analyzed for radionuclides, moisture, and specific gravity to confirm that the material handling approach is appropriate for the material. Samples of the pit face will typically be taken more frequently at the beginning of the excavation of a particular pit. As the excavation proceeds, if the excavated material appears to have consistent physical and radiological characteristics, the sampling and analytical requirements for the pit face will be reduced.

As an ongoing check of the physical and radiological characteristics of the excavated materials, random samples will be taken from the transfer trucks. The samples from the transfer trucks will be analyzed for radionuclides, moisture, and specific gravity.

Grab samples for chemical and radiochemical analysis will be taken as the material is added to the railcar storage bins. These grab samples will be composited to generate a representative bin sample and will be analyzed for the waste acceptance criteria. These samples will be used to document compliance with the CDF WAC.

The analysis of samples for the determination of RCRA characteristic hazardousness will occur only on the material staged in the railcar storage bins prior to railcar loadout. All other sampling and analysis for WAC compliance and chemical analysis prior to placement in the railcar storage

bin will involve sampling and analysis for determination of WAC compliance characteristics other than RCRA.

Water Sampling. Water will be sampled from the following streams:

- Grey water collection tank
- Laboratory wastewater
- Clearwell
- Noncontact storm water discharge to Paddys Run from the SWM Pond
- Water treatment system effluent to BSL.

Noncontact Storm Water Discharge to Paddys Run. Noncontact storm water will be routed to Paddys Run from the SWM Pond. This water will be sampled and analyzed, as needed, to demonstrate compliance with the FEMP SWPPP and NPDES permit.

Oil/Water Separator Discharge. Process wastewater from the thermal drying operation (process water) will be routed to the WTS. Sampling and analysis of the stream will be covered by the WTS effluent sampling.

Water Treatment System Effluent. WTS effluent will be sampled using an automatic composite sampling device. Composite samples will be analyzed for BSL WAC. This will allow the continuous treatment of wastewater through the WTS to the BSL.

Clearwell. The Clearwell will be used as an influent holding pond for the WTS. All water discharge from the Clearwell will be treated through the WTS prior to discharge of the BSL.

Air Emissions. Point sources will be tested by an independent performance testing firm to verify that BAT removal efficiency requirements are being met.

A performance test will be conducted on the emissions from the two dryer stacks. The performance test will include the following test procedures on the dryer off-gas stack:

- Method 5 (M-5) sampling train for the parameters listed in Table 4-2
- Modified Method 5 (MM-5) sampling train for the parameters listed in Table 4-3
- VOST for the parameters listed in Table 4-4
- Method 8 sampling train for sulfuric acid
- Method 15 semicontinuous GC for carbon disulfide
- Method 114 for radionuclides and radon

- Operation of the CEMs listed in Table 4-5.

The following tests will be conducted on the emissions from the furnace stack:

- An M-5 sampling train for particulate.
- CEMs for NO_x and CO_2.

The alpha CAM and isokinetic continuous stack monitoring for radionuclides will be verified during the performance test using Method 114. O_2 and CO_2 emission rates will be determined for both stacks by analysis.

Laboratory Facility. The on-site laboratory facility will consist of facilities designed with floor space adequate to minimize the potential of sample cross-contamination. The on-site laboratory will operate under existing or, if necessary, revised DOE and/or NRC licenses and/or permits. The on-site laboratory will be equipped and staffed to provide full-scope chemical and radiochemical analysis.

The on-site laboratory facility QAP will be carried out through the use of detailed Quality Implementing Procedures. These will specify requirements for tracking laboratory performance and personnel training and will enforce compliance through a Corrective Action Response program. The QAP Quality Implementing Procedures will be consistent with the requirements of Sections 9 and 12, and Appendices E and G of the FEMP Sitewide CERCLA Quality Assurance Project Plan (SCQ). Regularly scheduled internal surveillance and audits will assure the quality of the on-site laboratory facility operation.

5.0 UTILITY REQUIREMENTS

The utilities required to support the Fernald WPRAP site remediation are listed below:

- Electricity
- Natural gas
- Fuel oil
- Caustic
- Compressed air (plant and instrument)
- Water (potable and process)
- Cooling water
- Fire water
- Sewage.

IT will tie-in to the existing FDF utility storage, supply, and/or collection systems listed below:

- Electricity
- Natural gas
- Water (potable and process)
- Firewater.
- Sanitary sewer.

IT will provide the necessary equipment for the storage, delivery, and/or transfer of the utilities listed below:

- Fuel oil
- Caustic
- Compressed air (plant and instrument)
- Cooling water.

A description of each utility system is provided in the following subsections.

5.1 Electricity

Electricity will be tied-in to the existing power lines. New power lines will be run aboveground from the existing FDF power lines to the IT transformer(s). Most electrical equipment will be 480 volts. The power distribution system that includes the switchgear for distributing power to the electrical equipment will be located near the transformer(s). Power factor compensating capacitors will be installed in the power distribution system to maintain the power factor above 90 percent. An electric power meter will be installed that will provide indication and recording of the power consumption, demand and power factor.

Incoming line voltage to the transformer will be 13.2 kV at 1500/1200 kva. The average electricity usage is estimated to be approximately 1.0 MW (5018 MW-hr/yr). The peak usage is estimated to be approximately 1.3 MW.

5.2 Caustic

Caustic (sodium hydroxide) may be required in the dryer off-gas cleaning system for neutralization of any acids that may be present in the condensed water. The caustic would be received by tank truck as either a 20 percent or a 50 percent solution depending on actual usage rates. If a 50 percent solution is delivered to the site, then the 50 percent caustic will be diluted to approximately 20 percent and then stored in the caustic storage tank.

The caustic storage tank will be located outside the contamination zone. The tank will have secondary containment.

The flow rate of 20 percent caustic to the gas cleaning system is estimated to be approximately 474 lb/hr with a peak usage rate of approximately 2,200 lb/hr. Metering pumps are used to control the feed rate of caustic to the various users in the gas cleaning system.

5.3 Natural Gas

A new underground natural gas line will be installed from the existing FDF natural gas main line. The tie-in line for natural gas will have isolation valves and meters to indicate, record and totalize the natural gas flow to IT. The natural gas service will be interruptible and therefore a secondary source of fuel (fuel oil) is provided. The primary use of the natural gas is as a fuel for the dryer burners.

The peak natural gas flow rate is estimated to be approximately 850 scfm. The annual average natural gas flow rate is estimated to be approximately 833 scfm. The pressure of the natural gas at the tie-in point will be in the range of 40 to 55 psig. The annual natural gas consumption is estimated to be approximately 242 million standard cubic feet.

5.4 Fuel Oil

Fuel oil will be used as supplemental fuel to the natural gas for the dryer burners. The fuel oil will be received by truck and loaded into a 20,000-gallon, aboveground, storage tank. This tank will be located in a bermed area outside of the contamination zone. A fuel pump skid will be located near the fuel oil storage tank. The skid will contain the pump and valving for transfer of the fuel oil to the burner control piping. All fuel oil piping will be installed above ground.

The average fuel oil usage is estimated to be approximately 1 gpm or 451,000 gallons per year. The instantaneous maximum fuel oil usage is estimated to be approximately 6.6 gpm.

5.5 Compressed Air (Plant and Instrument)

Compressed air will be used by the dryer system. The users include both process equipment and instruments. The air used by the instruments (instrument air) will be dehumidified (dried) to a relatively low dew point. A desiccant dryer system will be used to dehumidify the instrument air. The air compressor will be electrically powered. The air compressor, dehumidifier, and surge tank will all be located outside the contamination zone. All compressed air piping will be

installed above ground. The pressure of the compressed air will be approximately 100 psig. The average compressed air usage is estimated to be approximately 150 scfm with a peak usage rate of approximately 200 scfm.

5.6 Water (Potable and Process)

The water used by IT to support the Fernald WPRAP site remediation will be provided from the FDF. A new underground water line will be installed by IT that will tie-in to the FDF existing water line. Appropriate isolation valves as well as a back-flow preventer will be installed at the tie-in. A flow meter will be installed in the water line, just after the back-flow preventer, that will measure, indicate, record and totalize the water flow to the IT plant.

Once within the IT plant battery limits, the water line will be split to provide both potable and process water. The branch to the process water users will include isolation valves and a back-flow preventer. The branch to the potable water users will contain isolation valves.

The pressure of the water at the tie-in location is approximately 45 psig. The average water usage rate is estimated to be approximately 65 gpm with a peak usage rate of 90 gpm.

5.7 Fire Water

A below ground firewater branch line will be installed to the IT plant from the existing FDF fire water system. The line will be sized to provide the water flow rate to a hydrant in accordance with the appropriate NFPA codes and standards.

5.8 Cooling Water

Cooling water is used in the dryer off-gas system to remove heat from the off-gas and in the process, condense the water vapor. The cooling water will be recirculated through indirect heat exchangers (plate and frame or shell and tube type) so that the cooling water does not come into contact with the process streams (gas or water).

A more complete description of the dryer off-gas system and the cooling water system is provided in Section 2.6.

TABLES

Table 4-1

Preliminary
Sampling and Analytical Program

Matrix	Location	Analysis	Frequency	Type
Solids	Newly exposed pit excavation face	Radionuclides, moisture, specific gravity	1/day/pit [a]	grab/ composite [b]
	Transfer truck loading or receiving bay in waste processing building area along side pit	Radionuclides, moisture, specific gravity	1/day	composite
	Blending Area	Radionuclides, moisture, specific gravity, Proctor density	1/day	composite
	Composited sample from loader bucket used to transfer/load material into bin	PCDF WAC	8/bin	composite
	Non pit waste solids (e.g. ion exchage resin)	PCDF WAC[f]	1/batch[f]	grab[f]
Water	Clearwell	BSL WAC [d]	1/week [c]	grab
	Laboratory Wastewater	BSL WAC	monitor [e]	grab
	Grey Water Collection Tank effluent	BSL WAC	monitor [e]	grab
	Noncontact storm water discharge from SWM Pond to Paddys Run	FEMP SPPP, Section 6.3	monitor [e]	grab
	Water treatment plant effluent	BSL WAC	monitor [e]	composite
Air	Lab ventilation system	gross Alpha	monitor [e]	filter

[a] This is a preliminary estimated average number of samples. A newly encountered pit may be sampled more frequently during the initial excavation stage. Sampling may diminish as the pit material exhibits consistent characteristics.
[b] Grab and/or composites from grabs will be analyzed.
[c] Clearwell water sampling frequency will vary based on changes in waste pit excavation activities.
[d] Wastewater may be sampled and analyzed for various compounds which are part of the BSL influent criteria. Analysis may not be for all BSL influent WAC constituents.
[e] Sampling frequency will be defined in the Sampling and Analysis Plan.
[f] Non pit waste solids will be sampled and analyzed for disposal consistent with the requirements for pit waste materials.

Table 4-2
Parameters for Analysis for Samples from the M-5 Sampling Train

Particulate	
Hydrogen Fluoride	Ammonia
Hydrogen Chloride	Nitric Acid

Table 4-3
Parameters for Analysis for Samples from the MM-5 Sampling Train

2,4-Dinitrotoluene	Isophorone
2,6-Dinitrotoluene	Naphthalene
2-Methylnaphthalene	Pentachlorophenol
4,4-Dinitrodiphenyltrichloroethane	Phenol
Diethyl Phthalate	Tributyl Phosphate
Hexachloroethane	

Table 4-4
Parameters for Analysis for Samples from the VOST

1,1,1-Trichloroethane	Dichlorodifluoromethane
1,1,2,2-Tetrachloroethane	Dichloromethane
1,1-Dichloroethane	Ethyl Benzene
1,1-Dichloroethene	Isobutyl Alcohol
1,2-Dichloroethane	Methylene Chloride
1,2-Dichloroethylene	Styrene
1,4-Dioxane	Tetrachloroethene
2-Butanone	Toluene
2-Hexanone	Total Xylene
Acetone	trans-1,2-Dichloroethene
Benzene	Trichloroethene
Carbon Tetrachloride	Trichlorofulormethane
Chlorobenzene	Vinyl Chloride
Chloroform	

Table 4-5
Continuous Emissions Monitors

NO_x	SO_2

DRAFT

Waste Pits Remedial Action Project (WPRAP) Design Criteria and Assumptions

***

PREPARED
for
Fluor Daniel Fernald, Inc.
Fernald, Ohio

FDF Subcontract No. 98SC000001

***

PREPARED
by
IT Corporation
2790 Mosside Boulevard
Monroeville, PA 15146-2790

IT Project No. 773481

***

Revision B
Issue Date: February 13, 1998

Record of Issue/Revisions

Date	Rev. No.	Description of Issue/Revision
1-9-98	A	Original Issue of Draft
2-13-98	B	Draft Issued for EPA Review

Table of Contents

1.0 INTRODUCTION 1

2.0 SYSTEM PERFORMANCE, DESIGN BASIS, AND ASSUMPTIONS 1
- 2.1 Waste Excavation 3
  - 2.1.1 Functional Requirements 3
  - 2.1.2 Design Criteria 6
- 2.2 Waste Blending 7
  - 2.2.1 Functional Requirements 7
- 2.3 Waste Preparation 7
  - 2.3.1 Functional Requirements 7
  - 2.3.2 Design Criteria 8
- 2.4 Dryer Feed System 9
  - 2.4.1 Functional Requirements 9
  - 2.4.2 Design Criteria 9
- 2.5 Thermal Dryer 9
  - 2.5.1 Functional Requirements 9
  - 2.5.2 Design Criteria 10
- 2.6 Gas Cleaning System 10
  - 2.6.1 Functional Requirements 10
- 2.7 Railcar Loadout 11
  - 2.7.1 Functional Requirements 11
  - 2.7.2 Design Criteria 12
- 2.8 Site Water Management 14
  - 2.8.1 Functional Requirements 14
  - 2.8.2 Design Criteria 16

3.0 APPLICABLE REGULATORY REQUIREMENTS AND COMPLIANCE DEMONSTRATIONS 17
- 3.1 Substantive Permitting Requirements for Air Contaminant Sources 18
- 3.2 Substantive Permitting Requirements for Wastewater and Storm Water Streams 19
- 3.3 Substantive RCRA Permitting Requirements 21
- 3.4 Substantive Permitting Requirements for Wetlands and Waters of the U.S. 21

4.0 WASTE ACCEPTANCE CRITERIA 23
- 4.1 On-Site Disposal Facility 23
- 4.2 Commercial Disposal Facility 26
  - 4.2.1 Physical Requirements 27
  - 4.2.2 Radiological Requirements 27
  - 4.2.3 Chemical Requirements 28

5.0 APPLICABLE DOE ORDERS 29

Table of Contents *(Continued)*

6.0 PRE-OPERATIONAL D&D MEASURES 30

7.0 DESIGN CRITERIA 32
- 7.1 Process 32
  - 7.1.1 Codes, Standards, and Regulations 32
  - 7.1.2 Design Criteria 32
- 7.2 Mechanical 33
  - 7.2.3 Piping 36
  - 7.2.4 Materials Handling 37
- 7.3 Civil Design Basis 38
  - 7.3.1 Geotechnical 38
  - 7.3.2 Access Roads and Fencing 39
  - 7.3.3 Laying Out of Work 40
  - 7.3.4 Identification and Relocation of Utilities 41
  - 7.3.5 Site Clearing 41
  - 7.3.6 Earthwork (Except Pit Excavation) 41
  - 7.3.7 Dust Suppression 42
- 7.4 Structural Design Basis 42
  - 7.4.1 Codes, Standards, and Regulations 42
  - 7.4.2 Design Load 43
  - 7.4.3 Structural Materials 44
- 7.5 Architectural Design Basis 45
  - 7.5.1 Codes, Standards, and Regulations 45
  - 7.5.2 Pre-Engineered Buildings 46
    - 7.5.2.1 Material Handling Building 46
    - 7.5.2.2 Railcar Loadout Building 47
    - 7.5.2.3 Railcar Preparation and Liner Storage Building 48
    - 7.5.2.4 Railcar Survey Area 48
    - 7.5.2.5 Dryer Enclosure 48
    - 7.5.2.6 Maintenance Building 49
    - 7.5.2.7 Warehouse 49
    - 7.5.2.8 Laboratory 49
    - 7.5.2.9 Water Treatment System 49
  - 7.5.3 Portable Structures 49
- 7.6 Electrical 51
  - 7.6.1 Power 51
  - 7.6.2 Instrumentation and Controls 52

List of Tables

3-1	ARARs (Applicable Requirements; Relevant and Appropriate Requirements)
3-2	Substantive Permitting Requirements
4-1	On-Site Disposal Facility Waste Acceptance Criteria
4-2	CDF Radiological Acceptance Criteria
5-1	DOE Orders
5-2	Engineering Standards

List of Figures

2-1 Waste Pits Excavation Limit
2-2 Waste Pits Cross Sections
2-3 Schematic of Representative Waste Pit Excavation Phases

List of Appendices

Appendix A Waste Characterization Summary

List of Acronyms/Abbreviations

AASHTO	American Association of State Highway Transportation Officials
ABMA	American Bearing Manufacturers Association
ACGIH	American Conference of Government Industrial Hygienists
ACI	American Concrete Institute
ACM	Asbestos Containing Material
ACOE	United States Army Corps of Engineers
AFBMA	Anti-Friction Bearing Manufacturers Association
AGMA	American Gear Manufacturers Association
AISC	American Institute of Steel Construction
ALARA	As Low As Reasonably Achievable
ALTER	Accelerated Life Testing and Environmental Research Facility
AMCA	Air Movement and Control Association
ANS	American Nuclear Society
ANSI	American National Standards Institute
APC	Air Pollution Control
API	American Petroleum Institute
ARAR	Applicable or Relevant and Appropriate Requirement.
ARI	American Refrigeration Institute
ASCE	American Society of Civil Engineers
ASHRAE	American Society of Heating, Refrigeration and Air Conditioning Engineers
ASME	American Society of Mechanical Engineers
ASNT	American Society of Nondestructive Testing
ASTM	American Society for Testing and Materials
AWS	American Welding Society
AWWA	American Water Works Association
AWWT	Advanced Wastewater Treatment
BAT	Best Available Technology
BSL	Biodenitrification Surge Lagoon
CAM	Continuous Air Monitor
CBR	California Bearing Ratio
CDF	Commercial Disposal Facility
CEM	Continuous Emissions Monitor

List of Acronyms and Abbreviations *(Continued)*

CEMA	Conveyor Equipment Manufacturers Association
CERCLA	Comprehensive, Environmental Response, Compensation, and Liability Act
CFR	Code of Federal Regulations
COC	Constituent of Concern
CPT	Cone Penetrometer Test
CRSI	Concrete Reinforcing Steel Institute
CRU	CERCLA/RCRA Unit
CWA	Clean Water Act of 1977, as amended
D&D	Decontamination and Dismantlement
DAC	Derived Air Concentration
DCD	Design Criteria Document
DEEP	Dewatering Excavation Evaluation Program
DOE	United States Department of Energy
DOE-NV	United States Department of Energy - Nevada Office of Operations
DOT	United States Department of Transportation
EJMA	Expansion Joint Manufacturers Association
ERDA	Energy Research and Development Administration
F	Fahrenheit
FDF	Fluor Daniel Fernald, Inc.
FEMP	Fernald Environmental Management Project
FERMCO	Fernald Environmental Restoration Management Corporation
FFCA	Federal Facilities Compliance Agreement
fpm	feet per minute
FS	Feasibility Study
FSAR	Final Safety Analysis Report
ft^2	square foot (feet)
GCS	Gas Cleaning System
GFCI	Ground Fault Circuit Interrupter
GLC	Ground Level Concentration
gpm	gallons per minute
HEPA	High Efficiency Particulate Air (filter)
hr	hour
HVAC	Heating, Ventilation, and Air Conditioning

List of Acronyms and Abbreviations *(Continued)*

IEEE	Institute of Electrical and Electronics Engineers
IES	Illuminating Engineers Society
ID	Induced Draft
IPC	Inclined Plate Clarifier
ISA	International Society for Measurement and Control
IT	IT Corporation
kg	kilogram
kV	kilovolt
kVA	kilovolt-ampere
kW	kilowatt
lb	pound
LLRW	Low Level Radioactive Wastes
m^2	square meter
MAGLC	Maximum Allowable Ground Level Concentration
MAWC	Maximum Average Waste Concentration
MBMA	Metal Building Manufacturers Association
MCC	Motor Control Center
MEI	Maximally Exposed Individual
MHB	Material Handling Building
µCi/cc	microcurie per cubic centimeter
mrem	millirem
MSS	Manufacturers Standardization Society
NAD	North American Datum
NEC	National Electric Code
NEMA	National Electrical Manufacturers Association
NESHAP	National Emission Standards for Hazardous Air Pollutants
NETA	National Electrical Testing Association
NFC	National Fuel Code
NFPA	National Fire Protection Association
NP	Nonplastic
NPDES	National Pollutant Discharge Elimination System
NPH	Natural Phenomenal Hazard
NTS	Nevada Test Site

List of Acronyms and Abbreviations *(Continued)*

OAC	Ohio Administrative Code
OBBC	Ohio Basic Building Code
ODOT	Ohio Department of Transportation
OEPA	EPA Ohio Environmental Protection Agency
OSDF	On Site Disposal Facility
OSHA	Occupational Safety and Health Administration
OU	Operable Unit
PC	Performance Category
PCB	Polychlorinated Biphenyl
pcf	pounds per cubic foot
pCi/1	picoCuries per liter
PFD	Process Flow Diagram
PID	Photoionizing Detector
PPE	Personal Protective Equipment
psf	pounds per square foot
psi	pounds per square inch
PTI	Permit to Install
PTO	Permit to Operate
PVC	Polyvinyl Chloride
QAP	Quality Assurance Plan
RCRA	Resource Conservation and Recovery Act
RD	Remedial Design
RI	Remedial Investigation
RLB	Railcar Loadout Building
ROD	Record of Decision
SAE	Society of Automotive Engineers
SCS	Soil Conservation Service
SDI	Steel Deck Institute
sec	second
SJI	Steel Joist Institute
SMACNA	Sheet Metal and Air Conditioning Contractors National Association
SPT	Standard Penetration Test
SSC	Structure, System and Component

List of Acronyms and Abbreviations *(Continued)*

STD	Standard (DOE)
SWM	Solid Waste Management
SWPPP	FERMCO Storm Water Pollution Prevention Plan
TBC	To Be Considered
TBP	Tributyl Phosphate
TEMA	Tubular Exchanger Manufacturers Association
TOC	Total Organic Carbon
TSDF	Waste Treatment, Storage or Disposal Facility
UBC	Uniform Building Code
UCRL	University of California Research Laboratory
UL	Underwriters Laboratory
USCS	Unified Soil Classification System
USEPA	United States Environmental Protection Agency (EPA)
V	Volt
WAC	Waste Acceptance Criteria
WESP	Wet Electrostatic Precipitator
WPRAP	Waste Pits Remedial Action Project
WTS	IT Corporation Wastewater Treatment System
yd^3	cubic yard
yr	year

1.0 INTRODUCTION

This document provides the design criteria and assumptions utilized for the design and specification of the waste material excavation, preparation, drying, and blending processes, as well as for associated activities such as the treatment of rain and waste waters. The characteristics of the wastes impact much of the design activities, especially the design of the indirectly heated rotary dryer and its associated gas cleaning system. A summary of waste material characterization is provided in Appendix A to this document. Deviations in the actual waste materials and other site parameters from these criteria, assumptions, and characteristics can significantly impact the waste pit remediation process.

Section 2.0 of this document provides the performance, design basis, and assumptions utilized in the design and specification of the process from the excavation of waste to the loading of treated material into railcars for off-site shipment. Section 3.0 describes the applicable regulatory requirements and compliance demonstrations that impact the site processing activities. Section 4.0 describes the waste acceptance criteria that the wastes have to meet to be shipped off site, or that processing wastes (i.e., wastewater, etc.) have to meet to be discharged from the processing area. Section 5.0 lists the various DOE orders that impact the excavation and processing of the waste materials. Section 6.0 describes the pre-operational decontamination and dismantlement (D&D) philosophy utilized in the system design. Section 7.0 describes the specific design criteria associated with the design of the waste processing equipment and buildings.

2.0 SYSTEM PERFORMANCE, DESIGN BASIS, AND ASSUMPTIONS

General Requirements

Description of the Remedial Activities. In accordance with remedial requirements set forth in the ROD, the selected remedial activity for OU1 consists of waste pit excavation, waste segregation and preparation, thermal drying and off-gas treatment to remove excess moisture, loadout and removal to an off-site CDF. The selected remedial actions will include the following key activities:

- Construction of waste processing, treatment, and loadout facilities
- Removal of excess water from open waste pits to the existing on-site Advanced Wastewater Treatment (AWWT) facility.

- Removal of waste pit contents, including caps, liners and surrounding contaminated soils
- Confirmation sampling and analysis of waste pit excavation area (following removal of contaminated materials) to verify achievement of remediation levels
- Waste preparation, including waste segregation, screening, size reduction and blending
- Thermal drying of waste, as required to meet the WAC for the disposal facility
- Sampling and analysis of waste material prior to shipment to ensure material meets the WAC of the disposal facility
- Loadout and shipment of waste material to off-site disposal facility
- Decontamination, decommissioning and/or disposal of all process equipment and facilities
- OU1 site restoration.

General Process Assumptions. Several design criteria cannot be verified until WPRAP field operations are commenced. Process assumptions have been made throughout the WPRAP design based on existing data and process knowledge, however, the following design issues/assumptions will require field verification.

- Material Handling - Material is capable of being conveyed with appropriate design which includes vertical hopper sidewalls, positive material movement such as screws, and minimized transfer points.
- Dryer and Off-Gas Treatment - Material is capable of being dried in an indirect-fired dryer without excessive fouling that would inhibit heat transfer rates.
- Inspection of the waste pit data during the RD process indicated measured quantities of total organic carbon (TOC) in the waste pits. The TOC may be from a variety of sources including: graphite crucibles, charcoal, wood, asphalt, tars, solvents, oils and greases. The dryer will be operated to minimize unnecessary volatilization of organics while meeting the drying commitments for the pit waste. The Air Pollution Control (APC) system provides for condensation of organics that may be volatilized during the drying system, and for carbon scrubbing of the gases exiting the kiln to control organic emissions.

  The design assumes that the average TOC in the pits is 12 percent on a mass basis. Additionally 35 percent of the TOC are volatile compounds (not fixed carbon). Should this fraction differ in operation in actual conditions such that a greater

percentage of volatiles are encountered, the thermal dryer off-gas system may not accommodate sustained operation due to organic fouling.

- Blending and Railcar Loadout - The characteristics of the excavated waste material will allow classification utilizing conventional equipment.
- Water Treatment - Contaminated water from the excavation and from the process area can be treated using conventional precipitation, filtration, and adsorption technologies.
- Drainage performance of in-pit dewatering process such as sumps and dewatering wells.
- Water in flow to pits during excavation.
- Optimum proctor moisture for blended waste.
- Requested variances from optimum moisture content from CDF facility.
- Boundaries of the Burn Pit excavation.
- Depth of directed excavation below pit liners.
- Delivery schedule and quantities of OU1 Contaminated Soil Stockpile materials.
- Actual quantities and composition of non-typical waste.
- Variability of waste for blending criteria of depleted/enriched uranium.
- Density and moisture content.
- Respiratory protection requirements for each area.
- Inhomogeneity of blended wastes for compliance with the WAC; and other areas where we may be making assumptions that are not fully defined.

A summary of design requirements for the primary remediation activities is discussed in the following sections.

2.1 Waste Excavation

2.1.1 Functional Requirements

- The waste material to be excavated consists of the OU1 Waste Pits 1, 2, 3, 4, 5, 6, Clearwell, and Burn Pit (including waste pit caps, contents, and liners and contaminated soil below the pits).

- Mechanical excavation will be the primary method of waste excavation to limit the subsequent waste dewatering that would be necessary if hydraulic excavation were used.

- Excavated waste will be transferred to the process area using conventional material handling equipment.

- Contaminated materials from other FEMP projects will be delivered periodically by FDF to a common stockpile area (OU1 Contaminated Soil Stockpile). This material will be transferred to the processing area on a periodic basis as required to manage stockpile size.

- Excavation sequencing will take into account the need to blend materials from two or more pits concurrently to facilitate blending for radiological, moisture, and density constraints.

- Excavation will be performed so that the pit area remains classified as an "Other Industrial Facility" as defined by DOE-EM-STD-5502-94 and based upon separate segmentation of the pit area excavation facilities and activities from the waste processing and railcar loadout facilities and activities.

- Large debris will be segregated from waste in the pit area to avoid excessive handling.

- Excavation activities will be defined by two phases. Phase I will be the neat-line excavation of the waste pit caps, waste, and liners. Phase II will be the excavation of any contaminated soil below the pit liners. The bottom of waste pit liners are defined on the waste pit construction drawings (Figures 2-1 and 2-2) and the schematic on Figure 2-3.

- All excavated material from Phase I will be disposed of at the CDF except certain nontypical waste.

- Phase II excavation will be directed by FDF. The depth of excavation and final disposition of the excavated soils will be based on FDF sampling and analysis.

- Excavation will include the removal of any pumps, utility lines, monitoring wells, and other appurtenances within the waste pit area boundary (see Figure 2-1) which are encountered during the excavation of the waste pits and surrounding soils. Specifically included in this is the Clearwell Pump House. These materials will be handled (e.g., disposed) consistent with the handling of debris from the waste pits.

- Run-on control measures will be implemented to reduce the volume of contaminated water sent to treatment. Existing perimeter storm water controls will be kept intact.

- Any freestanding water will be removed from the excavation to minimize infiltration of contaminated water to the soil and aquifer below the pits

- Water entering the excavation will include leachate from saturated zones within the waste and possibly water from perched water zones surrounding the waste pit area.

- Dewatering and excavation activities may occur simultaneously.

- Water collected in the pit excavation area will be discharged to the BSL. This water will require suspended solids removal and may require other water treatment prior to the BSL per the BSL WAC.

- Airborne dust emission will be minimized or eliminated during pit excavation by meeting the criteria included in Ohio Administration Code (OAC) 3745-31-05, which includes the use of Best Available Technology (BAT) to control emissions.

- Trucks used for transporting dry waste will utilize protective measures to control dust dispersion.

- Contaminated soil (soil having contamination levels above the Final Remediation Levels) will be disposed of at the CDF or OSDF.

- All pit wastes, pit caps, and pit liners will be treated as required to meet the disposal requirements of the CDF.

- Any nontypical waste encountered in the pit waste, which does not meet the CDF WAC and cannot be processed to meet the WAC will be segregated for transfer to FDF.

2.1.2 Design Criteria

- The as-built dimensions and features of the waste pits are defined by Figure 2-1 and Figure 2-2.

- Estimated volume of material to be excavated, processed, and disposed of (in-situ volumes). Reference Figure 2-3.

- Phase I - Neat-Line Excavation Waste (including caps and liners)	628,200 cubic yards
- Phase II - Directed Excavation Contaminated Soil below Pit Liners (assuming 3 feet)	83,640 cubic yards
- Contaminated Materials from other FEMP Projects (processed and loaded only)	47,600 cubic yards
Total	759,440 cubic yards

The average in-situ moisture contents of pit wastes have been estimated based on existing waste pit data and are given in the Excavation Plan.

- The moisture content of waste to be processed (as delivered to the treatment system) has been estimated based on existing waste pit data and the solids recovery of the selected excavation technique. These data are given in the Excavation Plan.

- Excavation rates and schedule are given in the Excavation Plan.

2.2 Waste Blending

2.2.1 Functional Requirements

- Wastes from two or more pits may be mixed together to improve workability or to meet the WAC for the CDF for the radiological, moisture content, or density criteria.

- High moisture content pits will be blended with lower moisture content pit wastes to provide a steady thermal load to the dryer.

- Low bulk density wastes will be blended with higher bulk density wastes to provide weight limited railcar loading.

- Enriched uranium waste sources will be blended with depleted uranium waste sources to provide shipped waste materials that will qualify as depleted.

- Low radiological WAC factor waste sources will be blended with high radiological WAC factor waste sources to provide shipped waste materials, which meet the radiological WAC.

- Waste processed through the dryer may be blended with wastes which have bypassed the dryer in order to meet the WAC.

  - Blending <u>cannot</u> be done for the purpose of diluting characteristically hazardous waste to render it nonhazardous.

2.3 Waste Preparation

2.3.1 Functional Requirements

- Debris greater than 4 inches in size will be removed from the waste prior to processing through the dryer.

- Uranium derbies and other non-typical wastes will be removed from the pit waste and segregated for disposal in accordance with site procedures.

- Waste will be temporarily stockpiled adjacent to the thermal dryer and railcar load-out areas to provide a process surge capacity in case of temporary interruptions in waste excavation to facilitate continuous dryer operation.

- Stockpiled waste will be covered or otherwise managed to prevent wind dispersion and control waste runoff.

- Stockpile size will not exceed the limits determined to be necessary to maintain the "Other Industrial Facility" classification as defined by DOE-EM-STD-5502-94 and based upon separate segmentation of the pit area excavation facilities and activities from the waste processing and railcar loadout facilities and activities.

- Waste material and debris will be size reduced as required to meet the CDF WAC. Nonshreddable waste may be size reduced in the pit area or the Material Handling Building. Size reduction activities may include cleavage of debris with equipment bucket/blade; run over by equipment track; cleavage with equipment mounted ram, jaws, or other device; flame cutting.

2.3.2 Design Criteria

Debris screening or separation rate:	100 tons per hour
Debris size reduction rate:	5 cubic yards per hour
Debris separation and sizing schedule:	24 hours/day, 7 days/week max. 16 hours/day, 5 days/week normal
Waste stockpile size:	
Material Handling Bldg:	11,400 tons approximate
Waste stockpile size:	
Railcar Loadout Bldg:	3,600 tons approximate

Non-typical waste types:	Pyrophoric materials (uranium metal) Compressed gas cylinders Transformers Unopened, intact drums PCB wastes Large debris (mechanical equipment or reinforced concrete) Thorium metal/oxides Asbestos

2.4 Dryer Feed System

2.4.1 Functional Requirements

- The dryer feed system will be used to transfer waste materials to the dryer at a controlled rate.
- The system will be capable of handling a wide range of waste moisture contents and physical properties.
- The system will minimize air infiltration to the dryer.

2.4.2 Design Criteria

Feed Rate to Dryer:	50 tons/hr Max. 30 tons/hr Normal
Feed Size:	4 inch minus
Feed Moisture Range:	20% to 80% wet basis
Operating Schedule:	Same as thermal dryer

2.5 Thermal Dryer

2.5.1 Functional Requirements

- The thermal dryer will meet the USEPA's definition of a sludge dryer which states: "A sludge dryer means any enclosed thermal treatment device that is used to dehydrate sludge that has a maximum total thermal input, excluding the heating value of the sludge itself, of 2,500 Btu/lb of sludge treated on a wet weight basis." Thermal drying will not be performed using any device which meets USEPA's definition of an incinerator.
- The drying chamber will be sealed and maintained under a negative pressure to minimize the release of pollutants to the environment. Exhaust from the drying

chamber and the furnace will be treated in accordance with the applicable requirements for air emission limits.

- The drying system will conform to applicable fire and safety codes and standards.

- All conductive surfaces that personnel may potentially contact will be designed to stay at or below 125EF, and all nonconductive surfaces such as insulation or plastic that personnel may potentially contact will be designed to stay at or below 150EF. If this cannot be achieved, a protective guard will be supplied to keep personnel from contact with such surfaces.

- The dryer will use natural gas and/or fuel oil as fuel for the dryer burners.

2.5.2 Design Criteria

Design Feed Rate:	10 to 30 tons/hr @ 40% H_2O (wet basis)
Moisture Removal Rate:	7.65 tons/hr H_2O removal Avg. 10 tons/hr H_2O removal Max.
Product Moisture Content:	10 to 20% H_2O (wet basis)
Burner Fuels:	No. 2 Fuel Oil Natural Gas
Natural Gas Supply:	850 scfm interruptible @ 40 to 50 psig; 47 psig annual avg.
Operating Schedule:	24 hrs/day, 7 days/wk Max. 24 hrs/day, 5 days/wk Normal

2.6 Gas Cleaning System

2.6.1 Functional Requirements

- Dryer process off-gases will be treated to control toxic, particulate, and radiological emissions, per applicable regulatory standards, prior to discharge to the atmosphere.

- Emissions from the gas cleaning system will be via a process exhaust stack which will be considered a point source.

- Radon emissions from the gas cleaning system stack will meet a stack discharge limit based on a maximum allowable off-site impact of 0.5 pCi/L annual average. The stack limit for radon will be determined by FDF using a site-wide model and the point source emissions estimate from the process design.

- Radionuclide emissions, excluding radon, will meet 40 CFR 61, subpart H.

- Point source emissions that exceed the maximum allowable ground level concentrations (MAGLC) at the site boundary must also apply BAT, as required by Ohio EPA. Using BAT at all point sources covers toxic, particulate, and radiological emissions except radon emissions from point sources.

2.7 Railcar Loadout

2.7.1 Functional Requirements

Railcar Loadout

- Waste will be loaded into FDF-provided railcars at a rate that will satisfy the yearly production rates and will not exceed the physical or supply limitations of the railcars.

- Railcar transportation to the off-site CDF will be coordinated and controlled by FDF to support the shipment of between 108,000 and 135,000 tons of waste per year. Off-site shipment of waste will be coordinated on a site-wide basis, with WPRAP as a lead for rail shipment to the CDF.

- Railcars will be moved inside the loadout area using a trackmobile (provided by FDF) of suitable size to handle at least four filled railcars.

- Railcars will be loaded by mobile earthmoving-type equipment. Emissions will be controlled to meet applicable ARARs, dust/fugitive emission control requirements, radiological and health and safety requirements. The loading concept will incorporate the principles of ALARA.

- Debris will be placed in the railcars in accordance with the CDF WAC.

- The exterior, wheels, brakes, and other exposed sections of the railcars and all track sections will be protected as much as practical during all loading operations and at any other time processed waste materials have the potential to contact the railcar exterior.

- The railcar and cover will satisfy DOT regulations 49 CFR 173, 427, and 174.700(f), which specify that LSA material be transported in a "strong tight package" in a closed transportation vehicle, under exclusive use conditions. A strong tight package is a package that will prevent the release of any radioactive material under normal transport conditions.

- Each railcar will be lined, filled with CDF WAC compliant material, sealed (liner and lid), weighed, decontaminated (as necessary), radiologically surveyed to meet

DOE and DOT requirements, and transferred to FDF for transport off site to the CDF.

- In the event that a railcar is rejected at the CDF and returned to the FEMP because its contents do not pass the WAC according to the CDF, the railcar will be unloaded in the loadout area using conventional earthmoving equipment.

Railcar Liners and Covers

- Liners will be placed in railcars prior to the placement of waste material into the railcar. Liners will be of a construction to resist tearing during normal loading operations. Each liner will be disposed of with the waste at the CDF.

- The liner will be folded over the waste, and secured, after loading.

- Hard covers (lids) will be placed on filled railcars following liner securement.

- Hard covers (lids) will be provided (by IT) for each of the railcars. Any covers which sustain damage due to normal wear and tear during transport or handling will be repaired or replaced as required.

- Covers, installed on railcar, will meet DOT criteria 49 CFR 173.403(c).

- Covers will be used on open-top gondola cars.

2.7.2 Design Criteria

- The estimated tonnage of material that will be loaded into railcars for transportation to the CDF based on estimated in-situ conditions and assuming fluffing factors and final moisture contents.

- Waste (including caps and liners)	456,601 tons
- Contaminated soil below pits (assuming 1.5 feet deep)	79,458 tons
- Contaminated material from other FEMP projects	90,440 tons
- Total to CDF	626,499 tons

- The estimated tonnage of material that will be loaded into containers and disposed of in the OSDF based on estimated in-situ conditions and assuming fluffing factors and final moisture contents.

- Contaminated soil below pits (assuming an additional 1.5 feet below the soil bound for the CDF)	79,500 tons
- Estimated total to CDF and OSDF	705,999 tons

- Railcar loading criteria:
  - Average estimated number of railcars available for loading during years 1999 - 2004: 47 railcars every 16 calendar days
  - Maximum estimated number of railcars available for loading during years 1999 - 2004: 58 railcars every 16 calendar days
  - Maximum estimated weight of material which can be loaded into a railcar: 108.17 tons
  - Maximum estimated volume of material which can be loaded into a railcar: 87.84 cubic yards (with a minimum 9-inch freeboard)
  - Waste shipment rate to the CDF: up to 112,149 tons/yr
  - Each railcar will be loaded to meet either maximum weight or maximum volume limit, whichever occurs first (+0% / -0.5%).
- The cycle time for transportation and disposal to the CDF and return of empty railcars to FDF is approximately 18 calendar days.
- Estimated railcar loadout rate: 8 cars/day Maximum
  6 cars/day Average
- Operating Schedule: 16 hrs/day, 5 days/wk Normal
- Railcar
  - Total number of railcars available: 135 cars (provided by FDF)
  - Railcar type: Low-side gondola
  - Approximate box dimensions (interior): 52 feet length
    9.5 feet width
    5.5 feet height
  - Coupler-to-coupler length: 57 feet
    (This length affects the track needs for storage)
- Railcar Hard Covers (Lids)
  - Covers will be of reusable, rigid, modular fiberglass construction, ECOFAB railcar cover or equal.

- Covers will have manual locking mechanism, ECOFAB or equivalent.

2.8 Site Water Management

2.8.1 Functional Requirements

- Wastewater or contaminated storm water collected from the WPRAP work areas shall be transferred directly either to the Biodenitrification Surge Lagoon (BSL), or for non-process wastewater and contaminated storm water, indirectly to the BSL via the Clearwell, prior to entering the Advanced Wastewater Treatment (AWWT) for final treatment.

- The maximum average 24-hour flow rate of all wastewater and contaminated storm water streams from the WPRAP work area to the BSL should not exceed 200 gallons per minute. This includes streams currently being discharged from the Waste Pit Area such as the surface water runoff collected in the Clearwell.

- The peak flow rate of all wastewater and contaminated storm water streams from the WPRAP work area to the BSL should not exceed 2,650 gpm. If the level of the water in the BSL reaches the 12-hour alarm level, the AWWT Operations Manager may request the WPRAP and other site projects to prepare for flow reductions or terminations within the 12-hour period following the alarm. The sequence of stream flow reductions or termination will generally follow a predetermined site-wide priority list that will be based on the impact of releasing each stream untreated to the environment.

- Measures will be taken to provide pretreatment to remove suspended solids. The concentration of suspended solids in the water (from any source) delivered to the BSL should not be greater than 1000 ppm.

- Dissolved concentrations of heavy metals in any wastewater effluents to the BSL should not exceed the clean Water Act (CWA) Toxic Notification Levels as stated in 40 CFR 122.42, (1) (i) & (ii) for the CWA Section 307 Toxic Pollutants. If treatment for heavy metals is determined to be necessary, pH adjustment, such as lime addition, followed by settling and possibly flocculation, may be used as a treatment method.

- No wastewater shall be discharged to the BSL that exhibits the characteristics of a RCRA waste.

- Thorium-230 and thorium-232 concentrations in any wastewater effluents to the BSL shall not exceed 300 pCi/l and 50 pCi/l, respectively.

- Total Dissolved Uranium should not exceed 5,000 ppb in any wastewater effluents to the BSL.

- As a minimum, discharges to the BSL shall be monitored and reported to FDF for the following constituents:

  Arsenic
  Cadmium
  Chromium
  Copper
  Cyanide
  Nickel
  Silver
  Radium-226
  Thorium-230
  Thorium-232
  Total dissolved uranium
  Chloride
  Nitrates
  1,1,1-trichloroethane
  tetrachloroethane
  1,1-dichloroethane
  1,1-dichloroethene
  Chloroethane
  pH
  Suspended solids

- The quantity of contaminated storm water from the 10.5-acre WPRAP process area shall be minimized by hydraulically segregating clean area runoff from potentially contaminated runoff. Clean runoff could include building roof drainage and runoff from areas not in direct contact with the waste. Contaminated runoff would come from areas that are in direct contact with waste or have a high potential of coming in contact with waste such as stockpile areas and roadways. "Clean" storm water shall be discharged into the ditches surrounding the process area that discharge directly to Paddys Run. Process area storm water shall be directed into the storm water management pond in the northern portion of the subcontractor's work area.

- All flow streams discharged to the BSL shall be metered with a flow totalizer and flow meter.

- Water discharges to the BSL should have a pH of between 6 and 10.

- Storm water will be used for washing or dust control, where feasible, to minimize the volume of water requiring treatment.

- All wastewater discharges at the FEMP are, and will continue to be, covered by a National Pollutant Discharge Elimination System (NPDES) Permit. Wastewater and storm water discharges from the WPRAP are required to be covered by the

FEMP NPDES Permit. The FEMP currently discharges under Ohio EPA Permit No. 11000004*ED. The current permit expires March 31, 1998.

FDF will prepare the necessary permit application to successfully obtain the permit under which the WPRAP will be allowed to discharge. To support the permit renewal application process, or permit modification process, IT will supply information such as process descriptions (sizing, throughput, etc.), water balances, material balances, analytical data, etc., to sufficiently characterize the effluent discharge from the WPRAP. Pollution prevention and recycling of waste streams must be considered in all processes in anticipation of any anti-degradation review deemed necessary by Ohio EPA.

- Wastewater includes, but is not limited to, water that free-drains from the pit waste in the excavation or during storage (e.g., waste in stockpiles), water that enters the excavation either from surrounding perched water tables or from precipitation, condensed water vapor, decontamination water and off-gas system bleed streams.

- Wastewater shall be pretreated as necessary to meet the WAC of the existing FEMP Advanced Wastewater Treatment (AWWT) system.

- The site water management design will have features designed to prevent the introduction of any substances or materials into any stream, lake, aquifer, or other body of water which may pollute or degrade the water or constitute substances or materials deleterious to fish and wildlife.

2.8.2 Design Criteria

- New storm water management systems shall be designed for the 25-year, 24-hour storm per FEMP site policy. ("Rainfall Frequency Atlas of the U.S.," Technical Paper 40, U.S. Department of Commerce, provides levels for this storm event for the FEMP.)

- Open channels will use the 5-year storm for evaluating velocity. ("Rainfall Frequency Atlas of the U.S.," Technical Paper 40, U.S. Department of Commerce, provides levels for this storm event for the FEMP.)

- Storm water management basins will be designed to safely pass the 100-year, 24-hour storm. ("Rainfall Frequency Atlas of the U.S.," Technical Paper 40, U.S. Department of Commerce, provides levels for this storm event for the FEMP.)

- Storm drain systems not directly connected to the storm water management system, with catchments less than 160 acres, may be designed by the rational method.

- Those storm drain systems directly connected to an existing storm water management system shall be designed by SCS methods (e.g., TR-55, TR-20). No storm

drains currently exist in the work area that drain to the existing storm water management system.

- Design details, construction methods, and materials shall be in accordance with ODOT standards.

Meteorological Data:

- The average annual rainfall in the area is 40.14 inches/year
- The 25-year/24-hour storm event consists of 4.8 inches of precipitation in a 24-hour period.

3.0 APPLICABLE REGULATORY REQUIREMENTS AND COMPLIANCE DEMONSTRATIONS

Substantive Permitting Requirements Crosswalk

The OU1 ROD established thermal drying and the subsequent off-site disposal of OU1 wastes at a CDF as the selected remedy for the OU1 remedial action. The OU1 ROD also established the ARARs that must be followed to ensure that OU1 remedial activities are conducted in compliance with the substantive requirements of existing federal, state and local environmental laws and regulations.

OU1 remedial activities are regulated in the CERCLA, as amended by the Superfund Amendments and Reauthorization Act of 1986. CERCLA, as well as the National Oil and Hazardous Substances Pollution Contingency Plan (NCP) and 40 CFR Part 300, specify that on-site remedial actions are exempt from the requirements to obtain formal permit approval, provided these actions are conducted in compliance with the substantive requirements of applicable and/or relevant and appropriate federal, state and local permits and regulations.

To comply with these requirements, the DOE is required to provide the USEPA and the Ohio EPA with information demonstrating how remedial activities will comply with substantive permitting and ARAR-driven requirements associated with the selected remedy for each operable unit at the Fernald site. The DOE has committed to providing this information in the form of Permitting and ARAR Crosswalk Tables, in which all substantive permit and ARAR-related requirements are identified along with a description of where in the design package the particular requirement is specifically addressed.

This section provides an overview of specific substantive permitting and ARAR-driven requirements associated with the OU1 remedial action. Table 3-1 shows the ARAR compliance strategy. Table 3-2 shows a detailed listing of all substantive permitting requirements associated with the OU1 remedial action and references the specific sections of the design submittals where additional information on these requirements are addressed.

3.1 Substantive Permitting Requirements for Air Contaminant Sources

Applicability of Air Permit Program. The OU1 remedial action consists of the excavation and thermal drying of material contained in the waste pits. As a result of these activities, several sources of fugitive and point source emissions of regulated air contaminants will exist. These sources are subject to compliance with the provisions of existing federal and state air control regulations.

Substantive Air Permitting Requirements Associated with OU1 Remediation. Under the federally enforceable NESHAP (40 CFR 61 Subpart H), radiological emission from all sources at the site are limited to an annual effective dose equivalent of 10 mrem per year. Pursuant to the NESHAP, emission estimates must be prepared for fugitive and point-source air emissions associated with the OU1 remedial action to demonstrate compliance with the exposure standard. Each potential air emissions point source must be evaluated (using the appropriate modeling techniques) prior to placement to determine permitting and monitoring requirements. Specifically point sources with the potential for releases that could exceed a 0.1 mrem per year dose to any member of the general public on an uncontrolled based must be continuously monitored. In addition, a notice of project completion for sources that exceed a 0.1 mrem/yr dose to any member of the general public on a controlled basis is required.

In addition to the federal requirements described above, the substantive permitting requirements of Ohio EPA's PTI and PTO (OAC 3745-31 and 3745-35, respectively) rules are applicable to air contaminant sources associated with the OU1 remedial action, The use of Best Available Technology (BAT) to control air pollutant emissions is included under these requirements.

Compliance Strategy. Specific compliance strategies for the substantive air permitting requirements associated with the OU1 remediation are given in Table 3-2a.

Other Air Regulatory Issues

1) Required documentation will be prepared to demonstrate compliance with the substantive requirements of the air permitting regulations. Emission rates and ground level concentrations (GLC) of the constituents of concern (COCs, including the air toxins, particulates, and radon) will be estimated based on the specified air pollution controls.

2) A Performance Test Criteria for dryer emissions will be prepared and a performance test conducted by an independent contractor. The independent firm performing the stack sampling will also be qualified to prepare the Performance Test Criteria.

3) FDF will conduct air dispersion modeling using the existing site-wide modeling program and the data from the performance test. The dispersion modeling used will determine the dispersion coefficient based upon the actual temperature, flow rate, and diameter of the two stacks (the dryer off-gas stack and the furnace stack). The dispersion coefficient will be used to determine the GLCs of the COCs and compare these values to the ambient air criteria for each COC.

3.2 Substantive Permitting Requirements for Wastewater and Storm Water Streams

Applicability of NPDES Permit Program. Section 402 of the Clean Water Act (CWA) established the National Pollutant Discharge Elimination System (NPDES) permit program. The program is implemented in accordance with regulations promulgated in 40 CFR 122 through 136, which regulate the point source discharge of wastewater to Navigable waters of the United States through the issuance of NPDES permits. NPDES permits are designed to specify discharge limitations necessary to comply with applicable technology-based effluent standards and/or water quality-based standards. NPDES permits typically include monitoring requirements and additional conditions regulating point source discharges. Discharges of storm water from specific types of activities have also been included under the NPDES permit program. Authority for administering the NPDES permit program within Ohio has been delegated to the Ohio EPA.

NPDES Permitting Requirements. The DOE, USEPA, and Ohio EPA have agreed that off-site discharges of process wastewater and storm water generated during the course of the CERCLA remedial action will be subject to compliance with both the substantive and administrative provision of the Ohio EPA's NPDES permit program. OU1 discharges will be treated within the FEMP wastewater treatment system prior to discharge to the Great Miami River. Surge capacity and primary settling of OU1 wastewater will be provided at the BSL. Final treatment of OU1

process wastewater will be provided at the AWWT. Process wastewater will be produced during initial dewatering of waste pits, waste excavation and handling operations and dryer system operations. Storm water runoff currently being collected in the waste pit area will also continue to be processed through the existing wastewater treatment system via the waste pit storm water collection system.

A new industrial storm water outfall to Paddys Run was established during FDF's Site Improvement Activities for OU1. Discharges from this outfall will be comprised of overflows from the new storm water management basin that will be used to collect storm water runoff for the waste processing area. Establishment of this outfall constitutes a new point source discharge of industrial storm water, and as such is subject to the provisions of the Ohio EPA's NPDES permit program.

Process wastewater and storm water discharges associated with the OU1 remedial action will be treated at the AWWT to ensure compliance with the terms and condition of the existing NPDES permit. By permit condition, the DOE is required to notify the Ohio EPA of any activities or changes at the site which have the potential to significantly alter the character of the wastewater streams being discharged under its existing NPDES permit. A NPDES permit modification is required if the discharge is deemed significant enough to cause a change in the character of the wastewater stream. The DOE has evaluated process wastewater discharges associated with the OU1 remedial action and has determined that they are of significant nature to warrant a NPDES permit modification. The existing FEMP NPDES permit will be updated to reflect the addition of the new industrial storm water outfall to Paddys Run. Construction related storm water runoff will continue to be managed in accordance with the requirements of the existing FEMP NPDES permit and Storm Water Pollution Prevention Plan.

Compliance Demonstration. The DOE, USEPA and Ohio EPA have agreed that off-site wastewater discharges associated with the AWWT and any other point-source wastewater or storm water discharges to the Great Miami River or Paddys Run will continue to be permitted through the NPDES modification and renewal process. In order to comply with the requirements of this agreement, the existing FEMP NPDES permit will be renewed and/or modified to reflect process wastewater and storm water discharges associated with the OU1 remedial action. Table 3-2b describes NPDES-related permitting requirements associated with the OU-1 remediation.

Other Water Regulatory Issues

The existing NPDES permit will be modified by FDF to incorporate future discharges from OU1. Data, such as the volume and composition of all water discharges from the WPRAP OU1 remediation site, will be provided by IT and used to support these permit modifications.

3.3 Substantive RCRA Permitting Requirements

Applicability of RCRA Permit Program. Subtitle C of the Resource Conservation and Recovery Act (RCRA) requires that all hazardous waste treatment, storage or disposal facilities (TSDF) obtain RCRA Part A and Part B permits. Part A permits include basic information about the TSDF, such as its name, location and types of activities performed at the facility. Part B permits require more detailed information about the TSDF, and include the types of wastes to be handled, groundwater monitoring plans and facility design information. These permit requirements are established in 40 CFR 270 and reflect the requirements of 40 CFR 264. The administration of the RCRA permitting process has been delegated to the Ohio EPA.

Substantive RCRA Permitting Requirements Associated with the OU1 Remediation. The FEMP must characterize waste materials to determine whether or not they are hazardous in accordance with the requirements of 40 CFR 262.11 (OAC 3745-52-11).

The June 1996 Director's Findings and Orders between Ohio EPA and DOE specify that demonstration of compliance with substantive closure and post-closure requirements for hazardous waste management units will be documented in the remedial design and remedial action deliverables.

Compliance Demonstration. Excavation, size reduction, homogenization, blending and drying of OU1 pit wastes will be conducted to produce a single waste stream that will be shipped off-site for disposal at a CDF. Prior to shipment, wastes will be analyzed to determine if they meet the CDF WAC. If, during waste acceptance criteria testing, RCRA characteristic wastes are identified, the waste will be segregated for turnover to FDF for disposal

Substantive RCRA permitting requirements and hazardous waste management unit closure and post-closure requirements associated with the OU1 remedial action are addressed in Table 3-2c.

3.4 Substantive Permitting Requirements for Wetlands and Waters of the U.S.

Applicability of Clean Water Act Wetland Permit Programs. Pursuant to section 404 of the CWA, any activity that results in the discharge of dredge or fill material into waters of the U.S., including wetlands, requires permit authorization by the United States Army Corps of Engineers (ACOE). The ACOE authorizes dredge and fill activities within wetlands and other waters of the United States through the issuance of permit under its Nationwide or Individual Permit Programs (33 CFR Parts 330 and 332, respectively). In instances where discharges of dredge and fill material are associated with CERCLA removal and remedial actions, the ACOE has delegated responsibility for ensuring discharges are conducted in accordance with Sections 401 and 404 of the CWA to the USEPA.

In addition to the federally enforceable permitting requirements mandated under Section 404 of the CWA, individual states are delegated responsibility for ensuring discharges of dredged or fill material conducted within their border comply with the requirements of Section 401 of the CWA. In Ohio, the Section 401 State Water Quality Certification program is administered by the Ohio EPA pursuant to OAC 3745-32.

Substantive Permitting Requirements Associated with the Remedial Action. Impacts to wetlands and waters of the United States were considered during selection of the OU1 selected remedy as documented in the OU1 ROD. Although the DOE has avoided and minimized wetland impacts to the maximum extent practicable during its remedial design efforts, approximately 4.96 acres of headwaters and isolated jurisdictional wetlands will be dredged and/or filled as a result of the OU1 remedial action. Because the OU1 remedial action will result in the dredging and filling of these jurisdictional wetlands, the substantive permitting requirements mandated under the implementing regulation of the CWA Section 404 and 401 permit Programs are applicable to the OU1 remedial action.

Based upon review of ACOE Nationwide permits promulgated in Appendix A of 33 CFR Part 330, the DOE has determined that impacts associated with the OU1 remedial action meet the substantive terms and conditions of Nationwide Permit 26, and therefore would have been authorized under this Nationwide Permit in absence of the CERCLA Section 12(e) exemption. The Ohio EPA granted its corresponding Section 401 State Water Quality Certification for Nationwide Permit 26 in January 1992.

The specific terms and conditions of Nationwide Permit 26 that must be followed for discharges to be authorized under the Nationwide Permit are promulgated in Appendix A of 33 CFR Part

330. Of these, only those requirements which are deemed substantive in nature are considered applicable to the OU1 remedial action. Substantive permitting requirements mandated under the Ohio EPA's corresponding Section 401 State Water Quality Certification are limited to restrictions on the acreage of dredge and fill activities and on discharges to special aquatic areas such as bogs and fens. The substantive permitting requirements of Nationwide Permit 26 and its corresponding Section 401 State Water Quality Certification that are applicable to the OU1 remedial action are given in Table 3-2a.

Compliance Demonstration. The unavoidable 4.96 acre impact that will result from OU1 remedial action will be conducted on accordance with the substantive permitting requirements of Nationwide Permit 26 and its corresponding Section 401 State Water Quality Certification, including soil and erosion control and wetland mitigation. To avoid a piece-meal approach to mitigation, wetland impacts will be mitigated on a sitewide basis. Documentation addressing how specific mitigatory requirements will be addressed will be submitted pursuant to the schedule established in the OU5 Remedial Design Work Plan.

4.0 WASTE ACCEPTANCE CRITERIA

Several waste streams will be generated from the remedial activities that must meet various waste acceptance criteria. These waste streams will include:

- Solid waste (construction, D&D, pit wastes)
- Contaminated soil waste
- Wastewater
- Storm water.

The solid, soil and liquid waste streams will be sampled to ensure that they meet all onsite waste acceptance criteria before onsite disposal, or all CDF waste acceptance criteria before shipment off site. The waste acceptance criteria for on-site transfer of waste water is discussed in Section 2.8.1. Storm water discharge criteria is also referenced in Section 2.8.1.

Disposition and waste acceptance criteria for construction waste are addressed in Section 6.0 of the Site Preparation Package. Disposition and WAC for D&D wastes will be addressed in the D&D Implementation Plan.

4.1 On-Site Disposal Facility

All OU1 waste, liners, and caps must go to the CDF for disposal in accordance with the ROD. All waste pit wastes are specifically excluded from disposal at the OSDF regardless of contaminant concentrations. Only residual contaminated soils generated from the OU1 remedial activities may be amenable to disposal in the On-Site Disposal Facility (OSDF). The waste acceptance criteria for on-site disposal were established in the following documents:

- Final Record of Decision (ROD) for remedial actions at Operable Unit 2 (OU2 ROD) - Established a radiological waste acceptance criteria of 346 picoCuries/gram (pCi/g) of uranium 238 or 1,030 milligrams per kilogram total uranium for materials destined for the OSDF.

- Final ROD for remedial actions at Operable Unit 3 (OU3 ROD) - Established a radiological waste acceptance criteria of 105 grams technetium-99 for Operable Unit 3 remediation debris.

- Final ROD for remedial actions at Operable Unit 5 (OU5 ROD) - Established radiological and chemical waste acceptance criteria for Operable Unit 5 remediation solids destined for the On-Site Disposal Facility (OSDF).

These waste acceptance criteria are summarized in Table 4-1. The remediation materials sent to the OSDF from Operable Unit 3 may also include small material contributions from Operable units 1 and 4. Any structural debris resulting from the D&D of the remediation facilities from these latter operable units destined for the OSDF must meet the Operable Unit 3 waste acceptance criteria.

The following physical criteria must be met for all materials sent to the OSDF:

- Materials from various building components (steel, concrete, masonry rubble, finish components, etc.) shall be segregated at the staging area

- The maximum length of irregularly shaped materials or other components of a building superstructure or finish components shall be 10 feet

- The maximum thickness of irregularly shaped metals or components of a building superstructure shall be 18 inches

- The maximum thickness of concrete or other components of a building slab or substructure shall be 18 inches when the materials are part of a load of similar materials

- The maximum thickness of an individual concrete member or other component of a building or slab or substructure shall be 4 feet. When the item is handled individually and is a regular shape having no concrete protrusions greater than 18 inches
- Concrete reinforcement bars shall be cut within nominal 12 inches of the concrete mass
- The maximum thickness of uniform pallets of building cladding (e.g., transite panels) properly banded into rectangular shapes shall be 4 feet
- Regulated asbestos containing material (ACM) shall be double-bagged at the source and delivered unmixed with other materials
- ACM brick and commingled debris shall be double-contained and segregated at the source
- Piping having insulation of ACM shall be segregated at the source and delivered unmixed with other materials
- General building rubble consisting of wood, drywall, HVAC systems, electrical systems, plumbing systems, and minor equipment shall be sufficiently reduced in size to be gradeable into an 18-inch (1.5 foot) lift by equipment similar to a Caterpillar D8 bulldozer
- Equipment shall be drained of all oils and liquids
- Piping with a nominal diameter of 12 inches or greater will be split in half
- The maximum dimension of general building rubble consisting of concrete, masonry, and other similar materials shall be 18 inches.

Impacted materials brought to the OSDF should not be at such a high moisture content that impacted material placement and compaction activities are impeded. Soil should have a moisture content that allows the material to be compacted to the required relative compaction using standard soil compaction equipment and procedures. Soil should also have a moisture content that does not result in excessive "bleeding" of liquids.

The following are specifically prohibited from disposal in the OSDF:

- Impacted material exceeding the Waste Acceptance Criteria (WAC) in Table 4-1

- Impacted material that is "characteristically hazardous" ("RCRA characteristic waste"), excluding characteristic waste that has been treated so that it is no longer characteristically hazardous

- Material from any off-site source, except for laboratory wastes generated at off-site facilities resulting directly from the chemical, radiological, and engineering analysis of FEMP waste contaminated media or wastes generated at off site facilities during the conduct of treatability or demonstration type studies on FEMP material

- Pressurizable gas cylinders

- Process-related metals (OU3 ROD Category C materials)

- Product, residues, and other special materials (a subset of OU3 ROD Category J materials)

- Materials containing free liquids

- Intact drums (drums must be empty and crushed)

- Acid Brick (OU3 ROD Category F materials)

- Transformers, which have not been either crushed or had their void spaces filled with grout or other material approved by the Fluor Daniel Fernald Technical Representative

- Whole or shredded scrap tires

- Used oils

- Materials not accompanied by the appropriate transportation "manifest" information.

4.2 Commercial Disposal Facility

The majority of OU1 remediation waste will be suitable for disposal at an off-site Commercial Disposal Facility (CDF). The CDF will provide the procedures that must be followed to characterize the waste and to verify acceptability of the treated and blended waste for acceptance. Before waste shipment, the disposal facility will require a waste profile and waste samples to establish a baseline for future shipments. This will be accomplished using sampling and analyses of the waste streams to determine their disposition for disposal. About six months are expected to be required to gain initial acceptance of the wastes stream.

000120

Analytical samples will be analyzed at the disposal facilities on-site laboratory. The OU1 on-site laboratory will be used to analyze treated waste samples prior to shipping to the CDF. Details of the sampling and analysis procedures and methodologies will be presented in the Sampling and Analysis Plan document.

The following criteria must be met for all materials sent to the CDF.

4.2.1 Physical Requirements

- Free Liquids - Radioactive waste containing free liquid shall not be accepted for disposal.

- Moisture Content - As-received dried waste shall have a moisture content within ±5 percent of the optimum moisture content as determined by the Standard Proctor test. The minimum moisture content is 5 to 7 percent to minimize dust generation.

  During the winter (December 1 through March 1), a drier product may need to be produced to prevent frozen railcars. Conversely, in the summer season, it is possible that less drying may be necessary.

- Amount of Debris - Debris is defined as any radioactive waste other than soils.

  Compactable debris:

  - Will pass through a 4-inch grizzly
  - Has a density greater than 70 pounds per cubic foot.

  Contaminated materials, other than soil, not meeting either of these criteria are defined as noncompactable debris. Wastes are limited to less than 10 percent by volume of compactable debris uniformly distributed throughout soil like wastes. Noncompactable debris in the form of concrete, stone, or metal may be uniformly spaced in soil-like wastes up to 25 percent by volume.

  The requirements for compactable and noncompactable debris apply as a whole to an entire unit train.

- Size of Debris - All debris shall be less than 10 inches in at least one dimension, and no longer than 8 feet in any other dimension.

4.2.2 Radiological Requirements

Specific Radionuclides

- The following radionuclides are commonly found at the FEMP:

- U-235
- U-238
- Th-230
- Th-232
- Th-234
- Ra-226
- Ra-228.

- For a material containing a mixture of radionuclides (e.g., A, B, and C) with respective concentrations (e.g., C_A, C_B, C_C), having the Maximum Average Waste Concentrations (MAWC) noted in Table 4-2, the following relationship must be met:

$$\frac{C_A}{MWC_A} + \frac{C_B}{MWC_B} + \frac{C_C}{MWC_C} \leq 1$$

- Radiological analyses, to date, show that homogenized, processed OU1 material will not exceed the maximum permitted average concentrations for all radionuclides.

  Waste shipments arriving at the CDF will be checked for radiological parameters vis-a-vis the established acceptance criteria. For radiological parameters, the data from the total number of checked shipping conveyances are averaged. Thus, samples from some of the conveyances may be up to 10 times higher than the acceptance criteria, provided that the average is within the limits of the Maximum Average Waste Concentration (MAWC).

Mixed Radionuclides

- The CDF must not dispose of substances until it has been determined that the concentration of radionuclides is approximately uniform except for debris superficially contaminated with radionuclides. The waste shall have approximately homogeneous characteristics for each radionuclide within each batch of materials, subject to the maximum radionuclide-specific limitations in the above-noted requirements.

4.2.3 Chemical Requirements

- Hazardous Waste Determination - Chemical analyses performed on the pit waste using the TCLP method indicates that the pits do not contain RCRA-characteristic waste. However, isolated pockets of hazardous substances may exist with concentrations that exceed the RCRA limits. Wastes will be characterized in accordance with the USEPA's hazardous waste regulations and the CDF's waste acceptance

criteria. Materials determined to be mixed wastes will be loaded into boxes and managed as non-typical wastes.

- Incoming-Shipment Acceptance Parameters - In addition to all of the parameters noted in this Section, concentrations of the following parameters determined by acceptance testing of shipments must correspond to measurements taken from pre-shipment samples:

  - Photoionizer "sniffer"
  - Air reactivity
  - Water reactivity
  - Paint filter liquid test or visual appearance
  - Pyrophoricity
  - Oxidizer/reducer
  - Shock sensitivity
  - Solid/soil pH
  - Cyanide test
  - Sulfide test.

- Asbestos - Wastes regulated as asbestos may not be accepted. However, this requirement does not prohibit the facility from accepting radioactive waste with some asbestos contamination. Such waste may be accepted on a case by case basis. Although a small portion of the OU1 waste may contain asbestos, the total is less than the regulatory threshold of one per cent. If readily separable asbestos-like material (e.g., double bagged material placed in Waste Pit 6) is encountered, this material should be managed as non-typical wastes.

- Polychlorinated Biphenyls - Polychlorinated biphenyl (PCB) contaminated wastes will not be accepted unless the PCB concentrations meet municipal solid waste disposal levels (less than 50 ppm). Wastes that exceed the 50 ppm regulatory threshold are not expected to be encountered. If PCB contaminated material is encountered, it should be managed as non-typical wastes.

- Chelating Agents - Chelating agents may be used at less than 0.1 percent by weight.

- Other - Wastes containing LLRW pathogens, infectious wastes, or other etiologic agents may not be sent to the CDF.

5.0 APPLICABLE DOE ORDERS

Components and systems will be designed, tested , and installed in accordance with the codes and standards listed in Tables 5-1 and 5-2, as applicable. Applicability will be based upon standard industrial practice or as required by applicable codes or DOE Orders. Where IT proposes using existing or pre-engineered components or systems that do not conform to the

applicable codes or standards, IT will document the codes or standards that were applied along with a justification for differing from the requirements.

Use of the latest editions or revisions of the codes and standards listed in Tables 5-1 and 5-2 shall be followed as applicable to the design, fabrication, assembly, and testing of all equipment furnished. Items that are not covered by the specifications and codes shall be in accordance with the individual manufacturer's standards and regulations as the manufacturer and IT, in the exercise of their knowledge, deems appropriate to produce a safe and reliable system.

6.0 PRE-OPERATIONAL D&D MEASURES

The requirements of the D&D phase will be incorporated into the pre-operational activities, including provisions in the design to maximize free release and recycling of materials. A listing of the pre-operational measures include:

Equipment

- Minimize and/or eliminate, to the extent feasibly possible, inaccessible areas as part of the equipment design and selection.
- Cover or protect, to the extent feasibly possible, inaccessible areas that remain using methods that include:
  - Smoothing out welds and rough surfaces
  - Using protective barriers to cover areas such as hydraulic and pneumatic fittings, grooved casing, and wiring bundles
  - Using strippable coatings on accessible porous materials and areas of high contamination potential, example - counterweights on heavy equipment.
  - Implementing an effective maintenance program to include the installation, frequent monitoring and replacement of filters on all air intakes.
- Minimize on-site equipment—repair and standby equipment to be kept in "clean" areas until required.
- Select and use of low porosity materials where feasible.

Facilities

- Construct the main waste processing handling and railcar loadout building floors with a built-in contamination barrier imbedded under the surface to control the

mitigation of contamination into the floor and underlying soil. Additionally, the floor will be constructed of a high-density concrete to reduce the porous nature of the material.

- Apply a nonstrippable coating to the floor joints to control effluents.
- Select material with a smooth surface for the construction of the process facilities.
- Include ease of decontamination as a factor in the design and selection of construction materials.
- Optimize use of walls or partial walls.
- Utilize effective flow logic to minimize spread of contamination and efficient D&D.
- Maximize "clean" access for personnel, deliveries, and storage.
- Maintain a clean area control room.

Haul Roads

- Install impermeable barriers under the dirty haul roads to prevent the migration of contamination into underlying soils.
- Install roadside berms to minimize the migration of contamination.
- Use effective flow logic for waste transportation, minimizing contaminated haul roads.

Operational Measures. During operations, standard operating procedures will provide direction for controlling the spread of contamination. Provisions in the operational phase will include:

Equipment

- Control of the potential for cross-contamination of excavation equipment by designating equipment for the exclusive use in specific areas and waste pits.
- Develop, implement, and maintain a program for routine cleaning of equipment.
- Use effective containment and control methods during equipment maintenance and repair.
- Implement and maintain an effective materials management system.

- Ongoing decontamination of nonessential equipment.

Facilities

- Perform routine general; housekeeping activities within the facility.
- Provide additional training for employees on ALARA methods, decontamination, and contamination control.
- Modify and/or improve equipment promptly for better control of contamination.
- Use effective contamination control methods during maintenance and repair, including containments and localized ventilation.

Haul Roads

- Minimize traffic on contaminated haul roads.
- Maintain a tire wash facility at the pit area exit.
- Utilize a paved haul road with berms to minimize the spread of contamination from the tire wash facility to the Material Handling Building.

7.0 DESIGN CRITERIA

7.1 Process

Process design activities include the development of the project conceptual flowsheets, heat and material balances, and initial process equipment sizing.

7.1.1 Codes, Standards, and Regulations

No specific codes or standards apply to the process design beyond the ARARs listed in Tables 3-1 and 3-2, as well as those listed in the mechanical and material handling sections.

7.1.2 Design Criteria

The design criteria for the process includes remedial activities such as excavation, stockpiling, waste preparations, dryer operation, air pollution control operation, treated material discharge, and loadout.

See Section 2.0 for process-related design criteria.

Process Parameters Table

Operation	Operating Times	Design Rates
Mechanical Excavation	8 hours/day, 5 days/week	100 tons/hour
Waste Preparation Facility Production	24 hours/day, 7 days/week max.	100 tons/hour
Dryer Feed	24 hours/day, 5-7 days/week	10-30 tons/hour
Dryer Product	24 hours/day, 5-7 days/week	9-24 tons/hour
Water to Off-Gas System	24 hours/day, 5-7 days/week	4-10 tons/hour
Loadout	2 shifts/day - 5 days/week	864 tons/day

7.2 Mechanical

Mechanical design activities include process equipment sizing, process equipment layout, and general mechanical utilities (i.e., heating, ventilation and/or air conditioning).

Development of specifications of the following equipment will be performed as part of the mechanical (and process) design activities:

- Dryer
- Conveyors
- Waste feeders
- Fans/blowers
- Stacks
- Tanks (storage and capture)
- Pumps
- Air compressors (plant and instrument air)
- Heat exchangers
- Precipitator filters (wet electrostatic)
- Scrubber/quench/venturi
- Mist eliminators
- HEPA/Carbon filters
- Cooling tower.

Equipment will be designed to ensure proper capacities, tie-in with utilities, weatherability and operational balance.

Codes, Standards and Regulations. Components and systems will be designed, tested, and installed in accordance with the following codes and standards, as applicable. Applicability will

be based upon standard industrial practice or as required by applicable codes or DOE orders. Where IT proposes using existing or pre-engineered components or systems that do not conform to the applicable codes or standards, IT will document the codes or standards that were applied along with a justification for differing from the requirements:

- Bearings
  - American Bearing Manufacturers Association, Inc. (ABMA)
- Gears
  - American Gear Manufacturers Association (AGMA)
- Motors
  - Institute of Electrical and Electronics Engineers (IEEE)
- Air Handling Equipment
  - Air Movement and Control Association (AMCA)
  - American National Standards Institute (ANSI)
  - American Society of Mechanical Engineers (ASME)
  - American Society for Testing and Materials (ASTM)
  - Sheet Metal and Air Conditioning Contractors national Association (SMACNA)
  - Energy Research and Development Administration (ERDA)
- Pipe, Fittings, Valves, and Accessories
  - ASME
  - ASTM
  - ANSI
  - Expansion Joint Manufacturer's Association (EJMA)
  - American Society for Nondestructive Testing (ASNT)
  - Manufacturers Standardization Society (MSS)
- Tanks and Pressure Vessels
  - ASME
  - American Petroleum Institute (API)
- Pumps
  - ASME
  - Hydraulic Institute Standards - 1995
  - ANSI (for water pumps with flow less than 400 gpm and discharge pressure less than 250 psig)
- Heat Exchangers
  - Tubular Exchanger Manufacturers Association (TEMA)

Design Criteria. All process equipment will be designed, constructed and installed in accordance with the appropriate codes, standards and regulations listed above. Equipment will be designed to incorporate personnel access for maintenance and a range of environmental conditions (temperature, wind, etc.).

Design of mechanical systems will consider the use of secondary containment to restrict movement of radioactive liquid waste that has the potential for human contact or reducing groundwater quality. Materials will be designed for corrosion resistance and ease of decontamination.

Mechanical design activities will also include the following facility equipment:

- HVAC
- Air cleaning (filtration)
- Process water
- Natural gas
- Fuel oil
- Plant air
- Instrument air
- Caustic
- Fire protection
- Plumbing.

Codes, Standards and Regulations. Components and systems will be designed, tested, and installed in accordance with the following codes and standards, as applicable. Applicability will be based upon standard industrial practice or as required by applicable codes of DOE orders. Where IT proposes using existing or pre-engineered components or systems that do not conform to the applicable codes or standards, IT will document the codes or standards that were applied along with a justification for differing from the requirements:

1) AMCA - Air Movement and Control Association
2) ANSI - American National Standards Institute
3) ASME - American Society of Mechanical Engineers
4) ASTM - American Society for Testing and Materials
5) SMACNA - Sheet Metal and Air Conditioning Contractors National Association
6) ERDA - Energy Research and Development Association
7) EJMA - Expansion Joint Manufacturer's Association
8) ASNT - American Society for Nondestructive Testing
9) MSS - Manufacturers Standardization Society
10) AWWA - American Water Works Association

11) NFPA - National Fire Protection Agency
12) AWS - American Welding Society
13) NFC - National Fuel Code
14) UL - Underwriters Laboratories
15) Ohio Basic Building Code
16) DOE Order 420.1 - Fire Protection for Relocatable Structures
17) DOE Standard 1088-95 - Fire Protection for Relocatable Structures.

Design Criteria

HVAC. HVAC systems shall be designed, tested and installed in accordance with applicable requirements of UL 778 - Motor Operated Water Pumps, NFPA 70 - National Electrical Code, ASTM, ASME, and ANSI.

Fire Detection/Suppression Systems. Fire detection/suppression systems will be designed, tested and installed according to the Ohio Basic Building code (latest edition), NFC, NFPA, DOE Order 420.1, and DOE Standard 1088-95, Fire Protection for Relocatable Structures.

Potable Water. Piping will be installed for locations requiring emergency eyewash stations, emergency showers or other potable water equipment.

Backflow preventers will be installed on process water lines at the tie-in point to the lines and wherever a potable water branch line is connected to the process water line.

Totalizers/meters, with isolation valves, will be installed on all tie-ins to natural gas lines and process water lines.

Fuel Storage/Dispensing Facilities and Fuel Oil/Diesel. Fuel storage tanks and lines will be designed, tested and installed according to the ASME, API, NFC, and ASTM requirements. Fuel storage/dispensing facilities must also meet applicable USEPA and NFPA requirements. The fuel loading system will be designed such that fuel vendors do not enter a contamination zone to deliver and off-load fuels.

7.2.3 Piping

Piping will be a mechanical design activity and will include the specification of pipes, fittings, valves, pipe supports/anchors and piping equipment and insulation.

Codes, Standards and Regulations. Components and systems will be designed, tested, and installed in accordance with the following codes and standards, as applicable. Applicability will be based upon standard industrial practice or as required by applicable codes of DOE orders. Where IT proposes using existing or pre-engineered components or systems that do not conform to the applicable codes or standards, IT will document the codes or standards that were applied along with a justification for differing from the requirements:

1) ASME - American Society of Mechanical Engineers
2) ASTM - American Society for Testing and Materials
3) ANSI - American National Standards Institute
4) EJMA - Expansion Joint Manufacturer's Association
5) ASNT - American Society for Nondestructive Testing
6) MSS - Manufacturers Standardization Society

Design Criteria. All piping will be designed to withstand dynamic conditions (wind, vibration, thermal extremes, flow, solids settling, corrosion) as well as static conditions (dead loads, test loads, etc.) in accordance with the proper codes and standards. Piping will be insulated for freeze protection where required.

7.2.4 Materials Handling

The Materials Handling will be a mechanical design activity and will include the design of the solids handling and waste processing equipment such as hoppers, conveyors, feeders and shredders.

Codes, Standards and Regulations. Components and systems will be designed, tested, and installed in accordance with the following codes and standards, as applicable. Applicability will be based upon standard industrial practice or as required by applicable codes of DOE orders. Where IT proposes using existing or pre-engineered components or systems that do not conform to the applicable codes or standards, IT will document the codes or standards that were applied along with a justification for differing from the requirements:

1) CEMA - Conveyor Equipment Manufacturers Association
2) OAC-3745-17-07(B)
3) OAC-3745-17-08(B)
4) ANSI - American National Standards Institute
5) AGMA - American Gear Manufacturers Association
6) ABMA - American Bearing Manufacturers Association

DOE 5480.2 - Safety Requirements for the Packaging and Transportation of Hazardous Materials

Design Criteria. All equipment and processes shall be designed to conform with the applicable codes, standards and regulations listed above.

7.3 Civil Design Basis

7.3.1 Geotechnical

Allowable Bearing Pressure. Based on the Geotechnical Boring and Analysis Report.

Frost Penetration. 36 inches.

Minimum Cover for Underground Piping. 42 inches.

Foundation Preparation.

- Class I Structural Fill - Beneath equipment, slabs, foundations, tanks, roads, parking areas, turnarounds, etc. Placed in uniform layers not exceeding 9 inches loose thickness. Each layer compacted to a dry density equal to 95 percent of the dry density obtained by compaction using ASTM D698.

- Class II Structural Fill - Around foundations, dikes, embankments, etc. Placed in uniform layers not exceeding 10 inches loose thickness. Each layer compacted to a dry density equal to 90 percent of the dry density obtained by compaction using ASTM D698.

- Class III Nonstructural Fill - Operations where no equipment is planned and grading is only required to reach specific elevations. Placed in uniform layers not exceeding 14 inches loose thickness. Each layer compacted uniformly by earth moving and spreading equipment.

Erosion Control

- Permanent or temporary measures will be implemented to prevent erosion (both wind and water) and control sediment during site preparation and construction.

- Erosion/sediment control measures will be maintained throughout the duration of the work. ODOT standards for control measures will be followed.

- Erosion control will be consistent with the Rainwater and Land Development, Ohio's Standards for Storm Water Management and Stream Protection, 1995 and the Fluor Daniel Fernald, Inc. Storm Water Pollution Prevention Plan (SWPPP).

- Erosion control features will be in place prior to any disturbance of the soil in the work area.

7.3.2 Access Roads and Fencing

Applicable Codes

- Ohio Department of Transportation (ODOT) specification and standards

- American Association of Highway and Transportation Official (AASHTO) Geometric Design of Highways and Streets.

Design Vehicle. WB-50 (55-foot semitrailer) for selected areas, P for selected areas, articulating dump trucks for waste pit area and haul road.

Design Speed. 15 mph.

Minimum Turning Radius. To suit the requirement of the expected vehicular traffic i.e., 50 feet for WB-50, 25 feet for P, and 20 feet for articulating dump trucks.

Width.
- 20 feet - two-way traffic
- 12 feet - one-way traffic.

Cross Slope. 1/4 inch per foot

Minimum Slope. 0.5 percent

Maximum Slope.
- Plant area 8 percent
- Pit area 18 percent

Surfacing

- Haul Roads - Bituminous concrete.
- Light Service Roads - crushed rock.
- Heavy Service Roads and Pit Access Roads - Bituminous or gravel.
- Sidewalks - Bituminous concrete.

Overhead Clearance. 18 feet over roads and 22 feet over railroad tracks.

Roads

- Emergency vehicle access roads will be provided so the perimeter of a portable structure is not more than 150 feet from the nearest roadway.

- All vehicle access roads will be a minimum of 20 feet clear in width. Roads of less than 30 feet in width will be posted as "Fire Lane No Parking".

- Structures within 10 feet of a roadway will be protected from impact.

Fencing

- Security fences will not restrict emergency access or exit.

- Radiological Control fencing is required around the entire perimeter of the work area.

- Radiological Control fencing will be constructed similar to snow fencing.

- Fencing will be installed around the entire perimeter of the process system including waste stockpiles.

- All fencing will be installed according to manufacturer's instructions.

- All fencing will be designed and manufactured in accordance with ASTM codes and standards.

- Snow fence will be orange for construction fencing or yellow for radiological boundaries and 4 feet high. Fencing material shall be as follows:

  Material: High density polyethylene
  Ultraviolet: Fully stabilized.

- Snow fence posts will be No. 5 rebar with orange plastic protective end caps spaced no more than 8 feet apart and electric tie-wraps to secure fencing.

7.3.3 Laying Out of Work

- The construction and the rights of way of work will be staked out and dimensions relating to the interconnection with existing features will be verified.

- Any inconsistencies in the dimensions of the existing site features or utility locations will be communicated to the Fluor Daniel Fernald, Inc. Technical Representative for review and approval prior to commencing work.

7.3.4 Identification and Relocation of Utilities

- IT will verify the location of all buried utilities, cable, pipes, and wire that may be located in the area of work and repair any underground utilities damaged by the subcontractor during execution of the work.

7.3.5 Site Clearing

- Clearing includes the removal and disposal of large debris that obtrude, encroach upon, or otherwise obstruct the work. Loose rocks, boulders, or rock piles present on the surface of the areas designated to be cleared shall be distributed and incorporated into the filling operation.
- All areas to be cleared will be clearly marked prior to beginning clearing.
- The remediation facility will be arranged to reduce the amount of clearing required.
- Work will be performed in accordance with ODOT standards.
- Topsoil will be removed and salvaged for reuse where possible.
- Material that cannot be reused will be disposed of as described in the Site Preparation Package (e.g., Sections 3.2 and 6.0).

7.3.6 Earthwork (Except Pit Excavation)

- Earthwork includes all grading, excavation, compaction, trenching, and filling, and will be performed to conform to ODOT standards.
- Trenching and open pit excavations will conform to Occupational Safety and Health Administration (OSHA) standards, 29 CFR Part 1926.
- Where feasible, permanent slopes shall be a minimum of 0.5 percent for impervious surfaces, 2 percent for vegetated surfaces, and a minimum of 3 horizontal to 1 vertical (3H:1V).
- Cut and fill will be planned to avoid, if possible, adding any new material to the work area.
- IT will minimize the creation of additional wastes and excessive earthwork.
- Backfill material may be obtained from an off-site borrow area.
- Any excess or temporarily unused materials will be stockpiled as described in the Site Preparation Package (e.g., Section 3.2).

7.3.7 Dust Suppression

- All excavation, embankments, haul roads, plant sites, waste disposal areas, borrow areas, and all other areas within the work area will be maintained so as to minimize the creation and dispersion of dust in accordance with the OAC 3745-17-01 (B) and OAC 3745-17-08 (B).

- In general, water or other substances used for dust suppression will not increase the concentration of contamination in the area where the water is being applied. Storm water from the storm water management pond (located in the northern half of the process area) may be used to suppress dust during site preparation and construction activities.

- Trucks used for transporting excavated or borrow material will be equipped with covers or some other means to control dust from the cargo. If dust levels are significant, per applicable requirements of the OAC, the covers or other acceptable method shall be implemented to prevent the generation of dust.

- Dust suppressant will be applied in accordance with the procedures for dust control described in the Pre-Operational Environmental Control Plan.

7.4 Structural Design Basis

7.4.1 Codes, Standards, and Regulations

Components and systems will be designed, tested, and installed in accordance with the following codes and standards, as applicable. Applicability will be based upon standard industrial practice or as required by applicable codes of DOE orders. Where IT proposes using existing or pre-engineered components or systems that do not conform to the applicable codes or standards, IT will document the codes or standards that were applied along with a justification for differing from the requirements:

- American Institute of Steel Construction (AISC) - Specification for the Design, Fabrication, and Erection of Structural Steel for Buildings

- AISC - Manual of Steel Construction, Latest Edition

- AISC - Code of Standard Practice for Steel Buildings

- AISC - Specification for Structural Connections using ASTM A325 Bolts

- American Concrete Institute (ACI) 301 - Specifications for Structural Concrete for Buildings

- ACI 318 - Building Code Requirements for Reinforced Concrete, latest edition
- ACI 347 - Recommended Practice for Concrete Formwork
- American Society of Civil Engineers (ASCE), 7-93, "Minimum Design Loads for Buildings and Other Structures"
- American Society for Testing and Materials (ASTM) - Applicable "Standards"
- Concrete Reinforcing Steel Institute (CRSI) - Applicable Codes
- ACI - Applicable "Recommended Practice"
- American Welding Society (AWS) 1.1D - Structural Welding Code
- Occupational Safety and Health Administration (OSHA), CFR29
- Ohio Basic Building Code (OBBC), latest edition
- Steel Deck Institute (SDI) Publications
- Steel Joist Institute (SJI) Publications
- All applicable local and state codes
- Specific codes or specifications delineated on drawings, requisitions, etc.

7.4.2 Design Load

- Dead load - Actual operating weight of equipment, materials and support structures.
- Live loads - Largest loads produced in accordance with their intended use and not less than the minimum live loads presented below.
- Minimum Design Loads

- Ground floor:	125 psf
- Roof:	20 psf
- Snow Loads:	25 psf Exposure factor 0.7 Importance factor 1.00
- Platforms and walkways:	75 psf

- Windloads: 80 mph basic wind speed
  Exposure "C"
  Importance Factor 1.00

- Wind Load - The following combinations of loading conditions shall be considered in the design of enclosed or open-sided structures, wherever applicable:

  - Dead load + live load

  - Dead load + live load + wind/earthquake load

  - Dead load + wind/earthquake load

  - The design stresses for members subjected to wind (or earthquake) combined with any other loads shall be increased not more than 33-1/3 percent provided that the members thus required are not less than those necessary for the combination of dead load + live load + impact (if any) computed without the 33-1/3 percent.

- Dynamic loads - Careful attention shall be given to any loading condition or equipment which includes vibrating or reaction loads due to movement of fluids or solids in pipe lines and equipment, reciprocating engines, agitators, etc.

- Piping loads - An additional live load of 15 psf, uniformly distributed, shall be added to the design load at each floor.

- Impact loads - An additional increase must be applied to each member which carries the load. The safe operating load must be indicated on the design drawings and on the crane, davits, or trolley beams.

- Seismic Design and Evaluation will be performed in accordance with OBBC Section 1612.0.

7.4.3 Structural Materials

- Structural steel - ASTM designation A-36. Design shall conform to AISC specification.

- Bolts and nuts - AISC specification A325 bearing type, thread in shear plane.

- Floor grating - Rectangular bar type.

- Reinforced concrete - Footings - 3,000 psi (min.); Wall, Piers, and Slabs - 4,000 psi.

- Reinforcing steel - ASTM specification A-615 (Grade 60).

- Concrete finish - Interior Slabs - troweled finish three passes; Exterior Slabs - broomed finish or as noted on drawings.

- Grout - Nonshrink type grout to be specified suitable for the respective applications.

- Framing members, columns, and connections - Total load (live load and dead load) over the total surface of the pipe rack, for 8-inch pipe size or larger to be the actual weight of the pipes and 30 psf for pipes smaller than 8-inch size. Load for electrical areas will be 30 psf.

7.5 Architectural Design Basis

7.5.1 Codes, Standards, and Regulations

Components and systems will be designed, tested, and installed in accordance with the following codes and standards, as applicable. Applicability will be based upon standard industrial practice or as required by applicable codes of DOE orders. Where IT proposes using existing or pre-engineered components or systems that do not conform to the applicable codes or standards, IT will document the codes or standards that were applied along with a justification for differing from the requirements:

- OBBC 1995
- UBC 1997
- NFPA 101, Life Safety Code
- NFPA 13, Standard for Installation of Sprinkler Systems
- MBMA - Recommended Design Practice Manual
- 40 CFR 101-19.6, "Uniform Federal Accessibility Standards"
- Performance Criteria for Roofing Membranes Using Polymer Modified Bituminous Products
- Recommended Work Procedures for Resilient Floor Covering
- Architectural Painting and Wall Covering Manual.
- AISC - applicable codes
- ACI - applicable codes
- ASTM - applicable codes
- ANSI - applicable codes

7.5.2 Pre-Engineered Buildings

7.5.2.1 Material Handling Building

Structure. The Material Handling Building will consist of a pre-engineered, rigid-frame steel structure measuring 170 feet in width and 360 feet in length with an approximate eave height of 23 feet. The southern end of the building will abut against the northern end of the Railcar Loadout Building. This end will be fully enclosed except for the entrance into the building. The western side will have two door openings where material will enter the building. The Dryer Enclosure will abut on the western side of the building south of the door openings. The building will be designed with side wall openings and full-length ridge-roof ventilators.

Flooring. The floor will consist of sloped reinforced concrete slabs designed to withstand the anticipated loads. A series of trench drains and sumps will be provided to collect water which may permeate from the stored material and wash water from regularly scheduled housekeeping activities.

Mixing Pits. Trucks will turn-around in the area provided and back to the door openings, raise their beds, and deposit the contents into one of two mixing pits based on the CDF WAC. The outside area will ramp up to the facility to create a 6 foot drop into the building. The mixing pits will be 30 feet by 60 feet and 6 feet deep, 3 feet below and 3 feet above the floor. The two pits will be separated by a concrete wall and will have sumps in them for draining of moisture. The waste material will then be transferred to one of five different bins.

Storage Area. The storage of material will occur along the eastern side of the building. A series of six storage bins will be partitioned using reinforced concrete and steel crib walls and precast concrete traffic (Jersey) barriers. The outer bin walls will measure fourteen feet in height and the lower seven feet will consist of reinforced concrete to sustain the anticipated impact loads due to loading and unloading. The upper seven feet will consist of steel plating stiffened with angles or channels. The bins will receive material based on the CDF WAC. One of the bins will occasionally be used to store material conveyed into the building from OU1. The material will then be transported to the material processing area.

7.5.2.2 Railcar Loadout Building

Structure. The Railcar Loadout Building will consist of a pre-engineered, rigid-frame steel structure measuring 120 feet in width and 230 feet in length with an approximate eave height of 22 feet. One end of the building will abut against the southern end of the Material Handling Building. This end will be fully enclosed except for the entrance into the building (through the railcar decontamination area) located at the northeast corner. The eastern side of the building will have siding up to a level of sixteen feet. The southern end of the building will abut the northern end of the Railcar Preparation and Liner Storage Building. This end will also be fully enclosed. The western side of this building will have siding up to a level of sixteen feet. The upper seven feet of the east and west walls will remain open and a continuous ridge vent will be provided so that adequate ventilation is achieved while preventing wind dispersion of dried materials.

Flooring. The floor will consist of a reinforced concrete slab designed to withstand the anticipated loads. Curbs and sumps will be provided to contain, collect, and remove wash water from regularly scheduled housekeeping activities.

During the final design phase, various coatings will be evaluated for both the structure and floor slab to facilitate cleaning and decontamination activities.

Storage Area. The storage of dried materials and debris will occur along the western side of the building. A series of six storage bins will be sized to provide one-day storage (approximately 600 tons). These bins will be constructed of steel soldier beams with reinforced concrete and steel crib walls. The bin walls will measure approximately 14-feet in height with the lower portion of reinforced concrete to sustain the anticipated impact loads due to loading and unloading. The upper section will consist of steel plating stiffened with angles or channels.

Decontamination and Lid Removal Area. The railcar decontamination and lid removal area will be located in the northeast corner of this facility. This area will be partitioned off from the remaining portions of the building and will be equipped with a 4-ton (minimum) bridge crane for lid removal and replacement, elevated walkways and piping to facilitate lid removal and decontamination procedures, and collection sumps and pump for collecting and removing wash water.

Loadout and Weighing Area. The loadout and weighing area will be located in the central portion of the building and will make use of the existing loadout slab and scale installed by FDF in 1997. A water mist system will also be installed to provided for dust suppression. Existing sumps will be used to collect any over spray from the mister and wash water from clean up of spillage during routine housekeeping activities.

7.5.2.3 Railcar Preparation and Liner Storage Building

Structure. This preparation and storage building will consist of a pre-engineered, rigid-frame steel structure 60 feet in width and 120 feet in length with an approximate eave height of 22 feet. The northern end of the building will abut against the southern end of the Railcar Loadout Building. This building will be fully enclosed with entrances into the building for railcars, delivery of materials, and personnel access.

Flooring. The floor will consist of a reinforced concrete slab designed to withstand the anticipated loads. Curbs and sumps will be provided to contain, collect, and remove wash water from regularly scheduled housekeeping activities.

Liner Area. The liner installation area will be located in the northern end of this building as will an area to store and repair lids, if necessary. Platforms will be provided to assist with the installation of the railcar liners and lid removal and replacement. A 4-ton monorail crane will also be provided to remove and replace lids which require repair and to also act as a backup in the event that the crane located in the lid removal area is out of service.

Storage Area. The storage area will be located in the southern portion of this building.

7.5.2.4 Railcar Survey Area

The Railcar Survey Area will be located north of the railcar decontamination area and will abut the southeast corner of the Material Handling Building. This structure will consist only of a canopy under which radiological surveys may be conducted prior to release for transport.

7.5.2.5 Dryer Enclosure

The Dryer Enclosure will consist of a pre-engineered, rigid-frame steel structure measuring 150 feet long and 110 feet wide with open sides. The eave height will be based on the final design. The east side of the dryer building will abut the Material Handling Building.

000142

7.5.2.6 Maintenance Building

The Maintenance Building will consist of a pre-engineered, rigid-frame steel structure measuring 80 feet long by 40 feet wide with an approximate eave height of 20 feet. It will be located to the west of the dryer building and adjacent to the equipment decontamination pad. Both the haul roads and service roads will provide access to the building.

7.5.2.7 Warehouse

The warehouse facility will consist of a pre-engineered, rigid-frame steel structure measuring 60 feet in length and 40 feet in width with an approximate eave height of 20 feet. This facility will have an office and a mezzanine storage level. It will be located to the west of the railcar liner storage building. It will be a fully enclosed building.

7.5.2.8 Laboratory

The laboratory building will consist of a pre-engineered, rigid-frame steel structure measuring 80 feet long and 50 feet wide. The eave height will be approximately 20 feet. The laboratory will be at the south end of the project area.

7.5.2.9 Water Treatment System

The size of the WTS will measure 80 feet square.

7.5.3 Portable Structures

Portable structures shall consist of prefabricated trailers and will be utilized for the following facilities:

- Superintendent's office trailer
- Laundry facility
- Respirator wash facility
- Changeout facility
- Break room
- Administrative office facility.

Portable structures will comply with the following requirements:

- Each portable structure will have support and anchoring systems that will resist overturning and lateral movement of the unit. Support and anchoring equipment shall be in accordance with manufacturer's specifications or an anchoring system designed and stamped by a registered professional engineer.

000143

- Portable structures will be identified by a unique, alphanumeric marking on each side of the unit consisting of a painted 14-inch x 14-inch orange square, bordered by a 1-inch black border, with identification marking in black characters, ½-inch or wider and at least 4-inches high within the orange square.

- Each portable structure will have the area under the floor enclosed to prevent the accumulation of windblown debris and to prevent the space from being used for storage. Semi-trailers used exclusively for storage will require orange snow fence or similar skirting to prevent accumulation of debris. The skirting will be of noncombustible material and without openings.

- Stairs, ramps and platforms will be constructed of weather-resistant lumber or other weather-resistant materials. All stairs will comply with OSHA Subparts D & E and NFPA 101.

- Plumbing and sanitation facilities will meet state and local code requirements.

- All electrical conductors and equipment will be in accordance with the latest edition of NFPA 70, "National Electric Code".

- Heating and cooling equipment will be UL listed or labeled, and installed in accordance with its listed design and appropriate standards. Only electric or steam units will be installed.

- All normally occupied portable structures will have a minimum of two exits remote from each other unless the maximum occupancy is ten persons or less and provided the travel distance to the outside shall not exceed 75 feet.

- The minimum width of any corridor, or main aisle-way exit passageway, or primary aisle-way will be 44 inches. The minimum width of any aisle serving to gain access to a corridor or exit passageway shall be 36 inches in the clear. No door opening in the means of egress shall be less than 32 inches in clear width.

- Doors will be arranged to be readily opened from the egress side whenever the structure is occupied.

- Exits will be marked by an approved sign readily visible from any direction of exit access. An exception is the main exterior doors that are obvious and clearly identified as exits.

- All complexes will be located so that fire fighting equipment is not blocked from access to adjacent structures.

- Portable structures will not be located within 50 feet of a fire hydrant. All exterior portions of the structure will be within 300 feet of a hydrant in a hydrated area.

- Portable structures will not be located over control valves, manholes serving underground utility systems, gas mains, water mains, or utility corridors or beneath vital power lines/utilities or any power lines over 600 volts.

- NFPA 80A will be used to determine minimum separation distances between fire areas. NFPA 80A will be used to determine the required separation distances between a portable structure and a permanent building.

- Fire alarms, Emergency Message System, and evacuation alarms will be installed as required by 29 CFR 110.155.

- Portable structures will meet the requirements of the Ohio Basic Building Code (OBBC) or DOE STD 1088-95 "Fire Protection for Relocatable Structures."

7.6 Electrical

7.6.1 Power

Electrical design activities will include all electrical power distribution, connections, backup power supply, grounding systems, facility lighting, and instrumentation systems.

Codes, Standards and Regulations. Components and systems will be designed, tested, and installed in accordance with the following codes and standards, as applicable. Applicability will be based upon standard industrial practice or as required by applicable codes of DOE orders. Where IT proposes using existing or pre-engineered components or systems that do not conform to the applicable codes or standards, IT will document the codes or standards that were applied along with a justification for differing from the requirements:

1) NEC - National Electric Code
2) UL - Underwriters Laboratories
3) ANSI - American National Standards Institute
4) NEMA - National Electrical Manufacturing Association
5) NETA - International Electrical Testing Association
6) ISA - International Society for Measurement and Control.

Design Criteria. Electrical systems will be designed and installed in accordance with the appropriate codes, standards and regulations listed above.

There are no specific design criteria for the electrical and instrumentation systems, other than those imposed by the manufacturers standards. Electrical power will be supplied by a tie-in to the local 13.2 kV electrical utility main. In the event of power loss from the main electrical

supply, backup power will be supplied as required through the use of diesel generators. Backup power requirements and utilization will be evaluated during design.

Adequate electrical power shall be provided for the operation of all electrical components, emissions monitoring equipment, and all items requiring electrical power.

Motors over 100 Kw will have efficiency of 90 percent or higher.

Power factor compensating capacitors will be installed to maintain power factor above 90 percent.

High intensity facility lighting will be installed in the process areas, outdoor areas, railcar loadout areas, and exhaust stacks. Fluorescent lighting will be installed in offices, electrical rooms, laboratory, change out facility and control room. Emergency lighting will be supplied by battery backup units.

The fire alarm and evacuation systems for the OU1 facility will be connected to the central command center via existing facilities as directed by site fire protection.

Totalizers/meters will be installed to monitor power consumption demand and power factor. Power factor will be maintained above 90 percent.

7.6.2 Instrumentation and Controls

Instrumentation design activities will include the process control systems and instrument equipment.

Codes, Standards and Regulations. Components and systems will be designed, tested, and installed in accordance with the following codes and standards, as applicable. Applicability will be based upon standard industrial practice or as required by applicable codes of DOE orders. Where IT proposes using existing or pre-engineered components or systems that do not conform to the applicable codes or standards, IT will document the codes or standards that were applied along with a justification for differing from the requirements:

1) NEC - National Electric Code
2) UL - Underwriters Laboratories

3) ANSI - American National Standards Institute
4) NEMA - National Electrical Manufacturing Association
5) NETA - International Electrical Testing Association
6) ISA - International Society for Measurement and Control.

Design Criteria. Instrumentation will be designed in conformance with applicable standards and codes. Instrumentation specific to purchased equipment will be designed to manufacturers standards and design specifications.

Design information will be required from the vendor for all purchased equipment. A dedicated control system will be designed for interfacing with any process package systems or process operations.

TABLES

TABLE 3-1a. LOCATION-SPECIFIC ARARS
(APPLICABLE REQUIREMENTS; RELEVANT AND APPROPRIATE REQUIREMENTS)

Category	Applicable Requirements	Requirements Assessment	Compliance Strategy	Index to Design
Wildlife Protection	16 USC 1531 et. seq., and 50 CFR 17.21, 17.31, 17.61, 17.71, 17.94, 50 CFR 402, and Endangered Species Act All federal agencies must insure that any action authorized, funded or carried out by them is not likely to jeopardize the continued existence of any listed species or result in the destruction or adverse modification of the constituent elements essential to the conservation of a listed species within a defined critical habitat. Additional requirements apply if it is determined that a proposed activity could adversely affect these species or their habitat.	In 1994, updated surveys at the FEMP determined the presence of summer habitat for the federally-listed endangered Indiana bat along Paddys Run including areas adjacent to OU1. This area is not critical habitat. Consultation with U.S. Fish and Wildlife Service will determine restorative measures that may need to be taken during and after remedial actions. If any endangered or threatened species are encountered, the additional requirements of the referenced regulation would be applicable. Efforts will be made during remediation to preserve riparian vegetation, habitat for the Indiana bat, to the maximum practicable extent. (NOTE: Mitigatory requirements will be determined and implemented by others on a site-wide basis.)	This area is not critical habitat. If any endangered/threatened species are encountered, the requirement of the referenced regulations will be applied.	N/A
Wildlife Protection	ORC 1531.25, 1518.02, and 1501: 18-1, Ohio Endangered Species Regulations No person shall take or possess any native species of wild animal, or any eggs, or offspring thereof, that is endangered with state-wide extinction.	Updated surveys in 1993 and 1994 found state-listed threatened Sloan's crayfish populations in sections of Paddys Run, including sections directly adjacent to OU1 area. Wastewater controls will be designed to minimize negative impacts on Paddys Run, to the maximum practicable extent during and after remedial activities. Process wastewater will not be discharged to Paddys Run from any OU1 operation. Storm water flows from the new facilities area, for storms greater than the 25 year, 24 hour will discharge to Paddys Run. (NOTE: Mitigatory requirements will be determined and implemented by others on a site-wide basis.)	Process and pit excavation wastewater will not be discharged directly to Paddys Run. Clean water from roofs and storm water flows from the new facilities area for storms greater than the 25-yr, 24-hr storm will be discharged to Paddys Run under the NPDES permit. Discharges of stormwater from the Storm Water Management (SWM) Pond will be included in the NPDES permit modification.	Description of the Operation & Process Sections 2.8, 2.9, and 4.0; Design Criteria and Assumptions Sections 2.8 and 3.2; Excavation Plan Section 6.0; Pre-Operational Environmental Control Plan Sections 2.3, 3.3, and 6.0; Operation and Maintenance Plan for Existing Facilities Section 4.5.

TABLE 3-1a. LOCATION-SPECIFIC ARARS (Continued)

Category	Applicable Requirements	Requirements Assessment	Compliance Strategy	Index to Design
Wildlife Protection	16 USC 66 *et seq.*, Fish and Wildlife Coordination Act Requires consultation with other state agencies for any activities which might affect any body of water for the purpose of conserving fish and wildlife resources.	Remedial activities at OU1 may have the potential to affect wildlife and fish in Paddys Run. Wastewater controls will be designed to minimize negative impacts on Paddys Run, to the maximum practicable extent during and after remedial activities. Process wastewater will not be discharged to Paddys Run from any OU1 operation. Stormwater flows from the new facilities area, for storms greater than the 25 year, 24 hour will discharge to Paddys Run.	Process wastewater will not be discharged directly to Paddys Run. Clean water from roofs and stormwater flows from the new facilities area, for storms greater than the 25-yr 24-hr storms, will be discharged to Paddys Run under the NPDES permit. Discharges of stormwater from the Storm Water Management (SWM) Pond will be included in the NPDES permit modification.	Description of the Operation & Process Sections 2.8, 2.9, and 4.0; Design Criteria and Assumptions Sections 2.8 and 3.2; Excavation Plan Section 6.0; Pre-Operational Environmental Control Plan Sections 2.3, 3.3, and 6.0; Operation and Maintenance Plan for Existing Facilities Section 4.5.
Historic Preservation	16 USC 469, Archaeological and Historic Preservation Act Requires preservation of artifacts and data associated with archaeological finds.	Historical data and artifacts are not expected to be discovered or destroyed during remedial activities at OU1. Nevertheless, the requirements of the law are applicable.	Discovery/destruction of historical data and artifacts is not anticipated during remedial activities at OU1. Should they be encountered, the affected portion of the work area will be managed in compliance with the FEMP Cultural Resource Policy.	N/A
Historic Preservation	16 USC 470 *et seq.*, National Historic Preservation Act DOE must take into account the effect of an undertaking on historic properties and accord the Advisory Council on Historic Preservation a reasonable opportunity to comment. Historic properties are described as any prehistoric or historic district, building, site, structure, or object included in, or eligible for inclusion in the National Register of Historic Places. This term includes artifacts, records, and remains that are related to and located within such properties. Historic properties that are substantially altered or demolished must be recorded for future use and reference.	Areas adjacent to OU1 boundaries will be surveyed pursuant to the programmatic agreement by the DOE, the Advisory Council on Historic Preservation, and the Ohio Historic Preservation Office. The programmatic agreement will stipulates what actions are required for compliance with the National Historic Preservation Act. Historic sites listed or eligible for listing in the *National Register of Historic Places* are not present within OU1 nor is it expected that any will be. Nevertheless, the requirements of the law are applicable.	Historic sites listed/eligible for listing are not present within OU1, nor are any anticipated. Should they be encountered, the affected portion of the work area will be managed in compliance with the FEMP Cultural Resource Policy.	N/A

000150

1321

TABLE 3-1a. LOCATION-SPECIFIC ARARS (Continued)

Category	Applicable Requirements	Requirements Assessment	Compliance Strategy	Index to Design
Historic Preservation	16 USC 470 (aa) - 470 (11), Archaeological Resources Protection Act Requires permit for removal of any archaeological resources from federal lands.	OU1 is located on federal land. Although archeological resources are not expected on the site, the requirements of the law remain applicable to OU1 remedial activities.	Due to significant recent filling and earthwork at OU1, archeological resources are not anticipated on the site. Should they be encountered, the affected portion of the work area will be managed in compliance with the FEMP Cultural Resource Policy.	N/A
Historic Preservation	16 USC 431-433 and USC 461-467, Antiquities Act and Historic Sites Act. Requires that no person may appropriate, excavate, injure or destroy any historical or prehistoric ruin or monument or any object or antiquity situated or controlled by the U.S. Government without an applicable permit. Also requires the identification and preservation of cultural resources on federal lands.	Although OU1 is not expected to contain cultural resources or natural landmarks of significance, it is located on federal land and the law is applicable should any cultural resources be discovered during remedial actions on site.	OU1 is not expected to contain cultural resources or natural landmarks of significance. Should they be encountered, the affected portion of the work area will be managed in compliance with the FEMP Cultural Resource Policy.	N/A
Historic Preservation	25 USC 3001, Native American Graves Protection and Repatriation Act Provides for return of human remains and cultural objects from Native American graves to affiliated tribes.	Although OU1 does not contain known American Indian burial grounds, this law would apply should graves and human remains be discovered during excavation of the waste pits.	OU1 does not contain known American Indian burial grounds. Should they be encountered, the affected portion of the work area will be managed in compliance with the FEMP Cultural Resource Policy.	N/A
Historic Preservation	42 USC 1996, American Indian Religious Freedom Act Provides for tribal access by native peoples to grave sites and sites of cultural, symbolic, or religious significance.	Although no sites of this nature have been identified at OU1, the law is applicable to federal lands and activities.	Grave sites and sites of cultural, symbolic or religious significance are not known on the OU1 site. Should they be encountered, the affected portion of the work area will be managed in compliance with the FEMP Cultural Resource Policy.	N/A
Historic Preservation	Executive Order 11593, Protection and Enhancement of Cultural Environment. Requires an inventory of site for potential historic places for eligibility in the *National Register of Historic Places*.	The requirement is applicable to activities at OU1. An updated inventory will be completed prior to remedial action. It is not expected that any sites of this nature will be identified at OU1.	No potential historic sites have been identified on the OU1 site. Should they be encountered, the affected portion of the work area will be managed in compliance with the FEMP Cultural Resource Policy.	N/A

000151

1321

TABLE 3-1a. LOCATION-SPECIFIC ARARS (Continued)

Category	Applicable Requirements	Requirements Assessment	Compliance Strategy	Index to Design
Siting	<u>10 CFR 1022, Protection of Wetlands and Floodplain Management</u> 10 CFR 1022 contains the DOE regulation implementing Executive Orders 11990 and 11988. Executive Order 11990 requires that Federal agencies take action to avoid adversely impacting wetlands wherever possible, to minimize wetlands destruction, to preserve the values of wetlands, and to prescribe procedures to implement the policies and procedures of the Executive Order. Executive Order 11988 requires Federal agencies undertaking actions within a floodplain to evaluate the potential the action has for adverse impact on the floodplain. If it is determined that adverse impacts could occur, the effects of the action must be minimized to the extent practical.	Approximately 36 acres of jurisdictional wetlands were identified on the site as the result of the 1993 wetland delineation, 4.96 acres of which were identified within OU1. It has been determined that OU1 remediation efforts will result in an unavoidable impact to the entire 4.96 acres. Impacts to wetlands outside of the subcontractor's work area will be minimized during remedial activities by avoiding these areas to the maximum extent possible. OU1 is in the immediate vicinity of the Paddys Run Floodplain. Remediation activities will be undertaken while minimizing impacts to the floodplain primarily through minimizing activities within the floodplain which would cause substantial adverse changes to the floodplain. (NOTE: Mitigatory requirements relative to wetlands impacts and the final topography (and its impact on the floodplain) will be assessed by others on a site-wide basis. The final grading plan will be reflective of these efforts.)	Mitigatory strategies relative to wetland impacts and the final topography (and its impact on the Paddys Run floodplain) will be assessed by FDF on a sitewide basis. The final grading plan will be reflective of the results of this assessment.	Final site grading plan

TABLE 3-1a. LOCATION-SPECIFIC ARARS (Continued)

Category	Applicable Requirements	Requirements Assessment	Compliance Strategy	Index to Design
Construction	33 CFR 330, Nationwide Permit Program (33 CFR 323 and OAC 3745-32) The Army Corps of Engineers authorizes discharges of dredge or fill material into wetlands and waters of the United States under its Nationwide Permit or Individual Permit Programs. Section 401 State Water Quality Certification is also required for these types of discharges. Approximately 4.96 acres of jurisdictional wetlands will be impacted as a result of the OU1 Remedial Action and will be subjected to the substantive requirements of these regulations. **See Table 3-2d for a detailed discussion relative to the substantive requirements of Nationwide Permit 26.**	Discharges of dredged and fill material associated with the OU1 remedial action will be conducted in accordance with the substantive requirements of Nationwide Permit 26 - Headwaters and Isolated Waters Discharges and its corresponding Section 401 State Water Quality Certification. **(NOTE:** Wetland mitigatory requirements for OU1 impacts will be addressed by others under a site-wide wetland mitigation plan.) **See Table 3-2d for additional details.**	Compliance strategy is addressed in substantive permitting requirements. (see Table 3-2)	See Table 3-2

000153

1321

TABLE 3-1b. CHEMICAL-SPECIFIC ARARS
(APPLICABLE REQUIREMENTS; RELEVANT AND APPROPRIATE REQUIREMENTS; TBCs)

Category	Applicable Requirements	Requirements Assessment	Compliance Strategy	Index to Design
Surface Water Discharges	<u>OAC 3745-1 Ohio Water Quality Standards</u> It is the purpose of these Water Quality Standards to establish minimum water quality requirements for all surface waters of the State, thereby protecting public health and welfare; and to enhance, improve, and maintain water quality as provided under the laws of the State of Ohio, and ORC 6111.041, the Federal Clean Water Act, 33 U.S.C. Section 1251 *et seq.* Whenever two or more use designations apply to the same surface water, the more stringent criteria of each use designation will apply.	OU1 remediation activities will not result in the direct discharge of wastewater to a water of the State. Wastewater generated by OU1 remediation activities will be pretreated and discharged to the existing FEMP wastewater treatment system where it will be combined with other site wastewater for treatment. Treated wastewaters will be discharged in accordance with the requirements of the FEMP NPDES permit and applicable numeric and narrative water quality standards promulgated in OAC 3745-1.	Process and pit excavation wastewater will not be directly discharged to a water of the state. These wastewaters will be discharged to the existing FEMP wastewater treatment system, in compliance with the BSL WAC, where they will be combined with other site wastewater for treatment. Treated wastewater will be discharged in accordance with the requirements of the FEMP NPDES permit and applicable numeric and narrative quality standards promulgated in OAC 3745-1. Clean water from roofs and storm water flows from the new facilities area for storms greater than the 25-yr, 24-hr storm will be discharged to Paddys Run under the NPDES permit. Discharges of stormwater from the Storm Water Management (SWM) Pond will be included in the NPDES permit modification.	Description of the Operation & Process Sections 2.8, 2.9, 3.6, and 4.0; Design Criteria and Assumptions Section 2.8; Excavation Plan Section 6.0; Pre-Operational Environmental Control Plan Sections 2.3, 3.3, and 6.0; see also Table 3-2.

TABLE 3-1b. CHEMICAL-SPECIFIC ARARS (Continued)

Category	Applicable Requirements	Requirements Assessment	Compliance Strategy	Index to Design
Surface Water Discharges	<u>OAC 3745-01-04 Criteria Applicable to All Waters</u> The following general water quality criteria shall apply to all surface waters of the State including mixing zones. To every extent practical and possible as determined by the director, these waters shall be: (A) Free from suspended solids or other substances that enter the waters as a result of human activity and that will settle to form putrescent or otherwise objectionable sludge deposits, or that will adversely affect aquatic life; (B) Free from floating debris, oil, scum and other floating materials entering the waters as a result of human activity in amounts sufficient to be unsightly or cause degradation; (C) Free from materials entering the waters as a result of human activity producing color, odor or other conditions in such a degree as to create a nuisance; (D) Free from substances entering the waters as a result of human activity in concentrations that are toxic or harmful to human, animal or aquatic life and/or are rapidly lethal in the mixing zone; (E) Free from nutrients entering the waters as a result of human activity in concentrations that create nuisance growths of aquatic weeds and algae.	OU1 remediation activities will not result in the direct discharge of wastewater to a water of the State. Wastewater generated by OU1 remediation activities will be pretreated and discharged to the existing FEMP wastewater treatment system where it will be combined with other site wastewaters for treatment. Treated wastewaters will be discharged in accordance with the requirements of the FEMP NPDES permit and applicable numeric and narrative water quality standards promulgated in OAC 3745-1.	Process and pit excavation wastewater will not be directly discharged to a water of the state. These wastewaters will be discharged to the existing FEMP wastewater treatment system, in compliance with the BSL WAC, where they will be combined with other site wastewater for treatment. Treated wastewater will be discharged in accordance with the requirements of the FEMP NPDES permit and applicable numeric and narrative quality standards promulgated in OAC 3745-1. Clean water from roofs and storm water flows from the new facilities area for storms greater than the 25-yr, 24-hr storm will be discharged to Paddys Run under the NPDES permit. Discharges of stormwater from the Storm Water Management (SWM) Pond will be included in the NPDES permit modification.	Description of the Operation & Process Sections 2.8, 2.9, 3.6, and 4.0; Design Criteria and Assumptions Section 2.8; Excavation Plan Section 6.0; Pre-Operational Environmental Control Plan Sections 2.3, 3.3, and 6.0; see also Table 3-2.

000155

1321

TABLE 3-1b. CHEMICAL-SPECIFIC ARARS (Continued)

Category	Applicable Requirements	Requirements Assessment	Compliance Strategy	Index to Design
Surface Water Discharges	OAC 3745-1-07, Table 7-1 Numerical and Narrative Criteria for Aquatic Life Habitat and Water Supply Use Designation Surface Waters in the State of Ohio must comply with the maximum concentrations of each contaminant of concern listed in Table I-5 and I-6 in Attachment I for inside and outside the mixing zones of the receiving water to protect warm water aquatic habitats.	OU1 remediation activities will not result in the direct discharge of wastewater to a water of the State. Wastewater generated by OU1 remediation activities will be pretreated and discharged to the existing FEMP wastewater treatment system where it will be combined with other site wastewaters for treatment. Treated wastewaters will be discharged in accordance with the requirements of the FEMP NPDES permit and applicable numeric and narrative water quality standards promulgated in OAC 3745-1.	Process and pit excavation wastewater will not be directly discharged to a water of the state. These wastewaters will be discharged to the existing FEMP wastewater treatment system, in compliance with the BSL WAC, where they will be combined with other site wastewater for treatment. Treated wastewater will be discharged in accordance with the requirements of the FEMP NPDES permit and applicable numeric and narrative quality standards promulgated in OAC 3745-1. Clean water from roofs and storm water flows from the new facilities area for storms greater than the 25-yr, 24-hr storm will be discharged to Paddys Run under the NPDES permit. Discharges of stormwater from the Storm Water Management (SWM) Pond will be included in the NPDES permit modification.	Description of the Operation & Process Sections 2.8, 2.9, 3.6, and 4.0; Design Criteria and Assumptions Section 2.8; Excavation Plan Section 6.0; Pre-Operational Environmental Control Plan Sections 2.3, 3.3, and 6.0; see also Table 3-2.

000156

1321

TABLE 3-1b. CHEMICAL-SPECIFIC ARARS (Continued)

Category	Applicable Requirements	Requirements Assessment	Compliance Strategy	Index to Design
Surface Water Discharges	OAC 3745-1-07, Table 7-10, Outside Mixing Zone Maximum Criteria for Water Hardness Dependent Parameters in Warm Water Habitats Table I-7 in Attachment I contains the numerical limits on cadmium, copper, chromium, lead, and silver.	OU1 remediation activities will not result in the direct discharge of wastewater to a water of the State. Wastewater generated by OU1 remediation activities will be pretreated and discharged to the existing FEMP wastewater treatment system where it will be combined with other site wastewaters for treatment. Treated wastewaters will be discharged in accordance with the requirements of the FEMP NPDES permit and applicable numeric and narrative water quality standards promulgated in OAC 3745-1.	Process and pit excavation wastewater will not be directly discharged to a water of the state. These wastewaters will be discharged to the existing FEMP wastewater treatment system, in compliance with the BSL WAC, where they will be combined with other site wastewater for treatment. Treated wastewater will be discharged in accordance with the requirements of the FEMP NPDES permit and applicable numeric and narrative quality standards promulgated in OAC 3745-1. Clean water from roofs and storm water flows from the new facilities area for storms greater than the 25-yr, 24-hr storm will be discharged to Paddys Run under the NPDES permit. Discharges of stormwater from the Storm Water Management (SWM) Pond will be included in the NPDES permit modification.	Description of the Operation & Process Sections 2.8, 2.9, 3.6, and 4.0; Design Criteria and Assumptions Section 2.8; Excavation Plan Section 6.0; Pre-Operational Environmental Control Plan Sections 2.3, 3.3, and 6.0; see also Table 3-2.

000157

1321

TABLE 3-1b. CHEMICAL-SPECIFIC ARARS (Continued)

Category	Applicable Requirements	Requirements Assessment	Compliance Strategy	Index to Design
Surface Water Discharges	OAC 3745-1-07, Table 7-11 Outside Mixing Zone 30-Day Average Criteria for Water Hardness Dependent Parameters in Warm Water Habitats Table I-8 in Attachment I contains the average numerical limits for cadmium, copper, chromium, lead, and silver.	OU1 remediation activities will not result in the direct discharge of wastewater to a water of the State. Wastewater generated by OU1 remediation activities will be pretreated and discharged to the existing FEMP wastewater treatment system where it will be combined with other site wastewaters for treatment. Treated wastewaters will be discharged in accordance with the requirements of the FEMP NPDES permit and applicable numeric and narrative water quality standards promulgated in OAC 3745-1.	Process and pit excavation wastewater will not be directly discharged to a water of the state. These wastewaters will be discharged to the existing FEMP wastewater treatment system, in compliance with the BSL WAC, where they will be combined with other site wastewater for treatment. Treated wastewater will be discharged in accordance with the requirements of the FEMP NPDES permit and applicable numeric and narrative quality standards promulgated in OAC 3745-1. Clean water from building roofs and stormwater flows from the new facilities area, for storms greater than the 25-yr 24-hr storm, will be discharged directly to Paddys Run. Work will control contamination in areas subject to the stormwater discharge. Additional discharges of stormwater from the Storm Water Management (SWM) Pond may occur if monitoring shows the water meets the NPDES requirements.	Description of the Operation & Process Sections 2.8, 2.9, 3.6, and 4.0; Design Criteria and Assumptions Section 2.8; Excavation Plan Section 6.0; Pre-Operational Environmental Control Plan Sections 2.3, 3.3, and 6.0; see also Table 3-2.

TABLE 3-1b. CHEMICAL-SPECIFIC ARARS (Continued)

Category	Applicable Requirements	Requirements Assessment	Compliance Strategy	Index to Design
Surface Water Discharges	OAC Table 7-12 Inside Mixing Zone Maximum Criteria for Water Hardness Dependent Criteria in Warm Water Habitats Table I-8 in Attachment I contains numerical limits for cadmium, copper, chromium, lead, and silver.	OU1 remediation activities will not result in the direct discharge of wastewater to a water of the State. Wastewater generated by OU1 remediation activities will be pretreated and discharged to the existing FEMP wastewater treatment system where it will be combined with other site wastewaters for treatment. Treated wastewaters will be discharged in accordance with the requirements of the FEMP NPDES permit and applicable numeric and narrative water quality standards promulgated in OAC 3745-1.	Process and pit excavation wastewater will not be directly discharged to a water of the state. These wastewaters will be discharged to the existing FEMP wastewater treatment system, in compliance with the BSL WAC, where they will be combined with other site wastewater for treatment. Treated wastewater will be discharged in accordance with the requirements of the FEMP NPDES permit and applicable numeric and narrative quality standards promulgated in OAC 3745-1. Clean water from roofs and storm water flows from the new facilities area for storms greater than the 25-yr, 24-hr storm will be discharged to Paddys Run under the NPDES permit. Discharges of stormwater from the Storm Water Management (SWM) Pond will be included in the NPDES permit modification.	Description of the Operation & Process Sections 2.8, 2.9, 3.6, and 4.0; Design Criteria and Assumptions Section 2.8; Excavation Plan Section 6.0; Pre-Operational Environmental Control Plan Sections 2.3, 3.3, and 6.0; see also Table 3-2.

000159

1321

TABLE 3-1b. CHEMICAL-SPECIFIC ARARS (Continued)

Category	Applicable Requirements	Requirements Assessment	Compliance Strategy	Index to Design
Surface Water Discharges	OAC 3745-1-07 Outside Mixing Zone Maximum Criteria for pH dependent Parameters in warm water Aquatic Habitats Table I-10 in Attachment I contains the numerical limits for pentachlorophenol. OAC 3745-1-07 Inside the Mixing Zone Maximum Criteria for pH dependent Parameters in warm water Aquatic Habitats Table I-11 in Attachment I contains the numerical limits for pentachlorophenol.	OU1 remediation activities will not result in the direct discharge of wastewater to a water of the State. Wastewater generated by OU1 remediation activities will be pretreated and discharged to the existing FEMP wastewater treatment system where it will be combined with other site wastewaters for treatment. Treated wastewaters will be discharged in accordance with the requirements of the FEMP NPDES permit and applicable numeric and narrative water quality standards promulgated in OAC 3745-1.	Process and pit excavation wastewater will not be directly discharged to a water of the state. These wastewaters will be discharged to the existing FEMP wastewater treatment system, in compliance with the BSL WAC, where they will be combined with other site wastewater for treatment. Treated wastewater will be discharged in accordance with the requirements of the FEMP NPDES permit and applicable numeric and narrative quality standards promulgated in OAC 3745-1. Clean water from roofs and storm water flows from the new facilities area for storms greater than the 25-yr, 24-hr storm will be discharged to Paddys Run under the NPDES permit. Discharges of stormwater from the Storm Water Management (SWM) Pond will be included in the NPDES permit modification.	Description of the Operation & Process Sections 2.8, 2.9, 3.6, and 4.0; Design Criteria and Assumptions Section 2.8; Excavation Plan Section 6.0; Pre-Operational Environmental Control Plan Sections 2.3, 3.3, and 6.0; see also Table 3-2.

TABLE 3-1b. CHEMICAL-SPECIFIC ARARS (Continued)

Category	Applicable Requirements	Requirements Assessment	Compliance Strategy	Index to Design
Surface Water Discharges	OAC 3745-1-07 Lower Miami River Temperature Criteria in Fahrenheit and degrees (Celsius) Table I-12 in Attachment I contains the acceptable monthly temperatures for water discharged to the Lower Great Miami River.	OU1 remediation activities will not result in the direct discharge of wastewater to a water of the State. Wastewater generated by OU1 remediation activities will be pretreated and discharged to the existing FEMP wastewater treatment system where it will be combined with other site wastewaters for treatment. Treated wastewaters will be discharged in accordance with the requirements of the FEMP NPDES permit and applicable numeric and narrative water quality standards promulgated in OAC 3745-1.	Process and pit excavation wastewater will not be directly discharged to a water of the state. These wastewaters will be discharged to the existing FEMP wastewater treatment system, in compliance with the BSL WAC, where they will be combined with other site wastewater for treatment. Treated wastewater will be discharged in accordance with the requirements of the FEMP NPDES permit and applicable numeric and narrative quality standards promulgated in OAC 3745-1. Clean water from roofs and storm water flows from the new facilities area for storms greater than the 25-yr, 24-hr storm will be discharged to Paddys Run under the NPDES permit. Discharges of stormwater from the Storm Water Management (SWM) Pond will be included in the NPDES permit modification.	Description of the Operation & Process Sections 2.8, 2.9, 3.6, and 4.0; Design Criteria and Assumptions Section 2.8; Excavation Plan Section 6.0; Pre-Operational Environmental Control Plan Sections 2.3, 3.3, and 6.0; see also Table 3-2.
Air Discharges	OAC 3745-17-07 Particulate Matter Standards Visible particulate emissions from any stack may exceed twenty per cent opacity, as a six minute average, for not more than six consecutive minutes in any sixty minutes, but shall not exceed sixty per cent opacity, as a six-minute average, at any time. **See Table 3-2.a for a detailed discussion relative to substantive requirements.**	The State standard for particulate emissions is an ARAR because it places a time limit on particulate emissions that may work in tandem with the Federal annual average. **See Table 3-2.a for additional details.**	Compliance strategy is addressed in Substantive Permitting requirements (see Table 3-2)	See Table 3-2

000161

1321

TABLE 3-1b. CHEMICAL-SPECIFIC ARARS (Continued)

Category	To-Be-Considered Requirements	Requirements Assessment	Compliance Strategy	Index to Design
Radiation	DOE Order 5400.5 Radiation Protection of the Public and the Environment To prevent buildup of radionuclide concentrations in sediment, liquid process waste streams containing radioactive material in settleable solids may be released to natural waterways if the concentration of radioactive material in the solids present in the waste stream do not exceed 5 pCi/g above background levels of settle-able solids of alpha-emitting radionuclides or 50 pCi/g above background level of settle-able solids for beta-gamma-emitting radionuclides. To protect native animal aquatic organisms, the absorbed dose to these organisms shall not exceed 1 rad per day from exposure to the radioactive material in liquid wastes discharged to material waterways.	OU1 remediation activities will not result in the direct discharge of wastewater to a water of the State. Wastewater generated by OU1 remediation activities will be pretreated and discharged to the existing FEMP wastewater treatment system where it will be combined with other site wastewaters for treatment. Treated wastewaters will be discharged in accordance with the requirements of the FEMP NPDES permit and applicable numeric and narrative water quality standards promulgated in OAC 3745-1.	Process and pit excavation wastewater will not be directly discharged to a water of the state. These wastewaters will be discharged to the existing FEMP wastewater treatment system, incompliance with the BSL WAC, where they will be combined with other site wastewater for treatment. Treated wastewater will be discharged in accordance with the requirements of the FEMP NPDES permit and applicable numeric and narrative quality standards promulgated in OAC 3745-1. Clean water from roofs and storm water flows from the new facilities area for storms greater than the 25-yr, 24-hr storm will be discharged to Paddys Run under the NPDES permit. Discharges of stormwater from the Storm Water Management (SWM) Pond will be included in the NPDES permit modification.	Description of the Operation & Process Sections 2.8, 2.9, 3.6, and 4.0; Design Criteria and Assumptions Section 2.8; Excavation Plan Section 6.0; Pre-Operational Environmental Control Plan Sections 2.3, 3.3, and 6.0; see also Table 3-2.
Radiation	DOE Order 5400.5 Radiation Protection of the Public and Environment DOE Order 5400.5 requires compliance with 40 CFR Part 61, Subpart H criterion of 10 mrem/year effective dose equivalent and monitoring of point-source emissions. **See Table 3-1a for a detailed discussion relative to substantive requirements.**	**See Table 3-2.a for additional details.**	Compliance strategy is addressed in Substantive Permitting requirements (see Table 3-2)	See Table 3-2

000162

1321

TABLE 3-1b. CHEMICAL-SPECIFIC ARARS (Continued)

Category	To-Be-Considered Requirements	Requirements Assessment	Compliance Strategy	Index to Design
Radiation	DOE Order 5400.5 Residual plus natural dose limit for public exposure to residual radioactive material are 100 mrem effective dose equivalent per year. Guidelines for residual concentrations of radionuclides in soil shall be derived from the basic dose limits by means of an environment pathway analysis using specific property data where available. Procedures for these derivations are given in DOE/CH-8901. Residual concentrations of radioactive material in soils are defined as those in excess of background concentrations averaged over an area of 100 square meters. Control and Stabilization and Administrative Control features shall be designed to provide to the extent reasonably achievable, an effective life of 50 years with a minimum life of at least 25 years. Groundwater shall be protected in accordance with legally applicable Federal and State standards.	All waste pit material will be removed from OU1. The only residual material will be soil that meets the Final Remediation Levels established by the OU5 remedial action. The Final Remediation Levels have been developed in accordance with this requirement. Compliance will be demonstrated on a sitewide basis following remediation of the entire site by the Soil Characterization & Excavation Project. Some material from OU1 will be placed into the On-Site Disposal Facility. The disposal facility will be designed to meet this requirement and demonstration of compliance will be performed by the On-Site Disposal Cell Project.	All waste pit material will be removed from OU1. The only residual material will be soil that meets the established FRLs established by FEMP in accordance with this requirement. Sitewide compliance will be demonstrated by FEMP. Some residual contaminated soils from OU1 may be placed into the OSDF. This determination will be made in accordance with the final site grading plan. The excavation of waste pit material will be executed to minimize and control releases to groundwater by reasonably maintaining the pits in a pumped-down condition after removal of liners and prior to confirmation that removal meets the established FRLs.	Description of the Operation & Process Sections 2.1, 2.2, 2.3, and 2.8; Design Criteria and Assumptions Sections 2.1, 2.3, 2.8, and 4.1.

000163

1321

TABLE 3-1b. CHEMICAL-SPECIFIC ARARS (Continued)

Category	To-Be-Considered Requirements	Requirements Assessment	Compliance Strategy	Index to Design
Soil Remediation	<u>40 CFR 761.125 Requirements for PCB Spill Cleanup</u> PCBs at concentrations greater than 50 ppm are subject to decontamination TSCA requirements in 40 CFR 761.120(b). PCB containers containing non-liquid PCBs, such as contaminated soil, rags, and debris designated for disposal may be stored temporarily (up to 30 days from the date of removal) in an area that does not comply with the storage building requirements at 40 CFR 761.65 (b). <u>40 CFR 761.125°</u> Soils in non-restricted access areas contaminated by a PCB spill will be decontaminated to 50 ppm PCB by weight, provided that the soil is excavated to a minimum depth of 10 inches. The excavated soils will be replaced with clean soils, i.e., containing <1 ppm PCB, and the spill site will be restored (e.g., replacement of turf) [40 CFR 761.125(c)(4)(v)]. For soils in restricted access areas, decontaminate to 25 ppm PCB by weight [40 CFR 761.125(c)(3)(v)].	Concentrations of PCBs at OU1 are expected to be less than 50 ppm. This regulation would then be considered guidance to be considered.	Concentrations of PCBs at OU1 are expected to be less than 50 ppm. Should regulated PCB levels be encountered, the material will be segregated and managed as non-typical waste.	Description of the Operation & Process Section 4.0; Design Criteria and Assumptions Section 4.2

000164

1321

TABLE 3-1c. ACTION-SPECIFIC ARARS
(APPLICABLE REQUIREMENTS; RELEVANT AND APPROPRIATE REQUIREMENTS; TBCs)

Category	Applicable Requirements	Requirements Assessment	Compliance Strategy	Index to Design
Radon	40 CFR Part 61, Subpart Q Emission of radon-222 from DOE interim and storage facilities is limited to 20 pCi/m²/s on an average over the entire source. **See Table 3-2.a for a detailed discussion relative to substantive requirements.**	**See Table 3-2.a for additional details.**	Compliance strategy is addressed in Substantive Permitting requirements (see Table 3-2)	See Table 3-2
Stormwater Control	40 CFR 122.26 (OAC 3745-38) Discharge of Storm Water Runoff Stormwater runoff from landfills, construction sites, and industrial activities must be monitored and controlled. A Storm Water Pollution Prevention Plan (SWPPP) is required for construction activities which result in a total land disturbance of 5 or more acres.	Remedial activities will comply with an approved FEMP SWPPP which will include specific inspection and monitoring criteria applicable to all site projects. Guidelines set forth in Rainwater and Land Development, Ohio's Standard for Stormwater Management Stream Protection, 1996, will be followed.	Routine inspections of the OU1 stormwater management features will be performed and documented throughout the OU1 remedial activities. A monitoring program will be established for the SWM Pond consistent with its requirements of the SWPPP, to allow discharge of non-contaminated stormwater directly to Paddy's Run. Existing procedures will be used as appropriate to monitor and control stormwater runoff.	Description of the Operation & Processes Sections 2.8, 2.9, and 4.0; Design Criteria and Assumptions Section 2.8; Excavation Plan Section 6.0; Pre-Operational Environmental Control Plan Sections 2.3, 3.3, and 6.0.
Well Abandonment	OAC 3745-9-10 Ohio Water Well Standards Abandonment of Test Holes and Wells	These requirements for closure of test holes and wells at the FEMP are implemented through existing site procedures.	The closure of test holes and wells at OU1 will be implemented through the existing FEMP site procedures.	N/A
Hazardous Waste	ORC 3734.02(H) Digging Where Hazardous or Solid Waste was Located Filling, grading, excavating, building, drilling, or mining on land where hazardous waste or solid waste facility was operated is prohibited without prior approval from the Director of the Ohio EPA.	This requirement needs no further discussion relative to attainment, since Ohio EPA concurrence on the OU1 ROD has met the intent of this requirement.	Ohio EPA concurrence on the OU1 ROD has met the intent of this requirement.	N/A
Hazardous Waste	OAC 3745-56-51, 54 and 58; Waste Piles These requirements specify design and operating requirements, monitoring and inspection, closure and post-closure care. **See Table 3-2c for a detailed discussion relative to specific substantive requirements.**	The requirements for hazardous waste piles are potentially applicable only to waste excavated from Pits 4 and 5. **See Table 3-2c for additional details.**	Compliance strategy is addressed in Substantive Permitting requirements (see Table 3-2)	See Table 3-2

000165

1321

TABLE 3-1c. ACTION-SPECIFIC ARARS (Continued)

Category	Applicable Requirements	Requirements Assessment	Compliance Strategy	Index to Design
Air Discharges	OAC 3745-15-07(A) Ohio Air Pollution Control Regulations Describes forms of air pollution nuisances and prohibits their emission or escape. **See Table 3-2.a for a detailed discussion relative to substantive requirements.**	Both excavation and waste treatment processes have the potential to generate prohibited fugitive emissions. **See Table 3-1a for additional details.**	Compliance strategy is addressed in Substantive Permitting requirements (see Table 3-2)	See Table 3-2
Fugitive Dust	OAC 3745-17-08 Control of Fugitive Dust Requires the minimization or elimination of visible emissions of fugitive dust generated during grading, loading, or construction operations and other practices which emit fugitive dust. **See Table 3-2.a for a detailed discussion relative to substantive requirements.**	The implementation of remedial action alternatives will require the movement of dirt and other material likely to result in fugitive dust emissions. **See Table 3-2.a for additional details.**	Compliance strategy is addressed in Substantive Permitting requirements (see Table 3-2)	See Table 3-2
Air Discharges	OAC 3745-21-02© and -03(D) Ambient air quality standards and guidelines and methods of ambient air quality measurements (for non-methane hydrocarbons). Mean ambient concentration of non-methane hydrocarbons not to exceed 160 μg/cubic meters (0.24 ppm as carbon) between 6 and 9 a.m.; methods for determining ambient concentration of non-methane hydrocarbons. **See Table 3-2.a for a detailed discussion relative to substantive requirements.**	During drying, hydrocarbon soil contaminants may be evolved with the steam. An uncontrolled release could lead to a violation of this standard. Air emissions will be determined during design and appropriate design measures will be included to insure compliance with this requirement. **See Table 3-2.a for additional details.**	Compliance strategy is addressed in Substantive Permitting requirements (see Table 3-2)	See Table 3-2

000166

1321

TABLE 3-1c. ACTION-SPECIFIC ARARS (Continued)

Category	Applicable Requirements	Requirements Assessment	Compliance Strategy	Index to Design
Air Discharges	OAC 3745-21-07 (G)(2) Control of emissions of organic material from stationary sources. Emissions of photochemical reactive material from processes, including drying, not to exceed 40 lbs/day, with a peak of 8 lbs/hour. **See Table 3-2.a for a detailed discussion relative to substantive requirements.**	Data from the OU1 Remedial Investigation Report indicate that VOCs do not need to be controlled because of their low concentrations. Although the concentration of organic material in the pit waste is expected to be low, the volume of the waste to be treated could result in sufficient emissions for this standard to be violated if emissions are uncontrolled. Note that it is current Ohio EPA policy to consider all VOCs to be photochemical reactive materials. **See Table 3-2.a for additional details.**	Compliance strategy is addressed in Substantive Permitting requirements (see Table 3-2)	See Table 3-2
Air Discharges	OAC 3745-31-05(A)(3) Permit to Install The director shall issue a permit to install if he determines that the installation or modification and operation of the air contaminant source will employ the best available technology. **See Table 3-2.a for a detailed discussion relative to substantive requirements.**	Although an administrative Permit to Install is not required for alternatives involving treatment, the substantive requirements of this section must be met by employing Best Available Technology (BAT) for treating particulate and off-gas emissions. **See Table 3-2.a for additional details.**	Compliance strategy is addressed in Substantive Permitting requirements (see Table 3-2)	See Table 3-2
NEPA	10 CFR 1021.2 DOE actions must be subjected to NEPA evaluation as outlined by CEQ regulations in 40 CFR 1500-1508.	On June 13, 1994, the DOE issued a revised policy statement on NEPA. The new policy allows DOE, at CERCLA sites, to rely on the CERCLA process to satisfy the procedural aspects of NEPA. NEPA values have been incorporated into the Final Operable Unit 1 Feasibility Study Report.	NEPA values have been incorporated into the Final OU1 Feasibility Study Report.	N/A

000167

1321

TABLE 3-1c. ACTION-SPECIFIC ARARS (Continued)

Category	Applicable Requirements	Requirements Assessment	Compliance Strategy	Index to Design
Air Discharges	40 CFR 61.670 Subpart OOO Stack emissions from affected facilities shall not: • Contain particulate matter in excess of 0.05 g/dscm; or • Exhibit greater than 7 percent opacity, unless the stack emissions are discharged from an affected facility using a wet scrubbing control device. **See Table 3-2.a for a detailed discussion relative to substantive requirements.**	These standards are relevant and appropriate to OU1 remedial activities since they specify requirements for crusher and conveyor systems. The standards will be considered when determining BAT requirements for these systems in accordance with OAC 3745-31-05(A)(3). **See Table 3-2.a for additional details.**	Compliance strategy is addressed in Substantive Permitting requirements (see Table 3-2)	See Table 3-2
BMP Program	40 CFR 125.100 and 125.104 Discharge of Treatment System Effluent Best Management Practices Development and implement a BMP program to prevent the release of toxic or hazardous pollutants to waters of the U.S. Development and implementation of a sitewide BMP Program is also required as a condition of the FEMP NPDES Permit.	As of September 27, 1995 [the issuance date of the current site NPDES permit (Ohio EPA Permit No. 1IO00004*ED)] activities at the Fernald Site are no longer subject to the provisions of the site BMP Plan or 40 CFR 125.100 and 125.104. Although no longer subject to the provisions of these requirements, discharges of stormwater and process wastewater must be managed in accordance with all applicable site procedures, the FEMP SWPPP and SPCCC Plans, and the current NPDES permit to mitigate potential releases of hazardous pollutants to waters of the U.S.	No action is required.	N/A
Solid Waste	40 CFR 241 Subpart B (OAC 3745-27), RCRA Subtitle D On-Property Solid Nonhazardous Waste Management Facilities Design standards are presented in the following citations: 241.200-2, 241.201-2, 241.202-2, 241.203-2, 241.204-2, 241.205-2, 241.206-2, 241.207-2, 241.208-2, 241.209-2, and 241.210-2.	Land disposal of solid waste will not occur in OU1. Solid waste from OU1 destined for on-site disposal will be sent to the On-Site Disposal Facility. The OU1 selected remedy involves handling residual contaminated soils and oversized materials in accordance with the OU5 and OU3 RODs, respectively. The OU1 design will necessarily reflect any requirements developed through the On-Site Disposal Facility design, relative to activities resulting in the placement of OU1 materials in the On-Site Disposal Facility.	Land disposal of solid waste will not occur in OU1.	Overview of Remedial Design Package Section 2.2; Design Criteria and Assumptions Section 2.1 and 4.0.

000168

TABLE 3-1c. ACTION-SPECIFIC ARARS (Continued)

Category	Applicable Requirements	Requirements Assessment	Compliance Strategy	Index to Design
Hazardous Waste	40 CFR 262.11 (OAC 3745-52-11) Hazardous Waste Determinations Any generator of waste must determine whether or not the waste is hazardous. **See Table 3-2c for a detailed discussion relative to substantive requirements.**	Excavation, size reduction, homogenization, blending, and drying of pit wastes are process activities which result in generation of a single waste stream. The newly generated waste is the waste stream that will be shipped off-site for disposal and represents the waste that must comply with regulatory requirements and disposal facility waste acceptance criteria. As documented in the OU1 Feasibility Study, Proposed Plan, and Record of Decision, this waste stream does not contain RCRA listed wastes; and in accordance with US EPA guidance for Superfund sites and 40 CFR 262.11 (c), the waste will be sampled for RCRA characteristics only. The methods that will be used to demonstrate compliance with regulatory criteria and WAC will be included in the Sampling and Analysis Plan developed to support the implementation of off-site shipping/ disposal. **See Table 3-2c for additional details.**	Compliance strategy is addressed in Substantive Permitting requirements (see Table 3-2)	See Table 3-2
Hazardous Waste	Closure 40 CFR 264, Subpart G (OAC 3745-55-(11-16)) Operator must close facility in a manner that: • Minimizes the need for further maintenance • Minimizes post-closure escape of hazardous constituents • Complies with specific unit type closure requirements **See Table 3-2c for a detailed discussion relative to substantive requirements.**	As documented in the Draft Director's Findings and Orders between Ohio EPA and DOE, demonstration of compliance with substantive closure and post-closure requirements for hazardous waste management units will be documented in remedial design and remedial action deliverables. DOE will provide a cross-reference to Ohio EPA that will contain an index to closure and post-closure requirements within the RD/RA deliverables. The RD/RA deliverables will be submitted for review in accordance with the Amended Consent Agreement. **See Table 3-2c for additional details.**	Compliance strategy is addressed in Substantive Permitting requirements (see Table 3-2)	See Table 3-2

000169

1321

TABLE 3-1c. ACTION-SPECIFIC ARARS (Continued)

Category	Applicable Requirements	Requirements Assessment	Compliance Strategy	Index to Design
Air Discharges	40 CFR 264.1030 - 264.1036, Subpart AA Air Emission Standards for Process Vents • Reduce total organic emissions below 1.4 kg/h (3 lb/h) and 2.8 Mg/yr (3.1 tons/yr) • Control device (condenser and absorber) must recover organic vapors with an efficiency of 95 percent or greater. **See Table 3-2.a for a detailed discussion relative to substantive requirements.**	No regulations have been promulgated for process vents associated with thermal drying; however, 40 CFR 264.1030 - .0136 will be relevant and appropriate but not applicable to air emission standards for process vents associated with thermal drying. **See Table 3-2.a for additional details.**	Compliance strategy is addressed in Substantive Permitting requirements (see Table 3-2)	See Table 3-2
Hazardous Waste	Post-Closure 40 CFR 264 Subpart G 40 CFR 264.117 (OAC 3745-55-17) 40 CFR 264.119 (OAC 3745-55-19) Post-closure care and use of property for a period as necessary to protect human health and the environment including: • Access controls • Monitoring Post-closure notices must include deed notation/use restriction. **See Table 3-2c for a detailed discussion relative to substantive requirements.**	As documented in the Draft Director's Findings and Orders between Ohio EPA and DOE, demonstration of compliance with substantive closure and post-closure requirements for hazardous waste management units will be documented in remedial design and remedial action deliverables. DOE will provide a cross-reference to Ohio EPA that will contain an index to closure and post-closure requirements within the RD/RA deliverables. The RD/RA deliverables will be submitted for review in accordance with the Amended Consent Agreement. **See Table 3-2c for additional details.**	Compliance strategy is addressed in Substantive Permitting requirements (see Table 3-2)	See Table 3-2
Monitoring	OAC 3745-57-91 and 92, Miscellaneous Methods of Waste Treatment Parts 91 and 92 include requirements for miscellaneous units environmental performance standards and monitoring, analysis, inspection, response, reporting, and corrective action.	This ARAR will be met by the implementation of activities associated with other ARARs that are protective of human health and the environment. Releases to the environment will be controlled using appropriate ventilation (for air emissions) and a stormwater/wastewater collection system (for water discharges).	Releases to the environment will be controlled using appropriate ventilation (for air emissions) and a stormwater/wastewater collection system (for water discharges).	Description of the Operation & Processes Sections 2.3, 2.8, 4.0; Design Criteria and Assumptions Section 3.1.

000170

1321

TABLE 3-1c. ACTION-SPECIFIC ARARS (Continued)

Category	Applicable Requirements	Requirements Assessment	Compliance Strategy	Index to Design
CAMUs	Corrective Action for SWMUs 40 CFR Subpart S 40 CFR 264.552..553 Corrective Action Management Units (CAMUs) might be designed at the site as areas where remediation wastes (solid, hazardous, or contaminated media and debris) might be placed during the process of remediation. Temporary units (TUs) consisting of tanks and container storage units might be used to store and treat hazardous waste during the process of corrective action.	As an ARAR, the CAMU designation does not apply to waste disposed off-site; however, it does apply to waste that is managed on-site. OU1 pit wastes will be disposed of at an off-site facility and therefore, must meet all regulatory and disposal facility requirements. CAMUs can apply to residual soils remaining on site. As such, residual OU1 soils will be managed in accordance with the OU5 ROD which designates the FEMP site as a CAMU.	Residual OU1 soils will be managed in accordance with the OU5 ROD which designates the FEMP site as a CAMU.	Description of the Operation and Processes Section 2.0; Design Criteria and Assumptions Section 2.0; Excavation Plan; Site Preparation Package.
Category	**To-Be-Considered Requirements**	**Requirements Assessment**	**Compliance Strategy**	**Index to Design**
	DOE Order 5400.1 @ p. iv - 1 Since each DOE facility is unique, the need and level of effort for monitoring programs shall be determined by the appropriate field organization on a case-by-case basis.	OU1 is part of a DOE facility and is subject to these orders. The existing FEMP sitewide monitoring program will be supplemented, as necessary, to address the OU1 remediation facilities. Any additional monitoring will be reflected in the Sampling and Analysis Plan.	Additional monitoring activities will be reflected in the Sampling and Analysis Plan.	Description of the Operation & Processes Section 4.0; Design Criteria and Assumptions Sections 2.0 and 4.0.
	DOE Order 5400.1 @ iv - 9, 10 Groundwater that is or could be affected by DOE activities shall be monitored to determine and document the effects of operations on groundwater quality and quantity and to demonstrate compliance with DOE requirements and applicable Federal, State, and local laws and regulations.	As discussed in Subsection 4.4.1 of the OU1 Remedial Design Work Plan, the existing FEMP groundwater monitoring program will be used for assessing potential impacts to the groundwater due to planned OU1 remediation activities.	The existing FEMP groundwater monitoring program will be used for assessing potential impacts to the groundwater due to planned OU1 remediation activities	N/A

000171

1321

TABLE 3-1c. ACTION-SPECIFIC ARARS (Continued)

Category	To-Be-Considered Requirements	Requirements Assessment	Compliance Strategy	Index to Design
	DOE Order 5820.2A @ 1 Radioactive Waste Management DOE 5820.2A III.3h Management of Low-Level Waste, Long-Term Storage Radioactive and mixed wastes shall be managed in a manner that assures protection of the health and safety of the public, DOE and contractor employees, and the environment. 5820.2A III.3h requires achieving performance objectives of DOE. 5820.2A III.3a requires records and documentation be kept for storage of low-level waste and permits the storage of waste until disposal by approved methods.	The treatment and storage of OU1 radioactive wastes, and the other pollutants or hazardous substances they contain, will be accomplished in a manner that complies with all applicable Federal, State and local environmental, safety, and health laws and regulations, and DOE requirements.	The treatment and storage of OU1 radioactive wastes, and the other pollutants or hazardous substances they contain, will be accomplished in a manner that complies with all applicable Federal, State, and local environmental, safety, and health law and regulations, and DOE requirements.	Description of the Operation & Processes Sections 2.2, 2.3, 2.4, 2.5, 2.6, 2.7, 2.8, 2.9, 3.2, 3.3, 3.4, 3.5, and 3.6; Design Criteria and Assumptions Sections 2.2, 2.3, 2.4, 2.5, 2.6, 2.7, 2.8, 4.1, and 4.2; Excavation Plan Sections 5.0, 6.0, and 7.0.

000172

1321

TABLE 3-2a. SUBSTANTIVE PERMITTING REQUIREMENTS FOR AIR CONTAMINANT SOURCES

Citation	Substantive Permitting Requirements	Requirements Assessment	Compliance Strategy	Index to Design
		Substantive Air Permits - Dryer		
Permits to Install New Sources of Emissions OAC 3745-31-05(A)	The director shall issue a permit to install if he determines that the installation or modification and operation of an air contaminant source will: • Not prevent or interfere with the attainment or maintenance of applicable ambient air quality standards; • Not result in a violation of any applicable air pollution control laws; and • Employ best available technology to control emissions.	Permits to Install would be required for facilities such as a fueling station, rotary dryer, and gas furnace in absence of the CERCLA 121 (e) permitting exemption. These sources will be installed such that they do not interfere with the attainment or maintenance of any applicable air quality standards or cause a violation of applicable air control laws. BAT will be employed to control both point source and fugitive emissions associated with the project. BAT for particulate radionuclides emissions shall be HEPA Filtration with differential pressure gauge and low differential pressure alarm to be installed on the dryer off-gas system.	Permits to install would be required for the rotary dryer, gas/oil furnace and fueling station(s), in the absence of the CERCLA 121(e) permitting exemption. These sources will be installed such that they do not interfere with the attainment or maintenance of any applicable air quality standards or cause a violation of applicable air control laws. BAT will be employed to control both point source; and fugitive emissions associated with the project. BAT for organic emission is a carbon filter. BAT for particulate radionuclide emissions is HEPA Filtration with differential pressure gauge and low differential pressure alarm to be installed on the dryer off-gas system.	Description of the Operation and Processes Sections 2.4, 2.5, 2.6, 3.2, 3.3, 3.4, 4.0, and 5.4; Design Criteria and Assumptions Sections 2.4, 2.5, 2.6, and 3.1

TABLE 3-2a. SUBSTANTIVE PERMITTING REQUIREMENTS FOR AIR CONTAMINANT SOURCES (CONTINUED)

Citation	Substantive Permitting Requirements	Requirements Assessment	Compliance Strategy	Index to Design
Substantive Air Permits - Dryer				
Particulate Matter Standards OAC 3745-17-07	Visible particulate emissions from any stack may exceed twenty percent opacity, as a six minute average, for not more than six consecutive minutes in any sixty minutes, but shall not exceed sixty percent opacity, as a six minute average, at any time.	BAT shall mean that visible emissions of particulate shall not exceed zero (0%) percent opacity from the discharge stack of any control device associated with this source excluding water vapor.	Visible emissions of the particulate from the dryer stack will not exceed 0 percent opacity through the use of HEPA filtration with differential pressure gauges and low differential pressure alarm. Fugitive dust emissions, primarily from excavation, hauling, and processing soils will be mitigated by the use of the following, as appropriate, when visible dust is present: - Water or other dust suppression chemicals - Periodic application of water or other suitable dust suppressing chemicals is required on all dirt or gravel roads, parking lots, or other surfaces that can cause fugitive emissions. - Maintaining roadways in clean conditions - Covering open bodied vehicles when transporting materials likely to become airborne. Reasonably available control measures shall include: use of water or other suitable dust suppression chemicals for the control of fugitive dust, conducting shredding and screening operations in a processing building, covering of open bodied vehicles when transporting materials likely to become airborne, appropriate maintenance of roadways and work areas to control dust and the visual monitoring for visible dust. For materials stored or exposed for extended periods, more stringent BAT controls will be applied, including application of PolyShell or maintaining the waste surface in a moist condition thereby eliminating the potential for airborne emissions.	Description of the Operation and Processes Sections 2.4, 2.5, 2.6, 3.2, 3.3, and 3.4; Design Criteria and Assumptions Sections 2.4, 2.5, 2.6, and 3.1; Pre-Operational Environmental Control Plan Section 5.0

TABLE 3-2a. SUBSTANTIVE PERMITTING REQUIREMENTS FOR AIR CONTAMINANT SOURCES (CONTINUED)

Citation	Substantive Permitting Requirements	Requirements Assessment	Compliance Strategy	Index to Design
		Substantive Air Permits - Dryer		
National Emission Standards for Hazardous Air Pollutants (NESHAP) - 40 CFR Part 61, Subpart H - Emissions of Radionuclides Other Than Radon From DOE Facilities 40 CFR 61.90 and 40 CFR 61.96(b) and 40 CFR 61.92 (DOE 5400.5) and 40 CFR 61.93(b)	An application for approval does not have to be filed for radionuclide sources if the effective dose equivalent caused by all emissions from the new construction or modification is less than 0.1 mrem per year. Radiological emissions (except radon-222 and radon-220) to the ambient air from DOE facilities shall not exceed those amounts that would cause any member of the public to receive an effective dose equivalent of 10 mrem in any one year. Continuous emission monitoring is required for stacks and vents that have the potential, under normal operating conditions, but without emission control release radionuclides in sufficient quantities to cause any member of the general public to receive an effective dose equivalent of 0.1 mrem/year or greater.	HEPA filtration is BAT for radionuclide emissions and shall be installed to minimize radiological emissions to the ambient air and the contribution to the effective dose equivalent to any member of the public from the dryer stack. If determined to be necessary, based on modeling of radionuclide emissions to the site boundary, a continuous stack monitor shall be operated when radionuclide emissions are exhausted through the stack. The monitoring system shall have an isokinetic sampler designed and built in accordance with 40 CFR 61.93. The sampler shall include a radiation monitor with a high radiation alarm.	HEPA filtration is BAT for radionuclide emissions and shall be installed to minimize radiological emissions to the ambient air and the contribution to the effective dose equivalent to any member of the public from the dryer stack. Radon emission from the dryer or other point sources will meet a stack limit based on a maximum allowable off-site impact of 0.5 pCi/L annual average. Air emissions data and design assumptions will be provided to FDF for incorporation into the site-wide air model for calculation of stack limits. An independent performance test firm shall be retained to verify BAT is being met for emissions. To confirm operation of the CEM, sampling will be done during the performance test using Method 114. The monitoring system shall have an isokinetic sampler design and built in accordance with 40 CFR 61.93. The sampler shall include a radiation monitor with a high radiation alarm. To solve problems with false alarms by the stack monitor due to buildup of radon daughters on the stack filters, and alpha CAM shall be installed in the stack setup to only detect radionuclides(s) of choice.	Description of the Operation and Processes Sections 2.4, 2.5, 2.6, 3.2, 3.3, 3.4 and 4.0; Design Criteria and Assumptions Sections 2.4, 2.5, 2.6, and 3.1

000175

1321

TABLE 3-2a. SUBSTANTIVE PERMITTING REQUIREMENTS FOR AIR CONTAMINANT SOURCES (CONTINUED)

Citation	Substantive Permitting Requirements	Requirements Assessment	Compliance Strategy	Index to Design
		Substantive Air Permits - Dryer		
Radon Emissions 40 CFR 192, Subpart A	Radon emissions from the dryer or other point sources shall meet a stack limit based on a maximum allowable off-site impact of 0.5 pCi/l annual average for each point source. This limit is based on 40 CFR 192, Subpart A. Although this limit is not directly applicable to point sources, applying to the impact from restored sites and not sites under remediation, it is being identified as a relevant and appropriate limit. To calculate the stack limit for a point source, EPA-approved dispersion modeling shall be used.		Radon emissions from the dryer or other point sources shall meet stack limits based on a maximum allowable off-site impact of 0.5 pCi/L annual average. Design data shall be provided to FDF for determination of the emissions limit using the FEMP site-wide model.	Description of the Operation and Processes Sections 2.4, 2.5, 2.6, 3.2, 3.3, 3.4, and 4.0; Design Criteria and Assumptions Sections 2.4, 2.5, 2.6, and 3.1
Ohio EPA Air Toxics Policy	The current PTI regulations provide the Director of Ohio EPA with a mechanism to require the evaluation of toxic air contaminants from new sources. The Ohio EPA Air Toxics Policy provides a mechanism for calculating the Maximum Acceptable Ground-Level Concentration (MAGLC) for a toxic substance. This value at the site boundary will be modeled to the stack to determine a stack limit. All toxic compounds that will exceed the stack limit shall be controlled administratively or by BAT to lower emissions to below the calculated stack limit.	For toxic compound emissions that were calculated to exceed the established stack limit, administrative controls shall be implemented or emissions shall be controlled by implementing BAT for toxic emissions. BAT for toxic emissions shall be throughput/materials restrictions or carbon beds for organic, caustic scrubbers for acidic fumes, or condenser for organic and acidic fumes. Performance of these control measures will be verified through performance testing during initial operation.	Administrative controls will be implemented or emissions will be controlled by implementing BAT for toxic emissions that are calculated to exceed stack limits. BAT for toxic emissions will be throughput/materials restriction or carbon beds for organic vapors, caustic addition for acidic fumes, and condenser for organic and acidic fumes. Performance of these control measures will be verified through performance testing during initial operation.	Description of the Operation and Processes Sections 2.5, 2.6, 3.3, 3.4, and 4.0; Design Criteria and Assumptions Sections 2.5, 2.6 and 3.1
Air Emission Standards for Process Vents 40 CFR 264.1030-264.1036	No regulations have been promulgated for process vents associated with thermal drying, however, 40 CFR 264.1030-1036 will be relevant and appropriate but not applicable to air emission standards for process vents associated with thermal drying.	To control organic emissions, BAT shall be implemented. BAT for organic emissions shall be either carbon beds or condensers or administrative controls.	No process vents other than vent stacks will be utilized on the dryer as combustible atmospheres are not expected. BAT for organic emissions of carbon beds and condensers will be employed.	Description of the Operation and Processes Sections 2.5, 2.6, 3.3, and 3.4; Design Criteria and Assumptions Sections 2.5, 2.6 and 3.1

000176

1321

TABLE 3-2a. SUBSTANTIVE PERMITTING REQUIREMENTS FOR AIR CONTAMINANT SOURCES (CONTINUED)

Citation	Substantive Permitting Requirements	Requirements Assessment	Compliance Strategy	Index to Design
		Substantive Air Permits - Dryer		
Air Quality Standards 40 CFR 60.670 Subpart OOO	Stack emissions from affected facilities shall not: contain particulate matter in excess of 0.05 g/dscm; or exhibit greater than 7 percent opacity, unless the stack emissions are discharged from an affected facility using a wet scrubbing control device. These standards are relevant and appropriate since shredder and conveyor systems were identified in the Operable Unit 1 FS.	Shredder and conveyor systems will be enclosed with dust suppression system to meet this requirement. BAT for particulate radionuclides emissions shall be HEPA Filtration with differential pressure gauge and low differential pressure alarm to be installed on the dryer off-gas system.	Conveyor systems installed outdoors will be covered type with water spray dust suppression system to control airborne dust. Shredder and conveyor systems installed inside buildings need not be covered and will have water spray dust suppression systems to control airborne dust. A wet scrubbing system has been utilized.	Description of the Operation and Processes Sections 2.4, 2.5, 2.6, 3.2, 3.3, and 3.4; Design Criteria and Assumptions Sections 2.4, 2.5, 2.6, and 3.1
Air Quality Standards OAC 3745-21-07(G)(2)	Emissions of photochemical reactive material from processes, including drying, not to exceed 40 lbs/day, with a peak of 8 lbs/hour.	BAT shall be implemented to control organic emissions. BAT for organic emissions shall be either administrative controls or installing carbon beds or a condenser.	BAT shall be implemented to control organic emissions. BAT for organic emissions on the dryer shall be vapor condensation combined with carbon beds. BAT for other processes shall be application of administrative controls.	Description of the Operation and Processes Sections 2.5, 2.6, 3.3, and 3.4; Design Criteria and Assumptions Sections 2.5, 2.6, and 3.1.
Air Quality Standards OAC 3745-21-02© and OAC 3745-21-03(D)	This requirement covers ambient air quality standards, guidelines, and methods of ambient air quality measurements for non-methane hydrocarbons. Mean ambient concentration of non-methane hydrocarbons not to exceed 160 micrograms/cubic meters (0.24 ppm as carbon) between 6 and 9 a.m.; methods for determining ambient concentration of non-methane hydrocarbons.	During drying, hydrocarbon soil contaminants may be evolved with the steam. An uncontrolled release could lead to a violation of this standard. BAT shall be implemented to control non-methane hydrocarbon emissions. BAT to reduce non-methane hydrocarbon emissions shall be either administrative controls or installing carbon beds or a condenser. Compliance to this standard shall be demonstrated using EPA-approved air modeling.	BAT shall be implemented to control organic emissions. BAT for organic emissions on the dryer shall be vapor condensation combined with carbon beds. BAT for other processes shall be application of administrative controls. Compliance to this standard shall be demonstrated using the FEMP site-wide air model based upon design assumptions and data from the performance test.	Description of the Operation and Processes Sections 2.5, 2.6, 3.3, 3.4, and 4.0; Design Criteria and Assumptions Sections 2.5, 2.6, and 3.1.
General Provisions on Air Pollution Control OAC 3745-15-07(A)	Emission of any substance into the air in such a manner or in such amounts as to endanger the health, safety or welfare of the public, or cause unreasonable injury or damage to property, is hereby found and declared a public nuisance. It shall be unlawful for any person to cause, permit, or maintain any such public nuisance.	Potential emissions from the dryer shall be evaluated during the design phase. Emissions shall be controlled using BAT either administratively or installing BAT control equipment.	Potential emissions from the dryer will be evaluated during the design phase. Using the FDF site-wide dispersion model emissions will be controlled using BAT either administratively and/or installing BAT control equipment. Fugitive emissions will be controlled using BAT. See OAC 3745-17-07(B) and OAC 3745-17-8(B).	Description of the Operation and Processes Sections 2.4, 2.5, 2.6, 3.2, 3.3, 3.4 and 4.0; Design Criteria and Assumptions Sections 2.4, 2.5, 2.6, and 3.1
Nitrogen Oxide Standards OAC 3745-23-06(B)	Except as otherwise provided in these regulations, all stationary nitrogen oxide emission sources shall minimize nitrogen oxide emission by use of the latest available control techniques and operating practices in accordance with best current technology.	To minimize nitrogen oxide emissions, the dryer shall be equipped with low NOx burners which is considered BAT for gas-fired burners.	To minimize nitrogen oxide emissions the dryer will be equipped with low NOx burners which is considered BAT for gas or oil fired burners.	Description of the Operation and Processes Sections 2.5 and 3.3; Design Criteria and Assumptions Section 2.5.

TABLE 3-2a. SUBSTANTIVE PERMITTING REQUIREMENTS FOR AIR CONTAMINANT SOURCES (CONTINUED)

Citation	Substantive Permitting Requirements	Requirements Assessment	Compliance Strategy	Index to Design
Excavated Working Materials - Materials Being Excavated, Transported, Stored, or Blended				
Permits to Install New Sources of Emissions OAC 3745-31-05(A)	The director shall issue a permit to install if he determines that the installation or modification and operation of an air contaminant source will: ≡ Not prevent or interfere with the attainment or maintenance of applicable ambient air quality standards; • Not result in a violation of any applicable air pollution control laws; and • Employ best available technology to control emissions.	Permits to Install would be required for facilities such as a fueling station, rotary dryer, and gas furnace in absence of the CERCLA 121 (e) permitting exemption. These sources will be installed such that they do not interfere with the attainment or maintenance of any applicable air quality standards or cause a violation of applicable air control laws. BAT will be employed to control both point source and fugitive emissions associated with the project.	Permits to install would be required for the rotary dryer, gas/oil furnace and fueling station(s), in the absence of the CERCLA 121(e) permitting exemption. Sources will be installed such that they do not interfere with the attainment or maintenance of any applicable air quality standards or cause a violation of applicable air control laws. BAT will be employed to control both point source and fugitive emissions associated with the project.	Description of the Operation and Processes Sections 2.1, 2.2, 2.3, 2.7, 3.1, and 3.5; Design Criteria and Assumptions Sections 2.1, 2.2, 2.3, 2.7, 3.1, and 7.3; Excavation Plan Section 5.0; Pre-Operational Environmental Control Plan Section 5.0.
Radon Emissions	Radon emissions from excavated working materials are intermittent fugitive sources and will be controlled by implementing BAT with no numerical emission rate limit. This policy is described in greater detail in Section J.4.2.2.3 of this Attachment.	BAT control for radon emissions from excavated working materials can be, but is not limited to, applying water or a dust suppressant over the residues, or work practices to minimize handling, disturbances or time exposed. For storage piles that will be stored for an extended period of time, more stringent BAT controls shall be implemented such as applying tarps or building a ventilated temporary structure with controls such as carbon beds.	BAT control for radon emissions from excavated working materials shall include, but not be limited to, applying water or a dust suppressant over the residues, or work practices to minimize handling, disturbances, or time exposed. For storage piles needed for an extended period of time, more stringent BAT controls shall be implemented such as applying polyshell.	Description of the Operation and Processes Sections 2.1, 2.2, 2.3, and 3.1; Design Criteria and Assumptions Sections 2.1, 2.2, 2.3, and 3.1; Excavation Plan Section 5.0; Pre-Operational Environmental Control Plan Section 5.0.
General Provisions on Air Pollution Control OAC 3745-15-07 (A)	Emission of any substance into the air in such a manner or in such amounts as to endanger the health, safety or welfare of the public, or cause unreasonable injury or damage to property, is hereby found and declared a public nuisance. It shall be unlawful for any person to cause, permit, or maintain any such public nuisance.	Fugitive emissions shall be controlled using BAT. See OAC 3745-17-07(B) and OAC 3745-17-8 (B).	Fugitive emissions shall be controlled using BAT including, as is deemed necessary, the application PolyShell, a plastic and fly ash mixture, or equivalent material, to exposed pit surfaces to control dust and erosion and to minimize water run-on. Water or other dust suppressants will be applied as deemed necessary during operations.	Description of the Operation and Processes Sections 2.1, 2.2, 2.3, 2.7, 3.1, and 3.5; Design Criteria and Assumptions Sections 2.1, 2.2, 2.3, 2.7, 3.1, and 7.3 Excavation Plan Section 5.0; Pre-Operational Environmental Control Plan Section 5.0.

000178

1321

TABLE 3-2a. SUBSTANTIVE PERMITTING REQUIREMENTS FOR AIR CONTAMINANT SOURCES (CONTINUED)

Citation	Substantive Permitting Requirements	Requirements Assessment	Compliance Strategy	Index to Design
Excavated Working Materials - Materials Being Excavated, Transported, Stored, or Blended				
Particulate Matter Standards OAC 3745-17-07(B) and OAC 3745-17-8 (B)	Visible particulate emissions from any fugitive dust source shall not exceed twenty percent opacity as a three-minute average except: a) There shall be no visible particulate emissions from any paved roadway or parking area except for a period of time not to exceed six minutes during any sixty-minute observation period. b) There shall be no visible particulate emissions from any unpaved roadway or parking area except for a period of time not to exceed thirteen minutes during any sixty-minute observation period. c) There shall be no visible particulate emissions from any material storage piles except for a period of time not to exceed thirteen minutes during any sixty-minute observation period.	No person shall cause or permit any fugitive dust source to be operated; or any materials to be handled, transported, or stored; or a building or its appurtenances or a road to be used, without taking or installing reasonably available control measures to prevent fugitive dust from becoming airborne. Such reasonably available control measures shall include, but not limited to, one or more of the following which are appropriate to minimize or eliminate visible particulate emissions of fugitive dust: 1) The use of water or other suitable dust suppression chemicals for the control of fugitive dust from demolition of existing buildings or structures, constructions operations, the grading of roads or clearing land; 2) The periodic application of asphalt, water, or other suitable dust suppression chemicals on dirt or gravel roads and parking lots, and other surfaces which can cause emissions of fugitive dust; suitable coverings; 3) The periodic application of water or other suitable dust suppression chemicals, the installation of storage silos, bins, or other enclosed structures, or the use of canvas or other suitable coverings, for all materials stockpiles and stockpiling operations; 4) The covering, at all times, of open bodied vehicles when transporting materials likely to become airborne; 5) The paving of roadways and the maintaining of roadways in a clean condition. Fugitive sources	Fugitive dust emissions, primarily from excavation, hauling, and processing soils will be mitigated by the use of the following, as appropriate, when visible dust is present: - Water or other dust suppression chemicals - Periodic application of water, or other suitable dust suppressing chemicals as required on all dirt or gravel roads, parking lots, or other surfaces that can cause fugitive emissions. - Maintaining roadways in clean conditions - Providing a structure for the waste feed and treated material storage areas with a passive ventilation system. - Covering at all times open bodied vehicles when transporting materials likely to become airborne. Reasonably available control measures shall include, as is deemed necessary, the following: use of water or other suitable dust suppression chemicals for the control of fugitive dust, providing a structure for the shredding and screening operations, covering of open bodied vehicles when transporting materials likely to become airborne, appropriate maintenance of roadways and work areas to control dust and the visual monitoring for visible dust. For materials stored or exposed for extended periods, more stringent BAT controls will be applied, including application of PolyShell.	Description of the Operation and Processes Sections 2.1, 2.2, 2.3 2.7, 3.1, and 3.5; Design Criteria and Assumptions Sections 2.1, 2.2, 2.3, 2.7, and 3.1; Excavation Plan Section 5.0; Pre-Operational Environmental Control Plan Section 5.0.

TABLE 3-2a. SUBSTANTIVE PERMITTING REQUIREMENTS FOR AIR CONTAMINANT SOURCES (CONTINUED)

Citation	Substantive Permitting Requirements	Requirements Assessment	Compliance Strategy	Index to Design
		Waste Pits		
National Emission standards for Air Pollutants (NESHAP) - 40 CFR 61, Subpart Q - Emissions of Radon From Department of Energy Facilities	No source at a DOE facility shall emit more than 20 pCi/m^2/sec of radon-222 as an average for the entire source, into the air. Source means any building, structure, pile, impoundment or area used for interim storage or disposal that is or contains waste material containing radium in sufficient concentration to emit radon-222 in excess of this standard prior to remedial action.		BAT control for radon emissions from the waste pits will include, but is not limited to, applying water or dust suppressant over the residues, or work practices to minimize handling, disturbances or time exposed.	Description of the Operation and Processes Sections 2.1, 2.2, 2.3, and 3.1; Design Criteria and Assumptions Sections 2.1, 2.2, 2.3, and 3.1; Excavation Plan Section 5.0; Pre-Operational Environmental Control Plan Section 5.0.

TABLE 3-2b. NPDES PERMITTING REQUIREMENTS

Citation	Substantive Permitting Requirements	Requirements Assessment	Compliance Strategy	Index to Design
		Ohio EPA Permit No. 1IO00004*ED		
Ohio EPA NPDES Permit No. 1IO00004*ED	Wastewater discharges associate with the Operable Unit 1 remedial action must be treated to ensure compliance with the terms and conditions of the FEMP NPDES permit. DOE is required to notify Ohio EPA of any activities or changes at the site which have the potential to significantly alter the character of the wastewater streams being discharged under its existing NPDES permit. A NPDES permit modification is required if the discharge is deemed significant enough to cause a change in the character of the wastewater stream. The existing NPDES permit must also be modified to reflect the addition on any new point source discharges of process wastewaters or storm waters. Construction related storm water runoff must be managed in accordance with the requirements of the existing FEMP NPDES permit and Stormwater Pollution Prevention Plan.	Wastewater discharges associated with the Operable Unit 1 remedial action will be treated to ensure compliance with NPDES permit requirements. The existing NPDES permit will be modified and/or renewed to reflect process wastewater discharges and to incorporate the addition of the new industrial storm water outfall to Paddy's Run Creek. Construction related storm water runoff will continue to be managed in accordance with the requirements of the existing FEMP NPDES permit and Stormwater Pollution Prevention Plan.	Wastewater discharges associated with the OU1 remedial action will be treated to ensure compliance with the NPDES permit requirements. IT will provide FDF with the data necessary to modify the existing NPDES permit to reflect process wastewater discharges and any changes to storm water outfalls to Paddy's Run Creek. Construction related storm water run-off will continue to be managed in accordance with the requirements of the existing FEMP NPDES permit and Stormwater Pollution Prevention Plan.	Description of the Operation and Processes Sections 2.8, 2.9, 3.6, and 4.0; Design Criteria and Assumptions Sections 2.8 and 3.2; Excavation Plan Section 6.0; Pre-Operational Environmental Control Plan Sections 2.3, 3.3, 6.0, and 7.1; Operation and Maintenance Plan for Existing Facilities Section 4.5.

TABLE 3-2c. RCRA SUBSTANTIVE PERMITTING REQUIREMENTS

Citation	Substantive Permitting Requirements	Requirements Assessment	Compliance Strategy	Index to Design
		RCRA Substantive Permitting Requirements		
Hazardous Waste Determinations 40 CFR 262.11 (OAC 3745-52-11)	Generators of wastes must determine whether or not these wastes are hazardous in accordance with the requirements of this rule.	Excavation, size reduction, homogenization, blending, and drying of pit wastes will result in the production of a single waste stream that will subsequently be shipped off-site by railcar for disposal at a commercially permit disposal facility. Representative samples from each railcar will be sampled to ensure they meet regulatory and disposal facility waste acceptance criteria. As documented in the Operable Unit 1 FS/PP and ROD, this waste stream does not contain RCRA listed wastes and therefore, samples will be analyzed for RCRA characteristics only in accordance with the requirements of 40 CFR 262.11 and OAC 3745-52-11. If analytical results indicate the waste exhibits RCRA hazardous characteristics, the material will be staged and packaged by the subcontractor for turn-over to Fluor Daniel Fernald, Inc. who in turn will perform any additional characterization, packaging, etc. necessary for shipment and disposal as hazardous waste.	Representative samples of waste material will be collected and analyzed prior to railcar loadout to ensure compliance with the CDF WAC. Details of waste sampling activities will be given in the Sampling and Analysis Plan.	Description of the Operation and Processes Section 4.0; Design Criteria and Assumptions Section 3.3
Preparing and Transporting Hazardous Waste Off-site. 40 CFR 262.20 through 262.33 and 40 CFR 263.20 (OAC 3745-52-20 through 33 and OAC 3745-52-40 and OAC 3745-52-42)	Any generator who transports hazardous waste for off-site treatment, storage, or disposal must originate and follow-up the manifest for off-site shipments. Pre-transporting requirements include appropriate packaging, labeling, marking, and placarding.	If analytical results indicate the waste exhibits RCRA hazardous characteristics, the material will be staged and packaged by the subcontractor for turn-over to Fluor Daniel Fernald, Inc. who in turn will perform any additional characterization, packaging, etc. necessary for shipment to a permitted commercial disposal facility for treatment and disposal as hazardous waste in accordance with the provisions of these regulations.	Hazardous waste, if encountered, will be turned over to FDF for handling and disposition.	Description of the Operation and Processes Section 4.0; Design Criteria and Assumptions Section 3.3; Excavation Plan 5.0.

000182

1321

TABLE 3-2c. RCRA SUBSTANTIVE PERMITTING REQUIREMENTS (CONTINUED)

Citation	Substantive Permitting Requirements	Requirements Assessment	Compliance Strategy	Index to Design
		RCRA Substantive Permitting Requirements		
Closure 40 CFR 264, Subpart G (OAC 3745-55-11 through 16)	Owner and/or operators must close facilities in a manner that: • Minimizes the need for further maintenance • Minimizes post-closure escape of hazardous constituents • Complies with specific unit type closure requirements	Hazardous waste management units located within the Operable Unit 1 boundary will be closed in accordance with the substantive provisions of these requirements during the Operable Unit 1 remedial process. As documented in the Director's Final Findings and Orders between DOE and Ohio EPA, demonstration of compliance with substantive closure and post-closure requirements for hazardous waste management units will be documented in the various remedial design and remedial action documents developed for this project.	Hazardous waste management units located within the OU1 boundary will be closed in accordance with the substantive provisions of these requirements during the OU1 remedial process. As documented in the Director's Final Findings and Orders between DOE and Ohio EPA, demonstration of compliance with substantive closure and post-closure requirements for hazardous waste management units will be documented in the various remedial design and remedial action documents developed for this project	Design Criteria and Assumptions Section 3.3
Post-Closure 40 CFR 264 Subpart G 40 CFR 264.117 and 40 CFR 264.119 (OAC 3745-55-17 and OAC 3745-55-19)	Post-closure care and use of property for a period as necessary to protect human health and the environment including: • Access controls • Monitoring Post-closure notices must include deed notation/use restriction.	Post-closure care will be provided in accordance with the substantive provisions of these requirements during the Operable Unit 1 remedial process. As documented in the Director's Final Findings and Orders between DOE and Ohio EPA, demonstration of compliance with substantive closure and post-closure requirements for hazardous waste management units will be documented in the various remedial design and remedial action documents developed for this project.	Post-closure care will be provided in accordance with the substantive provisions of these requirements during the OU1 remedial process. As documented in the Director's Final Findings and Orders between DOE and the Ohio EPA, demonstration of compliance with substantive closure and post-closure requirements for hazardous waste management units will be documented in the various remedial design and remedial action documents developed for this project.	Design Criteria and Assumptions Section 3.3

TABLE 3-2c. RCRA SUBSTANTIVE PERMITTING REQUIREMENTS (CONTINUED)

Citation	Substantive Permitting Requirements	Requirements Assessment	Compliance Strategy	Index to Design
		RCRA Substantive Permitting Requirements		
Waste Piles OAC 3745-56-51, 54, and 58	These requirements specify design and operating requirements, monitoring, and inspection, closure and post-closure care. Specific substantive requirements include: • Run-on/run-off control systems must be designed and installed to prevent flow onto or runoff from the active pile during peak flows from a 25-year, 24-hour storm event. • Collection and hold facilities associated with run-on/run-off control systems must be emptied after storms. • Piles must be covered or otherwise managed to prevent wind dispersion. • Waste piles must be inspected weekly and after storms to ensure the integrity of run-on and run-off controls. • At closure, owners must remove or decontaminate all waste residues, contaminated system components, contaminated subsoils and structures, and equipment contaminated with waste and leachate, and manage as hazardous waste.	Waste piles generated during the course of the project will be managed in accordance with the substantive provisions of these requirements. Upon completion of remedial activities, the processing facility will be remediated to remove all processing facilities and residual contamination consistent with established remedial levels.	Outdoor stockpiles will be utilized during the pre-operational phase of the project. Stockpile Run-on/run-off controls will be designed and installed in compliance with the requirements of the FDF Stormwater Pollution Prevention Plan (SWPPP). No outdoor waste stockpiles, outside of the waste pit area, are anticipated during the operation of the facility. During facility operation, waste stockpiles will be located inside the facility buildings. Buildings will have roofs, partial side walls, perimeter curbs, floor sumps, and areas sloped to manage drainage. These building features will control runon/runoff for the indoor stockpiles. Stockpile run-on/run-off collection and hold facilities will be managed in compliance with the requirements of the SWPPP. Indoor stockpiles will managed to prevent wind dispersion using building structures with roof and partial side walls. Outdoor stockpiles, if any, will be managed to prevent wind dispersion using applicable covers or by application of dust suppressants. Routine inspections of OU1 Stockpiles will be performed at least weekly and documented throughout the OU1 remedial activities. Stockpiles inside the facility buildings will be visually monitored by the personnel working in the buildings and/or remotely by video camera. At closure, the facility will be decontaminated and dismantled per the D&D Implementation Plan in accordance with the Director's Final Findings and Orders between DOE and the Ohio EPA.	Description of the Operation and Processes Sections 2.1, 2.2, 2.3, and 2.8; Design Criteria and Assumptions Sections 2.1, 2.2, 2.3, 2.8, 3.2, and 3.3; Excavation Plan Section 6.0; Pre-Operational Environmental Plan Sections 2.3, 3.3, 6.0, and 7.1; Operational and maintenance Plan for Existing Facilities Section 4.5; D&D Implementation Plan.

TABLE 3-2d. CWA SECTION 404 AND 401 SUBSTANTIVE WETLAND PERMITTING REQUIREMENTS

Citation	Substantive Permitting Requirements	Requirements Assessment	Compliance Strategy	Index to Design
Nationwide Permit 26 - Substantive Permitting Requirements				
Nationwide Permits 33 CFR Part 330, Appendix A	Discharges of dredged and fill material associated with the Operable Unit 1 remedial action shall not exceed 10 acres or more of total disturbance.	Discharges of dredged or fill material associated with the Operable Unit 1 remedial action total approximately 4.96 acres.	N/A	N/A
Nationwide Permits 33 CFR Part 330, Appendix A	No activity may cause more than a minimal adverse effect on navigation.	Discharges will be conducted within isolated and headwater wetlands and therefore, will have no adverse impacts on navigation.	N/A	N/A
Nationwide Permits 33 CFR Part 330, Appendix A	Any structure or fill authorized shall be properly maintained, including maintenance to ensure public safety.	Fill material will be maintained and stabilized upon completion of remedial activities. Public access to the Operable Unit 1 area of the site is restricted to site personnel, via the existing site security system.	N/A	N/A
Nationwide Permits 33 CFR Part 330, Appendix A	Appropriate erosion control and siltation controls must be used and maintained in effective operating condition during construction, and all exposed soil or other fills must be permanently stabilized at the earliest practicable date.	Appropriate erosion control and siltation devices will be installed and maintained to minimize solids loadings to wetlands and Paddys Run. Erosion and siltation control devices will be design in accordance with the applicable requirements of USDA's Water Management and Sedimentation Control Manual for Urbanizing Areas and the provisions of the current FEMP Stormwater Pollution Prevention Plan.	Appropriate erosion control and siltation devices will be installed per the provisions of the current FEMP Stormwater Pollution Prevention Plan and ODNR Rainwater and Land Development guidance.	Description of the Operation and Processes Sections 2.1, 2.2, 2.8, and 3.1; Design Criteria and Assumptions Sections 2.1, 2.2, 3.2, 3.3, and 3.4; Excavation Plan Section 6.0; Pre-Operational Environmental Control Plan Sections 2.3, 3.3, 6.0, and 7.1; Operation and maintenance Plan for Existing Facilities Section 4.5.
Nationwide Permits 33 CFR Part 330, Appendix A	No activity may substantially disrupt the movement of those species of aquatic life indigenous to the water body, including those species which normally migrate through the area, unless the activity's primary purpose is to impound water.	Discharges of dredge and fill material will be conducted with headwater and isolated wetland systems and therefore, will not substantially disrupt the movement of any indigenous aquatic species.	N/A	N/A
Nationwide Permits 33 CFR Part 330, Appendix A	Heavy equipment working in wetlands must be placed on mats or other measures must be taken to minimize soil disturbance.	Appropriate measures will be taken to ensure impacts from heavy equipment operating in wetlands outside of the subcontractor's work area will be avoided or minimized to the maximum extent practicable.	Mats or other appropriate measures will be utilized to minimize soil disturbance due to heavy equipment operation in wetlands areas.	Excavation Plan Sections 4.4 and 5.0.

TABLE 3-2d. CWA SECTION 404 AND 401 SUBSTANTIVE WETLAND PERMITTING REQUIREMENTS (CONTINUED)

Citation	Substantive Permitting Requirements	Requirements Assessment	Compliance Strategy	Index to Design
Nationwide Permit 26 - Substantive Permitting Requirements				
Nationwide Permits 33 CFR Part 330, Appendix A	No activity is authorized under any Nationwide Permit which is likely to jeopardize the continued existence of a threatened or endangered species or a species proposed for such designation, as identified in the Federal Endangered Species Act, or which is likely to destroy or adversely modify the critical habitat of such species.	No known federally listed or proposed threatened or endangered species will be impacted by dredge and fill activities conducted in support of the Operable Unit 1 remedial action.	N/A	N/A
Nationwide Permits 33 CFR Part 330, Appendix A	No activity which may adversely affect historic properties listed, or eligible for listing, in the National Register of Historic properties is authorized.	No known listed or potential eligible historic properties will be impacted by the Operable Unit 1 remedial action.	N/A	N/A
Nationwide Permits 33 CFR Part 330, Appendix A	A wetland delineation is required to define the areal extent of impacts to wetland areas. Wetland delineations must be prepared in accordance with the current method required by the ACOE.	A site-wide jurisdictional wetland delineation was conducted using the ACOE 1987 Wetland Delineation manual and was subsequently approved by the ACOE in 1993. This delineation has served as the basis for defining wetland impacts associated with remedial activities at the FEMP site.	N/A	N/A
Nationwide Permits 33 CFR Part 330, Appendix A	No discharge of dredged or fill material may occur in the proximity of a public water supply intake except where the discharge is for repair of the public water supply intake structures or adjacent bank stabilization.	No known public water supply intake structures existing within a 1000 foot radius of proposed Operable Unit 1 discharges.	N/A	N/A
Nationwide Permits 33 CFR Part 330, Appendix A	No discharge of dredged or fill material may consist of unsuitable material (e.g. trash, debris, car bodies, etc.) and material discharged must be free from toxic pollutants in toxic amount (see section 307 of the Clean Water Act).	Fill material associated with Operable Unit 1 fill activities will consist of suitable material. Clean backfill will be used during stabilization of the Operable Unit 1 area upon completion of remedial activities.	Imported construction fill material, if required, will be obtained from FDF approved sources.	Excavation Plan Sections 4.11; Site Preparation Package Section 3.2.
Nationwide Permits 33 CFR Part 330, Appendix A	Discharges of dredged or fill material into waters of the United States must be minimized or avoided to the maximum extent practicable at the project site. A compensatory mitigation plan defining the manner in which adverse impacts will be compensated for may be required.	Although DOE has avoided and minimized impacts to wetlands and waters of the United States through the remedial design process, approximately 4.96 acres of unavoidable adverse wetland impacts will be associated with the Operable Unit 1 remedial action. Impacts to these areas will be mitigated at a 1 to 1.5 acre ration in accordance with the Site-wide Wetland Mitigation Plan currently being prepared under the Operable Unit 5 Remedial Design process.	Approximately 4.96 acres of unavoidable adverse wetland impacts will be associated with the OU1 remedial action. Impacts to these areas will be mitigated at a 1 to 1.5 acre ratio in accordance with the Site-wide Wetland Mitigation Plan currently being prepared under the OU5 Remedial Design process.	N/A

000186

1321

TABLE 3-2d. CWA SECTION 404 AND 401 SUBSTANTIVE WETLAND PERMITTING REQUIREMENTS (CONTINUED)

Citation	Substantive Permitting Requirements	Requirements Assessment	Compliance Strategy	Index to Design
Nationwide Permit 26 - Substantive Permitting Requirements				
Nationwide Permits 33 CFR Part 330, Appendix A	To the maximum extent practicable, discharges must not permanently restrict or impede the passage of normal or expected high flows or cause the relocation of waters unless the primary purpose of the fill is to impound waters.	Fluor Daniel Fernald, Inc. has determined that discharges associated with the Operable Unit 1 remedial action will not adversely affect normal or anticipated high flows within those drainage basins which are contained within the Operable Unit 1 boundary.	N/A	N/A
Nationwide Permits 33 CFR Part 330, Appendix A	If the discharge creates an impoundment of water, adverse impact on the aquatic system caused by the accelerated passage of water and/or the restriction of its flow shall be minimized to the maximum extent practicable.	Fluor Daniel Fernald, Inc. has determined that discharges of dredged or fill material associated with the Operable Unit 1 remedial action will not result in the impoundment of water within wetland areas located within the Operable Unit 1 boundary.	N/A	N/A
Nationwide Permits 33 CFR Part 330, Appendix A	Discharges into breeding areas for migratory waterfowl must be avoided to the maximum extent practicable.	Fluor Daniel Fernald, Inc. has determined that proposed discharges of dredge and fill material will not occur with migratory waterfowl breeding areas.	N/A	N/A
Nationwide Permits 33 CFR Part 330, Appendix A	Any temporary fills must be removed in their entirety and the affected areas returned to their preexisting elevation.	Temporary fills will be removed upon completion of remedial activities and the Operable Unit 1 will be stabilized in accordance with the requirements of the grading plan prepared as part of this design package.	N/A	N/A
Section 401 State Water Quality Certification - Substantive Permitting Requirements				
Section 401 Water Quality Certifications OAC 3745-32	Discharges of dredged or fill material are limited to a total disturbance of five (5) acres or less.	While Nationwide Permit 26 allows for a maximum disturbance of 10 acres, Ohio EPA has restricted the total allowable acreage authorized under the Nationwide Permit to 5 acres under its corresponding Section 401 State Water Quality Certification. The Operable Unit 1 remedial action will result in a total impact of 4.96 acres and therefore, this impact is in compliance with this substantive requirement.	While Nationwide Permit 26 allows for a maximum disturbance of 10 acres, Ohio EPA has restricted the total allowable acreage authorized under the Nationwide Permit to 5 acres under its corresponding Section 401 State Water Quality Certification. The OU1 remedial action will result in a total impact of 4.96 acres and therefore, this impact is in compliance with this substantive requirement.	Description of the Operation and Processes Sections 2.1, 2.2, 2.8, and 3.1; Design Criteria and Assumptions Sections 2.1, 3.2, 3.3, and 3.4; Excavation Plan Sections 5.0 and 6.0
	Discharges of dredged or fill material are precluded from occurring in special aquatic sites such as bogs and fens.	The wetland systems located within the Operable Unit 1 boundary do not meet the technical definition of bogs or fens as established in the 401 State Water Quality Certification.	N/A	N/A

Table 4-1

On-site Disposal Facility Waste Acceptance Criteria[a]

Constituent of Concern	Soil[b]		Debris[c]
	OU2	OU5[d]	OU3
Radionuclides			
Neptunium-237	NA[e]	3.12×10^{9} pCi/g	NA[e]
Strontium-90	NA[e]	5.67×10^{10} pCi/g	NA[e]
Technetium-99	NA[e]	29.1 pCi/g	105 g
Uranium-238	346 pCi/g	NA[e]	NA[e]
Total Uranium	1,303 mg/kg	1,030 mg/kg	NA[e]
Inorganics			
Boron	NA[e]	1.04×10^{3} mg/kg	NA[e]
Mercury	NA[e]	5.66×10^{4} mg/kg	NA[e]
Organics			
Bromodichloromethane	NA[e]	9.03×10^{-1} mg/kg	NA[e]
Carbazole	NA[e]	7.27×10^{4} mg/kg	NA[e]
Alpha-chlordane	NA[e]	2.89 mg/kg	NA[e]
Bis(2-chloroisopropyl)ether	NA[e]	2.44×10^{-2} mg/kg	NA[e]
Chloroethane	NA[e]	3.92×10^{5} mg/kg	NA[e]
1,1-Dichloroethene[f]	NA[e]	11.4 mg/kg	NA[e]
1,2-Dichloroethene[f]	NA[e]	11.4 mg/kg	NA[e]
4-Nitroaniline	NA[e]	4.42×10^{-2} mg/kg	NA[e]
Tetrachloroethene[f]	NA[e]	128 mg/kg	NA[e]
Toxaphene[f]	NA[e]	1.06×10^{5} mg/kg	NA[e]
Trichloroethene[f]	NA[e]	128 mg/kg	NA[e]
Vinyl chloride[f]	NA[e]	1.51 mg/kg	NA[e]

[a] Based on OU2 ROD, OU3 ROD, and OU5 ROD.
[b] Maximum concentration
[c] Maximum total mass
[d] Constituents which have established maximums which serve as Waste Acceptance Criteria; other compounds which will not exceed designated Great Miami Aquifer action levels within 1,000-year performance period, regardless of starting concentration in the OSDF, are not listed.
[e] Not applicable.
[f] RCRA-based constituent of concern

Table 4-2

CDF Radiological Acceptance Criteria

Isotope	MAWC, pCi/g
Cesium-137	560[a]
Neptunium-237	2,000[b]
Plutonium-238	1,000
Plutonium-239	1,000
Plutonium-240	1,000
Potassium-40	1,000
Radium-226	2,000[a]
Radium-228 (5 years)	670
Ruthenium-106	19,000[a]
Strontium-90	20,000[a]
Technetium-99	100,000
Thorium-230	15,000
Thorium-232	680[a]
Uranium-234	37,000
Uranium-235	770
Uranium-236	36,000
Uranium-238	28,000[b]
Uranium-Depleted	110,000[b,c]

[a] Decay products are assumed to be present in concentrations equal to parent.

[b] Short lived decay products of U-239 (Th-234 and Pa-234) and of Np-237 (Pa-233) are assumed to be present in concentrations equal to the parent.

[c] The PCDF has agreed that initial waste acceptance for the depleted uranium portion of the materials can be based upon the above-noted all-inclusive limit for depleted uranium instead of considering the individual contributions of all uranium isotopes.

Table 5-1

DOE Orders

CODE	DESCRIPTION OF REQUIREMENT
DOE 10 CFR PART 707	EMPLOYEE EDUCATION AND TRAINING
DOE 1540.2	HAZARDOUS MATERIAL PACKAGING FOR TRANSPORTATION ADMINISTRATIVE PROCEDURES
DOE 5000.3B	ABNORMAL EVENT NOTIFICATION
DOE 5400.5	RADIATION PROTECTION OF THE PUBLIC AND THE ENVIRONMENT
DOE 5480.1	RADIATION PROTECTION FOR OCCUPATIONAL WORKERS
DOE 5480.2	SAFETY REQUIREMENTS FOR THE PACKAGING AND TRANSPORTATION OF HAZARDOUS MATERIALS
DOE 5480.23	HAZARD CLASSIFICATIONS
DOE ORDER 232.1	OCCURRENCE REPORTING AND PROCESSING OF OPERATIONS INFORMATION
DOE ORDER 420.1	FIRE PROTECTION FOR RELOCATABLE STRUCTURES
DOE ORDER 425.1	READINESS TO OPERATE
DOE ORDER 5400.5	RADIATION PROTECTION OF THE PUBLIC AND THE ENVIRONMENT
DOE ORDER 5480.19	CONDUCT OF OPERATIONS REQUIREMENTS (CONOPS)
DOE ORDER 5480.19	CONDUCT OF OPERATIONS REQUIREMENTS FOR DOE FACILITIES
DOE ORDER 550.3A	PLANNING AND PREPAREDNESS FOR OPERATIONAL EMERGENCIES
DOE ORDER 5500.1B	EMERGENCY MANAGEMENT SYSTEM
DOE ORDER 5700.6C	REGULATORY REQUIREMENTS
DOE ORDER 5820.2a	WASTE SAMPLE LABORATORY MANAGEMENT
DOE STD 1088-95	FIRE PROTECTION FOR RELOCATABLE STRUCTURES
DOE STD 1088-95	FIRE PROTECTION FOR RELOCATABLE STRUCTURES
DOE-5480.23	SAFETY ASSESSMENT DOCUMENT
DOE-EH-0256T	RADIOLOGICAL CONTROL MANUAL
DOE-EM-STD-5502	REQUIREMENTS OF "OTHER INDUSTRIAL FACILITY"
DOE-EM-STD-5502-94	HAZARD BASELINE DOCUMENTATION
DOE-EM-STD-5502-94	HAZARD BASELINE DOCUMENTATION
DOE-STD-1027-92	HAZARD CATEGORIZATION AND ACCIDENT ANALYSIS TECHNIQUES COMPLIANCE WITH DOE ORDER 5480.23
DOE-STD-3005-xx	EVALUATION GUIDELINES FOR ACCIDENT ANALYSIS OF SAFETY STRUCTURES, SYSTEMS AND COMPONENTS
DOE-STD-3009-93	PREPARATION GUIDE FOR US DOE NONREACTOR NUCLEAR FACILITY SAFETY ANALYSIS REPORT
DOE/EH-0256T	RADIOLOGICAL CONTROL MANUAL APRIL 1994
DOE/EH-0266	ENVIRONMENTAL HEALTH AND SAFETY BULLETIN
DOE/EH-0266	SUSPECT/COUNTERFEIT PARTS
DOE/EM-0142P	DECOMMISSIONING HANDBOOK, CHAPTER 9, MARCH 1994

Table 5-2
Engineering Standards

(Page 1 of 4)

CODE	DESCRIPTION OF REQUIREMENT
10 CFR 830.120	REGULATORY REQUIREMENTS
10 CFR 830.120	DOE NUCLEAR SAFETY REQUIREMENTS
29 CFR 110.155	ALARM SYSTEMS
29 CFR 1910	PROJECT SHALL BE PERFORMED IN ACCORDANCE OSHA
29 CFR 1910 SUBPART D	LADDERS
29 CFR 1910 SUBPART D	SCAFFOLDING
29 CFR 1910.119	CHART SHOWING POTENTIALLY RELEASABLE INVENTORY
29 CFR 1910.120	HAZARDOUS WASTE OPERATIONS
29 CFR 1910.120 (h)	RADIOLOGICAL MONITORING
29 CFR 1926	SAFETY AND HEALTH STANDARDS FOR CONSTRUCTION
29 CFR 1926 SUBPART L	SCAFFOLDING
29 CFR 1926 SUBPART P	TRENCHING AND EXCAVATIONS
29 CFR 1926 SUBPART Z	TOXIC AND HAZARDOUS SUBSTANCES
29 CFR 1926 SUBPART Z	REGULATED CARCINOGENS
29 CFR 1926.501	FALL PROTECTION FOR 6 FT AND HIGHER
29 CFR PART 1926	OSHA TRENCHING AND EXCAVATION
33 CFR 330	HEADWATERS AND ISOLATED WATER DISCHARGES
40 CFR 122 THROUGH 136	STORM WATER DISCHARGE
40 CFR 122.42, (1) (I) AND (2) (I) & (ii)	CWA TOXIC NOTIFICATION LEVELS NOT TO BE EXCEEDED CWA SECTION 307
40 CFR 192 SUBPART A	STANDARDS FOR THE CONTROL OF RESIDUAL RADIOACTIVE MATERIALS FROM INACTIVE URANIUM PROCESSING SITES
40 CFR 264	RCRA PERMIT PROGRAM
40 CFR 265	INTERIM STATUS STANDARDS OF HAZARDOUS WASTE TREATMENT
40 CFR 270	RCRA PERMIT PROGRAM
40 CFR 302 APPENDIX B	CHART SHOWING POTENTIALLY RELEASABLE INVENTORY
40 CFR 302 TABLE	CHART SHOWING POTENTIALLY RELEASABLE INVENTORY
40 CFR 302.4 LEVELS	CHART SHOWING POTENTIALLY RELEASABLE INVENTORY
40 CFR 355	CHART SHOWING POTENTIALLY RELEASABLE INVENTORY
40 CFR 60	STACK SAMPLING
40 CFR 60 APPENDIX A	STACK PERFORMANCE TESTING
40 CFR 61 APPENDIX B	STACK PERFORMANCE TESTING
40 CFR 61 SUBPART H	RADIOLOGICAL AIR PERMITTING
40 CFR 61, SUBPART H	RADIONUCLIDE EMISSIONS
40 CFR 61.92, NESHAP H	ISOKINETIC SAMPLING AND STACK MONITORING
40 CFR 761	PCB's MANUFACTURING, PROCESSING DISTRIBUTING IN COMMERCE AND USE PROHIBITIONS

Table 5-2
Engineering Standards

(Page 2 of 4)

CODE	DESCRIPTION OF REQUIREMENT
40 CFR PART 261	HAZARDOUS WASTE CLASSIFICATION
40 CFR PART 262	HAZARDOUS WASTE CLASSIFICATION
40 CFR PART 300	NATIONAL OIL AND HAZARDOUS SUBSTANCES POLLUTION CONTINGENCY PLAN
40 CFR PART 300.435	OPERATIONS AND MAINTENANCE PLAN
41 CFR 101-141	TRANSPORTATION
42 USC §6924(u)	STATUTORY COMPLIANCE/RCRA CERCLA INTEGRATION
42 USC §6924(v)	STATUTORY COMPLIANCE/RCRA CERCLA INTEGRATION
42 USC §9601	STATUTORY COMPLIANCE/RCRA CERCLA INTEGRATION
42 USC §9604	STATUTORY COMPLIANCE/RCRA CERCLA INTEGRATION
42 USC §9621	STATUTORY COMPLIANCE/RCRA CERCLA INTEGRATION
49 CFR 173	RAILCAR COVER
49 CFR 173.403	LSA-1 FINAL WASTE PRODUCT CRITERIA
49 CFR 173.44	RADIATION LEVELS FOR CLEANING
49 CFR 174.700(f)	RAILCAR COVER
49 CFR 427	RAILCAR COVER
AASHTO	ROAD DESIGN
ABMA	AMERICAN BEARING MANUFACTURERS ASSOC. FOR BEARINGS
ACGIH	CARCINOGENS LISTED PER AMERICAN CONFERENCE OF GOVERNMENTAL INDUSTRIAL HYGIENISTS
ACI 301	FOR STRUCTURAL CONCRETE FOR BUILDINGS
ACI 302	CONCRETE FLOOR AND SLABS
ACI 318	BUILDING CODE REQ. FOR REINFORCED CONCRETE
ACI 347	FOR CONCRETE FORMWORK
AISC	BUILDINGS
AGMA	AMERICAN GEAR MANUFACTURERS ASSOC. FOR GEARS
AMCA	FOR AIR HANDLING EQUIPMENT
ANSI	FOR AIR HANDLING EQUIPMENT
ANSI	FOR PIPE, FITTINGS, VALVES, AND ACCESSORIES
ANSI	FOR PUMPS
ANSI	FOR ELECTRICAL
ANSI A10.13-89	CONSTRUCTION AND DEMOLITION OPERATIONS STEEL ERECTION
ANSI A10.6-90	DEMOLITION OPERATIONS SAFETY REQUIREMENTS
ANSI A10.8-88	CONSTRUCTION AND DEMOLITION OPERATIONS SCAFFOLDING SAFETY REQUIREMENTS

Table 5-2
Engineering Standards

(Page 3 of 4)

CODE	DESCRIPTION OF REQUIREMENT
ANSI A10.9-83	CONSTRUCTION AND DEMOLITION OPERATIONS CONCRETE AND MASONRY WORK SAFETY REQUIREMENTS
ANSI N13.1-1969	STACK SAMPLING
ANSI Z358	SAFETY SHOWERS/EYE WASHES
API	FOR TANKS
ASME	FOR AIR HANDLING EQUIPMENT
ASME	FOR PIPE, FITTINGS, VALVES, AND ACCESSORIES
ASME	FOR TANKS
ASME	FOR PUMPS
ASME/ANSI	DRAWINGS I.A.W. STANDARD Y-14 SERIES
ASNT	FOR PIPE, FITTINGS, VALVES, AND ACCESSORIES
ASTM	FOR AIR HANDLING EQUIPMENT
ASTM	FOR PIPE, FITTINGS, VALVES, AND ACCESSORIES
ASTM	CONCRETE FOUNDATIONS, FLOORS, PADS
ASTM SECTION 4	GEOTECHNICAL SAMPLING I.A.W. SPEC.
CEMA	FOR CONVEYORS AND MATERIAL TRANSFERRING EQUIPMENT
CERCLA SECTION 104	STATUTORY COMPLIANCE/RCRA CERCLA INTEGRATION
CERCLA SECTION 109	STATUTORY COMPLIANCE/RCRA CERCLA INTEGRATION
CERCLA SECTION 113(h)	STATUTORY COMPLIANCE/RCRA CERCLA INTEGRATION
CERCLA SECTION 120(e)	STATUTORY COMPLIANCE/RCRA CERCLA INTEGRATION
CERCLA SECTION 121	STATUTORY COMPLIANCE/RCRA CERCLA INTEGRATION
CERCLA SECTION 310	STATUTORY COMPLIANCE/RCRA CERCLA INTEGRATION
CERCLA SECTION 310(c)	STATUTORY COMPLIANCE/RCRA CERCLA INTEGRATION
CRSI	CONCRETE FOUNDATIONS, FLOORS, PADS
CWA SECTION 401	WETLAND PERMIT PROGRAMS
CWA SECTION 402	STORM WATER DISCHARGE
CWA SECTION 404	WETLAND PERMIT PROGRAMS
EIA/TIA 568B	JACKS TO BE WIRED PER SPEC.
EIA/TIA 569	PATHWAYS AND SPACES PER SPEC.
EJMA	FOR PIPE, FITTINGS, VALVES, AND ACCESSORIES
ERDA	FOR AIR HANDLING EQUIPMENT
HYDRAULIC INST. STD	FOR PUMPS
IEEE	FOR MOTORS
ISA	FOR ELECTRICAL
MSS	FOR PIPE, FITTINGS, VALVES, AND ACCESSORIES
NEC	FOR ELECTRICAL
NEMA	FOR ELECTRICAL

Table 5-2
Engineering Standards

(Page 4 of 4)

CODE	DESCRIPTION OF REQUIREMENT
NESHAP SUBPART H	RADIOLOGICAL SUBSTANTIVE REQUIREMENTS
NETA	FOR ELECTRICAL
NFPA 10	FIRE EXTINGUISHERS
NFPA 101	STAIRS, RAMPS , PLATFORMS PER OSHA & NFPA
NFPA 101-94	LIFE SAFETY CODE
NFPA 241-93	SAFEGUARDING CONSTRUCTION, ALTERATION AND DEMOLITION OPERATIONS
NFPA 30	STORAGE FACILITIES
NFPA 30	THE FLAMMABLE & COMBUSTIBLE LIQUID CODE
NFPA 30	STACKING OF CONTAINERS
NFPA 70	HVAC SYSTEMS
NFPA 80A	TO DETERMINE DISTANCES FIRE AREAS AND BUILDINGS
OAC 3745-17-07(B)	DUST SUPPRESSION REQUIREMENTS
OAC 3745-17-07(B)	BAT IN ACCORDANCE WITH OAC
OAC 3745-17-08 (B)	BEST AVAILABLE TECH. I.A.W. OAC
OAC 3745-17-08(B)	DUST SUPPRESSION REQUIREMENTS
OAC 3745-31	PERMIT TO INSTALL
OAC 3745-31-05	CONTROL EMISSIONS
OAC 3745-32	WATER QUALITY CERTIFICATION PROGRAM
OAC 3745-35	PERMIT TO OPERATE
OAC 3745-50	RCRA PERMITTING REQUIREMENTS
OAC 3745-50-10	HAZARDOUS WASTE MANAGEMENT UNIT
OAC 3745-51093	HAZARDOUS WASTE CLASSIFICATION
OAC 3745-65	HAZARDOUS WASTE FACILITY INTERIM STANDARDS
OBBC	FIRE DETECTION/SUPPRESSION
ODOT	EARTHWORK/SITE CLEARING TO CONFORM TO
OSHA 1910.106 SUBPART H	STORAGE FACILITIES
RCRA SECTION 3004(u)	STATUTORY COMPLIANCE/RCRA CERCLA INTEGRATION
RCRA SECTION 3004(v)	STATUTORY COMPLIANCE/RCRA CERCLA INTEGRATION
RCRA SECTION 3008(h)	STATUTORY COMPLIANCE/RCRA CERCLA INTEGRATION
SMACNA	FOR AIR HANDLING EQUIPMENT
TEMA	FOR HEAT EXCHANGERS
UL	FOR ELECTRICAL
UL 778	MOTOR OPERATED WATER PUMPS

FIGURES

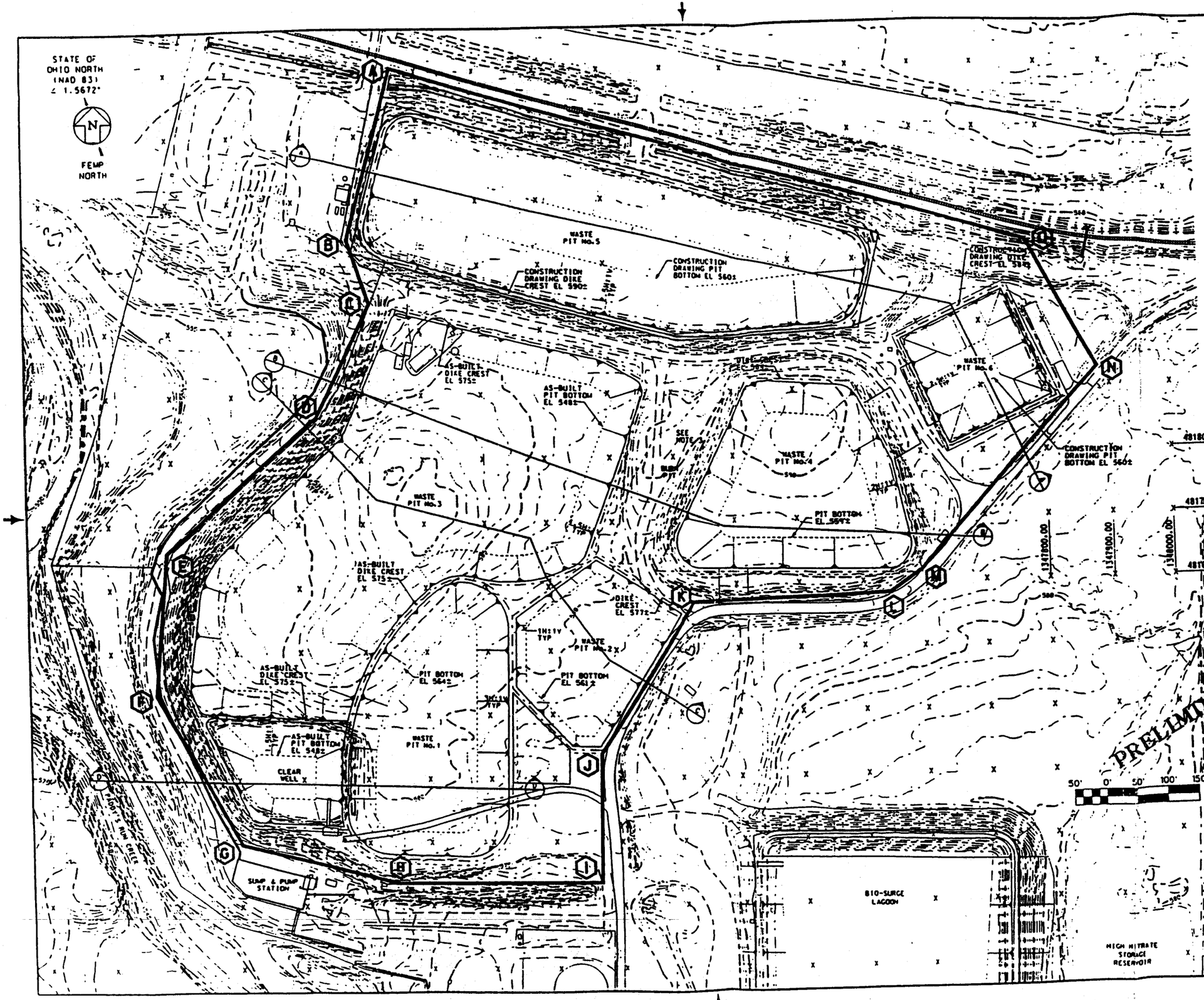

NOTES

1. EXISTING CONDITIONS SHOWN ON THIS DRAWING WERE PREPARED FROM FEMP SITE PROVIDED DATA FROM THE DOCUMENTS LISTED BELOW.

   EXISTING SITE DATA SOURCE FIELD PLANT FILES
   AERIAL PHOTOGRAPHY, 1992
   FEMP CURRENT UTILITY DRAWINGS
   FEMP CONSTRUCTION PROJECT REVIEW DRAWINGS

2. THE GEOMETRIC CONFIGURATIONS, THE LINES REPRESENTING THE BOTTOM ELEVATIONS OF THE WASTE PITS WERE DETERMINED FROM THE BEST AVAILABLE DATA AT THIS TIME. THIS DATA INCLUDES DATA FROM CONSTRUCTION, AS-BUILT, SURVEY, AND FEASIBILITY STUDY DRAWINGS 15/15/90, REV 11, AND FROM THE EXISTING PLANT ENGINEERING FILES.
   THE DIKE CREST SHOWN AROUND THE WASTE PITS REPRESENTS THE DIKE BUILT AT THE TIME OF CONSTRUCTION. MOST OF THE DIKES HAVE BEEN RAISED WITH COARSE MATERIAL OF DIFFERENT THICKNESSES.

3. THE GEOMETRIC CONFIGURATION OF THE BURN PIT WAS NOT DETERMINED FROM THE SITE AS-BUILT SURVEY OF THE BURN PIT AREA. DEPTH AND SLOPES OF THE BURN PIT ARE NOT KNOWN.

SITE RESTORATION COORDINATES

STATE PLANAR (NAD83)

	EASTING	NORTHING
A	1346758.29	482405.43
B	1346684.10	482140.54
C	1346717.51	482042.54
D	1346630.35	481866.02
E	1346390.53	481657.41
F	1346369.85	481434.11
G	1346502.03	481197.09
H	1346745.14	481135.22
I	1347067.68	481135.03
J	1347073.29	481337.83
K	1347226.54	481572.73
L	1347543.67	481581.43
M	1347595.46	481615.46
N	1347880.70	481926.73
O	1347776.00	482126.21

LEGEND

- WASTE PIT AREA BOUNDARY
- PIT OUTLINE COVERED
- PIT OUTLINE DIKE
- PIT OUTLINE BOTTOM
- SLOPE
- MAJOR CONTOUR
- FENCE
- RAILROAD
- PAVED ROAD
- GRAVEL ROAD

FERNALD ENVIRONMENTAL RESTORATION MANAGEMENT CORPORATION
Fernald Environmental Management Project
U.S. DEPARTMENT OF ENERGY

WASTE PIT REMEDIAL ACTION PROJECT
WASTE PITS EXCAVATION LIMIT
SCALE: 1" = 150'-0"

RES #2964
DATE 5/21/96
DRAWN S.J.SMOC

Figure 2-1

NOTE:

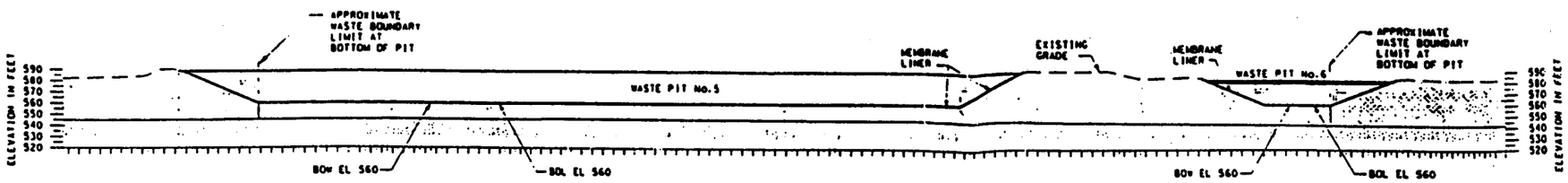

SECTION A
21A-5500-G-00248

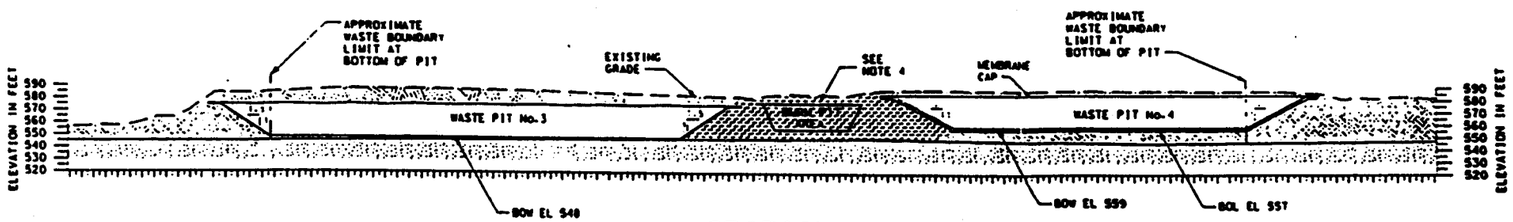

SECTION B
21A-5500-G-00248

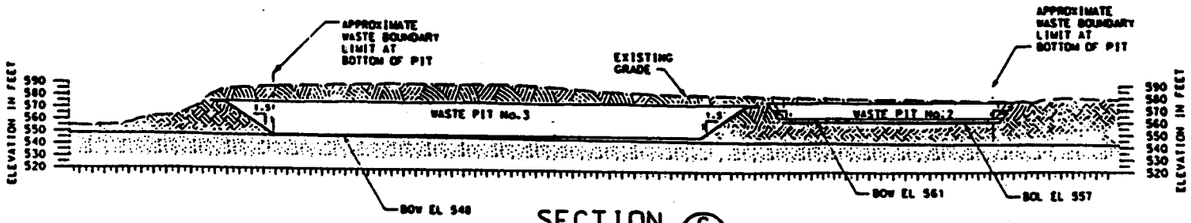

SECTION C
21A-5500-G-00248

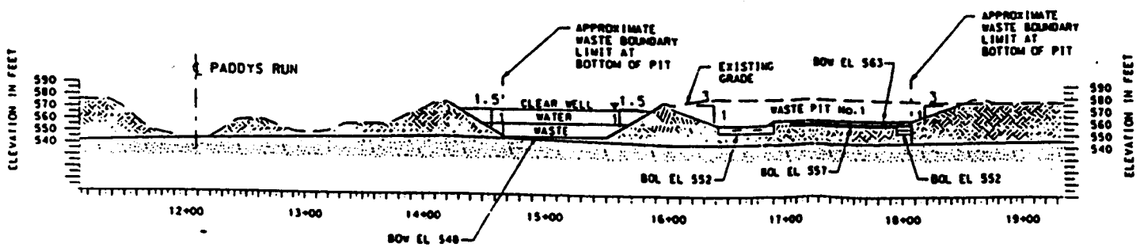

SECTION D
21A-5500-G-00248

PRELIMINARY

LEGEND

BOW	BOTTOM OF WASTE OR TOP OF LINER
BOL	BOTTOM OF LINER
	GLACIAL OVERBURDEN
	CLAY LINER
	FILL SOIL
	SAND AND/OR GRAVEL
	SOIL MIXED WITH WASTE
	WASTE

0' 125'

FERNALD ENVIRONMENTAL RESTORATION MANAGEMENT CORPORATION
Fernald
Environmental Management Project
U.S. DEPARTMENT OF ENERGY

WASTE PIT REMEDIAL ACTION PROJECT
WASTE PIT CROSS SECTIONS
SCALE: 1" = 125'-0"

RES #2964
DATE 5/21/96
DRAWN S.J.SMOCH

Figure 2-2

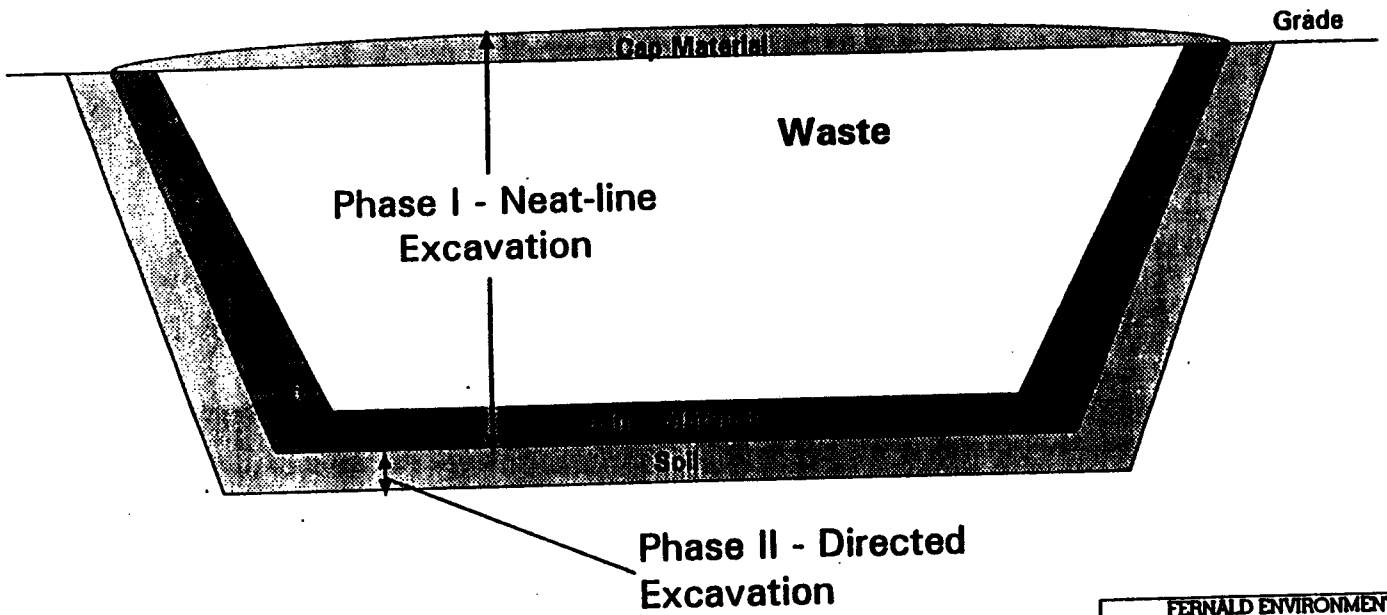

FERNALD ENVIRONMENTAL
RESTORATION MANAGEMENT
CORPORATION

FERNALD
ENVIRONMENTAL MANAGEMENT PROJECT
U.S. DEPARTMENT OF ENERGY

WASTE PIT REMEDIAL ACTION PROJECT

SCHEMATIC OF REPRESENTATIVE
WASTE PIT EXCAVATION PHASES

NES
Date 6/3/96
Drawn D.E. Wilson

Figure 2-3

Appendix A
Waste Characterization
Summary

APPENDIX A

WASTE CHARACTERIZATION SUMMARY

WASTE CHARACTERIZATION SUMMARY

1.0 BACKGROUND

The feed to the dryer will consist of the contents from eight separate waste pits (Pits 1 through 6, the Burn Pit, and Clearwell). These pits contain secondary processing wastes resulting from a uranium processing facility. Consequently, the feed will cover a broad range of characteristics. The majority of feed material is composed of general sump sludge, neutralized raffinate, and magnesium fluoride.

The general sump sludge consists of 1) filtrates from various processing plants, 2) wastewater from the laboratory, and 3) lime. Raffinate from the solvent extraction operation was neutralized and sent to the pits. The magnesium fluoride in the pits was produced by the reduction of uranium tetrafluoride to uranium metal using magnesium metal. Some of the resulting magnesium fluoride slag was reprocessed to recover uranium. The insoluble materials left over after the acid digestion recovery process were filtered out, reslurried, mixed with lime, and pumped to the pits.

Other wastes known to have been deposited in the pits include:

1) Contaminated asbestos materials
2) Contaminated rags, paper, and polyethylene
3) Dust collector bags
4) Scrap salts
5) Uranium and thorium tetrafluoride
6) Contaminated soil, rocks, sand, brick, and ceramics
7) Dust collector residues
8) UO_3 and U_3O_8
9) Miscellaneous sludges
10) Uranium chips and turnings
11) Water softening and treatment sludges
12) Graphite crucibles and molds
13) Ash from burning or incineration (pallets, paper, graphite, oils)
14) Flyash from coal-fired boiler
15) Steel drums

(Note that all dryer feed will be processed to size reduce items so they do not exceed 4 inches in any dimension.)

Samples of the pit wastes have been characterized by several organizations. The data is summarized in this appendix. One important characterization effort was performed by the University of Cincinnati (UC). They classified the wastes based on the Unified Soil Classification System (USCS). Subsequent test work has focused on four major classifications: nonplastic (NP-Type 1), and low-plasticity silt (ML-Type 2), high-plasticity silt (MH-Type 3), and low-plasticity clay (CL-Type 4).

Bench- and pilot-scale drying tests were performed by Parsons using surrogate materials. The surrogates were developed to cover the range of physical characteristics exhibited by the actual wastes. Four surrogates were formulated to first meet the Atterberg limit criteria that would place them in the appropriate USCS group, and also have particle size distributions similar to those of the actual pit wastes. . The pilot-scale drying test were performed in batch and continuous, indirect and direct rotary dryers. The surrogate wastes to be used during acceptance testing are the same as one of the surrogates used during pilot-scale testing (see Tables A and B, Article 3.6).

2.0 PIT WASTE COMPOSITION

In general, the waste pits contain a variety of materials that are not homogeneous, and there is a degree of uncertainty concerning the range of possible pit constituents. There are thought to exist pockets of uranium metal fines from machining operations, which may release heat through pyrophoric reaction in the dryer. Pockets of other reactive materials may, or may not be present, in containers or completely free of containment.

It should also be noted that the sampling techniques used to develop the remedial investigation (RI) database create a certain amount of unpredictable bias. Pit materials that were resistant to hand sampling were often not included. Specific on-site knowledge gained from one of the IT sampling teams indicated that Pit 4 contained significant amounts of asphalt, which were avoided during the sampling. Additionally, certain areas of the pits could not be accessed safely, and were therefore omitted from the characterization.

The following sections present a summary of the pertinent data collected from the RI and the Parsons Design Study. Many of the tables present maximum and minimum values, taken from the RI. Neither the maximums nor the minimum values should be taken as the absolute maximums or minimums for the pits as a whole. The extent of the area to be remediated and the number of samples taken during the characterization do not preclude the possibility of higher concentrations of certain materials in isolated pockets within the various pits. The information is categorized by chemical class or type.

By far the largest percentage of pit waste is relatively inert salts and oxides, which will pass through the dryer unchanged in form.

2.1 Speciated Organics

The concentrations of specific chemicals in the pits are below threshold concentrations that could impact physical operation of the dryer. Table A presents the maximum potential feed rates of the prominent specific organic compounds into the dryer. This data set does not attempt to predict mixing of pit materials or take natural dewatering into account. Of particular concern are the carcinogenic chemicals, (anthene series) and PCBs. This data set is derived from the Parsons OU1 Design Package and formed the basis for their dryer design.

Table A
Potential Feed Rate into Dryer
@ 30 tons/hr

Component	Pit 1	Pit 2	Pit 3	Pit 4	Pit 5	Pit 6	Burn Pit	Clear-well
	lb/hr	lb/hr	lb/hr	lb/hr	lb/hr	lb/hr	lb/hr	lb/hr
4,4 DDT	0.070	0.002	0.000	0.000	0.000	0.000	0.000	0.000
Aroclor 1248	0.439	0.000	0.424	0.139	0.508	0.000	0.000	0.035
Aroclor 1254	0.571	0.000	0.300	0.125	1.017	0.068	0.241	0.077
Benzoic Acid	0.193	0.000	0.432	0.081	0.000	0.000	0.000	0.000
Bis(2-Ethyl hexyl) Phthalate	0.079	0.000	0.097	0.050	0.377	0.097	0.304	0.070
Diethyl phthalate	0.000	0.000	0.380	0.042	0.000	0.000	0.157	0.146
Fluoranthene	0.000	0.856	0.088	0.332	0.000	0.000	0.501	0.324
Phenanthrene	0.105	0.647	0.088	0.295	0.000	0.000	0.472	0.220
Pyrene	0.000	0.435	0.088	0.166	0.000	0.000	0.439	0.146
Tetrachloroethene	0.029	0.000	0.000	0.010	0.000	3.087	0.000	0.000
Tributyl Phosphate	1.097	0.068	0.000	1.328	0.000	0.000	0.000	0.000
2,4,5-Trichlorophenol	0.000	0.000	0.000	0.000	0.000	0.000	0.000	0.794

The data set in Table A is contrasted with the same target organics, plus benzo(a)pyrene from the RI study and CIS data. Table B presents the potential feed rates based on the average concentrations from the RI and when necessary, CIS data sets.

Table B

Average Dryer Feed Rates
of Selected Regulated Organic Compounds
Assuming 30 tons/hr Waste Feed Rate

Component	Pit 1	Pit 2	Pit 3	Pit 4	Pit 5	Pit 6	Burn Pit	Clear well
	lb/hr	lb/hr	lb/hr	lb/hr	lb/hr	lb/hr	lb/hr	lb/hr
4,4 DDT	0.000	0.000	0.000	0.000	0.000	0.000	0.000	0.000
AROCLOR 1248	0.217	0.131	0.074	0.200	0.041	0.000	0.000	0.011
AROCLOR 1254	0.294	0.000	0.062	0.138	0.069	0.012	0.146	0.018
Benzoic Acid	0.046	0.137	0.077	0.044	0.000	0.000	0.000	0.000
Bis(2-Ethyl hexyl) Phthalate	0.017	0.054	0.024	0.042	0.046	0.033	0.126	0.020
Diethyl phthalate	0.000	0.054	0.077	0.021	0.000	0.000	0.042	0.031
Fluoranthene	0.021	4.318	0.025	0.117	0.000	0.000	0.204	0.071

Table B (continued)

Average Dryer Feed Rates of Selected Regulated Organic Compounds Assuming 30 tons/hr Waste Feed Rate

Component	Pit 1	Pit 2	Pit 3	Pit 4	Pit 5	Pit 6	Burn Pit	Clear well
Phenanthrene	0.042	4.262	0.024	0.133	0.000	0.000	0.191	0.000
Pyrene	0.017	3.605	0.024	0.098	0.000	0.000	0.180	0.000
Tetrachloroethene	0.000	0.000	0.000	0.003	0.000	0.868	0.000	0.000
Tributyl Phosphate	0.836	1.346	0.000	3.600	0.000	0.000	0.000	0.000
2,4,5-Trichlorophenol	0.000	0.000	0.000	0.000	0.000	0.000	0.000	0.228
Benzo(a)pyrene	0.000	1.231	0.023	0.044	0.000	0.000	0.058	0.000

The behavior of these organic compounds in the dryer will depend on the physical and chemical properties of the individual species. Some of the relevant chemical properties of these organic compounds are presented in Table C.

Table C
Chemical Properties of the Prominent Organic Compounds

Compound	Melting Point (F)	Boiling Point (F)	Vapor Pressure (mm Hg)	Comments
4,4 DDT	226		1.9×10^{-7} @ 68°F	
AROCLOR 1248		340-375		
AROCLOR 1254		340-375		
Benzoic Acid	251	480		
Bis(2-Ethy hexyl) Phthalate	-58	723		
Diethyl phthalate	-41	568	14 @ 325°F 30 @ 360°F 734 @ 563°F	
Fluoranthene	225	482		
Phenanthrene	212	644		
Pyrene	300	759		
Tetrachloroethene	-9	251	14 @ 68 24 @ 86 45 @ 104	
Tributyl Phosphate	-110	554		decomposes at 554
2,4,5-Trichlorophenol	143	487		

2.2 Total Organic Carbon

Based on the RI, significant concentrations of organic carbon are present in every pit. Table D shows the average, maximum and minimum concentrations of TOC, taken from the RI study finalized in 1994. It should be noted that at least a portion of the graphite known to be present in the pits will be included in the TOC analysis results, due to the conditions under which TOC analysis are carried out. However, there is no data available, at present, to draw conclusions about how much of the TOC shown is actually graphite. The more conservative approach is to assume that the TOC is made up entirely of organic species and other types of organic species, such as asphalt. An exception to this conservative approach will be in the case of the burn pit, where it is logical to assume that a large portion of the TOC is indeed graphite and/or charcoal. The bulk of these species will be non-regulated volatile or semi-volatile organic materials bound to particulate matter in the waste.

Table D
Total Organic Carbon Concentration Summary (percent by weight, dry basis)

	Pit 1	Pit 2	Pit 3	Pit 4	Pit 5	Pit 6	Burn Pit	Clear well
Avg	2.27	11.23	15.23	2.987	1.828	1.411	15.20	5.15
Max	3.36	11.37	17.6	5.365	3.500	3.500	15.20	10.80
Min	0.688	11.08	12.86	0.609	0.261	0.251	15.20	0.300
#	3	2	2	2	10	8	1	7

- refers to the number of determinations

One of the organic compounds known to exist in the pit materials is tributyl phosphate (TBP). It is known that TBP was used in large quantities during the reprocessing of uranium and other fissionable materials at Fernald. Kirk and Othmer, Vol. 9 states that, "in the Purex process, the spent fuel is dissolved in nitric acid and extracted with TBP in 30 volume percent solution in an aliphatic diluent such as kerosene." TBP would react with water in the alkaline pits to form derivative organic compounds. The derivative organic compounds would not be targeted by a standard Appendix IX scan and would only show up in a TOC analysis. While only ppm levels of TBP were found in the pits, the total phosphorus results support the hypothesis that significant quantities of TBP laden waste was disposed of in the pits.

2.3 Oil and Grease

Oil and grease analyses were performed selectively on several of the pits. Oil and grease results should be viewed as minimum values. The analytical method involves the extraction of the sample by a organic solvent, followed by evaporation to dryness and weighing to a final weight. The extraction process is not 100 percent effective on all types of solid waste samples due to limited solubility and the inability of the solvent to strip organic components from some types of waste. Secondly, lighter organics can volatilize during the drying causing a negative bias. Table E presents the summarized data from the OU1 RI/FS study.

	Table E Oil and Grease Concentration Summary (percent by weight, dry basis)							
	Pit 1	Pit 2	Pit 3	Pit 4	Pit 5	Pit 6	Burn Pit	Clear well
Avg	not performed	0.59	0.060	0.492	not performed	0.0030	not performed	0.014
Max	not performed	1.6027	0.151	1.79	not performed	0.0083	not performed	0.029
Min	not performed	0.027	0.012	0.054	not performed	0.0022	not performed	0.005
#		3	4	4		8		7

- refers to the number of determinations

2.4 Organic Nitrogen

Organic nitrogen is present in significant quantities in each of the pits, except Pit 1. Table F presents organic nitrogen data from the RI.

	Table F Organic Nitrogen Concentration Summary (ppm by weight, dry basis)							
	Pit 1	Pit 2	Pit 3	Pit 4	Pit 5	Pit 6	Burn Pit	Clear well
Avg	U	5090	4179	315	266	524	552	500
Max	U	11700	8914	833	626	801	642	909
Min	U	0.1	127	3.2	0	337	461	205
#	1	2	6	4	10	8	2	7

- refers to the number of determinations

2.5 Total Phosphorus

Pits 2 and 3 contain significant levels of phosphorus. One potential source of phosphorus is TBP used in the Purex process to recover uranium. In the pits, TBP should react with water and will be incompatible with caustic materials. In contrast to the high total phosphorus results, the phosphate results are low or undetectable. It is unclear what forms the phosphorus will take in the dryer. At the pH values shown in Table G, no free phosphoric acid should be present in the pits. Calcium, potassium and metal phosphates are stable and would pass through the dryer relatively unaffected. However, the bulk of common organo-phosphorus and inorganic phosphorus compounds, (other than inorganic phosphates) have boiling points less than or equal to the planned dryer shell temperature.

One possibility is that the volatile phosphorus compounds will evolve, react with the moisture and oxygen in the sweep gas to form linear polyphosphoric acids in the process. Kirk and Othmer, states that once formed these acids are "hygroscopic, viscous, oily, gummy and may also consist of a mixture of glassy and crystalline materials." When these acids are dissolved in excess water they degrade to phosphoric acid. It is also conceivable that evolving phosphorus will form P_2O_5 which will condense into submicron particulate. More likely, however, is that evolving phosphorus will form phosphoric acid directly on contact with water vapor.

Partially hydrolyzed tributyl phosphate could form phosphate esters of various types in the pits, which would create corrosive *ortho*-phosphate ions in the dryer. The phosphate ion would form at the shell/material interface and attack the inner surface directly during the drying process.

Table G
Total Phosphorus Concentration Summary (percent by weight, dry basis)

	Pit 1	Pit 2	Pit 3	Pit 4	Pit 5	Pit 6	Burn Pit	Clear well
Avg	.00067	3.80	1.11	.0062	.071	.199	.050	U
Max	.00067	4.37	5.78	.015	.110	.385	.078	U
Min	.00067	3.41	.023	.0002	.042	.057	.021	U
#	1	3	6	4	10	8	2	7
Pit pH (avg.)	not performed	8.04	7.97	6.74	not performed	not performed	8.53	not performed

2.6 Metal Salts and Oxides

No true analytical data is available on specific salts in the pits. The Parsons waste composition was assembled from the data on cations and anions concentrations in each of the pits. Parsons combined anions with cations; however, of these combinations, only a few are actually known to have been discarded to the pits, or would be expected to exist in the reported forms. Magnesium fluoride is known to have been used in the Fernald processes. Calcium hydroxide is known to have been placed in the pits in quantities sufficient to neutralize acids and bring the pH up to acceptable values. It is possible that the uranium in the pits is in the forms suggested by the Parsons data, (U_3O_8 and UO_3). However, the exact form that the bulk of the uranium takes in the pits is, at this time, unknown. The most prevalent salts based on the Parsons data, which were derived from the RI, are shown in Table H. Average and maximum concentrations of metals directly from the RI are shown in bold.

Uranium (IV) fluoride UF_4 is of particular importance because of its potential to react directly with water vapor in the dryer to form hydrofluoric acid (HF). The rate of reaction as a function of temperature of UF_4 is being investigated to ascertain the potential.

	Table H Prominent Salts and Oxides Concentration Summary (approximate percent by weight, dry basis)							
	Pit 1	Pit 2	Pit 3	Pit 4	Pit 5	Pit 6[4]	Burn Pit	Clear well
MgF_2 Total Mg	28.6 **6.1/12.9**	0 **4.72/6.79**	0.38 **3.44/5.17**	0.63 **1.61/3.40**	17.4 **3.20/4.30**	43.23 **2.15/4.19**	0.004 **1.70/2.57**	15.9 **2.08/2.72**
$Ca(OH)_2$[1] Total Ca	33.2 **7.71/19.7**	3.1 **8.34/10.4**	30.6 **12.0/19.0**	24.4 **1.54/3.27**	43.2 **17.8/25.0**	22.81 **7.82/15.7**	43.1 **5.9/8.89**	49.6 **13.8/17.7**
Fe_2O_3 Total Fe	6.04 **0.13/0.26**	19.7 **2.24/3.92**	4.06 **1.62/2.58**	9.89 **0.35/0.74**	3.41 **1.26/2.07**	2.56 **0.82/1.48**	17.9 **2.02/3.12**	5.2 **1.76/2.03**
Al_2O_3 Total Al	4.09 **0.24/0.34**	7.68 **1.60/2.31**	11.8 **1.09/1.74**	4.35 **0.55/1.07**	3.88 **0.85/1.19**	5.83 **1.09/1.98**	4.52 **0.64/0.86**	7.76 **1.63/2.07**
UF_4	2.24	0	0	1.77	0.189	1.58	0.03	0.14
U_xO_x [2]	4.11 **1.70/4.84**	10.58 **0.29/0.58**	0.58 **0.34/0.59**	30.3 **5.18/11.6**	0.346 **0.21/0.37**	2.85 **12.8/27.7**	1.27 **0.20/0.45**	0.26 **0.12/0.27**
Mass accounted for[3].	78.3	41.1	47.4	71.37	68.41	78.86	66.83	78.84
Pit pH	not performed	8.04	7.97	6.74	not performed	not performed	8.53	not performed

Parson's Data is shown as the top number in each cell. RI values for the average and maximum are in bold type.

1 - Calcium hydroxide will likely have reacted to form calcium carbonate, based on the pH value data.
2 - Sum of U_3O_8 and UO_3, based on Parsons data.
3 - The mass accounted for as listed in the table is the sum of the individual percentages listed in the table.
4- An error as to the placement of a decimal point was discovered in the Parsons data which impacts the relative concentrations of each constituent. Corrections are reflected in the table.

The balance of material in the pits is made up of combinations of metal oxides, metal salts, organic nitrogen and organic carbon. The melting points and other physical characteristics of the prevalent metallic compounds are shown in Table I.

Table I Prominent Salts and Oxides Chemical Properties Summary			
Compound	Melting Point (F)	Boiling Point (F)	Specific Notations
MgF_2	2305	4105	

$Ca(OH)_2$	971.6		
$CaCO_3$	1652		decomposes @ 1652
Fe_2O_3		2663	decomposes
Al_2O_3	3664	5396	
U_3O_8		2372	decomposes
UO_3			decomposes

2.7 Radionuclides

Considerable analysis has been performed to quantify the levels of radioactive materials in the pits. Complex blending schemes have been completed to mix highly contaminated waste with less contaminated materials to meet acceptance criteria. Table J lists the more prevalent radioactive compounds found in the pits, and information that may impact the design of the dryer.

Table J

Compound	Range of Melting Points (F)	Range of Boiling Points (F)	Decays by	Half Life	Comments
U-235	354 - 4262	737 - 7898	α	7.1×10^8 yr	some forms decompose at low temperatures
U-238	354 - 4262	737 - 7898	α	4.5×10^9 yr	
U-234	354 - 4262	737 - 7898	α	2.47×10^5 yr	some forms decompose at low temperatures
Tc-99	122 - 1,800	140 - 591	β^-	2.12×10^5 yr	most compounds can volatilize
Cs-137	83.8 - 1,130	up to 2372	e^- β^- γ	30 yr	some forms decompose at low temperatures.
Th-230	397 - 5828	1130 - 7952	α γ e^-	80000 yr	nitrates and halogenated forms decompose at relatively low temperatures, oxide is very chemically stable
Ra-226	1292-2120	1652 and up	α γ e^-	1,620 yr	
Ra-228	1292-2120	1652 and up	β^- e^-	6.7 yr	
Rn-222	-95.8	-79.6	α γ	3.82 days	inert gas

Melting points and boiling points ranges are based on commonly available compounds listed in Lange's Handbook, which could conceivably exist in the pits.

3.0 SIZE DISTRIBUTION

In general, the bulk of the feed is very fine (less than 200 mesh). Note that all feed must be less than 4 inches in any dimension so any debris from the pits will be size reduced prior to being fed to the dryer.

4.0 MOISTURE CONTENT

The moisture contents of the actual pit wastes are reported to vary from 10 percent to over 600 percent (all moisture contents expressed on a dry basis = (lb water/lb dry solids) x 100 percent). However, the pit materials will be processed to provide feed with a specified moisture content ranging from 30 to 200%.

5.0 BULK DENSITY

The solid specific gravities of the feed range from 2.60 to 3.25. Bulk (slurry) densities calculated at the minimum and maximum moisture contents of the feed assuming an average solid specific gravity of 2.9, range from 79 to 126 lb/ft^3.

6.0 PLASTICITY DATA (ATTERBERG LIMITS - ASTM D4318)

The dryer feed will consist of materials ranging from non-plastic to high-plasticity silt based on the Atterberg limit data reported in Table K.

Table K - Average Atterberg Limits - Four Types of Feed

Feed Type	Description	Plastic Limit	Plasticity Index
1	Non--plastic	N/A	N/A
2	Low-plasticity Silt	30	15
3	High-plasticity Silt	55	40
4	Low-plasticity Clay	20	20

7.0 WASTE/SOIL CHARACTERISTICS FOR EXCAVATION AND HANDLING

This section provides a general description of the waste materials found in the OU1 waste pits, primarily in terms of soil material classifications. The data were obtained from the OU1 Remedial Investigation/Feasibility Study (RI/FS) and University of Cincinnati Accelerated Life Testing and Environmental Research (ALTER) testing of materials obtained from small diameter samplers (split-spoon and Shelby Tube) and bulk archived sample material from auger boring and grab sampling. The pits, especially the covered pits, contain debris of various sizes. Various debris were encountered during DEEP wet trenching with a track hoe at various locations at Pits 1, 2, and 3. Debris encountered included large pieces of concrete rubble, coarse gravel, planks of lumber, sheet metal, metal bands, and metal wire.

Waste Pit 1. Based on ALTER and OU1 RI/FS data, in general, Pit 1 waste materials behave like nonplastic silts (ML) (with nonplastic fines) with little cohesion and low dry strength. The moisture contents ranged from about 16 to 40 percent (dry weight basis).

Waste Pit 2. Based on ALTER data and OU1 RI/FS data, in general, Pit 2 waste materials range in behavior from nonplastic silts and sands (silt with sand, sandy silt, silty sand) to highly plastic silts (sandy elastic silt). Some lean clays are also present. Moisture contents range from about 17 percent (lean clay with sand) to 320 percent (nonplastic silt with sand). Moisture content of the sandy elastic silt material ranges from about 70 to 230 percent.

Waste Pit 3. Based on ALTER and OU1 RI/FS data, in general, Pit 3 waste materials range in behavior from low plasticity silts and sands (sandy silt and silty sand) to highly plastic silts (sandy elastic silt, elastic silt with sand). Some lean clays are also present. Moisture contents range from about 35 percent (sandy silt) to 153 percent (elastic silt with sand). Moisture content of the sandy elastic silt material ranges from about 42 to 153 percent.

In-place strength of Pit 3 waste from the DEEP Cone Penetrometer Test (CPT) probes and Standard Penetration Test (SPT) tests indicates very low strengths over much of the pit area (below the cap materials). Low strengths are expected to result in waste collapse at quite low natural slopes, which may present safety concerns and excavation inefficiencies due to flat slopes. Based on the relative values from CPT data and previous data, angles of repose are estimated to range from 10 to 12 degrees prior to dewatering. Laboratory test results to confirm the shear strengths estimated from the CPT probes are not yet available. In addition, existing data also indicate that the moisture content for must of the waste (in situ conditions) is above the liquid limit, indicating the material could behave like a fluid. Dewatering may be necessary in Pit 3 to maintain an open, relatively flat, safe slope.

Waste Pit 4. Based on ALTER data and RI/FS data, in general, Pit 4 waste materials range in behavior from nonplastic silts (silt, silt with sand, and sandy silt) to lean and silty clays (lean clay with sand, sandy lean clay, sandy silty clay). Moisture contents range from about 10 percent (sandy lean clay) to 62 percent (sandy silty clay).

Waste Pit 5. Based on ALTER data, in general, Pit 5 waste material behaves as a high-plasticity elastic silt. The pit also contains some nonplastic silt. In general, the moisture content of the waste material in Pit 5 is the highest of the OU1 waste material tested. Moisture content of the elastic silt material ranges from about 161 to 620 percent. The moisture content of the nonplastic silt material was about 109 to 115 percent.

Based on preliminary DEEP data, waste materials appear to be low density with extremely high moisture contents that do not tend to be free-draining.

Waste Pit 6. Based on ALTER data, in general, Pit 6 waste material behaves as a nonplastic to low plasticity silt (silt, sandy silt, silt with sand, and silty sand). The pit also contains some high plasticity elastic silt. Water content of Pit 6 materials range from about 27 percent (silt with

sand) to 425 percent (nonplastic silt). Based on preliminary DEEP data, waste materials appear to be free draining.

Burn Pit. Based on RI/FS and ALTER data, in general, Burn Pit waste material ranges in behavior from a low plasticity silt (sandy silt) to a silty sand. Some lean clay with sand is also present. Water content of Burn Pit waste materials range from about 25 percent (lean clay with sand) to 43 percent (silty sand).

Clearwell. Based on ALTER data, in general, the waste in the Clearwell contains materials behaving as high-plasticity silts (sandy elastic silt, elastic silt with sand), silty sand, and sandy lean clay. The water contents of these materials range from about 35 percent (sandy lean clay) to 72 percent (sandy elastic silt).

DRAFT

Waste Pits Remedial Action Project
(WPRAP)
Process Flow Diagram(s) w/Mass & Energy Balance

***

PREPARED
for
Fluor Daniel Fernald, Inc.
Fernald, Ohio

FDF Subcontract No. 98SC000001

***

PREPARED
by
IT Corporation
2790 Mosside Boulevard
Monroeville, PA 15146-2790

IT Project No. 773481

***

Revision B
Issue Date: February 13, 1998

Record of Issue/Revisions

Date	Rev. No.	Description of Issue/Revision
1-9-98	A	Original Issue of Draft
2-13-98	B	Draft Issue for EPA Review

Drawing List

Drawing No.	Rev. No.	Description
D-10-10-001	B	Area 10 - Dryer Feed System PFD
D-15-10-001	B	Area 15 - Material Handling PFD
D-20-10-001	B	Area 20 - Indirect Dryer PFD
D-35-10-001	B	Area 35 - Railcar Loading/Lidding PFD
D-50-10-001	B	Area 50 - Air Pollution Control System PFD
D-60-10-001	B	Area 60 - Process Blowdown Pretreatment System PFD
D-65-10-001	B	Area 65 - Wastewater Treatment System (WTS) PFD
D-70-10-001	B	Area 70 - Utilities PFD
D-90-10-001	B	Area 90 - Site Water Balance PFD

Table List

Table No.	Rev. No.	Description
1	B	Site Water Balance for PFD D-90-10-001

DRAWING NUMBER D-10-10-001

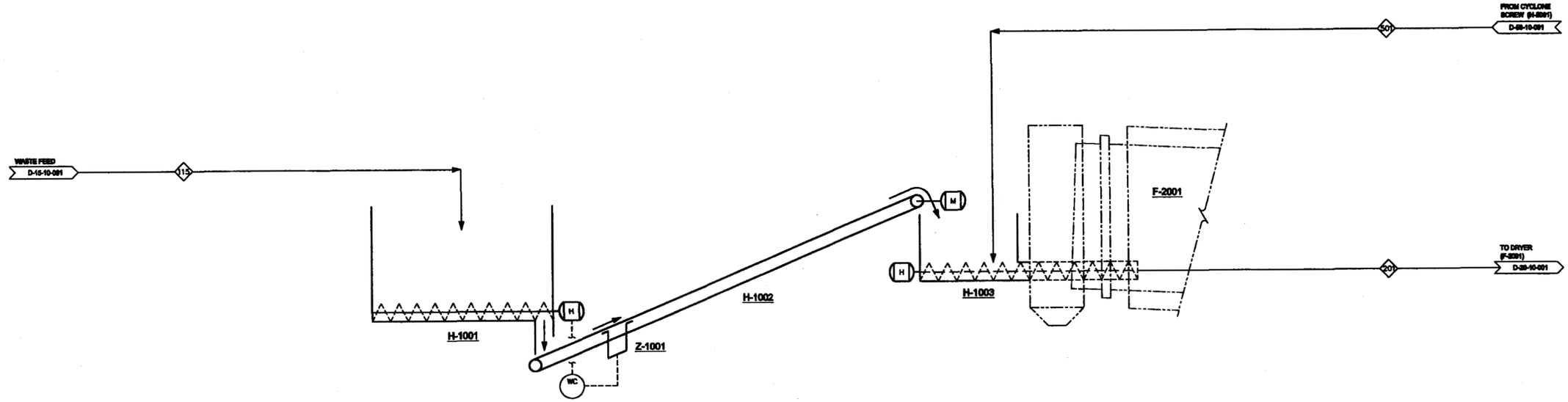

DRAFT

H-1001	MASS FLOW SCREW FEEDER
Z-1001	BELT SCALE
H-1002	BELT FEED CONVEYOR
H-1003	DRYER FEED SCREW
F-2001	ROTARY DRYER

000215

COMPONENT \ STREAM NO.		115	201	201																	
		SOLIDS TO DRYER	CONDITIONED FEED	CYCLONE SOLIDS																	
AVERAGE CONDITION																					
H_2O	LB/HR	18,320	18,320																		
SOLIDS	LB/HR	26,108	26,967	861																	
ORGANICS	LB/HR	3,133	3,133																		
TOTAL MASS FLOW	LB/HR	47,559	48,420	861																	
VOLUMETRIC FLOW	GPM																				
TEMPERATURE	°F	60	60	705																	
PRESSURE	PSIG	ATM	ATM																		
DENSITY	LB/FT³	100	100																		
MAXIMUM CONDITION																					
TOTAL MASS FLOW	LB/HR	51,200	51,200	1,151																	
VOLUMETRIC FLOW	GPM																				
TEMPERATURE	°F			725																	
PRESSURE	PSIG																				

1. SLUDGE LANCE IS A FUTURE OPTION IF REQUIRED.

REV	DATE	BY	CHK'D	APRV'D	DESCRIPTION
B	3/10/98	JWH	DDP	CP	ISSUED FOR EPA REVIEW
A	12/31/97	JWH	DDP	CP	ISSUED FOR DRAFT PLANT FACILITIES ENG. PKG.

FLUOR DANIEL FERNALD

WASTE PITS REMEDIAL ACTION PROJECT (WPRAP)
FERNALD, OHIO
FDF SUBCONTRACT NO. 98SC000001

PROJECT NAME: WASTE PITS REMEDIAL ACTION PROJECT (WPRAP)

TITLE: AREA 10 DRYER FEED SYSTEM PROCESS FLOW DIAGRAM

INTERNATIONAL TECHNOLOGY CORPORATION
... Creating a Safer Tomorrow

DESIGNED BY	DDP	CHECKED BY	DDP		REVISION
DRAWN BY	JWH	APPROVED BY	CP		B
DATE	12/12/97	DWG. SCALE	NONE		
IT PROJECT NO.	773481	DRAWING NO.	D-10-10-001		

rep-10-1 02/18/98 4:20pm JHebberd

DRAWING NUMBER D-15-10-001

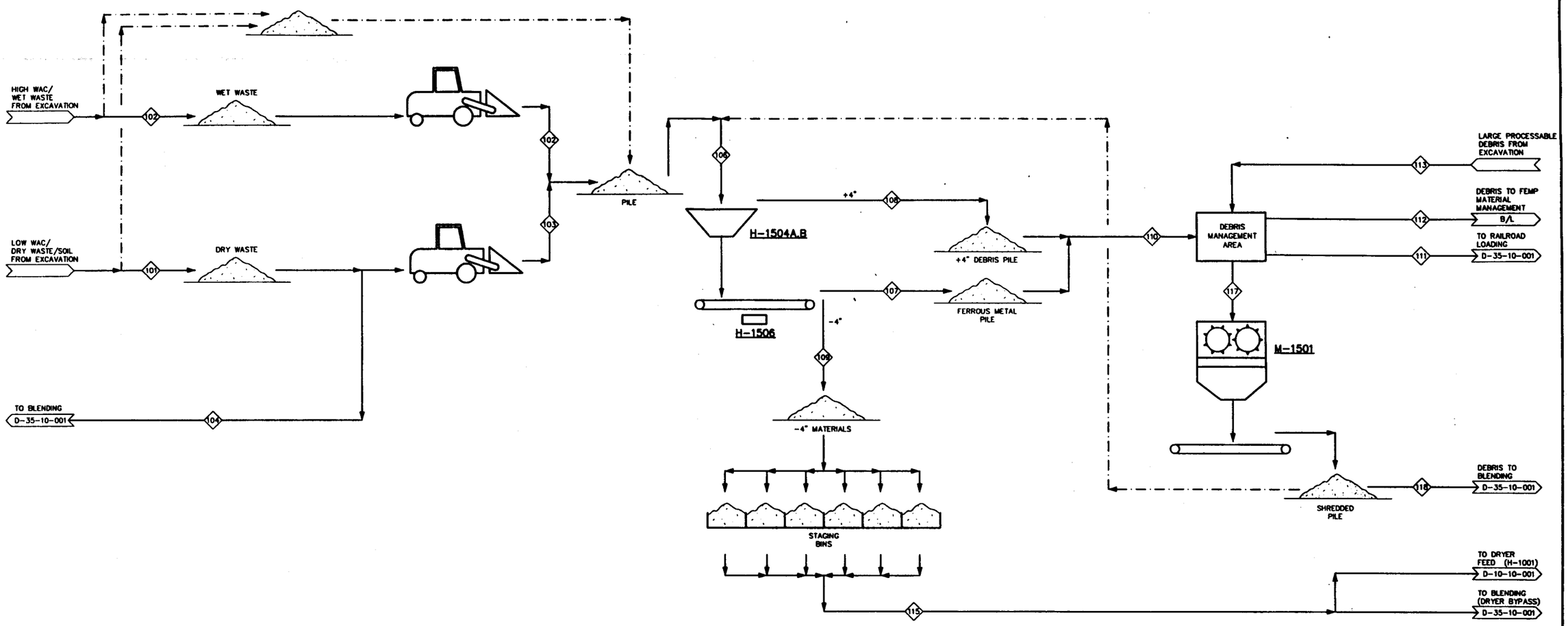

H-1504A,B 4" VIBRATOR SCREEN

H-1506 MAGNETIC SEPARATOR

M-1501 DEBRIS SHREDDER

000216

STREAM NO. / COMPONENT	(NOTE 1) 101 LOW WAC WASTE FROM EXCAVATION	(NOTE 1) 102 HIGH WAC WASTE FROM EXCAVATION	103 WASTE TO SIZE REDUCTION	104 WASTE TO BLENDING	106 WASTE TO SCREEN	107 FERROUS METAL	108 OVERSIZE	109 -4"	110 DEBRIS	111 DEBRIS TO LOADER	112 DEBRIS TO FDF	113 LARGE DEBRIS FROM EXCAVATION	115 SOLIDS TO DRYER	117 MATERIAL TO SHREDDER	118 DEBRIS TO BLENDING	◇	◇	◇	◇	◇	◇	◇	◇
AVERAGE CONDITION																							
H_2O LB/HR													18,320										
SOIL/PARTICULATE LB/HR													26,106										
ORGANICS LB/HR													3,133										
TOTAL MASS FLOW LB/HR													47,559										
VOLUMETRIC FLOW ACFM (GPM) [YD^2]																							
TEMPERATURE °F	AMB	AMB	AMB	AMB	AMB	AMB	AMB	AMB	AMB	AMB	AMB	AMB	60										
PRESSURE IN. W.C. (PSI)													ATM										
ENTHALPY MM BTU/HR													100										
MAXIMUM CONDITION																							
TOTAL MASS LB/HR					200,000								61,200										

1. QUANTITY VARIES BY PHASE - SEE EXCAVATION PLAN.
2. SUMPS ARE SHOWN ON DRAWING D-90-10-001, SITE WATER BALANCE.

REV	DATE	BY	CHK'D	APR'VD	DESCRIPTION
B	2/10/98	JWH		CP	ISSUED FOR EPA REVIEW
A	12/31/97	JWH			ISSUED FOR DRAFT PLANT FACILITIES ENG. PKG.

FLUOR DANIEL FERNALD

WASTE PITS REMEDIAL ACTION PROJECT (WPRAP)
FERNALD, OHIO
FDF SUBCONTRACT NO. 98SC000001

PROJECT NAME: WASTE PITS REMEDIAL ACTION PROJECT (WPRAP)

TITLE: AREA 15 MATERIAL HANDLING PROCESS FLOW DIAGRAM

INTERNATIONAL TECHNOLOGY CORPORATION
... *Creating a Safer Tomorrow*

DESIGNED BY		CHECKED BY		REVISION
DRAWN BY	JWH	APPROVED BY	CP	B
DATE	12/31/97	DWG. SCALE	NONE	
IT PROJECT NO.	773481	DRAWING NO.	D-15-10-001	

DRAWING NUMBER D-20-10-001

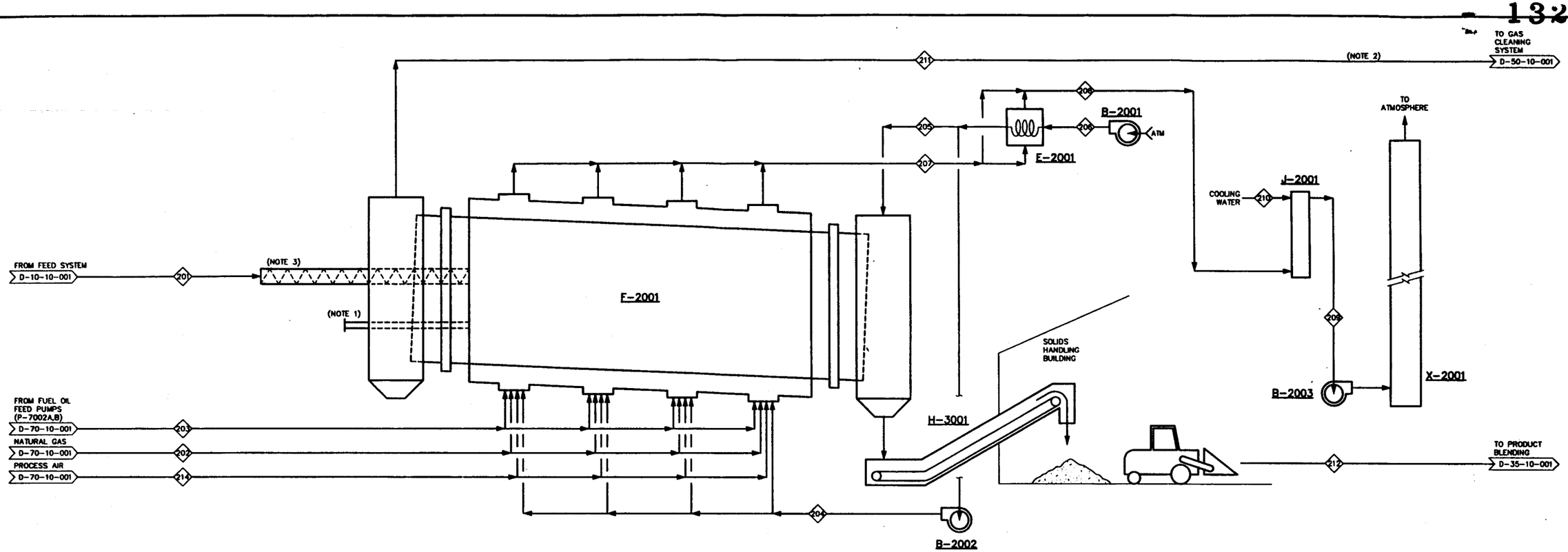

F-2001	B-2002	E-2001	B-2001	H-3001	J-2001	B-2003	X-2001
ROTARY DRYER	COMBUSTION AIR FAN	RECUPERATIVE HEATER	AIR SUPPLY FAN	PRODUCT CONVEYOR	SPRAY QUENCH	FURNACE INDUCED DRAFT FAN	FURNACE STACK

000217

STREAM NO. / COMPONENT		201 CONDITIONED FEED	202 NATURAL GAS	203 FUEL OIL	204 COMBUSTION AIR	205 (NOTE 6) SWEEP AIR	206 AIR SUPPLY	207 FURNACE COMB. GAS	208 RECUPERATOR OFF-GAS	209 FURNACE STACK GAS	210 COOLING WATER	211 DRYER OFF-GAS	212 DRIED PRODUCT	214 (NOTE 4) PROCESS AIR
CO_2	LB/HR						0	5,503	5,503	5,503				
O_2	LB/HR				8,502	1,878	10,380	773	773	773		1,878		
N_2	LB/HR				28,162	6,288	34,450	28,187	28,187	28,187		6,288		
H_2O	LB/HR	18,320			367		367	4,564	4,564	8,768	4,204	15,295	3,025	
SOIL/PARTICULATE	LB/HR	26,967					0			0		1,374	25,595	
ORGANICS	LB/HR	3,133					0			0		1,187	1,946	
SO_2	LB/HR						0	0	0	0				
NATURAL GAS	LB/HR		1,996	0			0			0				
FUEL OIL	LB/HR						0			0				
TOTAL MASS FLOW	LB/HR	48,420	1,996	0	37,031	8,166	45,197	39,027	39,027	43,231	4,204	26,022	30,566	
VOLUMETRIC FLOW	ACFM (GPM)				15,343	3,650	9,617	37,024	27,501	21,441	(7)	16,318		
TEMPERATURE	°F	60	60	60	600	600	60	1,700	1,129	600	60	723	210	
PRESSURE	IN. W.C. (PSIG)		(47)		434.6	406.9	415.9	406.9	402.9	401.9		405.9		
ENTHALPY	MM BTU/HR		41.91	0	5.35	1.07	0.37	23.62	17.57	17.57		22.79	1.42	
MAXIMUM CONDITIONS														
TOTAL MASS FLOW	LB/HR	61,200	2,380	2,842	65,541	17,420	82,961	69,102	69,102	89,574	20,472	36,148	39,569	
VOLUMETRIC FLOW	ACFM (GPM)			(7)	33,115	7,746	18,680	74,815	74,815	47,181	(41)	18,557		
TEMPERATURE	°F	200	60	60	750	750	60	2,010	2,010	600	60	725	210	
PRESSURE	IN. W.C. (PSIG)		60	(20)	438.7	406.9	420.9	406.9	406.9	401.9		405.9		
ENTHALPY	MM BTU/HR		50	54	9.46	2.92	0.60	41.63	41.63	41.63	0	27.47	1.91	
MINIMUM CONDITIONS														
TOTAL MASS FLOW	LB/HR	0	257	0	6,554	8,166	14,720	6,910	6,910	6,910	0	13,574	8,328	
VOLUMETRIC FLOW	ACFM (GPM)			0	1,423	1,782	3,205	5,937	2,908	2,908	0	7,382		
TEMPERATURE	°F		60		60	60	60	1,500	500	500		300	210	
PRESSURE	IN W.C. (PSIG)		45		413.8	406.9	410.9	404.9	404.9	401.9		405.9		
ENTHALPY	MM BTU/HR	0	(NOTE 7) 5.4	0	0	0	0	4.16	1.27	1.27		7.94	0.4	

STREAM NO.	COMPONENT	213 (NOTE 1)	215	216	217	218	219	220	221	222

1. AQUEOUS SLUDGE IS A FUTURE OPTION.
2. DRYER OFF-GAS FLOW AND TEMPERATURE MAY VARY WIDELY DURING OPERATION. FLOWS AND TEMPERATURES PROVIDED SHOULD BE CONSIDERED TO BE AVERAGE. SPIKES OF ±100° F AND ±20% OF FLOW WILL BE COMMON DURING ACTUAL OPERATION
3. FOR DETAILS OF THE FEED SYSTEM, SEE DRAWING D-10-10-001.
4. ATOMIZING AIR FLOW IS INCLUDED IN STREAM 204
5. MINIMUM IS BASED ON MAXIMUM BURNER TURNDOWN OF 10:1.
6. LEAK AIR IS INCLUDED IN STREAM 205.

REV	DATE	BY	CHK'D	APR'VD	DESCRIPTION
B	2/10/98	JWH	JLF	CP	ISSUED FOR EPA REVIEW
A	12/31/97	JWH	JLF	CP	ISSUED FOR DRAFT PLANT FACILITIES ENG. PKG.

FLUOR DANIEL FERNALD

WASTE PITS REMEDIAL ACTION PROJECT (WPRAP)
FERNALD, OHIO
FDF SUBCONTRACT NO. 98SC000001

PROJECT NAME
WASTE PITS REMEDIAL ACTION PROJECT (WPRAP)

TITLE
AREA 20
INDIRECT DRYER
PROCESS FLOW DIAGRAM

INTERNATIONAL TECHNOLOGY CORPORATION
... *Creating a Safer Tomorrow*

DESIGNED BY	JLF	CHECKED BY	JLF		REVISION
DRAWN BY	JWH	APPROVED BY	CP		
DATE	12/31/97	DWG. SCALE	NONE		B
IT PROJECT NO.	773481	DRAWING NO.	D-20-10-001		

DRAWING NUMBER D-35-10-001

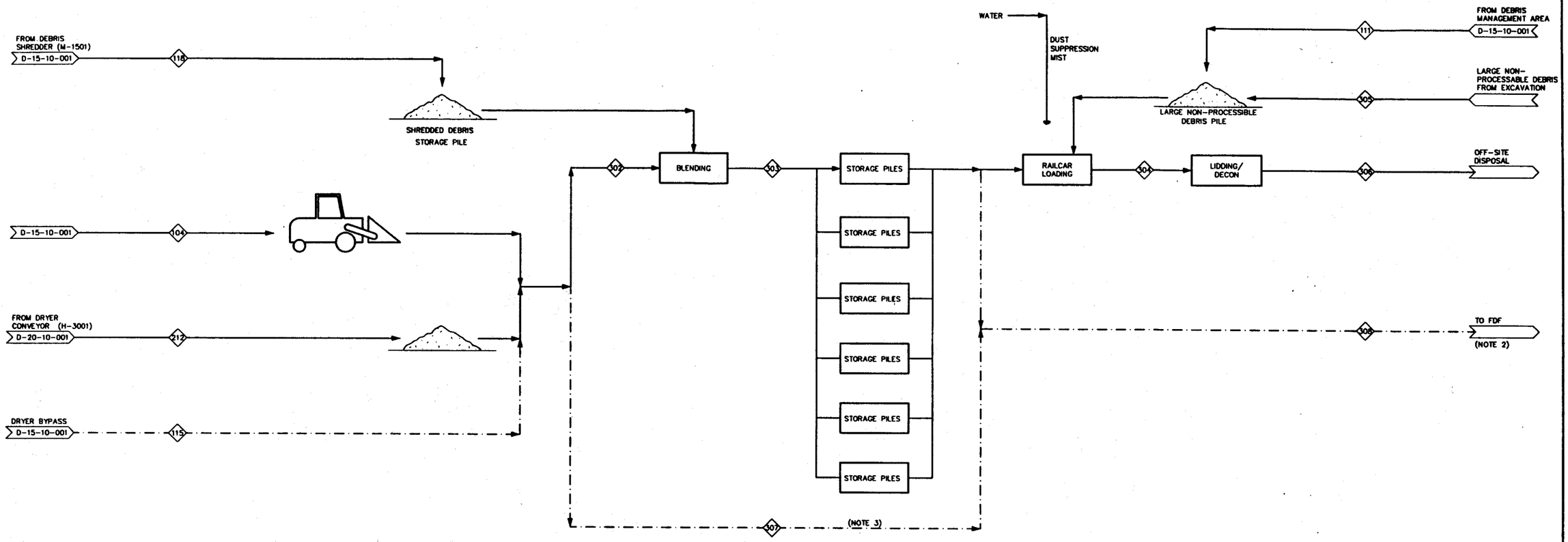

000218

STREAM NO. / COMPONENT		(NOTE 1) 104 NON-DRIED WASTE FOR BLENDING	(NOTE 1) 111 LARGE NON-PROCESSABLE WASTE FROM WASTE PROCESSING	115 DRYER BYPASS MATERIAL	118 SHREDDED MATERIAL	212 DRIED WASTE	302 WASTE TO BLENDING	303 BLENDED WASTE	304 RAILCAR LOADOUT	305 NON-PROCESSABLE WASTE FROM EXCAVATION	306 WASTE TO PCDF	307 TO REBLEND	308 RCRA CHARACTERISTIC TO FDF
AVERAGE CONDITION													
H_2O	LB/HR					3,025							
SOIL/PARTICULATE	LB/HR					24,732							
ORGANICS	LB/HR					1,946							
TOTAL MASS FLOW	LB/HR					29,703							
VOLUMETRIC FLOW	ACFM (GPM)												
TEMPERATURE	°F	AMB		AMB		210							
PRESSURE	IN. W.C. (PSI)												
ENTHALPY	MM BTU/HR												
CARS/DAY	AUG/MAX								6/8		6/8		
MAXIMUM CONDITION													
TOTAL MASS FLOW	LB/HR					39,569							

1. VARIES WITH PHASE - SEE EXCAVATION PLAN.
2. IN THE UNLIKELY EVENT THAT SAMPLING AND ANALYSIS INDICATES RCRA CHARACTERISTIC WASTE, IT WILL BE TURNED OVER TO FDF.
3. IN THE UNLIKELY EVENT THAT SAMPLING AND ANALYSIS INDICATES WASTE IN A STORAGE BIN DOES NOT MEET CDF WAC FOR MOISTURE OR RADIONUCLIDES, IT WILL BE REBLENDED.

REV	DATE	BY	CHK'D	APR'VD	DESCRIPTION
B	2/10/98	JWH		CP	ISSUED FOR EPA REVIEW
A	12/31/97	JWH		CP	ISSUED FOR DRAFT PLANT FACILITIES ENG. PKG.

FLUOR DANIEL FERNALD

WASTE PITS REMEDIAL ACTION PROJECT (WPRAP)
FERNALD, OHIO
FDF SUBCONTRACT NO. 98SC000001

PROJECT NAME
WASTE PITS REMEDIAL ACTION PROJECT (WPRAP)

TITLE
AREA 35
RAILCAR LOADING/LIDDING
PROCESS FLOW DIAGRAM

INTERNATIONAL TECHNOLOGY CORPORATION
... *Creating a Safer Tomorrow*

DESIGNED BY		CHECKED BY		REVISION
DRAWN BY	JWH	APPROVED BY	CP	B
DATE	12/31/97	DWG. SCALE	NONE	
IT PROJECT NO.	773481	DRAWING NO.	D-35-10-001	

DRAWING NUMBER D-50-10-001

1321

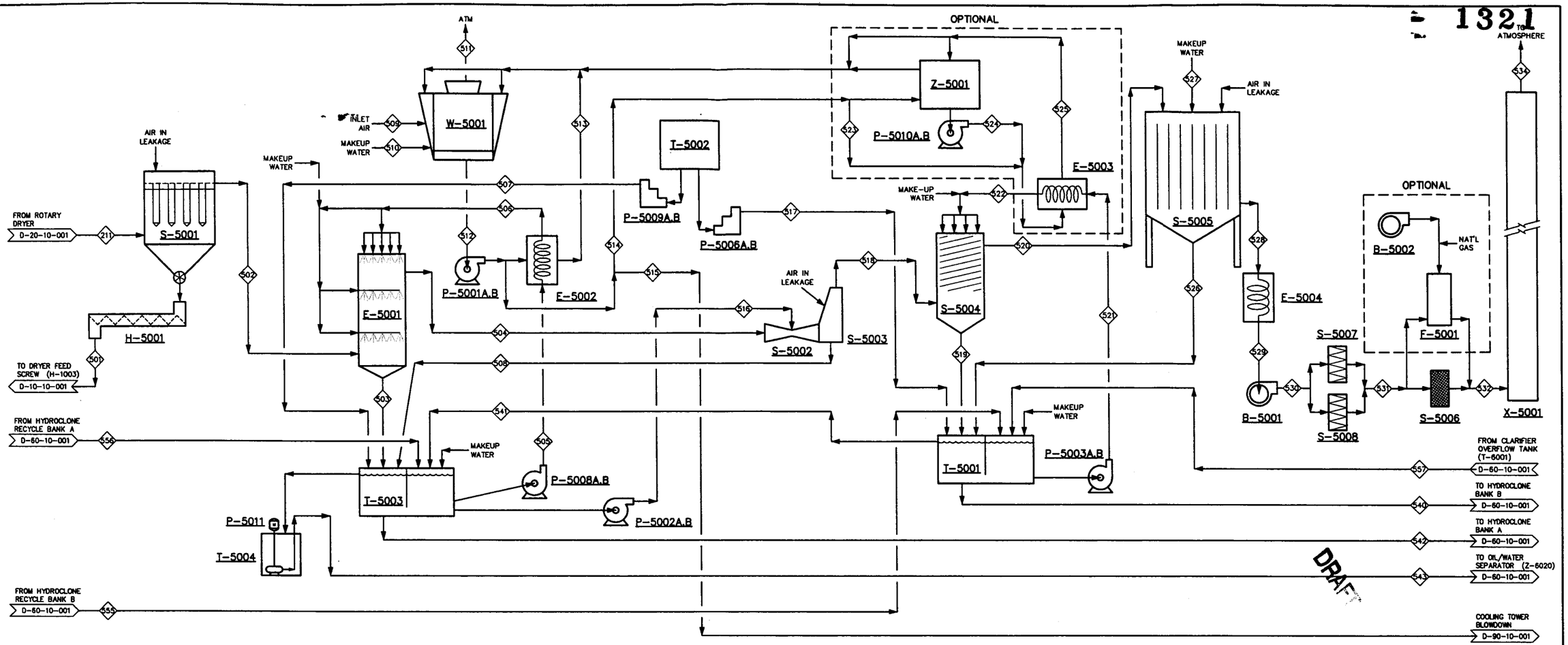

S-5001 HIGH EFFICIENCY CYCLONE SEPARATOR	**W-5001** COOLING TOWER	**P-5011** OVERFLOW SUMP PUMP	**P-5001A,B** COOLING WATER RECIRC PUMP	**T-5003** SETTLING TANK	**T-5002** CAUSTIC TANK	**P-5006A,B** SCRUBBER CAUSTIC METERING PUMP	**P-5002A,B** VENTURI RECIRC PUMP	**S-5004** CONTACT SCRUBBER	**P-5010A,B** CONTACT SCRUBBER CHILLER RECIRC PUMP	**T-5001** CONTACT SCRUBBER SUMP	**S-5005** WESP WET ELECTROSTATIC PRECIPITATOR	**S-5007** HEPA UNIT 1	**B-5002** COMBUSTION AIR BLOWER	**S-5006** CARBON ADSORBER	**X-5001** VENT STACK
H-5001 CYCLONE SOLIDS TRANSFER SCREW	**E-5001** SPRAY QUENCH	**T-5004** OVERFLOW SUMP	**E-5002** HEAT EXCHANGER	**P-5008A,B** SPRAY QUENCH RECIRC. PUMP	**P-5009A,B** QUENCH CAUSTIC METERING PUMP	**S-5002** VENTURI SCRUBBER	**S-5003** MIST ELIMINATOR	**Z-5001** CONTACT SCRUBBER RECIRC CHILLER	**E-5003** CONTACT SCRUBBER HEAT EXCHANGER	**P-5003A,B** CONTACT SCRUBBER RECIRC PUMP	**E-5004** OFF-GAS REHEATER	**S-5008** HEPA UNIT 2	**F-5001** THERMAL OXIDER	**B-5001** INDUCED AIR FAN	

000219

STREAM NO. / COMPONENT		211 DRYER OFF-GAS	501 CYCLONE SOLIDS	502 CYCLONE OUTLET	503 SPRAY QUENCH LIQ.	504 QUENCH OUTLET	505 PRIMARY HEAT EXCHANGER INLET (HE)	506 PRIMARY HEAT EXCHANGER OUTLET (HE)	507 QUENCH CAUSTIC INJ.	508 VENTURI LIQ. RETURN	509 COOLING TOWER AIR INLET	510 COOLING TOWER MAKEUP	511 COOLING TOWER EXHAUST	512 TOTAL COOLING TOWER OUTLET (CS)	513 PRIMARY HEAT EXCHANGER OUTLET (CS)	514 CHILLER INLET (CS)	515 COOLING TOWER BLOWDOWN	516 VENTURI SCRUBBER RECIRC.	517 CONTACT SCRUBBER CAUSTIC INJ.	518 VENTURI TO CONTACT SCRUBBER OUTLET	519 CONTACT SCRUBBER BLOWDOWN	520 CONTACT SCRUBBER OUTLET	521 SECONDARY HEAT EXCHANGER INLET (PHE)	522 SECONDARY HEAT EXCHANGER OUTLET (PHE)	523 SECONDARY HEAT EXCHANGER INLET (WATER) (CS)	524 SECONDARY HEAT EXCHANGER INLET (CS)	525 SECONDARY HEAT EXCHANGER OUTLET (CS)	526 WESP BLOWDOWN	527 WESP MAKEUP	528 WESP OUTLET	529 REHEATER OUTLET	530 FAN OUTLET	531 HEPA OUTLET	532 CARBON BED OUTLET	534 STACK OUTLET	540 HYDROCLONE INLET BANK B	541 OVERFLOW FROM T-5001 TO T-5003	542 HYDROCLONE INLET BANK A	543 QUENCH ORGANIC BLOWDOWN	555 HYDROCLONE RETURN BANK B	556 HYDROCLONE RETURN BANK A	557 CLARIFIER OFFLOW TO CONTACT SCRUBBER SUMP
CO_2	LB/HR																																									
O_2	LB/HR	1,878		1,981		1,981					56,500		56,500							1,981		2,188							3,481	3,481	3,481	3,481	3,481	3,481								
N_2	LB/HR	8,288		8,633		8,633					212,440		212,440							8,633		7,322							11,814	11,814	11,814	11,814	11,814	11,814								
H_2O	LB/HR	15,295		15,295	511,578	1,782	498,000	498,000	100	13,420	5,015	39,840	25,393	1,394,400	1,170,300	224,100	13,944	13,161	50	1,524	165,645	219	164,340	164,340	224,100	224,100	224,100	1,992	1,992	347	347	347	347	347	347	249,000	14,367	249,000	498	224,100	224,100	32,495
SOIL/PARTICULATE	LB/HR	1,374	861	513	51	461				449										12.6	4.4	8.2						8.2		0.008	0.008	0.008	0.000002	0.000002	0.000002	12.6		499.9		7.6	200	
TOTAL ORGANICS	LB/HR	1,187		1,187	59.3	1,128				56.4										1,071	938	133.5						6.7		126.8	126.8	126.8	126.8	3.2	3.2							
VOCs @ 0.1 x TOC	LB/HR																																									
TOTAL MASS FLOW	LB/HR	26,022	861	25,608	511,689	11,985	498,000	498,000	100	13,925	273,955	39,840	294,333	1,394,400	1,170,300	224,100	13,944	13,161	50	11,221	168,587	9,870	164,340	164,340	224,100	224,100	224,100	2,007	1,992	15,569	15,569	15,569	15,569	15,445	15,445	249,013	14,367	249,500	498	224,108	224,300	32,495
VOLUMETRIC FLOW	ACFM(SCFM)(CFM)	16,318		17,467	(1,027.27)	3,582	(1,000)	(1,000)	(0.2)	(27.1)	63,539	(80)	76,275	(2,800)	(2,350)	(450)	(28)	(28.43)	(0.1)	3,368	(334.7)	2,302	(330)	(330)	(450)	(450)	(450)	(4.01)	(4)	3,616	3,617	3,884	3,884	3,823	3,823	(500)	(29)	(500)	(1)	(450)	(450)	(65)
TEMPERATURE	°F	723	705	705	150	150	180	133	80	145	85	75	125	85	105	85	85	145		145	80	80	75	60	75	44	55	80	70	80	110	120	120	120	120	140	170	140	170	140	170	140
PRESSURE	IN. W.C. (PSI)	405.9		397.9		395.9														385.9		383.4								381.9	381.4	418.9	412.4	406.4	406.9	(100)	(50)	(100)	(50)	(100)	(100)	(50)
ENTHALPY	MM BTU/HR	23.164		23.052		2.323	73.69	50.3	0	1.516	11.06	1.71	38.51	73.95	65.46	11.89	0.74			2.017	7.96	0.42	7.07	4.81	9.65	2.7	5.17	0.1	0	0.67	0.79	0.83	0.83	0.83	0.83							
CHANGE IN ENTHALPY	BTU/HR			(111,361)		(20,729,566)		23,388,797					(25,451,446)		(23,388,797)					(305,772)		(1,593,089)		2,463,288			(2,463,288)			249,034	114,846											
MAX VOLUMETRIC FLOW	ACFM(CFM)	18,557		16,200	(1,035)	5,200	(1,000)	(1,000)	(1)	(1.1)	45,000	(110)	54,412	(3,300)	(3,000)	(600)	(60)	(50)	(1)	5,150	(5.9)	3,600	(130)	(130)	(600)	(450)	(450)	(10)	(10)	5,000	5,200	5,300	5,300	5,300	5,300	(500)	(35)	(500)	(30)	(500)	(500)	(75)
MIN VOLUMETRIC FLOW	ACFM(CFM)	7,382		6,515	(800)	2,800	(800)	(800)	(0)	(0.5)	30,000	(0)	32,000	(2,500)	(2,000)	(400)	(10)	(15)	(0)	2,700	(2.6)	1,930	(80)	(80)	(300)	(450)	(450)	(0.1)	(2)	3,200	3,400	3,500	3,500	3,500	3,500	(300)	(0)	(300)	(0)	(300)	(300)	(5)
MAX MASS FLOW	LB/HR	38,148	1,151	37,150	515,430	22,600	498,000	498,000	498	1,150	193,950	54,780	215,549	1,843,400	1,494,000	298,800	29,880	24,900	498	21,500	2,930	18,600	64,740	64,740	298,800	224,100	224,100	4,980	4,980	21,000	21,000	21,000	21,000	21,000	21,000	250,000	17,430	250,000	14,940	250,000	250,000	37,350
MIN MASS FLOW	LB/HR	13,574	125	13,410	398,400	9,900	398,400	398,400	0	320	129,300	0	127,733	1,245,000	998,000	199,200	4,980	7,470	0	9,600	1,290	8,300	39,840	39,840	149,400	224,100	224,100	50	996	14,000	14,000	14,000	14,000	14,000	14,000	149,400	0	149,400	0	149,400	149,400	2,490
MAX TEMPERATURE	°F	725	725	725	210	180	180	170	150	145	92	95	130	110	120	110	110	150	150	180	80	100	150	85	85	55	65	100	95	100	130	140	140	140	140	150	140	210	210	150	210	150
MIN TEMPERATURE	°F	300	300	300	100	100	100	90	AMBIENT	145	17	AMBIENT	28	65	80	65	65	90	AMBIENT	100	80	70	100	60	65	40	50	60	AMBIENT	60	90	100	100	100	100	85	85	85	85	85	85	85

1. CHILLER AND THERMAL OXIDER UNITS ARE OPTIONS TO HANDLE ORGANICS IF CONCENTRATIONS REQUIRE.

REV	DATE	BY	CHK'D	APR'VD	DESCRIPTION
B	2/10/98	JWH	RPM	CP	ISSUED FOR EPA REVIEW
A	12/31/97	JWH	RPM	CP	ISSUED FOR DRAFT PLANT FACILITIES ENG. PKG.

FLUOR DANIEL FERNALD

WASTE PITS REMEDIAL ACTION PROJECT (WPRAP)
FERNALD, OHIO
FDF SUBCONTRACT NO. 98SC000001

PROJECT NAME
WASTE PITS REMEDIAL ACTION PROJECT (WPRAP)

TITLE
AREA 50
AIR POLLUTION CONTROL SYSTEM
PROCESS FLOW DIAGRAM

INTERNATIONAL TECHNOLOGY CORPORATION
... *Creating a Safer Tomorrow*

DESIGNED BY	RPM	CHECKED BY	RPM		REVISION
DRAWN BY	JWH	APPROVED BY	CP		B
DATE	12/31/97	DWG. SCALE	NONE		
IT PROJECT NO.	773481	DRAWING NO.	D-50-10-001		

REG-50-1 02/18/98 4:50pm JHubbard

DRAWING NUMBER D-60-10-001

1321

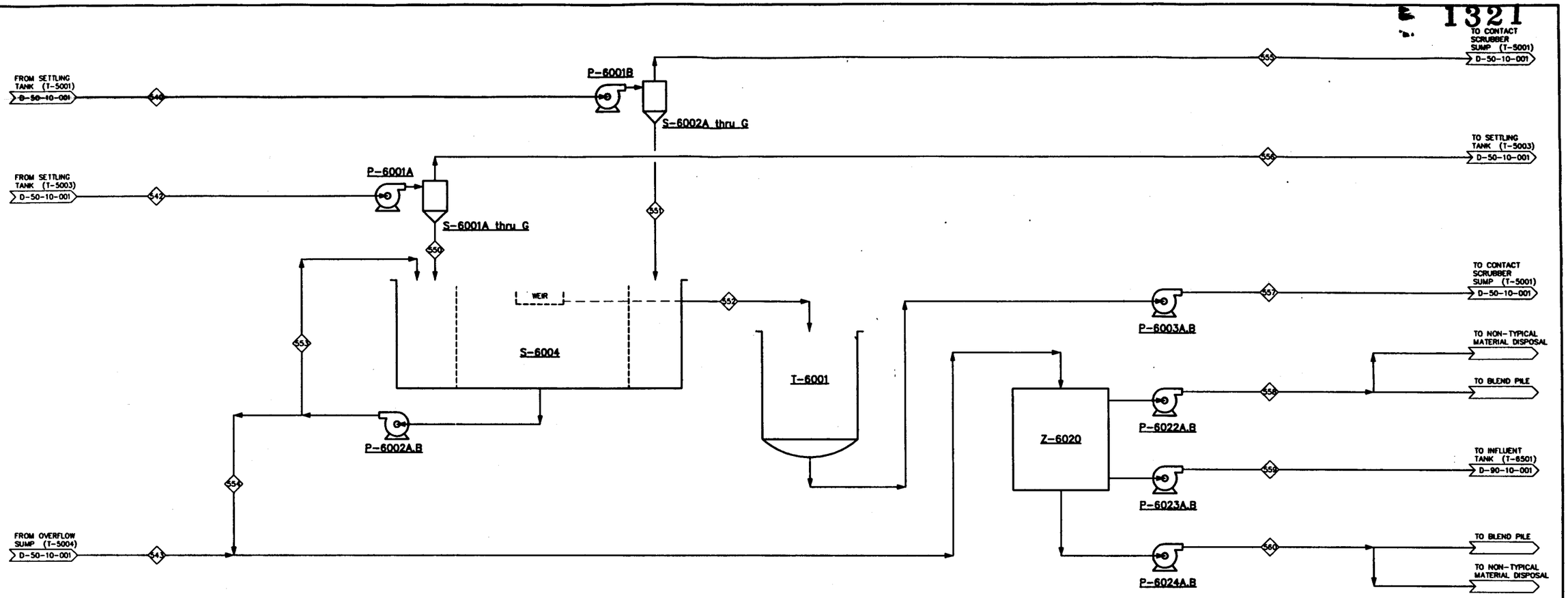

P-6001A	**S-6001A thru G**	**P-6001A**	**S-6002A thru G**	**S-6004**	**P-6002A,B**	**T-6001**	**Z-6020**	**P-6003A,B**	**P-6022A,B**	**P-6023A,B**	**P-6024A,B**
HYDROCLONE RECIRC PUMP BANK A	HYDROCLONE SYSTEM BANK A	HYDROCLONE RECIRC PUMP BANK B	HYDROCLONE SYSTEM BANK B	CLARIFIER	CLARIFIER SLUDGE PUMPS	CLARIFIER OVERFLOW TANK	OIL/WATER SEPARATOR	CLARIFIER OVERFLOW PUMPS	OIL/WATER SEPARATOR WASTE OIL PUMPS	OIL/WATER SEPARATOR WASTE WATER PUMPS	OIL/WATER SEPARATOR SLUDGE PUMPS

000220

STREAM NO. / COMPONENT		540	542	543	550	551	552	553	554	555	556	557	558	559	560
		HYDROCLONE INLET-BANK B	HYDROCLONE INLET-BANK A	QUENCH ORGANIC BLOWDOWN	HYDROCLONE BLOWDOWN BANK A	HYDROCLONE BLOWDOWN BANK B	CLARIFIER OVERFLOW	CLARIFIER RECYCLE	CLARIFIER PURGE TO OIL/WATER SEPARATOR	HYDROCLONE RETURN BANK B	HYDROCLONE RETURN BANK A	CLARIFIER OVERFLOW TO CONTACT SCRUBBER SUMP	OIL/WATER SEPARATOR ORGANIC PURGE	OIL/WATER SEPARATOR WATER TO INFLUENT TANK	OIL/WATER SEPARATOR SLUDGE BLOWDOWN
CO_2	LB/HR														
O_2	LB/HR														
N_2	LB/HR														
H_2O	LB/HR	249,000	249,000	498	24,900	24,900	16,932	0	17,306	224,100	224,100	16,932		16,434	996
SOIL/PARTICULATE	LB/HR	11.5	458.4		275	5				6.9	183.4				1,260
TOTAL ORGANICS	LB/HR												128		
VOCs @ 0.1 x TOC	LB/HR														
TOTAL MASS FLOW	LB/HR	249,012	249,458	498	25,175	24,905	16,932	0	17,306	224,107	224,283	16,932	173	16,434	2,256
VOLUMETRIC FLOW	ACFM(SCFM)[GPM]	[500]	[500]	[1]	[50]	[50]	[65]	[0]	[35]	[450]	[450]	[65]	[0.35]	[33]	[2]
TEMPERATURE	°F	140	150	150	150	140	140	0	140	140	150	140	140	140	140
PRESSURE	IN. W.C. (PSI)	(100)	(100)	(50)	(50)	(50)	(50)	(50)	(50)	(100)	(100)	(50)	(50)	(50)	(50)
ENTHALPY	MM BTU/HR														
CHANGE IN ENTHALPY	BTU/HR														
MAX VOLUMETRIC FLOW	ACFM[GPM]	[500]	[500]	[30]	[60]	[60]	[75]	[50]	[60]	[500]	[500]	[75]	[2]	[60]	[30]
MIN VOLUMETRIC FLOW	ACFM[GPM]	[300]	[300]	[0]	[5]	[5]	[5]	[0]	[5]	[300]	[300]	[5]	[0]	[0]	[0]
MAX MASS FLOW	LB/HR	250,000	250,000	14,940	29,880	29,880	29,880	17,306	29,880	250,000	250,000	37,350	996	29,880	14,940
MIN MASS FLOW	LB/HR	149,400	149,400	0	2,490	2,490	2,490	0	2,490	149,400	149,400	2,490	0	0	0
MAX TEMPERATURE	°F	150	210	210	210	150	210	210	210	150	210	210	210	210	210
MIN TEMPERATURE	°F	85	85	85	85	85	85	85	85	85	85	85	85	85	85

1.

REV	DATE	BY	CHK'D	APR'VD	DESCRIPTION
B	2/10/98	JWH	BAH	CP	ISSUED FOR EPA REVIEW
A	1/23/97	JWH	BAH	CP	ISSUED FOR DESIGN

FLUOR DANIEL FERNALD

WASTE PITS REMEDIAL ACTION PROJECT (WPRAP)
FERNALD, OHIO
FDF SUBCONTRACT NO. 98SC000001

PROJECT NAME
WASTE PITS REMEDIAL ACTION PROJECT (WPRAP)

TITLE
AREA 60
PROCESS BLOWDOWN PRETREATMENT SYSTEM
PROCESS FLOW DIAGRAM

INTERNATIONAL TECHNOLOGY CORPORATION
... *Creating a Safer Tomorrow*

DESIGNED BY	BAH	CHECKED BY	RPM		REVISION
DRAWN BY	JWH	APPROVED BY	CP		B
DATE	1/16/98	DWG. SCALE	NONE		
IT PROJECT NO.	773481	DRAWING NO.	D-60-10-001		

DRAWING NUMBER D-65-10-001

1321

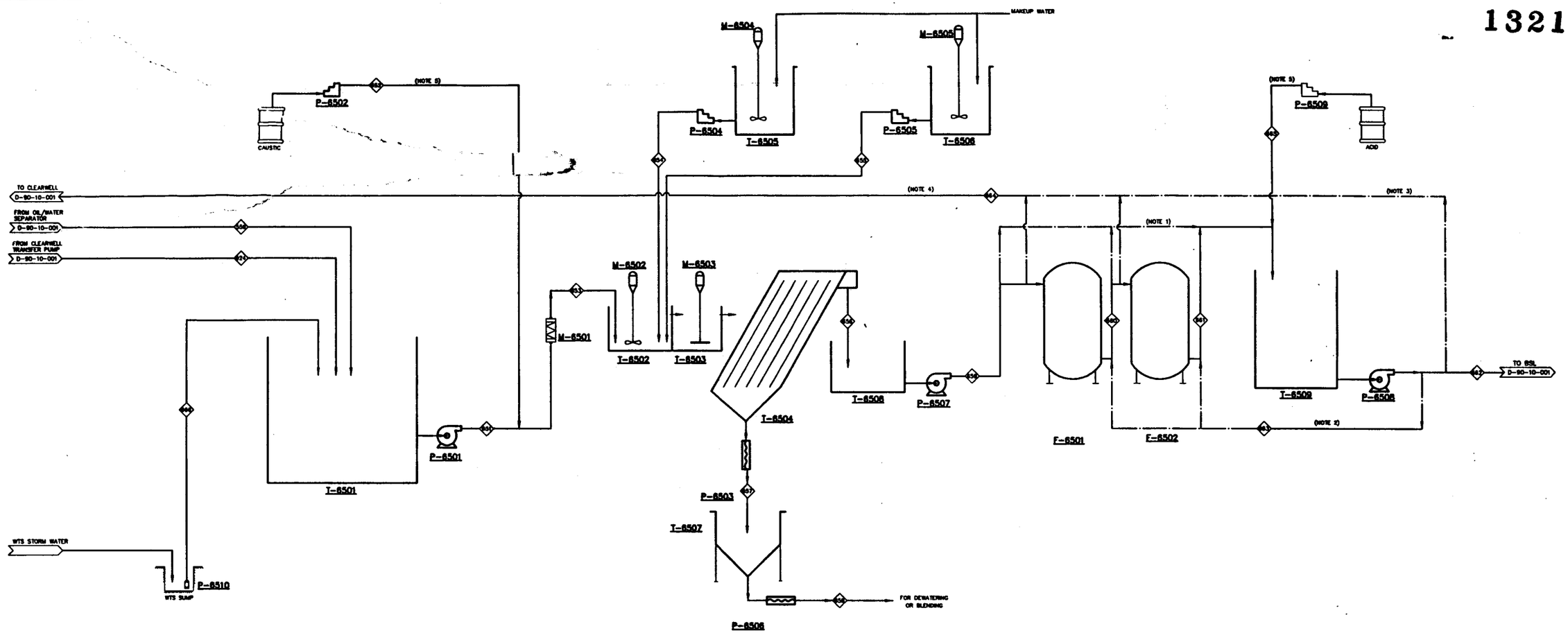

T-6501 INFLUENT TANK	P-6510 WTS SUMP PUMP	P-6502 CAUSTIC METERING PUMP	P-6501 CLARIFIER FEED PUMP	M-6501 STATIC MIXER	M-6502 FLASH MIXER T-6502 FLASH MIX TANK	M-6503 FLOCCULATION MIXER T-6503 FLOCCULATION TANK T-6505 COAGULANT FEED TANK T-6504 INCLINED PLATE CLARIFIER P-6503 CLARIFIER SLUDGE PUMP	M-6504 COAGULANT MIXER P-6504 COAGULANT METERING PUMP	T-6507 SLUDGE HOLDING TANK P-6506 SLUDGE TRANSFER PUMP	M-6505 POLYMER MIXER P-6505 POLYMER METERING PUMP T-6506 POLYMER FEED TANK	T-6508 CLARIFIER OVERFLOW TANK P-6507 FILTER FEED PUMP	F-6501 SAND FILTER	F-6502 ION EXCHANGE UNIT	T-6509 EFFLUENT TANK	P-6508 EFFLUENT PUMP	P-6509 ACID METERING PUMP

STREAM NO. / COMPONENT		650 OIL/WATER SEPARATOR DISCHARGE	651 WTS INFLUENT	652 CAUSTIC FEED	653 CLARIFIER INFLUENT	654 COAGULANT FEED	655 POLYMER FEED	656 CLARIFIER OVERFLOW	657 CLARIFIER SLUDGE	658 WTS SLUDGE DISCHARGE	659 SAND FILTER FEED	660 ION EXCHANGE FEED	661 ION EXCHANGE EFFLUENT	662 WTS EFFLUENT	663 BACKWASH FEED	664 WTS BACKWASH	665 ACID FEED	666 WTS SUMP PUMP	924 CLEARWELL TRANSFER PUMP
TOTAL SUSPENDED SOLIDS	mg/L	0	2,386	0	2,386	0	0	13	35,000	30,000	13	0	0	0	0	192	0	0	3,000
WATER	LB/HR	16,434	83,306	0	83,306	104	10	77,732	5,688	5,688	77,732	77,732	77,732	72,519	5,213	5,213	0	174	66,898
SOLID/PARTICULATE	LB/HR		200	0	200	0	0	1	199	199	1	0	0	0	0	1	0	0	200
TOTAL MASS FLOW	LB/HR	16,434	83,506	0	83,506	104	10	77,733	5,888	5,888	77,733	77,732	77,732	72,519	5,213	5,214	0	174	66,898
VOLUMETRIC FLOW	GPM	33	250	0.3	250	0.3	0.03	250	100	200	250	250	250	250	500	500	0.3	20	200
AVERAGE VOLUMETRIC FLOW	GPD	47,520	239,934	0	239,934	300	30	223,663	16,368	16,368	223,663	223,663	223,663	208,663	15,000	15,000	0	500	191,914
TEMPERATURE	F	140	AMB	AMB	AMB	AMB	AMB	AMB	AMB	AMB	AMB	AMB	AMB	AMB	AMB	AMB	AMB	AMB	AMB

000221

1. WATER CAN BYPASS SAND FILTER AND ION EXCHANGE UNIT OR ONLY THE ION EXCHANGE DEPENDING ON WATER QUALITY.
2. TREATED EFFLUENT CAN BE USED AS BACKWASH WATER.
3. TREATED WATER CAN BE RECYCLED TO THE CLEARWELL IF IT DOES NOT MEET THE WAC FOR DISCHARGE TO THE BSL.
4. PRIMARILY BACKWASH WATER. RECYCLED EFFLUENT WATER ONLY AS NECESSARY.
5. USED FOR pH CONTROL AS NEEDED.

REV	DATE	BY	CHK'D	APR'VD	DESCRIPTION
B	2/10/98	BJP	GSJ	CP	ISSUED FOR EPA REVIEW
A	11/25/97	BJP	GSJ	CP	ISSUED FOR DRAFT PLANT FACILITIES ENG. PKG.

FLUOR DANIEL FERNALD

WASTE PITS REMEDIAL ACTION PROJECT (WPRAP)
FERNALD, OHIO
FDF SUBCONTRACT NO. 98SC000001

PROJECT NAME
WASTE PITS REMEDIAL ACTION PROJECT (WPRAP)

TITLE
AREA 65
WASTEWATER TREATMENT SYSTEM (WTS)
PROCESS FLOW DIAGRAM

INTERNATIONAL TECHNOLOGY CORPORATION
... *Creating a Safer Tomorrow*

DESIGNED BY	BJP	CHECKED BY			REVISION
DRAWN BY	GSJ	APPROVED BY			B
DATE	11/24/97	DWG. SCALE	NONE		
IT PROJECT NO	773481	DRAWING NO	D-65-10-001		

DRAWING NUMBER D-70-10-001

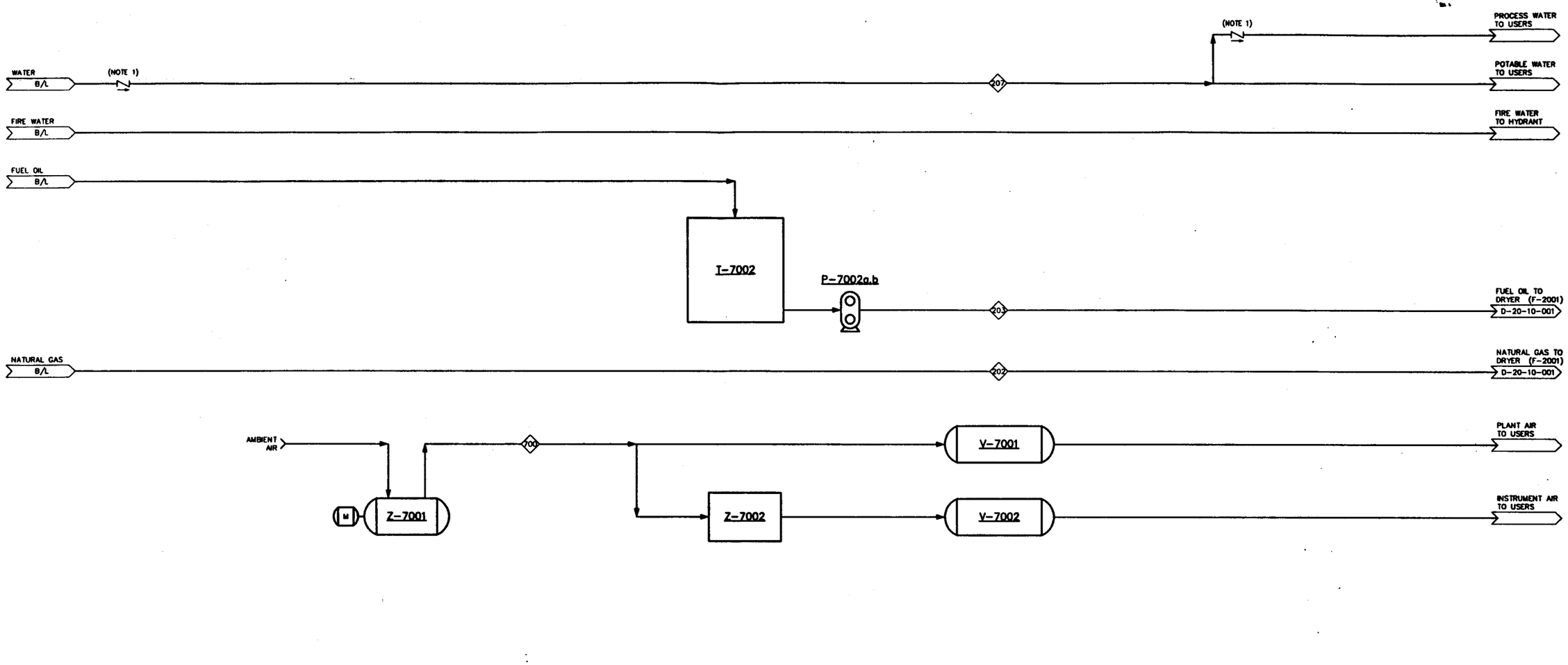

000222

COMPONENT \ STREAM NO.		202 NATURAL GAS	203 FUEL OIL	207 WATER	700 COMPRESSED AIR
AVERAGE					
H_2O	LB/HR			88,571	
AIR	LB/HR				137
FUEL OIL	LB/HR		0		
NATURAL GAS	LB/HR	1,996			
TOTAL MASS FLOW	LB/HR	1,996	0	88,571	137
VOLUMETRIC FLOW	SCFM (GPM)		–	(177)	28.5
TEMPERATURE	°F	60	60	60	60
PRESSURE	IN. W.C. (PSI)	(47)	(70)	(20)	(80)
MAXIMUM					
H_2O	LB/HR			120,000	
AIR	LB/HR				240
FUEL OIL	LB/HR		2,842		
NATURAL GAS	LB/HR	2,380			

1. BACKFLOW PREVENTER

REV	DATE	BY	CHK'D	APR'VD	DESCRIPTION
B	2/10/98	JWH	TGB	CP	ISSUED FOR EPA REVIEW
A	12/31/97	JWH	TGB	CP	ISSUED FOR DRAFT PLANT FACILITIES ENG. PKG.

FLUOR DANIEL FERNALD

WASTE PITS REMEDIAL ACTION PROJECT (WPRAP)
FERNALD, OHIO
FDF SUBCONTRACT NO. 985C000001

PROJECT NAME: WASTE PITS REMEDIAL ACTION PROJECT (WPRAP)

TITLE: AREA 70 UTILITIES PROCESS FLOW DIAGRAM

INTERNATIONAL TECHNOLOGY CORPORATION
... Creating a Safer Tomorrow

DESIGNED BY	TGB	CHECKED BY	TGB	REVISION
DRAWN BY	JWH	APPROVED BY	CP	B
DATE	12/31/97	DWG. SCALE	NONE	
IT PROJECT NO	773481	DRAWING NO	D-70-10-001	

DRAWING NUMBER D-90-10-001

1321

DRAFT

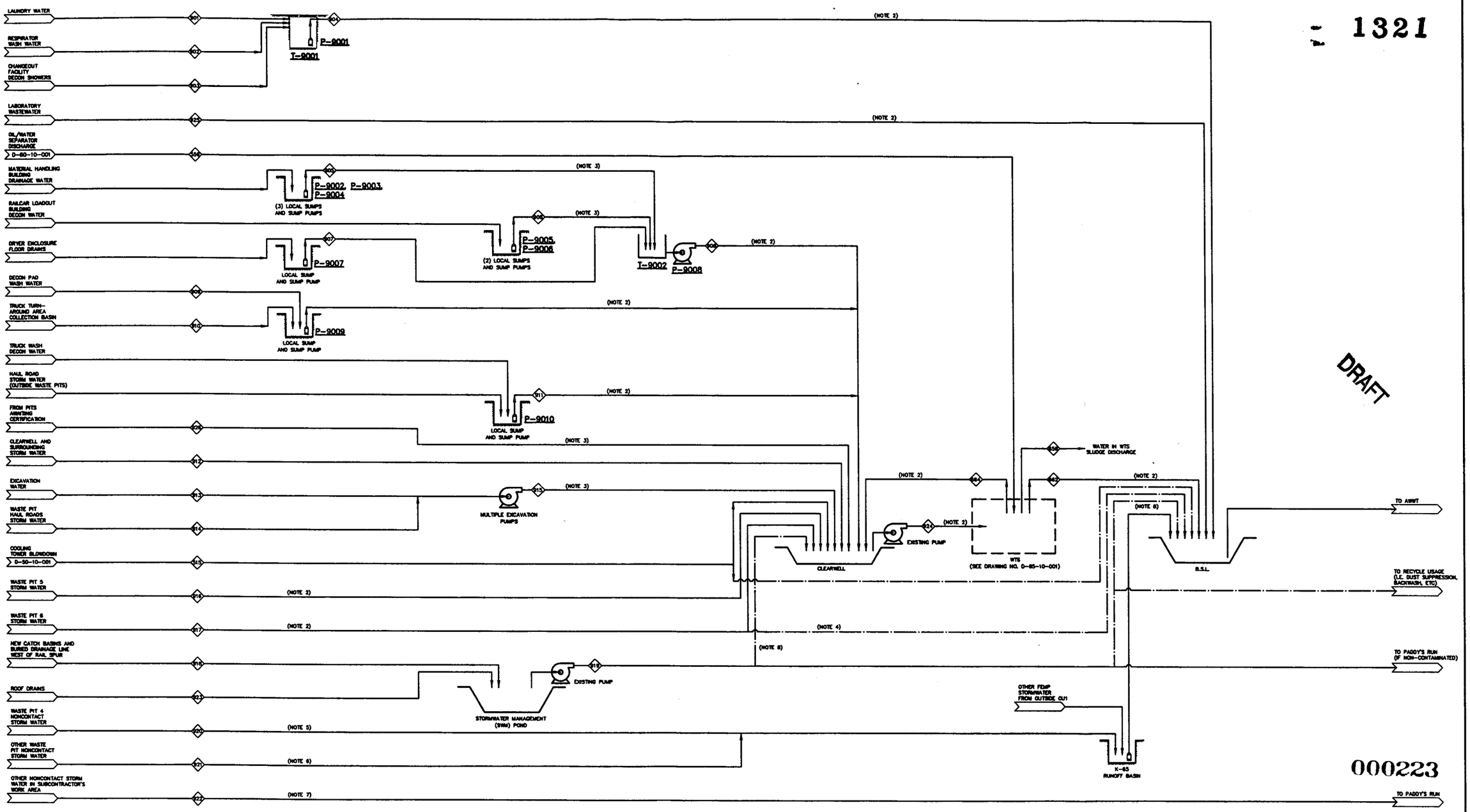

000223

P-9001	GRAY WATER PUMP
T-9001	GRAY WATER COLLECTION TANK (GWCT)
P-9002, 9003, 9004	MATERIAL HANDLING BUILDING (MHB) SUMP PUMPS
P-9005, 9006	RAILCAR LOADOUT BUILDING (RLB) SUMP PUMPS
P-9007	DRYER ENCLOSURE SUMP PUMP
T-9002	MHB COLLECTION TANK (MHBCT)
P-9008	MHBCT TRANSFER PUMP
P-9009	TRUCK TURN-AROUND AREA (TTAA) SUMP PUMP
P-9010	TRUCK WASH SUMP PUMP

STREAM NO. (NOTE 1)	515	358	901	902	903	904	905	906	907	908	909	910	911	912	913	914	915	916	917	918	919	920	921	922	923	924	925	926	858	862	864
	COOLING TOWER BLOWDOWN	OIL/WATER SEPARATOR DISCHARGE	LAUNDRY WATER	RESPIRATOR WASH WATER	DECON SHOWERS	GWCT TRANSFER PUMP	MATERIAL HANDLING BLDG SUMPS	RAILCARD LOADOUT BLDG SUMPS	DRYER ENCLOSURE SUMP	MHBCT TRANSFER PUMP	DECON PAD WATER	TRUCK TURN-AROUND AREA STORM WATER	TRUCK WASH SUMP	CLEARWELL STORM WATER	EXCAVATION WATER	HAUL ROAD STORM WATER	EXCAVATION PUMPS	WASTE PIT 5 STORM WATER	WASTE PIT 6 STORM WATER	SWM POND COLLECTION BASINS	SWM POND EFFLUENT	WASTE PIT 4 NONCONTACT STORM WATER	OTHER WASTE PIT NONCONTACT STORM WATER	NONCONTACT STORM WATER OUTSIDE PITS	ROOF DRAINS	CLEARWELL TRANSFER PUMP	LABORATORY WASTEWATER	FROM PITS AWAITING CERTIFICATION	WATER IN WTS SLUDGE DISCHARGE	WTS EFFLUENT	WTS BACKWASH

1. STREAM DESCRIPTIONS ARE GIVEN IN TABLE 1, BY PHASE.
2. BURIED LINE.
3. SHOWN AS A SINGLE STREAM FOR CALCULATION PURPOSES. ACTUAL FIELD CONDITIONS MAY REQUIRE SEVERAL SEPARATE STREAMS.
4. STREAM CAN GO TO THE BSL IF IT MEETS THE WAC FOR DISCHARGE TO THE BSL.
5. COLLECTION TRENCH AROUND PIT AND THROUGH EXISTING CULVERTS.
6. EXISTING TRENCHES AND CULVERTS.
7. DRAINAGE SWALES AROUND NORTH AND SOUTH SIDE OF BSL; AND AREA NORTH OF PIT 6 AND SWM POND.
8. STREAM CAN GO TO BSL OR CLEARWELL IF IT DOES NOT MEET CRITERIA FOR NPDES DISCHARGE.

REV	DATE	BY	CHK'D	APR'VD	DESCRIPTION
B	2/10/98	JWH	DDP	CP	ISSUED FOR EPA REVIEW
A	01/07/98	PMS	RJC		ISSUED FOR DRAFT PLANT FACILITIES ENG. PKG.

FLUOR DANIEL FERNALD

WASTE PITS REMEDIAL ACTION PROJECT (WPRAP)
FERNALD, OHIO
FDF SUBCONTRACT NO. 98SC000001

PROJECT NAME
WASTE PITS REMEDIAL ACTION PROJECT (WPRAP)

TITLE
AREA 90
SITE WATER BALANCE
PROCESS FLOW DIAGRAM

INTERNATIONAL TECHNOLOGY CORPORATION
... Creating a Safer Tomorrow

DESIGNED BY	P. STERNS	CHECKED BY		REVISION
DRAWN BY	RJC	APPROVED BY		B
DATE	17 DECEMBER 97	DWG. SCALE	NO SCALE	
IT PROJECT NO.	773481	DRAWING NO.	D-90-10-001	

rsg-90-1 02/18/98 4:14pm JHubbard

TABLE 1

SITE WATER BALANCE PROCESS FLOW DIAGRAM

(M-90-10-001)

VOLUMETRIC FLOW RATES

NO.	DESCRIPTION	UNITS	PH. 1	PH. 2	PH. 3	PH. 4	PH. 5	PH. 6	PH. 7	PH. 8	PH. 9	PH. 10
515	COOLING TOWER BLOWDOWN	gpd	40,320	40,320	40,320	40,320	40,320	40,320	40,320	40,320	40,320	40,320
559	OIL/WATER SEPARATOR DISCHARGE	gpd	47,520	47,520	47,520	47,520	47,520	47,520	47,520	47,520	47,520	47,520
901	LAUNDRY WATER	gpd	750	750	750	750	750	750	750	750	750	750
902	RESPIRATOR WASH WATER	gpd	100	100	100	100	100	100	100	100	100	100
903	DECON SHOWERS	gpd	860	860	860	860	860	860	860	860	860	860
904	GWCT TRANSFER PUMP	gpd	1,710	1,710	1,710	1,710	1,710	1,710	1,710	1,710	1,710	1,710
905	MATERIAL HANDLING BLDG SUMPS	gpd	16,000	16,000	16,000	16,000	16,000	16,000	16,000	16,000	16,000	16,000
906	RAILCAR LOADOUT BLDG SUMPS	gpd	1,200	1,200	1,200	1,200	1,200	1,200	1,200	1,200	1,200	1,200
907	DRYER ENCLOSURE SUMP	gpd	1,000	1,000	1,000	1,000	1,000	1,000	1,000	1,000	1,000	1,000
908	MHBCT TRANSFER PUMP	gpd	18,200	18,200	18,200	18,200	18,200	18,200	18,200	18,200	18,200	18,200
909	DECON PAD WATER	gpd	1,500	1,500	1,500	1,500	1,500	1,500	1,500	1,500	1,500	1,500
910	TRUCK TURN-AROUND AREA STORM WATER	gpd	1,800	1,800	1,800	1,800	1,800	1,800	1,800	1,800	1,800	1,800
911	TRUCK WASH SUMP	gpd	1,000	1,000	1,000	1,000	1,000	1,000	1,000	1,000	1,000	1,000
912	CLEARWELL STORM WATER	gpd	7,266	4,181	4,181	4,181	4,181	4,181	3,136	1,941	1,941	1,941
913	EXCAVATION WATER	gpd	20,578	28,037	29,030	70,344	92,405	97,488	98,410	124,114	125,597	109,195
914	HAUL ROAD STORM WATER	gpd	2,060	2,060	2,060	2,060	2,060	2,060	2,060	2,060	2,060	2,060
915	EXCAVATION PUMPS	gpd	22,638	30,097	31,090	72,404	94,465	99,548	100,470	126,174	127,657	111,255
916	WASTE PIT 5 STORM WATER	gpd	11,169	11,169	11,169	11,169	11,169	11,169	11,169	11,169	8,153	6,242
917	WASTE PIT 6 STORM WATER	gpd	2,210	2,210	2,210	2,210	2,210	2,210	2,210	0	0	0
918	SWM POND COLLECTION BASINS	gpd	9,820	9,820	9,820	9,820	9,820	9,820	9,820	9,820	9,820	9,820
919	SWM POND EFFLUENT	gpd	17,470	17,470	17,470	17,470	17,470	17,470	17,470	17,470	17,470	17,470
920	WASTE PIT 4 N.C. STORM WATER	gpd	4,480	4,480	4,480	4,480	2,598	2,598	2,538	2,538	2,538	2,538
921	OTHER WASTE PIT N.C. STORM WATER	gpd	19,791	11,199	8,959	6,719	2,240	1,493	1,493	1,493	1,493	1,493
922	NONCONTACT STORM WATER OUTSIDE PITS	gpd	10,290	10,290	10,290	10,290	10,290	10,290	10,290	10,290	10,290	10,290
923	ROOF DRAINS	gpd	7,650	7,650	7,650	7,650	7,650	7,650	7,650	7,650	7,650	7,650
924	CLEARWELL TRANSFER PUMP	gpd	121,103	125,477	126,471	167,784	199,248	194,928	194,805	224,059	222,526	219,650
925	LABORATORY WASTEWATER	gpd	100	100	100	100	100	100	100	100	100	100
926	WATER FROM PITS AWAITING CERTIFICATION	gpd	0	0	0	0	9,403	0	0	6,955	6,955	22,392
658	WATER IN WTS SLUDGE DISCHARGE	gpd	16,368	16,368	16,368	16,368	16,368	16,368	16,368	16,368	16,368	16,368
662	WWTP EFFLUENT	gpd	137,755	142,129	143,123	184,436	215,900	211,580	211,457	240,711	239,178	236,302
664	WWTP BACKWASH	gpd	15,000	15,000	15,000	15,000	15,000	15,000	15,000	15,000	15,000	15,000

PH.=EXCAVATION PHASE AS OUTLINED IN THE EXCAVATION PLAN.

000224

1321

TABLE 1

SITE WATER BALANCE PROCESS FLOW DIAGRAM

(M-90-10-001)

VOLUMETRIC FLOW RATES

NO.	DESCRIPTION	UNITS	PH. 11	PH. 12	PH. 13	PH. 14	PH. 15	PH. 16	PH. 17	PH. 18	PH. 19
515	COOLING TOWER BLOWDOWN	gpd	40,320	40,320	40,320	40,320	40,320	40,320	40,320	40,320	40,320
559	OIL/WATER SEPARATOR DISCHARGE	gpd	47,520	47,520	47,520	47,520	47,520	47,520	47,520	47,520	47,520
901	LAUNDRY WATER	gpd	750	750	750	750	750	750	750	750	750
902	RESPIRATOR WASH WATER	gpd	100	100	100	100	100	100	100	100	100
903	DECON SHOWERS	gpd	860	860	860	860	860	860	860	860	860
904	GWCT TRANSFER PUMP	gpd	1,710	1,710	1,710	1,710	1,710	1,710	1,710	1,710	1,710
905	MATERIAL HANDLING BLDG SUMPS	gpd	16,000	16,000	16,000	16,000	16,000	16,000	16,000	16,000	16,000
906	RAILCAR LOADOUT BLDG SUMPS	gpd	1,200	1,200	1,200	1,200	1,200	1,200	1,200	1,200	1,200
907	DRYER ENCLOSURE SUMP	gpd	1,000	1,000	1,000	1,000	1,000	1,000	1,000	1,000	1,000
908	MHBCT TRANSFER PUMP	gpd	18,200	18,200	18,200	18,200	18,200	18,200	18,200	18,200	18,200
909	DECON PAD WATER	gpd	1,500	1,500	1,500	1,500	1,500	1,500	1,500	1,500	1,500
910	TRUCK TURN-AROUND AREA STORM WATER	gpd	1,800	1,800	1,800	1,800	1,800	1,800	1,800	1,800	1,800
911	TRUCK WASH SUMP	gpd	1,000	1,000	1,000	1,000	1,000	1,000	1,000	1,000	1,000
912	CLEARWELL STORM WATER	gpd	1,941	1,941	1,941	1,941	1,941	1,941	1,941	0	0
913	EXCAVATION WATER	gpd	112,406	56,189	63,230	109,598	122,659	114,984	19,930	15,336	0
914	HAUL ROAD STORM WATER	gpd	2,060	2,060	2,060	2,060	2,060	2,060	2,060	2,060	2,060
915	EXCAVATION PUMPS	gpd	114,466	58,249	65,290	111,658	124,719	117,044	21,990	17,396	2,060
916	WASTE PIT 5 STORM WATER	gpd	5,794	4,569	4,241	2,598	2,568	1,672	0	0	0
917	WASTE PIT 6 STORM WATER	gpd	0	0	0	0	0	0	0	0	0
918	SWM POND COLLECTION BASINS	gpd	9,820	9,820	9,820	9,820	9,820	9,820	9,820	9,820	9,820
919	SWM POND EFFLUENT	gpd	17,470	17,470	17,470	17,470	17,470	17,470	17,470	17,470	17,470
920	WASTE PIT 4 N.C. STORM WATER	gpd	2,538	2,329	2,329	0	0	0	0	0	0
921	OTHER WASTE PIT N.C. STORM WATER	gpd	1,493	0	0	0	0	0	0	0	0
922	NONCONTACT STORM WATER OUTSIDE PITS	gpd	10,290	10,290	10,290	10,290	10,290	10,290	10,290	10,290	10,290
923	ROOF DRAINS	gpd	7,650	7,650	7,650	7,650	7,650	7,650	7,650	7,650	7,650
924	CLEARWELL TRANSFER PUMP	gpd	222,413	199,560	183,881	237,434	215,876	207,305	205,488	190,040	188,326
925	LABORATORY WASTEWATER	gpd	100	100	100	100	100	100	100	100	100
926	WATER FROM PITS AWAITING CERTIFICATION	gpd	22,392	56,981	34,589	43,416	8,827	8,827	103,738	94,824	108,446
658	WATER IN WTS SLUDGE DISCHARGE	gpd	16,368	16,368	16,368	16,368	16,368	16,368	16,368	16,368	16,368
662	WWTP EFFLUENT	gpd	239,065	216,212	200,533	254,086	232,528	223,957	222,140	206,692	204,978
664	WWTP BACKWASH	gpd	15,000	15,000	15,000	15,000	15,000	15,000	15,000	15,000	15,000

000225

PH.=EXCAVATION PHASE AS OUTLINED IN THE EXCAVATION PLAN.

1321

Site Plans

DRAFT

Waste Pits Remedial Action Project (WPRAP) Site Plans

***

PREPARED
for
Fluor Daniel Fernald, Inc.
Fernald, Ohio

FDF Subcontract No. 98SC000001

***

PREPARED
by
IT Corporation
2790 Mosside Boulevard
Monroeville, PA 15146-2790

IT Project No. 773481

***

Revision B
Issue Date: February 13, 1998

Drawing List

Drawing No.	Rev. No.	Description
M-00-02-001	B	Overall Site Facilities Map
M-90-02-001	B	Site Facilities Layout

General Arrangement Plans

DRAFT

Waste Pits Remedial Action Project (WPRAP) General Arrangement Plan(s)

***

PREPARED
for
Fluor Daniel Fernald, Inc.
Fernald, Ohio

FDF Subcontract No. 98SC000001

***

PREPARED
by
IT Corporation
2790 Mosside Boulevard
Monroeville, PA 15146-2790

IT Project No. 773481

***

Revision B
Issue Date: January 13, 1998

Drawing List

Drawing No.	Rev. No.	Description
M-15-02-001	B	Pre-Engineered Buildings General Arrangement Plan
M-15-02-002	B	Material Handling and Dryer Building General Arrangement Plan
M-15-02-003	B	Material Handling and Dryer Building General Arrangement Elevations and Sections
M-35-02-001	B	Railcar Loadout and Railcar Prep/Liner Storage Buildings General Arrangement Plan
M-35-02-002	B	Railcar Loadout and Railcar Prep/Liner Storage Buildings General Arrangement Elevations and Sections
M-65-02-001	B	Wastewater Treatment System Plant General Arrangement Plan
M-90-02-002	B	Dryer Process Area Equipment General Arrangement Plan
M-90-02-003	B	Dryer Process Area Equipment Elevations and Sections

DRAWING NUMBER 773481-M3

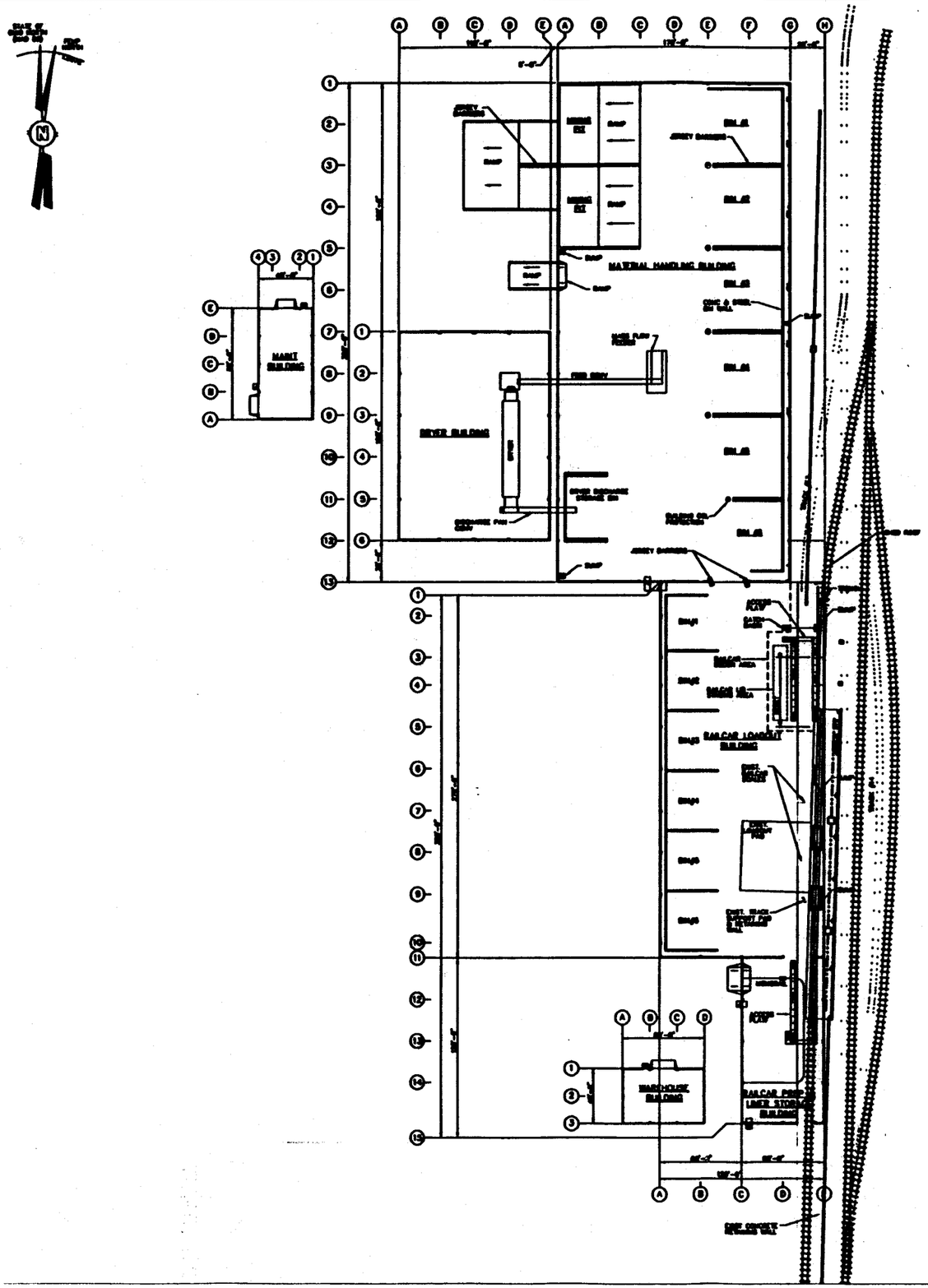

GENERAL BUILDING NOTES

1. THE BUILDING VENDOR SHALL PROVIDE DESIGN, FABRICATION, AND ERECTION SERVICES FOR THE PRE-ENGINEERED BUILDING AND FOUNDATION.
2. THE APPLICABLE BUILDING CODE IS THE OHIO BASIC BUILDING CODE (OBBC), LATEST EDITION, AND THE METAL BUILDING MANUFACTURERS ASSOCIATION (MBMA) LOW RISE BUILDING DESIGN MANUAL. WHERE CONFLICTS EXIST, THE OBBC SHALL GOVERN.
3. THE STRUCTURE IS TO BE DESIGNED FOR THE FOLLOWING LOADING CRITERIA:

DEAD LOAD	AS CALCULATED
ROOF LIVE LOAD	20 PSF
WIND LOAD	
BASIC WIND	90 MPH
EXPOSURE	C
IMPORTANCE FACTOR	1.0
SNOW LOAD	
GROUND SNOW LOAD	30 PSF
FLAT ROOF SNOW	21 PSF
IMPORTANCE FACTOR	1.0
SEISMIC	PER OBBC

4. THE BUILDING VENDOR SHALL SUBMIT DESIGN DRAWINGS AND CALCULATIONS BEARING THE SEAL OF A PROFESSIONAL ENGINEER REGISTERED IN THE STATE OF OHIO FOR APPROVAL.

000232

REFERENCE DWG'S.

M-15-02-002	MATERIAL HANDLING BUILDING GENERAL ARRANGEMENT - PLAN
M-15-02-003	RAILCAR LOADOUT & RAILCAR PREP/LIMIT STORAGE BUILDING GENERAL ARRANGEMENT - PLAN
M-15-02-004	WAREHOUSE BUILDING - PLAN AND ELEVATIONS
M-15-02-005	MAINTENANCE BUILDING - PLAN AND ELEVATIONS

FLUOR DANIEL FERNALD

FLUOR DANIEL FERNALD ENVIRONMENTAL MANAGEMENT PROJECT FERNALD, OHIO

DOE DOE CONTRACT NO. 000000000

PROJECT NAME: WASTE PITS REMEDIAL ACTION PROJECTS

TITLE: PRE-ENGINEERED BUILDINGS GENERAL ARRANGEMENT PLAN

INTERNATIONAL TECHNOLOGY CORPORATION

... Creating a Safer Tomorrow

DESIGNED BY	PJ	CHECKED BY	PJ	1/8/99	REVISION
DRAWN BY	JCS	APPROVED BY			
DATE	12-10-97	DWG. SCALE	1/32" = 1'-0"		B
IT PROJECT NO.	773481	DRAWING NO.	M-15-02-001		

REV	DATE	BY	CHKD	APP'D	DESCRIPTION
B	1/8/99				DRAFT ISSUE FOR EPA REVIEW
A	1/6/99				GENERAL ISSUE OF DRAFT

DRAWING NUMBER 773481-M4

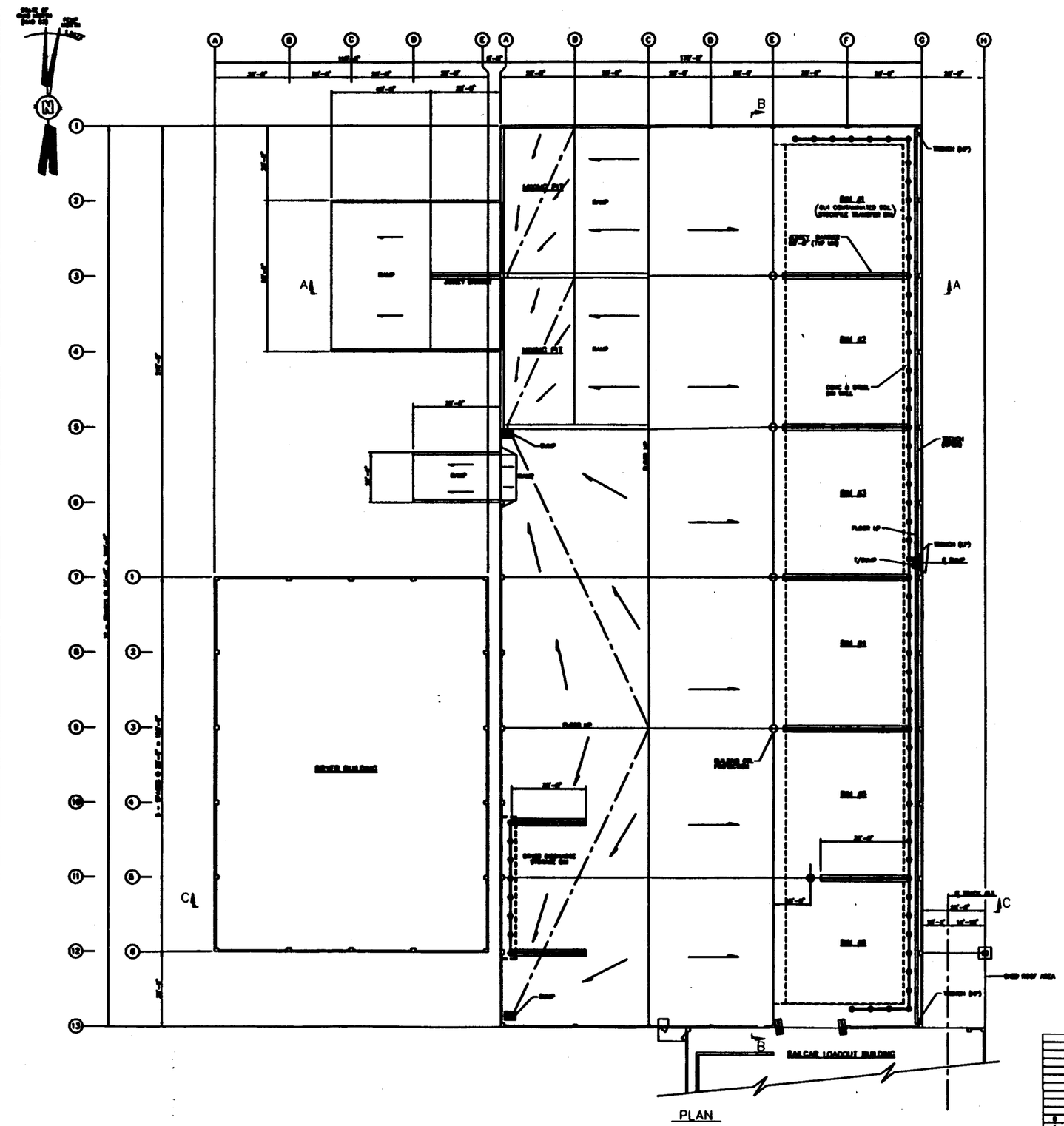

000233

REFERENCE DWG'S.

M-15-02-001	PRE-ENGINEERED BUILDINGS GENERAL ARRANGEMENT - PLAN
M-15-02-003	BUILDING - ELEVATIONS & SECTIONS
M-15-01-001	MATERIAL HANDLING BUILDING FLOOR SLAB - PLAN
M-35-02-001	RAILCAR LOADOUT BUILDING GENERAL ARRANGEMENT - PLAN

FLUOR DANIEL FERNALD

FLUOR DANIEL FERNALD ENVIRONMENTAL MANAGEMENT PROJECT FERNALD, OHIO

REF. DOE CONTRACT NO. [illegible]

PROJECT NAME: WASTE PITS REMEDIAL ACTION PROJECTS

TITLE: MATERIAL HANDLING AND DRYER BUILDING GENERAL ARRANGEMENT PLAN

INTERNATIONAL TECHNOLOGY CORPORATION

... Creating a Safer Tomorrow

DESIGNED BY	FJ	CHECKED BY	FJ	1/9/98
DRAWN BY	JDD	APPROVED BY		
DATE	10-22-97	DWG. SCALE	1/16"=1'-0"	
IT PROJECT NO.	773481	DRAWING NO.	M-15-02-002	

REVISION: B

REV	DATE	BY	CHK'D	APV'D	DESCRIPTION
B	[illegible]				[illegible]
A	1/9/98				[illegible]

DRAWING NUMBER 773481-M5

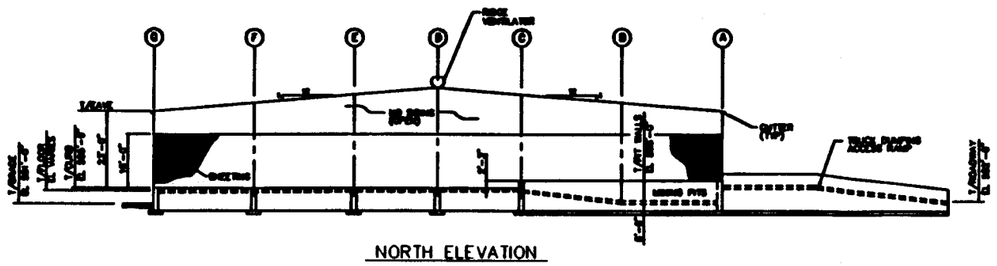

NORTH ELEVATION

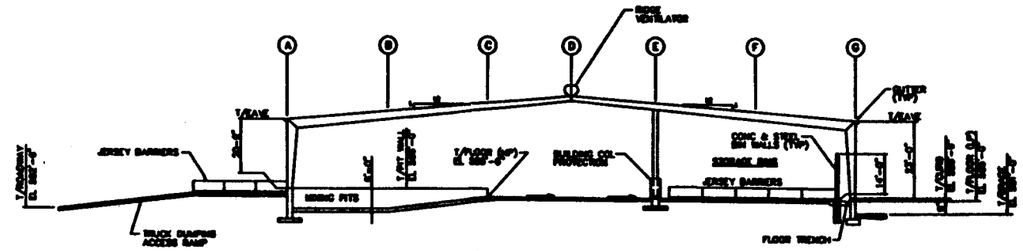

SECTION A – A

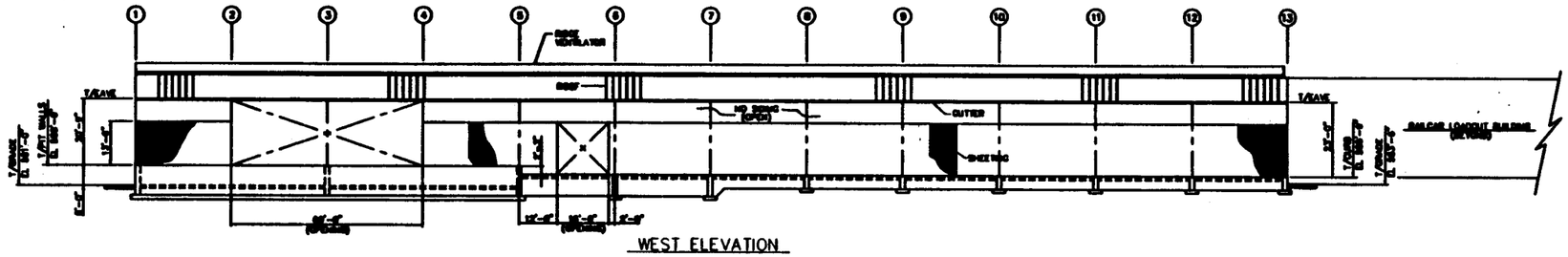

WEST ELEVATION

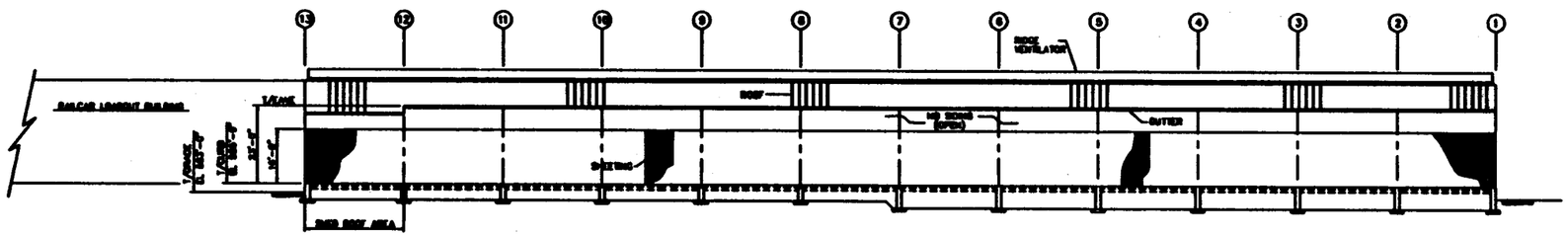

EAST ELEVATION

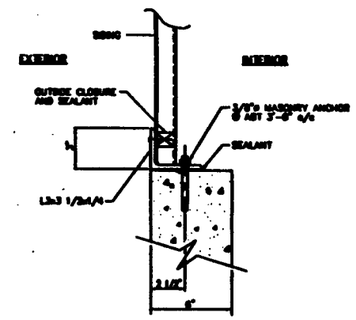

TYPICAL CURB ANGLE DETAIL
SCALE: 3" = 1'-0"

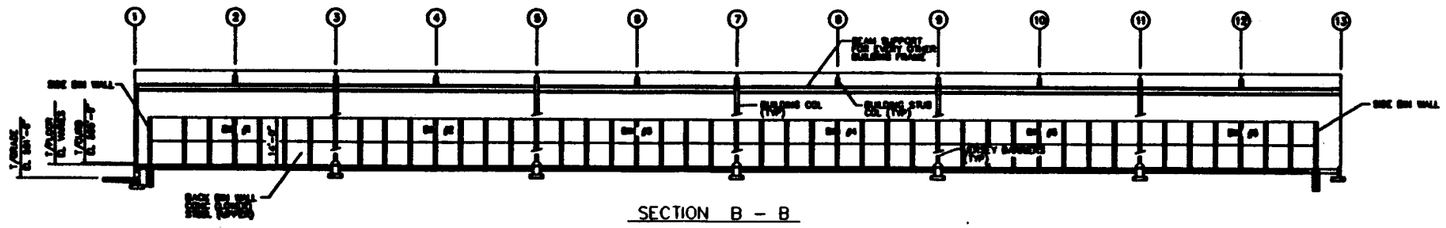

SECTION B – B

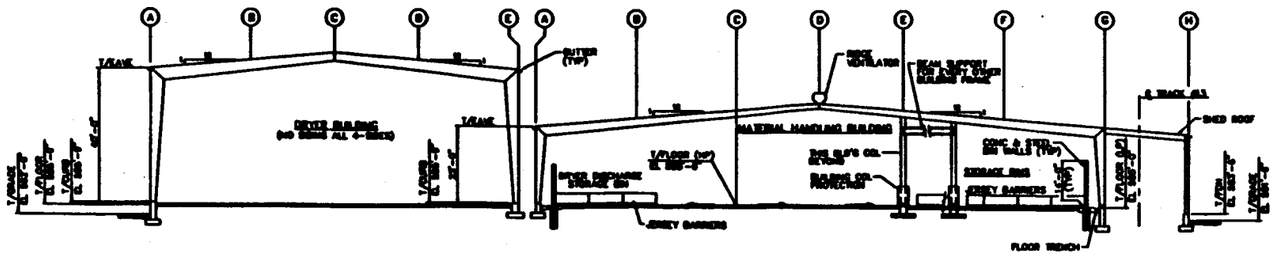

SEC. TRACK (E.)

SECTION C – C

REFERENCE DWG'S.

M-15-02-002 BUILDING GENERAL ARRANGEMENT – PLAN

000234

REV	DATE	BY	CHK'D	APP'D	DESCRIPTION
B	3/4/93				DRAFT ISSUE FOR EPA REVIEW
A	1/6/93				GENERAL ISSUE OF DRAFT

FLUOR DANIEL FERNALD

FLUOR DANIEL FERNALD ENVIRONMENTAL MANAGEMENT PROJECT FERNALD, OHIO

DOE DOE CONTRACT NO. DE-AC05-92OR21860

PROJECT NAME: WASTE PITS REMEDIAL ACTION PROJECTS

TITLE: MATERIAL HANDLING & DRYER BUILDING GENERAL ARRANGEMENT ELEVATIONS AND SECTIONS

INTERNATIONAL TECHNOLOGY CORPORATION

... Creating a Safer Tomorrow

DESIGNED BY	PJ	CHECKED BY	PJ	1/6/93
DRAWN BY	JEG	APPROVED BY		
DATE	10-10-07	DWG. SCALE	1/16"=1'-0"	
F PROJECT NO.	773481	DRAWING NO.	M-15-02-003	

REVISION: B

DRAWING NUMBER 773481-M6

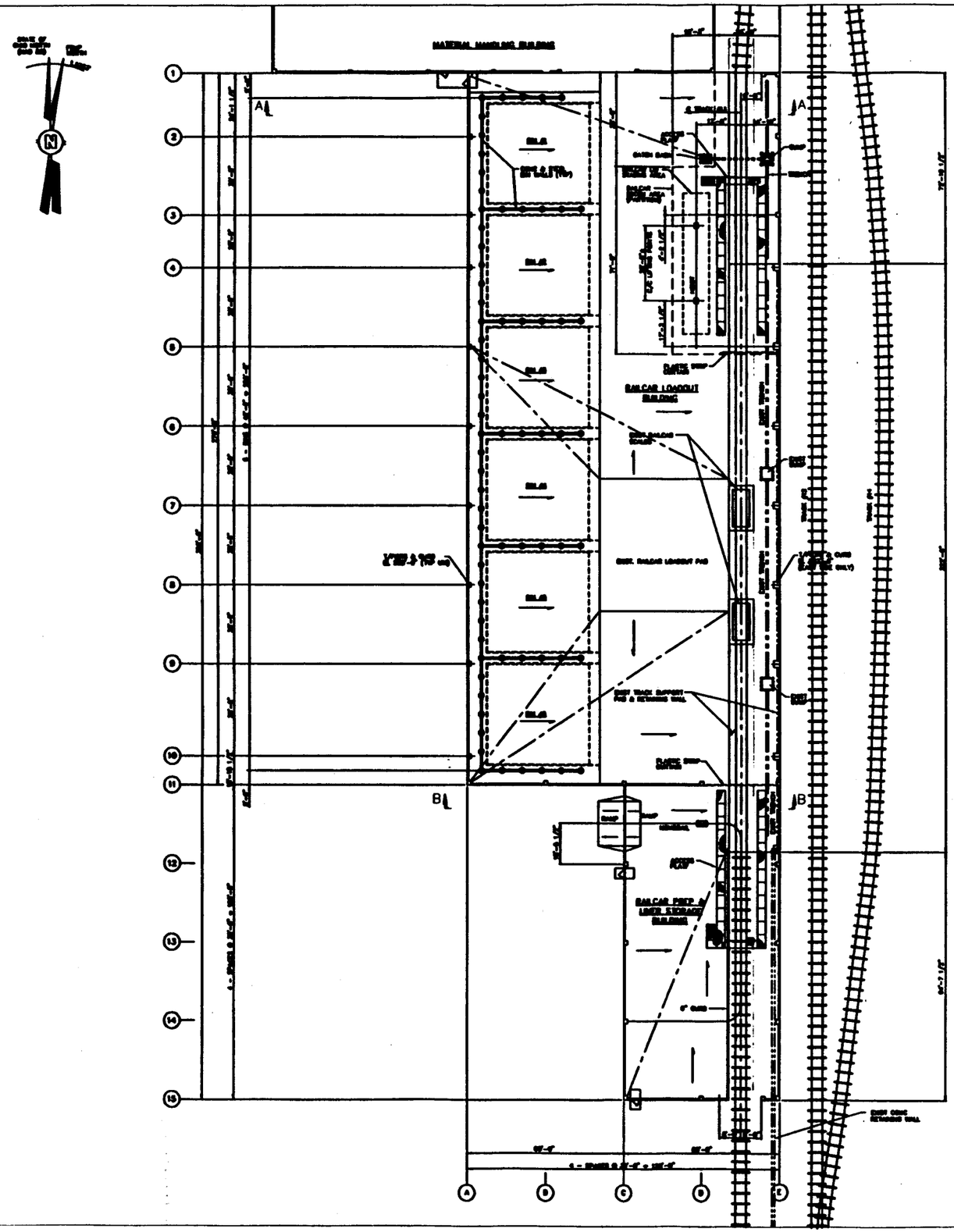

000235

REFERENCE DWG'S.

M-16-00-001	PRE-DESIGNED BUILDINGS GENERAL ARRANGEMENT - PLAN
M-35-00-002	BUILDING - ELEVATIONS & SECTIONS
M-35-01-001	RAILCAR LOADOUT BUILDING FLOOR SLAB - PLAN
M-16-00-002	MATERIAL HANDLING BUILDING GENERAL ARRANGEMENT - PLAN

FLUOR DANIEL FERNALD

FLUOR DANIEL FERNALD ENVIRONMENTAL MANAGEMENT PROJECT FERNALD, OHIO

DOE DOE CONTRACT NO. [illegible]

PROJECT TITLE: WASTE PITS REMEDIAL ACTION PROJECTS

TITLE: RAILCAR LOADOUT & RAILCAR PREP/LINER STORAGE BUILDINGS - GENERAL ARRANGEMENT PLAN

INTERNATIONAL TECHNOLOGY CORPORATION

... Creating a Safer Tomorrow

DESIGNED BY	PJ	CHECKED BY	PJ	1/6/98	REVISION
DRAWN BY	JD	APPROVED BY			
DATE	10-10-97	DWG. SCALE	1/16"=1'-0"		B
IT PROJECT NO.	773481	DRAWING NO.	M-35-02-001		

REV	DATE	BY	CHKD	APV'D	DESCRIPTION
B	2/13/98				DRAFT ISSUE FOR EPA REVIEW
A	1/6/98				GENERAL ISSUE OF DRAFT

DRAWING NUMBER 773481-M7

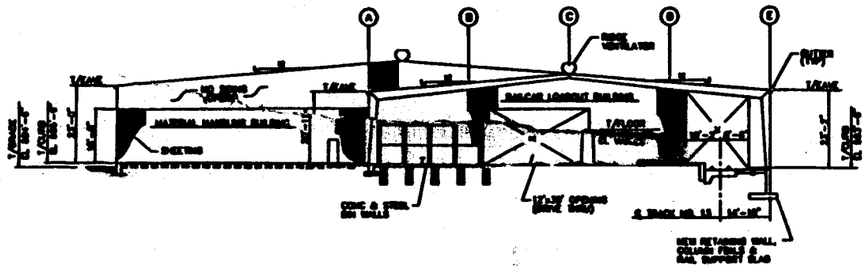

SECTION A - A

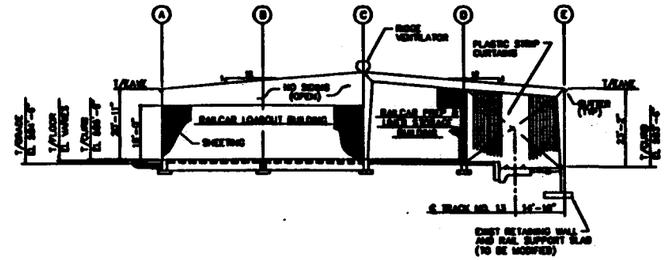

SECTION B - B

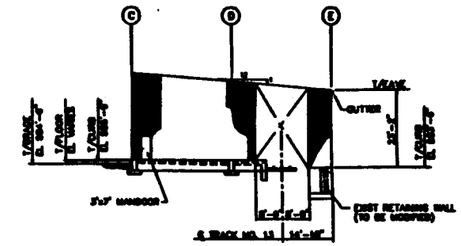

SOUTH ELEVATION

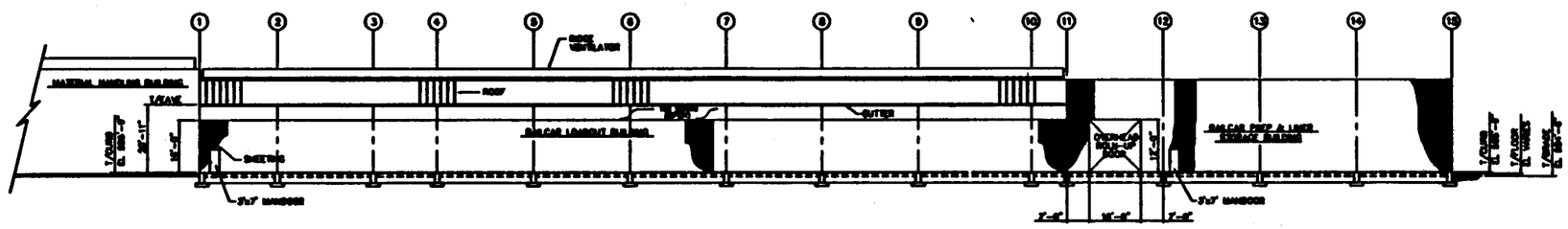

WEST ELEVATION

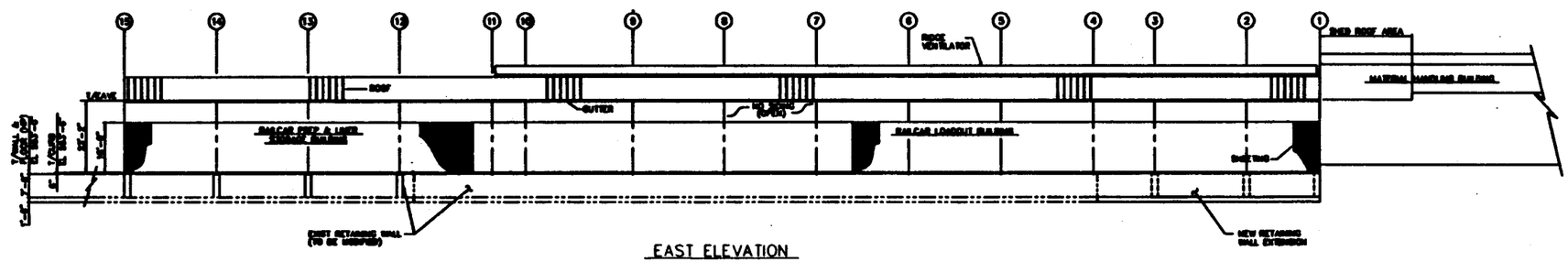

EAST ELEVATION

000236

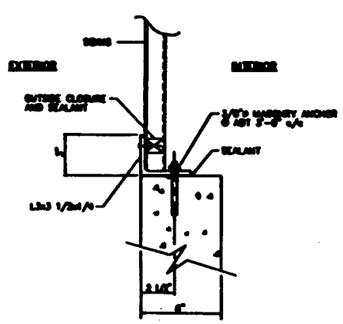

TYPICAL CURB ANGLE DETAIL
SCALE: 3" = 1'-0"

REFERENCE DWG'S.
16-35-02-001 RAILCAR LOADOUT BUILDING GENERAL ARRANGEMENT - PLAN

REV	DATE	BY	CHK'D	APP'D	DESCRIPTION
B	1/5/99				DRAFT ISSUE FOR DOE REVIEW
A	1/5/99				GENERAL ISSUE OF DRAFT

FLUOR DANIEL FERNALD
FLUOR DANIEL FERNALD ENVIRONMENTAL MANAGEMENT PROJECT FERNALD, OHIO

PROJECT TITLE: WASTE PITS REMEDIAL ACTION PROJECTS

TITLE: RAILCAR LOADOUT & RAILCAR PREP/LINER STORAGE BUILDINGS - GENERAL ARRANGEMENT ELEVATIONS AND SECTIONS

INTERNATIONAL TECHNOLOGY CORPORATION
... Creating a Safer Tomorrow

DESIGNED BY	PJ	CHECKED BY	PJ	1/5/99
DRAWN BY	JCD	APPROVED BY		
DATE	10-15-97	DWG. SCALE	1/16"=1'-0"	
F PROJECT NO.	773481	DRAWING NO.	16-35-02-002	

REVISION: B

DRAWING NUMBER 773481-M63

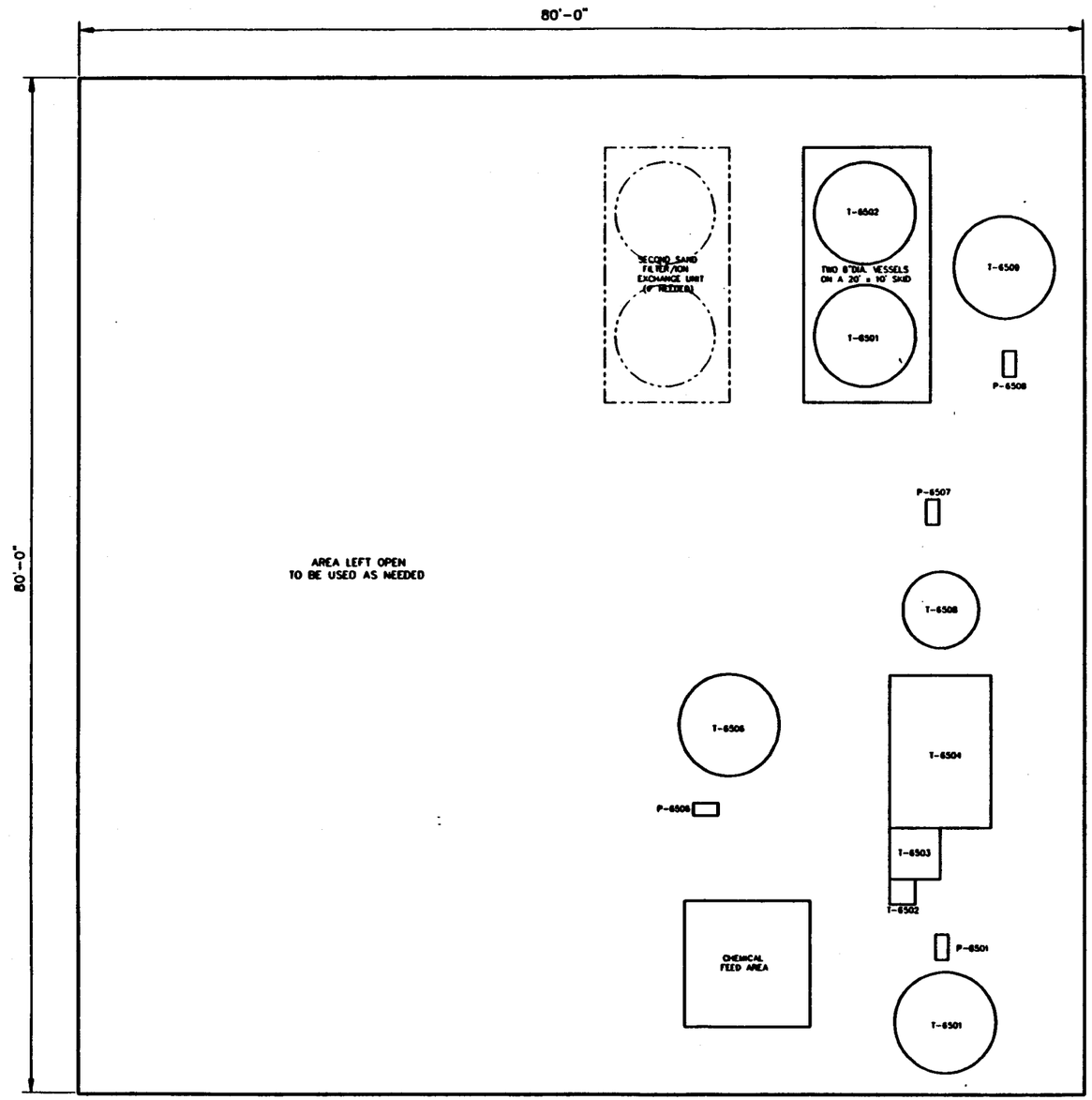

WWTP LAYOUT

SCALE

000237

FLUOR DANIEL FERNALD — WASTE PITS REMEDIAL ACTION PROJECT (WPRAP) FERNALD, OHIO FWP SUBCONTRACT NO. 5900000001

PROJECT NAME: WASTE PITS REMEDIAL ACTION PROJECT (WPRAP)

TITLE: AREA 65 WASTEWATER TREATMENT PLANT GENERAL ARRANGEMENT PLAN

INTERNATIONAL TECHNOLOGY CORPORATION

... Creating a Safer Tomorrow

REV	DATE	BY	CHK'D	APP'D	DESCRIPTION
B	9/17/98	PJG			DRAFT ISSUE FOR EPA REVIEW
A	9/07/98	PJG			ISSUED FOR DRAFT FACILITIES ERC PRC

DESIGNED BY	PJ	CHECKED BY		REVISION
DRAWN BY	JES	APPROVED BY		B
DATE	11-25-97	DWG. SCALE	1"=40'-0"	
IT PROJECT NO	773481	DRAWING NO	M-65-02-001	

DRAWING NUMBER D-90-02-002

1321

N

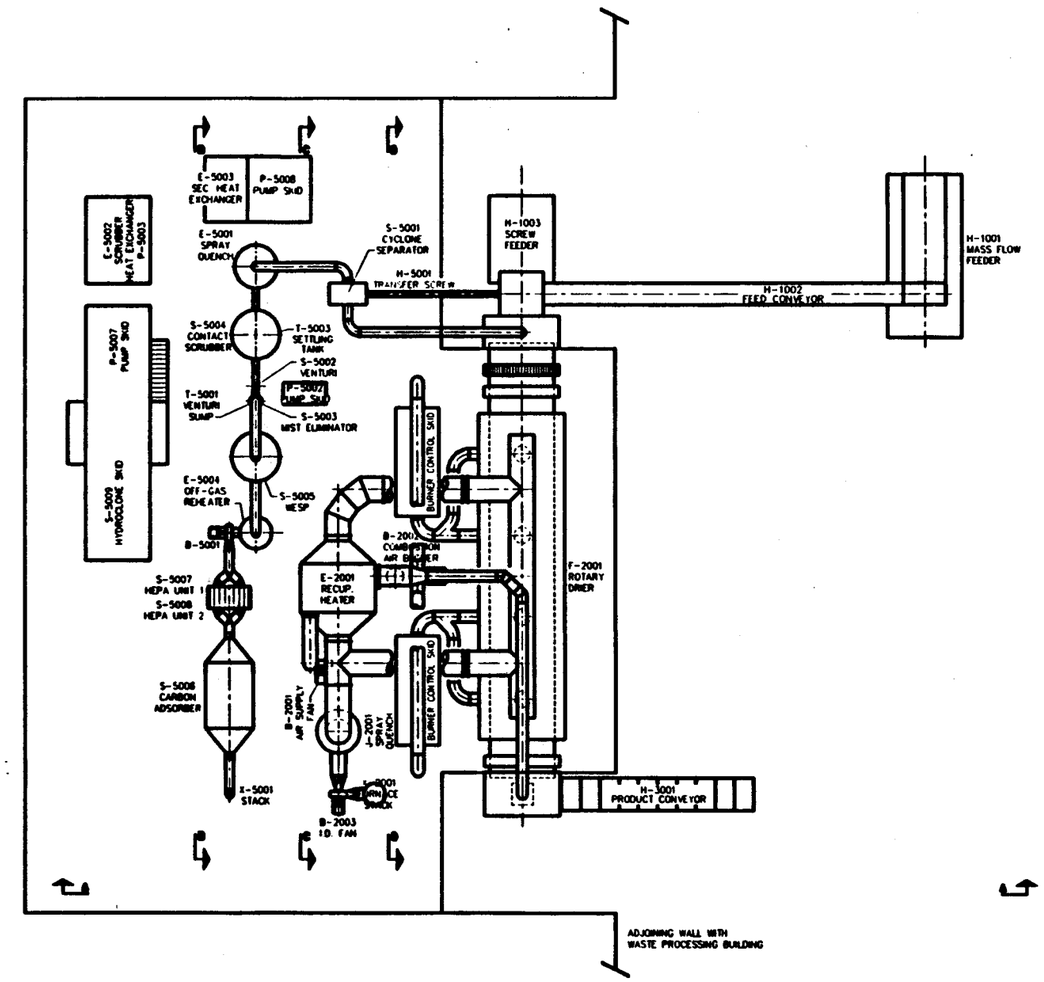

PLAN

000238

REV	DATE	BY	CHK'D	APRV'D	DESCRIPTION
B	2-13-98	MFL	R.A.	CP	DRAFT ISSUE FOR EPA REVIEW
A	1-5-98	MFL	R.A.	CP	ISSUED FOR DRAFT PLANT FACILITIES ENG PKG.

FLUOR DANIEL FERNALD

WASTE PITS REMEDIAL ACTION PROJECT (WPRAP)
FERNALD, OHIO
FDF SUBCONTRACT NO. 883C000001

PROJECT NAME: WASTE PITS REMEDIAL ACTION PROJECT (WPRAP)

TITLE: DRYER PROCESS AREA EQUIPMENT GENERAL ARRANGEMENT PLAN

IT INTERNATIONAL TECHNOLOGY CORPORATION

... *Creating a Safer Tomorrow*

DESIGNED BY	R.A.	CHECKED BY	R.A.		REVISION
DRAWN BY	STC	APPROVED BY	CP		B
DATE	12/22/97	DWG SCALE	1"=10'-0"		
IT PROJECT NO	773481	DRAWING NO	M-90-02-002		

DRAWING NUMBER D-90-02-003

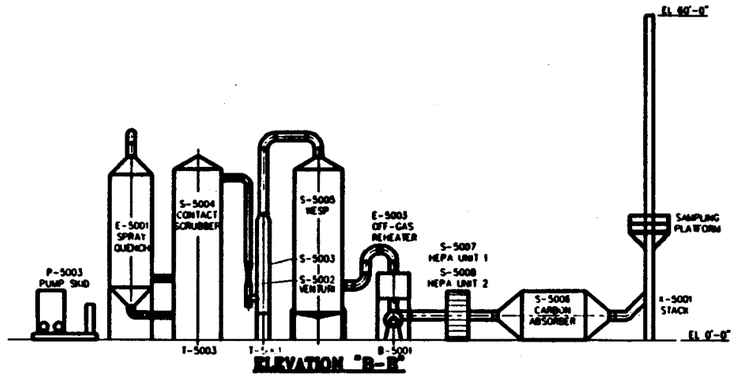

ELEVATION "B-B"

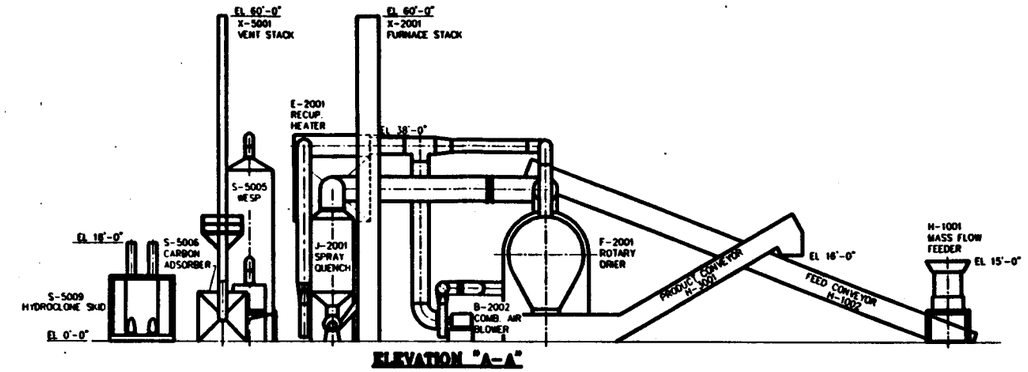

ELEVATION "A-A"

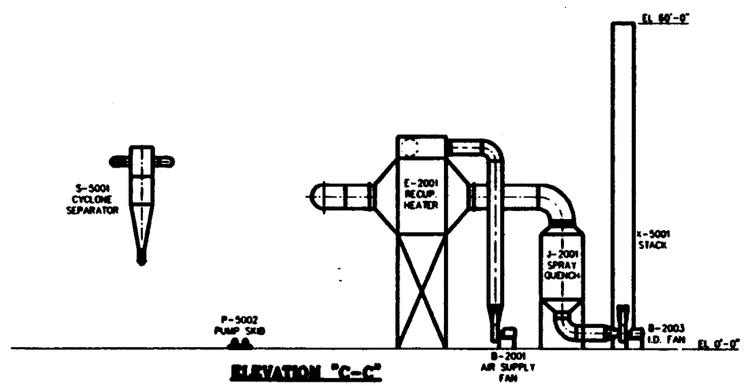

ELEVATION "C-C"

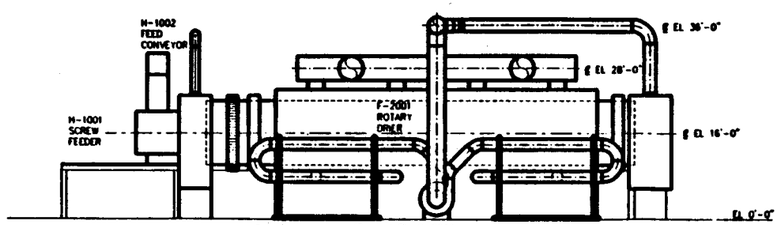

ELEVATION "D-D"

000239

REV	DATE	BY	CHK'D	APPV'D	DESCRIPTION
B	2-13-98	MFL	R.A.	CP	DRAFT ISSUE FOR EPA REVIEW
A	1-5-98	MFL	R.A.	CP	ISSUED FOR DRAFT PLANT FACILITIES ENG. PKG.

FLUOR DANIEL FERNALD

WASTE PITS REMEDIAL ACTION PROJECT (WPRAP)
FERNALD, OHIO
FDF SUBCONTRACT NO. 885C000001

PROJECT NAME: WASTE PITS REMEDIAL ACTION PROJECT (WPRAP)

TITLE: DRYER PROCESS AREA EQUIPMENT ELEVATIONS AND SECTIONS

INTERNATIONAL TECHNOLOGY CORPORATION
... Creating a Safer Tomorrow

DESIGNED BY	R.A.	CHECKED BY	R.A.	REVISION
DRAWN BY	MFL	APPROVED BY	CP	B
DATE	12/31/97	DWG SCALE	1"=10'-0"	
IT PROJECT NO	773481	DRAWING NO	M-90-02-003	

DRAFT

Waste Pits Remedial Action Project (WPRAP) Equipment Data Sheets/Specifications

***

PREPARED
for
Fluor Daniel Fernald, Inc.
Fernald, Ohio

FDF Subcontract No. 98SC000001

***

PREPARED
by
IT Corporation
2790 Mosside Boulevard
Monroeville, PA 15146-2790

IT Project No. 773481

***

Revision B
Issue Date: February 13, 1998

Record of Issue/Revisions

Date	Rev. No.	Description of Issue/Revision
1-9-98	A	Original Issue of Draft
2-13-98	B	Draft Issue for EPA Review

1.0 INTRODUCTION

This section presents the equipment specifications for the process equipment shown on the PFDs and discussed in the Description of the Operation and Process. The specifications describe the process determined features required for the individual equipment items. This description of features includes the performance requirements and the mechanical requirements as appropriate to clarify or describe desirable and necessary features of the equipment. These specifications provide the basic information for preparation of subsequent detailed designs, drawings, and purchase requisitions.

This section includes an equipment list which lists the equipment item, provides the equipment number if appropriate, a brief description of the equipment duty, and the reference to the specification which describes the equipment in more detail. Summary estimated motor horsepowers are provided on the equipment list also.

Specifications are not typically provided in this section for existing equipment. The equipment specifications follow the equipment list in numerical order.

Company Name:	Fluor Daniel Fernald	**Initiated:**	T. Busmann
Project Name:	Waste Pits Remedial Action Project OU-1	**Checked:**	S. Dunham
Location:	Fernald, OH	**Approved:**	C. Murphy
Subcontract No..	98SC000001	**Revision:**	B
Project Number:	773481		

PROCESS EQUIPMENT LIST

Equipment Number		Qty	Equipment Name	Equipment Description	Specification		Motor HP
Area 10 - Dryer Feed System							
	H-1001	1	Mass Flow Screw Feeder	50 tph, multi screw, existing variable speed mass flow screw feeder	11110		
	H-1002	1	Belt Feed Conveyor	50 tph, 30 inch wide, belt conveyor	11110		
	H-1003	1	Dryer Feed Screw	50 tph, 30 inch diameter, minimum 15 ft long, cantilevered single screw	11110		
	Z-1001	1	Belt Scale	50 tph, +/- 0.5% accuracy	11110		
Area 15 - Material Handling Building & Equipment							
		1	Material handling Building	170 ft x 360 ft x 23 ft eave, pre-engineered, rigid steel frame			
		1	Front End Loader	Wheel loader, Diesel Engine, 3 CY bucket			
	H-1504 A/B	2	Vibrator Screen	<4" material, 110 tph			
	M-1501	1	Debris Shredder	Low Speed, Shear Shredder	Existing		150
		1	Dust Suppression Spray System				
	H-1506	1	Magnetic Separator				
Area 20 - Dryer							
	B-2001	1	Air Supply Fan	Centrifugal Blower, Sizing TBD by Vendor	11182		75
	B-2002	1	Combustion Air Fan	Centrifugal High Pressure Blower, Sizing TBD by Vendor	11182		100
	B-2003	1	Furnace Induced Draft Fan	Centrifugal Blower, Sizing TBD by Vendor, 10/1 turndown	11182		30
	F-2001	1	Rotary Dryer	Size TBD by vendor, alloy drum, 1600 F design temp.	11182		
	E-2001	1	Recuperative Heater	Countercurrent air to air heater, Flows TBD by Vendor	11182		
	J-2001	1	Spray Quench	Upflow, downspray evaporative quench, Dimensions TBD by Vendor	11182		
	X-2001	1	Furnace Stack	60 ft high, Flowrate and Diameter TBD by Vendor	11182		
Area 30 - Dryer Product Handling System							
	H-3001	1	Product Conveyor	2-30 tph, C.S.	11112		20
Area 35 - Railcar Loadout / Lid Building & Equipment							
		1	Railcar Filling Skirt	Fabrication w/ positioner			
		1	Railcar Lid Service Crane	Overhead monorail crane for lid & debris placement, 4 ton			
		1	Railcar Lid Service Crane	Bridge crane for lid & debris placement, 4 ton			
		1	Railcar Loadout Building	120 ft x 240 ft x 23 ft eave, pre-engineered, rigid steel frame			
		1	Rail Car Scale	Provided by FDF			
		1	Front End Loader	Wheel loader, Diesel Engine, 3 CY bucket			
			Decontamination hoses and nozzles				
			Water Mist Dust Suppression System				
Area 50 - Gas Cleaning System							
	B-5001	1	Induced Air Fan	Centrifugal Fan (3400-5200 cfm @ 56" w.c.) variable speed drive	15860		

Company Name:	Fluor Daniel Fernald	**Initiated:**	T. Busmann
Project Name:	Waste Pits Remedial Action Project OU-1	**Checked:**	S. Dunham
Location:	Fernald, OH	**Approved:**	C. Murphy
Subcontract No..	98SC000001	**Revision:**	B
Project Number:	773481		

PROCESS EQUIPMENT LIST

Equipment Number	Qty	Equipment Name	Equipment Description	Specification		Motor HP
E-5001	1	Spray Quench	Spray Quench with 1000 gpm water input through atomizing nozzles	15930		
E-5002	1	Heat Exchanger	24 MMBtu/hr heat transfer with 1000 gpm water throughput on process side	15751		
E-5004	1	Off-Gas Reheater	155,000 Btu/hr gas stream reheater, electrical resistance	15750		
E-5003	1	Contact Scrubber Heat Exchanger	2.5 MMBtu/hr heat transfer with 110 gpm water throughput on process side	15752		
H-5001	1	Cyclone Solids Transfer Screw	Screw conveyor to remove up to 1200 lbs/hr from cyclone hopper	15885		
P-5001A,B	2	Cooling Water Recirc Pumps	Centrifugal pumps rated for 3,300 gpm @ 50 psig to service the cooling to	15150		100
P-5002A,B	2	Venturi Recirc. Pumps	Centrifugal pump rated for 50 gpm @ 100 psig	15150		5
P-5003A,B	2	Contact Scrubber Recirc Pumps	Centrifugal pumps rated for 130 gpm @ 100 psig	15150		10
P-5006A,B	1	Scrubber Caustic Metering Pumps	Metering pumps rated for 1 gpm @ 50 psig	15150		1
P-5008A,B	2	Spray Quench Recirc Pumps	Centrifugal pumps rated for 1000 gpm @ 100 psig	15150		60
P-5009A,B	1	Quench Caustic Metering Pumps	Metering pumps rated for 1 gpm @ 50 psig	15150		1
P-5010A,B	2	Contact Scrubber Chiller Recirc Pumps	Centrifugal pumps rated for 2 gpm @ 50 psig	15150		1
P-5011	1	Overflow Sump Pump	Centrifugal pumps rated for 30 gpm @ 50 psig	15150		1
S-5001	1	High Efficiency Cyclone Separator	Multiclone rated for 7270 to 17000 ACFM, 90 % overall removal	15883		
S-5002	1	Venturi Scrubber	2800-5200 ACFM venturi with 10" w.c. pressure drop across throat	15932		
S-5003	1	Mist Eliminator	2800-5200 ACFM mist eliminator to service the venturi scrubber	15932		
S-5004	1	Contact Scubber	2.7 MMBtu/hr heat transfer with 500 gpm water throughput	15933		
S-5005	1	Wet Electrostatic Precipitator (WESP)	99.9 removal efficiency WESP at 3600 ACFM @ 80 F	15934		
S-5006	1	Carbon Adsorber	3500-5300 ACFM carbon adsorber for radon control	15884		
S-5007	1	HEPA Filter Unit 1	99.97 removal at 0.3 micron 3500-5300 ACFM HEPA	15863		
S-5008	1	HEPA Filter Unit 2	99.97 removal at 0.3 micron 3500-5300 ACFM HEPA	15863		
T-5001	1	Contact Scrubber Sump	5000 gallon carbon steel tank for collection & recirculation of venturi water	13200		
T-5002	1	Caustic Tank	500 gallon epoxy coated carbon steel containing 20 % NaOH	13200		
T-5003	1	Settling Tank	30,000 gallon epoxy coated steel tank for settling of particulate & organics	13200		
T-5004	1	Overflow Sump	1,000 gallon epoxy coated steel tank for capture of Settling Tank Overflow	13200		
W-5001	1	Cooling Tower	25 MMBtu/hr cooling tower(s) for removal of heat from dryer offgas	15712		
X-5001	1	Vent Stack	Gas Cleaning System exhaust point, 60' height, approx. 18 " dia.	15939		
Z-5001	1	Contact Scrubber Recirc Chiller	2.5 MMBtu/hr chiller	15620		
Area 60 - Process Blowdown Pretreatment System						
P-6001A	1	Hydroclone Recirc Pump Bank A	Centrifugal pumps rated for 500 gpm @ 100 psig	15150		30
P-6001B	1	Hydroclone Recirc Pump Bank B	Centrifugal pumps rated for 500 gpm @ 100 psig	15150		30
P-6002	2	Clarfier Sludge Pumps	Centrifugal pumps rated for 60 gpm @ 50 psig	15150		2
P-6003A,B	2	Clarfier Overflow Pumps	Centrifugal pumps rated for 75 gpm @ 50 psig	15150		2
P-6022A,B	2	Oil/Water Seperator Waste Oil Pumps	Centrifugal pumps rated for 2 gpm @ 50 psig	15150		1
P-6023A,B	2	Oil/Water Seperator Waste Water Pumps	Centrifugal pumps rated for 60 gpm @ 50 psig	15150		2
P-6024A,B	2	Oil/Water Seperator Sludge Pumps	Centrifugal pumps rated for 30 gpm @ 50 psig	15150		1

000244

1321

Company Name:	Fluor Daniel Fernald		**Initiated:** T. Busmann
Project Name:	Waste Pits Remedial Action Project OU-1	**PROCESS EQUIPMENT LIST**	**Checked:** S. Dunham
Location:	Fernald, OH		**Approved:** C. Murphy
Subcontract No..	98SC000001		**Revision:** B
Project Number:	773481		

Equipment Number	Qty	Equipment Name	Equipment Description	Specification		Motor HP
S-6001A-G	1	Hydroclone System Bank A	500 gpm hydroclone system to filter particulate from condensate	15931		
S-6002A-G	1	Hydroclone System Bank B	500 gpm hydroclone system to filter particulate from condensate	15931		
S-6004	1	Clarifier				
T-6001	1	Clarfier Overflow Tank	1,500 gallon fiberglass tank for capture of Clarifier Overflow	13200		
Z-6020	1	Oil/Water Seperator	9 GPM , oil/water corrugated plate coalescer	15936		
Area 65 - Water Treatment System						
M-6501	1	Static Mixer	PVC	13400		
M-6502	1	Flash Mixer	316 Stainless Steel	13400		
M-6503	1	Flocculation Mixer	316 Stainless Steel	13400		
M-6504	1	Coagulant Mixer	316 Stainless Steel	13400		
M-6505	1	Polymer Mixer	316 Stainless Steel	13400		
P-6501	1	Clarifier Feed Pump	Horizontal Centrifigul, Cast Iron, 250 GPM	13400		
P-6502	1	Caustic Metering Pump	Metering Pump, 0 - 30 GPH	13400		
P-6503	1	Clarifier Sludge Pump	Progressive Cavity, Cast Iron, 100 GPM	13400		
P-6504	1	Coagulant Metering Pump	Metering Pump, 0 - 30 GPH	13400		
P-6505	1	Polymer Metering Pump	Metering Pump, 0 - 5 GPH	13400		
P-6506	1	Sludge Transfer Pump	Progressive Cavity, Cast Iron, 100 GPM	13400		
P-6507	1	Filter Feed Pump	Horizontal Centrifugal, Cast Iron, 250 GPM	13400		
P-6508	1	Effluent Pump	Centrifugal, Cast Iron, 500 GPM	13400		
P-6509	1	Acid Metering Pump	Metering Pump, 0 - 30 GPH	13400		
P-6510	1	Waste Water Treatment System Sump Pump	Submersible Sump Pump, Cast Iron, 20 GPM	13400		
T-6501	1	Influent Tank	5000 Gallons, Coated Carbon Steel or FRP	13400		
T-6502	1	Flash Mix Tank	Coated Carbon Steel	13400		
T-6503	1	Flocculation Tank	Coated Carbon Steel	13400		
T-6504	1	Inclined Plate Clarifier	Coated Carbon Steel	13400		
T-6505	1	Coagulant Feed Tank	500 Gallons, FRP or HDPE	13400		
T-6506	1	Polymer Feed Tank	500 Gallons, FRP or HDPE	13400		
T-6507	1	Sludge Holding Tank	5000 Gallons, Carbon Steel	13400		
T-6508	1	Clarifier Overflow Tank	5000 Gallons, HDPE, FRP or Carbon Steel	13400		
T-6509	1	Effluent Tank	5000 Gallons, Coated Carbon Steel	13400		
F-6501	1	Sand Filter	8' Diameter, 250 GPM, Carbon Steel, Filter Media Sand & Gravel	13400		
F-6502	1	Ion Exchange Unit	8' Diameter, 250 GPM, Carbon Steel, Dowex 21KXLT Anion Resin	13400		
Area 70 - Utilities						
Z-7001	1	Air Compressor System	Electric Driven, 880 SCFM, 150 psig max.			
V-7001	1	Plant Air Receiver	6000 gal, 150 psig			
Z-7002	1	Instrument Air Dryer	200 SCFM @150 psig			

Company Name:	Fluor Daniel Fernald	**Initiated:**	T. Busmann
Project Name:	Waste Pits Remedial Action Project OU-1	**Checked:**	S. Dunham
Location:	Fernald, OH	**Approved:**	C. Murphy
Subcontract No..	98SC000001	**Revision:**	B
Project Number:	773481		

PROCESS EQUIPMENT LIST

Equipment Number		Qty	Equipment Name	Equipment Description	Specification		Motor HP
	V-7002	1	Instrument Air Receiver	1000 gal, 150 psig			
	T-7002	1	Fuel Oil Tank	20,000 gal capacity, carbon steel			
	P-7002A,B	2	Fuel Oil Feed Pump	Gear type pump, 20 gpm capacity, 50 psig discharge, carbon steel			
Area 80 - Power & Control							
		1	Control Room				
		1	Power Module Building				
Area 90 - Site Water Balance							
	P-9001	1	Gray Water Pump				
	P-9002	1	Material Handling Building Sump Pump				
	P-9003	1	Material Handling Building Sump Pump				
	P-9004	1	Material Handling Building Sump Pump				
	P-9005	1	Railcar Loadout Building Sump Pump				
	P-9006	1	Railcar Loadout Building Sump Pump				
	P-9007	1	Dryer Enclosure Sump Pump				
	P-9008	1	MHB Collection Tank Transfer Pump				
	P-9009	1	Truck Turn-Around Area Sump Pump				
	P-9010	1	Truck Wash Sump Pump				
	T-9001	1	Gray Water Collection Tank				
	T-9002	1	MHB Collection Tank				

000246

1321

SECTION 09900

PAINTING, GENERAL

PART 1 GENERAL

1.1 SECTION INCLUDES

This specification provides guidance for selection, surface preparation, and application of paint for the piping, equipment, structural steel, etc., associated with the equipment being supplied.

The equipment will be operated in areas with ambient conditions that may be classified as "severe". Paint systems and application techniques shall be specified to meet these severe classification requirements.

All surface preparation and painting of steel surfaces shall conform to the procedure outlined in the Steel Structures Painting Council Application Specification SSPC-PA-1 and Surface Preparation Specification SSPC-SP-1 through 10, except as modified in this Specification.

Safety color coding shall be applied for identifying and marking physical hazards in accordance with the requirements of the Occupational Safety and Health Act, Subpart J, Section 1910.144.

1.2 RELATED SECTIONS

1.3 REFERENCES, CODES, AND STANDARDS

A. SSPC-PA-1 - Steel Structures Painting Council Application Specification

B. SSPC-SP-1 - Solvent Cleaning

C. SSPC-SP-3 - Power Tool Cleaning

D. SSPC-SP-7 - Brush-Off Blast Cleaning

E. SSPC-SP-10 - Near-White Blast Cleaning

F. OSHA Subpart J, Section 1910.144 - Identification and marking of physical hazards.

1.4 SUBMITTALS

A. Manufacturer's current printed product description, material safety data sheets (MSDS) and technical data sheets for each coating system. Detailed mixing,

thinning and application instructions, minimum and maximum application temperature, and curing and drying times between coats for epoxy, moisture-curing polyurethane, and liquid glaze coatings.

B. The names, quantity represented, and intended use for the proprietary brands of materials proposed to be substituted for the specified materials when the required quantity of a particular color is 50 gallons or less.

C. Certificate stating that paints contain no mercurial mildewcide or insecticide. Certificate stating that paints proposed for use contain not more than 0.06 percent lead. Certificate stating that paints proposed for use meet the VOC regulations of the local Air Pollution Control Districts having jurisdiction over the geographical area in which the project is located.

1.5 PACKAGING, LABELING, AND STORING

Paints shall be in sealed containers that legibly show the designated name, formula or specification number, batch number, color, quantity, date of manufacture, manufacturer's formulation number, manufacturer's directions including any warnings and special precautions, and name of manufacturer. Pigmented paints shall be furnished in containers not larger than 5 gallons. Paints and thinner shall be stored in accordance with the manufacturer's written directions and as a minimum stored off the ground, under cover, with sufficient ventilation to prevent the buildup of flammable vapors and at temperatures between 40 and 95 degrees F.

1.6 ENVIRONMENTAL CONDITIONS

Unless otherwise recommended by the paint manufacturer, the ambient temperature shall be between 45 and 95 degrees F when applying coatings other than water-thinned, epoxy, and moisture-curing polyurethane coatings. Water-thinned coatings shall be applied only when ambient temperature is between 50 and 90 degrees F. Epoxy, and moisture-curing polyurethane coatings shall be applied only within the minimum and maximum temperatures recommended by the coating manufacturer. Moisture-curing polyurethane shall not be applied when the relative humidity is below 30 percent.

PART 2 PRODUCTS

2.1 PAINT

The term "paint" as used herein includes emulsions, enamels, paints, stains, varnishes, sealers, cement-emulsion filler, and other coatings, whether used as prime, intermediate, or finish coat.

A. Paint shall conform to the respective specifications listed for use in the painting schedules at the end of this section, except when the required amount

of a material of a particular color is 50 gallons or less, an approved first-line proprietary paint material with similar intended usage and color to that specified may be used. Additional requirements are as follows:

B. Colors shall be as selected from Table 1 and table 2.

C. Paints containing lead in excess of 0.06 percent by weight of the total nonvolatile content (calculated as lead metal) shall not be used.

D. Paints containing zinc chromate or strontium chromate pigments shall not be used.

E. Paints shall comply with applicable state and local laws enacted to insure compliance with Federal Clean Air Standards. Materials shall conform to the restrictions of the local air pollution control authority. When the materials specified in the painting schedule do not meet the applicable VOC content limitations, the Contractor shall notify the Contracting Officer prior to commencing the work.

PART 3 EXECUTION

3.1 PROTECTION OF AREAS NOT TO BE PAINTED

Items not to be painted which are in contact with or adjacent to painted surfaces shall be removed or protected prior to surface preparation and painting operations. Items removed prior to painting shall be replaced when painting is completed. Following completion of painting, workmen skilled in the trades involved shall reinstall removed items. Surfaces contaminated by coating materials shall be restored to original condition.

3.2 SURFACE PREPARATION

A. Surfaces to be painted shall be clean and free of foreign matter before application of paint or surface treatments. Oil and grease shall be removed with clean cloths and cleaning solvents prior to mechanical cleaning. Cleaning solvents shall be of low toxicity with a flashpoint in excess of 100 degrees F. Cleaning shall be programmed so that dust and other contaminants will not fall on wet, newly painted surfaces. Exposed ferrous metals such as nail heads on or in contact with surfaces to be painted with water-thinned paints, shall be spot-primed with a suitable corrosion-inhibitive primer capable of preventing flash rusting and compatible with the coating specified for the adjacent areas.

Sandblasting or cleaning shall be so scheduled that all surfaces prepared in this manner during a given day can be coated with the appropriate primer or finish coat as required by the Paint Application Schedule (Table 1)

B. Ferrous surfaces including those that have been shop-coated, shall be solvent-cleaned. Surfaces that contain loose rust, loose mill scale, and other foreign substances shall be cleaned mechanically with power tools according to SSPC SP 3 or by sandblasting according to SSPC SP 7. Shop-coated ferrous surfaces shall be protected from corrosion by treating and touching up corroded areas immediately upon detection.

C. Galvanized, aluminum and aluminum-alloy, lead, copper, and other nonferrous metal surfaces shall be solvent-cleaned in accordance with SSPC SP 1.

D. Previously painted surfaces damaged during construction and specified to be repainted shall be thoroughly cleaned of all grease, dirt, dust or other foreign matter. Blistering, cracking, flaking and peeling or other deteriorated coatings shall be removed. Slick surfaces shall be roughened. Damaged areas shall be repaired with suitable material to match adjacent undamaged areas. Edges of chipped paint shall be feather edged and sanded smooth. Rusty metal surfaces shall be cleaned as per SSPC requirements. Solvent, mechanical, or chemical cleaning methods shall be used to provide surfaces suitable for painting. New, proposed coatings shall be compatible with existing coatings. If existing surfaces are glossy, the gloss shall be reduced.

3.3 HAND AND SOLVENT CLEANING

A. Loose millscale, loose rust, weld flux and splatter, loose paint spalled and loose masonry, etc., shall be removed by brushing, scrapping, chipping, or a combination of these methods.

B. Stratified rust or scale shall be removed by chipping or hammering. Oil and grease shall be removed by solvent, which shall be applied by brushes or rags. After solvent cleaning surfaces shall be wiped with clean rags or brushes and followed by a fresh water rinse.

3.4 POWER TOOL CLEANING

A. Power wire brushes, power impact tools, power grinders and sanders, and rotary scalers can be used to remove loose millscale, rust, paint, and weld flux and splatter.

B. Oil, grease, and dirt shall first be removed by solvent cleaning.

C. All power equipment shall be used in such a manner that no burrs or sharp edges and cuts are left on the surface. Smudges left by power brushes or other surface contamination shall be removed by solvent and then rinsed.

3.5 SANDBLASTING

A. Before sandblasting, oil or grease shall be removed by solvent cleaning and excessive rust shall preferably be removed by chipping tools or scrapping.

B. Gray metal sandblasting shall be done whenever possible for all general purpose cleaning preparatory to painting new steel structures and equipment.

C. Commercial or gray metal sandblasting shall result in a surface having a gray color and which may be somewhat streaked or mottled in appearance. The sandblasted surface shall be free of rust, millscale, oil, paint, or other surface contaminants.

D. Brush-off sandblasting shall be done whenever possible, preparatory to repainting or spot patching steel structures or equipment. Brush-off sandblasting shall result in a surface free from loose millscale, loose paint, and rust. Tight millscale or tightly adhering paint need not be removed.

E. Sandblasting shall be done with clean, dry silica sand of a maximum particle size no larger than that passing through 16-mesh screen. Adequate separators and moisture traps shall be provided to insure the blast air which is free of detrimental amounts of condensed water or oil. Dust or residue from blasting shall be removed by blowing, brushing, or vacuuming.

F. Under no circumstances shall a sandblasted surface be allowed to remain exposed overnight without primer application.

3.6 MIXING AND THINNING

A. When thinning is approved as necessary to suit surface, temperature, weather conditions, or application methods, paints may be thinned in accordance with the manufacturer's directions. When thinning is allowed, paints shall be thinned immediately prior to application with not more than 1 pint of suitable thinner per gallon. The use of thinner shall not relieve the Contractor from obtaining complete hiding, full film thickness, or required gloss. Thinning shall not cause the paint to exceed local limits on volatile organic compounds. Paints of different manufacturers shall not be mixed.

B. Two-component systems shall be mixed in accordance with manufacturer's instructions. Any thinning of the first coat to ensure proper penetration and sealing shall be as recommended by the manufacturer for each type of substrate.

3.7 APPLICATION

A. Painting practices shall comply with applicable state and local laws enacted to insure compliance with Federal Clean Air Standards. At the time of application, paint shall show no signs of deterioration. Uniform suspension of pigments shall be maintained during application.

B. Each coat of paint shall be applied so dry film shall be of uniform thickness and free from runs, drops, ridges, waves, pinholes or other voids, laps, brush marks, and variations in color, texture, and finish. Hiding shall be complete. Rollers for applying paints and enamels shall be of a type designed for the coating to be applied and the surface to be coated. Special attention shall be given to insure that all edges, corners, crevices, welds, and rivets receive a film thickness equal to that of adjacent painted surfaces.

C. Paint shall be applied in a uniform layer with overlapping at the edge of the spray pattern.

D. The painter shall take the necessary precautions to prevent fly spray from settling on other equipment, walks, piping, etc. Drop cloths or other protective covering or shields shall be used as necessary.

E. When painting non-sandblasted surfaces, or when repainting, each prime coat and each succeeding coat of paint shall be at least 1 mil thick when dry. Total minimum dry film thickness (MDFT) shall be 5 mils.

F. When required, dry film thickness shall be measured by use of an Elcometer film thickness gauge as manufactured by Gardner Laboratory, Inc.

G. Wet film thickness shall be measured by use of Nordsen wet film thickness gauge as manufactured by Nordsen Corporation.

H. Paint shall be allowed to dry for a time specified by the paint manufacturer before additional coats are applied.

I. Paints shall not be applied on surfaces when the surrounding atmospheric temperature is below 40°F or above 100°F, is wet or damp from water or condensation, the relative humidity is above 85 percent, or when the wind velocity is such that dust and dirt may be deposited in the wet paint film or when the wind will interfere with painting.

J. Various surfaces shall be primed and painted in accordance with the Paint Application Schedule (Table 1). Paint vendors shall be selected in accordance with the Paint Materials Table (Table 2).

3.8 VENTILATION

Adequate ventilation shall be provided during paint application. Respirators shall be worn by all persons engaged in spray painting. Adjacent inhibited areas shall be protected by approved precautionary measures.

3.9 TIMING

Surfaces that have been cleaned, pretreated, and otherwise prepared for painting shall be given a coat of the specified first coat as soon as practical after such pretreatment has been completed, but prior to any deterioration of the prepared surface. Sufficient time shall elapse between successive coats to permit proper drying. This period shall be modified as necessary to suit weather conditions. Oil-based or oleoresinous solvent-type paints shall be considered dry for recoating when the paint feels firm, does not deform or feel sticky under moderate pressure of the thumb, and the application of another coat of paint does not cause the undercoat to lift or lose adhesion. Manufacturer's instructions for application, curing and drying time between coats of two-component systems shall be followed.

Table 1 - Paint Application Schedule

Item	Surface Prep	Primer	MDFT	Finish	MDFT
1.0 Safety Colors					
a. Fire Equipment	Hand clean	101	2.5	201	5
b. Caution	Hand clean	101	2.5	202	5
c. Safety/First Aid	Hand clean	101	2.5	203	5
d. Automatic Start	Hand clean	101	2.5	204	5
2.0 Pressure Vessels, Heat Exchanger, Pipe and Hand Valves					
a. Non-insulated	Sandblast	101	2.5	205	5
b. Insulated	Sandblast	101	2.5	--	--
3.0 Ducting					
a. Non-insulated	Sandblast	101	2.5	205	5
b. Insulated	Sandblast	101	2.5	--	--
c. Over 180°F	Sandblast	101	--	205	2
4.0 Storage Tanks					
a. Non-insulated	Sandblast	101	2.5	205	5
b. Insulated	Sandblast	101	2.5	--	--

Item	Surface Prep	Primer	MDFT	Finish	MDFT
5.0 Fired Heaters, Boilers, Stacks, Mufflers, SCCs					
a. Under 180°F	Sandblast	101	2.5	205	5
b. Over 180°F	Sandblast	--	--	206	2
6.0 Structural Members and Assemblies					
a. Pipe Supports	Sandblast	101	2.5	205	5
b. Ladders and Cages	Hot Dipped	Galvanized			
c. Stair Treads, Grating	Hot Dipped	Galvanized			
d. Supports, Skids	Sandblast	101	2.5	205	5
e. Electrical Starter Racks	Sandblast	101	2.5	205	5
f. Local Control Panels	Manufacturers Standard/No Finish Paint Required				
7.0 Instrumentation					
a. Control Valves	Manufacturers Standard/No Finish Paint Required				
b. Process Controls	Manufacturers Standard/No Finish Paint Required				
c. Tubing	Manufacturers Standard/No Finish Paint Required				
8.0 Equipment					
a. Pumps	Manufacturers Standard			205	5
b. Motors	Manufacturers Standard			205	5
c. Fans/Blowers	Manufacturers Standard			205	5
d. Conveyors	Sandblast	101	2.5	205	5
e. Compressors	Sandblast	101	2.5	205	5
f. Kilns	Sandblast	--	--	206	2
g. FRP	Gel coat shall contain UV inhibitor and pigmented light gray to match Ameron GR-3 Pearl Gray				
h. Transformers	Manufacturers Standard/No Finish Paint Required				
I. Buildings	Manufacturers Standard/final coat should be light gray to match Ameron GR-3, Pearl Gray				
j. Generators	Sandblast	101	2.5	205	5

Table 2 - Paint Materials

Number	Color	Manufacturer's Brand
101	Gray-Green	Ameron, Dimetcote EZ-II Pittsburgh, EP-91-168/169, Inorganic Zinc Primer Sherman Williams, Zinc Clad I, Inorganic Zinc Primer Devoe, Catha-Coat 302, Inorganic Zinc Primer
201	Red	Ameron, Amercoat 383HS, Safety Red Polyamide-epoxy Pittsburgh, 97-10, Safety Red Polyamide-epoxy Sherman Williams, B62 A 213, High Solids Epoxy Devoe, Devran 224, High Build Epoxy
202	Yellow	Ameron, Amercoat 383HS, Safety Yellow Polyamide-epoxy Pittsburgh, 97-13, Safety Yellow Polyamide-epoxy Sherman Williams, B62 A 213, High Solids Epoxy Devoe, Devran 224, High Build Epoxy
203	Green	Ameron, Amercoat 383HS, Safety Green Polyamide-epoxy Pittsburgh 97-8, Safety Green Polyamide-epoxy Sherman Williams, B62 A 213, High Solids Epoxy Devoe, Devran 224, High Build Epoxy
204	Blue	Ameron, Amercoat 383HS, Safety Blue Polyamide-epoxy Pittsburgh, 97-11, Safety Blue Polyamide-epoxy Sherman Williams, B62 A 213, High Solids Epoxy Devoe, Devran 224, High Build Epoxy
205	Light Gray*	Ameron, Amerlock 383HS, High Solids Epoxy Pittsburgh, EP-161/169, High Solids Epoxy Sherman Williams, B62 A 213, High Solids Epoxy Devoe, Devran 224, High Build Epoxy
206	Aluminum	Ameron, Amercoat 878, High Heat Silicone Pittsburgh, Speedhide 6-220, High Heat Silicone Sherman Williams, Silver Brite, High Heat Silicone Devoe, HT-10, Silicone High Heat Coating

*Color shade to match Ameron GR-3, Pearl Gray.

-- End of Section --

SECTION 11110

DRYER FEED SYSTEM

PART 1 GENERAL

1.1 SECTION INCLUDES

The following equipment shall be included as part of the scope of supply:

A. Belt Feed Conveyor (H-1002)

B. Belt Scale (Z-1001)

C. Dryer Feed Screw (H-1003)

D. Equipment supports, platforms, ladders, handrails, and guards as specified in Section

E. Hydraulic system, drives, and motors. All other equipment including, but not limited to, shaft seals and gasketing, piping, local instrumentation, and controls within the equipment boundaries.

1.2 RELATED SECTIONS

The following IT specifications are attached as appendices and are considered a part of this specification:

A. Section 09900 - Painting General
B. Section 13310 - Noise Level Specification
C. Section 13200 - General Tanks and Vessels
D. Section 15050 - Piping and Accessories
E. Section 15080 - Piping Specialties
F. Section 15170 - Motors
G. Section 15250 - Insulation
H. Section 16900 - Instrumentation and Control.

1.3 REFERENCES, CODES, AND STANDARDS

The following industry, association, and government codes and standards shall be followed as applicable to the design, fabrication, assembly, and testing of all equipment furnished under this specification:

A. American National Standards Institute (ANSI)
B. American Society of Mechanical Engineers (ASME)
C. American Society of Testing Materials (ASTM)
D. American Welding Society (AWS)
E. Conveyor Equipment Manufacturers Association (CEMA)
F. Ohio Department of Transportation (ODOT)

G. Instrument Society of America (ISA)
H. National Electric Code (NEC)
I. National Electric Manufacturers' Association (NEMA)
J. National Fire Protection Association (NFPA)
K. Resource Conservation and Recovery Act (RCRA) of 1976 and all amendments and regulations
L. Occupational Safety and Health Administration (OSHA) of 1970 and all amendments and regulations.

1.4 SYSTEM DESCRIPTION

This specification discusses the minimum design criteria, equipment specifications, instrument specifications, and process control requirements necessary to obtain firm quotes for the proposed solid feed system equipment, as well as to identify any limitations imposed by the equipment.

A. The solid feed system will be an operating unit of an indirect fired rotary dryer for radioactive waste. The system will be installed at the U.S. Department of Energy's (DOE) Fernald Environmental Management Project (FEMP). The FEMP is a DOE-owned contractor-operated facility, located about 18 miles northwest of Cincinnati Ohio. Complete containment, spill prevention, equipment decontamination, and maintenance convenience are very important criteria to incorporate in the design of the system. Typical FEMP wastes include: contaminated soils, filter cake, salts, sludges, lime, and general debris in the form of shredded metal, wood, rock, etc.

Waste solids will be pretreated (e.g., classified, shredded, blended, and stockpiled by IT Corporation [IT]) in the feed preparation area to the extent required by the solid feed equipment. Pretreatment costs would be minimized by selecting a solid feed system capable of handling a wide range of solid waste characteristics such as stickiness, moisture, abrasiveness, and varying particle size (maximum 4 inches). The solid feed will be fed by a front end loader into an existing feed hopper and mass flow twin screw feeder (H-1001). The feed screw will be driven for variable flow control and fixed maximum torque. The screw feeder will discharge onto a feed belt conveyor . The conveyor be electrically driven and will run at a constant speed and will be equipped with a single idler weigh belt scale. The weight of the feed material and the speed of the conveyor will be measured and the feed rate will be calculated. The feed rate will be compared with a set point feed rate and a feed back loop will adjust the screw feed rate until the feed rate matches the set point. The weigh belt will discharge into a single screw feeder (H-1003). The screw feeder will be driven for variable speed control and fixed maximum torque. Depending on the moisture content, the cohesive and adhesive strength of the material can cause the material to bridge in the hopper. Therefore, the screw speed will be manually adjusted to maintain a feed rate that will meet or exceed the feed rate of the material being delivered to it to prevent an accumulation of material in

the screw feed hopper. The screw feeder will be designed such that it can be retracted for maintenance and during the dryer heat up

B. Data and information are submitted for quotation to establish minimum acceptable design requirements and to provide reference data for engineering of the system. Their inclusion, however, does not imply, nor shall it be construed that IT has designed the equipment or components covered by this inquiry. It shall be the responsibility of the Seller to ensure that the equipment has been designed, fabricated, and tested in accordance with all IT specifications, engineering codes, standards, and government regulations applicable to the specified service.

C. The Seller shall furnish all labor, materials, drawings, tools, transportation, and equipment necessary to design, engineer, fabricate, furnish, and deliver free on board (FOB) FEMP (job site). The Seller shall supply the necessary startup and erection assistance to adjust, test, and demonstrate the performance of the feed system described herein. The system's completeness and working ability shall be demonstrated with a field performance test before final acceptance by IT.

D. The following items shall not be included as part of the scope of supply except as noted:

1. Licenses and permits except U.S. Department of Transportation (DOT) permits for transportation of supplied equipment.
2. Operating personnel, other than supervisory for startup and testing.
3. Motor starters, controls, power supply, and external wiring from motor control center and control panels to feed system.
4. Material unloading and storage at the jobsite.
5. Concrete pad, foundations, and anchor bolts.
6. Field assembly and erection. Except Seller must provide complete erection and installation instructions, and Seller must quote per diem rate for field service personnel.

1.5 SUBMITTALS

A. Seller shall provide the following data in its entirety:

1. Make, model, and weight of each piece of equipment
2. Major component cost information
3. List of ship-loose items and erection description
4. Descriptive literature for all equipment furnished
5. Detailed scope of work with list of exceptions to inquiry defined scope (with bid documents)
6. Equipment outline dimensions (with bid documents)
7. Completed technical data sheets (with bid documents)
8. General arrangement drawings

9. Motor list with manufacturer/hp/rpm/frame/type (with bid documents)
10. All utility requirements summarized in tabular form
11. Equipment load and anchor bolt location drawing for foundation design (after purchase order award)
12. Structural calculations for support structures (after P.O. award)
13. Detailed control schematics, wiring diagrams, and description of equipment furnished by the supplier (after P.O. award)
14. Assembly drawings on the equipment; drawings shall show space required for service and maintenance (after P.O. award)
15. Detailed arrangement and cross-section drawings including physical dimensions, support structure, motor mounting arrangements, components interfaces, walkways, ladders, accessway, and foundation requirements including point loadings and anchor bolt details, etc., shall be submitted for review and approval (after P.O. award)
16. Operation and maintenance manuals (after P.O. award)
17. Installation instructions (after P.O. award)
18. Storage instructions and on-site handling procedures with the assumption that system will be erected upon receipt (after P.O. award)
19. Recommended spare parts lists with pricing for 1-year and 5-year operations
20. Nondestructive testing documentation (after P.O. award)
21. Completed instrument data sheets including instrument ranges, serial numbers, etc. (after P.O. award).

B. Drawings and data submitted for approval shall be in the form of one reproducible (sepia or other transparency) and two blue lines for sizes larger than 11 inches by 17 inches. Smaller sizes may be actual catalog cuts or good photography. Final CERTIFIED drawings must be submitted as mylars.

All operation and maintenance manuals, installation instructions, and storage instructions shall be submitted in ten copies.

C. After purchase order award, the Seller shall supply a list of recommended spare parts. The list shall include the following information:

1. Quantity - The number of spare parts or components the System Fabricator recommends to ensure continued operation for 1 year and 5 years
2. Item - Description of spare part component
3. Where used - Name of equipment item spare part component is used on
4. Manufacturer's Part No. - Item manufacturer's part number or model number. This must be original manufacturer's part number and not a number assigned by Fabricator
5. Manufacturer - Name of company that manufactured the component part.
6. Tag No. - Purchaser's piping and instrumentation diagram (P&ID) Tag No. that identified equipment item spare part is used on

7. Fabricator's No. - System Fabricator's equipment identification number used to identify equipment item on their drawings
8. Price - Price at which Purchaser will purchase component part from System Fabricator
9. Delivery - Time required to transport component part from System Fabricator to Purchaser.

D. The Seller shall include in the proposal a list of special tools and fixtures for field assembly of system, if required, with itemized prices.

1.6 QUALITY ASSURANCE

A. All materials shall be new and high quality. Items that are not covered by the above specifications and codes shall be furnished in accordance with the individual manufacturer's standards and/or standards that are generally in use in the United States. These items shall be indicated as such in the vendor's proposal.

B. All equipment, interface connections, and all electrical wiring and connections shall conform to U.S. standards and dimensions.

1.7 SERVICE AND WARRANTY

A. The Seller shall provide the services of erection and startup advisers at the construction site to advise IT field personnel and to ensure that all of the equipment that the Seller supplies is properly installed and commissioned. The scope of these services shall include, but not be limited to, the following:
- Inspection and dimensional check of foundations
- Installation and alignment of conveyor belts, drives, and motors
- Preoperational testing of conveyor drives and control systems
- Controls and instrumentation functions.

B. All equipment provided shall be warranted by the manufacturer including parts and labor.

PART 2 PRODUCTS

2.1 MATERIAL

A. All materials furnished or incorporated in the fabrication shall be new. Materials shall comply with the following requirements and specifications. Materials required, but not specified below, shall be those best suited for the intended use considering service, function, strength, and durability. Materials containing asbestos shall not be used without prior review by IT.

B. If, in the opinion of the Seller, some other material or materials are better suited for the intended service conditions, supplier shall submit full information and obtain the IT Engineer's written concurrence for the proposed alternative material. Seller shall certify that materials used are compatible with intended service and environmental conditions.

C. The materials used in the equipment construction shall conform to the following ASTM standards:

ASTM A48	Iron castings
ASTM - A447-50 Type 11 or A-297-HK	Stainless steel castings
ASTM A167	316-L stainless steel plate
ASTM A325	High strength bolts
ASTM A307	Assembly
ASTM A536	Ductile iron castings
ASTM A36	Structural steel

2.2 DESIGN BASIS AND PERFORMANCE CRITERIA

A. The design conditions are specified to serve as a guide for the supplier and are not intended to give complete details. The Seller shall be responsible for correction of errors caused by deviation from design conditions or details shown in IT's drawings and specifications, unless these deviations are called to the attention of IT in writing and IT makes written acceptance of such deviation.

B. Utilizing feed preparation equipment (not within this scope of supply), a stock-pile of pre sized solid feed (4-inch and less) will be available to ensure uninterrupted feed supply to the solid feed system. The solid feed system shall be capable of handling the feed characterized.

C. The system will be designed for outdoor service and a continuous duty of 24 hours a day, 350 days per year.

D. Materials of construction shall be selected by Seller.

E. The feed system shall be designed for ease of maintenance. Provisions shall be made for access to all moving parts for inspection, maintenance, and material clean out. Additional entry points and low point drains/plugs shall be included for decontaminating equipment with water and/or solvents.

F. The following shall be considered as typical feed material characteristics:

Description	Particle Size (inch)	Moisture (weight %) (wet basis)	Design Processing Rate
Blended soil, lime, filter cake, wood chips, debris, hydrated salts	<4	15-80% 40% avg.	50 tons per hour

1. The density may range from 70 to 150 pounds/cubic foot with overall average moisture range of 40 percent (wet basis); chloride range of 0 to 3 percent (by weight); material angle of repose 45 to 55 degrees.
2. The bulk of material to be processed has an average density of 90 pounds/cubic foot and moisture level of 40 percent by weight (wet basis).
3. Our tests indicate that the material has high cohesive and adhesive strength at the design moisture. Therefore, unassisted gravity flow in a converging hopper is not possible. The wall angles of storage or feed hoppers should be vertical or negatively sloped.

G. Site conditions and utilities are as follows:

1. Electrical Power Supply
   - Main bus: 480 volts AC, 60 Hertz (Hz), 3 phase
   - Normal lighting: 120 volts AC, 60 Hz, 1 phase
   - Normal control: 120 volts AC, 60 Hz, 1 phase
   - Emergency lighting and control: 120 volts AC, 60 Hz, 1 phase
   - Instrumentation: 4 to 20 milliamp (ma) input and output for analog signals; 120 volts AC for discrete contacts.
2. Compressed Air Supply
   - Plant air: 50 to 100 psig
   - Instrument air: 50 to 100 psig at -40°F dew point.
3. Process Water Supply
   - Process water: 25 to 50 psig at 40 to 110°F.
4. Environmental Conditions
   The equipment shall be designed and fabricated to be operated or otherwise withstand the environmental conditions set forth below:
   - Ambient temperature -10 to +110°F
   - Wind force: 80 miles per hour (mph) maximum
   - Seismic: Zone I
   - Altitude: 580 feet above sea level.

2.3 SPECIFIC DESIGN REQUIREMENTS

A. Belt Feed Conveyor (H-1002)

The conveyor will receive feed material from the discharge of the mass flow screw feeder (H-1001) provided by IT as existing equipment. The interface with the existing mass flow feeder will be the sellers responsibility.

1. Duty - The conveyor shall be a heavy-duty, 30-inch wide belt conveyor troughed at 35 degrees rated for 50 tph capacity.

2. Description - Frame shall be a truss type. The conveyor shall include head, carrying, and tail sections complete with 35-degree carrying idlers, training idlers, and return idlers. Conveyor shall include a head section with 12-inch gravity take-up. Support bents shall be provided as necessary to support the conveyor.
3. Belt Pulleys - The head pulley shall be a herringbone lagged. The tail pulley shall be self-cleaning. The take-up pulleys shall be drum-type. All belt pulleys shall be mounted with compression hubs and externally lubricated bearings.
4. Troughing Idlers - All troughing idlers shall be 35-degree 5-inch-diameter CEMA Class C spaced on 48-inch centers with greased bearings.
5. Return Idlers - All return idlers shall be 5-inch CEMA Class C spaced on 120-inch centers with greased/sealed for life bearings.
6. Conveyor Belt - The belt shall be mildew and fungus resistant vitrile belt, 30-inches wide, 3-ply (3/16-inch cover by 1/16-inch back), 285 PIW minimum rating with a heavy duty mechanical splice.
7. Skirtboards - Skirtboards with rubber lip shall be provided at the loading point extending approximately 10 feet.
8. Belt Cleaner - A quality spring-loaded-type belt scraper system shall be provided at the discharge end of the conveyor.
9. Shafts - Seller shall recommend size of all shafts. Sizing shall be based on heavy starting and bending loads created by the motor/reducer. Shaft deflection to be less than 0.0075 in/ft of width between conveyor bearing centers. Material shall be at least AISI C1018 carbon steel.
10. Drive - The drive motor shall be 1,750 revolutions per minute (rpm), 460V, 3 phase totally enclosed fan cooled (TEFC) motor with Class III drive. Drive to include shaft-mounted gear reducer, V-belt, sheaves, and belt guard in compliance with OSHA standards.
11. Walkway - A 30-inch-wide access walkway shall be provided along the full length of the conveyor. Discharge end of the walkway will be accessed from the platform. An OSHA approved type ladder shall be provided at the lower end of walkway. Walkway shall include steel grating floor with a 4-inch-high toeboard and a 42-inch-high railing.
12. Supports - Conveyor supports shall be provided as follows:
    a. Support at tail end.
    b. Conveyor supports at intermediate section to be determined by the Seller. Concrete foundations supplied by others.
    c. Bent material and size to be determined by Seller.
    d. Support conveyor head end off of support structure. Material and size to be determined by Seller.
13. Instrumentation - Instrumentation controls required include misalignment (skew) switches at the head and tail pulleys; separate emergency pull cords and switches along length of conveyor inside building and outside of building; Ronan motion detector mounted on the tail pulley; and installation of belt scale onto conveyor stringers. The Seller should recommend any alarm and shutdown interlocks needed.

B. Conveyor Belt Scale (Z-1001)

1. Duty - The unit shall be a single-idler belt scale designed for in-line weighing of material on belt. The unit shall be equal to a Milltronics single idler belt scale.
2. Location - The belt scale shall be installed to the conveyor in the Seller's shop. The integrator/transmitter shall be locally mounted by the Seller. The scale shall be located in the conveyor section and accessible from the walkway.
3. Capacity - The scale must be capable of rates up to 50 tph. For the initial application, the range shall be set and calibrated for 0 to 30 tph.
4. Accuracy - The totalized weight measured shall have an accuracy of ±0.5 percent over a range of 0.25 to 1.25 of design capacity.
5. Speed Sensor - The belt speed sensor shall be a digital, photo electric pulse generator-type directly coupled to the tail pulley shaft of the conveyor.
6. Classification - The scale components mounted within the conveyor shall be weather tight. The integrator/transmitter unit mounted outside the conveyor shall be in a NEMA 4 or better enclosure.
7. Integrator - The integrator/transmitter unit shall have an LCD display to give local readout of rate, total, speed, and load. A built-in keypad shall be provided for programming and calibration. Calibration shall be fully automatic and achieved through keypad entry.

   The unit shall have access protection that requires a security code to access the calibration parameters and programming data. All information must be safeguarded in nonvolatile memory in event of power loss.
8. Output Signals - Outputs for remote rate and totalization shall be provided.

C. Dryer Screw Feeder (H-1003)

1. Duty - The dryer feed screw shall be designed to provide a positive uniform flow of solid feed to the dryer and ability to seal against a negative pressure differential in the dryer of 1 inch water gauge. The feed screw will receive feed material in the feed screw hopper from the belt feed conveyor (H-1002). The feed screw system shall provide clear out doors, anti-jam mechanism, reversing capabilities, mechanical access by extracting screw from dryer and the ability to open bottom door, reverse screws, and discharge solids to the ground. The screw speed will be adjusted to deliver feed as it is received from the belt feed conveyor without allowing accumulation of feed material in the feed hopper.
2. Description - The screw shall be 30 inch diameter consisting of a constant pitch section conveying section. Seller to recommend need for variable pitch section. Conveyor flighting shall be solid and continuous along the shaft length and hard surfaced to resist abrasion. The design feed rate shall be 0 to 50 tons/hour, with normal operation of 30 tons/hour. The screw shall be cantilevered into the dryer. Screw feeder shall be inserted into dryer approximately 6 feet, 6 inches from the feed hood. Seller shall

recommend length based on cantilever. Minimum length shall be 15 feet. Bottom discharge or front discharge is acceptable.

3. Material of Construction - Seller to recommend. Must be able to withstand temperature of 600°F and high chloride concentration. The temperature at the feed end will be ambient and 600°F at the discharge end.
4. Feed Screw Hopper - The hopper shall be constructed of 3/8 inch minimum thickness that is suitably reinforced with gussets, angle , flat bar, etc. The side walls shall be vertically slopped.
5. Housing - The housing thickness shall be a minimum of 3/16 inch. The seller to recommend material selection and trough design. The housing shall be a CEMA class IVE enclosure to minimize air infiltration into rotary dryer and release of emissions. The housing shall provide removable covers for access to screws. The housing should have a flanged discharge opening (for emergency discharge) at the bottom of the feed end of the screw.
6. Support - The Frame and supports are part of Seller supply. The dryer screw feeder assembly shall be mounted on rollers to allow a minimum of 8 feet of retraction from the dryer. Hydraulic drive system for screw retraction and insertion shall be provided.
7. Access - A platform shall be provided to retract screw feeder and perform maintenance. The platform must be designed to allow discharge to ground from the front or back of the screw construction.
8. Bearings - The vendor shall recommend size, type, and materials of construction. The seller to recommend cantilevered screw or end bearing.
9. Drive - The screw shall be driven to provide variable speed control and fixed maximum torque.

D. Support Structure

1. The structure shall be designed to support the discharge end of the transfer belt conveyor (H-1002), as well as the associated maintenance access platforms and ladders.
2. Lower Deck - A deck shall be provided at approximately the 10-foot level for access to the dryer feed screw with drive and the take up for the belt feed conveyor. A ladder shall be furnished from this deck to the ground.
3. Upper Deck - A deck shall be provided at approximately the 20-foot level for servicing the upper end of the belt feed conveyor and its drive. The deck shall be accessible from the ground level by a caged ladder. The platform shall provide access to the walkway on the transfer belt conveyor.
4. Deck Construction - Deck flooring shall be 1-inch by 3/16-inch galvanized serrated bar grating. The serrated bars shall run perpendicular to the walkway to provide slip resistance.
5. Handrails - Handrails 42-inches high with center bar and kick plate designed in conformance with OSHA standards shall be provided around each platform.
6. Ladders - All ladders shall be designed and installed to comply with OSHA standards. The ladders and cage shall be galvanized after fabrication and

designed to bolt to the supporting structure, where required. A safety bar or chain shall be provided at the ladder entrance from each deck.

E. Machinery Guards
1. Removable guards shall be provided for all rotating shafts, pinch points, etc., per OSHA requirements.
2. Removable machinery guards that are large or difficult to handle, regardless of total weight, must be equipped with handles.

F. Inspection
1. Supplemental to the inspection by the Seller and prior to shipment, an IT representative will inspect the unit. Seller to notify IT in writing when unit or key components of unit are available and ready for inspection.
2. Inspection and approval by IT agent shall not relieve the supplier from compliance with these specifications.

G. Lubrication
1. Seller shall be responsible for providing a recommended lubrication list for each piece of equipment. The lubrication systems shall be complete and operable systems with all controls and appurtenances furnished.
2. Lubrication systems for rollers and gear boxes must be designed for conditions anywhere in the United States. Extended lubrication piping shall be Vendor-designed, -purchased, and -installed where required. An inspector from the Vendor must approve the system before IT attempts to operate the equipment. Seller shall supply IT with all drawings and information required to describe the recommended lubrication systems.

H. Lifting Lugs - Lifting lugs shall be provided where appropriate for lifting, loading, off loading, and assembly of the equipment at the job site.

2.4 FABRICATION

A. Bolt holes in structures shall be drilled or punched. Burning of holes will not be permitted.

B. Flange bolt holes shall straddle normal centerline of unit.

C. Nozzles and flanged joints 6 inches or smaller shall be fabricated with flat-face flanges having a machined face. Facing shall be suitable for type of gasket used. Seller shall state types and materials of gaskets used subject to IT review and approval.

D. Seller shall lubricate external bolting with a metallic-base waterproof lubricant to prevent galling in use and aqueous corrosion during testing, shipping, and storage. Lubricant shall be applied to the full length of the thread.

E. Seller shall furnish covers, bolts, and gaskets for covered openings and shall furnish screwed plugs of similar material for couplings.

F. Welding

1. Seller shall be responsible for, but shall not be limited to, the following concerning welded components:
   - Weld appearance
   - Dimensional accuracy
   - Removal of all weld splatter
   - Prevention of flaws such as cracks, porosity, unfilled craters.
2. Seller shall be responsible for, but shall not be limited to, the following concerning inspection of the work during welding:
   - Welding process
   - Cleaning
   - Joint preparation
   - Filler metal
   - Qualified welding procedure
   - All welding by AWS or ASME code certified welders
   - Nondestructive testing.
3. All welding shall meet the visual inspection requirements of the appropriate sections in the latest edition of the structural welding code of the AWS.

2.5 ELECTRICAL AND CONTROLS

A. Motors and Electrical Equipment

1. All motors shall be 3-phase 460-volt (VAC) totally enclosed fan cooled (TEFC). Control voltage is to be either 24V direct current (DC) or 120V alternating current (AC). All motors shall be provided based on a 1.15 service factor. All motors and electrical equipment furnished under this specification shall be in accordance with Specification for Motors, Section 15170.
2. Electrical area is "unclassified."

B. Instrumentation and Controls

1. The Seller shall provide the basic design for instrumentation and control systems where required by this specification, and shall also provide general criteria establishing quality and characteristics of hardware. All Seller-provided instrumentation shall be in accordance with Instrument and Control Specification, Section 16900.
2. Instrumentation shall be electronic utilizing 4 to 20 ma, 24 VDC for analog signals and 120 VAC for discrete signals. Radio frequency (RF) transmitters are acceptable with prior approval from IT.

2.6 LABELING

A. Each item shall have a manufacturer's standard nameplate permanently attached at a location which is easily readable. The nameplate shall contain the following information as applicable.
   1. Its description
   2. Its number/tag number
   3. Manufacturer's name
   4. Capacity
   5. Utilities
   6. Date of manufacture
   7. Purchase order.

PART 3

3.1 ASSEMBLY AND TESTING

A. All equipment shall be shipped and assembled to the maximum practical extent consistent with shipping limitations.

B. Shop tests, where applicable, will be witnessed by IT. IT requires at least 5 days notice and a conformation 48 hours before starting each test.

3.2 SURFACE PREPARATION AND COATING

A. All motors, drive units, and subsupplier-furnished standard items may be shop-primed and factory-finished with the subsupplier's standard coating. All such items shall be identified in the supplier's cleaning and coating procedures.

B. All items shall be cleaned and coated by the supplier except for machine-finished surfaces and corrosion-resistant surfaces. Machined surfaces of ferrous metals, including threaded holes, that will be exposed shall be cleaned and coated with an acceptable rust-preventive compound.

C. Where interior coatings are not required, the interior surface shall be thoroughly cleaned to remove all mill scale, spatter, and other debris and deposits that may come loose in service.

D. All ferrous surfaces and structural steel shall be primed. All fabricated carbon steel shall be sandblasted and primed.

E. Refer to Paint Specification, Section-09900 for complete surface preparation, priming, and finish coat application details.

3.3 FIELD PERFORMANCE TEST

A. The Seller shall have full responsibility for compliance with the requirements of the specifications contained herein. Review and/or approval of drawings, data, or specifications by IT with regard to general design and controlling dimensions does not constitute acceptance of any designs, materials, or equipment that will not fulfill the functional or performance requirements established herein.

B. After the feed system equipment has been installed, and after the Seller has inspected the installation and certified that it is in accordance with the Seller's recommendations, the performance test will be conducted by IT at a time to be mutually agreed upon. Feed material will be made available by IT for the tests. The tests will be performed by IT in the presence of the supplier.

C. Faulty performance or any other defects, if determined by IT to be due to supplier furnished items or service, shall be corrected to IT's satisfaction at Seller's expense within a negotiated time.

D. The field performance shall include the following:
   1. Convey 30 tph at 90 pounds/cubic foot sticky, 40 percent moisture, 4-inch maximum particle size.
   2. Demonstrate 100 percent on-line capability for a 24-hour duration test at design conditions.

-End of Section-

SECTION 11112

DRYER PRODUCT HANDLING SYSTEM

PART 1 GENERAL

1.1 SECTION INCLUDES

This specification discusses the minimum design criteria, equipment specifications, instrument specifications, and process control requirements necessary to obtain firm quotes for the dried product handling system, as well as to identify any limitations imposed by the equipment.

1.2 RELATED SECTIONS

Section 09900 - Painting General

Section 13310 - Noise Level Specification

Section 15050 - Piping and Accessories

Section 15080 - Piping Specialties

Section 15170 - Motors

Section 16900 - Instrumentation and Control

Division 16 - Electrical.

1.3 REFERENCES, CODES, AND STANDARDS

The Seller shall comply with the following codes and standards as applicable to the design, fabrication, assembly, and testing of all goods, materials, and equipment furnished under this specification. The Seller shall also comply with the requirements of all applicable codes, standards, statutes, and regulations. In the event of conflict between regulations, the more stringent shall apply.

A. American National Standards Institute (ANSI)
B. American Society of Mechanical Engineers (ASME)
C. American Society of Testing Materials (ASTM)
D. American Welding Society (AWS)
E. Conveyor Equipment Manufacturers Association (CEMA)
F. Instrument Society of America (ISA)
G. National Electric Code (NEC)
H. National Electric Manufacturers' Association (NEMA)
I. National Fire Protection Association (NFPA)

J. Occupational Safety and Health Administration (OSHA) of 1970 and all amendments.

All materials shall be new and high quality. Items that are not covered by the above specifications and codes shall be furnished in accordance with the individual manufacturer's standards. These items shall be indicated as such in the seller's proposal.

1.4 SYSTEM DESCRIPTION

A. The scope of supply included in this specification is all necessary equipment from the rotary drier discharge chute to the product stock pile, including the drag flight conveyor.

B. The instrumentation and control provided by the Seller should be adequate for good safe industrial operation. Local control cabinets should include terminal strips for tieing in I-O for central control and process monitoring. The central control and process monitoring PLC system will be furnished by others.

C. Local electrical motor start/stop stations with light indicators shall be included with the system. Motor starters and interconnecting field wiring, etc., will be furnished and installed by others.

D. Data and information are contained herein submitted to establish minimum acceptable design requirements and to provide reference data to engineer the system. Their inclusion, however, does not imply, nor shall it be construed that Buyer has designed the equipment or components covered by this inquiry. It shall be the responsibility of the Seller to ensure that the equipment has been designed, fabricated, and tested in accordance with all Buyer specifications hereto attached, engineering codes, standards, and government regulations applicable to the specified service.

E. The Seller shall furnish all labor, materials, drawings, tools, transportation, and equipment necessary to design, engineer, fabricate, furnish, and deliver to the jobsite. The Seller shall supply the necessary startup and erection assistance to adjust, test, and demonstrate the performance of the dried product handling system described herein. The system's completeness and working ability shall be demonstrated with a field performance test before final acceptance by the Buyer.

F. The following shall be included as a minimum as part of the scope of supply of the dried product handling system:

1. Drag Flight Conveyor (H-3001)

2. Local control panel.

3. Equipment supports, platforms, ladders, handrails, and guards.

4. All other equipment including, but not limited to, seals and gasketing, piping, local instrumentation, skid wiring and conduit, and controls within the equipment boundaries.

5. All the instrumentation, controls, and equipment as identified on the P&IDs.

G. The following items will be furnished by the Buyer and shall not be included as part of the scope of supply except as noted:

1. Motor starters.

2. Lighting.

3. Operating personnel, other than supervisory for startup and testing.

4. Power and external control wiring from motor control center and control panels to local panels.

5. Material unloading and storage at the jobsite.

6. Concrete pad, foundations, and anchor bolts.

7. Field assembly and erection. Except Seller must provide complete erection and installation instructions and Seller must quote per diem rate for field service personnel.

8. All utilities.

9. Field performance testing.

1.5 SUBMITTALS

A. Bid Documents

The attached technical data sheets shall be filled out as completely as possible and submitted with the proposal along with sketches, diagrams, and other supporting material listed below. Seller shall provide the following data in its entirety with the bid documents:

1. Make, model, and weight of each piece of equipment

2. Major component cost information

3. Delivery schedule

4. Point of manufacture

5. Detailed scope of work with list of exceptions to inquiry defined scope

6. Equipment outline dimensions with interface points shown

7. Descriptive literature for all equipment furnished

8. Materials of construction

9. Completed technical data sheets.

10. General arrangement drawings plan and elevation

11. Motor list with manufacturer, hp, rpm, frame, and type

12. All utility requirements summarized in tabular form

13. Recommended spare parts, special tools and fixtures for field assembly (lifting slings, spreader bars, etc.) and maintenance of the system with pricing for one year and five years of operations. A detailed description of the spare parts, special tools and fixtures shall be supplied after the purchase order award.

B. Drawings and Manuals

The following drawings, data, and manuals shall be submitted after award of purchase order but prior to delivery of equipment:

1. Anchor bolt location and loading drawing for foundation design

2. Structural calculations for support structures

3. Detailed control schematics, wiring diagrams, and description of equipment furnished by the supplier

4. Assembly drawings on the equipment; drawings shall show space required for service and maintenance.

5. Detailed arrangement and cross-section drawings including physical dimensions, support structure, equipment mounting arrangements and details, component interfaces, walkways, ladders, accessway, and foundation requirements including point loadings and anchor bolt details, etc., shall be submitted for review and approval

6. Operation and maintenance manuals

7. Installation instructions

8. Nondestructive testing documentation

9. Completed instrument data sheets including instrument ranges, serial numbers, etc.

10. List of ship-loose items and erection description.

Items 1, 2, 3, 4, and 5 to be supplied within six weeks of receipt Seller's purchase order. Items 6, 7, 8, 9, and 10 to be supplied two weeks prior to shipment.

C. Submittal Format

Drawings and data submitted for approval shall be in the form of one reproducible (sepia or other transparency) and two blue lines for sizes larger than 11 by 17 inches. Smaller sizes may be actual catalog cuts or good photography. Final CERTIFIED drawings must be submitted as mylars or on CAD media in Autocad (Release 13) format.

D. Drawings and Manuals

All operation and maintenance manuals, installation instructions, and storage instructions shall be submitted in ten bound copies.

E. Spare Parts and Special Tools

After purchase order award, the Seller shall supply a list of recommended spare parts, special tools and fixtures for field assembly and maintenance of the system. The list shall include the following information:

1. Quantity - The number of spare parts or components the System Fabricator recommends to ensure continued operation for one year and five years.

2. Item - Description of spare part component.

3. Where used - Name of equipment item spare part component is used on.

4. Manufacturer's Part No. - Item manufacturer's part number or model number. This <u>must</u> be original manufacturer's part number and <u>not</u> a number assigned by Fabricator.

5. Manufacturer - Name of company that manufactured the component part.

6. Tag No. - Buyer's piping and instrumentation diagram (P&ID) Tag No. that identified equipment item spare part is used on.

7. Fabricator's No. - System Fabricator's equipment identification number used to identify equipment item on their drawings.

8. Price - Price at which Buyer will purchase component part from System Fabricator.

9. Delivery - Time required from purchase order to delivery of component part from System Fabricator to Buyer.

1.6 QUALITY ASSURANCE

A. All workmanship shall be in accordance with and equal to the best shop practices recognized within the industry.

B. Vendor shall provide all quality control procedures, inspections, and testing to the extent necessary to assure that all work is performed in accordance with this specification.

C. Inspections that IT deems necessary will be made at the following times:

1. During fabrication at SELLER's shop.

2. After fabrication at SELLER's shop.

3. Upon receipt at IT facilities.

4. After installation at job site.

D. Inspections will cover the following areas:

1. Workmanship.

2. Materials of construction.

3. Transit damage.

4. Handling damage.

E. Inspection conditions.

1. The inspector must have complete access to the entire piece or pieces of equipment.

2. The vendor will furnish a qualified person to assist and accompany the IT inspector during the entire inspection.

1.7 DELIVERIES, STORAGE, AND HANDLING

A. Store in a clean, dry place and protect from weather prior to shipment. Provide protection from weather and damage during transit.

B. Loose items, if any, shall be tagged and delivered in a standard commercial package.

PART 2 PRODUCTS

2.1 PROCESS DESCRIPTION

A. Bulk waste material will be dried in a rotary dryer from an average moisture of 40% (wet basis). It will be dried to its optimum moisture for compaction of 10% (wet basis) on average.

The rotary dryer is maintained under a negative pressure to prevent fugitive emissions. The dried product shall gravity drain out of the dryer into a discharge chute (by others) and onto a drag flight conveyor (H-3001). A column of material shall be maintained in the discharge chute to prevent air infiltration from the product handling system back into the rotary dryer. The feed rate into the chute will be governed by the feed rate into the dryer. The discharge rate out of the chute shall be governed by the speed of the drag flight conveyor and determined by level indication within the chute. The height of the material column in the discharge chute will be maintained within a range that will maintain the seal but not allow material to back up in the dryer. The drag flight conveyor speed shall vary to maintain the material column in the chute for varying throughput. The throughput will vary from 2 tph to 30 tph.

B. The drag flight conveyor (H-3001) will have an inclined section that will elevate the dried product and discharge it into a bin were it will be transported by front end loader for further blending or disposal. The discharge elevation shall allow access for the front end loader.

2.2 WASTE CHARACTERISTICS

A. The characteristics of the dried product from the rotary dryer will be waste solids including: soil, filter cake, lime, hydrated salts and shredded debris. The chloride content of the waste is high (3% by weight) and should be considered in the material selection. A shredder system (supplied by others)

will reduce all of the bulk solids to a particle size of minus 4 inches. The bulk density will range between 80 lb/ft^3 and 150 lb/ft^3. The average bulk density will be 90 lb/ft^3 and 10% moisture (wet basis). The bulk temperature of the dried product will range between 200°F to 250° during normal operation. During process shut down the last heel of material discharging from the dryer will likely be bone dry and dusty. It is anticipated that the material temperature will approach the temperature of the dryer and will range from 600°F to 800°.

2.3 SPECIFIC DESIGN REQUIREMENTS

A. General

1. The design conditions are specified to serve as a guide for the Seller.

2. Local control cabinets should include terminal strips for tieing in I-O to the central control system (CCS). The CCS (PLC based) will be furnished by others. Space shall be provided on the control skid for mounting remote terminal unit cabinets for the CCS.

3. The system shall be designed for continuous outdoor service. The system shall operate 24 hours a day, 350 days per year.

4. The equipment will be shipped to the site as large components. It shall be assembled in the largest units possible for ease of erection and to minimize site-specific preparation and foundations. The system and its components shall be shop assembled as completely as possible.

5. Materials of construction shall be selected by Seller and shall be suitable for the operating service as defined in this specification.

6. The system shall be designed for ease of maintenance. Provisions shall be made for access to all internal parts for inspection, maintenance, and material clean out. Additional entry points and low point drains/plugs shall be included for decontaminating equipment with steam, water and/or liquids. Lifting lugs shall be provided where appropriate for lifting, loading, off-loading, and assembly of the equipment at the jobsite.

7. Electrical Power Supply

   a. Main bus: 480 volts AC, 60 Hertz (Hz), 3 phase

   b. Control: 120 volts AC, 60 Hz, 1 phase

c. Instrumentation: 24 V DC, 4 to 20 milliamp (ma) input and output for analog signals; 120 volts AC for discrete contacts.

8. Environmental Conditions - The equipment will be located outdoors and shall be designed and fabricated, to withstand the environmental conditions set forth below:

a. Ambient temperature: 12 to 92°F

b. Wind force: 80 mph basic wind speed
Exposure "C"
Importance Factor 1.15.

c. Seismic: Zone 1, Importance Factor 1.25.

d. Altitude: 580 feet above sea level.

9. All bearings shall have a minimum 50,000 hour B-10 life.

10. Seller shall design, provide detailed and checked shop drawings and design calculations, fabricate, assemble, and deliver equipment and accessories to make a complete job as called for in this specification.

11. All speed reducers shall have an American Gear Manufacturer's Association (AGMA) service factor of 1.75 and couplings shall be a minimum of 1.75.

12. Noise levels shall meet requirements of Section 13310 - Noise Level Specification.

B. Platforms and Ladders

1. A platform shall be provided for access and servicing the drive of the drag flight conveyor. The deck shall be accessible from the ground level by a caged ladder.

2. Deck Construction - Deck flooring shall be 3/16 by 1 inch galvanized bar grating.

3. Handrails - Handrails 42 inches high with center bar and kick plate designed in conformance with OSHA standards shall be provided around each platform.

4. Ladders - All ladders shall be designed and installed to comply with OSHA standards. The ladders and cage shall be galvanized after

fabrication and designed to bolt to the supporting structure, where required. A safety bar or chain shall be provided at the ladder entrance.

C. Detailed Specification for the Drag Fight Conveyor

1. The Drag Flight Conveyor (H-3001) shall be a double strand, approximately 5 feet wide and approximately 50 feet long horizontal centers designed to handle a capacity of 30 tons/hr of dried waste weighing 130 lb/ft^3. The conveyor shall have a projected horizontal length of 50 feet consisting of a horizontal section of approximately 13 feet and a projected inclined section of 37 feet and a discharge elevation of 15 feet above grade.

2. The casing shall be constructed of a minimum 1/4 inch thick plate steel, conforming to ASTM A-36 specifications and shall be 5 feet wide by approximately 30 inches deep. The trough sections shall be properly stiffened with structural shapes. The horizontal and incline trough bottoms shall have a renewable 1/4 inch thick AR-235 steel liner.

3. As a minimum the conveyor chains shall be 6 inch pitch, heat treated, high alloy forged rivetless chain with an ultimate breaking strength of 130,000 pounds. The chain material shall have an ultimate strength of 230,000 psi and a yield point of 210,000 psi. The chain links and pins shall have a Brinell hardness of 460-512 Brinell throughout the cross section.

4. The head and foot sprockets shall have 4 teeth and a 15.75 inch pitch diameter and made of heavy steel with a Brinell hardness of 425 to 500 for the rim.

5. The flights shall be 50 inches wide x 4 inches deep x 1 inch thick, T-1 abrasion resistant steel flats attached to the chains at 24 inch centers by means of cast steel S-22 attachments having a Brinell hardness of 340 to 280. The S-22 attachments shall be attached to the chain with A-325 high strength bolts.

6. The head shaft, turn shaft and take-up bearings shall be of the self-aligning, ball or roller bearing, pillow block type, mounted on a structural steel frame. The take-up bearing frames shall allow a minimum 12 inch adjustment. All bearings shall be complete with grease fittings and extended piping.

7. All shafting shall be made of commercial grade steel and shall be true and straight. The head shaft shall be a minimum 4-7/16 inch diameter. The take-up shafts shall be a minimum 3-7/16 inch diameter. All shafts 2 inches diameter and larger shall be at a minimum made of C-1045,

turned, ground and polished carbon steel. All shafting under 2 inches diameter shall be at a minimum made of cold drawn C-1018 carbon steel

8. All shafts passing through the conveyor casing shall be furnished with lip type dust seals consisting of neoprene mounted in a cast iron or fabricated steel housing.

9. The conveyor shall be driven by a minimum 5 hp, 1200 rpm, TEFC, high efficiency chemical duty electric motor, wound for 460 volt, 3 phase, 60 hertz current. The motor shall be coupled with a gear reducer unit having a mechanical rating at least 50% higher than the motor name plate horsepower. The reducer shall be of the helical gear inline shaft type. The gear housing shall be of steel or cast iron construction, of substantial design to assure permanent alignment of gears, and have adequate oil capacity for gear lubrication. The gear reducer shall be rated for AGMA class 2 service.

10. Reducer bearings shall be anti-friction type. The reducer shaft shall have sufficient overhung load capacity to accommodate a chain and sprocket drive from the low speed shaft. The motor and reducer unit shall be accurately aligned together with an approved coupling. The reducer shall have provisions for mounting the motor. The reducer shall be mounted on slide rails to permit adjustment of the drive. An OSHA approved coupling guard shall be provided.

11. The conveyor head shaft shall be driven by an oil lubricated roller chain drive from the gear reducer. The chain shall have carbon steel side bars with high carbon, heat-treated steel pins and roller having case hardened steel housing. The drive chain shall be enclosed in an oil-tight case with removable hat for easy access to shear key. The driven sprockets and drive sprockets shall be of chilled alloy cast iron conforming to ASTM A-48 Class 35. The drive sprocket shall be keyed and set screwed to the reducer shaft. The driven sprocket shall be furnished with a shear key hub, extended to permit shear key replacement without removing the chain case. The shear key counter hub shall be keyed and set screwed to the head shaft. The shear keys shall be designed for the full motor horsepower and for easy replacement. The keyways for shear keys shall be hardened.

12. The conveyor shall be adequately supported at intermediate points throughout its length. The head section of the conveyor shall be supported on an access platform. This platform shall be supplied with all the necessary grating, handrails and ladder. The platform shall be a minimum 9 by 10 feet.

13. The conveyor shall have a variable speed adjustment. The speed shall range to accommodate a throughput of range from 2 tph to 30 tph. The conveyor shall be designed and the drive capable of pulling out after a power outage. The conveyor motor shall be designed for a minimum service factor of 1.15. The motor shall have a starting torque of at least 225 percent of full load requirements. The conveyor and drive shall be capable of jog reversing service.

14. The conveyor and supporting structure shall be designed to move out from under the rotary dryer breaching for maintenance access. The conveyor shall have support wheel assemblies on all support points for mounting on rails parallel to the conveyor. Rails shall be specified and supplied by Seller. Seller shall determine rail length required to completely remove conveyor from beneath the rotary dryer breaching.

2.4 LABELING

A. Each item shall have a manufacturer's standard nameplate permanently attached at a location that is easily readable. The nameplate shall contain the following information, as applicable:

1. Item description.
2. Item number/tag number.
3. Manufacturer's name.
4. Purchase order number.
5. Date of manufacture.
6. Capacity.

2.5 FABRICATION

A. Bolt holes in structure members shall be drilled or punched. Burning of holes will not be permitted.

B. Flange bolt holes shall straddle normal centerline of unit.

C. Nozzles and flanged joints 152 mm (6 inches) or smaller shall be fabricated with flat-face flanges. Facing shall be suitable for type of gasket used. Seller shall state types and materials of gaskets used subject to Buyer review and approval.

D. Seller shall lubricate external bolting with a metallic-base waterproof lubricant to prevent galling in use and aqueous corrosion during testing, shipping, and storage. Lubricant shall be applied to the full length of the thread.

E. Seller shall furnish covers, bolts, and gaskets for covered openings and shall furnish screwed plugs of similar material for couplings.

F. Welding

1. Seller's responsibilities shall include, but shall not be limited to, the following concerning welded components:

   - Weld appearance
   - Dimensional accuracy
   - Removal of all weld splatter
   - Prevention of flaws such as cracks, porosity, unfilled craters.

2. Seller shall be responsible for, but shall not be limited to, the following concerning inspection of the work during welding:

   - Welding process
   - Cleaning
   - Joint preparation
   - Filler metal
   - Qualified welding procedure
   - All welding by AWS or ASME code certified welders
   - Nondestructive testing.

3. All welding shall meet the inspection requirements of the appropriate sections in the latest edition of the structural welding code of the AWS.

4. Any material or workmanship that is rejected by the Buyer or by his designated representative shall be replaced or repaired promptly by the Seller to the satisfaction of Buyer.

5. All production and repair welding shall be in accordance with the latest issue of the Structural Welding Code of the AWS D1.1-90.

6. All welders shall be qualified in accordance with the requirements of the latest issue for the structural welding code of the AWS.

G. Machinery guards.

1. Guards shall be provided for all rotating shafts, pinch points, etc. per OSHA requirements.

2. Removable machinery guards that are large or difficult to handle, regardless of total weight, must be equipped with handles.

H. Inspection

1. Supplemental to the inspection by the Seller and prior to shipment, a Buyer's representative will inspect the system. Seller shall notify seller in writing when the system or key components of the system are available and ready for inspection.

2. Inspection and approval by the Buyer's agent shall not relieve the Seller from compliance with these specifications.

I. Lubrication

1. Seller shall be responsible for providing a recommended lubrication list for each piece of equipment. The lubrication systems shall be complete and operable systems with all controls and appurtenances furnished.

2. Lubrication systems for rollers and gear boxes must be designed for conditions specified. Seller shall supply Buyer with all drawings and information required to describe the recommended lubrication systems.

PART 3 EXECUTION

3.1 MOTORS AND ELECTRICAL EQUIPMENT

A. All motors shall be 3-phase 380-volt (V), totally enclosed fan cooled (TEFC). Control voltage will be 120V alternating current (AC). All motors shall be non-overloading with a 1.15 service factor. All motors and electrical equipment furnished under this specification shall be in accordance with Section 15170 - Motors.

B. Area Electrical classification for this equipment is unclassified.

3.2 INSTRUMENTATION AND CONTROLS

A. The Seller shall provide the basic design for instrumentation and control (I&Cs) systems where required by this specification, and shall also provide general criteria establishing quality and characteristics of hardware. All Seller-provided instrumentation shall be in accordance with Section 16900 - Instrumentation and Control.

B. Instrumentation shall be electronic utilizing 4 to 20 mA, 24 VDC for analog signals and 120 VAC for discrete signals. RF transmitters are acceptable with prior approval of Buyer.

3.3 MATERIALS

A. All materials furnished or incorporated in the fabrication shall be new. Materials shall comply with the following requirements and specifications. Materials required, but not specified below, shall be those best suited for the intended use considering service, function, strength, and durability. Materials containing asbestos shall not be used without prior approval of Buyer.

B. If, in the opinion of the Seller, some other material or materials are better suited for the intended service conditions, Supplier shall submit full information and obtain the Buyer's written concurrence for the proposed alternative material. Seller shall certify that materials used are compatible with intended service and environmental conditions.

C. The materials used shall conform to ASTM standards.

3.4 SURFACE PREPARATION AND COATING

A. All motors and subsupplier-furnished standard items may be shop-primed and factory-finished with the subsupplier's standard coating. All such items shall be identified in the Seller's cleaning and coating procedures.

B. All items not included in Paragraph A shall be cleaned and coated by the Seller except for machine-finished surfaces and corrosion-resistant surfaces. Machined surfaces of ferrous metals, including threaded holes, that will be exposed shall be cleaned and coated with an acceptable rust-preventive compound.

C. Where interior coatings are not required, the interior surface shall be thoroughly cleaned to remove all mill scale, spatter, and other debris and deposits that may come loose in service.

D. All ferrous surfaces and structural steel shall be primed. All fabricated carbon steel shall be sandblasted and primed.

E. Refer to Section 09900 - Painting for complete surface preparation, priming, and finish coat application details including exterior hot surfaces. Finish color shall be Number 205, Light Gray for cold surface and Number 206 for hot surfaces.

3.5 ASSEMBLY AND TESTING

A. All equipment shall be shipped, assembled to the maximum practical extent consistent with shipping limitations.

B. Shop tests, where applicable, may be witnessed by Buyer; however, Buyer may elect to waive witnessing any of these tests. Buyer requires at least 5 days notice and a confirmation 48 hours before starting each test.

3.6 SERVICE REPRESENTATIVE

A. The Seller shall provide the services of erection and startup advisers at the construction site to advise Buyer field personnel and to ensure that all of the equipment that the Seller supplies is properly installed and commissioned. The scope of these services shall include, but not be limited to, the following:

1. Inspection and dimensional check of foundations.

2. Installation and alignment of seals, drive gears, and motors.

3. Controls and instrumentation checkout.

4. Equipment startup.

B. The bid shall include an allowance for 1 weeks field support at the jobsite. The bid shall also include all travel and temporary living expenses for the field service personnel.

3.7 FIELD PERFORMANCE TEST

A. The Seller shall have full responsibility for compliance with the requirements of the specifications contained herein. Review and/or approval of drawings, data, or specifications by Buyer with regard to general design and controlling dimensions does not constitute acceptance of any designs, materials, or equipment that will not fulfill the functional or performance requirements established herein.

B. After the system has been installed, and after the Seller has inspected the installation and certified that it is in accordance with the Seller's recommendations, a performance test will be conducted by the Buyer at a time to be mutually agreed upon with the Seller. The tests will be performed by Buyer in the presence of the Seller.

C. Faulty performance or any other defects, if determined by the Buyer to be due to seller-furnished items or service, shall be corrected to Buyer's satisfaction at Seller's expense within a negotiated time.

D. The field performance test shall be established prior to award.

1. The bid shall include an allowance for 1 week of a field service representative to witness the performance test.

2. All costs associated with travel and temporary living expenses for the field service personnel shall be included with the bid.

3.8 WARRANTY

Seller shall warrant all goods furnished against defects in material and/or workmanship for a period of twelve (12) months from initial operation or eighteen (18) months after shipment, whichever first occurs. Seller shall repair or replace defective goods at no cost to the Buyer.

-End of Section-

ATTACHMENT 1

TECHNICAL DATA SHEETS

The data sheets in the following sections shall be completed in their entirety by the Seller and included with the proposal.

Ash Cooling System Technical Data Sheet

Manufacturer: _____
Width: _____
Length: _____
Design capacity: _____
Operating speed: _____
Incline angle: _____
Discharge height above grade (15 ft minimum): _____
Carry-through construction: _____
Conveyor chain: _____
Flights: _____
Drive motor: _____

Section 11182
Indirect Dryer Performance Specification

Operable Unit 1
Revision A

IT Corporation
312 Directors Drive
Knoxville, TN 37923

SECTION 11182
INDIRECT DRYER PERFORMANCE SPECIFICATION
TABLE OF CONTENTS

		PAGE
PART 1	GENERAL	1
1.1	SECTION INCLUDES	1
1.2	REFERENCES, CODES, AND STANDARDS	1
	A. General	1
	B. Reference Specifications (Sections) and Documents	1
	C. Codes and Standards	2
1.3	SUBMITTALS	4
	A. Requirements	4
	B. Submittals Required with Bid Package	5
	C. Deliverables Required after Award, during Execution, and at Project Closeout	6
1.4	QUALITY ASSURANCE	8
	A. Quality Assurance Program Requirements	8
	B. Source Inspections/Test	10
1.5	SELLER'S STATED DEVIATIONS AND SUBSTITUTIONS	10
	A. SELLER'S Responsibility	10
	B. IT's Responsibility	10

SECTION 11182
INDIRECT DRYER PERFORMANCE SPECIFICATION
TABLE OF CONTENTS (CONTINUED)

		PAGE
PART 2	PRODUCTS	10
2.1	MATERIALS AND EQUIPMENT	10
	A. Responsibilities for Materials and Equipment	10
	B. Materials and Equipment to be Provided by SELLER	11
	C. Services to be Provided by SELLER	12
	D. Items to be Provided by IT	12
	E. Fasteners	13
2.2	TECHNICAL REQUIREMENTS	13
	A. General	13
	B. System Description	13
	C. Operating Conditions and Requirements	15
	D. Mechanical Requirements	18
	E. Control and Instrumentation Requirements	32
	F. Electrical Requirements	38
	G. Structural Requirements	38
	H. Design Interfaces	39
2.3	MATERIALS OF CONSTRUCTION	40
2.4	FABRICATION REQUIREMENTS	41
	A. General	41
	B. Welding	41
	C. Refractories	42
PART 3	EXECUTION	42
3.1	TESTING AND INSPECTION	42
	A. General	42
	B. Integrated Plan	42
	C. Witnessing and Notification	43
	D. Proposed Procedures	43
	E. Weld Inspection	43
	F. Weld Repair Procedures	43
	G. Tolerances	43

SECTION 11182
INDIRECT DRYER PERFORMANCE SPECIFICATION
TABLE OF CONTENTS (CONTINUED)

		PAGE
3.2	EQUIPMENT IDENTIFICATION	44
3.3	FINISH AND PAINTING	44
3.4	PRODUCT DELIVERY AND ACCEPTANCE	44
	A. Packaging	44
	B. SELLER'S Instructions	45
	C. Receiving Inspection	45
	D. Handling and Storage	45
3.5	ERECTION AND INSTALLATION	45
3.6	FINAL ACCEPTANCE METHODS	46
	A. Preconditions	46
	B. Methods of Acceptance	48
APPENDICES		
	1. Supporting Information	

SECTION 11182
INDIRECT DRYER PERFORMANCE SPECIFICATION

PART 1 GENERAL

1.1 SECTION INCLUDES

This specification defines the overall engineering, design, fabrication/manufacturing, shop testing, packaging, delivery, and field testing of the indirect dryer system, complete with all necessary equipment, controls, and instrumentation. It also defines the requirements for providing technical assistance for installation and acceptance testing.

This specification is prepared to be used as a support document with the Request for Proposal (RFP) Package.

1.2 REFERENCES, CODES, AND STANDARDS

A. General:
Equipment and materials of construction shall conform to the requirements of this specification and to the SELLER'S standard or recommended design for the intended service. Equipment shall conform to this specification, and to acceptable industry standards of engineering, design, and workmanship.

The intent of this specification is to define all the requirements for the entire indirect dryer system for bidding purposes. It is not the intent of this specification to restrict the design of the indirect rotary dryer system and its components. The specification requirements for equipment/components and material are intended to establish a minimum level of offering and should not be construed as limiting the SELLER in offering higher grade equipment/components and material which will provide comparable service.

The SELLER may propose different components than those specified as additional alternatives, providing they meet the technical requirements specified in Article 2.2. These alternatives shall be included in the bid package. Also, the SELLER shall take exception to the specification when conflicts exist. Both SELLER's alternatives and exceptions shall be stated according to the requirements of Article 1.5. The SELLER will be selected and the equipment package will be purchased based on the requirements of the final purchase specification.

B. Reference Specifications (Sections) and Documents: Specifications and documents listed below are part of this specification.
1. Section 09900 - Painting General
2. Section 13310 - Noise Level Specification
3. Section 13200 - General Tanks and Vessels

Article 1.2 B (continued)

4. Section 15050 - Piping and Accessories
5. Section 15080 - Piping Specialties
6. Section 15250 - Insulation
7. Section 15170 - Motors
8. Section 16900 - Instrumentation and Control
9. Supporting Information:
   a. Pit Waste Characterization Data (Appendix 1)
   b. Surrogate Feed Drying Test Data (Appendix 1)

C. Codes and Standards:
SELLER shall comply with the codes and standards referenced in this paragraph. The SELLER shall state exceptions to these standards in accordance with the requirements of Article 1.5.

1. Air Movement and Control Association (AMCA):
   a. AMCA 99 Standards Handbook.
   b. AMCA 210 Test Code for Air Moving Devices.
2. American Bearing Manufacturers Association (ABMA):
   a. All applicable standards.
3. American Gear Manufacturers Association (AGMA):
   a. All applicable standards
4. American Institute of Steel Construction (AISC):
   a. AISC M016-89
      Manual of Steel Construction - Allowable Stress Design (ASD) (Ninth Edition)
   b. AISC S302-86
      Code of Standard Practice for Steel Buildings and Bridges
   c. AISC S329-85
      Specification for Structural Joints using ASTM A325 or A490 Bolts - Allowable Stress Design
   d. AISC S335-89
      Specification for Structural Steel Buildings, Allowable Stress Design and Plastic Design (ASD)
5. American National Standards Institute (ANSI):
   a. ANSI A10.13-89
      Construction and Demolition Operations - Steel Erection - Safety Requirements
   b. ANSI A14.3-93
      Safety requirements for Fixed Ladders
   c. ANSI C2-93
      National Electrical Safety Code
   d. ANSI Y14
      Dimensioning and Tolerancing

Article 1.2 C (continued)

6. American Society of Civil Engineers (ASCE):
   a. ASCE 7-93
      Minimum Design Loads for Buildings and Other Structures
7. American Society of Mechanical Engineers (ASME):
   a. ASME
      Boilers and Pressure Vessel Codes, 1992
   b. ASME (USAS) B4.1-67
      Preferred Limit and Fits for Cylindrical Parts
8. American Society for Testing and Materials (ASTM):
   a. ASTM A29/A29M, Rev. A-93
      Steel Bars, Carbon and Alloy, Hot Wrought and Cold Finished
   b. ASTM A36/A36M, Rev. A-93
      Structural Steel
   c. ASTM A148/A148M, Rev. B-93
      Steel Castings, High Strength for Structural Purposes
   d. ASTM A307-94
      Carbon Steel Bolts and Studs, 60,000 Tensile Strength
   e. ASTM A325-93
      Structural Bolts, Steel, Heat Treated
   f. ASTM A500-93
      Cold-Formed Welded and Seamless Carbon Steel Structural Tubing in Rounds and Shapes
   g. ASTM A563-93
      Carbon and Alloy Steel Nuts
   h. ASTM A564/A564M, Rev. A-92
      Hot-Rolled and Cold-Finished Age-Hardening Stainless and Heat-Resisting Steel Bars and Shapes
   i. ASTM B3-90
      Soft or Annealed Copper Wire
   j. ASTM C109-93
      Standard Test Method for Compressive Strength of Hydraulic Cement Mortars
   k. ASTM C827-87
      Standard Test Method for Change in Height at Early Ages of Cylindrical Specimens from Cementitious Mixtures
   l. ASTM F436-93
      Hardened Steel Washers
9. American Welding Society, Inc. (AWS):
   a. AWS A2.4-93
      Standard Symbols for Welding, Brazing, and Nondestructive Examination
   b. AWS D1.1-94
      Structural Welding Code-Steel

Article 1.2 C (continued)

c. AWS QC1-88
Standard for AWS Certification of Welding Inspectors, Fourteenth Edition

10. International Conference of Building Officials (ICBO):
    a. Uniform Building Code
11. International Society for Measurement and Control (ISA)
    a. ISA S-5.1-84
       Symbols and Identification
12. National Electrical Manufacturers Association (NEMA):
    a. NEMA 250-91
       Enclosures for Electrical Equipment
13. National Fire Prevention Association (NFPA):
    a. NFPA 101-94
       Code for Safety to Life and from Fire in Buildings and Structures
    b. All other applicable standards
14. Occupational Safety and Health Administration (OSHA):
    a. 29 CFR 1910
       Occupational Safety and Health Standards
    b. 29 CFR 1926
       Safety and Health Regulations for Construction
15. Ohio Basic Building Code (OBBC), 1995
16. Steel Structures Painting Council (SSPC):
    a. All applicable standards

1.3 SUBMITTALS

A. Requirements:
SELLER shall submit records, data, drawings, and documentation as requested and scheduled in accordance with the requirements specified below.
The SELLER shall maintain documents attesting to this procurement as records. The records shall be retrievable and protected against damage or loss.

All records generated as a result of this order, but not required to be submitted, must be stored and maintained in accordance with the SELLER's QA Program. IT reserves the right to have access to the files for the retention time specified by the SELLER in the SELLER's QA Program.

The SELLER shall prepare a documentation inventory transmittal sheet (listing all documents and number of pages) and attach this sheet to each set of documentation. Each set of documentation shall list IT's purchase order number, project number, and equipment piece number, and be consecutively numbered.

Article 1.3 A (continued)

B. Submittals Required with Bid Package:

1. Dimensioned outline drawings for the equipment and systems (general arrangement with elevations), including weights, space requirements (for all SELLER-provided equipment), anchor bolt locations (informative), and preliminary structural loadings. Drawings shall indicate the system and equipment interfaces as defined in Article 2.2, Paragraph H, and the fabrication sizes which IT will receive on site.
2. Materials of construction and associated design criteria and features of the major components (see Article 2.1, Paragraph B) of the indirect dryer system.
3. A weekly schedule (bar chart) of SELLER activities from date of award to delivery of the indirect dryer system. Activities shall include design review/approval processes, inspection of fabrication, shop testing, and delivery. The schedule shall indicate specified hold points which will be placed in the SELLER's production process, design, and fabrication to allow IT to review, approve design, and witness fabrication, inspections, and tests. IT shall be given 1 week to review and respond to SELLER's design deliverables.

   In preparation of the above schedule, the following shall be incorporated: IT shall be notified a minimum of 1 week in advance of the designated hold point dates for the above activities. The inspections of fabrication will include examination of the structure, dimensions, and workmanship; operation of moveable components; and review of shipping instructions.
4. A system description of drying process and operation.
5. Major equipment list with process duty outline specification and equipment sizes.
6. Electric motor list and wiring schematic for all electrical systems furnished.
7. Magnitude and location of all dynamic loads from all major equipment.
8. Conceptual Process Flow Diagram, including heat and material balances.
9. Utility requirements:
   a. Power (kw)
   b. Natural Gas (scfm, psig), note availability in Article 2.2, Paragraph C, Subparagraph 1.
   c. Water (gpm)
   d. Plant air (scfm, psig)
   e. Fuel oil
10. All pertinent major design data (outline data sheets) or information required to assemble and operate the system.
11. QA Program:
    The SELLER shall submit the QA Program as specified in Article 1.4.

Article 1.3 B (continued)

12. Submittal schedule:
The SELLER shall provide a submittal schedule.
13. Project Team:
The SELLER shall submit a breakdown of the management and organizational structure within the SELLER's company, and provide a list of resumes for key technical personnel and contacts.
14. List of References:
The SELLER shall provide a list of references. The references shall be clients for whom the SELLER has supplied currently operating indirect dryer systems comparable to the system specified herein. Reference shall include identification of the application, client name, address, and phone number.
15. The SELLER shall provide the terms and conditions of the SELLER's warranty for workmanship and materials.
16. Cost proposal (F.O.B. on FEMP site) with breakdown to include the following:
    a. Engineering and design.
    b. Rotary dryer (excluding furnace).
    c. Furnace (excluding burners and controls).
    d. Burners, controls, and the burner piping and instrumentation skid.
    e. Combustion-air supply fan.
    f. Recuperative heater
    g. Air supply fan
    h. Spray quench
    i. Furnace induced draft fan
    j. Stack
    k. Electric motors, instrumentation, and controls
    l. All structural supports and service platforms.
    m. All ductwork.
    n. Technical services for installation.
    o. Technical services for start-up support.
    p. Technical services for acceptance testing.
    q. Daily rate for operator training.
    r. Spare parts list with unit prices good for 1 year and 5 years.
17. Description of Microstation, AutoCADD, or DXF format to be used for submitting drawings.
18. List of instruments provided by SELLER.

C. Deliverables Required After Award, During Execution, and at Project Closeout:
1. Shop/Engineering drawings:
The SELLER shall prepare engineering drawings that illustrate the salient features of the indirect dryer. The drawings shall comply with ANSI Y14. The drawings shall include the information and specifications, relating to the assembly and secondary assemblies, necessary to inspect,

Article 1.3 C (continued)

assemble, and install the indirect dryer unit. The drawings shall specify the dimensions, tolerances, fits, anchor bolt settings, and operating weights. These drawings shall have a list of components with a reference to shop drawings and bill of materials needed for installation of that assembly. They shall delineate weld and inspection requirements, material specifications, and surface and heat treatments. Drawings may be supplemented by specifications and/or data sheets which are cross-referenced.

Shop drawings shall be provided for the assembly base frames and for the main frame. These drawings shall:

a. Indicate sizes, spacing, and locations of components and structural members, bolted connections, and welded connections.
b. Indicate welded connections with AWS welding symbols. Indicate net weld lengths.
c. State the vertical loads and lateral forces (wind and seismic) used in the design.

In addition, the drawings shall be in sufficient detail so that the indirect dryer system may be interfaced with required utilities and mating assemblies and equipment. These drawings shall be submitted to IT for approval.

After approval by IT, the SELLER shall submit drawings identified as "Certified for Construction." These drawings shall be submitted as two sets of full-size prints (30 inch by 42 inch maximum size. In addition, they shall be submitted in Microstation, AutoCADD, or DXF format on floppy disk. SELLER shall describe the format to be used in the bid package.

2. Spare parts list:
The SELLER shall provide a final parts list and a recommended spare parts list. The spare parts list shall be identified on the drawings' bill of material section. This spare parts list shall be confirmed and updated by the SELLER at the time of project close-out to reflect any additions or changes in spare parts. The spare parts shall identify the supplier, the supplier's part number, and the sales office responsible for the Cincinnati, Ohio, area.

3. Installation, Operation, and Maintenance (IOM) Manuals:
The SELLER shall prepare bound IOM manuals which, as a minimum, contain:

a. Installation instructions for all assemblies and subassemblies as specified by corresponding drawings.

Article 1.3 C (continued)

b. Operating procedures, including start-up and emergency shutdown (see operating modes under Article 2.2, Paragraph C, Subparagraph 2).
c. Instructions for maintenance.
d. Troubleshooting guide.
e. Maintenance schedule and service guide.
f. Instrument maintenance and calibration procedures.

The manuals shall be submitted to IT for review and approval a minimum of 6 weeks prior to the shipment of each assembly of the entire package. The SELLER shall furnish 10 bound copies and one reproducible copy of the approved manuals to IT to be included with the shipment.

4. Material Safety Data Sheets (MSDS) on all finishing products.

5. Manufacturer's Mill Certificate:
Factory mill certification that ASTM A325 bolts and other listed products meet specified requirements.

6. Mill Test Reports:
Submit reports indicating structural strength, destructive, and non-destructive test analysis for each batch of steel from each supplier.

7. Acceptance Test Plan and Procedures:
The SELLER shall prepare Acceptance Test Plan Procedures and an Acceptance Test Plan that will cover the requirements for acceptance testing specified in Article 3.6. The plan and procedures must be approved by IT prior to application.

8. Engineering Calculations:
The SELLER shall submit complete calculations for structural design. The calculations and related drawings shall be stamped by a professional engineer licensed in the State of Ohio.

1.4 QUALITY ASSURANCE

A. Quality Assurance Program Requirements:
1. The SELLER shall maintain a Quality Assurance Program.
2. The Quality Assurance Program shall include the following items:
a. Design Control:
Provide a program to identify control measures used to ensure that design requirements, including quality standards, are defined and verified as applicable and are accurately represented in drawings, specifications, and procedures.

Article 1.4 A (continued)

b. Instructions, Procedures, and Drawings: The SELLER's activities affecting quality shall be prescribed by and performed in accordance with documented instructions, procedures, or drawings. These documents include criteria for acceptance.

c. Document Control:
Control the preparation, issue, and exchange of documents that specify quality requirements or prescribe activities affecting quality to ensure that correct documents are employed.

d. Inspection:
Plan and execute inspections to verify conformance to purchase order quality and technical requirements. These inspections shall be documented. Notification of IT is required at least 1 week prior to the performance of the inspection.

e. Test Control:
Plan and execute tests verifying conformance of an item or process according to written procedures which contain the test requirements and acceptance limits. These tests shall be documented. Notification of IT is required at least 1 week prior to the performance of the test.

f. Control of Test and Measuring Equipment: Control and calibrate all tools, gauges, instruments, and other devices used for activities affecting quality.

g. Inspection, Test, and Operating Status: Provide for the identification of acceptance status of items procured by tagging or marking, or documents traceable to the item required by the specifications.

h. Control of Nonconforming Items:
Provide for control of items or processes that do not conform to procurement document requirements. Nonconformances shall be controlled to prevent inadvertent installation or use, and shall be documented.

i. Quality Assurance Records:
Generate, compile, and maintain all program records that furnish documentary evidence of quality and shall provide records as specified by the procurement document.

j. Handling, Storage, and Shipping:
Provide procedures to control requirements specified in Article 3.4.

k. Corrective Action:
Provide procedures to implement corrective actions.

Article 2.1 A (continued)

B. Source Inspections/Test:
Control equipment shall be tested to ensure all indirect dryer component assemblies and sub-assemblies are functioning safely and according to operating parameters.

1. All shop testing requirements shall be handled according to the schedule submitted in accordance with Article 1.3, Paragraph B.
2. Successful completion of testing (both attended and unattended by IT) shall be confirmed by issuing certified copies of the test results to IT.
3. Acceptance testing at site:
Final inspection and acceptance at the FEMP will be in accordance with this specification and the following:
   a. Acceptance testing and inspection shall take place at the FEMP site with IT and the SELLER present in accordance with the requirements specified in Article 3.6.
   b. the successful completion of the inspections and acceptance tests and surveillance will be IT's method of final acceptance of the purchased system, as specified in Article 3.6.

1.5 SELLER'S STATED DEVIATIONS AND SUBSTITUTIONS

A. SELLER's Responsibility:
The SELLER is to submit in writing to IT exceptions or proposed changes to this specification as alternates in the bid package. Each exception or proposed change shall:

1. Identify the item (component) as specified in this specification.
2. Identify the criteria that cannot be met or proposed for change.
3. Present the proposal for resolution and/or for alternate.

B. IT's Responsibility:
All deviations from this specification or substitutions offered by the SELLER will be evaluated during bid technical evaluation by IT. However, these deviations and substitutions will not be evaluated if they are not properly presented in the bid package as required by this article. In addition, approved exceptions will ultimately result in revision to the specification to incorporate the exception.

PART 2 PRODUCTS

2.1 MATERIALS AND EQUIPMENT

A. Responsibilities for Materials and Equipment:

1. All deliverable materials and equipment as identified in Article 2.1, Paragraph B, shall be the responsibility of the SELLER. The SELLER is

Article 2.1 A (continued)

also responsible for the quality and compliance of the work of the SELLER's suppliers.

2. The SELLER shall be responsible for all engineering, design, fabrication, inspection, testing, checkout technical assistance, and delivery of all deliverable materials and equipment.

B. Materials and Equipment to be Provided by SELLER:

Item Number	Description	Quantity
1.	Indirect rotary dryer system with furnace complete with refractory and drum internals to minimize fouling	1
2.	Burner piping and instrumentation skid(s) for dual fuel service (natural gas and #2 fuel oil) complete with supply pipeline headers (air, fuel oil, and gas), manifolds with instrumentation, and controls per set of burners per zone, fittings, structural frame, and supports	1
3.	Recuperative heater designed to heat sweep air and combustion air using furnace off-gas	1
4.	Air supply blower supply sweep air and combustion air to the recuperative heater	1
5.	Instrumentation, controls, alarms, control panels, electrical wiring, and connections for safe and efficient operation of all equipment and controls	1 lot
6.	Combustion-air supply fan	1
7.	Electric motors:	
	a. Rotary dryer drive motor	1
	b. Rotary dryer auxiliary drive motor	1
	c. Combustion-air supply fan drive motor	1
	d. Air supply blower motor	1
	e. Furnace induced draft fan motor	1
	f. Other motors as specified by SELLER	TBD
8.	Maintenance platforms, walkways, structures	1 lot

Article 2.1 B (continued)

Item Number	Description	Quantity
9.	Ductwork between furnace and recuperative heater, between recuperative heater and combustion air fan, and between recuperative heater and discharge end of dryer (for sweep air)	1 lot
10.	Furnace induced draft fan and associated ductwork and controls with inlet spray quench system	1
11.	Furnace stack	1

C. Services to be Provided by Seller:
   1. Technical assistance and monitoring for compliance with site installation requirements for all items specified in Article 2.1, Paragraph B.
   2. Technical assistance for start-up and a readily available question-answering service.
   3. Technical assistance and monitoring for compliance with requirements for acceptance testing as specified in Article 3.1 and Article 3.6.
   4. Instrument inspection, testing, calibration, and tuning:
      a. SELLER shop checkout.
      b. Software checkout.
      c. Installation supervision.
      d. Field system checkout and start-up.

D. Items to be Provided by IT:
   1. All utilities and piping to the indirect rotary dryer burner piping and instrumentation skid (instrument air, process air [for use as atomizing air], natural gas, fuel oil, water, drain).
   2. Dryer feeder.
   3. Product discharge chute from the indirect rotary dryer product discharge flange.
   4. Combustion gas ductwork and support between the combustion gas exhaust manifold and the stack.
   5. Process off-gas ductwork and support from the indirect rotary dryer discharge head to the process off-gas treatment area.
   6. Electrical power supplies and field wiring.
   7. Unloading and storage of assemblies and subassemblies, installation of indirect dryer system.
   8. Concrete foundations and support pillars for the following items:
      a. Indirect rotary dryer system.
      b. Burner piping and instrumentation skid.
      c. Combustion-air supply fan.
      d. Recuperative heater.
      e. Air supply blower.

Article 2.1 D (continued)

f. Furnace induced draft fan.
g. Spray quench.
h. Furnace stack.
i. Maintenance platforms, walkways, and structures.

9. Control Room, located within 100 feet of the dryer.
10. Air exhaust system and connection to seal shrouds at feed and discharge ends.

E. Fasteners:

1. The SELLER is hereby given notice that the Fastener Quality Act of 1990 applies to the provision of fasteners. The SELLER certifies that suspect or counterfeit fasteners are not being provided or incorporated as part of an end item for delivery under this purchase order. The SELLER shall provide certification of specification conformance to IT upon request and agree to comply with all recordkeeping requirements by law.

2.2 TECHNICAL REQUIREMENTS

A. General:
The SELLER shall furnish all deliverable items identified in Article 2.1, Paragraphs B and C, to conform with the design requirements specified in this section.

The SELLER shall propose a proven design, including modifications, as required, to provide all concepts defined in the specification. All piping and flanges and fittings supplied with this equipment shall conform to requirements stipulated in the piping specification sections provided in Division 15. All structural components shall be provided in accordance with the structural requirements specified in Article 2.2, Paragraph G. All components, platforms, walkways, stairs, and guards (for rotating equipment) supplied by the SELLER shall conform to the applicable OSHA standards.

B. System Description:
Wastes removed from pits at Fernald Operable Unit 1 (OU1) will be dried in an indirect rotary dryer system. This system will consist of (1) an externally heated rotating cylinder (rotary dryer) to receive and dry wastes while advancing material from the feed head toward the discharge, (2) a multiple-zone furnace surrounding the rotary cylinder to generate heating gases by combusting natural gas and/or fuel oil, (3) a dual fuel (natural gas and #2 fuel oil) and air supply system to the burners,(4) burner management and dryer process control,(5) a recuperative heater to preheat combustion air and sweep air using furnace off-gas, (6) an air supply blower system to supply heated sweep air and combustion air, and (7) a flue gas cooling and withdrawal system. The combustion gases

Article 2.2 B (continued)

produced in each zone of the furnace by a set of burners will be controlled to set the rotary dryer shell at a temperature to be specified by the SELLER to meet thermal performance requirements. This temperature should be between 1200°F and 1600°F.

The SELLER shall select and justify the selected material of construction for the rotary shell, taking into account such factors as required thickness of material, length and diameter of the dryer, corrosion and oxidation by slagging salts, dissolved chloride salts, or degradation products of the listed materials in the waste, and feed rate. The SELLER shall use 316L stainless-steel as a baseline, and give a cost comparison for the selected material against the alloy selected by the SELLER.

The SELLER shall specify a corrosion allowance used for selection of shell thickness. This corrosion allowance shall be adequate to provide a shell life of at least eight (8) years, assuming continuous operation. The SELLER shall specify the corrosion rate and wear rate (from waste and mechanical means to remove fouling) used to define the estimated corrosion allowance. These data should be based on published corrosion and wear data obtained from the manufacturer of the selected alloy.

The indirect dryer system shall be designed to receive and process wet waste material of various moisture contents depending on the type of feed waste. Feed waste material will be received as screened waste with a maximum dimension of 4 inches. Screened material will be fed into the rotary dryer via an auger type feeder. This feeder will be purchased by IT and specified to meet dryer requirements. The dryer SELLER will be provided with the feeder specification and given the opportunity to bid on it.

The rotary dryer system shall consist of a cylindrical shell rotated with a variable speed drive. The shell shall be supported at each end with no intermediate supports.

The rotating cylinder shall be heated externally by a furnace, enclosing the rotary cylinder, with adequate length and diameter to provide adequate heat transfer to evaporate the required moisture from the waste feed. Heat energy for the indirect drying shall be produced in the multiple furnace zones by a set of burners located in each zone, using either natural gas, #2 fuel oil or a mixture of gas and #2 fuel oil as fuel for combustion. The burners shall be low NO_x generating burners. The number of zones used should be specified by the SELLER; however, a minimum of 4 zones shall be included. Burners shall be operated with adjustable primary air/fuel ratio, and adequate turn down to control the flame temperature so the rotating cylinder does not exceed its allowable shell temperature as specified by the SELLER. Exit gases from each

Article 2.2 B (continued)

furnace zone shall be collected into a header, from where they will be routed to the recuperative heater.

Heat energy from each furnace zone shall be indirectly transferred into the material advancing inside the rotating shell. This heat transfer from the furnace will take place through convection, conduction, and radiation. To ensure better mixing of the material inside, the shell shall be equipped with a means to agitate the bed of material. The selected means of bed agitation shall be placed inside the shell along the entire heated length. Evaporated water shall be swept from the dryer with a controlled flow of preheated air in a countercurrent fashion, and it shall be discharged at the feed end of the dryer.

The dryer shall be equipped with a mechanical means of continuously removing fouled material from the dryer shell. The waste may foul due to placisity (stickiness) at critical moisture contents, due to slagging of salts contained in the waste, or by pyrolysis of organics. Dryer sizing proposed by the SELLER should account for residual fouling anticipated in the dryer. The SELLER shall specify the proposed means to remove fouling and the size allowance specified to account for residual fouling.

A recuperative heater shall be provided to recover heat from furnace off-gas to preheat combustion air and sweep air. The recuperative heater shall be sized by the SELLER to provide a combustion air/sweep air temperature of at least 600°F. A bypass shall be provided to control this temperature to the allowable temperature for supply to the burners, as defined by the SELLER. Cooled furnace gas shall be drawn from the system using an induced draft fan. The SELLER shall supply a spray cooling system to cool the furnace gas to below 600°F prior to the induced draft fan. The stack shall have an overall height of at least 60 ft above grade.

Waste material continuously fed into the dryer will advance through the heated section, where it will be heated up to 200-250 degrees F. The SELLER shall specify how this is measured. Due to the heat transferred into the material, water will be evaporated, and some small amounts of organics contained in the waste will be vaporized. Preheated sweep air flowing counter currently with the advancing waste will carry off the vapors. The SELLER shall determine gas composition at the discharge point. A total heat and material balance shall be supplied by the SELLER.

Dried material with the 10 percent (wet basis) final moisture content will leave the heated section. Dried material will fall by gravity through the discharge head chute for further handling by IT.

C. Operating Conditions and Requirements:

Article 2.2 C (continued)

SELLER shall design equipment to meet the following minimal criteria:

1. Process Design Criteria:
   a. Particle size distribution: 100 percent <4 inches; 80 percent <200 mesh
   b. Feed moisture content: 30 to 200 percent (all moisture contents expressed on a dry basis [lbs water/lbs dry solids] x 100 percent). The average moisture content is estimated to be 67% on a dry basis (40% on a wet basis).
   c. Bulk density: 79 lbs/ft^3 at 200 percent moisture content, 126 lbs/ft^3 at 30 percent moisture content.
   d. Specific gravity of dried solids: 2.5 to 3.25.
   e. Feed composition: For details of pit waste composition, see Appendix 1, Section 2.0.
   f. Plasticity data: see Appendix 1, Section 6.0.
   g. Feed rate: The dryer shall be capable of processing at least 30 TPH of feed at 67% dry basis moisture content (40% wet basis) with a product moisture content of 10 percent (wet basis). SELLER shall determine processing rates for feed at 30, 67, 100, and 200 percent (dry basis) moisture content, with a product moisture content of 10 percent (wet basis). In each operating mode, the dryer shall be able to evaporate moisture at a minimum rate of 9 tph.
   h. Feed temperature: ambient (see Article 2.2, Paragraph C, Subparagraph 2).
   i. Dryer product temperature: 200-250 degrees F (operating). The SELLER shall specify the maximum product temperature during shutdown and upset conditions as a part of the bid package.
   j. Heat transfer: Indirect.
   k. Dried product moisture content: 10 percent, as a minimum design criteria. Maximum moisture content should equal no free liquid as prescribed by the paint filter liquids test (EPA SW-846, Method 9095).
   l. Process off-gas: Temperature, 250-700 degrees F; entrained solids lbs/hr = TBD by SELLER.
   m. Sweep air: Temperature 600°F; Volume, maximum = ratio of evaporated water present in the dryer, to sweep air volume TBD by SELLER.
   n. Minimum heat transfer area = 1700 ft^2 in heated zone. The SELLER is responsible to recommend the actual heat transfer area required to provide the treatment rate and moisture removal specified.
   o. Rotary dryer shell temperature, TBD by SELLER. Maximum = 1600°F; Minimum = 1200 degrees F.
   p. Temperature of outer furnace shell, maximum: 125 degrees F.

Article 2.2 C (continued)

q. Combustion gas outlet temperature (before recuperative heater): SELLER shall determine and include in the required heat and material balance.
r. Recuperative heater outlet temperature: SELLER shall determine and include in the required heat and material balance.
s. Combustion air temperature, inlet to burner manifold: 600°F minimum, maximum TBD by SELLER.
t. Natural gas characteristics: heating value = 1,027 Btu/ft^3; pressure = 47 psig; availability = 833 scfm in 6-inch pipeline; composition = CH_4 - 96 percent, C_2H_6 - 1.9 percent, N_2 - 0.036 percent, C_nH_n - 2.064 percent.
w. Fuel oil characteristics: #2 fuel oil delivered at a 20 psig supply pressure.
x. Dryer waste capacity: The dryer shall be designed to allow a minimum of a 90 minute residence time for waste in the dryer at the design feed rate (see item g.)
y. Process air characteristics: 80 psig, flow requirement TBD by the SELLER.

2. General:
The indirect dryer system shall be operated at the FEMP site at Fernald, Ohio. The indirect dryer will be located under a roofed structure with partial siding and subject to weather-related temperature variations, wind, wind-driven rain, and earthquake loading criteria. The feed head and the discharge head may need to be insulated for personnel protection. The SELLER shall ensure that all conductive surfaces be designed to stay at or below 125 degrees F, and that nonconductive surfaces such as insulation or plastic stay at or below 150 degrees F, or that a protective guard shall be supplied to keep personnel from contacting such surfaces.

The SELLER shall specify any special environmental conditions, including temperature and moisture protection, that must be provided for any equipment, instrumentation (hardware and software), or material. The following are the environmental and operating conditions:

a. Ambient conditions outside (summer, winter):
Summer:
Dry bulb temperature: 92 degrees F
Wet bulb temperature: 78 degrees F
Winter:
Dry bulb temperature: -1 degrees F

Article 2.2 C (continued)

b. Ambient conditions for control room:
Dry bulb temperature: 72 ± 5 degrees F
Relative Humidity: 38-50 percent

c. Plant elevation: 578 feet above sea level

d. The system shall be designed for operation in seismic zone 1 as defined in the Uniform Building Code.

e. Operating schedule:
Operating days/week - 5
Operating shifts/day - 3
Operating hours/shift - 8

g. Operating modes:

1) Normal
The facility is operated at the normal flow rate as specified in Article 2.2, Paragraph C, Subparagraph 1.g.

2) Hot idle
The facility is idled below operating temperatures, and not drying feed. All burners either shut off or set to low fire mode.

3) Heat-up
The facility is started by heating up the system, from cold status to the thermal conditions of normal operations.

4) Cool down
The facility is cooled down from any of the above operating modes to ambient conditions.

5) Normal shutdown

6) Emergency shutdown

7) Restart after normal shutdown

8) Restart after emergency shutdown

h. Fire protection:
The indirect dryer system shall comply with the applicable NFPA codes and standards. In addition, the SELLER shall identify any special fire protection requirements needed by any purchased item (equipment, instruments, hardware, software, material).

D. Mechanical Requirements

1. Indirect rotary dryer:
The indirect rotary dryer assembly shall include the following sub-assemblies and components.

a. Rotary Dryer Shell:
Rotary dryer cylindrical shell material of construction shall be selected by SELLER. It shall be a heat- and corrosions-resistant steel alloy to withstand operating conditions, and be of rolled steel plate, welded construction. The thickness of the shell shall be determined by the SELLER based on the mechanical/structural requirements to ensure a design life of 8 years for the rotary shell operated at the design

Article 2.2 D (continued)

conditions. The rotary shell shall be reinforced at the riding rings support and at the drive girth gear.

Proper safety factors shall be applied calculating the working combined stresses to ensure that: (1) under operating conditions, tension and shear stresses will never exceed the material strength (yield stress, with the applied safety factors); (2) proper allowance is provided (0.3 mils per 1,000 hours) for oxidizing, carburizing, and sulfidizing environments on the furnace side; (3) Proper allowance is provided for corrosion and mechanical wear inside the dryer (TBD the SELLER); (4) deflection shall not exceed 0.0002 mils at the point of maximum movement between the supports. The SELLER shall provide calculations supporting thickness selection.

The rotary dryer shell shall accommodate two support riding rings, one at the feed end and one at the discharge end. It shall also accommodate one driving spur gear at the feed end, and seal assemblies at both ends. SELLER shall describe the complete design of the shell, riding rings, and driving spur gear. All applicable AGMA standards shall be adhered to.

The rotary shell shall have cylindricity tolerances on radius per ASME B4.1. The shell shall be built of steel plate, rolled into a circle, and welded in sections with circumferential joints as required. The shell sections shall have one longitudinal joint per circle. The SELLER shall specify number of sections required for optimum design, fabrication, shipping, installation, and operation. The SELLER shall state the maximum selection length and shall note if the entire length of the shall can be manufactured and delivered in one piece, as well as the proposed means of delivery (i.e., truck or rail).

The rotary shell shall be supplied with internals, to be specified by the SELLER. At a minimum, the rotary shell shall include internals that provide the following functions:

(1) A means to carry feed waste from the feed end into the "hot zone" of the dryer. This may be accomplished using feed spirals or other means to be specified by the SELLER. It should be noted that the dryer feeder will be specified to be capable of feeding the waste directly into the "Hot Zone" or as close as the mechanical design allows. Feeder spirals shall provide an additional feature for flexibility in operation. SELLER shall determine the need for a retainer ring on the feed end to prevent backspill into the feed head.

Article 2.2 D (continued)

(2) Shallow type inside flow disturbers or other means of flow distribution to be supplied through the entire heated length of the rotary dryer. SELLER shall design the disturbers to maximize heat transfer into the waste, and minimize caking of waste onto the rotary shell.

(3) A means to mechanically remove waste stuck to the sides of the shell continuously during operation. This may be accomplished using chains or other means to be specified by the SELLER. It should be noted that pilot tests on drying surrogates of FERNALD OU1 wastes experienced considerable fouling. The waste material is reported as being extremely sticky at certain moisture contents that will be present in the dryer. The waste also contains a high salt content, some of which may have melting points below 1200°F.

The rotary shell welding shall comply with ASME code Sections VIII and IX, with the exception that no code stamp is required (see requirements in Article 2.4, Paragraph B).

Materials of construction:

1) Shell plate - heat- and corrosion-resistant alloy TBD by SELLER.
2) Riding rings - Material and hardness to be specified by SELLER.
3) Roller - cast steel, material and hardness to be specified by SELLER.
4) All joints shall be double-butt welded.
5) Roller shafts - forged steel, to be specified by SELLER.
6) Spur gear - steel alloy and hardness to be specified by SELLER.
7) Feed head - TBD by SELLER.
8) Discharge head - TBD by SELLER.

b. Support stations assemblies:
Rotating cylinder shall be supported at two locations through the riding rings, riding on the carrying rollers assembly. Carrying rollers shall be of either forged or cast alloy steel with hot pressed and shrunk on forged alloy steel roller shafts. The entire carrying assembly, consisting of four bearings and two rollers, shall be mounted on a rigid structural steel frame with base plates and adjusting screws for proper alignment. Bearings shall be antifriction in pillow blocks with high temperature lubrication, and shall confirm to applicable ABMA standards.

The support station next to the drive assembly shall be provided with thrust rollers to limit the longitudinal movement of the rotating cylinder and to maintain alignment of the gear and pinion, as well as the riding rings with the carrying rollers.

Article 2.2 D (continued)

Thrust rollers, welded into hot-rolled steel shafts, shall be machined to match the thrust riding gear, which shall be tapered to the full downhill thrust.

Thrust rollers shall be mounted in heavy journal housings which shall be clamped together with two heavy steel rods. Housings shall be fitted with bronze journal bearings.

The two thrust rollers shall be mounted on the common steel frame with the riding rollers.

c. Drive assembly:
Rotary shell shall be driven through a drive mechanism by a variable speed motor. The variable speed drive and motor shall be suitable for starting a fully-loaded rotary shell. Maximum rpm of the cylinder shall be designed not to exceed a resultant tangential velocity of 100 ft/min, with a 10:1 turndown.

Drive mechanism may consist of the pinion gear and shaft running in pillow blocks supplied with roller bearings. All bearings shall conform to applicable ABMA standards. The main pinion shall be made of forged steel and shall be integrated with the pinion shaft. The teeth are to be through hardened (302-352 Bhn). All gearing parameters shall be determined and supplied by the SELLER. The shaft shall be coupled to a gear reducer (Fallk or approved alternate) with a service factor of 1.5. All gear box service factors must be based on motor nameplate horsepower, not operating horsepower. Applicable AGMA standards shall be adhered to. The variable speed motor shall be coupled to the gear reducer through the drive shaft. The gear reducer shall have a second high-speed drive extension to accommodate a second electric motor, backed up with a diesel generator provided by IT. The auxiliary drive is to be used in case of power outage to rotate the dryer at the minimum rpm. In addition, a hand-operated inching mechanism shall be supplied and mounted on the gear reducer low rpm output shaft.

The drive components, the pinion bearing blocks, gear reducer, pinion and spur gear housing support, etc., shall be mounted on a common steel frame. The base frame shall be equipped with adjusting screws for proper alignment of the respective components. The SELLER shall specify the spur/pinion gear lubrication and type of enclosure guard.

Article 2.2 D (continued)

The drive assembly to rotate the cylindrical shell shall be located at the feed end. The SELLER has the option of locating the drive behind the support station toward the discharge end, providing the mechanical design allows for this arrangement. Such an arrangement would shorten the length of the feeder at the feed end. The SELLER also may offer a different drive option such as a hydraulic drive, provided its application is justified (operability, maintenance, life expectancy, etc.).

d. Rotary dryer feed head:
The feed end head shall be of carbon steel plate welded construction. The feed end head shall be aligned with the rotating cylinder. It also shall support the stationary flange for the rotary dryer seal system.

The feed head shall be designed to support and accommodate the dryer feeder provided by IT (through a sealed/flanged connection), the slurry lance (through a sealed/flanged connection) the process off-gas connection, thermocouple connections, on-line humidity probe connections, the visual inspection window, and high pressure wash spray inlet connections. The feed end housing shall be designed to be removable on rail tracks and equipped with locking blocks.

The moisture content and temperature of the process off-gas shall be measured inside the rotary shell at the exit point of the final heating zone. The SELLER shall determine the type of instrumentation required, along with the size and location of flanges required on the feed head. The SELLER shall also specify the expected amount of entrained solids in the process off-gas for the various types of surrogate feed shown in Table B of Article 3.6.

e. Rotary dryer discharge head:
The discharge head shall be of carbon steel welded construction. The discharge housing shall mate with the rotating cylinder through a circular opening. This opening shall be designed to support the stationary part of the rotary dryer seal system.

The moisture content and temperature of the product bed shall be measured inside the rotary shell at the exit point of the final heating zone. The SELLER shall determine the type of instrumentation required, along with the size and location of flanges required on the discharge head. The dried product discharge outlet located at the bottom of the discharge housing shall be designed so that the product from the dryer drops through it vertically by gravity.

Article 2.2 D (continued)

The discharge bottom shall be supplied with a flange to ensure an airtight bolted connection. All flanged connections shall be sized and located by the SELLER.

The dryer discharge head shall have the following openings for flanged connections:

Description	Quantity
Sweep Air	3
On-Line Humidity Probes	TBD
Product outlet	1
Manhole	1
Sight port	1
Thermocouples	TBD
Grab sampler	1

The discharge head shall accommodate the sweep air intake nozzles. The sweep air shall be introduced at three inlet points located in the discharge head. The SELLER shall furnish piping connecting the three sweep air inlet nozzles to an overhead header. Each connecting pipe shall be equipped with a manually adjustable butterfly valve.

f. Rotary dryer seals:
The rotating dryer seals are to be provided at both the feed and the discharge ends to avoid gas leakage into or out of the dryer. The seals shall be recommended by the vendor and approved by IT. The contact section of the seal assembly shall consist of a fixed part connected to the feed end head and the discharge head of the dryer, respectively, and a rotating part connected to the dryer barrel.

A seal ring with spring loading may be considered to compensate for normal seal wear, heat up, and cool down. The seal must have easy access for adjustment and replacement.

A rotating flange shall be supplied with the machined surface. The seal ring shall mate with this surface. Segmented guides and spring-loaded adjustable bolts may be provided. Labyrinth section shall be designed with a minimum of one or more pieces.

The SELLER shall furnish dryer seals of a type that has been proven in the field by at least 3 years of satisfactory service. It is expected that the seal shall include the above features. The seal assembly shall be designed for a normal pressure differential across the seal of 2

Article 2.2 D (continued)

inches W.C. and shall accommodate the longitudinal and radial expansion based on operating conditions. Seals shall also be provided at both ends of the furnaces between the fixed furnace and the rotating shell.

g. Main support frame:
The entire indirect dryer assembly consisting of the two support stations and the drive assemblies, as well as the entire furnace, shall be located and anchored on an integrated structural base frame, designed and supplied by the SELLER. This structure will be located and anchored on the concrete pillars to be provided by IT. The foundation requirements for anchoring the main support frame shall be provided by the SELLER.

2. Furnace:
   a. The rotary dryer shall be supplied with a furnace surrounding the rotary shell. The function of this furnace is to generate high temperature flue gases by combustion of natural gas and/or fuel oil as fuel.

      The furnace shell housing the rotating cylinder shall be designed and constructed to accommodate and support refractory lining. The furnace shall be designed and built in sections (zones) along the length of the dryer. At least 4 zones shall be supplied; additional zones may be supplied at the SELLER'S discretion. Each zone shall be equipped with its own designated set of burners to supply the source of heat required for drying. The SELLER shall specify the thermal duty required for each zone, and shall consider placing baffles between furnace zones for better thermal control. Drying shall be accomplished through indirect heat transfer between the hot gases and the feed, which is fed into the rotating cylinder and advances from the feed end toward the discharge end.

      The furnace shell shall be carbon steel plate welded construction and shall be designed in sections with joining flanges. Each furnace section shall be supplied in halves, the upper and lower parts to be fitted together with joints and secured with bolts and nuts.

      The furnace sections shall be flanged together. The furnace shall be designed with all necessary stiffening and structurally clamped together, as required. IT's reference is a flanged horizontal joint to facilitate maintenance and inspection of the furnace shell. Each section (zone) of the furnace shall be supplied with, but not limited to, the following openings:

Article 2.2 D (continued)

Opening	Quantity/Zone
Burner(s)	TBD
Exit gas nozzle	1
Sight port(s)	TBD

Opening	Quantity/Zone
Instrumentation	
- thermocouples	TBD
- pressure gauge	1
- outer furnace shell surface temperature measuring device	1

The SELLER shall determine furnace outline dimensions, refractory lining (thickness and type), annular spacing between the refractory hot surface and the outside surface of the rotating shell, number of burners and sight ports per zone, and the quantity and location of thermocouples placed inside each zone. These thermocouples shall measure flame, rotary shell, and annular headspace temperatures at various locations. As a minimum, the furnace annular headspace temperature shall be measured in each zone at the first and last burner. A combined furnace off-gas temperature measurement in the off-gas header shall be included. At least one rotary shell temperature measurement per burner shall be required, with the location to be determined by the SELLER.

Physical dimensions and thermal capacity of the furnace shall be determined by the SELLER to meet technical requirements as specified in Article 2.2, Paragraph C, Subparagraphs 1 and 2.

b. Refractories:
The furnace shall be refractory lined to withstand heat. Use of refractory bricks and/or ceramic fiber may be proposed with proper backing insulation to ensure that the temperature will not exceed 125 degrees F on the furnace external metallic surfaces. The SELLER may propose the option of using pre-installed "soft" refractories.

c. Burners:
The burners shall be a high velocity type of dual fuel (gas and fuel oil), low NO_x burner. The burners shall be designed (1) to burn natural gas and/or fuel oil and produce a short flame with high exit velocity; (2) to ensure a low NO_x production; (3) to achieve furnace temperature required to maintain dryer shell temperature below its maximum; and (4) to be capable of operating with a turndown ratio of 10:1. In addition, the burners shall be operable in low and high fire with

ambient air and with electronic direct spark ignition. In burner selection, to achieve a low NO_x concentration in the combustion gases, two-stage combustion may be considered. This burner shall have the capacity to be operated with primary and secondary combustion air supply at 600°F. The burner shall be supplied to accommodate UV flame detectors for flame supervision and be operable with a cross-connected ratio control.

The number of burners per zone and the spacing between burners shall be specified by the SELLER. The SELLER shall select the burners and their thermal duty per zone based on the thermal design requirements specified in Article 2.2 of this specification. The SELLER shall specify the following operational parameters of the selected burner and include data in the bid.

(1) Air capacity (scfm) at 600 degrees F, not firing.
(2) Air capacity (scfm) at 600 degrees F, stoichiometric.
(3) Pressure differential (in. of water), air orifice.
(4) Burner tile pressure drop.
(5) Maximum percent excess air.
(6) Maximum percent excess fuel.
(7) Flame length, stoichiometric.
(8) Flame diameter, stoichiometric.
(9) Ignition (scfm at psig) natural gas, maximum.
(10) Ignition (scfm at psig) natural gas, minimum.
(11) Air/Fuel ratio at ignition, maximum.

3. Burner piping and instrumentation skid:
The SELLER shall provide all necessary equipment and instrumentation for each set of burners provided independently for each zone of the furnace (fuel and air headers, interconnecting pipes, fittings, valves, control and safety valves fittings and support) on an integrated skid. For general piping requirements, see piping specifications, Sections 15050, 15080, and 15250.

Components to be installed on the skid shall include, but are not limited to, the following:

a. Gas supply header with independent manifold for each set of burners per zone. The manifold shall include burner management as required by NFPA standards, ratio control of gas and combustion air, interconnecting piping, automatic vent valve, and proof-of-closure switch.
b. Fuel oil supply header with independent manifold for each set of burners per zone. The manifold shall include burner management as required by NFPA standards, ratio control of fuel oil and combustion air, interconnecting piping, and proof of closure switch.

Article 2.2 D (continued)

c. The main air supply header shall be supplied with flow control valves to each zone of the burners. The main air supply header shall include local thermometer, thermocouple nozzle, and pressure nozzle. Thermocouple and pressure transmitters shall be supplied, as specified in Article 2.2, Paragraph E. The main air supply header shall include insulation to provide a maximum external temperature of 125°F at ambient operating conditions.

d. The piping and valving for each individual burner shall include the interconnecting piping (burner gas and fuel oil supply) with manual shutoff valves for gas and fuel oil, and fuel oil and gas regulation and metering to be specified by the SELLER. Each burner shall include pilot tips, atomizing air connections, flame detectors, and interconnecting piping to be specified by the SELLER.

e. Atomizing air supply header with manual shutoff valves for each burner. The supply of atomizing air will be by IT.

Installed instruments, valves, etc., shall be located on the skid to allow easy access for maintenance and replacement. Interconnecting piping within the skid and between the skid and the burners as well as the air supply piping to the combustion air header and atomizing air header, located on the skid, shall be supplied by the SELLER. The fuel supply (natural gas and fuel oil) to the main gas header and main fuel oil header located on the skid will be provided by IT.

The skid shall be designed to have a structural frame for support and routing of valves, pipes, manifolds, etc., and base plate to anchor skid. Any support structure for the skid needed by arrangement shall be supplied by the SELLER. The concrete slab (foundation) will be provided by IT.

4. Combustion-air supply fan:
The duty of the combustion air supply fan is to provide combustion air directly to all sets of burners installed in parallel, for each zone of the dryer furnace. Intake air to the fan will be from the recuperator at a 600°F design temperature. The combustion air fan shall be sized by the Seller to:

a. Have adequate pressure in the air header located on the burner piping and instrumentation skid to provide the required air pressure (identical) for each burner per zone.

b. Supply all of the combustion air (including required excess air) at burner rated capacity and over the range of 10:1 operational turn-down ratio.

c. The fan static pressure rating shall be determined by the SELLER. Total static head shall be calculated based on pressure drop requirements including the line, fitting and valve losses, pressure drop across equipment, and burner air inlet pressure requirements.

Article 2.2 D (continued)

d. The fan shall be designed to deliver 15 percent excess volume against a 30 percent static pressure overload.

e. The fan shall be supplied with a variable speed motor with controls to accommodate operation as defined by turndown ratio above. The proper means of adjoining the fan and system characteristics must be provided.

f. The fan shall be a single-inlet, single width, non-overloading centrifugal type. The bearings shall be grease lubricated, ball or roller type, and shall take all radial and end thrust. The fan shall be furnished as a complete unit, including motor, guard, and mounting base. The fan shall conform to AMCA 99 and AMCA 210. The foundation will be supplied by IT per SELLER's requirements.

g. The fan shall be supplied with a replaceable filter to remove particulate of a size of 6 microns or greater to protect the burner system. The filter shall be capable of operating at the maximum combustion gas temperature.

5. Recuperative Heater:

The duty of the recuperative heater is to recover heat from furnace off-gas to preheat both combustion air and sweep air. The heater shall be a counterflow air to air heat exchanger. It shall provide heated air at a 600 degree Fahrenheit temperature at the maximum flow of combustion air and sweep air (both flows to be determined by the Seller). The recuperative heater shall be constructed of materials that can withstand the maximum furnace off-gas temperature at a shell operating temperature of 1600 degrees Fahrenheit. The Seller shall determine the materials of construction to be used and specify them in their bid. The SELLER shall also determine the design pressure drops of the recuperative heater and specify them in their bid.

The recuperative heater shall be supplied with controls to maintain the sweep gas and combustion air temperature to prevent temperatures that exceed the design requirements for the burners, duct work, or other downstream equipment. Temperature control may be accomplished using bypass ducts and dampers on the furnace off gas, the ambient air supply, or both or other means of temperature control as proposed by the Seller. The Seller shall specify the means of temperature control proposed in their bid package.

The Seller shall determine the recuperative heater outline dimensions, refractory lining of inlet duct work (if required), and the quantity and location of any thermocouples required in the unit. At a minimum, the heated air temperature shall be measured at the exit from the recuperative heater. The physical dimensions and thermal capacity of the recuperative

Article 2.2 D (continued)

heater shall be determined by the Seller to meet technical requirements as specified in Article 2.2, Paragraph C, Subparagraph 1 and 2.

The duct work from the furnace to the recuperative heater, from the recuperative heater to the burners, and from the recuperative heater to the furnace induced draft fan shall be supplied with insulation to conserve heat and reduce the outside temperature of the duct work. The insulation shall be sufficient to provide a maximum outside temperature of the duct work of 125 degrees Fahrenheit at the maximum design temperature inside the duct and the summer temperature outside the duct [See Article 2.2 Paragraph C, Subparagraph 2(a)]. All supports required for interconnecting duct work shall be supplied by the Seller. All duct work should be supported by attachment to the equipment being serviced by that duct work; if additional free standing supports are required, the Seller shall specify these in their proposal. In this case, the concrete slab (foundation) will be provided by IT.

The recuperative heater shall be designed to have a structural frame and/or baseplate to anchor the unit. Any support structure or baseplate required by the arrangement shall be supplied by the Seller. The concrete slab (foundation) will be supplied by IT.

6. Air Supply Fan:
The duty of the air supply fan is to provide ambient air to the recuperative heater. This fan supplies the motive force to move air through the recuperative heater, transport heated sweep air to the dryer, and transport heated combustion air to the combustion air fan. Intake air to the fan will be from ambient. The air supply fan shall be sized by the Seller to:

   a. Have adequate pressure for the pressure drop through the recuperative heater, sweep air flow control damper, and duct work to the dryer to transport the sweep air. This pressure should also be adequate to supply heated air to the combustion air fan.
   b. Supply all of the sweep air and all of the combustion air (including required excess air) at burner rated capacity and over the range of 10:1 operational turndown ratio.
   c. The fan static pressure rating shall be determined by the Seller. Total static head shall be calculated based on pressure drop requirements including the line, fitting and valve losses, pressure drop across equipment, and dryer sweep air inlet pressure requirements.
   d. The fan shall be designed to deliver 15 percent excess volume against a 30 percent static pressure overload.

Article 2.2 D (continued)

e. The fan shall be supplied with a motor. Either a variable speed or constant speed motor may be proposed, at the discretion of the Seller. Flow control of combustion air shall be accomplished by the combustion air fan, as described above. Flow control of sweep air shall be by a variable speed drive on the air supply fan motor or by a damper on the duct work that transfers heated sweep air to the dryer (TBD the SELLER).

f. The fan shall be a single-inlet, single width, non-overloading centrifugal type. The bearings shall be grease lubricated, ball or roller type, and shall take all radial and end thrust. The fan shall be furnished as a complete unit, including motor, guard, and mounting base. The fan shall conform to AMCA 99 and AMCA 210. The foundation will be supplied by IT per the Seller's requirements.

7. Furnace Induced Draft Fan:
The duty of the furnace induced draft fan is to draw furnace off-gas through the recuperative heater and out of the stack. This fan supplies the motive force to move furnace off-gas through the recuperative heater, transport partially cooled off-gas to the spray quench, and discharge cooled furnace gas out of the stack. Intake air to the fan will be from a spray quench located between the recuperative heater and the fan. The furnace induced draft fan shall be sized by the Seller to:

a. Have adequate pressure for the pressure drop through the recuperative heater, spray quench, duct work, and stack.

b. Exhaust all of the furnace off-gas generated at burner rated capacity and over the range of 10:1 operational turndown ratio.

c. The fan static pressure rating shall be determined by the Seller. Total static head shall be calculated based on pressure drop requirements including the line, fitting and valve losses, pressure drop across equipment, and furnace negative pressure requirements.

d. The fan shall be designed to deliver 15 percent excess volume against a 30 percent static pressure overload.

e. The fan shall be supplied with a variable speed motor with controls to accommodate operation as defined by the turndown ratio above. The proper means of adjoining the fan and system characteristics must be provided.

f. The fan shall be a single-inlet, single width, non-overloading centrifugal type. The bearings shall be grease lubricated, ball or roller type, and shall take all radial and end thrust. The fan shall be furnished as a complete unit, including motor, guard, and mounting base. The fan shall conform to AMCA 99 and AMCA 210. The foundation will be supplied by IT per the Seller's requirements.

Article 2.2 D (continued)

8. Spray Quench:
A spray quench section shall be supplied by the Seller in the duct work between the recuperative heater and the furnace induced draft fan. The spray quench will use process water to cool recuperative heater off-gas to below 600 degrees Fahrenheit. The spray quench shall be constructed of materials that are designed to withstand the maximum temperatures of recuperative heater off-gas, as specified by the Seller.

The Seller shall determine the spray quench outline dimensions, refractory lining of inlet duct work (if required), and the quantity and location of any thermocouples required in the unit. At a minimum, the cooled air temperature shall be measured at the exit from the spray quench. The physical dimensions and water flow of the spray quench shall be determined by the Seller to meet technical requirements as specified in Article 2.2, Paragraph C, Subparagraph 1 and 2.

The duct work from the recuperative heater to the spray quench, from the spray quench to the induced draft fan, and from the induced draft fan to the stack shall be supplied with insulation to conserve heat and reduce the outside temperature of the duct work. The insulation shall be sufficient to provide a maximum outside temperature of the duct work of 125 degrees Fahrenheit at the maximum design temperature inside the duct and the summer temperature outside the duct [See Article 2.2 Paragraph C, Subparagraph 2(a)]. All supports required for interconnecting duct work shall be supplied by the Seller. All duct work should be supported by attachment to the equipment being serviced by that duct work; if additional free standing supports are required, the Seller shall specify these in their proposal. In this case, the concrete slab (foundation) will be provided by IT.

The spray quench shall be designed to have a structural frame and/or baseplate to anchor the unit. Any support structure or baseplate required by the arrangement shall be supplied by the Seller. The concrete slab (foundation) will be supplied by IT.

9. Furnace Stack:
A furnace stack shall be supplied by the Seller to exhaust the cooled furnace off-gas to the atmosphere. The furnace stack shall have a minimum height of 60 feet. The stack diameter is to be defined by the Seller based on the estimated stack gas flow.

The stack shall be supplied with insulation to conserve heat and reduce its outside temperature. The insulation shall be sufficient to provide a maximum outside temperature of 125 degrees Fahrenheit at the maximum

Article 2.2 E (continued)

design temperature inside the stack and the summer temperature outside the stack [See Article 2.2 Paragraph C, Subparagraph 2(a)]. All supports required for interconnecting duct work to the stack shall be supplied by the Seller.

The stack shall be designed to have a structural frame and/or baseplate to anchor the unit. Any support structure or baseplate required by the arrangement shall be supplied by the Seller. The concrete slab (foundation) will be supplied by IT.

10. Arrangement requirements:
The location of the dryer and all equipment supplied by the SELLER (Article 2.1, Paragraph B) shall be clearly indicated on a general arrangement drawing. All walkways, platforms, stairs, and support structures associated with the equipment shall be included. The major dimensions for major items and equipment assemblies shall be provided to give locations in both plan view and elevation. Preliminary arrangement drawings shall be part of the bid package described in Article 1.3, Paragraph B. The location of the dryer shall be subject to the following requirements:

a. The length of the rotating cylinder not covered by the furnace shall be determined by the SELLER according to the following requirements:
   1) At the feed end, accommodate one support station and the drive mechanism.
   2) At the discharge end, accommodate one support station.
b. At the discharge end, the elevation shall be set to provide a minimum 5-foot clearance between the floor and the discharge point of the discharge head. The elevation at the feed end shall be determined by the required slope.
c. The entire assembly shall be supported on concrete pillars (provided by IT) as required and specified by the SELLER.

E. Control and Instrumentation Requirements:
1. Specific requirements:
   a. The instrumentation and control philosophy of the operation of the indirect dryer system shall be determined and supplied by the SELLER. The SELLER shall also specify and furnish the instrumentation, sensors, and controls for the equipment. The indirect dryer will be monitored and controlled remotely from a control room provided by IT.

Article 2.2 E (continued)

Each furnace zone shall be set up to have its own temperature control, independent of the other zones. Each set of burners per zone shall be automatically or remotely controllable as a set for rough control. In addition, each burner shall then be manually adjustable by the operator for fine-tune control as required. Temperature control for each set of burners shall be measured and averaged out to determine shell temperature at each burner. This average will be signaled to the controller and compared to a predetermined, set temperature band. In case any shell temperature measurement of the calculated average is out of this range, an alarm will sound for operator action.

The SELLER shall configure burner management to preferably utilize natural gas as the fuel, up to its 50 mm Btu/hr availability, during normal operation. Additional fuel requirements shall be supplied by fuel oil.

The burners shall also be capable of operating at full capacity using fuel oil alone for periods of up to one week at a time. This shall be designed as an alternative operating mode that may be selected by the operator as necessary.

The dryer system shall be furnished with a separate control console (panel) for local monitoring and operation. The panel will be wired to the dryer monitoring and control instruments via an interconnection cabinet/enclosure. The interconnection cabinet/enclosure shall be positioned on the dryer for ease of installation of conductors from the panel. Wiring connection points shall be clearly identified for point-to-point wiring at the job site.

Interconnection wiring will be supplied and installed by IT. It shall be the responsibility of the SELLER to provide interconnection diagrams to connect the dryer to the panel.

In addition, certain operating parameters will be of interest as inputs to a data acquisition system provided by IT. The SELLER shall make these parameters of interest available for input to the data acquisition system. A listing of parameters of interest will be provided by the SELLER as part of the package submittal after award.

The indirect dryer control system shall perform, but not be limited to, the following functions:

Article 2.2 E (continued)

1) Supervise burner ignition: Prior to warm-up, initiation of control logic shall verify that the following limits are satisfied:
   a) Furnace temperatures are within operating limits.
   b) Furnace pressure is within operating limits
   c) Combustion air supply fan is operating.
   d) Furnace induced draft fan is operating.
   e) Process induced draft fan is operating.
   f) Natural gas pressure is adequate.
   g) Dryer is rotating.
   h) Atomizing air pressure is adequate.
   i) Fuel oil pressure is adequate.
2) Once operating, the following limits will shut down the burners:
   a) Furnace temperature is out of limits.
   b) Furnace pressure is out of limits.
   c) Combustion air flow is inadequate.
   d) Fuel (natural gas and/or fuel oil)flow is inadequate.
   e) Dryer is not rotating.
   f) Rotary shell temperature exceeds high limit.
   g) Combustion air temperature exceeds maximum limit.

   A flame safeguard programming control system (Honeywell Model R4140L or approved equal) shall be provided to control each burner light off sequence. The supervised burner ignition system shall follow the start-up sequence as outlined by the SELLER in accordance with NFPA standards.
3) Control burners: Burners/zone shall be controlled (capable of 10:1 turndown ratio) to maintain selected shell temperature. Shell temperature shall be set by the operator.
4) Measure, control, and display inside furnace temperatures and the temperature of the outer surface of the rotating cylinder in each zone.
5) Measure, control, and display furnace exit gas temperature for each zone.
6) Measure, control, and display temperature, pressure and flow of combustion air.
7) For fuel/air ratio control of all sets of burners/zone and each individual burner within each zone, a pressure-balanced regulator control system is acceptable. The SELLER may quote, as an alternative, a fully metered electronic fuel/air ratio control for each set of burners per zone integrated with a programmable microprocessor.
8) Measure, control, and display furnace exit gas pressure.

Article 2.2 E (continued)

9) Measure dryer process off-gas temperature and pressure.
10) Measure dryer product temperature at the exit of the final dryer zone.
11) Measure natural gas pressure and flow
12) Measure fuel oil pressure and flow
13) Measure atomizing air pressure, temperature, and flow.

b. The instrumentation and control philosophy of the operation of the heated air supply system shall be determined and supplied by the Seller. The heated air supply system will include the recuperative heater and the air supply fan. The Seller shall also specify and furnish the instrumentation, sensors, and controls for the equipment. The heated air supply system will be monitored and controlled remotely from a control room provided by IT.

The air supply fan shall be configured to control the pressure and flow of heated air as sweep air to the indirect dryer. This pressure and flow shall also be adequate to supply the combustion air fan. The air supply fan shall be configured to maintain a constant sweep air pressure at the recuperative heater exit while responding to the variable demands for heated air by the combustion air fan. The pressure setpoint shall be established in the controller based upon the sweep air flow rate. The sweep air flow rate shall be measured in the duct exiting the dryer.

The recuperative heater shall be configured to control the temperature of heated combustion air and sweep air to within minimum and maximum limits. The minimum limit for this temperature shall be 600 degrees Fahrenheit. The maximum limit of this temperature shall be established by the Seller based on the requirements for burners, duct work, and other equipment proposed. The temperature shall be automatically or remotely controllable.

Local monitoring and operation of the heated air supply system shall be accomplished using the local panel supplied with the indirect dryer [see Article 2.2, Paragraph E, Subparagraph 1(a)]. The panel will be wired to the heated air supply system monitoring and control instruments via an interconnection cabinet/enclosure. The interconnection cabinet/enclosure shall be positioned on the recuperative heater for ease of installation of conductors from the panel. Wiring connection points shall be identified for point-to-point wiring at the job site.

Article 2.2 E (continued)

Interconnection wiring will be supplied and installed by IT. It shall be the responsibility of the Seller to provide interconnection diagrams to connect the heated air supply system to the panel.

In addition, certain operating parameters will be of interest as inputs to a data acquisition system provided by IT. The Seller shall make these parameters of interest available for input to the data acquisition system. At a minimum, these parameters shall include heated gas temperature, recuperative heater supply temperature, recuperative heater off-gas temperature, sweep air pressure, and sweep air flow rate. A listing of parameters of interest will be provided by the Seller as part of the package submittal after award.

c. The instrumentation and control philosophy of the operation of the furnace combustion exhaust system shall be determined and supplied by the Seller. The furnace combustion gas exhaust system will include the spray quench, furnace induced draft fan, and stack. The Seller shall also specify and furnish the instrumentation, sensors, and controls for the equipment. The furnace combustion gas exhaust system will be monitored and controlled remotely from a control room provided by IT.

The furnace combustion gas exhaust system shall be configured to control the pressure, flow and temperature of the furnace exhaust gas. The pressure in the furnace shall be controlled to meet the requirements for operation of the indirect dryer. The maximum limit for the combustion gas exhaust temperature (out of the stack) shall be 600 degrees Fahrenheit. The minimum limit of this temperature shall be established by the Seller based on reducing condensation in the blower, duct work, stack, and other equipment proposed. The temperature shall be automatically or remotely controllable. Local monitoring and operation shall be accomplished using the local panel supplied with the indirect dryer [see Article 2.2, Paragraph E, Subparagraph 1(a)]. The panel will be wired to the furnace combustion gas exhaust monitoring and control instruments via an interconnection cabinet/enclosure. The interconnection cabinet/enclosure shall be positioned on the furnace induced draft fan skid for ease of installation of conductors from the panel. Wiring connection points shall be identified for point-to-point wiring at the job site.

Interconnection wiring will be supplied and installed by IT. It shall be the responsibility of the Seller to provide interconnection

Article 2.2 E (continued)

diagrams to connect the furnace combustion gas exhaust system to the panel.

In addition, certain operating parameters will be of interest as inputs to a data acquisition system provided by IT. The Seller shall make these parameters of interest available for input to the data acquisition system. At a minimum, these parameters shall include the stack gas temperature and flow. A listing of parameters of interest will be provided by the Seller as part of the package submittal after award.

2. General Requirements:
   a. Locally mounted transmitters shall be two-wire, loop powered configuration, with 4 to 20 mAdc output signal. Accuracy ± 1.5 percent of full scale.
   b. Remote instruments used to provide operator information shall be equipped with digital readouts, 3-1/2 digits minimum.
   c. Direct reading instruments (i.e., pressure gauges, thermometers, etc.) shall be analog display, 4-1/2-inch dial, black letters on white background, phenolic case and polycarbonate lens. Accuracy ± 5 percent of full scale.
   d. Temperature sensors shall be thermocouples selected based on the estimated operating/process temperature to be measured. All thermocouples shall be installed with protecting wells, unless the intended use is the monitoring of surface temperatures.
   e. Materials of construction shall be chosen to provide the optimum resistance to corrosion and wear, while maintaining economic value for the duration of the project.

3. Installation Requirements:
   a. Process sensing instrumentation shall be directly installed on the equipment or the equipment's ductwork whenever conditions permit. Remote installation of field instruments is acceptable to avoid environmental limitations as specified by the instrument manufacturer.
   b. Differential pressure transmitters and switches may, at the option of the installer, be installed remotely from the equipment utilizing instrument stands and racks, as well as stainless steel impulse lines between the process and the transducer/transmitter.
   c. Horizontal runs of instrument impulse lines shall be sloped at 1/4 inch per foot. Installations sensing liquids and condensing gases and vapors shall have impulse lines sloping down to the instrument. All other installations shall have lines sloping up to the instrument.
   d. Instruments directly connected to the process by impulse lines shall be installed with process isolation valves to facilitate maintenance

Article 2.2 E (continued)

and calibration of the instruments without shutdown of the dryer or its support equipment and utilities.

e. All instruments and sensors will have affixed a permanent stainless steel tag with the vendor's identification number (loop number) engraved in 1/8-inch-high letters (minimum). The tag may be affixed to the instrument by adhesive, screws, or stainless steel wire.

f. Sight ports shall be installed on the sidewall of the indirect dryer system to observe burner operation. The SELLER shall design and recommend the sight port dimensions, type of mounting, heat resistant glass suitable for the operating temperature, type of stainless steel shutter, and type of purging.

4. Operator Controls:

a. Information and data for the operation of the dryer and associated equipment will be displayed on a local control panel, along with manual controls to start and stop the dryer. Controls and displays may be supplied as part of the control software or as discrete components wired to more conventional control/indicating devices.

b. The operator control station will be NEMA 4 rating. This will allow the control station to be located outside in a potentially damp area.

c. All instruments and controls will be positioned such that viewing, operation, calibration, and maintenance functions may be performed without physically dismantling the instruments and controls.

5. Codes and Standards:
SELLER shall comply with the applicable codes and standards.

F. Electrical Requirements:

1. See electronic sections in Divisions 15 and 16.

G. Structural Requirements:

1. The rotary dryer and associated equipment support stations will be supported and anchored on concrete foundations (provided by IT), which are capable of resisting all vertical and unbalanced horizontal loads and forces emanating from the equipment. The SELLER shall be responsible for providing information concerning the location, magnitude, and direction of all equipment forces with verifiable calculations stamped by a professional engineer licensed in the State of Ohio. This information shall be furnished with the general arrangement design drawing submittals.
2. Information shall be provided indicating the expected amount (in inches) and direction of thermal expansion for all specified equipment, including proposed location of expansion joints, expansion devices, support lugs, lateral guides, or spring mounts where needed.
3. Equipment/structural design shall provide for loads as specified below:

Article 2.2 G (continued)

a. Roof, live load: 20 psf.
b. Platforms and walkways, live load: 75 psf.
c. Wind load: Velocity pressure shall be calculated using equation 3 of ASCE 7-93, using V = 80 mph basic wind speed and I = 1.15. Design wind pressures and forces shall be in accordance with ASCE 7-93, Table 4.
d. Seismic load: Use provisions of the Uniform Building Code, using Seismic Zone 1 and Importance Factor 1.25. W (total seismic load) shall include all normal operating contents, piping, and attachments.
e. Shop drawings shall state the vertical loads and lateral forces used (wind and seismic) in the design.

4. Materials of construction shall meet the following requirements:
   a. Carbon and Structural Steel: ASTM A36.
   b. Structural Tubing: ASTM A500, Grade B.
   c. Bolts, Nuts, and Washers: ASTM A325
   d. Anchor Bolts: ASTM A36; Washer : F436; Nuts: A563.
   e. Welding Materials: AWS D1.1.
5. Welding requirements are specified in Section 13200.
6. Finish and painting requirements are specified in Section 09900.
7. Additional Codes and Standards:
   SELLER shall also comply with the applicable AISC and ANSI codes and standards.

H. Design Interfaces:
This section identifies the interface, interaction, or interconnection points expected for the indirect rotary dryer system. Additional interfaces required by the SELLER's design must be clearly identified within the SELLER's proposal.

1. Mechanical interfaces:
   Mechanical interfaces required within the indirect dryer system shall be provided in accordance with the requirements of this specification.
   a. Air supply fan, inlet flange.
   b. Gas supply line header on the burner pipe skid, inlet flange.
   c. Combustion gas stack.
   d. Feed end head, dryer feeder, inlet flange.
   e. Discharge head, product discharge flange.
   f. Discharge head, process off-gas discharge flange.
   g. Feed end head, high-pressure water inlets, quick-connect couplings.
   h. Fuel oil supply line header on the burner pipe skid, inlet flange.
   i. Cooling water supply line inlet flange.
   j. Process air supply line, inlet flange.

2. Structural Interfaces:
   The indirect dryer assembly and its supporting base frame shall be supplied by the SELLER. To support this assembly, reinforced concrete

Article 2.2 (continued)

foundations and pillars will be supplied by IT. Structural support for platforms, equipment, piping, etc., included in the system shall also be supplied by the SELLER. The SELLER shall supply drawings indicating the dimensions and location of mounting requirements as well as structural loads, vibrational loads, and deflections that will be used by IT to design and specify the support foundation.

a. Indirect rotary dryer system, main support frame with anchor bolts.
b. Burner piping and instrumentation skid, support structure with anchor bolts.
c. Combustion-air supply fan, base frame with anchor bolts.
d. Recuperative heater, support structure with anchor bolts
e. Air supply fan, base frame with anchor bolts.
f. Furnace induced draft fan, base frame with anchor bolts.
g. Spray quench, support structure with anchor bolts.
h. Furnace stack, support structure with anchor bolts
i. Maintenance platforms, walkways and structures; with anchor bolts.
j. Feed and discharge ends, support structures with anchor bolts.

3. Ventilation
The indirect rotary dryer shall operate at a minimum vacuum of -0.5 inches W.C. relative to atmosphere at the feed end. The draft will be supplied by the process off-gas system to be supplied by IT. The SELLER shall specify pressure drop across the dryer system and associated equipment.

4. Electrical Interfaces:
Interfaces between IT and SELLER responsibilities are delineated in the electrical Division 16.

5. Instrumentation and Controls:
All instrumentation sensors mounted on the indirect dryer system and associated equipment are the responsibility of the SELLER. Refer to Section 16900, Instrumentation and Control.

2.3 MATERIALS OF CONSTRUCTION

All materials shall be new and, unless otherwise specified in this specification, shall be in accordance with the following:

A. Carbon and Structural Steel: ASTM A36.

B. Carbon and Alloy Steel Bars: ASTM A29.

C. Copper Wire: ASTM B3.

Article 2.3 (continued)

D. Precipitation Hardened Steel: ASTM A564, UNS S17400, Type 630, or as recommended by SELLER and approved by IT.

E. Threaded Fasteners: ASTM A307, Carbon Steel.

F. Controls and Instrumentation: Per Article 2.2 and Section 16900.

G. Electrical: Per Divisions 15 and 16.

H. Structural: Per Article 2.2, Paragraph G.

I. Piping: Per Sections 15050, 15080, and 15250.

J. Other materials: As recommended and specified by SELLER.

2.4 FABRICATION REQUIREMENTS

A. General:
The indirect dryer system shall be fabricated with materials, welding processes, and refractory fabrication techniques listed herein, and machined and assembled to conform with approved SELLER drawings.

B. Welding:
Prior to fabrication, welding procedures and welder qualifications shall be submitted to IT for approval. Welding procedures for the dryer rotating cylinder (shell) shall be qualified to conform with the requirements of ASME BPUC.

1. Welder Qualification:
Within the previous 12 months, welders and welding operators shall be qualified to the actual procedures used in fabrication. For carbon steel, welders shall be qualified per AWS.

2. Fabrication:
The edges and surfaces of the parts to be welded may be cut to shape and size by mechanical means such as machining, shearing, or grinding, or by oxygen or arc cutting. After oxygen or arc cutting, all slag and molten material shall be removed by mechanically grinding the edge back a minimum of 1/16 inch of parent material before welding. All groove welds shall have complete penetration and all welds shall have complete fusion with the base metal.

3. Equipment and Tools:

Article 3.1 B (continued)

All tools and equipment used on carbon steel shall be free of contamination and foreign matter that would be detrimental to fabrication. Wire brush material shall be compatible with the base metal. Grinding wheels shall be resin bonded.

4. Filler Metal:
Filler metals for structural steel shall conform to applicable AWS codes. Filler metals for alloy steel shall be specified in accordance with the steel alloy manufacturer's instructions.

Controlled storage and handling of electrodes, fluxes, and other welding materials shall be maintained. Coated electrodes that have been open or unheated in excess of 8 hours shall be used only if they are oven heated in accordance with electrode manufacturer's recommendations. The heat and time shall be maintained and recorded by a recording instrument.

C. Refractories:
The refractories shall be installed at the site. The SELLER may utilize a subcontractor for refractory installation, but must retain responsibility. The SELLER shall provide a refractory design and installation plan for IT review and approval. The SELLER may propose the option of using pre-installed, "soft" refractories.

PART 3 EXECUTION

3.1 TESTING AND INSPECTION

A. General:
The SELLER's quality control department shall be responsible for ensuring that the equipment components and accessories are shop inspected during fabrication and sub-assemblies functionally tested prior to shipment to prove compliance with the requirements of this specification. Inspection and test reports shall be submitted to IT.

B. Integrated Plan:
The SELLER shall submit and maintain a detailed plan with schedule for manufacturing, inspection, and testing. The plan shall be submitted to IT for approval prior to fabrication. IT reserves the right to designate "source inspection hold points" which shall be incorporated into the plan at no cost. The hold points shall define the specific operations in the fabrication or inspection sequence that are to be witnessed by IT or their authorized representatives.

Article 3.1 (continued)

C. Witnessing and Notification:
IT reserves the right to witness the shop inspection and tests and, therefore, shall have access to the SELLER's facilities during fabrication, inspection, and testing of equipment or components. The SELLER shall notify IT at least 7 calendar days prior to dates on which inspection or tests at the SELLER's plant, or at the site during installation, are to be performed to maintain the SELLER's manufacturing or shipping schedule.

D. Proposed Procedures:
The SELLER shall submit proposed inspection and acceptance test procedures to IT for approval.

E. Weld Inspection:
Weld inspection procedures and Non-destructive Examination (NDE) welding inspector qualifications shall be submitted to IT for approval.

1. Steel and Alloys:
All NDE shall be per Section 13200 for Vessels and Section 15050 for Piping and Accessories. All welds shall be 100 percent visual inspected. Ten percent of each welder's welds shall be radiographed for the full length. All shell weld intersections shall be radiographed to clearly show at least 2 inches each side of the intersection. Inspection reports shall be traceable to each weld joint.
2. Dryer rotating cylinder (shell):
The SELLER shall ensure that the methods of inspection meet the steel suppliers' special instructions given for welding on components that will be subjected to cyclic temperature conditions. All NDE shall be performed in accordance with the requirements of Section 13200. All welds shall be 100 percent visual inspected.
3. NDE Welding Inspector Qualifications:
The NDE inspectors shall be qualified to actual NDE procedures used in accordance with applicable codes.

F. Weld Repair Procedures:
All weld defects shall be repaired in accordance with repair procedures submitted by SELLER and approved by IT prior to use. The welds shall then be rewelded and the repaired welds shall be completely retested in conformance with the approved testing method.

G. Tolerances:
Cylindrical tolerances and metal fits shall be in accordance with ASTM B4.1. The mating parts described with a class of fit shall be machined to the limits specified therein.

Article 3 (continued)

3.2 EQUIPMENT IDENTIFICATION

Equipment shall be identified with a 16-gage stainless steel tag measuring not less than 2 inches by 4 inches, stamped with the equipment tag number. Letters and numbers shall be a minimum of 1/4-inch high for readability. The tag shall be prominently displayed and shall be permanently affixed to the equipment. The equipment numbers shall be indicated on the equipment list to be developed by the SELLER.

3.3 FINISH AND PAINTING

A. SELLER shall furnish with the bid all information, procedures, and requirements with regard to painting and special coatings of the equipment included in this specification. Work shall include surface preparation, primer, and special coat applied in the shop, and field touch-up of shop-applied primer. The SELLER shall specify a minimum dry film thickness per coat according to applicable standards. The SELLER shall also specify different colors for each top coat. SELLER shall refer to Section 09900 - Painting for minimum requirements.

B. Before commencing work, SELLER shall select the proper coating for the anticipated surface temperatures and shall submit to IT for approval a complete list of special coating materials to be used. SELLER shall also submit printed manufacturer's data and recommendations of the special coatings relating to the requirements of surface preparation, thinning, mixing, handling application, and storage of material.

C. Unless otherwise specified by the SELLER, the following surfaces shall be excluded from receiving special coatings:
   1. Stainless steel.
   2. Glass.
   3. Exposed carbon steel and alloys subject to wear, flexure, or close fits (e.g., wheel treads, wheel track, cams, bearings, bearing shafts and housings, retaining rings and grooves, cylinder rods, chains, sprockets, pins, gears, pulley grooves, screw threads, springs, etc.)

3.4 PRODUCT DELIVERY AND ACCEPTANCE

A. Packaging:
   1. Preparation for Packaging:
      All materials shall be cleaned to remove all chips, slag, weld spatter, and all visible oil and grease prior to shipment. After completion of equipment preparation and inspection at the SELLER's site, the SELLER shall ensure secure packaging to prevent shifting and damage during transport.

Article 3.4 (continued)

2. Packaging:
Boxes, crates, and packages containing the equipment shall be clearly labeled with the name of the equipment, tag number, weight, pick-up points, and any other information required to properly identify and safely handle the items during shipping and storage. The components shall be packaged and protected to prevent corrosion, entrance of foreign matter, damage, and loss during shipment. All openings (including the rotary shell) shall be covered, capped, or plugged to prevent ingress of foreign material during shipment and storage. Exposed screw threads shall be protected with plastic caps or plugs. Vapor phase inhibitors (VPI paper) shall be used in boxes or crates. The vapor phase inhibitors shall not be used internal to the equipment. All shipments shall be accomplished with an itemized packing list attached to each shipping container.

B. SELLER's Instructions:
The SELLER shall submit to IT for approval procedures for cleaning, handling, inspecting, repackaging, and storing the components at IT's site before installation. Packages may be stored temporarily indoors or outdoors at -30 degrees F to 120 degrees F and at any degree of relative humidity.

C. Receiving Inspection:
IT will receive and inspect packages containing the indirect dryer system components to verify the contents and to check for possible damage during shipment.

D. Handling and Storage:
IT will be responsible for safe handling and storage of the indirect dryer components (assemblies) in accordance with the supplier's instructions. Multiples shall be stored together in a group lot.

3.5 ERECTION AND INSTALLATION

The indirect dryer system, with the exception of the refractories, shall be installed by IT in the plant area designated for the dryer system. The overall site plan will be prepared to meet the SELLER's design requirements. All the foundations and building footings for the facility will be in place at the time of the indirect dryer installation.

A. The indirect dryer system installation shall be in accordance with the following:
1. All components of the indirect dryer system shall be assembled under the responsibility of the SELLER at the site in accordance with the schedule and the performance plan included with the terms and conditions.
2. IT shall be responsible for all transport, cranes, and equipment for installation and erection of the dryer system.

Article 3.6 (continued)

3. IT is responsible for coordinating the erection and installation to correspond with other facility construction and to notify the SELLER 30 days in advance of scheduled indirect dryer installation.
4. IT is responsible for structural concrete supports and coordination with the SELLER for the interfaces before and during erection.
5. The SELLER shall be responsible for the installation of all refractories and proper refractory curing.

3.6 FINAL ACCEPTANCE METHODS

A. Preconditions:

Final acceptance of the installed drying equipment shall be determined by subjecting it to an acceptance test. The acceptance test is to take place after the following preconditions are satisfied:

1. All inspections and mechanical/functional tests shall have been completed per specified requirements (Article 3.1).
2. A system operational readiness check shall have been performed, and it has been determined that the system is ready for start-up. All safety features shall be functional.
3. The dryer surrogate feeds shall be prepared by IT using the formulas in Tables A and B. Feed for the acceptance test shall be made up of the following weight parameters of the surrogate:

Feed	wt%
Surrogate 1	30
Surrogate 2	30
Surrogate 3	20
Surrogate 4	20

Moisture content in feed and the product as well as the required evaporation rate shall be in accordance with the requirements specified in Table C.

4. Adequate utility supplies (electric, air, fuel) are available.
5. The off-gas handling system shall be ready to maintain the proper pressure (vacuum) in the dryer.
6. The Acceptance Test Plan and Acceptance Test Procedures have been prepared and agreed to by the SELLER and approved by IT.

Article 3.6 (continued)

Table A - Specification of Basic Surrogate Materials
(Dry Weights)

Basic Surrogate Material ID	Particle Size Range (mm)	Equivalent U.S. Sieve Series	Description of Material
A	0.075 - 4.76	-4/+200	Sand**
B1	0.002 - 0.075	-200	Ground Silica
B2	0.002 - 0.075	-200	Chemicals*
C	<0.002	N/A	Kaolin
D	<0.002	N/A	Bentonite

* 60 wt% Al_2O_3 + 10 wt% ($Ca(OH)_2$ + 30 2t% MgO

** Ohio Department of Transportation Specification 703.02 for Concrete Sand. ASTM C-33 for fine aggregate, or equivalent.

Table B - Surrogate Feed Blends
(Dry Basis)

Surrogate Feed	Basic Surrogate Material ID				Plasticity Index (±15%)	Plastic Limit (±15%)
	A	B	C	D		
	wt %	wt% (B1/B2)	wt%	wt%		
1	80	20 (20/0)	0	0	NP	NP
2	25	50 (20/30)	25	0	15	30
3	0	54 (0/54)	30	16	40	55
4	30	60 (20/40)	10	0	20	20

Article 3.6 (continued)

Table C - Feed and Product Moisture Contents and Evaporation Rates for Acceptance Testing

Test Runs	Feed		Product	Off-Gas	
	Moisture Content (wet basis)	Rate (tons/hr)	Moisture Content	Entrained Solids (lbs/hr)	Evaporated Water (tons/hr)
1	40%	per SELLER	10%	per SELLER	10
2	80%	per SELLER	10%	per SELLER	10

B. Methods of Acceptance:

Acceptance of the equipment shall be based on its ability to successfully perform the acceptance tests at the specified conditions within the specified ranges and limits. The methods shall include the following:

1. Demonstrate that the equipment is capable of drying the feed from the specified feed moisture content to the specified product moisture content at the specified evaporation rate (see Table C). Demonstrate maximum push-through capacity of wet feed (tons/hr).
2. Demonstrate the capability to adjust the feed rate, residence time, and heat transfer conditions as required for each test run.
3. Demonstrate continuous 3 hours of steady-state operation for each test run. If the steady-state condition is interrupted due to a mechanical or other problem, the test shall be restarted and run at steady-state for a continuous 3 hours after correction of the problem. (Note: Steady-state is achieved when the rate of solids fed to the dryer equals the rate of solids leaving the dryer, and targeted product moisture content is achieved.)
4. Demonstrate control of (1) furnace temperatures (each zone if applicable), (2) residence time, (3) feed rate; and demonstrate that the seals meet specification requirements.
5. Demonstrate the mechanical performance of each component of the drying equipment to prove that the components and materials of construction will withstand the conditions at the specified design parameters (e.g., temperatures, pressures, thermal loads, mechanical loads, processing rates). As part of this demonstration, the parameters listed in Table D will be measured. The acceptable limits for those parameters, if applicable, are also listed in Table D.

Article 3.6 B (continued)

Table D - Acceptance Limits for Dryer Parameters

Parameter	Limits
Furnace Skin Temperature	<125°F
Moisture Content of Feed	Table C value ± 2.5%
Moisture Content of Product	Table C value ± 2.5%
Feed Rate	Table C value ± 2.5%
Entrained Solids in Process Off-Gas	Table C value ± 2.5%

END OF SECTION

APPENDIX A

WASTE CHARACTERIZATION SUMMARY

WASTE CHARACTERIZATION SUMMARY

1.0 BACKGROUND

The feed to the dryer will consist of the contents from eight separate waste pits (Pits 1 through 6, the Burn Pit, and Clearwell). These pits contain secondary processing wastes resulting from a uranium processing facility. Consequently, the feed will cover a broad range of characteristics. The majority of feed material is composed of general sump sludge, neutralized raffinate, and magnesium fluoride.

The general sump sludge consists of 1) filtrates from various processing plants, 2) wastewater from the laboratory, and 3) lime. Raffinate from the solvent extraction operation was neutralized and sent to the pits. The magnesium fluoride in the pits was produced by the reduction of uranium tetrafluoride to uranium metal using magnesium metal. Some of the resulting magnesium fluoride slag was reprocessed to recover uranium. The insoluble materials left over after the acid digestion recovery process were filtered out, reslurried, mixed with lime, and pumped to the pits.

Other wastes known to have been deposited in the pits include:

1) Contaminated asbestos materials
2) Contaminated rags, paper, and polyethylene
3) Dust collector bags
4) Scrap salts
5) Uranium and thorium tetrafluoride
6) Contaminated soil, rocks, sand, brick, and ceramics
7) Dust collector residues
8) UO_3 and U_3O_8
9) Miscellaneous sludges
10) Uranium chips and turnings
11) Water softening and treatment sludges
12) Graphite crucibles and molds
13) Ash from burning or incineration (pallets, paper, graphite, oils)
14) Flyash from coal-fired boiler
15) Steel drums

(Note that all dryer feed will be processed to size reduce items so they do not exceed 4 inches in any dimension.)

Samples of the pit wastes have been characterized by several organizations. The data is summarized in this appendix. One important characterization effort was performed by the University of Cincinnati (UC). They classified the wastes based on the Unified Soil Classification System (USCS). Subsequent test work has focused on four major classifications: nonplastic (NP-Type 1), and low-plasticity silt (ML-Type 2), high-plasticity silt (MH-Type 3), and low-plasticity clay (CL-Type 4).

Bench- and pilot-scale drying tests were performed by Parsons using surrogate materials. The surrogates were developed to cover the range of physical characteristics exhibited by the actual wastes. Four surrogates were formulated to first meet the Atterberg limit criteria that would place them in the appropriate USCS group, and also have particle size distributions similar to those of the actual pit wastes. . The pilot-scale drying test were performed in batch and continuous, indirect and direct rotary dryers. The surrogate wastes to be used during acceptance testing are the same as one of the surrogates used during pilot-scale testing (see Tables A and B, Article 3.6).

2.0 PIT WASTE COMPOSITION

In general, the waste pits contain a variety of materials that are not homogeneous, and there is a degree of uncertainty concerning the range of possible pit constituents. There are thought to exist pockets of uranium metal fines from machining operations, which may release heat through pyrophoric reaction in the dryer. Pockets of other reactive materials may, or may not be present, in containers or completely free of containment.

It should also be noted that the sampling techniques used to develop the remedial investigation (RI) database create a certain amount of unpredictable bias. Pit materials that were resistant to hand sampling were often not included. Specific on-site knowledge gained from one of the IT sampling teams indicated that Pit 4 contained significant amounts of asphalt, which were avoided during the sampling. Additionally, certain areas of the pits could not be accessed safely, and were therefore omitted from the characterization.

The following sections present a summary of the pertinent data collected from the RI and the Parsons Design Study. Many of the tables present maximum and minimum values, taken from the RI. Neither the maximums nor the minimum values should be taken as the absolute maximums or minimums for the pits as a whole. The extent of the area to be remediated and the number of samples taken during the characterization do not preclude the possibility of higher concentrations of certain materials in isolated pockets within the various pits. The information is categorized by chemical class or type.

By far the largest percentage of pit waste is relatively inert salts and oxides, which will pass through the dryer unchanged in form.

2.1 Speciated Organics

The concentrations of specific chemicals in the pits are below threshold concentrations that could impact physical operation of the dryer. Table A presents the maximum potential feed rates of the prominent specific organic compounds into the dryer. This data set does not attempt to predict mixing of pit materials or take natural dewatering into account. Of particular concern are the carcinogenic chemicals, (anthene series) and PCBs. This data set is derived from the Parsons OU1 Design Package and formed the basis for their dryer design.

Table A
Potential Feed Rate into Dryer
@ 30 tons/hr

Component	Pit 1	Pit 2	Pit 3	Pit 4	Pit 5	Pit 6	Burn Pit	Clear-well
	lb/hr	lb/hr	lb/hr	lb/hr	lb/hr	lb/hr	lb/hr	lb/hr
4,4 DDT	0.070	0.002	0.000	0.000	0.000	0.000	0.000	0.000
Aroclor 1248	0.439	0.000	0.424	0.139	0.508	0.000	0.000	0.035
Aroclor 1254	0.571	0.000	0.300	0.125	1.017	0.068	0.241	0.077
Benzoic Acid	0.193	0.000	0.432	0.081	0.000	0.000	0.000	0.000
Bis(2-Ethyl hexyl) Phthalate	0.079	0.000	0.097	0.050	0.377	0.097	0.304	0.070
Diethyl phthalate	0.000	0.000	0.380	0.042	0.000	0.000	0.157	0.146
Fluoranthene	0.000	0.856	0.088	0.332	0.000	0.000	0.501	0.324
Phenanthrene	0.105	0.647	0.088	0.295	0.000	0.000	0.472	0.220
Pyrene	0.000	0.435	0.088	0.166	0.000	0.000	0.439	0.146
Tetrachloroethene	0.029	0.000	0.000	0.010	0.000	3.087	0.000	0.000
Tributyl Phosphate	1.097	0.068	0.000	1.328	0.000	0.000	0.000	0.000
2,4,5-Trichlorophenol	0.000	0.000	0.000	0.000	0.000	0.000	0.000	0.794

The data set in Table A is contrasted with the same target organics, plus benzo(a)pyrene from the RI study and CIS data. Table B presents the potential feed rates based on the average concentrations from the RI and when necessary, CIS data sets.

Table B

Average Dryer Feed Rates
of Selected Regulated Organic Compounds
Assuming 30 tons/hr Waste Feed Rate

Component	Pit 1	Pit 2	Pit 3	Pit 4	Pit 5	Pit 6	Burn Pit	Clear well
	lb/hr	lb/hr	lb/hr	lb/hr	lb/hr	lb/hr	lb/hr	lb/hr
4,4 DDT	0.000	0.000	0.000	0.000	0.000	0.000	0.000	0.000
AROCLOR 1248	0.217	0.131	0.074	0.200	0.041	0.000	0.000	0.011
AROCLOR 1254	0.294	0.000	0.062	0.138	0.069	0.012	0.146	0.018
Benzoic Acid	0.046	0.137	0.077	0.044	0.000	0.000	0.000	0.000
Bis(2-Ethyl hexyl) Phthalate	0.017	0.054	0.024	0.042	0.046	0.033	0.126	0.020
Diethyl phthalate	0.000	0.054	0.077	0.021	0.000	0.000	0.042	0.031
Fluoranthene	0.021	4.318	0.025	0.117	0.000	0.000	0.204	0.071

Table B (continued)

Average Dryer Feed Rates of Selected Regulated Organic Compounds Assuming 30 tons/hr Waste Feed Rate

Component	Pit 1	Pit 2	Pit 3	Pit 4	Pit 5	Pit 6	Burn Pit	Clear well
Phenanthrene	0.042	4.262	0.024	0.133	0.000	0.000	0.191	0.000
Pyrene	0.017	3.605	0.024	0.098	0.000	0.000	0.180	0.000
Tetrachloroethene	0.000	0.000	0.000	0.003	0.000	0.868	0.000	0.000
Tributyl Phosphate	0.836	1.346	0.000	3.600	0.000	0.000	0.000	0.000
2,4,5-Trichlorophenol	0.000	0.000	0.000	0.000	0.000	0.000	0.000	0.228
Benzo(a)pyrene	0.000	1.231	0.023	0.044	0.000	0.000	0.058	0.000

The behavior of these organic compounds in the dryer will depend on the physical and chemical properties of the individual species. Some of the relevant chemical properties of these organic compounds are presented in Table C.

Table C
Chemical Properties of the Prominent Organic Compounds

Compound	Melting Point (F)	Boiling Point (F)	Vapor Pressure (mm Hg)	Comments
4,4 DDT	226		1.9×10^{-7} @ 68°F	
AROCLOR 1248		340-375		
AROCLOR 1254		340-375		
Benzoic Acid	251	480		
Bis(2-Ethy hexyl) Phthalate	-58	723		
Diethyl phthalate	-41	568	14 @ 325°F 30 @ 360°F 734 @ 563°F	
Fluoranthene	225	482		
Phenanthrene	212	644		
Pyrene	300	759		
Tetrachloroethene	-9	251	14 @ 68 24 @ 86 45 @ 104	
Tributyl Phosphate	-110	554		decomposes at 554
2,4,5-Trichlorophenol	143	487		

2.2 Total Organic Carbon

Based on the RI, significant concentrations of organic carbon are present in every pit. Table D shows the average, maximum and minimum concentrations of TOC, taken from the RI study finalized in 1994. It should be noted that at least a portion of the graphite known to be present in the pits will be included in the TOC analysis results, due to the conditions under which TOC analysis are carried out. However, there is no data available, at present, to draw conclusions about how much of the TOC shown is actually graphite. The more conservative approach is to assume that the TOC is made up entirely of organic species and other types of organic species, such as asphalt. An exception to this conservative approach will be in the case of the burn pit, where it is logical to assume that a large portion of the TOC is indeed graphite and/or charcoal. The bulk of these species will be non-regulated volatile or semi-volatile organic materials bound to particulate matter in the waste.

Table D
Total Organic Carbon Concentration Summary (percent by weight, dry basis)

	Pit 1	Pit 2	Pit 3	Pit 4	Pit 5	Pit 6	Burn Pit	Clear well
Avg	2.27	11.23	15.23	2.987	1.828	1.411	15.20	5.15
Max	3.36	11.37	17.6	5.365	3.500	3.500	15.20	10.80
Min	0.688	11.08	12.86	0.609	0.261	0.251	15.20	0.300
#	3	2	2	2	10	8	1	7

- refers to the number of determinations

One of the organic compounds known to exist in the pit materials is tributyl phosphate (TBP). It is known that TBP was used in large quantities during the reprocessing of uranium and other fissionable materials at Fernald. Kirk and Othmer, Vol. 9 states that, "in the Purex process, the spent fuel is dissolved in nitric acid and extracted with TBP in 30 volume percent solution in an aliphatic diluent such as kerosene." TBP would react with water in the alkaline pits to form derivative organic compounds. The derivative organic compounds would not be targeted by a standard Appendix IX scan and would only show up in a TOC analysis. While only ppm levels of TBP were found in the pits, the total phosphorus results support the hypothesis that significant quantities of TBP laden waste was disposed of in the pits.

2.3 Oil and Grease

Oil and grease analyses were performed selectively on several of the pits. Oil and grease results should be viewed as minimum values. The analytical method involves the extraction of the sample by a organic solvent, followed by evaporation to dryness and weighing to a final weight. The extraction process is not 100 percent effective on all types of solid waste samples due to limited solubility and the inability of the solvent to strip organic components from some types of waste. Secondly, lighter organics can volatilize during the drying causing a negative bias. Table E presents the summarized data from the OU1 RI/FS study.

	Table E Oil and Grease Concentration Summary (percent by weight, dry basis)							
	Pit 1	Pit 2	Pit 3	Pit 4	Pit 5	Pit 6	Burn Pit	Clear well
Avg	not performed	0.59	0.060	0.492	not performed	0.0030	not performed	0.014
Max	not performed	1.6027	0.151	1.79	not performed	0.0083	not performed	0.029
Min	not performed	0.027	0.012	0.054	not performed	0.0022	not performed	0.005
#		3	4	4		8		7

- refers to the number of determinations

2.4 Organic Nitrogen

Organic nitrogen is present in significant quantities in each of the pits, except Pit 1. Table F presents organic nitrogen data from the RI.

	Table F Organic Nitrogen Concentration Summary (ppm by weight, dry basis)							
	Pit 1	Pit 2	Pit 3	Pit 4	Pit 5	Pit 6	Burn Pit	Clear well
Avg	U	5090	4179	315	266	524	552	500
Max	U	11700	8914	833	626	801	642	909
Min	U	0.1	127	3.2	0	337	461	205
#	1	2	6	4	10	8	2	7

- refers to the number of determinations

2.5 Total Phosphorus

Pits 2 and 3 contain significant levels of phosphorus. One potential source of phosphorus is TBP used in the Purex process to recover uranium. In the pits, TBP should react with water and will be incompatible with caustic materials. In contrast to the high total phosphorus results, the phosphate results are low or undetectable. It is unclear what forms the phosphorus will take in the dryer. At the pH values shown in Table G, no free phosphoric acid should be present in the pits. Calcium, potassium and metal phosphates are stable and would pass through the dryer relatively unaffected. However, the bulk of common organo-phosphorus and inorganic phosphorus compounds, (other than inorganic phosphates) have boiling points less than or equal to the planned dryer shell temperature.

One possibility is that the volatile phosphorus compounds will evolve, react with the moisture and oxygen in the sweep gas to form linear polyphosphoric acids in the process. Kirk and Othmer, states that once formed these acids are "hygroscopic, viscous, oily, gummy and may also consist of a mixture of glassy and crystalline materials." When these acids are dissolved in excess water they degrade to phosphoric acid. It is also conceivable that evolving phosphorus will form P_2O_5 which will condense into submicron particulate. More likely, however, is that evolving phosphorus will form phosphoric acid directly on contact with water vapor.

Partially hydrolyzed tributyl phosphate could form phosphate esters of various types in the pits, which would create corrosive *ortho*-phosphate ions in the dryer. The phosphate ion would form at the shell/material interface and attack the inner surface directly during the drying process.

	Table G **Total Phosphorus Concentration Summary (percent by weight, dry basis)**							
	Pit 1	Pit 2	Pit 3	Pit 4	Pit 5	Pit 6	Burn Pit	Clear well
Avg	.00067	3.80	1.11	.0062	.071	.199	.050	U
Max	.00067	4.37	5.78	.015	.110	.385	.078	U
Min	.00067	3.41	.023	.0002	.042	.057	.021	U
#	1	3	6	4	10	8	2	7
Pit pH (avg.)	not performed	8.04	7.97	6.74	not performed	not performed	8.53	not performed

2.6 Metal Salts and Oxides

No true analytical data is available on specific salts in the pits. The Parsons waste composition was assembled from the data on cations and anions concentrations in each of the pits. Parsons combined anions with cations; however, of these combinations, only a few are actually known to have been discarded to the pits, or would be expected to exist in the reported forms. Magnesium fluoride is known to have been used in the Fernald processes. Calcium hydroxide is known to have been placed in the pits in quantities sufficient to neutralize acids and bring the pH up to acceptable values. It is possible that the uranium in the pits is in the forms suggested by the Parsons data, (U_3O_8 and UO_3). However, the exact form that the bulk of the uranium takes in the pits is, at this time, unknown. The most prevalent salts based on the Parsons data, which were derived from the RI, are shown in Table H. Average and maximum concentrations of metals directly from the RI are shown in bold.

Uranium (IV) fluoride UF_4 is of particular importance because of its potential to react directly with water vapor in the dryer to form hydrofluoric acid (HF). The rate of reaction as a function of temperature of UF_4 is being investigated to ascertain the potential.

	Table H Prominent Salts and Oxides Concentration Summary (approximate percent by weight, dry basis)							
	Pit 1	Pit 2	Pit 3	Pit 4	Pit 5	Pit 6[4]	Burn Pit	Clear well
MgF_2 Total Mg	28.6 **6.1/12.9**	0 **4.72/6.79**	0.38 **3.44/5.17**	0.63 **1.61/3.40**	17.4 **3.20/4.30**	43.23 **2.15/4.19**	0.004 **1.70/2.57**	15.9 **2.08/2.72**
$Ca(OH)_2$[1] Total Ca	33.2 **7.71/19.7**	3.1 **8.34/10.4**	30.6 **12.0/19.0**	24.4 **1.54/3.27**	43.2 **17.8/25.0**	22.81 **7.82/15.7**	43.1 **5.9/8.89**	49.6 **13.8/17.7**
Fe_2O_3 Total Fe	6.04 **0.13/0.26**	19.7 **2.24/3.92**	4.06 **1.62/2.58**	9.89 **0.35/0.74**	3.41 **1.26/2.07**	2.56 **0.82/1.48**	17.9 **2.02/3.12**	5.2 **1.76/2.03**
Al_2O_3 Total Al	4.09 **0.24/0.34**	7.68 **1.60/2.31**	11.8 **1.09/1.74**	4.35 **0.55/1.07**	3.88 **0.85/1.19**	5.83 **1.09/1.98**	4.52 **0.64/0.86**	7.76 **1.63/2.07**
UF_4	2.24	0	0	1.77	0.189	1.58	0.03	0.14
U_xO_x [2]	4.11 **1.70/4.84**	10.58 **0.29/0.58**	0.58 **0.34/0.59**	30.3 **5.18/11.6**	0.346 **0.21/0.37**	2.85 **12.8/27.7**	1.27 **0.20/0.45**	0.26 **0.12/0.27**
Mass accounted for[3]	78.3	41.1	47.4	71.37	68.41	78.86	66.83	78.84
Pit pH	not performed	8.04	7.97	6.74	not performed	not performed	8.53	not performed

Parson's Data is shown as the top number in each cell. RI values for the average and maximum are in bold type.

1 - Calcium hydroxide will likely have reacted to form calcium carbonate, based on the pH value data.
2 - Sum of U_3O_8 and UO_3, based on Parsons data.
3 - The mass accounted for as listed in the table is the sum of the individual percentages listed in the table.
4- An error as to the placement of a decimal point was discovered in the Parsons data which impacts the relative concentrations of each constituent. Corrections are reflected in the table.

The balance of material in the pits is made up of combinations of metal oxides, metal salts, organic nitrogen and organic carbon. The melting points and other physical characteristics of the prevalent metallic compounds are shown in Table I.

Table I Prominent Salts and Oxides Chemical Properties Summary			
Compound	Melting Point (F)	Boiling Point (F)	Specific Notations
MgF_2	2305	4105	

$Ca(OH)_2$	971.6		
$CaCO_3$	1652		decomposes @ 1652
Fe_2O_3		2663	decomposes
Al_2O_3	3664	5396	
U_3O_8		2372	decomposes
UO_3			decomposes

2.7 Radionuclides

Considerable analysis has been performed to quantify the levels of radioactive materials in the pits. Complex blending schemes have been completed to mix highly contaminated waste with less contaminated materials to meet acceptance criteria. Table J lists the more prevalent radioactive compounds found in the pits, and information that may impact the design of the dryer.

Table J

Compound	Range of Melting Points (F)	Range of Boiling Points (F)	Decays by	Half Life	Comments
U-235	354 - 4262	737 - 7898	α	7.1×10^8 yr	some forms decompose at low temperatures
U-238	354 - 4262	737 - 7898	α	4.5×10^9 yr	
U-234	354 - 4262	737 - 7898	α	2.47×10^5 yr	some forms decompose at low temperatures
Tc-99	122 - 1,800	140 - 591	β^-	2.12×10^5 yr	most compounds can volatilize
Cs-137	83.8 - 1,130	up to 2372	e^- β^- γ	30 yr	some forms decompose at low temperatures.
Th-230	397 - 5828	1130 - 7952	α γ e^-	80000 yr	nitrates and halogenated forms decompose at relatively low temperatures, oxide is very chemically stable
Ra-226	1292-2120	1652 and up	α γ e^-	1,620 yr	
Ra-228	1292-2120	1652 and up	β^- e^-	6.7 yr	
Rn-222	-95.8	-79.6	α γ	3.82 days	inert gas

Melting points and boiling points ranges are based on commonly available compounds listed in Lange's Handbook, which could conceivably exist in the pits.

3.0 SIZE DISTRIBUTION

In general, the bulk of the feed is very fine (less than 200 mesh). Note that all feed must be less than 4 inches in any dimension so any debris from the pits will be size reduced prior to being fed to the dryer.

4.0 MOISTURE CONTENT

The moisture contents of the actual pit wastes are reported to vary from 10 percent to over 600 percent (all moisture contents expressed on a dry basis = (lb water/lb dry solids) x 100 percent). However, the pit materials will be processed to provide feed with a specified moisture content ranging from 30 to 200%.

5.0 BULK DENSITY

The solid specific gravities of the feed range from 2.60 to 3.25. Bulk (slurry) densities calculated at the minimum and maximum moisture contents of the feed assuming an average solid specific gravity of 2.9, range from 79 to 126 lb/ft^3.

6.0 PLASTICITY DATA (ATTERBERG LIMITS - ASTM D4318)

The dryer feed will consist of materials ranging from non-plastic to high-plasticity silt based on the Atterberg limit data reported in Table K.

Table K - Average Atterberg Limits - Four Types of Feed

Feed Type	Description	Plastic Limit	Plasticity Index
1	Non--plastic	N/A	N/A
2	Low-plasticity Silt	30	15
3	High-plasticity Silt	55	40
4	Low-plasticity Clay	20	20

7.0 WASTE/SOIL CHARACTERISTICS FOR EXCAVATION AND HANDLING

This section provides a general description of the waste materials found in the OU1 waste pits, primarily in terms of soil material classifications. The data were obtained from the OU1 Remedial Investigation/Feasibility Study (RI/FS) and University of Cincinnati Accelerated Life Testing and Environmental Research (ALTER) testing of materials obtained from small diameter samplers (split-spoon and Shelby Tube) and bulk archived sample material from auger boring and grab sampling. The pits, especially the covered pits, contain debris of various sizes. Various debris were encountered during DEEP wet trenching with a track hoe at various locations at Pits 1, 2, and 3. Debris encountered included large pieces of concrete rubble, coarse gravel, planks of lumber, sheet metal, metal bands, and metal wire.

Waste Pit 1. Based on ALTER and OU1 RI/FS data, in general, Pit 1 waste materials behave like nonplastic silts (ML) (with nonplastic fines) with little cohesion and low dry strength. The moisture contents ranged from about 16 to 40 percent (dry weight basis).

Waste Pit 2. Based on ALTER data and OU1 RI/FS data, in general, Pit 2 waste materials range in behavior from nonplastic silts and sands (silt with sand, sandy silt, silty sand) to highly plastic silts (sandy elastic silt). Some lean clays are also present. Moisture contents range from about 17 percent (lean clay with sand) to 320 percent (nonplastic silt with sand). Moisture content of the sandy elastic silt material ranges from about 70 to 230 percent.

Waste Pit 3. Based on ALTER and OU1 RI/FS data, in general, Pit 3 waste materials range in behavior from low plasticity silts and sands (sandy silt and silty sand) to highly plastic silts (sandy elastic silt, elastic silt with sand). Some lean clays are also present. Moisture contents range from about 35 percent (sandy silt) to 153 percent (elastic silt with sand). Moisture content of the sandy elastic silt material ranges from about 42 to 153 percent.

In-place strength of Pit 3 waste from the DEEP Cone Penetrometer Test (CPT) probes and Standard Penetration Test (SPT) tests indicates very low strengths over much of the pit area (below the cap materials). Low strengths are expected to result in waste collapse at quite low natural slopes, which may present safety concerns and excavation inefficiencies due to flat slopes. Based on the relative values from CPT data and previous data, angles of repose are estimated to range from 10 to 12 degrees prior to dewatering. Laboratory test results to confirm the shear strengths estimated from the CPT probes are not yet available. In addition, existing data also indicate that the moisture content for must of the waste (in situ conditions) is above the liquid limit, indicating the material could behave like a fluid. Dewatering may be necessary in Pit 3 to maintain an open, relatively flat, safe slope.

Waste Pit 4. Based on ALTER data and RI/FS data, in general, Pit 4 waste materials range in behavior from nonplastic silts (silt, silt with sand, and sandy silt) to lean and silty clays (lean clay with sand, sandy lean clay, sandy silty clay). Moisture contents range from about 10 percent (sandy lean clay) to 62 percent (sandy silty clay).

Waste Pit 5. Based on ALTER data, in general, Pit 5 waste material behaves as a high-plasticity elastic silt. The pit also contains some nonplastic silt. In general, the moisture content of the waste material in Pit 5 is the highest of the OU1 waste material tested. Moisture content of the elastic silt material ranges from about 161 to 620 percent. The moisture content of the nonplastic silt material was about 109 to 115 percent.

Based on preliminary DEEP data, waste materials appear to be low density with extremely high moisture contents that do not tend to be free-draining.

Waste Pit 6. Based on ALTER data, in general, Pit 6 waste material behaves as a nonplastic to low plasticity silt (silt, sandy silt, silt with sand, and silty sand). The pit also contains some high plasticity elastic silt. Water content of Pit 6 materials range from about 27 percent (silt with

sand) to 425 percent (nonplastic silt). Based on preliminary DEEP data, waste materials appear to be free draining.

Burn Pit. Based on RI/FS and ALTER data, in general, Burn Pit waste material ranges in behavior from a low plasticity silt (sandy silt) to a silty sand. Some lean clay with sand is also present. Water content of Burn Pit waste materials range from about 25 percent (lean clay with sand) to 43 percent (silty sand).

Clearwell. Based on ALTER data, in general, the waste in the Clearwell contains materials behaving as high-plasticity silts (sandy elastic silt, elastic silt with sand), silty sand, and sandy lean clay. The water contents of these materials range from about 35 percent (sandy lean clay) to 72 percent (sandy elastic silt).

SECTION 13122

PRE-ENGINEERED BUILDING

PART 1 GENERAL

1.1 SECTION INCLUDES

This section covers design, fabrication, and erection of the prefabricated metal buildings for the remedial facilities to be installed as part of the Waste Pit Remedial Action Project in Fernald, Ohio.

The buildings shall be provided complete with all primary and secondary structural framing, bracing, connections, monorail beam and hangars, metal wall and roof coverings, flashings, closures, ridge ventilators, translucent roof panels, gutters and downspouts, sealer and caulking, metal trim, fasteners, and other miscellaneous metal building components or accessory items as specifically indicated on the drawings or in these specifications.

The buildings shall include rough framing and flashing for doors, windows, and louvers that will be furnished and installed by the Contractor as specified under other sections of these specifications.

Anchor bolts embedded in the concrete foundation will be furnished and set by the Contractor in accordance with the design drawings, these specifications, and the anchor bolt setting plan of the building manufacturer.

Stairs, doors, windows, louvers, glazing, hardware, plumbing, heating, ventilating, air conditioning, hoisting equipment, electrical work, and interior finishes will be as specified in other sections of these specifications.

1.2 RELATED SECTIONS

A. Section 09900 - Painting General

1.3 REFERENCES

The building design and construction shall comply with all applicable federal, state, and local building codes including:

A. The 1994 Ohio Basic Building Code OBBC).

B. Metal Building Manufacturers Association (MBMA)
   1. "Low Rise Building Systems Manual".

C. American Society of Testing Materials (ASTM).

D. Underwriter Laboratory (UL).

E. American Institute of Steel Construction (AISC).

In case of conflicting requirements, the Ohio Basic Building Code shall govern.

1.4 GENERAL REQUIREMENTS

Building components and accessories furnished and installed under this section shall be fabricated, assembled, and erected in full conformity with the drawings, specifications, engineering data, instructions, and recommendations of the prefabricated building manufacturer.

A. The following drawings form a part of this specification as applicable to the design and fabrication of the metal building.

Facility	Drawing No.	Title
Material Handling Building and Dryer Building	M-15-02-002 M-15-02-003	General Arrangement Elevations and Sections
Railcar Loadout Building	M-35-02-001 M-35-02-002	General Arrangement Elevations and Sections
Warehouse	M-90-02-001	Elevations and Sections
Maintenance Building	M-90-02-002	Elevations and Sections

B. Coordination
The building manufacturer shall coordinate with the Contractor for the shipment, erection, and field quality control of the metal building, the erection of the hoisting equipment, and the installation of interior systems and finishes.

1.5 SUBMITTALS

A. Complete drawings and data shall be furnished showing anchor bolt locations, construction details, transverse cross-sections, details of roof and wall panel installation, location of all openings, details of framed openings, and flashing details.

B. Data shall include design loads and load combinations, and all loadings transmitted to the foundations. A letter of design certification, signed by a registered professional engineer in the State of Ohio, shall be submitted.

C. Drawings shall be accompanied by the manufacturer's erection information indicating standard recommendations, erection details, and piece markings.

1.6 DELIVERY, STORAGE, AND HANDLING

All factory finished material shall be properly protected for shipment in accordance with accepted packing standards. Care shall be taken at the jobsite for proper storing and protection of the units prior to erection. Any minor damage shall be touched up before installation with color-matched, air-drying paint furnished by the manufacturer; no other finish will be accepted.

1.7 WARRANTY

The enclosed completed structure shall be guaranteed to be completely weathertight under all weather conditions for a period of three years after final acceptance of the structure. The coating system for roof and wall panels shall be warranted for a period of 20 years against cracking, chalking, fading, peeling, or other coating failure.

PART 2 PRODUCTS

2.1 PERFORMANCE AND DESIGN REQUIREMENTS

Minimum design loadings and requirements shall be in accordance with the Ohio Basic Building Code (OBBC) and as listed below.

A. A minimum live load of 20 psf or a snow load shall be applied to the roof as specified in the OBBC. Reduction of load due to tributary loaded area will not be permitted. Roof snow load shall be derived from a ground snow load of 25 psf in accordance with the following design values:

Snow exposure factor (Ce)	0.7
Importance factor	1.0

B. A collateral dead load of 15 psf shall be applied to the roof as specified in the MBMA Manual. Reduction of load due to tributary loaded area will not be permitted.

C. A one (1) ton capacity electric hoist load shall be applied at any location on the monorail beam as specified in the MBMA Manual. Vertical deflection without impact shall not exceed 1/450 of the monorail beam span.

Estimated hoist and trolley weight 500 lbs

D. A wind load due to a basic wind speed of 80 mph shall be applied and proportioned as pressure, suction, and uplift forces in accordance with the OBBC and the following design values. Parts and portions winds load shall be a specified in the MBMA Manual.

Wind exposure classification	"C"
Importance factor	1.0

E. A seismic force for the building and components shall be derived in accordance with the MBMA Manual.

For steel buildings, columns and posts shall be considered "hinged" at their base. The building foundation shall not be required to accept either full or partial moment fixity from steel building columns or posts. Anchor bolts and related anchorages shall be designed to resist column and brace reactions from loading combinations. No shear lugs will be permitted beneath base plates.

Maximum drift shall be limited to 1/200 of the building height.

Future expansion of the buildings is not planned. Endwalls may by post and beam construction.

Metal roof panels shall be Class 90 in accordance with Underwriters' Laboratories "Tests of Wind-Uplift Resistance of Roof Assemblies - UL 580" and shall be listed for Class 90 in Underwriters' Laboratories "Building Materials Directory".

2.2 MATERIALS

Materials for the building shall be new, free from defects, and shall meet the following requirements:

Frames and structural components	Steel ASTM A36 or ASTM A572.
Structural bolts	ASTM A325, high strength, black.
Secondary framing	Manufacturer's Standard.
Roof Panels	Manufacturer's Standard.
Liner Panels	Manufacturer's Standard.
Wall Panels	Manufacturer's Standard.
Gutters and downspouts	7" x 5" contour gutter, 5" x 4" downspout; Minimum 26 gage galvanized steel Conforming to ASTM A525, G-90 coating with factory applied finish.
Flashing and trim	Galvanized steel with factory applied finish.
Roof curbs	Manufacturer's Standard.

Exposed fasteners	Hex washer head Scrubolts with plastic Color caps to match wall color.
Sealant	Manufacturer's Standard.
Miscellaneous accessories	Manufacturer's Standard.

2.3 PAINTING

Finish of exposed surfaces of wall panels, roof panels, liner panels, flashings, and trim shall be a baked-on flouropolymer finish "Kynar 500", minimum 1 mil thickness. Colors of all panels, trim, and flashings shall be selected from the manufacturer's standard line of colors.

All steel parts which are not specified to be factory finished and which are not zinc coated shall be cleaned and shop primed with fabricator's standard rust-inhibitive primer.

Any surface abraded or damaged during fabrication or erection shall be touched up or repainted with manufacturer's recommended paint system. All welds shall be thoroughly cleaned and touched up with a suitable primer.

All factory finished surfaces which have become damaged prior to acceptance of the building by IT shall be touched up and repainted as recommended by the manufacturer and to the satisfaction of IT.

Field painting of metal surfaces not finish painted at the factory is specified in the painting section 09900.

2.4 FABRICATION

All primary framing shall be shop fabricated for bolted field assembly. Secondary framing shall have bolted or welded connections. All members shall be accurately shop punched. All framing members shall have an easily visible identifying mark.

Welding shall be in accordance with AWS D1.1 Structural Welding Code, latest edition.

PART 3 EXECUTION

3.1 ERECTION

The building shall be erected by an experienced metal building erector licensed by the building manufacturer. It shall be erected in accordance with the building manufacturer's instructions. Parts shall be plumb and level with a tolerance of 1 in 500. Fasteners shall be installed and tightened in all connections. Structural bolts shall be tightened by the turn-of-nut method as set forth in the AISC Manual of Steel Construction.

A copy of the building manufacturer's erection information shall be kept at the erection site at all times, and shall be available to all building trades.

The metal building erector shall be responsible for verifying that the anchor bolts set in the field and the anchor bolt holes in the baseplates are at the proper locations prior to starting building erection. If adjustments or corrections are required, they shall be submitted to IT prior to execution, and shall be made at no expense to IT.

Roof and wall panels, flashing, closures, and other building components shall be installed and sealed so that watertight construction is obtained. Panels shall be neatly cut and fitted around openings, door and window frames, and other installed accessories. All joints shall be lapped and sealed. Panels shall be securely fastened to structural framing and to each other.

Any factory finished surfaces abraded or damage during erection shall be repaired and the coating system touched up or repainted with manufacturer's touch up paint. All welds shall be thoroughly cleaned and prime painted.

Field painting of metal surfaces not finish painted at the factory is specified in the painting section.

3.2 FIELD TESTING

The building shall be leak tested prior to acceptance. Any leakage discovered shall be corrected and retested.

3.3 PROTECTION

All portions of the building shall be protected from damage during fabrication, shipment, site storage, and erection. Damaged parts shall be replaced with undamaged units unless field repairs are authorized by IT.

3.4 CLEANING

After completion of construction all soiled surfaces shall be cleaned per the manufacturer's instructions.

3.5 SCHEDULES

Design, fabrication, delivery, and erection of the building shall be in accordance with the Contractor's requirements. Anchor bolts shall be delivered in time to avoid delays in placing concrete.

-End of Section-

SECTION 13200

GENERAL TANKS AND VESSELS

PART 1 GENERAL

1.1 SECTION INCLUDES

A. This specification describes the general minimum requirements for the materials, planning, assembly, inspection, testing and fabrication of general tanks and vessels.

B. Equipment covered by this specification will operate at pressures not exceeding 15 PSI. ASME codes shall be used as a guide for the design and fabrication.

1.2 RELATED SECTIONS

A. Section 09900 - Painting General
B. Section 15250 - Insulation

1.3 REFERENCE, CODES AND STANDARDS

A. American Petroleum Institute (API)
1. API STD 12D - Specification for Field Welded Tanks
2. API STD 12F - Specification for Shop Welded Tanks
3. API STD 620 - Low Pressure Welded Tanks
4. API STD 650 - Specification for Welded Tanks

B. American Society of Mechanical Engineers (ASME)
1. ASME BPVC - Boiler and Pressure Vessel Code

C. American Water Works Association (AWWA)
1. AWWA D100-79 - Standard for Welded Tanks

D. American Welding Society (AWS)
1. AWS D1.1 - Structural Welding Code

E. American National Standards Institute (ANSI)

F. American Society for Testing and Materials (ASTM)

G. Steel Structures Painting Council (SSPC)

Where reference is made to specifications, codes, or standards compiled by other agencies or organizations, such reference is made for expediency and standardization and shall hereby be made a part of this specification.

In event of conflict between other referenced documents or specifications and this specification, this specification shall govern.

1.4 SYSTEM DESCRIPTION

A. Unless noted otherwise, all equipment shall be designed for a wind load of 110 MPH and seismic zone III.

1.5 SUBMITTALS

A. Vendor's drawings must show complete fabrication detail, material used, and include complete welding details showing location, size, and type of vessel weld seams and attachment welds. Drawing shall show Equipment Number, IT Purchase Order Number, and Shipping Weight. All nozzles to be identified on drawing by letter.

B. ASTM Number or ASME material specification, as appropriate, must be shown on vendor's drawings for all material such as shell, head, nozzle necks, flanges, studs, nuts, etc.

C. Vendor shall provide complete detailed design calculations on 8 1/2 inch by 11 inch sheets. Calculations shall be provided for each complete vessel/tank and all attachments. (Standard items such as ANSI flanges are excluded.)

D. Vendor to submit welding procedures and weld qualification procedures with approval drawings.

E. Miscellaneous: All reports, calculations, correspondence, etc., shall show Equipment Number and IT Purchase Order Number. Vendor's drawings for approval submittal date, and equipment delivery date, must be completed by the date specified on the order, unless specifically agreed otherwise.

F. Quotations: All quotations shall include thickness of materials used, and shall be based on type materials specified. Alternates or substitutions must have written approval of IT.

1.6 QUALITY ASSURANCE

A. All workmanship shall be in accordance with and equal to the best modern metal shop practices as recognized within the industry.

B. Vendor shall provide all quality control procedures, inspections, and testing to the extent necessary to assure that all work is performed in accordance with this specification.

1.7 DELIVERY, STORAGE, AND HANDLING

A. Vendor to protect all openings for shipment with wood or hardboard secured with light bolts. These covers shall be protected from the weather with tape around edges. Couplings shall be plugged with metal plugs.

B. Vendor shall utilize sufficient means of separation between the parts and materials along with adequate tie-downs so as to prevent unnecessary distortion or marring of components during the shipping process.

C. Properly reported shortages upon delivery at the job site must be replaced by the vendor at no additional cost.

D. Before shipment, vendor shall prepare and paint all surfaces of all parts and materials, except where noted on the drawings. This shall be done in accordance with the paint specification Section 09900 - Painting, number of coats, along with type and color of paint shall be as specified on the drawings.

E. No parts or materials shall be loaded and/or shipped until paint coating has thoroughly dried or cured.

PART 2 PRODUCTS

2.1 PRODUCTS

A. Minimum thickness of nozzle necks (without corrosion allowance) unless specified otherwise, shall be not less than standard wall for ALL openings.

B. Vendor to install all studs (bolts are not permitted on flanged connections), nuts and NEW gaskets for all completed connections. New gaskets shall be installed in place after hydro test.

C. All bolt holes to straddle vessel natural centerlines unless noted otherwise.

D. All welding must be as detailed on drawings approved by IT. All butt joints must be full penetration welds. All attachment welds must be continuous; no staggered welds are acceptable. All nozzle joints must be welded both inside and outside, unless noted otherwise.

2.2 MATERIALS

A. Minimum Thickness of Plate: In no case shall the nominal thickness of plate (excluding corrosion allowance) be less than (a) 3/16 inch for carbon steel or (b) 11-gauge for 316 stainless steel, thickness for other materials shall be determined by design.

B. The vessel, support lugs, saddles, legs, etc. shall be designed in accordance with acceptable engineering practices and applicable codes. Vendor shall indicate compliance by providing appropriate design calculations and basis for design.

C. All threaded studs, nuts etc. shall be coated with "Molycote" or equal.

2.3 FABRICATION

A. All nozzle projections to be 6 inches unless otherwise shown. All bottom nozzles shall be flush on inside, unless noted otherwise.

B. Provide lifting lugs for handling, unless noted otherwise

C. Weld backing strips shall not be acceptable unless specified otherwise.

D. Whenever practical, threaded connections on vessels should be avoided. If a threaded connection is to be used, use an internally threaded connection no smaller than 1 inch IPS. The threaded connection shall be a 3000 lb steel coupling or boss of similar proportions to a 3000 lb coupling, welded to the vessel. External threaded nipples are not acceptable.

E. Surface preparation and painting shall meet Section 09900 - Painting

F. Any method selected by vendor for cutting is suitable as long as cut edge is smooth, uniform, and clean from any burrs, sharp edges, or foreign deposits. Cut surfaces shall be within the acceptable tolerances for straightness and roughness as specified by ANSI B46.1.

G. Where possible and practical, sizing and arrangement of plates utilized shall be selected so as to reduce the quantity and distortion of joint or seam welding.

H. The following minimum requirements shall be maintained in the orientation and placement of assembly seams:
   1. All seams shall be located so as to clear or minimize the impact with nozzle openings, reinforcing pads, and internally placed supports or components.

2. Joints in horizontal vessels and ducts shall not be located coincident with or across saddle supports.
3. Where attachment welds are within two shell plate thicknesses of a seam, the weld shall be ground flush and inspected before welding on the attachment.

I. Shells rolled to required contours shall have no flat sections at the end of the plate where started or ended in the rolls. All plates shall be prepared for welding as per AWS D1.1 Section 3, and shall have all edges prepared for the appropriate weld joint configuration.

J. All forming, rolling and bending shall be done by use of pressure tools, and not by percussion blows. All bends shall be free of fractures and excessive thinning.

K. Splicing of plates, sheets, bars, and shapes to form larger or longer material sizes shall be permissible within certain limitations. Splices shall be kept to a reasonable minimum, with joints continuously welded with full penetration so that the splice shall develop full section strength. The finished spliced components shall be free of any distortion or misalignment and within the tolerance for straightness as specified for original materials.

L. Splicing of angle and pipe shapes will not be permissible, except where specifically noted and approved on the detail drawings.

M. In order to limit the amount of distortion when fabricating tank bottoms or cones, the number of plates used shall be kept to a minimum and of nearly equal width.

N. The curvature of any reinforcing pad shall follow the curvature of the vessel or duct so as that the maximum gap at any point shall not exceed 1/16" (1.5 mm). Where required, appropriate sized weep holes shall be provided in the reinforcing pad.

O. Nozzles and their flange faces shall be square with the nozzle centerline and bolting holes straddle natural centerlines. Fabricated nozzle flanges shall have smooth flat faces and be in accordance with the ANSI B16.5 standard for dimensions and arrangement for their specified size and rating.

P. All machining, milling, planing, threading, tapping, and etc., shall be done in accordance with the dimensions and/or notations on the detail drawings, and within the standards so recognized by the applicable regulatory codes governing such work.

2.4 LABELING

A. All equipment must bear manufacturer's nameplate showing maximum design conditions and manufacturer's serial number.

PART 3 EXECUTION

3.1 ERECTION

A. All parts, pieces, or members that must be handled separately during field erection shall be marked with an identifying part number as an exact indication of their position in the assembly or structure.

3.2 WELDING

A. All welding and preparation for such shall be in full accordance with the latest edition or revision of the American Welding Society "Structural Welding Code D1.1".

B. Only competent welders fully capable and pre-qualified of performing required welding shall be used. IT reserves the right to require from the vendor a qualification certificate for any or all welders utilized for work governed by this specification.

C. Adequate precautions and methods for minimizing distortion implied by welding of flame cutting must be utilized at all times. Welding, applied for the purpose of relieving stresses and distortion, shall be totally removed by grinding.

D. Weld metal shall not be used to build up the edges of plates that are too short or contain large cavities without written approval from IT.

3.3 INSPECTION, TESTING, AND TRIAL ASSEMBLY

A. All components will be inspected for proper dimensions, configuration, completeness, and adherence to fabrication tolerances. All weld profiles will be 100% visually inspected against defects or deficiencies in accordance to sections 3 or 8 of the AWS D1.1 specification. Additional random mechanical and/or non-destructive tests as per section 6 of the AWS D1.1 specification may be made as required, or stipulated by the vendor's own Quality Assurance Program. IT reserves the right to require the testing of any designated weld.

B. Approval by IT's authorized inspector, or waiver of shop inspection by IT, shall not relieve the vendor of the responsibility for furnishing materials and workmanship in accordance with this specification and all other Purchase

Documents, nor shall it relieve the vendor of making his own inspections or tests to certify such.

C. When specifically specified in the Purchase Documents, a complete shop trial assembly shall be required. The specified parts shall be assembled in an upright position, sufficiently bolted and match marked in a clear and distinct method so as to assure for proper alignment and re-assembly during field erection.

D. Hydrostatic or pressure testing may be required of certain components. If a requirement, the procedure and limits will be completely defined within the Purchase Documents.

-End of Section-

ATTACHMENT A

EQUIPMENT SPECIFICATIONS

EQUIPMENT SPECIFICATIONS

Venturi Sump Tank (T-5001)

Fluid:	Water with particulate and TDS
Working Volume:	5, 000 gallons
Top:	Open
Bottom:	Flat or cone
Material of Construction:	Carbon steel with internal epoxy coating or FRP

Caustic Tank (T-5002)

Fluid:	20% Sodium hydroxide solution
Working Volume:	500 gallons
Top:	Open
Bottom:	Flat or cone
Material of Construction:	Carbon steel with internal epoxy coating or FRP

Settling Tank (T-5003)

Fluid:	Water with particulate, hydrocarbons and TDS
Working Volume:	30,000 gallons
Top:	Open
Bottom:	Flat or cone
Material of Construction:	Carbon steel with internal epoxy coating or FRP

SECTION 13201

ASME CODE TANKS AND VESSELS

PART 1 GENERAL

1.1 SECTION INCLUDES

A. This specification describes the general minimum requirements for the materials, planning, assembly, inspection, testing and fabrication of ASME code stamped tanks and vessels.

B. Equipment covered by this specification will operate at pressures exceeding 15 PSI. ASME codes shall be used for the design and fabrication.

1.2 RELATED SECTIONS

A. Section 09900 - Painting General
B. Section 15250 - Insulation

1.3 REFERENCE, CODES AND STANDARDS

A. American Petroleum Institute (API)

B. American Society of Mechanical Engineers (ASME)
   1. ASME BPVC - Boiler and Pressure Vessel Code

C. American Water Works Association (AWWA)
   1. AWWA D100-79 - Standard for Welded Tanks

D. American Welding Society (AWS)
   1. AWS D1.1 - Structural Welding Code

E. American National Standards Institute (ANSI)

F. American Society for Testing and Materials (ASTM)

G. Steel Structures Painting Council (SSPC)

Where reference is made to specifications, codes, or standards compiled by other agencies or organizations, such reference is made for expediency and standardization and shall hereby be made a part of this specification.

In event of conflict between other referenced documents or specifications and this specification, this specification shall govern.

1.4 SYSTEM DESCRIPTION

A. Unless noted otherwise, all equipment shall be designed for a wind load of 110 MPH and seismic zone III.

1.5 SUBMITTALS

A. Vendor's drawings must show complete fabrication detail, material used, and include complete welding details showing location, size, and type of vessel weld seams and attachment welds. Drawing shall show Equipment Number, IT Purchase Order Number, and Shipping Weight. All nozzles to be identified on drawing by letter.

B. ASTM Number or ASME material specification, as appropriate, must be shown on vendor's drawings for all material such as shell, head, nozzle necks, flanges, studs, nuts, etc.

C. Vendor shall provide complete detailed design calculations on 8 1/2 inch by 11 inch sheets. Calculations shall be provided for each complete vessel/tank and all attachments. (Standard items such as ANSI flanges are excluded.)

D. Vendor to submit welding procedures and weld qualification procedures with approval drawings.

E. Miscellaneous: All reports, calculations, correspondence, etc., shall show Equipment Number and IT Purchase Order Number. Vendor's drawings for approval submittal date, and equipment delivery date, must be completed by the date specified on the order, unless specifically agreed otherwise.

F. Quotations: All quotations shall include thickness of materials used, and shall be based on type materials specified. Alternates or substitutions must have written approval of IT.

G. For all ASME vessels, vendor shall provide all code forms. Vendor shall provide all other data reports, including mill test reports, material identification sketch as per UG-77, weld rod information, weld procedures, and weld qualification procedures.

1.6 QUALITY ASSURANCE

A. All workmanship shall be in accordance with and equal to the best modern metal shop practices as recognized within the industry.

B. Vendor shall provide all quality control procedures, inspections, and testing to the extent necessary to assure that all work is performed in accordance with this specification.

1.7 DELIVERY, STORAGE, AND HANDLING

A. Vendor to protect all openings for shipment with wood or hardboard secured with light bolts. These covers shall be protected from the weather with tape around edges. Couplings shall be plugged with metal plugs.

B. Vendor shall utilize sufficient means of separation between the parts and materials along with adequate tie-downs so as to prevent unnecessary distortion or marring of components during the shipping process.

C. Properly reported shortages upon delivery at the job site must be replaced by the vendor at no additional cost.

D. Before shipment, vendor shall prepare and paint all surfaces of all parts and materials, except where noted on the drawings. This shall be done in accordance with the paint specification Section 09900 - Painting, number of coats, along with type and color of paint shall be as specified on the drawings.

E. No parts or materials shall be loaded and/or shipped until paint coating has thoroughly dried or cured.

PART 2 PRODUCTS

2.1 PRODUCTS

A. Minimum thickness of nozzle necks (without corrosion allowance) unless specified otherwise, shall be not less than standard wall for ALL openings.

B. Vendor to install all studs (bolts are not permitted on flanged connections), nuts and NEW gaskets for all completed connections. New gaskets shall be installed in place after hydro test.

C. All bolt holes to straddle vessel natural centerlines unless noted otherwise.

D. All welding must be as detailed on drawings approved by IT. All butt joints must be full penetration welds. All attachment welds must be continuous; no staggered welds are acceptable. All nozzle joints must be welded both inside and outside, unless noted otherwise.

2.2 MATERIALS

A. Minimum Thickness of Plate: In no case shall the nominal thickness of plate (excluding corrosion allowance) be less than (a) 1/4 inch for carbon steel or (b) 3/16 inch for 316 stainless steel, thickness for other materials shall be determined by design and applicable codes.

B. The vessel, support lugs, saddles, legs, etc. shall be designed in accordance with acceptable engineering practices and applicable codes. Vendor shall indicate compliance by providing appropriate design calculations and basis for design.

C. All threaded studs, nuts etc. shall be coated with "Molycote" or equal.

2.3 FABRICATION

A. All nozzle projections to be 6 inches unless otherwise shown. All bottom nozzles shall be flush on inside, unless noted otherwise.

B. Provide lifting lugs for handling, unless noted otherwise

C. Weld backing strips shall not be acceptable unless specified otherwise.

D. Whenever practical, threaded connections on vessels should be avoided. If a threaded connection is to be used, use an internally threaded connection no smaller than 1 inch IPS. The threaded connection shall be a 3000 lb steel coupling or boss of similar proportions to a 3000 lb coupling, welded to the vessel. External threaded nipples are not acceptable.

E. Surface preparation and painting shall meet Section 09900 - Painting

F. Any method selected by vendor for cutting is suitable as long as cut edge is smooth, uniform, and clean from any burrs, sharp edges, or foreign deposits. Cut surfaces shall be within the acceptable tolerances for straightness and roughness as specified by ANSI B46.1.

G. Where possible and practical, sizing and arrangement of plates utilized shall be selected so as to reduce the quantity and distortion of joint or seam welding.

H. The following minimum requirements shall be maintained in the orientation and placement of assembly seams:
   1. All seams shall be located so as to clear or minimize the impact with nozzle openings, reinforcing pads, and internally placed supports or components.
   2. Joints in horizontal vessels and ducts shall not be located coincident with or across saddle supports.
   3. Where attachment welds are within two shell plate thicknesses of a seam, the weld shall be ground flush and inspected before welding on the attachment.

I. Shells rolled to required contours shall have no flat sections at the end of the plate where started or ended in the rolls. All plates shall be prepared for

welding as per AWS D1.1 Section 3, and shall have all edges prepared for the appropriate weld joint configuration.

J. All forming, rolling and bending shall be done by use of pressure tools, and not by percussion blows. All bends shall be free of fractures and excessive thinning.

K. Splicing of plates, sheets, bars, and shapes to form larger or longer material sizes shall be permissible within certain limitations. Splices shall be kept to a reasonable minimum, with joints continuously welded with full penetration so that the splice shall develop full section strength. The finished spliced components shall be free of any distortion or misalignment and within the tolerance for straightness as specified for original materials.

L. Splicing of angle and pipe shapes will not be permissible, except where specifically noted and approved on the detail drawings.

M. In order to limit the amount of distortion when fabricating tank bottoms or cones, the number of plates used shall be kept to a minimum and of nearly equal width.

N. The curvature of any reinforcing pad shall follow the curvature of the vessel or duct so as that the maximum gap at any point shall not exceed 1/16" (1.5 mm). Where required, appropriate sized weep holes shall be provided in the reinforcing pad.

O. Nozzles and their flange faces shall be square with the nozzle centerline and bolting holes straddle natural centerlines. Fabricated nozzle flanges shall have smooth flat faces and be in accordance with the ANSI B16.5 standard for dimensions and arrangement for their specified size and rating.

P. All machining, milling, planing, threading, tapping, and etc., shall be done in accordance with the dimensions and/or notations on the detail drawings, and within the standards so recognized by the applicable regulatory codes governing such work.

2.4 LABELING

A. All equipment must bear manufacturer's nameplate showing maximum design conditions and manufacturer's serial number.

PART 3 EXECUTION

3.1 ERECTION

A. All parts, pieces, or members that must be handled separately during field erection shall be marked with an identifying part number as an exact indication of their position in the assembly or structure.

3.2 WELDING

A. All welding and preparation for such shall be in full accordance with the latest edition or revision of the American Welding Society "Structural Welding Code D1.1" and ASME BPUC.

B. Only competent welders fully capable and pre-qualified of performing required welding shall be used. Vendor to submit qualification certificates for any or all welders utilized for work governed by this specification.

C. Adequate precautions and methods for minimizing distortion implied by welding of flame cutting must be utilized at all times. Welding, applied for the purpose of relieving stresses and distortion, shall be totally removed by grinding.

D. Weld metal shall not be used to build up the edges of plates that are too short or contain large cavities without written approval from IT.

3.3 INSPECTION, TESTING, AND TRIAL ASSEMBLY

A. All components will be inspected for proper dimensions, configuration, completeness, and adherence to fabrication tolerances. All weld profiles will be 100% visually inspected against defects or deficiencies in accordance to sections 3 or 8 of the AWS D1.1 specification. Additional random mechanical and/or non-destructive tests as per section 6 of the AWS D1.1 specification may be made as required, or stipulated by the vendor's own Quality Assurance Program. IT reserves the right to require the testing of any designated weld.

B. Approval by IT's authorized inspector, or waiver of shop inspection by IT, shall not relieve the vendor of the responsibility for furnishing materials and workmanship in accordance with this specification and all other Purchase Documents, nor shall it relieve the vendor of making his own inspections or tests to certify such.

C. When specifically specified in the Purchase Documents, a complete shop trial assembly shall be required. The specified parts shall be assembled in an upright position, sufficiently bolted and match marked in a clear and distinct method so as to assure for proper alignment and re-assembly during field erection.

D. Hydrostatic or pressure testing may be required of certain components. If a requirement, the procedure and limits will be completely defined within the Purchase Documents.

-End of Section-

SECTION 13203

FIBERGLASS REINFORCED THERMOSET PLASTIC CUSTOM FABRICATED EQUIPMENT SPECIFICATION

PART 1 GENERAL

1.1 SECTION INCLUDES

A. This specification includes all types of fiberglass reinforced thermoset plastic custom fabricated equipment produced by hand lay up, filament winding, or modified methods of construction involving either or both of the foregoing.

B. Deviations from this specification must be identified at the time of inquiry and quotation. After the quotation is made, all points of deviation are to be clearly defined in writing and agreed to by IT and Seller.

C. All clarifications on any points of deviation must be clearly understood by both IT and Seller and put in writing in order to give equal consideration to all quotations.

D. It may be necessary for vendors to furnish some design details at the time of quotation to evaluate their quotation.

Typical items required with quotation include: equipment dimensions, equipment capacity, erection weight, material specifications, fabrication thicknesses, unit prices for (installed) nozzles and airways, separate pricing for testing of physical properties of laminate cut-outs.

1.2 RELATED SECTIONS

Section 09900 - Painting

1.3 REFERENCES, CODES AND STANDARDS

A. ASTM 2563 Level II - Liners
B. ASTM 2563 Level III - Structure
C. ASTM D3299-74 - Tolerances
D. PS 15-69 - Tolerances
E. ASTM E-84 - Tunnel test Fire Retardancy/Smoke
F. ANSI B16.5 - Flanges

1.4 SUBMITTALS

A. Drawings

1. It will be the Seller's responsibility to furnish a complete set of detail drawings for approval upon receipt of the order based on the design criteria specified by IT. The following items are to be included on fabrication drawings submitted to IT for approval:
   a. Name of Customer
   b. Equipment Number and Name
   c. Purchase Order Number
   d. Weights (empty, operating, full of water)
   e. Capacity
   f. Thicknesses (shells, heads, etc.)
   g. Overall length or height
   h. Location, dimension, and detail of all seams, nozzles, and manways
   i. Detail of lifting and hold-down lugs and all other attachments
   j. Design and operating conditions
   k. Material specifications
   l. Laminated description
   m. Fabrication tolerances
   n. Nameplate information.

2. The drawings must show all materials of construction.

3. The drawing must show a cross section giving the sequence and detail of each layer of the laminate buildup. Each layer must be identified with detail materials specifications. This information is necessary as a permanent record so the vessel may be properly maintained in the future.

EXAMPLE

<u>Typical Laminate Sequence</u>

V = 20 Mil Nexus
M = 43 Mil 1½ Oz/Ft^2 Type "E" Glass Mat
R = 33 Mil 24 Oz/Yd^2 Type "E" Glass Woven Roving
E = 43 Mil 1½ Oz/Ft^2 Type "E" Glass Mat Exotherm Layer
U = Gel Coat

Thk	Liner				Structural															Ext
¼"	V	M	M	M	M	R	M													U
⅜"	V	M	M	M	M	R	M	R	M	R										U
½"	V	M	M	M	M	R	M	R	M	R	E	M	R	M						U
⅝"	V	M	M	M	M	R	M	R	M	R	E	M	R	M	R	M	R			U

B. Calculations
   1. The Seller is required to furnish a complete set of design calculations for IT approval.
   2. The design shall be based on a minimum safety factor of 10 to 1 for pressure and 5 to 1 for vacuum unless otherwise specified.

C. Review
   1. IT will review the drawings and the design calculations for approval prior to the start of fabrication.
   2. The approval of drawings will not relieve the Seller of any responsibility of design or fabrication for equipment.
   3. Manufacturer's current printed product description, material safety data sheets (MSDS) and technical data sheets for each coating system.

1.5 PACKAGING, SHIPPING, AND HANDLING

A. It shall be the Seller's responsibility to assure that the equipment is loaded and secured using sufficient packing, blocking, and tie down as may be required to prevent damage during transit.

B. An inspection will be made by IT for any obvious transit damage prior to unloading.

C. After loading, the Seller will stencil on the surface of the vessel in several conspicuous places in at least 2-inch high letters:

PLASTIC - HANDLE WITH CARE
FOLLOW ALL HANDLING AND
INSTALLATION INSTRUCTIONS

D. The Seller will attach all of the recommended unloading and handling instructions to the equipment. These instructions are to be read and adhered to by all those handling this equipment.

PART 2 PRODUCTS

2.1 PRODUCTS/CONSTRUCTION

A. All interior surfaces exposed to the process environment shall be constructed of two resin-rich layers of "C" glass veil, or other type surfacing veil if specified, as the exposed surface, followed by two layers of chopped strand mat.

B. Where process fluids attack glass, synthetic surfacing veil such as Nexus or Dynel shall be used. Some services which warrant synthetic veil are: fluorine, fluorides, hydrofluoric acid, sodium hypochlorite, wet chlorine, chlorine dioxide, chlorinated brine, hydrochloric acid, and sodium hydroxide.

C. Construction described in Section 2.1.A shall also apply to flange faces and to all surfaces of internal components such as dip pipes, baffles, etc.

D. All exterior surfaces shall be a minimum of one layer of chopped strand mat followed by one resin-rich layer of "C" glass veil, Nexus, or other type surfacing veil if specified, as the exposed surface liner. The liner shall be fabricated per ASTM 2563 Level II and the structure per ASTM 2563 Level III.

E. In order to ensure that all glass fibers are adequately covered, all surfaces shall contain sufficient resin to present a smooth appearance.

F. All hold-down and lifting lugs shall be reinforced plastic.

2.2 MECHANICAL PROPERTIES

A. The minimum acceptable mechanical properties are:

Flexural Modulus	=	1.0×10^6 PSI
Flexural Strength	=	22,000 PSI
Tensile Modulus	=	1.5×10^6 PSI
Tensile Strength	=	15,000 PSI

B. It will be the Seller's responsibility to use the reinforcing system that will produce the desired laminate strength with the acceptable types of glass reinforcing.

2.3 FABRICATION

A. All cutouts to be marked and kept for inspection by IT or its representatives.

B. All angles that are used as stiffeners must be sandblasted before they are overlaid.

C. All stiffeners must be overlaid on equipment before the mold is pulled.

D. All edges and bolt holes must be resin coated. No exposed glass is permitted.

E. All gaskets used must be one piece and have a durometer of 60 ±5. Material type neoprene or equal.

F. All internal sub-assemblies and overlays must have a corrosion liner on both sides.

G. The fabricator is responsible for proper secondary bonding procedure. The fabricator shall present detail drawings on secondary laminates.

H. All thicknesses shown are minimum.

I. Liner must be cured before structural layers are overlaid.

J. For hand lay-up method, if the structural thickness exceeds ⅜", there must be an exotherm layer added to the structural layer.

K. No more than 4 hours' interruption is allowed between liner and structural, or during exotherm.

L. All outside corners on flanges and equipments must have a minimum of 1" radius.

M. All flange projections to be 6" from inside unless otherwise noted.

N. Minimum corrosion liner thickness is 130 Mil.

O. Any deviation from the specification shall be documented by the Supplier and submitted to IT for approval.

2.4 MATERIAL

A. The resin used shall be of a commercial grade and shall be evaluated as a laminate by test or previous service to be acceptable for the environment.

B. The resin used in the laminate shall be mixed according to the resin manufacturer's instructions.

C. The complete vessel shall be fabricated with the same resin system throughout unless otherwise specified.

D. All resins have an inherent flame retarding ability. In some instances, this can be enhanced by the addition of Antimony Trioxide to the resin formulation. IT policy will aim at using only those resins or formulations with a flame spread rating of 25 or less. This rating is to be determined by the ASTM E-84 Tunnel test. Where chemical environment dictates, the use of a resin with a higher flame-spread rating application must be made to the Corporate Safety Department for approval. In no case shall a resin with a flame-spread rating higher than 80 be used.

E. Resins included in this standard shall have a smoke development rating no greater than 50 per ASTM E-84. Where additional post-fabrication curing is required to obtain said rating, it shall be performed by the fabricator in strict accordance with the resin manufacturer's instructions.

F. The resins used shall not contain fillers except as required for viscosity control or fire retardance. Up to 4 percent by weight of thixotropic agent, which will not interfere with visual inspection, may be added to the resin for viscosity control.

G. A heavily thixotropic thickened resin putty may be used to seal cut ends of joints and to fill voids in fabricated joints only. Antimony compounds or other fire retardant agents (up to 5 percent) may be added for improved fire resistance.

H. Ultraviolet inhibitors shall be incorporated in the final top coat to prevent surface degradation. The amount of stabilizer shall be as per the resin manufacturer's current recommendations.

I. Reinforced plastic equipment shall not be pigmented, painted, or dyed unless specified in the purchase specification. When pigmentation is specified, the pigment shall be dispersed in the resin used for the finish coat of the laminate. This cover coat shall be applied following equipment inspection.

2.5 GLASS REINFORCING

A. The chemical surfacing veil shall be Type C glass monofilament surfacing mat, having a coupling agent which will provide a suitable bond between the glass reinforcement and the resin.

B. Where the process fluids attack glass, synthetic surfacing veil such as Dynel organic shall be used.

C. Glass mat, cloth, roving or continuous filament may be used as reinforcing agents. All glass reinforcement shall be a commercial grade having a coupling

agent which will provide a compatible bond between the glass reinforcement and the resin.

2.6 FLANGES

A. All flanges must be shown in detail and drilling shall be of 150 psi ANSI Spec. No. B 16.5 design unless otherwise specified.

B. The flanges may be constructed by hand lay up. No fab mat shall be used in fabrication of flanges.

C. All nozzles and flanges except on manholes and handholes, unless otherwise specified, shall have conical or plate gussets.

D. Proprietary design flanges, nozzles and gussets may be accepted upon purchaser's approval.

E. Manufacturer must show torque values on drawings to be used on all flange bolting.

F. Full-face gaskets will be used on all flanges.

G. All flange bolt holes shall be back-spot faced for standard flat washers.

H. All mating flanges or flange covers shall be match or template drilled.

I. All edges and bolt holes shall be resin coated. No exposed glass is permitted.

2.7 LABELS AND NAMEPLATE LOCATION

A. Vertical Vessels - Nameplate to be located on shell approximately 12 inches above shell manway. The nameplate will be embedded in the exterior surface of the shell and will have a gel coat of resin to protect from corrosion. It can be made of either paper or stainless steel sheet but must be clearly visible.

B. Horizontal Vessels - To be embedded in center of one of the heads. The nameplate will be embedded in the exterior surface of the shell and will have a gel coat of resin to protect from corrosion. It can be made of either paper or stainless steel sheet but must be clearly visible.

PART 3 EXECUTION

3.1 INSPECTIONS

A. Inspections that IT deems necessary will be made at the following times:

1. During fabrication at Seller's shop.
2. After fabrication at Seller's shop.
3. Upon receipt at IT facilities.
4. After installation at job site.

B. Inspections will cover the following areas:
1. Workmanship.
2. Materials of construction.
3. Transit damage.
4. Handling damage.

C. Inspection conditions.
1. In the inspection area at the fabricator's plant, lights of sufficient intensity will be provided to permit the inspector full view through the laminate. This is to include both general area lighting and portable hand lights.
2. The surfaces of the laminate must be clean and free of all foreign materials to permit the inspector full view of the surfaces.
3. The inspector must have complete access to the entire piece or pieces of equipment.
4. The vendor will furnish a qualified person to assist and accompany the IT inspector during the entire inspection.

D. Acceptance of the equipment will be based on the following areas:
1. Star Crazing Areas: Allowable limits - none, unless they have been ground out and overlaid by sufficient thickness.
2. Pits: Allowable limits - not over 2 pits in any square foot of surface. Pits must be less than 1/8-inch diameter and not over 1/32-inch deep. If either limit on the number or size of pits is exceeded, a suitable repair or repairs must be made.
3. Air Entrainment - None in the "C" veil glass. Any other location in laminate must not exceed 1/2-inch diameter in size.
4. Dry Spots:
   a. Areas deep in the laminate cannot exceed 3/4-inch diameter.
   b. Both interior and exterior veil surfaces must be free of dry spots.
5. Must meet the required physical properties of the laminate.
6. Required Barcol hardness must be met in 80 percent of the readings and must be acceptable on the test for tackiness. Barcol hardness readings must be 90 percent of the resin manufacturer's minimum hardness requirements. A minimum of 30 readings will be taken, location to be at inspector's discretion.
7. Tolerances and Dimensions - As specified by Seller and approved by IT.
8. Surfaces - Exterior and interior surfaces will be resin rich and will be reinforced with "C" Veil or synthetic surfacing veil as approved by Buyer. Other reinforcing may be used if IT approves or specifies.
9. Glass Fibers - Exposed glass fibers on the surface will not be acceptable.
10. Imbedded Particles - Allowable limits - None.

3.2 SAMPLING

A. Cutouts of the laminate where openings have been made in the equipment will be used for testing the properties of the laminates. If no cutouts are made in the equipment, the Seller will be required to furnish three 12-inch by 12-inch test pieces of the exact laminate using part of the resin mix used in the fabrication. The thickness will be the same as the said piece of equipment.

B. All cutouts and test pieces will be shipped with the equipment to IT for testing of the laminate. All cutouts will be clearly marked as to where they were cut from. Failure of test pieces to meet physical requirements is cause for rejection of the equipment.

C. Cutouts shall be identified with purchase order number, equipment number, vendor, date of manufacture and resin system used.

3.3 TOLERANCES

A. Tolerances for dimensions will be as specified in PS15-69 and/or ASTM D3299-74.

B. Any exceptions to the above tolerances must be specified in detail and shown on all drawings.

3.4 SURFACE HARDNESS CURE

A. The surface hardness on exterior and interior, when taken with a Barcol Hardness Tester, must meet 90 percent of the resin manufacturer's minimum cured hardness.

B. The cure will be checked for tackiness of the surface after being wiped with a cloth dampened with acetone.

C. It may be necessary to post-cure as recommended by the resin manufacturer in order to meet the required Barcol hardness.

-End of Section-

SECTION 13400

WASTEWATER TREATMENT SYSTEM (WTS)

PART 1 GENERAL

1.1 SECTION INCLUDES

A. Wastewater treatment system (WTS) for treatment of wastewater prior to discharge to the BSL for final treatment by the 400-gpm treatment train in the AWWT.

1.2 RELATED SECTIONS

A. Section 09900 - Painting

B. Section 13200 - General Tanks and Vessels

C. Section 13310 - Noise Level Specification

D. Section 15050 - Piping and Accessories

E. Section 15080 - Piping Specialties

F. Section 15150 - Pumps

G. Section 15170 - Motors

H. Section 15250 - Insulation

I. Division 16 - Electrical.

1.3 REFERENCES

NONE

1.4 SYSTEM DESCRIPTION

A. Design Requirements

1. The WTS will be required to treat a wastewater stream that is a combination of water from various project operations to levels within the waste acceptance criteria (WAC) for discharge to the BSL.

2. The system will be sized to handle 250 gpm and will be operated as needed to facilitate site water management.

1.5 SUBMITTALS FOR REVIEW

A. Product Data: Provide data on all components of the WTS including size, material of construction, capacity, etc. in the form of specification sheets and manufacturer literature.

B. Shop Drawings: Equipment drawings indicating general construction, dimensions, process connections, etc. WTS layout drawings indicating plan view and elevations.

C. Design Calculations: For equipment sizing.

D. Manufacturer's Installation Instructions: for instruments and equipment where applicable.

1.6 REGULATORY REQUIREMENTS

A. Conform to applicable codes.

PART 2 PRODUCTS

2.1 PERFORMANCE

A. Functional Equipment Specifications

Influent Tank (T-6501)

Fluid:	Untreated water with uranium and high TSS
Working Volume:	5, 000 gallons
Top:	Open
Bottom:	Flat or cone
Material of Construction:	Carbon steel with internal epoxy coating or FRP

Clarifier Feed Pump (P-6501)

Type:	Horizontal centrifugal
Service:	Transfer wastewater from influent tank to clarifier
Specific Gravity:	1.0
Material of Construction:	Cast iron
Capacity:	250 gpm

Caustic Metering Pump (P-6502)

Type:	Metering pump
Service:	Meter 20 % sodium hydroxide solution to neutralization tank
Specific Gravity:	1.22
Material of Construction:	
Capacity:	0 - 30 gph

Static Mixer (M-6501)

Fluids:	20% caustic and untreated water with uranium and high TSS
Size:	
Material of Construction:	PVC

Flash Mix Tank (T-6502)

Fluid:	Untreated water with uranium, high TSS, coagulant & polymer
Working Volume:	
Top:	Open
Bottom:	Flat
Material of Construction:	Carbon steel with internal epoxy coating

Flash Mixer (M-6502)

Fluid:	Untreated water with uranium, high TSS, coagulant & polymer
Tank Dimensions:	
Material of Construction:	316 stainless steel

Flocculation Tank (T-6503)

Fluid:	Untreated water with uranium, high TSS, coagulant & polymer
Working Volume:	
Top:	Open
Bottom:	Flat
Material of Construction:	Carbon steel with internal epoxy coating

Flocculation Mixer (M-6503)

Fluid:	Untreated water with uranium, high TSS, coagulant & polymer
Tank Dimensions:	
Material of Construction:	316 stainless steel

Inclined Plate Clarifier (T-6504)

Type:	Gravity plate
Fluid:	Untreated water and sludge
Settling area:	
Top:	Open
Material of Construction:	Carbon steel with internal epoxy coating

Clarifier Sludge Pump (P-6503)

Type:	Progressive cavity
Service:	Transfer sludge from clarifier to sludge holding tank
Specific Gravity:	1.5
Material of Construction:	Cast iron
Capacity:	100 gpm

Coagulant Feed Tank (T-6505)

Fluid:	37 % ferric chloride solution or other coagulant
Working Volume:	500 gallons
Top:	Closed
Bottom:	Flat
Material of Construction:	FRP or HDPE

Coagulant Mixer (M-6504)

Fluid:	37 % ferric chloride solution or other coagulant
Tank Dimensions:	
Material of Construction:	316 stainless steel

Coagulant Feed Pump (P-6504)

Type:	Metering pump
Service:	Meter 37 % ferric chloride solution (or other coagulant) to flash mix tank
Specific Gravity:	1.1
Material of Construction:	
Capacity:	0 - 30 gph

Polymer Feed Tank (T-6506)

Fluid:	Polymer
Working Volume:	500 gallons
Top:	Closed
Bottom:	Flat
Material of Construction:	FRP or HDPE

Polymer Mixer (M-6505)

Fluid:	Polymer
Tank Dimensions:	
Material of Construction:	316 stainless steel

Polymer Feed Pump (P-6505)

Type:	Metering pump
Service:	Meter polymer solution to flash mix tank
Specific Gravity:	
Material of Construction:	
Capacity:	0 - 5 gph

Sludge Holding Tank (T-6507)

Fluid:	Sludge from clarifier
Working Volume:	5,000 gallons
Top:	Open
Bottom:	Cone
Material of Construction:	Carbon steel

Sludge Transfer Pump (P-6506)

Type:	Progressive cavity
Service:	Transfer sludge from sludge holding tank
Specific Gravity:	1.5
Material of Construction:	Cast iron
Capacity:	100 gpm

Clarifier Overflow Tank (T-6508)

Fluid:	Water with uranium
Working Volume:	5,000 gallons
Top:	Open
Bottom:	Flat
Material of Construction:	HDPE, FRP or carbon steel

Filter Feed Pump (P-6507)

Type:	Horizontal centrifugal
Service:	Transfer water from clarifier overflow tank through sand filter and ion exchange unit or directly to effluent tank
Specific Gravity:	1.0
Material of Construction:	Cast iron
Capacity:	250 gpm

Sand Filter (F-6501)

Fluid:	Clarified water containing minimal TSS and uranium
Flow Rate:	250 gpm
Dimensions:	8 feet diameter
Material of Construction:	Carbon steel
Filter Media:	Sand and gravel

Ion Exchange Unit (F-6502)

Fluid:	Clarified water containing uranium
Flow rate:	250 gpm
Dimensions:	8 feet diameter
Material of Construction:	Carbon steel
Media:	Dowex 21K XLT anion resin

Effluent Tank (T-6509)

Fluid:	Treated water
Working Volume:	5, 000 gallons
Top:	Open
Bottom:	Flat
Material of Construction:	Carbon steel with internal epoxy coating

Effluent Pump (P-6508)

Type:	Centrifugal
Service:	Discharge treated water to BSL or backwash filters
Specific Gravity:	1.0
Material of Construction:	Cast iron
Capacity:	500 gpm

Acid Metering Pump (P-6509)

Type:	Metering pump
Service:	Meter acid solution to water stream entering effluent tank
Specific Gravity:	1.22
Material of Construction:	
Capacity:	0 - 30 gph

WTS Sump Pump (P-6510)

Type:	Submersible sump pump
Service:	Pump storm water from WTS sump to influent tank
Specific Gravity:	1.0
Material of Construction:	Cast iron
Capacity:	20 gpm

PART 3 EXECUTION

3.1 INSTALLATION

A. Install in accordance with manufacturers' instructions and design drawings.

-End of Section-

SECTION 15080

PIPING SPECIALTIES

PART 1 GENERAL

1.1 SECTION INCLUDES

A. This specification establishes the requirements for selection of piping specialties

B. Piping specialties shall be selected in accordance with codes, drawings, job specifications, and other specific requirements.

1.2 RELATED SECTIONS

A. Section 09900 - Painting General
B. Section 15050 - Piping and Accessories
C. Section 15250 - Insulation
D. Section 16850 - Electrical Heat Tracing for Freeze Protection

1.3 REFERENCES

A. American Society of Mechanical Engineers (ASME)
   1. ASME A13.1 Scheme for the Identification of Piping Systems.
   2. ASME B16.5 Pipe Flanges and Flanged Fittings.
   3. ASME B31.3 Chemical Plant and Petroleum Refinery Piping.
   4. ASME Boiler and Pressure Vessel Code (BPVC), Section IX.

B. American Society for Nondestructive Testing (ASNT)
   1. ASNT-SNT-TC-1A Recommended Practice, December 1992 Edition.

C. American Society for Testing and Materials (ASTM)

D. American Welding Society (AWS)

E. American National Standards Institute (ANSI)
   1. ANSI B31.3 - Chemical Plant and Petroleum Refinery Piping.

1.4 SUBMITTALS

A. Submit manufacturer's installation instructions, Product Data, and Shop Drawings

B. Submit manufacturer's descriptive literature, operating instructions, and maintenance and repair data.

C. Certificates of Conformance: Manufacturer shall certify and provide data which indicates that all supplied products meet or exceed specification requirements.

D. Test Procedures: Submit written procedures for all required testing. Test procedures shall include criteria for acceptable performance.

E. Detailed description of packaging materials and procedures including cleaning and closure of all openings.

F. Procedure for repair or replacement of piping failing pressure tests. Including flushing procedures.

G. Welder qualification, inspector qualifications, procedure qualification records, and welding procedure specification in accordance with the ASME BPVC, Section IX.

H. Pressure test reports.

1.6 QUALITY ASSURANCE

A. Except where more stringent requirements are specified or indicated, the work shall conform to ASME B31.3.

B. Welding procedures and Qualifications
   1. Welding procedures, welder qualifications, fabrication, assembly, and erection shall be in accordance with ASME B31.3, Chapter V and ASME BPVC, Section IX.
   2. Nondestructive testing personnel qualifications shall be in accordance with ASNT SNT-TC-1A.

1.7 DELIVERY, STORAGE, AND HANDLING

A. Packaging
   1. Packaging shall conform to acceptable industrial practices. Materials shall be cleaned to remove chips, slag, weld spatter, oil, grease, debris, and other foreign matter prior to packaging for shipment.

B. Shipment and Delivery
   1. Return defective or damaged parts to Supplier for repair or replacement so that schedule of this portion of work is not impaired.

2. Identify all documents certifying quality and compliance with Specifications and deliver to Contractor.

C. Storage
1. Store items in dry, clean areas, safe from damage.
2. Maintain condition of all storage areas while items are stored.
3. Store small items and loose materials in clearly labeled, neatly arranged bins.
4. Store equipment and specialties in safe, clean, dry areas with open ends and pipe connection points covered until removed for installation.

D. Handling
1. Unload, unpack, and handle items with extreme care; use slings, cradles, or other appropriate appurtenances.
2. Transport all items as required from unloading point to storage or installation location; protect components from damage during transportation.
3. Handle items in accordance with special instructions of Manufacturer or Supplier.
4. Replace parts damaged during transportation and handling at no additional cost to Owner so that schedule of this portion of work is not impaired.
5. Protect painted and machined surface where exposed.

PART 2 PRODUCTS

2.1 STRAINERS

A. Temporary strainers are to be installed ahead of control valves, meters, traps, and the suction side of pumps before testing. Their presence shall be indicated by tags or other visual means. They are to be removed at the direction of the IT representative.

B. Typical strainer construction is shown in Figure 1. Substitution of other configurations shall be approved by the IT representative.

C. Temporary strainers are not to be installed where permanent basket-type strainers are indicated on the Piping and Instrument Diagrams or before sludge pumps. Permanent basket-type strainers are designated as equipment items.

	A				* Length			
Size	150*	300*	600*	B	C	D	E	F
1-1/2	3-1/8	3-3/8	3-1/2	1-1/2	1-1/2	2	3	4
2	4	4-1/4	4-1/4	1-1/4	2	4-1/2	6	4-1/4

Size	A			B	* Length			F
	150*	300*	600*		C	D	E	
3	5-1/4	5-1/4	5-1/4	2-1/4	3	6-1/2	9-1/4	5-5/8
4	6-1/4	7	7-1/8	3-5/8	4	8	11-1/2	7
6	8-5/8	9-1/4	10-1/4	5-5/8	6	8	17	7-1/4
8	10-7/8	12	12-3/8	7-1/2	8	14	22	9
10	13-1/4	14-1/8	15-1/2	9-1/8	10	14	27	10-1/4
12	16	16-1/2	17-1/4	11-1/4	12	16	32-1/2	11¼

*C - Short D- Standard E - Long

Figure 1

Temporary Pipeline Strainer for Startup of New Process Equipment

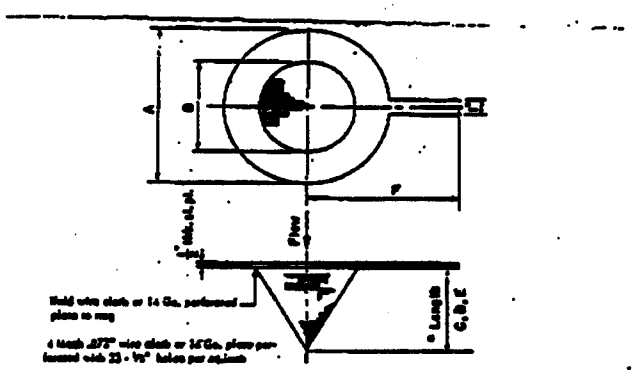

2.2 FLEXIBLE COUPLINGS, EXPANSION JOINTS, AND BELLOWS

A. Flexible couplings, expansion joints, and bellows are specially selected or designed pieces of pipe, which are inserted into a piping system to:

- Absorb or permit movements in the system
- Reduce noise
- Isolate mechanical vibration

- Compensate for misalignment
- Isolate dissimilar metals.

B. The use and selection of flexible couplings, expansion joints, and/or bellows shall be at the discretion of the piping designer in conjunction with the IT representative and, if necessary, a vendor applications engineer.

C. The following data are necessary for specifying:

- Flowing medium
- Pressure - working, test
- Temperature - maximum installation
- End connections:
  - Welded ends - size, schedule, and material
  - Flanged ends - size, ANSI rating and facing, and material
- Design movements - axial compression (hot) or expansion (cold) lateral deflection
- List additional features if desired:
  - Internal sleeve - high velocity, temperature, etc.
  - Lifting lugs - above 500 pounds
  - External covers - protect bellows or to permit joint insulation.

D. Typical vendors are: Garlock, Inc., Resistoflex Corporation, and John L. Dore Company.

2.3 FLAME ARRESTERS, CONSERVATION VENTS, AND BREATHER VENTS

A. Combination pressure/vacuum relief vents and flame arresters shall be specified and sized by the contractor, or his designee, for the following services:

- Protectoseal Series 830 or equal constructed of stainless-steel 316 (housing, arrester plates, trim, nuts and bolts, etc.) for tank filling/emptying

- Normal operation to act as vent valve relieving nitrogen vapor blanket gas during tank filling (set at 3.0-inch w.c.) -- and to act as a vacuum relief should there be a nitrogen system failure (set at 0.866-inch w.c. vacuum).

B. Vents with flame arresters shall be specified and sized by the contractor or his designee (to prevent over pressurization of the tank[s] due to failure of breather vent valve[s] or nitrogen system) at:

- Protectoseal 7800 (steel) (or equal) (set at 5.0-inch w.c.) with flame arrester.

2.4 TRANSFER HOSE AND HOSE FITTINGS

A. This section presents hoses in conjunction with the piping specification and services. Where conflicts or omissions exist, such as a hose rating not complying with a particular service condition or no hose specification for a particular service, etc., the conflict or omission shall be brought to the attention of the IT representative. Hoses shall be as specified in Table 1.

B. Detail design will make certain that hose ends mate to piping stub ends and be provided with the proper fittings. Unless otherwise specified, couplings for hoses 2 inches and larger shall have 150-pound lap joint flanges. Hose under 2 inches will have MNPT-screwed ends.

C. All hoses shall be purchased with end connections fixed and hydrostatically tested by the manufacturer at its recommended test pressure and temperature. A manufacturer's written and signed statement for each individual hose assembly certifying that it has been satisfactorily tested at a specific pressure and temperature shall be furnished to the IT representative. (Exception - drain hoses or vent hoses in nonhazardous service at, or near, atmospheric pressure may be "leak" tested only).

TABLE 1

Spec No.	Service	Transfer Hoses
A	No. 2 fuel oil, seal oil - 120°F, 65 psi	Flexonics Series 860; single braid or equal
B	Natural gas, propane gas, 120°F, 125 psi	Flexonics Series 860; single braid or equal
C	150 psig steam 350°F	Flexonics Series 860 and A6; single braid or equal
D	Process steam process condensate 450°F, 150 psi	Flexonics Series 860 and A6; single braid or equal
E	Nitrogen gas 350°F, 150 psi	Flexonics Series 860 and A6; singe braid or equal
F	Boiler feed water	
G	Plant air, ambient air, atomizing air 150°F, 125 psi	Flexonics Series 860 and A6; singe braid or equal
H	Potable water 100°F, 125 psi	Flexonics Series 860 and A6; singe braid or equal
I	Hydrogen peroxide	Flexonics Series 860 and A6; singe braid or equal
J	Polymer solutions	Flexonics Series 860 and A6; singe braid or equal

Spec No.	Service	Transfer Hoses
K	Cooling water	Flexonics Series 860 and A6; singe braid or equal
L	Lime	
N	DW, EW, FW, HW, SW 180°F, 125 psi	Flexonics Series 860 and A6; singe braid or equal
O	Sulfur dioxide	Flexonics Series 860 and A6; singe braid or equal
P	Instrument air 120°F, 125 psi	Flexonics Series 860 and A6; singe braid or equal
Q	Quench air, combustion air	
R	Flue gas	
S	Sump gas piping	Flexonics Series 860 and A6; singe braid or equal
T	High pressure water	Flexonics Series 860 and A6; singe braid or equal
U	Incinerator waste liquid and flue gas 210°F, 150 psi	Everflex "C" series Teflon-lined flexible 316L S.S. hose or equal
V	Dowtherm SR-1	Flexonics Series 860 and A6; single braid or equal
X	Aqueous brine solutions	Everflex "C" series Teflon-lined flexible 316L S.S. hose or equal
Y	Up to 50% caustic	Flexonics Series 860 and A6; single braid or equal
Z	Wastewater	Flexonics Series 860 and A6; single braid or equal
AA	Waste feed, slurry liquid	Everflex "C" series Teflon-lined flexible 316L S.S. hose or equal
AB	Phenolic wastes	Flexonics Series 860 and A6; single braid or equal
AC	Commodity chemicals	Flexonics Series 860 and A6; single braid or equal
AD	Waste feed, acid	Everflex "C" series Teflon-lined flexible 316L S.S. hose or equal
AF	Sludge feed, aqueous waste, burner oil, waste oil 100°F, 740 psig	Everflex "C" series Teflon-lined flexible 316L S.S. hose or equal
AG	Reactive hot tars, corrosive reactive hot tars, TDI hot tars (400°F, max)	Everflex "C" series Teflon-lined flexible 316L S.S. hose or equal
BA	Waste feed, chlorinated organics	Everflex "C" series Teflon-lined flexible 316L S.S. hose or equal
BD	Chlorinated organics	Everflex "C" series Teflon-lined flexible 316L S.S. hose or equal
BE	Chlorinated waste organics	Everflex "C" series Teflon-lined flexible 316L S.S. hose or equal

Spec No.	Service	Transfer Hoses
BP	Corrosive slurry	Everflex "C" series Teflon-lined flexible 316L S.S. hose or equal
CA	Hydraulic oil	
CC	High pressure steam, condensate	Flexonics Series 860 and A6; single braid or equal
CL	Propane	Flexonics Series 860 and A6; single braid or equal
DA	Waste feed 400°F, 160 psi	Flexonics Series 860 and A6; single braid or equal
DC	Waste feed	Flexonics Series 860 and A6; single braid or equal
EE	Nitrogen liquid	Flexonics Series 860 and A6; single braid or equal
HH	Drinking water	Flexonics Series 860 and A6; single braid or equal
UA	Wastewater UW	Flexonics Series 860 and A6; single braid or equal

2.5 SEPARATORS

A. Where specified on steam or compressed air lines, etc., separators shall have the following data supplied:

- Design pressure and temperature
- Size and type of line connections
- Material(s) of construction
- Flowing media and flow rate.

PART 3 EXECUTION

3.1 INSTALLATION

A. The Subcontractor shall ensure that all systems are internally free of dirt or foreign materials before final connection to and start-up of equipment.

B. Cap or plug the ends of, and openings in, all fittings immediately after placement to exclude all dirt until fixtures and equipment are installed. No equipment shall be concealed or covered until it has been tested and observed by the inspector who shall be notified when the work is ready for inspection. All work shall be completely installed, tested as required by this section, and the state and local codes, and shall be leaktight before inspection is requested. All tests shall be repeated upon request to the satisfaction of those making the inspection.

3.2 QUALITY CONTROL

A. Inspections and Tests

1. Unless specified elsewhere in the specifications, all piping shall be leak tested in accordance with the ASME B31.3. Process Piping Code, latest edition, paragraphs 345.4 and/or 345.5. Pressure test holding time shall be a minimum 1 hour or longer as necessary to make a complete examination of the system being tested.
2. Tests shall be conducted prior to installing heat tracing or pipe insulation.
3. All pressure vessels, equipment, in-line instruments, gauge glasses, flowmeter, and all other pressure parts of instruments shall not be included in these tests if they will be damaged by the test pressure.
4. Equipment which is not to be subjected to the pressure test shall be disconnected from the piping and a pipe spool inserted in its place, or the equipment may be isolated by way of a single line blind.

B. Hydrostatic testing

1. Potable water or other approved fluids shall be used for hydrostatic pressure testing of piping systems in accordance with ASME B31.3.
2. All test pressures shall be maintained a minimum of 1 hour during which time visual examination of joints begin.

C. Pneumatic Testing

1. Pneumatic testing can be used on certain large diameter piping/ducting.
2. Inspection of joints shall be visual with the use of soap. Pressure gauge readings shall take into account ambient temperature changes.

D. Hydrostatic/Pneumatic Test Reports

1. A report for each piping system tested shall contain the following information:
   a. Date of test
   b. Line designation number.
   c. Test fluid.
   d. Type of test.
   e. Pressure applied.
   F. Start time.
   g. Completion time.
   h. Total time at test pressure.
   I. Certification by examiner of acceptability.
   j. Calibration test gauge number and calibration date.
   k. Comments, drawings if any.

3.5 CLEANING

A. System Cleaning and Flushing

1. The interior and exterior of all items shall be kept clean at all times.
2. After erection and welding, all lines except air shall be flushed with potable water prior to leak testing or hydrostatic testing. Upon completion of flushing, lines shall be drained at all low points.

-End of Section-

SECTION 15150

PUMPS GENERAL

PART 1 GENERAL

1.1 SECTION INCLUDES

A. Gas Cleaning System Pumps

1.2 RELATED SECTIONS

A. Section 09900 - Painting General
B. Section 13310 - Noise level specification
C. Section 15170 - Motors
D. Division 16 - Electrical

1.3 REFERENCES

A. API 610 Centrifugal Pumps for General Refinery Services
B. NEMA MG 1 Motors and Generators
C. NFPA 70 National Electrical Code
D. ANSI American National Standards Institute

1.4 SYSTEM DESCRIPTION

A. Design Requirements

The gas cleaning system pumps will be used to transport liquids to and from the various gas cleaning equipment.

B. Description

The pumps shall be of the types indicated and specified. The single driving units for the pumps shall be electric motors as indicated and specified.

C. Safety Requirements

Gears, couplings, projecting set-screws, keys, and other rotating parts, so located that any person can come in close proximity thereto, shall be fully enclosed or properly guarded.

D. Nameplates

Pumps and motors shall have a standard nameplate securely affixed in a conspicuous place showing the manufacturer's name, address, type or style, model, serial number, and catalog number. In addition, the nameplate for each pump shall show the capacity in (gpm) at rated speed in rpm and head in feet of water. Nameplate for each electric motor shall show at least the minimum information required by NEMA MG 1. Such other information as the manufacturer may consider necessary to complete identification shall be shown on the nameplate.

E. Electrical Work

Electrical motor driven equipment specified herein shall be provided complete with motors, motor starters, and controls. Electric equipment and wiring shall be in accordance with Electrical Division 16. Electrical characteristics shall be as indicated. Motor starters shall be provided complete with properly sized thermal overload protection in each phase and other appurtenances necessary for the motor control specified. Each motor shall be of sufficient capacity to drive the equipment at the specified capacity without exceeding the nameplate rating of the motor when operating at proper electrical system voltage and frequency. Manual or automatic control and protective or signal devices required for the operation herein specified and any control wiring required for controls and devices but not shown on electrical plans shall be provided under this section of the specifications.

1.5 SUBMITTALS

The following shall be submitted:

A. Manufacturer's descriptive data and technical literature, performance charts and curves for all impeller sizes for a given casing, catalog cuts, and installation instructions. Spare parts data for each different item of material and equipment specified, after approval of the detail drawings and not later than 3 months prior to the date of beneficial occupancy. Data shall include a complete list of parts and supplies, with current unit prices and source of supply.

B. A complete listing of equipment and materials. Drawings containing complete wiring and schematic diagrams and any other details required to demonstrate that the system has been coordinated and will properly function as a unit. Drawings shall show proposed layout and anchorage of equipment and appurtenances, and equipment relationship to other parts of the work including clearances for maintenance and operation.

C. Proposed diagrams, instructions, and other sheets, prior to posting. Approved wiring and control diagrams showing the complete layout of the entire system,

including equipment, piping valves, and control sequence. Condensed operating instructions explaining preventive maintenance procedures, methods of checking the system for normal safe operation, and procedures for safely starting and stopping the system shall be prepared in typed form.

D. Ten complete sets of instructions containing the manufacturer's operating and maintenance instructions for each piece of equipment. Each set shall be permanently bound and shall have a hard cover. Instructions shall include, but not be limited to, the following:

1. Approved wiring and control diagrams.

2. Operating and maintenance instructions for each piece of equipment, including lubrication instructions and troubleshooting guide.

3. Manufacturer's bulletins, cuts, and descriptive data; and parts list and recommended spare parts.

1.6 DELIVERY AND STORAGE

All equipment delivered and placed in storage shall be stored with protection from the weather, humidity and temperature variations, dirt and dust, or other contaminants.

PART 2 PRODUCTS

2.1 MATERIALS AND EQUIPMENT

Materials and equipment shall be suitable for the service intended. Materials and equipment shall be new and unused, except for tests.

A. Pump Service

The pumps shall be utilized for the following service:

	Pump No.
Cooling Water Recirc Pump	P-5001
Venturi Recirc Pump	P-5002
Contact Scrubber	P-5003
Caustic Metering Pump	P-5006
Hydroclone Recirc Pump	P-5007

Spray Quench Recirc Pump	P-5008
Caustic Metering Pump	P-5009
Chiller Recirc Pump	P-5010

B. Pump Drives

The pumps shall have electric motor drives and shall be directly connected to the driving units through solid shafts or flexible couplings, as appropriate.

C. Functional Equipment Specifications

Cooling Water Recirc. Pump (P-5001)

Type:	Horizontal centrifugal
Service:	Recirculate water from Cooling Tower to the heat exchangers and chiller
Specific Gravity:	1.0
Material of Construction:	Cast iron
Capacity:	6000 gpm

Venturi Recirc. Pump (P-5002)

Type:	Horizontal centrifugal
Service:	Recirculate water from Venturi Sump to Venturi Scrubber
Specific Gravity:	1.0
Material of Construction:	
Capacity:	40 gpm

Contact Scrubber Recirc. Pump (P-5003)

Type:	Horizontal centrifugal
Service:	Recirculate water from Settling Tank to Heat Exchangers and to Contact Scrubber
Specific Gravity:	1.0
Material of Construction:	
Capacity:	600 gpm

Caustic Metering Pump (P-5006)

Type:	Metering pump
Service:	Meter 20 % sodium hydroxide solution to contact Scrubber
Specific Gravity:	1.22
Material of Construction:	

Capacity:	0 - 60 gph

Hydroclone Recirc. Pump (P-5007)

Type:	Horizontal centrifugal
Service:	Recirculate water from Settling Tank to Hydroclone
Specific Gravity:	1.0
Material of Construction:	
Capacity:	1210 gpm

Spray Quench Recirc. Pump (P-5008)

Type:	Horizontal centrifugal
Service:	Recirculate water from Settling Tank to Spray Quench
Specific Gravity:	1.0
Material of Construction:	
Capacity:	250 gpm

Caustic Metering Pump (P-5009)

Type:	Metering pump
Service:	Meter 20 % sodium hydroxide solution to Settling Tank
Specific Gravity:	1.22
Material of Construction:	
Capacity:	0 - 60 gph

Chiller Recirc. Pump (P-5010)

Type:	Horizontal centrifugal
Service:	Recirculate water from Chiller to Contact Scrubber Secondary Heat Exchanger
Specific Gravity:	1.0
Material of Construction:	Cast iron
Capacity:	350 gpm

D. Piping Connections

The pump suction and discharge shall be provided with flanged connections of suitable size and suitably arranged for piping shown. Pipe flanges shall conform to ANSI and ASME 16.5. Piping shall be installed to preclude the formation of air pockets.

E. Finish

Pump shall have painted or enameled finish as per Section 09900 or per manufacturer's standard with IT approval.

2.2 ELECTRICAL EQUIPMENT

Electrical equipment shall conform to Division 16 - Electrical. Electrical motor driven equipment herein specified shall be provided complete with motors, motor starters, and controls. Motor controls, equipment, and wiring shall be in accordance with NFPA 70.

A. Electric Motors

Each electric motor-driven pump shall be driven by a weather-protected, Type I or II totally-enclosed fan cooled continuous-duty electric motor. Motor shall have a 1.15 service factor. Motors shall be squirrel-cage induction motors having normal-starting-torque and low-starting-current characteristics, and shall be of sufficient size so that the nameplate horsepower rating will not be exceeded throughout the entire published pump characteristic curve. Motor bearings shall provide smooth operations under the conditions encountered for the life of the motor. Adequate thrust bearing shall be provided in the motor to carry the weight of all rotating parts plus the hydraulic thrust and shall be capable of withstanding upthrust imposed during pump starting and under variable pumping head conditions specified. Motors shall be rated 480 volts, 3 phase, 60 Hz and such rating shall be stamped on the nameplate. Motors shall conform to NEMA MG 1.

B. The variable speed motor controller shall convert 460 volt plus 15 percent, minus 5 percent, three phase, 60 Hz (plus or minus 2 Hz) utility power to adjustable voltage/frequency, three phase, ac power for stepless motor control from 5 percent to 105 percent of base speed.

1. Governing Requirements

Variable speed drives shall conform to the following requirements:

a. Variable speed drive shall comply with 47 CFR 15 regulation of RF1/EM1 emission limits for Class A computing devices. The FCC label of compliance shall be displayed on the variable speed drive.

b. The variable speed drive and options shall comply with the applicable requirements and the standards of the American National Standards Institute (ANSI).

c. Variable speed drive and option design and construction thereof shall comply with all applicable provisions of NFPA 70, Article 43D, Sections A-L.

2. Service

The variable speed drive shall be supplied with the following:

a. One-year parts and labor warranty.

b. A troubleshooting guide to help the building operator determine what steps must be taken to correct any problem that may exist in the system.

3. Basic Features

The variable speed drive shall have the following basic features:

a. Hand/Off/Auto Operation.

b. Manual/Auto speed reference switch.

c. Minimum/maximum adjustable speeds.

d. Speed potentiometer.

e. Auto restart.

f. Linear timed acceleration and deceleration for soft starting/stopping.

g. 3-63 Hz controlled speed range. (Factory set at 15 Hz minimum).

h. Terminal connections for time clock control, fire, smoke, freeze detectors, and EP relay pre-set speed override.

i. Output frequency terminals for remote metering.

4. Protective Circuits and Features

The variable speed drive controller shall include the following protective circuits/features:

a. Current limits to 100 percent design by slowing down motor.

b. Instantaneous Electronic Trip - automatically shutdown motor if current exceed 120 percent of design or phase-to-phase output short circuit occurs.

c. The variable speed drive will restart automatically when input line returns to normal in the event of intermittent power outage or phase loss or overvoltage shutdown.

d. Input power protection shuts down the unit if the following faults occur; low input line voltage or loss of an input phase.

e. Insensitive to incoming power phase.

f. Fast acting current limiting input fuses, (Class J) rated with 200,000 interrupting amperes capability.

g. Isolated 120 volt control circuit and dedicated control transformer.

h. Line-to-line fault protection.

i. Line-to-ground short circuiting and accidental motor grounding protection.

j. Output thermal overload relay trip.

2.3 EQUIPMENT APPURTENANCES

A. Attachments

All necessary bolts, nuts, washers, bolt sleeves, and other types of attachments for the installation of the equipment shall be furnished with the equipment. Bolts shall conform to the requirements of ASTM A 307 and nuts shall be hexagonal of the same quality as the bolts used.

B. Equipment Guards

Equipment driven by open shafts, belts, chains, or gears shall be provided with all-metal guards enclosing the drive mechanism. Guard shall be constructed of galvanized sheet steel or galvanized woven wire or expanded metal set in a frame of galvanized steel members. Guards shall be secured in position by steel braces or straps which will permit easy removal for servicing the equipment. The guards shall conform in all respects to all applicable safety codes and regulations.

C. Shop Painting

All motors, pump casings, and similar parts of equipment customarily finished in the shop shall be thoroughly cleaned, primed, and given two finish coats of paint at the factory in accordance with the recommendations of the

manufacturer. Ferrous surfaces not to be painted shall be given a shop coat of grease or other suitable rust-resistant coating.

PART 3 EXECUTION

3.1 INSTALLATION

Each pump and engine shall be installed in accordance with the written instructions of the manufacturer.

3.2 TESTS

After installation of the pumping units and appurtenances is complete, operating tests shall be carried out to assure that the pumping installation operates properly.

3.4 MANUFACTURER'S FIELD SERVICES

The vendor shall obtain the services of a manufacturer's representative experienced in the installation, adjustment, and operation of the equipment specified. The representative shall supervise the installation, adjustment, and testing of the equipment.

- End of Section -

SECTION 15170

MOTORS, GENERAL

PART 1 GENERAL

1.1 SECTION INCLUDES

Common requirements for electric motors furnished on equipment specified in other sections.

A. Low voltage, three-phase induction motors.

B. Low voltage, single-phase induction motors.

1.2 RELATED SECTIONS

A. Division 16 - Electrical.

B. Section 09900 - Painting General.

C. Section 13310 - Noise Level Specifications.

1.3 REFERENCES

A. American Bearing Manufacturers Association (ABMA):
1. ABMA 9-90 Load Ratings and Fatigue Life for Ball Bearings.
2. ABMA 11-90 Load Ratings and Fatigue Life for Roller Bearing.

B. Institute of Electrical and Electronics Engineers (IEEE):
1. IEEE 112-91 Standard Test Procedure for Polyphase Induction Motors and Generators.

C. National Electrical Manufacturers Association (NEMA):
1. NEMA MG 1-93 Motors and Generators.
2. NEMA MG 13-84 Frame Assignments for AC Integral-Horsepower Induction Motors.

D. National Fire Protection Association (NFPA):
1. NFPA 70-96 National Electrical Code

E. Underwriters Laboratories (UL)
1. UL 674 UL Standard for Safety Electric Motors and Generators for use in Division 1 Hazardous (Classified) Locations.

2. UL 1836 — UL Standard for Safety for Electric Motors for use in Class 1, Division 2 and Class 2, Hazardous (Classified) Locations.

1.4 SYSTEM DESCRIPTION

A. Provide electric motors as required. Each motor shall be selected especially for its respective driven equipment. Each motor shall be adequate for the full range of the driven equipment's performance.

1.5 SUBMITTALS

A. Product Data: Provide data for motors, including full load amps, NEMA frame size, and additional standard nameplate data. Provide efficiency and power factor for each of 1/2, 3/4, and full load. Include catalog sheets and drawings showing voltage, ratings, impedances, normal and short circuit current ratings, dimensions, and enclosure details.

B. Operation and maintenance data. Include assembly drawings and bearing data, including replacement sizes and lubrication instructions.

C. Certificate of Conformance: Provide statement certifying that the materials supplied meet or exceed contract requirements.

D. Testing Procedures: Submit written procedures for all required testing. Test procedures shall include criteria for acceptable performance.

E. Manufacturer's Installation Instructions. Indicate application conditions and limitations of use stipulated by product testing agency. Include instructions for storage, handling, protection, examination, preparation, installation, and commissioning of products.

F. Recommended Spare Parts Lists: Provide, where applicable.

G. Submit Material Safety Data Sheets for all cutting oils, caulks, sealants, and all similar components.

H. Test Reports. Indicate satisfactory completion of required tests and inspections. Submit results verifying performance in accordance with IEEE 112.

I. Motor Data Sheets. Provide completed motor data sheet (Attachment 1) for each motor provided.

1.6 DELIVERY, STORAGE, AND PROTECTION

A. Protect motors stored on site from weather and moisture by maintenance factors covers and suitable weather-proof covering.

1.7 QUALITY ASSURANCE

A. Conform to NFPA 70 and NEMA MG1.

PART 2 PRODUCTS

2.1 MANUFACTURERS

The listing of equipment suppliers below in no way precludes the offerer from proposing alternate suppliers of any of the equipment to be furnished within the scope of this specification. This list of suppliers is intended to identify the type of equipment and general quality of that equipment that will be included in the offerer's proposal. It is the offerer's responsibility to proposed equipment that is best suited for this project in combined terms of quality and price.

A. Reliance Electric.
B. U.S. Motors.
C. General Electric.

2.2 EQUIPMENT

A. General Construction and Requirements
   1. Electrical Service: Refer to related sections of the specifications and the drawings for required characteristics.
   2. Motors: Design for continuous operation at a temperature of 40 degrees C ambient, and for temperature rise in accordance with NEMA MG 1 limits for insulation class, service factor, and motor enclosure type. Motors to be controlled by variable frequency drives shall be of a design suitable for this type of operation.
   3. Visible Nameplate: Indicating motor horsepower, voltage, phase, frequency, rpm, full load amps, locked rotor amps, frame size, manufacturer's name and model number, service factor, power factor, serial number, and bearing numbers. Nameplate shall be stainless steel, permanently attached to the motor frame.
   4. Electrical Connection: Conduit connection boxes, threaded for conduit and designed to allow for 90 degree step rotation of the conduit entrance. Oversize conduit boxes shall be provided.
   5. Motor Service Factor: Furnish motors with service factors required by table in Paragraph d. Motor size in hp shall be selected to serve the

driven equipment over its full performance range as though the service factor is 1.0.

6. Motor voltage shall be 115 V, single-phase for motors 1 hp or less. Other motors shall be 460 V, three-phase.
7. Motors drawing less than 250 W that are intended for intermittent service may be germane to equipment manufacturer and need not conform to these specifications.
8. Explosion-Proof Motors: UL approved for hazard classification.

B. Three-Phase - Squirrel Cage Induction Motors

1. Motors shall be 460 V, three-phase, 60 Hz.
2. The motor connection diagram shall be stainless steel, permanently stamped and attached to the motor either inside the conduit box or on the same side as the conduit box.
3. Starting Torque: To be matched to the driven equipment.
4. Starting Current: Not to exceed six times full-load current.
5. Power Output: Locked Rotor Torque, Breakdown or Pullout Torque: NEMA Design B characteristics or as required by the driven equipment.
6. Design, Construction, Testing, and Performance: Conform to NEMA MG 1 for Design B motors.
7. Insulation System: Non-hygroscopic NEMA Class F or better.
8. Testing Procedure: In accordance with IEEE 112, Test Method B. Load test motors to determine freedom from electrical or mechanical defects and for compliance with performance data.
9. Motor Frames: NEMA MG 13 standard T-frames of steel, aluminum, or cast iron with end brackets of cast iron or aluminum with steel inserts.
10. Bearings: Grease lubricated, anti-friction ball bearings with housings equipped with plugged provision for prelubrication, rated for minimum ABMA 9 and 11, L-10 life of 20,000 hours.
11. Sound Power Levels: To NEMA MG 1 and Section 13310.
12. Motors shall be high efficiency type.
13. Motors shall be totally enclosed fan cooled (TEFC).
14. Nominal Efficiency: Meet or exceed value in schedules as given herein at full load and rated voltage when tested in accordance with IEEE 112.
15. Nominal Power Factor: Meet or exceed values in schedules as given herein at full load and rated voltage when tested in accordance with IEEE 112.

C. Performance Schedule: Three-Phase - Energy Efficient, TEFC

HP Factor	RPM (Syn)	NEMA Frame	Minimum Percent Efficiency	Minimum Percent Power Factor
1	1200	145T	81	72

HP Factor	RPM (Syn)	NEMA Frame	Minimum Percent Efficiency	Minimum Percent Power Factor
1-1/2	1200	182T	83	65
2	1200	184T	85	68
3	1200	213T	85	63
5	1200	215T	86	66
7-1/2	1200	254T	89	68
10	1200	256T	89	75
15	1200	284T	90	72
20	1200	286T	90	76
25	1200	324T	90	71
30	1200	326T	91	79
40	1200	364T	92	78
50	1200	365T	92	81
60	1200	404T	92	83
75	1200	405T	92	80
100	1200	444T	93	83
125	1200	445T	93	85
1	1800	143T	82	84
1-1/2	1800	145T	84	85
2	1800	145T	84	85
3	1800	182T	87	83
5	1800	184T	88	83
7-1/2	1800	213T	89	85

HP Factor	RPM (Syn)	NEMA Frame	Minimum Percent Efficiency	Minimum Percent Power Factor
10	1800	215T	90	84
15	1800	254T	91	86
20	1800	256T	91	85
25	1800	284T	92	84
30	1800	286T	93	86
40	1800	324T	93	83
50	1800	326T	93	85
60	1800	364T	93	87
75	1800	365T	93	87
100	1800	405T	94	86
125	1800	444T	94	87
150	1800	445T	94	88
200	1800	447T	95	87
1-1/2	3600	143T	82	85
2	3600	145T	82	87
3	3600	182T	82	87
5	3600	184T	85	88
7-1/2	3600	213T	86	86
10	3600	215T	86	86
15	3600	254T	88	91

HP Factor	RPM (Syn)	NEMA Frame	Minimum Percent Efficiency	Minimum Percent Power Factor
20	3600	254T	89	89
25	3600	384T	90	92
30	3600	286T	91	92
40	3600	324T	91	91
50	3600	326T	90	92
60	3600	364T	91	93
75	3600	365T	91	91
100	3600	405T	92	92

For motors not in schedule, provide manufacturer's standard high-efficiency motor.

D. Service Factor Schedule

HP	3600 rpm	1800 rpm	1200 rpm	900 rpm
1/6 - 1/3	1.35	1.35	1.35	1.35
1/2	1.25	1.25	1.25	1.15
3/4	1.25	1.25	1.15	1.15
1	1.25	1.15	1.15	1.15
>1 - 150	1.15	1.15	1.15	1.15

E. Single-phase motors shall conform to the following respective requirements. The driven equipment supplier shall furnish motor starter, motor type, and motor enclosure type suitable for the application.

1. Single-Phase Power - Split-Phase Motors
   a. Starting Torque: Less than 150 percent of full load torque.
   b. Starting Current: Up to seven times full load current.
   c. Breakdown Torque: Approximately 200 percent of full load torque.
   d. Drip-Proof Enclosure: Class A (50 degrees C temperature rise) insulation, NEMA Service Factor, prelubricated sleeve or ball bearings.

e. Enclosed Motors: Class A (50 degrees C temperature rise) insulation, 1.0 Service Factor, prelubricated sleeve or ball bearings.

2. Single-Phase Power - Permanent-Split Capacitor Motors
   a. Starting Torque: Exceeding 1/4 of full load torque.
   b. Starting Current: Up to six times full load current.
   c. Multiple Speed: Through tapped windings.
   d. Open Drip-Proof or Enclosed Air Over Enclosure: Class A (50 degrees C temperature rise) insulation, minimum 1.0 Service Factor, prelubricated sleeve or ball bearings, automatic reset overload protector.
3. Single-Phase Power - Capacitor Start Motors
   a. Starting Torque: Three times full load torque.
   b. Starting Current: Less than five times full load current.
   c. Pull-Up Torque: Up to 350 percent of full load torque.
   d. Breakdown Torque: Approximately 250 percent of full load torque.
   e. Motors: Capacitor in series with starting winding: provide capacitor-start/capacitor-run motors with two capacitors in parallel with run capacitor remaining in circuit at operating speeds.
   f. Drip-Proof Enclosure: Class A (50 degrees C temperature rise) insulation, NEMA Service Factor, prelubricated bearings.
   g. Enclosed Motors: Class A (50 degrees C temperature rise).

PART 3 EXECUTION

Not used.

-End of Section-

ATTACHMENT 1

MOTOR DATA SHEET

MOTOR DATA SHEET

Submit for each motor. Mark N/A if not applicable.

1. Driven Equipment Number: _____
2. Driven Equipment Name: _____
3. Motor Manufacturer: _____
4. Quantity: _____
5. Horsepower (hp): _____
6. RPM: _____
7. Voltage: _____
8. Enclosure Type: _____
9. Frame: _____
10. Phase/Frequency: _____
11. 40 degree C ambient insulation: _____
12 Service Factor: _____
13 NEMA Design: _____
14. Space Hunters: _____
15. Full Load Amperes (FLA): _____
16. Locked Rotor Amperes (LRA): _____
17. Efficiency:
    - 1/2 Load: _____
    - 3/4 Load: _____
18. Power Factor:
    - 1/2 Load: _____
    - 3/4 Load: _____
    - Full Load: _____

SECTION 15250

INSULATION SPECIFICATION

PART 1 GENERAL

1.1 SECTION INCLUDES

A. The specification describes the basic requirements for the selection and application of insulation systems for indoor and outdoor service. The temperature range of this specification is up to 1200°F for hot insulation and -60°F for cold insulation. Pipelines requiring insulation are designated on pipe line lists and process and instrument diagrams. Type of insulation is designated on pipeline list.

Equipment insulation is designated on equipment drawings, equipment specifications, and process and instrument diagrams. Type of insulation is designated on equipment list. Instruments requiring insulation shall be so designated on the instrument list or the instrument data summary sheets. Type of insulation shall be the same as that of the process line in which the instrument is installed.

The terms "hot" and "cold" used in this specification refer to temperatures 51°F and above, and 50°F and below.

1.2 RELATED SECTIONS

A. Section 15050 - Piping and Accessories
B. Section 15080 - Piping Specialties
C. Division 11 - Equipment

1.3 REFERENCES, CODES AND STANDARDS

A. American Society for Testing and Materials (ASTM)
1. ASTM B209-93 - Aluminum and Aluminum-Alloy Sheet Plate
2. ASTM C533-85 - Calcium Silicate Block and Pipe Thermal Insulation
3. ASTM C552-91 - Cellular Glass Thermal Insulation
4. ASTM C547 - Mineral Fiber Preformed Pipe Insulation
5. ASTM C177-63 - Steady State Heat Flux Measurements and Thermal Transmission Properties by Means of the Guarded Hot Plate Apparatus

B. American National Standards Institute (ANSI)

C. American Society of Mechanical Engineers (ASME)

D. Underwriter's Laboratories (UL)

E. Bureau of Mines Report R1 6366 - Rigid Foams for Mines

1.4 SUBMITTALS

A. Certificate of Conformance: Manufacturer shall certify and provide data which indicate that all products supplied meet or exceed specification requirements.

B. Submit product data and installation manuals.

C. Copies of the material manufacturer's Material Safety Data Sheet (MSDS) for all products to be used in the installation shall be submitted. These sheets shall be submitted prior to start of installation work and prior to bringing any insulation material to the site.

1.5 DELIVERY, STORAGE AND HANDLING

A. Insulation Materials

1. Insulation materials shall be identified, inspected, controlled, and protected in a manner that will assure conformance with the referenced codes, standards and manufacturer's recommendations.
2. Care shall be taken in the storage and handling of all insulation material so that contamination by grease, moisture, or other foreign matter does not occur. Insulation materials shall be stored off the ground, protected from the weather, and handled so that physical damage to the insulation material does not occur.

1.6 SEQUENCING AND SCHEDULING

A. Insulation shall not be installed on the equipment or piping system until the system has passed a hydrostatic pressure test.

B. Insulation shall be applied over clean, dry surfaces and tracing.

PART 2 PRODUCTS

2.1 PRODUCTS

A. Symbols - The type of insulation shall be specified for piping and equipment using the following symbols:

Application	Symbol
Heat conservation	HC1 or HC2
Cold conservation	CC
Cold conservation-refrigeration	CCR
Personnel protection	PP1
Antisweat	AS
Severe service	HCF or CCF
Freeze protection	FP

B. Types and Uses of Insulation

1. Types HC1 and HC2 insulations shall be specified for hot surfaces where heat loss must be limited for economic or process control purposes, as follows:

   - Type HC1 - Surface 401°F and over
   - Type HC2 - Surfaces 51°F to 400°F

2. Type CC and CCR insulation shall be specified for cold surfaces where heat gain must be limited for economic or process control purposes.
3. Type PP1 insulation shall be specified for surfaces which normally operate continuously at temperatures in excess of 140°F, for which heat loss need not be limited, but the possibility of human contact exists.
4. Types HC1 and HC2 insulation are to be used for PP1 according to temperature criteria, with thickness as shown in Figure 1. Unless otherwise specified, insulation shall be applied only to that portion of the surface subject to contact by an operator in the normal performance of his duties (up to 7 feet - 0 inches above finished grades on platforms and surfaces, 3 feet - 0 inches horizontally distant from any operating level).
5. Type AS insulation shall be specified for surfaces normally below average ambient temperature where heat gain is not to be limited, but from which the dripping of condensed moisture would create a hazard, constitute a nuisance, or result in corrosive action.
6. Types HCF or CCF are for severe service conditions using cellular glass or foam, ceramic-molded, or factory-fabricated fitted insulation usually with protective aluminum covering.
7. Type FP insulation is for freeze protection. Freeze protection areas are those various portions of systems requiring "some" insulation or heat tracing with minimum insulation to maintain operation when the ambient temperature is at or below the fluid freeze point.

C. Insulation Thickness and Typical Details

1. Insulation thickness shall be based upon the normal operating temperature of a surface, and not upon its design temperature, or temporary start-up or emergency temperatures. For heat- traced lines, selection of insulation thickness shall be based upon the heated medium temperature if this temperature is higher than the normal operating temperature of the line.
2. Insulation details specified herein indicate minimum requirements only.
3. Particular attention shall be paid to the various thicknesses for the different pipe sizes to ensure and provide the necessary clearances between piping, valves, fittings, equipment, ceilings, and adjacent walls.

2.2 GENERAL REQUIREMENTS

A. Installation

1. Insulation shall be applied over clean, dry surfaces that are free from projections. All segments shall be butted together firmly and all vapor barriers shall be sealed against moisture penetration. The application methods shall conform to the particular instructions listed in these specifications unless otherwise indicated by the IT Corporation (IT) representative in writing.
2. The contractor shall be responsible for furnishing insulation of the exact dimensions to fit lines of iron pipe size or tubing size depending on the type of line to be insulated. Full thickness insulation shall be applied on piping extended through sleeves. All equipment in the work areas shall be protected from damage and from exposure to insulation dusts, powders, or pieces of insulation. Particular care shall be given to the protection of pumps, motors, and drives.
3. Insulation shall not be applied to ductwork, piping, or equipment until all testing has been completed.
4. Trowelling of mastics and application of adhesives or Armstrong Insul-color shall not be performed below 40°F without prior written approval of the IT representative.
5. All materials shall be installed in a neat and workmanlike manner, and shall be installed in strict accordance with the manufacturer's recommendations.
6. Insulation on valves, fittings, flanges (including equipment flanges), piping appurtenances, etc., shall be of equal thickness and insulation value to that installed on adjoining pipe. Cover all valves (generally up to packing gland), strainer bodies, flanges, and flash tanks. Insulation for ball valves and plug cocks shall not cover the travel stop pin. Care shall be taken to ensure that all working parts of valves and other mechanical equipment are protected when insulation is applied.
7. All sensing devices, gauges, instruments, relief valves, and other devices that require periodic calibration or maintenance shall be insulated in a

manner so that it can be maintained from outside the insulation or the insulation applied in a manner that it can be temporarily removed when maintenance is required.

8. For tubing or cable traced lines, long lag insulation is preferred.

B. Equipment Insulation

1. Manholes and handholds of equipment requiring insulation shall be provided with removable covers.
2. Insulated vessels supported on skirts shall be insulated over the entire exterior of the skirt.

C. Joints

1. Expansion and contraction joints shall be provided for the differential expansion or contraction between the insulation and insulated surface operating at a temperature of 350°F and above, and 0°F and below, respectively.
2. All joints of double layer preformed sections in block insulation shall be staggered.
3. All unavoidable voids between sections of insulation shall be filled with asbestos-free mineral wool for hot applications and fiberglass for cold applications.
4. Staples shall not be used to secure insulating materials having vapor barrier jackets. All openings, joints, laps, and end strips on insulation specified with a vapor barrier shall be sealed against moisture penetration with the vapor barrier cemented in place with adhesive.

D. Insulation Supports

1. Tanks, towers, and other vessels shall be provided with attachments suitable for supporting the insulation. They shall consist of rings, clips, angles, studs, etc.
2. Insulation on vertical lines shall be supported by attaching a support ring to the piping at a maximum spacing of 20 feet. The support ring shall be cut from steel plate.

E. Inspection

1. Inspection of all phases of the installation will be made at random by the IT insulation inspector. Any work that is not in accordance with this specification or not installed in a neat, workmanlike appearance will be noted. Any rework required to have the installation comply with this specification will be solely at the insulation contractor's expense.

2.3 PIPING INSULATION TYPE HC1 (401°F AND ABOVE)

A. Insulation Materials

1. Material shall be asbestos-free calcium silicate molded type sectional insulation.
2. Asbestos-free calcium silicate shall conform to American Society for Testing and Materials (ASTM) Standard C5333.
3. Thickness of insulation for operating temperatures up to 1200°F nominal shall be as shown in Figure 1.

B. Application

1. Insulation shall be applied over clean, dry surfaces. Adjoining sections shall be butted firmly together using single layer applications. Half sections shall be installed with the transverse joints staggered for lines 6 inches and larger. Factory-applied canvas shall be pasted neatly in place with Sealfas Coating 30-36 (Benjamin Foster Company) or approved equal. Coverage shall be 60 square feet per gallon; do not thin.
2. Fittings less than 3 inches nominal size shall be insulated with one roughing layer of asbestos-free mineral-wool-type insulating cement (Keene Super Powerhouse Asbestos-Free or equal) and one finishing layer of asbestos-free insulating cement. Thorough drying of the roughing layer is required. Fitting insulation shall be equal in thickness to the insulation on adjoining piping. Fittings, flanges, and valves 3 inches nominal size and larger shall be covered with fabricated, mitered segments of insulation of the same type and thickness as applied to adjoining piping. The mitered segments shall be cut accurately to assure a snug fit. The segments shall be wired tightly in place with 16-gauge stainless-steel wire. A finishing layer of asbestos-free mineral-wool-type insulating cement (Keene Super Powerhouse Asbestos-Free or equal) shall be applied over the mitered segments.

C. Exterior Finish of Insulation

1. Outdoors -- Over all outdoor piping insulation, apply corrugated or embossed aluminum jacketing with integral vapor barrier liner. Aluminum to be 0.016-inch thickness. Install jackets using 0.5- inch stainless-steel bands and wing seals 12 inches on centers and by vendor's recommended installation procedures.

   Alternate: Jacket material other than aluminum may be used with prior approval of IT representative. Such material(s) must be applied per manufacturer's recommendations.

2. Indoors -- Insulation for pipe fittings, valves, and flanges shall be finished with 8-ounce canvas jackets pasted neatly in place with Sealfas Coating 30-36 or approved equal. A factory applied jacket is also acceptable.

2.4 EQUIPMENT INSULATION TYPE HC1 (401°F AND ABOVE)

A. Insulation Material

1. Materials shall be asbestos-free calcium silicate preformed sections or block insulation conforming to ASTM Standard C533.
2. For insulation thickness see Figure 1. (See equipment drawings and/or flow diagrams for possible exceptions.)

B. Application

1. Insulation shall be applied over clean, dry surfaces. Insulation shall be cut or scored, where necessary, to fit the shape and contour of the equipment. Adjoining sections shall be butted together firmly; joints shall be staggered. The blocks shall be secured firmly in place by 0.5-inch by 0.020-inch stainless-steel bands or 16-gauge galvanized annealed wire spaced not more than 9 inches on centers. Wire cables shall be used, where required, to secure the insulation firmly. One-inch chicken wire shall be wrapped tightly around the bound insulation. A roughing layer of asbestos-free mineral-wool-type insulating cement (Keene Super Powerhouse Asbestos Free or equal) and a finishing layer of asbestos-free insulation cement shall be applied to cover the chicken wire completely.
2. Both ends of the insulation along the shell of vessels and tanks shall extend 2 inches beyond the knuckle radius to help form and hold the insulation on the heads. All voids between the head and shell insulation shall be filled with insulation. All nozzles shall be insulated up to but not including the flanges with the same thickness as on the equipment. The insulation shall be cut back at flanges, manholes, cover plates, and other openings so that the bolts may be removed without disturbing the insulation. Insulation shall not be applied over the name plates but shall be beveled off around them.
3. The use of single-layer molded-type sectional pipe insulation is recommended for insulating heat exchangers where shell diameters are of iron pipe size. Asbestos-free calcium silicate can be used as outlined under piping.

C. Exterior Finish of Insulation

1. Outdoors -- One-inch chicken wire shall be wrapped tightly around the block insulation. A smoothing layer of asbestos-free insulating cement shall be trowel applied over the chicken wire. Coverage shall be complete. After thorough drying, apply 10-by-10 open-weave glass fabric

and two coats of Thermalkote as manufactured by the Flintkote Company to a total thickness of 0.25-inch when dry.

2. Indoors -- A 9-ounce canvas jacket shall be pasted neatly in place with Sealfas Coating 30-36 (Benjamin Foster Company) or approved equal. Surface coverage with Sealfas shall be complete. Coverage shall be 60 square feet/gallon; do not thin. Adequate overlap of canvas shall be provided to accommodate shrinkage. Seams should preferably be located behind equipment.

2.5 PIPING INSULATION TYPE HC2 (51° TO 400°F)

A. Insulation Material

1. Material shall be fiberglass heavy density sectional pipe insulation, single layer, molded type, as manufactured by Owens-Corning Fiberglass Corporation. For thickness refer to Figure 1.
2. Fiberglass shall conform to ASTM Standard C547 and shall have vinyl factory-applied jacket.

B. Application

1. Insulation shall be applied over clean, dry surfaces. Adjoining sections shall be butted together firmly using single-layer applications. Insulation shall be installed according to manufacturer's recommendations.
2. All fittings, valves, and flanges shall be insulated with molded fibrous glass fitting covers (Owens-Corning Fiberglass Corporation) or fabricated mitered segments of piping insulation equal in thickness to the insulation on adjoining piping. Mitered segments, where used, shall be cut accurately to assure a snug fit. The segments and covers shall be wired tightly in place using 16-gauge stainless-steel wire, or approved fiberglass reinforced tape. Fitting covers and mitered segments shall be given a smoothing layer of an approved asbestos-free insulating cement. Fittings smaller than 3 inches nominal size may be insulated with two coats of asbestos-free mineral-wool-type insulating cement.

C. Exterior Finish of Insulation

1. Outdoors -- The exterior finish of Type HC2 insulation outdoors shall be the same as that of Type HC1. See "Exterior Finish of Insulation" in Section 2.3.C.1 for details. In lieu of stainless-steel bands, use 0.5-inch aluminum bands and wing seals 12 inches on center.
2. The exterior finish of Type HC2 insulation indoors shall be a factory applied all-service jacket.

2.6 EQUIPMENT INSULATION TYPE HC2 (51° TO 400°F)

A. Insulation Materials

1. Material shall be fiberglass PF-705 industrial insulation, unfaced, rigid board, as manufactured by Owens-Corning Fiberglass Corporation. Density shall be 6 pounds/cubic foot or 3 pounds/cubic foot with IT representative approval.
2. Thickness shall be 1.5 inches. See drawings and/or flow sheets for possible exceptions.
3. Where insulation is specified in thickness greater than 2 inches, it shall be installed in multiple layer applications. Moisture barrier applications shall be made on the top layer of insulation only, as noted in these specifications.

B. Applications

1. Single layer -- Insulation shall be applied over clean, dry surfaces.
   a. The 24-inch by 43-inch boards shall be cut or scored as necessary to fit the shape and contour of the vessel accurately. Joints shall be staggered throughout and shall be butted tightly after they have been coated with Benjamin Foster 81-33 Fire Resistive Adhesive, 0.0625-inch thick minimum. The applied adhesive must still be tacky when sections are butted together. The 81-33 adhesive shall serve as a joint sealer only; it shall not be used as filler material at poorly fitted joints. Straight shell insulation shall be secured firmly in place by 0.5-inch by 0.020-inch stainless-steel bands spaced not more than 9 inches on centers.
   b. Vessel heads shall be insulated with cut or mitered sections set inside the overlapping side wall insulation. The overlap shall be equal to the thickness of the head insulation, to help form and hold the insulation on the heads. Field-cut segments shall be accurately fitted, particularly at nozzles and manholes. Apply 81-33 adhesive as the joint sealer as described above. All voids between equipment surfaces and insulation shall be packed firmly with light density fiberglass. The head insulation shall be secured by 16-gauge copper wire on 6-inch centers. Cables, encircling the vessel shell near both heads, shall serve as tie-points for the wire. They shall be 0.125-inch diameter, minimum and shall be galvanized or cadmium plated steel. The wires shall be looped at all intersections to tighten the head insulation firmly. Wires and bands shall be pulled sufficiently tight so that they are set solidly in the insulation surface. Insulation shall not be applied over the nameplates, but beveled off around them.
   c. Nozzles shall be covered up to but not including the flanges with insulation of the same thickness as on the vessel. Legs and

supports shall be insulated to a minimum of 8 inches from the main insulation surface. Check drawings for additional requirements that may be listed for insulating support legs.

d. For indoor equipment only, 1-inch chicken wire shall be wrapped tightly around the bound insulation, followed by a roughing layer of asbestos-free mineral-wool-type insulating cement (Keene Super Powerhouse or equal), and a smoothing layer of asbestos-free insulating cement. The roughing and smoothing layers shall cover the chicken wire completely. Thorough drying of the roughing layer is required.

2. Double Layers -- Application shall be similar to that described above for single layer except that:
   a. Joint sealer shall be used for the top layer of insulation only.
   b. Joints for the top layer of insulation shall be staggered with respect to joints for the bottom layer.
   c. Chicken wire (for indoor equipment only) shall be wrapped around the bound insulation of the top layer, followed by the roughing and smoothing layers of cement.
   d. Second layer head insulation shall extend out to the top of the second layer shell insulation. Side and end joints shall be staggered over joints of preceding layer so that no two joints coincide.
   e. Insulation shall be applied at nozzles in a manner that will permit drainage and the removal of bolts.

3. Joints for both layers shall be butted tightly. The 81-33 adhesive shall serve as a joint sealer only (for the top layer of insulation); it shall not serve as a filler material for poorly fitted joints.

C. Exterior Finish of Insulation

1. Tank heads and shells outdoors -- Chicken wire wrapping and cement applications shall not be provided for outdoor equipment, unless required for cosmetic reasons. Apply a tack coat of vinyl acrylic mastic by trowel at the rate of 4 gallons/100 square feet. Insulation must be dry before mastic application. Embed open-weave white glass fabric cloth into the wet tack coat and smooth out to avoid wrinkles. Cover with the mastic at the rate of 8 gallons/100 square feet; apply before the tack coat has set through. Complete coverage is required. Proper and complete flashing shall also be required.
2. Tank heads and shells indoors -- Apply a tack coat of Benjamin Foster Tite-Fit Coating 30-35 for vapor barrier protection. Do not thin; apply at t he rate of 4 gallons/100 square feet. Surface coverage must be complete. Embed 8-ounce canvas jacket into the wet tack coat. Provide

adequate overlap of canvas (3 inches minimum) to accommodate shrinkage. Seams should preferably be located behind equipment.

Wherever insulation is terminated, flash at least 3 inches by embedding a 4-inch-wide strip of No. 20 open-weave glass fabric cloth into wet tack coat.

Allow the 30-35 tack coat to dry for at least 24 hours. Apply a finish coat of Benjamin Foster Sealfas Coating 30-36 over the dry canvas at the rate of 50 square feet/gallon; do not thin.

3. Tank shells - outdoors and indoors -- in lieu of the foregoing shell coverings, vendor may apply aluminum sheet with IT representative approval.

2.7 PIPING INSULATION TYPE CC (-60° TO +50°F)

A. Insulation Materials

1. Material shall be rigid, fluorocarbon blown, polyurethane foam (rated self-extinguishing, single-layer, molded type sectional pipe insulation).
2. The polyurethane foam insulation shall have a density of 2 pounds/cubic foot and a nominal K factor of 0.15 British thermal unit (Btu)/hour square foot, °F/inch at 75°F in service (bare). It shall conform to the Bureau of Mines Report R1 6366 (Rigid Foams for Mines) for flame penetration and thermal deformation testing.
3. ASTM Standard D1692-68 shall not be used as the criterion for evaluating the flammability of plastic foams for this specification. Where plastic foam is used, it is to be regarded as a combustible material and must be protected by adequate fire control systems, such as sprinklers.
4. Acceptable materials include the following or approved equal:
   - Armstrong ARMALOK as manufactured by Armstrong Cork Company.
   - Gold Bond Green Zer-O-Ce, as manufactured by National Gypsum Company (request 2 pounds/cubic foot density)
5. Thickness - Thickness of "fluorocarbon blown" foam (K-0.15) shall be as listed below for the indicated temperature ranges. Insulation shall be iron pipe size or tubing size depending on the type of line to be insulated.

Nominal Thickness of Insulation, Inches

Temperature Range °F	Pipe Sizes				
	To 1-1/4"	1-1/2"-3"	3-1/2"-6"	8"-12"	14"-18"
50 to 41	1/2	3/4	1	1	1
40 to 21	3/4	1	1	1	1-1/2
20 to 0	1	1	1-1/2	1-1/2	1-1/2
-1 to -30	1-1/2	2	2	2	2-1/2
-31 to -60	1-1/2	2	2	2-1/2	2-1/2

All above thicknesses are referred to 90°F ambient and 80 percent relative humidity.

B. Application

1. Insulation shall be applied over clean, dry surfaces. Adjoining sections shall be butted together tightly after the surfaces have been coated with Benjamin Foster 81-33 Fire Resistive Adhesive, 0.0625-inch thick minimum. The applied adhesive must still be tacky when sections are butted together. Butt joints shall be staggered by starting from a fitting with one section full length and mating section cut to half length. The longitudinal joints shall be maintained in a straight line along the length of piping and positioned at the top and bottom of the piping.
2. Ends of pipe insulation (where insulation terminates on a pipe line) shall be sealed off and flashed with a fire resistant vapor barrier mastic. Mastics to be used are listed under Section 2.7.C.4, "Exterior Finish of Insulation." The insulation shall be sealed to the pipe surface at all flanges, valves, and fittings, and at intervals of more than 21 feet on continuous runs, by the fire resistive adhesive.
3. Insulation shall be wired in place with 16-gauge stainless-steel wire or recommended system from insulation vendor. The wiring shall be spaced not more than 9 inches on centers. Wiring in place shall start approximately 1 inch from the ends of each section. Wires shall be pulled sufficiently tight so as to be embedded in the insulation surface. Twisted ends of the wire shall also be embedded so as not to puncture subsequent covering.
4. Fittings, flanges, and valves shall be insulated with molded fitting covers of the same material and thickness as the pipe insulation. Fitting covers shall be supplied in half sections. Fitting covers shall be installed and sealed first, pipe insulation shall be butted to and sealed to the covers. Benjamin Foster 31-33 Fire Resistive Adhesive shall be used throughout as the joint sealer and adhesive on polyurethane insulation. All mating faces of fitting covers shall be sealed.

5. After sealing, fitting covers shall be secured with wires at each end; large covers shall be secured with additional wires. Valves shall be insulated up to and including the bonnet; however, packing glands shall be exposed. Seal where the valve stem protrudes through the insulation. Voids which may exist between the insulation and flanged valves or flanged fittings shall be filled with shreds of the same material as the insulation.
6. The integrity of the insulation shall not be disturbed at points of support.

C. Exterior Finish of Insulation

1. Straight Runs of Piping
   a. Outdoors - Jacketing shall be the same as described in Section 2.3.C.1. Nothing shall be permitted to pierce the jacket or vapor barrier at any point.
   b. Indoors - Jacketing shall be the same as described in Section 2.3.C.2. Nothing shall be permitted to pierce the jacket or vapor barrier at any point.
   c. Underground - Straight runs underground shall be finished using 15-pound tar paper as an inner jacket, unless otherwise indicated on the drawings. All joints shall be overlapped 3 inches minimum with longitudinal laps facing downward (4 o'clock position for inner jacket, 8 o'clock position for outer jacket). Joints for both jackets shall be sealed completely with a climatized waterproof mastic roofing cement. Both jackets shall be fastened securely with 14-gauge copper wire spaced not more than 8 inches on centers. Nothing shall be permitted to pierce the jacket at any point. Staples are not to be used.

      A sand bed and cover 6 inches minimum thickness all around shall serve as protection for insulated lines underground.

      Note: For severe underground conditions the use of a prefabricated conduit system shall be considered.
2. Fittings, Flanges, and Valves -- Covers for fittings, flanges, and valves shall have a tack coat application of vapor barrier mastic, followed by a white glass fabric wrapping, as listed below, and a finish application of vapor barrier mastic (over the glass fabric wrapping only).
   a. Outdoors and Indoors - All sizes - No. 20 open-weave white glass fabric wrapping
3. In all cases the fabric wrapping shall be embedded in the tack coat and securely fastened. A 2-inch minimum overlap shall extend over straight runs of adjoining pipe insulation. Coverage shall be complete. Insulation at the tops of strainer bodies shall be removable, but shall be sealed and finished effectively against moisture penetration.

4. The following vapor barrier mastics, all Benjamin Foster, shall be used in the areas indicated. Coverages listed are minimum. The materials shall not be thinned. They shall be stored and applied in strict conformance with the manufacturer's temperature limitations.
   - Indoors: 30-35 Tite-Fit Coating, white fire resistive, brush applied.
     Tack Coat: 2 gallons
     Finish Coat: 2 gallons per 100 square feet
   - Outdoors: 60 to 35 Fire Resistive C. I. Mastic, aluminum, trowel applied (use with aluminum covering).
     Tack Coat: 4 gallons per square feet
     Finish Coat: 8 gallons per 100 square feet

2.9 EQUIPMENT INSULATION TYPE CC (-60° TO +50°F)

A. Insulation Materials

1. Material shall be rigid, fluorocarbon blown, polyurethane foam (rate self-extinguishing) board insulation.
2. The polyurethane foam shall have a density of 2 pounds/cubic foot and a nominal K factor of 0.15 Btu/hour square foot °F/inch at 75°F in service (bare). It shall conform to Bureau of Mines Report RI 6366 (Rigid Foams for Mines) for flame penetration and thermal deformation testing.
3. ASTM Standard D1692-68 shall not be used as the criterion for evaluating the flammability of plastic foams for this specification. Where plastic foam is used it is to be regarded as a combustible material and must be protected by adequate fire control systems, such as sprinklers.
4. Acceptable materials may be obtained from:
   - Armstrong Cork Company
   - Gold Bond Green Zer-O-Cel, as manufactured by national Gypsum Company (request 2 pound/cubic foot density)
5. Thickness - Thickness of "fluorocarbon blown" foam (K-0.15) shall be as listed below for the indicated temperature ranges:

Temperature Range, °F	Insulation Thickness, Inches
50 to 41	1
40 to 21	2
-1 to -30	2-1/2
-31 to -60	3

All above thicknesses are referred to 90°F ambient and 80 percent relative humidity.

B. Application

1. Insulation shall be applied over clean, dry surfaces. Curved segments of single layer thickness shall be used for insulating cylindrical surfaces. Equipment diameters shall be specified when ordering curved segments to assure a tight fit of insulation to the vessel straight shell. Where required, the last segment in each row shall be field cut for final fit around the circumference. Flat board forms shall be used for rectangular shaped tanks and may be substituted for curved segments on vessels 12-foot diameter or more.
2. Joints shall be staggered throughout and shall be tightly butted after they have been coated with Benjamin Foster 81-33 Fire Resistive Adhesive, 0.0625-inch thick minimum. The applied adhesive must still be tacky when sections are butted together.
3. Vessel heads shall be insulated with flat block insulation set inside the overlapping side wall insulation. Field cut segments shall be accurately fitted, particularly at nozzles and manholes. Apply adhesive per above. All voids shall be covered up to but not including the flanges with insulation of the same thickness as on the vessel. Legs and supports shall be insulated to a minimum of 8 inches from the main insulation surface. Additional requirements may be listed for support legs. Support bottom head insulation temporarily with spot-applied adhesive.
4. Apply a tack coat of Benjamin Foster Tite-Fit Coating 30-35 for vapor barrier protection. Do not thin; apply at a rate of 4 gallons/100 square feet. Surface coverage must be complete. Embed 8-ounce canvas jacketing into the wet tack coat. Provide adequate overlap of canvas (3-inch minimum) to accommodate shrinkage. Seams should preferably be located behind equipment.

C. Exterior Finish of Insulation

1. Tank heads and shells outdoors -- Chicken wire wrapping and cement applications shall not be provided for outdoor equipment, unless required for cosmetic reasons. Apply a tack coat of vinyl acrylic mastic by trowel at the rate of 4 gallons/100 square feet. Insulation must be dry before mastic application. Embed open-weave white glass fabric cloth into the wet tack coat and smooth out to avoid wrinkles. Cover with the mastic at the rate of 8 gallons/100 square feet; apply before the tack coat has set through. Complete coverage is required. Proper and complete flashing shall also be required.
2. Tank heads and shells indoors -- Apply a tack coat of Benjamin Foster Tite-Fit Coating 30-35 for vapor barrier protection. Do not thin; apply at the rate of 4 gallons/100 square feet. Surface coverage must be complete. Embed 8-ounce canvas jacket into the wet tack coat. Provide adequate overlap of canvas (3 inches minimum) to accommodate shrinkage. Seams should preferably be located behind equipment. Wherever

insulation is terminated, flash at least 3 inches by embedding a 4-inch-wide strip of No. 20 open-weave glass fabric cloth into wet tack coat. Allow the 30-35 tack coat to dry for at least 24 hours. Apply a finish coat of Benjamin Foster Sealfas Coating 30-36 over the dry canvas at the rate of 50 square feet/gallon; do not thin.

3. Tank shells - outdoors and indoors -- in lieu of the foregoing shell coverings, vendor may apply aluminum sheet with IT representative approval.

2.9 PIPING INSULATION TYPE CCR (-20° TO +50°F) (REFRIGERATION LINES ONLY)

A. Insulation Materials

1. Material shall be flexible foam plastic, closed cell pipe (or sheet) insulation, Armstrong STANDARD ARMAFLEX or approved equal.
2. Material shall have a density of 5.7 pounds/cubic foot and a nominal K factor of 0.27 maximum Btu/hour square foot/°F/inch at 75°F in service (bare), when tested by ASTM C177-63. Water vapor permeability shall be 0.15 per inch or less when tested by ASTM C355-64 water method.
3. ASTM Standard D1692-68 shall not be used as the criterion for evaluating the flammability of plastic foams for this specification. Where plastic foam is used, it is to be regarded as a combustible material and must be protected by adequate fire control systems, such as sprinklers.
4. Thickness of STANDARD ARMAFLEX insulation shall be as listed below for the indicated temperature ranges. This material shall be used for refrigerant lines or for condensation (sweating) protection only. It is not to be used over electrical steam tracing. Insulation shall be pipe or tubing size depending on the type of line to be insulated.

Nominal Thickness of Insulation, Inches

Temperature Range °F	Pipe Sizes				
	To 1-1/4	1-1/2"-3	3-1/2"-6"	8"-12"	14"-18"
50 to 31	1	1	1-1/2	1-1/2	1-1/2
40 to 21	1-1/2	1-1/2	1-1/2	1-1/2	2
20 to 0	1-1/2	1-1/2	2	2	2
-1 to -30	2	2-1/2	2-1/2	2-1/2	3

All above thicknesses are referred to 90°F ambient and 80 percent relative humidity.

B. Application

1. Insulation shall be applied over clean, dry surfaces.
2. STANDARD ARMAFLEX insulation shall be slipped on the pipe before connection wherever possible, and the butt joints shall be sealed with Armstrong 520 Adhesive. (Note: Small amounts of powdered lubricant may enter pipe or tubing if left open. Plug open end of pipe or tubing before slipping on ARMAFLEX.) Where the slip-on technique is not possible, the STANDARD ARMAFLEX insulation shall be slit and applied to the pipe, and the longitudinal seams and butt joints shall be staggered and sealed with 520 Adhesive.
3. Fitting cover insulation shall be fabricated and installed according to the manufacturer's recommended procedures. Sweat fittings shall be insulated with miter-cut pieces of STANDARD ARMAFLEX pipe insulation the same size as on adjacent piping. Screwed fittings shall be insulated with sleeved fitting covers fabricated from miter-cut pieces of STANDARD ARMAFLEX pipe insulation according to the manufacturer's sleeving size recommendations and shall be overlapped and sealed to the adjacent pipe insulation. Weld pipe fittings 6-inch IPS through 10-inch IPS shall be insulated with STANDARD ARMAFLEX sheet insulation conforming to template patterns recommended by the manufacturer. All valves shall be insulated with STANDARD ARMAFLEX pipe and sheet insulations. All joints and miter-cut pieces shall be sealed with 520 Adhesive.
4. At outside carrying hanger locations, use load-bearing wooden blocks having the same thickness as the adjacent insulation. All joints and seams shall be sealed with two coats of 520 Adhesive.

C. Exterior Finish of Insulation

1. Straight Runs of Piping
   a. Outdoors: Jacketing shall be the same as described in Section 2.3.C.1. Nothing shall be permitted to pierce the jacket or vapor barrier at any point.
   b. Indoors: No additional jacketing required.
2. Fittings, Flanges, and Valves
   a. To be field fabricated from Armaflex or equal.

2.10 EQUIPMENT INSULATION TYPE CCR (-60° TO +50°F) (REFRIGERANT EQUIPMENT ONLY)

A. Insulation Materials

1. Material shall be Fiberglass PF-705 industrial insulation, foil faced, rigid board, as manufactured by Owens-Corning Fiberglass Corporation. Density shall be 6 pounds/cubic foot. Compressive strength at 10 percent deformation shall be 350 pounds per square foot (psf).

2. Thickness of fiberglass insulation shall be as listed below for the indicated temperature ranges:

Temperature Range, °F	Insulation Thickness, Inches
50 to 41	1-1/2
40 to 21	2
20 to 0	2-1/2
-1 to -30	3
-31 to -60	-31 to -60

All above thicknesses are referred to 90°F ambient and 80 percent relative humidity.

B. Applications

1. Single Layer

a. Insulation shall be applied over clean, dry surfaces. The 24-inch by 48-inch boards shall be cut or scored as necessary to fit the shape and contour of the vessel accurately. Joints shall be staggered throughout and shall be butted tightly after they have been located with Benjamin Foster 81-33 Fire Resistive Adhesive, 0.0625- inch thick minimum. The applied adhesive must still be tacky when sections are butted together. The 81-33 adhesive shall serve as s joint sealer only; it shall not be used as filler material at poorly fitted joints. Straight shell insulation shall be secured firmly in place by 0.5-inch by 0.020-inch stainless-steel bands spaced not more than 9 inches on centers.

b. Vessel heads shall be insulated with cut or mitered sections set inside the overlapping side wall insulation. The overlap shall be equal to the thickness of the head insulation, to help form and hold the insulation on the heads. Field cut segments shall be accurately fitted, particularly at nozzles and manholes. Apply 81-33 adhesive as the joint sealer as described above. All voids between equipment surfaces and insulation shall be packed firmly with light density fiberglass. The head insulation shall be secured by 16-gauge copper wire on 6-inch centers. Cables, encircling the vessel shell near both heads, shall serve as tie-points for the wire. They shall be 0.125-inch diameter minimum and shall be galvanized or cadmium plated steel. The wires shall be looped at all intersections to tighten the head insulation firmly. Wires and bands shall be pulled sufficiently tight so that they are set solidly in

the insulation surface. Insulation shall not be applied over nameplates but beveled off around them.

c. Nozzles shall be covered up to but not including the flanges with insulation of the same thickness as on the vessel. Legs and supports shall be insulated to a minimum of 8 inches from the main insulation surface. Check drawings for additional requirements that may be listed for insulating support legs.

d. For indoor equipment only, 1-inch chicken wire shall be wrapped tightly around the bound insulation, followed by a roughing layer of asbestos-free mineral-wool-type insulating cement (Keene Super Powerhouse or equal) and a smoothing layer of asbestos-free insulating cement. The roughing and smoothing layers shall cover the chicken wire completely. Thorough drying of the roughing layer is required.

2. Double Layers

a. Application shall be similar to that described above for single layer except that:

b. Joint sealer shall be used for the top layer of insulation only.

c. Joints for the top layer of insulation shall be staggered with respect to joints for the bottom layer.

d. Chicken wire (for indoor equipment only) shall be wrapped around the bound insulation of the top layer, followed by the roughing and smoothing layers of cement.

e. Second layer head insulation shall extend out to the top of the second layer shell insulation. Side and end joints shall be staggered over joints of preceding layer so that no two joints coincide.

f. Insulation shall be applied at nozzles in a manner which will permit drainage and removal of bolts.

3. Joints for both layers shall be butted tightly. The 81-33 adhesive shall serve as a joint sealer only (for the top layer of insulation); it shall not serve as filler material for poorly fitted joints.

C. Exterior Finish of Insulation

1. Tank heads and shells outdoors -- Chicken wire wrapping and cement applications shall not be provided for outdoor equipment, unless required for cosmetic reasons. Apply a tack coat of vinyl acrylic mastic by trowel at the rate of 4 gallons/100 square feet. Insulation must be dry before mastic application. Embed open-weave white glass fabric cloth into the wet tack coat and smooth out to avoid wrinkles. Cover with the mastic at the rate of 8 gallons/100 square feet; apply before the tack coat has set

through. Complete coverage is required. Proper and complete flashing shall also be required.

2. Tank heads and shells indoors -- Apply a tack coat of Benjamin Foster Tite-Fit Coating 30-35 for vapor barrier protection. Do not thin; apply at the rate of 4 gallons/100 square feet. Surface coverage must be complete. Embed 8-ounce canvas jacket into the wet tack coat. Provide adequate overlap of canvas (3 inches minimum) to accommodate shrinkage. Seams should preferably be located behind equipment. Wherever insulation is terminated, flash at least 3 inches by embedding a 4-inch-wide strip of No. 20 open-weave glass fabric cloth into wet tack coat. Allow the 30-35 tack coat to dry for at least 24 hours. Apply a finish coat of Benjamin Foster Sealfas Coating 30-36 over the dry canvas at the rate of 50 square feet/gallon; do not thin.
3. Tank shells - outdoors and indoors -- in lieu of the foregoing shell coverings, vendor may apply aluminum sheet with IT representative approval.

2.11 PIPING INSULATION TYPE AS (25° TO 150°F)

A. Insulation Materials

1. For roof drains, materials shall be either one-piece Fiberglass pipe insulation with fiberglass reinforced plastic (FRP) flame retardant jacket as manufactured by Owens-Corning Fiberglass Corporation or approved equal glass fiber pipe insulation in one-piece molded sections with all-service jacket.
2. For lines other than roof drains, material shall be fiberglass heavy density sectional pipe insulation, vinyl jacket with Self Sealing Lap, as manufactured by Owens-Corning Fiberglass Corporation.
3. Insulation shall be 1-inch thick and shall be iron pipe size or tubing size depending on the type of line to be insulated.

B. Application

1. Insulation shall be applied over clean, dry surfaces. Adjoining sections shall be butted together firmly with joints staggered.
2. For roof drains
   a. After placing the one-piece molded sections of the pipe, the longitudinal laps shall be sealed with Sealfas Coating 30-35 (Benjamin Foster Company). Sealfas shall be applied to cover the lap and its mating surface completely. The wiring shall be spaced not more than 9 inches on centers. Wiring and circumferential joints shall be covered with 3-inch-wide butt strips coated with a self-sealing adhesive. The strips shall be of the same laminated material and finish as the jacket on adjoining piping.

b. Bell ends of cast iron fittings shall be insulated with 1-inch thick layers of fiberglass faced duct wrap blanket insulation or approved equal fine fiberglass blanket with foil scrim kraft. Minimum density shall be 1 pound/cubic foot. The first layer shall be wrapped tightly to the shape of the fitting and secured in place with wrapping twine, spiraled on. Fold and tuck in the blanket as required for a neat fit. The second layer shall be applied in a similar manner, but shall have a 3-inch minimum overlap of aluminum foil extending over and secured to the adjoining piping. This shall be followed with an approved one-coat insulating cement, covering the fitting and overlap completely.

3. For lines other than roof drains.
   a. After the heavy density sectional insulation with self-sealing lap has been placed on the pipe, remove the release paper, starting from an inside corner. The adhesive must be kept clean after the paper has been removed. Seal the longitudinal lap immediately, starting from the center of each section and working towards the ends. Seal the lap with the blunt edge of an insulation knife using firm, uniform pressure. Rub several times making certain that the edge of the lap is sealed down. Circumferential joints shall be sealed with a 3-inch-wide butt tape coated with the same self-sealing adhesive. Fittings of iron pipe size and tubing size shall be insulated with molded fibrous glass fitting covers or mitered segments of pipe insulation equal in thickness to the insulation on adjoining piping. Mitered segments, where used, shall be cut accurately to assure a snug fit. The segments and covers shall be wired tightly in place using 16-gauge stainless-steel wire. Fitting covers and mitered segments shall be given a smoothing layer of an approved one-coat insulating cement.
   b. Fittings 2.5 inch nominal size and smaller may be insulated with two coats of asbestos-free mineral wool all-purpose insulating cement. Overall thickness shall be equal to that of adjoining insulation. All cracks in the insulating cement application shall be repaired.

C. Exterior Finish of Insulation
   1. Straight runs of concealed piping -- No additional finish shall be required over the white vinyl jacket.
   2. Straight runs of exposed piping -- No additional finish shall be required over the white vinyl jacket.
   3. All fittings -- Fittings shall be finished with 6-ounce canvas jacket pasted neatly in place with Sealfas Coating 30-36; do not thin. The canvas jacket shall overlap adjoining applications.

4. Ends of insulation -- Seal all ends of insulation (where insulation terminates a pipe line) with an approved one-coat cement, an embedded No. 20 open-weave white glass fabric wrapping and 6-ounce canvas jacket pasted on with Sealfas 30-36.

D. Special Application

1. Antisweat insulation for piping under laboratory benches -- Armaflex or approved equal may be substituted as the antisweat insulation (in tight quarters only) under laboratory benches. Specify as iron pipe size or tubing size when ordering. Straight runs and fittings shall be insulated. Installation is to be according to manufacturer's instructions.

2.12 EQUIPMENT INSULATION TYPE AS (25° TO 150°F)

A. Insulation Material

1. Material shall be rigid, fluorocarbon blown, polyurethane foam (rated Nonburning) board insulation, or equal.
2. The polyurethane foam shall have a density of 2 pounds/cubic foot and a nominal K factor of 0.15 Btu/hour square foot-°F/inches at 75°F in service (bare). It shall conform to Bureau of Mines Report RI 6366 (Rigid Foams for Mines) for flame penetration and thermal deformation testing.
3. ASTM Standard D1692-68 shall not be used as a criterion for evaluating the flammability of plastic foams for this specification. Where plastic foam is used, it is to be regarded as a combustible material and must be protected by adequate fire control systems, such as sprinklers.

   Alternate materials and application of those materials applied according to the vendor's recommendations may be used with approval of the IT representative.
4. Thickness shall be 1 inch.

B. Application

1. Insulation shall be applied over clean, dry surfaces. Curved segments of single-layer thickness shall be used for insulating cylindrical surfaces unless otherwise indicated. (Curved segments are preferred over double beveled lagging.) Equipment diameters shall be specified when ordering curved segments to assure a tight fit of insulation to the vessel straight shell. Where required, the last segment in each row shall be field cut for final fit around the circumference. Flat board forms shall be used for rectangular shaped tanks and may be substituted for curved segments on vessels of 12-foot-diameter or more.
2. Joints shall be staggered throughout and shall be tightly butted after they have been coated with Benjamin Foster 81-33 Fire Resistive Adhesive

0.0625-inch thick minimum. The applied adhesive must still be tacky when sections are butted together.

3. Vessel heads shall be insulated using flat block insulation set inside the overlapping side wall insulation. Field cut segments shall be accurately fitted, particularly at nozzles and manholes. Apply adhesives as above. All voids shall be filled with shreds of the insulation of the same thickness as on the vessel.

C. Exterior Finish of Insulation

1. Apply a tack coat of Benjamin Foster Tite-Fit Coating 30-35. Do not thin; apply at the rate of 4 gallons/100 square feet. Surface coverage shall be complete. Embed an 8 ounce canvas jacket into the wet tack coat. Provide adequate overlap of canvas (3 inches minimum) to accommodate shrinkage. Wherever insulation is terminated, flash at least 3 inches by embedding a 4-inch-wide strip of No. 20 open-weave white glass fabric cloth into the wet tack coat. Allow the 30-35 tack coat to dry for at least 24 hours. Apply a finish coating of Benjamin Foster Sealfas Coating 30-36 over the dry canvas at the rate of 50 square feet/gallon.

2.13 PIPING AND EQUIPMENT INSULATION FOR SEVERE SERVICE TYPE HCF OR CCF (-60° TO 800°F)

A. Insulation Materials

1. material shall be of the foamed glass type. Foam-glass insulation in the required form of flat blocks, curved segments, head segment, beveled lags, or molded sectional pipe as manufactured by Pittsburgh Corning Production.
2. for insulation thickness see Figures 2 and 3. See Equipment Drawings and/or flow diagrams for possible exceptions.

B. Application

1. Equipment drawings and flow sheets shall indicate where foamed glass insulation is required. Conditions in areas where weatherproofing, corrosive atmospheres, chemical spillage, fire resistance, etc., are of concern, shall dictate requirements.
2. Instruments and all running equipment in the work area where foamed glass is being applied are to be protected.
3. For hot application apply insulation as described in general requirements and under Type HC1 insulation. See Sections 2.3 through 2.6 with the following exceptions:
   a. One-half-inch-wide, 0.020-inch stainless-steel strapping and 14-gauge stainless-steel wire shall be used for securing insulation.
   b. A joint sealer is not required.
   c. Chicken wire shall not be used. Aluminum jacketing shall be used.

d. Voids between equipment, piping, and insulation shall be filled with Type HC2 fiberglass.
e. Piping in manholes-Condensate 1-inch thickness; Steam 2-inch minimum thickness.

4. For cold applications apply insulation as described in general requirements and under Type CC insulation, Sections 2.7 through 2.8 with the following exceptions:
   a. One-half-inch-wide, .020-feet stainless-steel strapping and 18-gauge stainless-steel wire shall be used for securing insulation.
   b. Chicken wire shall not be used. A glass-fabric membrane finish described in Section 2.6.C.1 shall be used indoors and outdoors.
   c. Voids between equipment, piping, and insulation are to be filled with Type CC polyurethane.

2.14 PIPING INSULATION FOR FREEZE PROTECTION TYPE FP (-20° TO 150°F)

A. Insulation Material

1. Material shall be fiberglass heavy density sectional pipe insulation, single layer, molded type, or approved equal. Thickness shall be 1.5 inch and shall have a vinyl factory-applied jacket.

B. Application

1. Insulation shall be installed according to the manufacturer's recommendations.
2. All piping designed for freeze protection insulation is to be traced and aboveground.
3. Insulation shall be applied over clean, dry surfaces and tracing.
4. Adjoining sections shall be butted together firmly with joints staggered.
5. All fittings, valves, and flanges shall be insulated with molded fibrous glass fitting covers (Owens-Corning Fiberglass Corp. or equal) or fabricated mitered segments of piping insulation equal in thickness to the insulation on adjoining piping. Mitered segments, where used, shall be cut accurately to assure a snug fit. The segments and covers shall be wired tightly in place using 16-gauge stainless-steel wire, or approved fiberglass reinforced tape. Fitting covers and mitered segments shall be given a smoothing layer of an approved asbestos-free insulating cement. Fittings smaller than 3 inches nominal size may be insulated with two coats of asbestos-free mineral-wool-type insulating cement.

C. Exterior Finish of Insulation

1. Outdoors -- The exterior finish of Type FP insulation outdoors shall be the same as that of Type HC1. See "Exterior Finish of Insulation" in Section 2.3.C for details. In lieu of stainless-steel bands, use 0.5-inch aluminum bands and wing seals 12 inches on center.
2. Indoors -- The exterior finish of Type FP insulation indoors shall be a factory applied all-service jacket.

2.15 EQUIPMENT INSULATION FOR FREEZE PROTECTION TYPE FP (-20° TO 150°F)

A. Insulation Materials

1. Material shall be Fiberglass FP-705 industrial insulation, unfaced, rigid board, as manufactured by Owens-Corning Fiberglass Corporation. Density shall be 6 pounds/cubic foot or 3 pounds/cubic foot with IT representative approval.
2. Thickness shall be 1.5 inch. See drawings and/or flow sheets for possible exceptions.
3. Where insulation is specified in thickness greater than 1.5 inch, it shall be installed in multiple layer applications if necessary. Moisture barrier applications shall be made on the top layer of insulation only, as noted in these specifications.

B. Applications

1. Single layer
   a. Insulation shall be applied over clean, dry surfaces. The 24-inch by 43-inch boards shall be cut or scored as necessary to fit the shape and contour of the vessel. Joints shall be staggered throughout and shall be butted tightly after they have been coated with Benjamin Foster 81-33 Fire Resistive Adhesive, 0.0625-inch thick minimum. The applied adhesive must still be tacky when sections are butted together. The 81-33 adhesive shall serve as a joint sealer only; it shall not be used as filler material at poorly fitted joints. Straight shell insulation shall be secured firmly in place by 0.5-inch by 0.020-inch stainless-steel bands spaced not more than 9 inches on centers.
   b. Vessel heads shall be insulated with cut or mitered sections set inside the overlapping side wall insulation. The overlap shall be equal to the thickness of the head insulation, to help form and hold the insulation on the heads. Field cut segments shall be accurately fitted, particularly at nozzles and manholes. Apply 81-33 adhesive as the joint sealer as described above. All voids between equipment surfaces and insulation shall be packed firmly with light density fiberglass. The head insulation shall be secured by 16-

gauge copper wire on 6-inch centers. Cables, encircling the vessel shell near both heads, shall serve as tie-points for the wire. They shall be 1/8 inch diameter, minimum, and shall be galvanized or cadmium plated steel. The wires shall be looped at all intersections to tighten the head insulation firmly. Wires and bands shall be pulled sufficiently tight so that they are set solidly in the insulation surface. Insulation shall not be applied over name-plates, but beveled off around them.

c. Nozzles shall be covered up to but not including the flanges with insulation of the same thickness as on the vessel. Legs and supports shall be insulated to a minimum of 8 inches from the main insulation surface. Check drawings for additional requirements that may be listed for insulating support legs.

d. For indoor equipment only, 1-inch chicken wire shall be wrapped tightly around the bound insulation, followed by a roughing layer of asbestos-free mineral-wool-type insulating cement (Keene Super Powerhouse or equal), and a smoothing layer of asbestos-free insulating cement. The roughing and smoothing layers shall cover the chicken wire completely. Thorough drying of the roughing layer is required.

2. Double Layers -- Application shall be similar to that described above for single layer except that:

   a. Joint sealer shall be used for the top layer of insulation only.

   b. Joints for the top layer of insulation shall be staggered with respect to the joints for the bottom layer.

   c. Chicken wire (for indoor equipment only) shall be wrapped around the bound insulation of the top layer, followed by the roughing and smoothing layers of cement.

   d. Second layer head insulation shall extend out to the top of the second layer shell insulation. Side and end joints shall be staggered over joints of preceding layer so that no two joints coincide.

   e. Insulation shall be applied at nozzles in a manner which will permit drainage and the removal of bolts.

3. Joints for both layers shall be butted tightly. The 81-33 adhesive shall serve as a joint sealer only (for the top layer of insulation); it shall not serve as a filler material for poorly fitted joints.

C. Exterior Finish of Insulation

1. Tank heads and shells outdoors -- Chicken wire wrapping and cement applications shall not be provided for outdoor equipment, unless required for cosmetic reasons. Apply a tack coat of vinyl acrylic mastic by trowel

at the rate of 4 gallons/100 square feet. Insulation must be dry before mastic application. Embed open-weave white glass fabric cloth into the wet tack coat and smooth out to avoid wrinkles. Cover with the mastic at the rate of 8 gallons/100 square feet; apply before the tack coat has set through. Complete coverage is required. Proper and complete flashing shall also be required.

2. Tank heads and shells indoors -- Apply a tack coat of Benjamin Foster Tite-Fit Coating 30-35 for vapor barrier protection. Do not thin; apply at the rate of 4 gallons/100 square feet. Surface coverage must be complete. Embed 8-ounce canvas jacket into the wet tack coat. Provide adequate overlap of canvas (3 inches minimum) to accommodate shrinkage. Seams should preferably be located behind equipment. Wherever insulation is terminated, flash at least 3 inches by embedding a 4-inch-wide strip of No. 20 open-weave glass fabric cloth into wet tack coat. Allow the 30-35 tack coat to dry for at least 24 hours. Apply a finish coat of Benjamin Foster Sealfas Coating 30-36 over the dry canvas at the rate of 50 square feet/gallon; do not thin.

PART 3 EXECUTION

3.1 INSULATION

A. Insulation shall be applied over clean, dry surfaces that are free from projections. All segments shall be butted together firmly and all vapor barriers shall be sealed against moisture penetration. The application methods shall conform to the particular instructions listed in these specifications unless otherwise indicated by the IT Corporation (IT) representative in writing.

B. The subcontractor shall be responsible for furnishing insulation of the exact dimensions to fit lines of iron pipe size or tubing size depending on the type of line to be insulated. Full thickness insulation shall be applied on piping extended through sleeves. All equipment in the work areas shall be protected from damage and from exposure to insulation dusts, powders, or pieces of insulation. Particular care shall be given to the protection of pumps, motors, and drives.

C. Insulation shall not be applied to ductwork, piping, or equipment until all testing has been completed.

D. Troweling of mastics and application of adhesives or Armstrong Insulcolor shall not be performed below 40°F without prior written approval of the IT representative. Fill all joints and seams to form smooth surface.

E. All materials shall be installed in a neat and workmanlike manner, and shall be installed in strict accordance with the manufacturer's recommendations.

F. Insulation on valves, fittings, flanges (including equipment flanges), piping appurtenances, etc., shall be of equal thickness and insulation value to that installed on adjoining pipe. Cover all valves (generally up to packing gland), strainer bodies, flanges, and flash tanks. Insulation for ball valves and plug cocks shall not cover the travel stop pin. Care shall be taken to ensure that all working parts of valves and other mechanical equipment are protected when insulation is applied.

G. All sensing devices, gauges, instruments, relief valves, and other devices that require periodic calibration or maintenance shall be insulated in a manner so that it can be maintained from outside the insulation or the insulation applied in a manner that it can be temporarily removed when maintenance is required.

H. For tubing or cable traced lines, long lag insulation is preferred.

3.2 EQUIPMENT INSULATION

A. Manholes and handholds of equipment requiring insulation shall be provided with removable covers. Removable covers may be fabricated from segments of block insulation or from preformed sectional pipe covering and premolded components. A removable cover shall be of the same material as the adjoining pipe insulation.

B. Insulated vessels supported on skirts shall be insulated over the entire exterior of the skirt.

3.3 JOINTS

A. Expansion and contraction joints shall be provided for the differential expansion or contraction between the insulation and insulated surface operating at a temperature of 350°F and above, and 0°F and below, respectively.

B. All joints of double layer preformed sections in block insulation shall be staggered.

C. All unavoidable voids between sections of insulation shall be filled with asbestos-free mineral wool for hot applications and fiberglass for cold applications.

D. Staples shall not be used to secure insulating materials having vapor barrier jackets. All openings, joints, laps, and end strips on insulation specified with a vapor barrier shall be sealed against moisture penetration with the vapor barrier cemented in place with adhesive.

3.4 INSULATION SUPPORTS

A. Tanks, towers, and other vessels shall be provided with attachments suitable for supporting the insulation. They shall consist of rings, clips, angles, studs, etc.

B. Insulation on vertical lines shall be supported by attaching a support ring to the piping at a maximum spacing of 20 feet. The support ring shall be cut from steel plate.

3.5 INSPECTION

A. Inspection of all phases of the installation will be made at random by the IT insulation inspector. Any work that is not in accordance with this specification or not installed in a neat, workmanlike appearance will be noted. Any rework required to have the installation comply with this specification will be solely at the insulation subcontractor's expense.

-End of Section-

ATTACHMENT A

FIGURES

Figure 1 - Insulation Thickness, Types HC1, HC2, and PP1 Insulation

Figure 2 - Insulation Thickness, Type HCF

Figure 3, Insulation Thickness, Type CCF

Type HC1, HC2, & PP1 Insulation (Nominal Thickness, Inches)																			
	Fluid Temperature, Inches																		
Nom. Pipe Size, Inches	Up to 175	175 to 225	226 to 275	276 to 325	326 to 375	376 to 425	726 to 475	476 to 525	526 to 575	576 to 625	626 to 675	676 to 725	726 to 775	776 to 825	826 to 875	876 to 900	901 to 1000	1001 to 1100	1101 to 1200
1/2"																			
3/4"																			
1"			1"																
1-1/2"																			
2"													1- 1/2"						
2-1/2"																			
3"																			
4"																			
6"													2"						
8"																			
10"																			
12"													2- 1/2"						
14"																			
16"															3"				
30" to Up																			
Vessel & Equip															3- 1/2"		4"		
Type PP1	1"											1- 1/2"					2"		2-1/2"

Note: For operating temperatures in excess of 900°F, insulation shall be double layer construction. For 2" and larger lines, in accordance with the following table:

Total Insulation Thickness	Layer Thickness
2"	1" inside, 1" outside
2-1/2"	1" inside, 1-1/2" outside
3"	1-1/2" inside, 1-1/2" outside
3-1/2"	1-1/2" inside, 2" outside
4"	2" inside, 2" outside

FIGURE 1
INSULATION THICKNESS, TYPES HC1, HC2, AND PP1 INSULATION

Type HCF Molded and Block Insulation Cellular Glass for Hot Piping and Equipment Nominal Thickness, Inches							
	Fluid Temperature - Degrees Fahrenheit						
Nom. Pipe Size, Inches	50 to 300	301 to 400	401 to 500	501 to 600	601 to 700	701 to 800	
1/2"							
3/4"							
1"		1"			2"	2-1/2"	
1-1/2"							
2"			1-1/2"		2-1/2"		
3"							
4"			2"	2-1/2"	3"		
6"							
8"						3-1/2"	
10"	1-1/2"	2"					
12" to 36"							
36" to 48"			2-1/2"	3"	3-1/2"	4"	
Over 48"							
Vessel & Equip							

Note: Through 24" diameter, use molded pipe insulation. Above 24" diameter, use segmented block, shaped to fit contour.

FIGURE 2

INSULATION THICKNESS, TYPE HCF

Type CCF Molded and Block Insulation Cellular Glass for Cold Piping and Equipment Nominal Thickness, Inches							
	Fluid Temperature - Degrees Fahrenheit						
Nom. Pipe Size Inches	50 to 40	39 to 20	19 to 0	-1 to -20	-19 to -40	-39 to -60	
1/2"	1"		1-1/2"				
1"			2"			2-1/2"	
1-1/2"		1-1/2"		2-1/2"	3"		
2"							
3"							
4"							
6"				3"	3-1/2"		
8"			2-1/2"			4"	
10"							
12"							
14"					4"	4-1/2"	
16"				3-1/2"			
18"							
20"							
24"			3"				
30"							
Over 30"				4"	4-1/2"	5-1/2"	
Vessel & Equip							

Note: All insulation for lines 2" and up shall be double layer construction. Layers shall be equally thick or, if the total thickness cannot be divided equally, the outer layer shall be 1/2" thicker than the inside layer.

FIGURE 3

INSULATION THICKNESS, TYPE CCF

SECTION 15620

PACKAGED WATER CHILLER

PART 1 GENERAL

1.1 SECTION INCLUDES

A. Chiller package.
B. Charge of refrigerant and oil.
C. Controls and control connections.
D. Chilled water connections.
E. Condenser water connections.
F. Refrigerant connections.
G. Auxiliary water connections.
H. Starters.

1.2 RELATED SECTIONS

A. Section 09900- Painting, General.
B. Section 13310 - Noise Level Specification.
C. Section 15050 - Piping and Accessories.
D. Section 15080 - Piping Specialties.
E. Section 15170 - Motors.
F. Section 15712 - Cooling Towers.
G. Division 16 - Electrical

1.3 REFERENCES

A. ARI 590 - Standard for Reciprocating Water-Chilling Packages.
B. ASME SEC 8 - Boiler and Pressure Vessel Code.
C. ASHRAE 15 - Safety Code for Mechanical Refrigeration.
D. NEMA MG1 - Motors and Generators.
E. UL 465 - Central Cooling Air Conditioners.
F. ABMA 9 - Load Ratings and Fatigue for Ball Bearings.

1.4 SYSTEM DESCRIPTION

A. Design Requirements
The packaged water chiller system will be required to provide chilled water to the contact scrubber secondary heat exchanger.

1.5 SUBMITTALS

A Shop Drawings: Indicate components, assembly, dimensions, weights and loadings, required clearances, and location and size of field connections. Indicate valves, strainers, and thermostatic valves required for complete system.

B Product Data: Provide rated capacities, weights, specialties and accessories, electrical requirements and wiring diagrams.

C Submit manufacturer's installation instructions.

D Manufacturer's Certificate: Certify that components of package not furnished by manufacturer have been selected in accordance with manufacturer's requirements.

E. Operation and Maintenance Data: Include start-up instructions, maintenance data, parts lists, controls, and accessories. Include trouble- shooting guide (10 copies).

1.6 QUALITY ASSURANCE

A. Manufacturer Qualifications: Company specializing in manufacturing the Products specified in this section with minimum five years documented experience.

1.7 DELIVERY, STORAGE, AND PROTECTION

A. Comply with manufacturer's installation instructions for rigging, unloading, and transporting units.

B. Protect units from physical damage.

1.8 WARRANTY

A. Provide a 1 year labor and materials warranty to include coverage for the complete assembly and a five year labor and materials warranty on the compressor.

PART 2 PRODUCTS

2.1 MANUFACTURERS

A. Dunham Bush
B. Approved Equal.

2.2 MANUFACTURED UNITS

A. Provide factory assembled and tested water cooled liquid chillers consisting of compressors, condensers, evaporator, thermal expansion valve, refrigeration accessories, and control panel. Construction and ratings shall be in accordance with ARI 590.

B. Conform to UL 465 code for construction of reciprocating water chillers and provide UL label.

C. Conform to ASME SEC 8 Boiler and Pressure Vessel Code for construction and testing of reciprocating water chillers.

D. Conform to ASHRAE 15 code for construction and operation of reciprocating water chillers.

2.3 HERMETIC COMPRESSORS

A. Reciprocating Compressors:
   1. Unit: Hermetically sealed motor-compressor with crankcase heater, suction and discharge service valves, rubber-in-shear isolators, and control panel.
   2. Motor: Constant speed 3600 rpm, suction gas cooled with overheating protection.
   3. Crankcase Heater: Energize when compressor is not operating.
   4. Controls: Factory wired for crankcase heater, terminal strip for connection to power with electronic protection module incorporating overload and single phase protection, high discharge temperature, and anti-recycling timer.

B. Scroll Compressors:
   1. Unit: Direct drive, hermetic, 3600 RPM, fixed compression, scroll motor-compressor with control panel.
   2. Features: Centrifugal oil pump, sump oil heater, oil level sight glass, oil charging valve, two point lubrication for each motor bearing, flooded lubrication for the journal and thrust bearings, check valve on scroll discharge port.
   3. Motor: Suction gas cooled, hermetically sealed, squirrel cage induction.
   4. Control panel: Factory mounted panel with separate starter and refrigeration control sections:

      a. Starter section:
         1. Non-fused molded case disconnect switch.
         2. Single point power connection and grounding lug.
         3. Control power transformer with fuse.
         4. Solid state overload relay for each compressor.

5. Phase loss/reversal monitor.
6. Cycle counter and hour meter per compressor.

b. Refrigeration section:
1 Anti-recycle timer.
2. Reset relay.
3. Reset switch.
4. Low and high pressure control.
5. Motor winding temperature protection.

c. Manual reset for compressor overload, high motor temperature, and low and high refrigerant pressure.

2.4 SEMI-HERMETIC COMPRESSORS

A. Reciprocating Compressors:

1. Unit: Serviceable hermetic reciprocating motor-compressor with positive displacement oil pump lubrication system, crankcase heater, suction inlet screen, discharge service valves, and control panel.
2. Automatic Capacity Reduction Equipment: Suction valve unloaders with lifting mechanism solenoid or gas pressure operated. Provide for unloaded compressor start.
3. Motor: Constant speed 1800 rpm, suction gas cooled with electronic overheating protection in each phase, reduced voltage starting.
4. Crankcase Heater: Energize when compressor is not operating.
5. Controls:
   a. Control Panel: Factory wired, steel, containing power and control wiring, factory wired for single point power connection.
   b. Starter: Full winding, with manual reset current overload protection, starter relay, control power transformer, terminal strip for connection to interface equipment.
   c. Safety Controls: Manually reset, adjustable high and low pressure cutouts, low oil pressure cutout.
   d. Panel Face: Compressor run light, start-stop switch, circuit breaker, demand limit switch, elapsed time meter, crankcase heater start-stop switch and light.

B. Crew Compressors:

1. Unit: Direct drive, semi-hermetic 3600 RPM, fixed compression, rotary screw compressor with control panel.
2. Features: Differential refrigerant pressure oil pump, oil heater, oil separator and filter, oil charging valve.
3. Motor: Suction gas cooled, hermetically sealed, squirrel cage induction.
4. Control panel: Factory mounted NEMA 4 panel with starter and refrigeration controls including:
   a. Non-fused molded case disconnect switch.
   b. Single point power connection and grounding lug.
   c. Anti-recycle timer.

d. Solid state overload relay for each compressor.
e. Phase loss/reversal monitor.
f. Cycle counter and hour meter per compressor.
g. Low and high pressure control.
h. Automatic shutdown compressor overload and low and high refrigerant pressure.

5. Automatic Capacity Reduction: Continuously variable slide valve with infinitely variable control to 25 percent of full load.

2.5 OPEN COMPRESSORS

A. Reciprocating Compressors:
1. Unit: Serviceable hermetic reciprocating motor-compressor with positive displacement oil pump lubrication system, crankcase heater, suction inlet screen, discharge service valves, and control panel.
2. Automatic Capacity Reduction Equipment: Suction valve unloaders with lifting mechanism solenoid or gas pressure operated. Provide for unloaded compressor start.
3. Motor: Constant speed 1800 rpm, suction gas cooled with electronic overheating protection in each phase, reduced voltage starting.
4. Crankcase Heater: Energize when compressor is not operating.
5. Controls:
   a. Control Panel: Factory wired, steel, containing power and control wiring, factory wired for single point power connection.
   b. Starter: Full winding, with manual reset current overload protection, starter relay, control power transformer, terminal strip for connection to interface equipment.
   c. Safety Controls: Manually reset, adjustable high and low pressure cutouts, low oil pressure cutout.
   d. Panel Face: Compressor run light, start-stop switch, circuit breaker, demand limit switch, elapsed time meter, crankcase heater start-stop switch and light.

B. Screw Compressors:
1. Unit: Direct drive, open drive, 3600 RPM, fixed compression, rotary screw compressor with control panel.
2. Features: Differential refrigerant pressure oil pump, oil heater, oil separator and filter, oil charging valve, compressor bearings with ABMA 9 L10 life expectancy at 100,000 hours.
3. Motor: Open drip proof flange squirrel cage induction, close coupled to compressor.
4. Control panel: Factory mounted NEMA 4 panel with starter and refrigeration controls including:
   a. Non-fused molded case disconnect switch.
   b. Single point power connection and grounding lug.

c. Anti-recycle timer.
d. Solid state overload relay for each compressor.
e. Phase loss/reversal monitor.
f. Cycle counter and hour meter per compressor.
g. Low and high pressure control.
h. Automatic shutdown compressor overload and low and high refrigerant pressure.

5. Automatic Capacity Reduction: Continuously variable slide valve with infinitely variable control to 25 percent of full load.

2.6 EVAPORATOR

A. Provide evaporator of shell and tube type, seamless or welded steel construction with cast iron or fabricated steel heads, seamless copper tubes or red brass tubes with integral fins, rolled or silver brazed into tube sheets.

B. Design, test, and stamp refrigerant side for 225 psig (1550 kPa) working pressure and water side for 150 psig (1034 kPa) working pressure, in accordance with ASME SEC 8.

C. Insulate with 0.75 inch (20 mm) minimum thick flexible [expanded polyvinyl chloride] insulation with maximum K value of 0.26.

D. Provide water drain connection and thermometer wells for temperature controller and low temperature cutout.

2.7 CONDENSERS

A. Provide condensers of shell and tube type, seamless or welded steel construction with cast iron or fabricated steel heads, seamless copper tubes or red brass tubes with integral fins, rolled or silver brazed into tube sheets.

B. Design, test, and stamp refrigerant side for 450 psig (3100 kPa) working pressure in accordance with ASME SEC 8.

C. Provide integral subcooler circuit.

D. Provide 450 psig (3100 kPa) safety relief valve on condenser shell.

E. Design, test, and stamp water side for 150 psig (1034 kPa) working pressure in accordance with ASME Pressure Vessel Code.

2.8 REFRIGERANT CIRCUIT

A. Provide refrigerant circuits, factory supplied and piped.

B. Provide for each refrigerant circuit:
1. Liquid line solenoid valve.
2. Filter dryer (replaceable core type).
3. Liquid line sight glass and moisture indicator.
4. Thermal expansion for maximum operating pressure.
5. Charging valve.
6. Insulated suction line.
7. Discharge line check valve.
8. Compressor discharge service valve.
9. Pressure relief device.

2.9 CONTROLS

A. Locate near chiller, mount steel control panel, containing starters, power and control wiring, molded case disconnect switch, factory wired with single point power connection.

B. For each compressor, provide across-the-line starter, non-recycling compressor overload, starter relay, and control power transformer or terminal for controls power. Provide manual reset current overload protection.

C. Provide devices on control panel face:
1. Compressor run lights.
2. System start-stop switch.
3. Control power fuse of circuit breaker.
4. Compressor lead-lag switch.
5. Demand limit switch.

D. Provide safety controls with indicating lights arranged so any one will shut down machine and require manual reset:
1. Low chilled water temperature switch.
2. High discharge pressure switch for each compressor.
3. Low suction pressure switch for each compressor.
4. Oil pressure switch.
5. Flow switch in chilled water line.
6. Flow switch in condenser water line.
7. Relay for remote mounted emergency shut-down.

E. Provide operating controls:
1. Multi-step chilled water temperature controller which cycles compressor and activates capacity controls with remote thermostat.
2. Five minute off timer prevents compressor from short cycling.
3. Part winding start timer.
4. Periodic pump-out timer to pump down on chilled water flow and high evaporator refrigerant pressure.

5. Solenoid valve between heat recovery condenser and receiver to limit refrigerant level in condenser.
6. Load limit thermostat to limit compressor loading on high return water temperature.
7. Three phase monitor to protect unit by stopping compressor on phase loss, phase reversal, phase unbalance, or under voltage.
8. Hot gas bypass sized for minimum compressor loading, bypasses hot refrigerant gas to evaporator.
9. Cycle counter and operating hour meter.

F. Provide pre-piped gage board with pressure gages for suction and discharge refrigerant pressures, and oil pressures for each compressor.

G. Provide alarm package with test button and indicating lights which indicate control circuit is energized and compressor is running, and will sound an audible alarm and light an indicating light upon detection of compressor malfunction, low chilled water temperature, or evaporator water flow failure.

2.10 PERFORMANCE

A. Water Cooled Water Chillers:
1. Refrigeration Capacity: 210 tons.
2. Chilled Water Delivery: 350 gpm estimated.
3. Chilled Water delivery Temperature: 44 degrees F.
4. Water head loss thru evaporator: TBD feet.
5. Evaporator Fouling Factor: 0.0005.
6. Condenser Water Delivery: 600 gpm estimated.
7. Condenser Water delivery Temperature: 85 degrees F.
8. Water head loss thru condenser: TBD feet.
9. Condenser Fouling Factor: 0.0005.
10. Refrigerant: HCFC-22.
11. Saturated Suction Temperature: TBD degrees F.
12. Power Input: TBD kW.

B. Conform to ARI 590 code for testing and rating of reciprocating water chillers.

2.11 ELECTRICAL CHARACTERISTICS AND COMPONENTS

A. Electrical Characteristics:
1. TBD kW TBD rated load amperes.
2. 460 volts, three phase, 60 Hz.
3. TBD amperes maximum circuit breaker size.0
4. TBD percent minimum power factor at rated load.

B. Motor: Refer to Section 15170.

C. Disconnect Switch: Factory mount disconnect switch in control panel.

PART 3 EXECUTION

3.1 INSTALLATION

A. Install in accordance with manufacturer's instructions.

B. Align chiller on concrete foundations, sole plates, and sub-bases. Level, grout, and bolt in place.

C. Provide connections to chilled water piping. Refer to Section 15050.
1. On inlet, provide:
   a. Thermometer well for temperature controller.
   b. Thermometer.
   c. Strainer.
   d. Flow switch.
   e. Flexible pipe connecter.
   f. Pressure gage.
   g. Shut-off valve.
2. On outlet, provide:
   a. Thermometer.
   b. Flexible pipe connecter.
   c. Pressure gage.
   d. Balancing valve.

D. Furnish and install necessary auxiliary water piping for oil cooling units and purge condensers.

E. Provide connection to condenser water piping. Refer to Section 15050.
1. On inlet, provide:
   a. Thermometer well for temperature limit controller.
   b. Thermometer.
   c. Strainer.
   d. Flow switch.
   e. Flexible pipe connecter.
   f. Pressure gage.
   g. Shut-off valve.
2. On outlet, provide:
   a. Thermometer.
   b. Flexible pipe connecter.
   c. Pressure gage.
   d. Balancing valve.

F. Arrange piping for easy dismantling to permit tube cleaning.

G. Provide piping from chiller safety relief valve to outdoors. Size as recommended by manufacturer.

3.2 MANUFACTURER'S FIELD SERVICES

A. Supply service of factory trained representative for a period of 2 days to supervise testing, dehydration and charging of machine, start-up, and instruction on operation and maintenance to Owner.

B. Supply initial charge of refrigerant and oil.

3.3 DEMONSTRATION AND INSTRUCTIONS

A. Demonstrate system operations and verify specified performance.

3.4 SCHEDULES

Drawing Code	RCH-1	RCH-2	RCH-3
Location			
Manufacturer			
Model Number			
Cooling Capacity			
Evaporator			
Water Flow			
Entering Water Temperature			
Leaving Water Temperature			
Pressure Drop			
Fouling Factor			
Condenser			
Type			
Water Flow			
Entering Water Temperature			
Leaving Water Temperature			
Pressure Drop			
Fouling Factor			
Entering Air Temperature			
Condensing Temperature			
Heat Recovery Condenser			
Type			
Water Flow			
Entering Water Temperature			
Leaving Water Temperature			
Pressure Drop			
Fouling Factor			
Compressor			

Number
Steps Unloading
RPM
Starter Type

-End of Section-

SECTION 15712

COOLING TOWERS

PART 1 GENERAL

1.1 SECTION INCLUDES

A. Cooling tower.
B. Controls.
C. Ladder and handrails.

1.2 RELATED SECTIONS

A. Section 09900 - Painting General

B. Section 13310 - Noise Level Specification

C. Section 15050 - Piping and Accessories

D. Section 15080 - Piping Specialties

E. Section 15150 - General Pumps

F. Section 15170 - Motors.

G. Section 15620 - Packaged Water Chillers.

H. Division 16 - Electrical.

1.3 REFERENCES

A. ABMA 9 - Load Rating and Fatigue Life for Ball Bearings.

B. ABMA 11 - Load Rating and Fatigue Life for Roller Bearings.

C. ASME PTC-23 - Atmospheric Water-Cooling Equipment.

D. Cooling Tower Institute (CTI) ATC-105 - Acceptance Test Code for Water Cooling Towers.

E. Cooling Tower Institute (CTI) - Certification Standard STD-201.

F. IEEE - Institute of Electrical and Electronics Engineers

G. ANSI - American National Standards Institute

H. OSHA - Occupational Safety and Health Association

I. ASTM - American Society for Testing Materials

J. NEMA - National Electrical Manufacturers Association

K. AWS - American Welding Society

L. UL - Underwriters Laboratories

M. NEC - National Electric Code

1.4 PERFORMANCE REQUIREMENTS

A. The cooling tower system is designed to provide cooling to several heat exchangers in the process. Cooling water will be provided to the Contact Scrubber Heat Exchanger (E-5002), the Contact Scrubber Secondary Heat Exchanger (E-5003), and to the Contact Scrubber Recirculation Chiller (Z-5001) that provides cooling to the Contact Scrubber Secondary Heat Exchanger in the warm months. The system consists of the following components:
   1. Cooling tower with fan and motor.
   2. Basin with level control.
   3. Control panel.

1.5 SUBMITTALS

A. Shop Drawings: Indicate suggested structural steel supports including dimensions, sizes, and locations for mounting bolt holes.

B. Product Data: Provide rated capacities, dimensions, weights and point loadings, accessories, required clearances, electrical requirements and wiring diagrams, and location and size of field connections. Submit schematic indicating capacity controls.

C. Submit manufacturer's installation instructions.

D. Manufacturer's Certificate: Certify that cooling tower performance, based on CTI ATC-105, CTI STD-201 or ASME PTC-23, meet or exceed specified requirements, and submit performance curve plotting leaving water temperature against wet bulb temperature.

E. Operation and Maintenance Data: Include start-up instructions, maintenance data, parts lists, controls, and accessories.

F. Spare Part Lists: One year operation spare parts list, and five year operation spare parts list.

1.6 QUALITY ASSURANCE

A. Manufacturer Qualifications: Before shipment the manufacturer shall conduct a comprehensive shop performance test on the entire system just as it will be used in the field. The system shall not be shipped until it is proven to function correctly. Complete documentation shall be provided as proof of the inspection and performance test. The documentation shall be signed and dated.

B. The manufacturer shall have full responsibility for compliance with the requirements of the specifications contained herein. Before shipment the manufacturer shall conduct a thorough inspection of all equipment. Any inconsistencies must be corrected before shipment.

1.7 REGULATORY REQUIREMENTS

A. Products Requiring Electrical Connection: Listed and classified by Underwriters Laboratories Inc. and suitable for the purpose specified and indicated.

1.8 DELIVERY, STORAGE, AND PROTECTION

A. Factory assemble entire unit. For shipping, disassemble into large sub-assemblies to minimize field work required for re-assembly.

B. Comply with manufacturer's installation instructions for rigging, unloading, and transporting units.

1.9 WARRANTY

A. The cooling tower manufacturer shall certify that the tower supplied will meet the specified performance conditions when the tower is installed according to plans. If, because of a suspected thermal performance deficiency, the Owner chooses to conduct an on-site thermal performance test under the supervision of a qualified, disinterested third party in accordance with CTI or ASME standards during the first year of operation; and if the tower fails to perform within the limits of the test tolerance; then the cooling tower manufacturer will pay for the cost of the test and will make such corrections as are appropriate and agreeable to the Owner to compensate for the performance deficiency.

B. Provide a five year warranty labor and materials to include coverage for corrosion resistance of cooling tower structure, cooling tower package, fan drive, and motor.

1.10 LABELING

A. Provide label(s) with the following information:

Drawing Code	CT-1	CT-2	CT-3	CT-4
Location				
Manufacturer				
Model Number				
Cooling Capacity				
Water Flow Rate				
Entering Water Temp				
Leaving Water Temp				
Entering Air WB Temp				
External Static Pressure				
Number of Fan Motors				
Motor Size				
Heaters No. and Type				

PART 2 PRODUCTS

2.1 MANUFACTURERS

A. Baltimore Air Coil
B. Marley
C. Imeco
D. Substitutions: With IT approval.

2.2 MANUFACTURED UNITS

A. Provide units for outdoor use, factory assembled, sectional, cross flow, vertical discharge, induced draft type, with sump, fan, surface sections, drift eliminators, and motor.

2.3 STEEL TOWERS

A. Framework and Casing: Galvanized steel with sheets installed vertically with waterproof flanges.

B. Louvers: Corrugated glass reinforced polyester.

C. Fan: Multi blade, cast aluminum fixed pitch, axial type.
   1. Drive: Geared, right angle drive with ABMA 9 or ABMA 11 L-10 life expectancy of 40,000 hours bearings and drive shaft equipped with non-lubricated flexible couplings.
   2. Motor: Two speed (1800/900 rpm) with special moisture protection, mounted on welded steel frame in fan deck. Refer to Section 15170.
   3. Drive shaft: One piece, non lubricate, full floating design with stainless steel shaft and bushings.

D. Fan Cylinder: One piece, welded steel, hot dipped galvanized fan assembly.

E. Fan Guard: One piece, welded steel rod and wire guard, hot dipped galvanized after fabrication.

F. Access: Large access doors at both ends of tower to eliminators and air plenum.

G. Safety: Safety railings, and ladder with safety cage from grade to fan deck.

H. Distribution Basin: Open, gravity type distribution basin utilizing weirs and plastic metering orifices, with flow control valves.

I. Fill: Self supporting fluted polyvinyl chloride plastic.

J. Drift Eliminators: Two or three pass polyvinyl chloride plastic to limit drift loss to a maximum of 0.1 percent of total water circulated.

K. Collection Basin: Galvanized steel with depressed center section, designed to support tower, with cleanout and drain fitting, 8 gage (4 mm), 1/4 inch (7 mm) mesh strainer, side outlet sump, overflow.

L. Float Valves: Brass or bronze balanced piston type make-up valve with plastic or copper float.

M. Hardware, nuts, bolts, and washers: Galvanized steel.

N. Finish: Steel components shall be G210 hot dipped galvanized steel.

O. Accessories
   1. Electric Immersion Heaters: In collection basin; suitable to maintain temperature of water in basin at 42 degrees F (5 degrees C) when outside temperature is 0 degrees F (-17 degrees C) and wind velocity is 15 mph (25 kph); immersion thermostat and low level control to operate heaters on low temperature.

2. Vibration Cut Out Switch: Mechanical equipment shall be provided with a vibration cut out switch to protect against damage due to excessive vibration

2.4 PERFORMANCE

A. Capacity:
   1. Water Flow: 6,000 gpm.
   2. Entering Water Temperature: 95 degrees F.
   3. Leaving Water Temperature: 85 degrees F.
   4. Entering Air WB Temperature: 78 degrees F.

B. External Static Pressure: 216 inch wg.

2.5 ELECTRICAL CHARACTERISTICS AND COMPONENTS

A. Electrical Characteristics:
   1. 100 HP (estimated).
   2. 480 volts, three phase, 60 Hz.

B. Motor: Refer to Section 15170.

C. Disconnect Switch: Factory mount disconnect switch in control panel.

PART 3 EXECUTION

3.1 INSTALLATION

A. Install in accordance with manufacturer's instructions.

B. Connect condenser water piping with flanged connections to tower. Pitch condenser water supply to tower and condenser water suction away from tower. Refer to Section 15050.

C. Connect make-up water piping with flanged or union connections to tower. Pitch to tower. Refer to Section 15050.

D. Connect overflow, bleed, and drain, to storm sewer.

3.2 FIELD QUALITY CONTROL

A. Test for capacity under actual operating conditions in accordance with CTI ATC-105 and verify specified performance.

3.3 MANUFACTURER'S FIELD SERVICES

A. Inspect tower after installation and submit report prior to start-up, verifying installation is in accordance with specifications and manufacturer's recommendations.

B. Supervise rigging, hoisting, and installation.

C. Start-up tower in presence of and instruct Owners operating personnel.

-End of Section-

SECTION 15750

GAS STREAM REHEATER

PART 1 GENERAL

1.1 SECTION INCLUDES

A. Gas Stream Reheater to bring the relative humidity of the exhaust of wet electro-static precipitator well below saturation upstream of a HEPA filtration system.

1.2 RELATED SECTIONS

A. Section 09900 - Painting General
B. Section 13200 - General Tanks and Vessels
C. Division 16 - Electrical.

1.3 REFERENCES, CODES, AND STANDARDS

A. American Society of Mechanical Engineers (ASME) :
   1. ASME Boiler and Pressure Vessel Code (BPVC), Section IX.

B. American Society for Testing and Materials (ASTM):
   1. ASTM A36/A36M Standard Specification for Structural Steel.

C. American Welding Society (AWS):

D. Uniform Building Code (UBC).

1.4 SYSTEM DESCRIPTION

A. Design Requirements
The Gas reheater will be required to increase the bulk gas stream temperature from approximately 80°F to 110°F to bring the relative humidity of the gas stream to approximately 43%.

1.5 SUBMITTALS

A. Shop Drawings: Indicate dimensions; sizes; weights and point loadings; material thickness, and locations, sizes.

B. Product Data: Provide data indicating rated capacities and accessories.

C. Manufacturer's Installation Instructions: Indicate assembly and installation instructions sufficient to facilitate efficient assembly.

D. Design Calculations: For material thickness and supports for wind, seismic and snow loadings, for determination of diameters and entry dimensions, for evaluation of wear and erosion in cylinders, for determination of effective number of turns prior to discharge.

E. Operation and Maintenance Data: Include operation and maintenance instructions and spare parts list (10 copies).

F. Certificate: Certify that the equipment meets or exceeds the requirements of this specification.

G. Spare parts list for 1-year and 5-year operation.

1.6 DELIVERY, STORAGE AND HANDLING

A. Store in a clean, dry place and protect from weather prior to shipment. Provide protection from weather and damage during transient.

B. Loose items, if any, shall be tagged and delivered in a standard commercial package.

1.7 WARRANTY

A. Warranty: The gas stream reheater shall be warranted by the manufacturer including parts and labor.

PART 2 PRODUCTS

2.1 EQUIPMENT

A. Manufacturers
1. Farnam Custom Products.
2. Reheat Co., Inc.
3. Thermal Circuits
4. Industrial Engineering & Equipment Co. (INDEECO)

B. Process off gases consisting of air, water vapor and trace concentrations of particulate and organic compounds will exit a wet electro-static precipitator saturated at the exit temperature. The gas stream is to be treated by passing through a HEPA filtration system and carbon bed. Prior to passing through the HEPA, the gas stream must be reheated above the dew point so that condensation will not occur on the HEPA surfaces. However, the carbon bed is to remove radon from the gas stream after passing through the HEPA. The collection efficiency of the carbon bed will decrease as the gas stream temperature increases. Therefore, the gas stream temperature must be controlled within a narrow range.

The gas stream reheater shall be electrically heated. The outlet shall be equipped with an electronic hygrometer to monitor the relative humidity of the gas stream. The Reheater shall be explosion proof. Heater elements shall be coated with an inert material such as ceramic.

The reheater housing shall be designed for access to allow cleaning of element surfaces.

C. Materials: Manufacturer's selection of interior materials shall be consistent with this application. Exterior parts shall be carbon steel or approved substitute. Flanged connections shall be 150 lb class. Structural steel supports shall be in accordance with ASTM A36/A36M.

D. Welding: Shall be in accordance with ASME BPVC Section IX and AWS.

E. Performance Requirements -

1. System shall be suitable for continuous operation
2. The Reheater shall provide at a minimum, the capability to increase the bulk temperature of the gas stream by 30°F.
3. Inlet Conditions:
   a. Process rate of 30 tons/hr into dryer will result in a gas stream:

1)	Mass flow rate:	15,100 lbs/hr
	i. oxygen	3350 lbs/hr
	ii. nitrogen	11200 lbs/hr
	iii. water vapor	340 lbs/hr
2)	Temperature:	80°F
3)	Flowrate	3,700 ACFM @ 80°F
4)	Volatile Organic Rate:	100 lbs/hr

4. Outlet Conditions

a. Temperature increase:	30°F
b. Pressure drop across system:	not to exceed 2 in. w.c. @ 3,500 ACFM
c. Relative Humidity	<45% max.

5. Design Pressure: -60 in. w.c.
6. Heat Generation Rate: 115,000 Btu/hr minimum 33,700 watts

F. All equipment shall be provided with lifting and hold down lugs.

G. Static pressure taps shall be provided to check the pressure drop across the system and calibrate the control system pressure transducers.

H. Equipment/structural design shall provide for loads as specified below:

1. Platforms and walkways, live load: 75 psf.
2. Wind load: 80 mph basic wind speed

Exposure "C"
Importance Factor 1.15.

3. Seismic load: Use provisions of the Uniform Building Code, using Seismic Zone 1 and Importance Factor 1.25. W (total seismic load) shall include all normal operating contents, piping and attachments.
4. Shop drawings shall state the vertical loads and lateral forces used (wind and seismic) in the design.

2.2 FABRICATION

A. Prior to shipment, the equipment shall be cleaned of all dirt, dust, grease, grime, weld spatter, and other foreign materials. All burrs and sharp edges shall be ground smooth. Exterior surfaces of steel components shall be primed and painted in accordance with the manufacturer's standard finish. Open-end connections shall be sealed to prevent the entrance of foreign material.

2.3 LABELING

A. Each item shall have a manufacturer's standard nameplate permanently attached at a location which is easily readable. The nameplate shall contain the following information, as applicable:
1. Item description.
2. Item number/tag number.
3. Manufacturer's name.
4. Purchase order number.
5. Date of manufacture.
6. Capacity.

PART 3 EXECUTION

3.1 ERECTION/INSTALLATION

A. Install equipment in accordance with manufacturer's instructions and design drawings.

3.2 FIELD QUALITY ASSURANCE

A. Tests: Perform leak testing to ensure that there are no air leaks into the reheater system. Perform pressure drop and temperature rise testing across the system to insure conformance with this specification. If the results are unsatisfactory, the Subcontractor shall adjust or replace the equipment to meet the specification requirements and retest the equipment.

-End-of-Section

SECTION 15751

CONTACT SCRUBBER HEAT EXCHANGER

PART 1 GENERAL

1.1 SECTION INCLUDES

A. Shell and tube type heat exchanger.
B. Accessories and trim.

1.2 RELATED SECTIONS

A. Section 09900 - Painting General
B. Section 13200 - General Tanks and Vessels
C. Section 13201 - ASME Code Tanks and Vessels

1.3 REFERENCES, CODES, AND STANDARDS

A. American Society of Mechanical Engineers (ASME) :
   1. ASME Boiler and Pressure Vessel Code (BPVC), Section IX.

B. American Society for Testing and Materials (ASTM):
   1. ASTM A36/A36M Standard Specification for Structural Steel.

C. American Welding Society (AWS):

1.4 SYSTEM DESCRIPTION

A. Design Requirements
   1. The heat exchanger will be required to lower the temperature of the contact scrubber recirculation from 200 or 170 degrees F to 85 degrees F.

1.5 SUBMITTALS

A. Shop Drawings: Indicate dimensions; sizes; weights and point loadings; material thickness, and locations, sizes.

B. Product Data: Provide data indicating rated capacities and accessories.

C. Design Data: Indicate in sufficient detail to verify that heat exchanger meet or exceed specified requirements.

D. Manufacturer's Installation Instructions: Indicate assembly and installation instructions sufficient to facilitate efficient assembly.

E. Design Calculations: For material thickness and supports for wind, seismic and snow loadings, for determination of diameters and entry dimensions, for evaluation of wear and erosion in cylinders, for determination of effective number of turns prior to discharge.

F. Operation and Maintenance Data: Include operation and maintenance instructions and spare parts list (10 copies).

G. Certificate: Certify that the equipment meets or exceeds the requirements of this specification.

1.6 DELIVERY, STORAGE AND HANDLING

A. Store in a clean, dry place and protect from weather prior to shipment. Provide protection from weather and damage during transient.

B. Loose items, if any, shall be tagged and delivered in a standard commercial package.

1.7 WARRANTY

A. Warranty: The heat exchanger shall be warranted by the manufacturer including parts and labor.

PART 2 PRODUCTS

2.1 EQUIPMENT (SHELL AND TUBE TYPE HEAT EXCHANGER)

A. Manufacturer
   1. Hoffman Process Inc.
   2. Other with IT approval.

B. Tubes: Single-pass tube type with 3/4 inch OD minimum seamless carbon steel tubes suitable for 125psi working pressure.

C. Shell: Carbon steel with threaded or flanged piping connections and necessary tappings, steel saddle and attaching U-bolts, prime coated.

D. Heads: Carbon steel with steel tube sheets, threaded or flanged for piping connections.

E. Water Chamber and Tube Bundle: Removable for inspection and cleaning.

F. Design: Cooling fluid in shell and heated process fluid in tubes.

G. Performance:
1. Operating Condition 1 - process rate of 30 tons/hr
Heated Media
a) Heat Transfer Rate: (24 million BTU/hr)
b) Pressure drop: (TBD psi)
c) Entering temperature: (170 degrees F)
d) Leaving temperature: (85 degrees F)
e) Fouling factor: (TBD)
f) Working pressure: (TBD psi)
g) Flowrate: 500 gpm estimated

Cooling Media
a) Entering temperature: (85 degrees F)
b) Fouling factor: (TBD)
c) Working pressure: (TBD psi)
d) Flowrate: 5500 gpm estimated

H. All equipment shall be provided with lifting and hold down lugs.

I. Static pressure taps shall be provided to check the pressure drop across the system and calibrate the control system pressure transducers.

J. Equipment/structural design shall provide for loads as specified below:
1. Platforms and walkways, live load: 75 psf.
2. Wind load: 80 mph basic wind speed
Exposure "C"
Importance Factor 1.15
3. Seismic load: Use provisions of the Uniform Building Code, using Seismic Zone 1 and Importance Factor 1.25. W (total seismic load) shall include all normal operating contents, piping and attachments.
4. Shop drawings shall state the vertical loads and lateral forces used (wind and seismic) in the design.

2.2 FABRICATION

A. Prior to shipment, the equipment shall be cleaned of all dirt, dust, grease, grime, weld spatter, and other foreign materials. All burrs and sharp edges shall be ground smooth. Exterior surfaces of steel components shall be primed and painted in accordance with the manufacturer's standard finish. Open-end connections shall be sealed to prevent the entrance of foreign material.

2.3 LABELING

A. Each item shall have a manufacturer's standard nameplate permanently attached at a location which is easily readable. The nameplate shall contain the following information, as applicable:
1. Item description.

2. Item number/tag number.
3. Manufacturer's name.
4. Purchase order number.
5. Date of manufacture.
6. Capacity.

PART 3 EXECUTION

3.1 ERECTION/INSTALLATION

A. Install equipment in accordance with manufacturer's instructions and design drawings.

3.2 FIELD QUALITY ASSURANCE

A. Tests: Perform leak and hydrostatic testing in accordance with ASME BPVC to ensure that there are no leaks in the heat exchanger system. Perform pressure drop and heat transfer testing across the heat exchanger system to insure conformance with this specification. If the results are unsatisfactory, the Subcontractor shall adjust or replace the equipment to meet the specification requirements and retest the equipment.

-End of Section-

SECTION 15752

CONTACT SCRUBBER SECONDARY HEAT EXCHANGER

PART 1 GENERAL

1.1 SECTION INCLUDES

A. Shell and tube heat exchanger.

B. Accessories and trim.

1.2 RELATED SECTIONS

A. Section 09900 - Painting General
B. Section 13200 - General Tanks and Vessels
C. Section 13201 - ASME Code Tanks and Vessels
D. Division 16 - .

1.3 REFERENCES, CODES, AND STANDARDS

A. American Society of Mechanical Engineers (ASME) :
1. ASME Boiler and Pressure Vessel Code (BPVC), Section IX.

B. American Society for Testing and Materials (ASTM):
1. ASTM A36/A36M Standard Specification for Structural Steel.

C. American Welding Society (AWS):

D. Uniform Building Code (UBC).

1.4 SYSTEM DESCRIPTION

A. Design Requirements
The heat exchanger will be required to lower the temperature of the contact scrubber recirculation water from temperature range 95 - 85 degrees F to 75 degrees F.

1.5 SUBMITTALS

A. Shop Drawings: Indicate dimensions; sizes; weights and point loadings; material thickness, and locations, sizes.

B. Product Data: Provide data indicating rated capacities and accessories.

C. Design Data: Indicate in sufficient detail to verify that heat exchanger meet or exceed specified requirements.

D. Manufacturer's Installation Instructions: Indicate assembly and installation instructions sufficient to facilitate efficient assembly.

E. Design Calculations: For material thickness and supports for wind, seismic and snow loadings, for determination of diameters and entry dimensions, for evaluation of wear and erosion in cylinders, for determination of effective number of turns prior to discharge.

F. Operation and Maintenance Data: Include operation and maintenance instructions and spare parts list (10 copies).

G. Certificate: Certify that the equipment meets or exceeds the requirements of this specification.

H. Spare parts list for 1-year and 5-year operation.

1.6 DELIVERY, STORAGE AND HANDLING

A. Store in a clean, dry place and protect from weather prior to shipment. Provide protection from weather and damage during transient.

B. Loose items, is any, shall be tagged and delivered in a standard commercial package.

1.7 WARRANTY

A. Warranty: The heat exchanger shall be warranted by the manufacturer including parts and labor.

PART 2 PRODUCTS

2.1 EQUIPMENT (SHELL AND TUBE TYPE HEAT EXCHANGER)

A. Manufacturer
1. Hoffman Process Inc.
2. Other with IT approval.

B. Tubes: Single-pass tube type with 3/4 inch OD minimum seamless carbon steel tubes suitable for 125 psi working pressure.

C. Shell: Carbon steel with threaded or flanged piping connections and necessary tappings, steel saddle and attaching U-bolts, prime coated.

D. Heads: Carbon steel with steel tube sheets, threaded or flanged for piping connections.

E. Water Chamber and Tube Bundle: Removable for inspection and cleaning.

F. Design: Cooling fluid in shell and heated process fluid in tubes.

G. Performance:
1. Heat Transfer Rate: (2.5 mmBTU/hr)

2. Heated Media
   a) Flow Rate: (500 gpm)
   b) Pressure drop: (TBD psi)
   c) Entering temperature: (85 degrees F)
   d) Leaving temperature: (75 degrees F)
   e) Fouling factor: (TBD)
   f) Working pressure: (TBD psi)

   Cooling Media
   a) Flow Rate: (350 gpm)
   b) Pressure drop: (TBD psi)
   c) Entering temperature: (44 degrees F)
   d) Leaving temperature: (59 degrees F)
   e) Fouling factor: (TBD)
   f) Working pressure: (TBD psi)

H. All equipment shall be provided with lifting and hold down lugs.

I. Static pressure taps shall be provided to check the pressure drop across the system and calibrate the control system pressure transducers.

J. Equipment/structural design shall provide for loads as specified below:
1. Platforms and walkways, live load: 75 psf.
2. Wind load: 80 mph basic wind speed
   Exposure "C"
   Importance factor 1.15
3. Seismic load: Use provisions of the Uniform Building Code, using Seismic zone 1 and Importance factor 1.25 W (total seismic load) shall include all normal operating contents, piping and attachments.
4. Shop drawings shall state the vertical loads and lateral forces used (wind and seismic) in the design.

2.2 FABRICATION

A. Prior to shipment, the equipment shall be cleaned of all dirt, dust, grease, grime, weld spatter, and other foreign materials. All burrs and sharp edges

shall be ground smooth. Exterior surfaces of steel components shall be primed and painted in accordance with the manufacturer's standard finish. Open-end connections shall be sealed to prevent the entrance of foreign material.

2.3 LABELING

A. Each item shall have a manufacturer's standard nameplate permanently attached at a location which is easily readable. The nameplate shall contain the following information, as applicable:
   1. Item description.
   2. Item number/Tag number.
   3. Manufacturer's name.
   4. Purchase order number.
   5. Date of manufacture.
   6. Capacity.

PART 3 EXECUTION

3.1 ERECTION/INSTALLATION

A. Install equipment in accordance with manufacturer's instructions and design drawings.

3.2 FIELD QUALITY ASSURANCE

A. Tests: Perform leak testing to ensure that there are no air leaks in the cyclone system. Perform pressure drop and solids removal testing across the cyclone system to insure conformance with this specification. If the results are unsatisfactory, the Subcontractor shall adjust or replace the equipment to meet the specification requirements and retest the equipment.

-End of Section-

SECTION 15860

INDUCED DRAFT FAN

PART 1 GENERAL

1.1 SECTION INCLUDES

A. ID Fan

1.2 RELATED SECTIONS

A. Section 09900 - Painting General
B. Section 13310 - Noise Level Specification
C. Section 15050 - Piping and Accessories
D. Section 15080 - Piping Specialties
E. Section 15170 - Motors.
F. Division 16 - Electrical

1.3 REFERENCES

A. ABMA STD 9 - Load Ratings and Fatigue Life for Ball Bearings.

B. ABMA STD 11 - Load Ratings and Fatigue Life for Roller Bearings.

C. AMCA 99 - Standards Handbook.

D. AMCA 210 - Laboratory Methods of Testing Fans for Rating.

E. AMCA 261 - Directory of Products Licensed to Use the AMCA Certified Ratings Seal.

F. AMCA 300 - Reverberant Room Method for Sound Testing of Fans.

G. SMACNA - Sheet Metal and Air Conditioning Contractors National Association.

1.4 SYSTEM DESCRIPTION

A. Design Requirements

The ID Fan will be required to provide sufficient motive force to maintain a vacuum (negative pressure)in the dryer, as well as to provide the necessary pressure differential across the gas cleaning system.

1.5 SUBMITTALS FOR REVIEW

A. Product Data: Provide data on centrifugal fans and accessories including fan curves with specified operating point(s) clearly plotted, power, RPM, sound power levels for both fan inlet and outlet at rated capacity, and electrical characteristics and connection requirements.

B. Shop Drawings: Indicate assembly of centrifugal fans and accessories including fan curves with specified operating point(s) clearly plotted, sound power levels for both fan inlet and outlet at rated capacity, and electrical characteristics and connection requirements.

C. Manufacturer's Instructions: Indicate installation instructions.

D. Maintenance Data: Include instructions for lubrication, motor and drive replacement, spare parts list, and wiring diagrams.

E. Certificate: Certify that the equipment meets or exceeds the requirements of this specification.

F. Spare parts list for one year and five year operation.

1.6 WARRANTY

A. Warranty: The ID Fan and its accessory components shall be warranted by the manufacturer including parts and labor.

1.7 DELIVERY, STORAGE, AND PROTECTION

A. Protect motors, shafts, and bearings from weather and construction dust.

PART 2 PRODUCTS

2.1 PERFORMANCE

A. Induced Air Fan

1 Performance Ratings: Conform to AMCA 210.
2 Sound Ratings: Tested to AMCA 300 and in accordance with Section 13310.
3 Fabrication: Conform to AMCA 99.
4. Altitude: 580 ft. Above sea level.
5. Service: Process Exhaust Gas.
6. Temperature: Maximum 200 degrees F.
7. Static and Dynamic Balance: Eliminate vibration or noise transmission to occupied areas.
8. Flow: 1,925 - 4,690 acfm.

9. Static Pressure: 56 in. w.g.
10. Motor:
    1. 480 volts, three phase, 60 Hz.
    2. Refer to Division 16 for electrical requirements.
    3. Type: TEFC. Refer to Section 15170.

2.2 WHEEL AND INLET

A. Backward Inclined: Steel construction with smooth curved inlet flange, heavy back plate, backwardly curved blades welded or riveted to flange and back plate; cast iron (or cast steel) hub riveted to back plate and keyed to shaft with set screws.

B. Forward Curved: Galvanized steel construction with inlet flange, back plate, shallow blades with inlet and tip curved forward in direction of airflow, mechanically secured to flange and back plate; steel hub swaged to back plate and keyed to shaft with set screws.

C. Radial: Steel construction with inlet flange, heavy reinforced back plate, plate blades with reinforcing gussets and wearing strips welded or riveted to back plate and flange; cast iron (or cast steel) hub riveted to back plate and keyed to shaft with set screws.

2.3 HOUSING

A. Heavy gage steel, spot welded for AMCA 99 Class I and II fans, and continuously welded for Class III, adequately braced, designed to minimize turbulence with spun inlet bell and shaped cut-off.

B. Factory finish before assembly to manufacturer's standard.

C. Provide bolted construction with horizontal flanged split housing, where indicated.

D. Fabricate plug fans without volute housing, in lined steel cabinet.

2.4 BEARINGS AND DRIVES

A. Bearings: Heavy duty pillow block type, self-aligning, grease-lubricated ball bearings, with ABMA 9 (L-10 life at 50,000 hours or L-50 life at 100,000 hours) or roller bearings, with ABMA 11, (L-10 life at 120,000 hours or L-50 life at 400,000 hours).

B. Shafts: Hot rolled steel, ground and polished, with keyway, protectively coated with lubricating oil, and shaft guard.

C. V-Belt Drive: Cast iron or steel sheaves, dynamically balanced, keyed. Variable and adjustable pitch sheaves for motors 15 hp and under, selected so required rpm is obtained with sheaves set at mid-position. Fixed sheave for 20 hp and over, matched belts, and drive rated as recommended by manufacturer or minimum 1.5 times nameplate rating of the motor.

D. Belt Guard: Fabricate to SMACNA Standard; 0.106 inch thick, 3/4 inch diamond mesh wire screen welded to steel angle frame or equivalent, prime coated. Secure to fan or fan supports without short circuiting vibration isolation, with provision for adjustment of belt tension, lubrication, and use of tachometer with guard in place.

2.5 ACCESSORIES

A. Fixed Inlet Vanes: Steel construction with fixed cantilevered inlet guide vanes welded to inlet bell.

B. Adjustable Inlet Vanes: Steel construction with blades supported at both ends or cantilevered with two permanently lubricated bearings, variable mechanism out of air stream terminating in single control lever with control shaft for double width fans and locking quadrant.

C. Discharge Dampers: Parallel or opposed blade heavy duty steel damper assembly with blades constructed of two plates formed around and welded to shaft, channel frame, sealed ball bearings, with blades linked out of air stream to single control lever.

D. Inlet/Outlet Screens: Galvanized steel welded grid.

E. Access Doors: Shaped to conform to scroll, with quick opening latches and gaskets.

F. Scroll Drain: 1/2 inch steel pipe coupling welded to low point of fan scroll.

PART 3 EXECUTION

3.1 INSTALLATION

A. Install fans with resilient mountings and flexible electrical leads.

B. Install flexible connections between fan inlet and discharge ductwork. Ensure metal bands of connectors are parallel with minimum one inch flex between ductwork and fan while running.

C. Provide fixed sheaves required for final air balance.

D. Provide safety screen where inlet or outlet is exposed.

E. Pipe scroll drains to nearest floor drain.

F. Provide backdraft dampers on discharge of exhaust fans and as indicated.

G. Do not operate fans in normal operation until ductwork is clean, filters are in place, bearings are lubricated, and fan has been test run under observation.

3.2 SCHEDULES

A. Drawing Code (F-1)
1. Manufacturer
2. Model
3. Fan Type
4. Wheel Type
5. Class
6. Arrangement
7. Size
8. Air Flow Capacity
9. Static Pressure
10. Drive
11. Motor hp
    a. Electrical Characteristics
12. Discharge Sound Power
    a. 1st Octave
    b. 2nd Octave
    c. 3rd Octave
    d. 4th Octave
    e. 5th Octave
    f. 6th Octave
    g. 7th Octave
    h. 8th Octave
13. Inlet Sound Power
    a. 1st Octave
    b. 2nd Octave
    c. 3rd Octave
    d. 4th Octave
    e. 5th Octave
    f. 6th Octave
    g. 7th Octave
    h. 8th Octave
14. Accessories

END OF SECTION

SECTION 15863

HEPA SYSTEM

PART 1 GENERAL

1.1 SECTION INCLUDES

A. HEPA Filter System

1.2 RELATED SECTIONS

A. Section 09900 - Painting General
B. Section 13200 - General Tanks and Vessels
C. Section 15250 - Insulation.

1.3 REFERENCES, CODES, AND STANDARDS

A. American Society for Testing and Materials (ASTM):
   1. ASTM A36/A36M Standard Specification for Structural Steel.

B. American Welding Society (AWS):

C. American Society of Civil Engineers (ASCE)

D. Uniform Building Code (UBC)

1.4 SYSTEM DESCRIPTION

A. The HEPA filter system will be required to serve as the final particulate filter from the exhaust gas of a rotary dryer. The off gas from the dryer will be saturated, condensed, scrubbed, filtered through a wet electrostatic filter and reheated prior to entering the final particulate filter. The final particulate filter system shall consist of an insulated cabinet for housing prefilter, intermediate filter, and HEPA filter sections.

1.5 SUBMITTALS

A. Shop Drawings: Indicate dimensions; sizes; weights and point loadings; material thickness, and locations, sizes.

B. Product Data: Provide data indicating rated capacities and accessories.

C. Manufacturer's Installation Instructions: Indicate assembly and installation instructions sufficient to facilitate efficient assembly.

D. Design Calculations: For material thickness and supports for positive pressure, wind, and seismic loadings, for determination of plenum dimensions, for determination of face velocity and frontal area, and for determination of filter replacement frequency.

E. Operation and Maintenance Data: Include operation and maintenance instructions and spare parts list. (10 copies)

F. Certificate: Certify that the equipment meets or exceeds the requirements of this specification.

G. Spare parts list for 1 year and 5 year operation.

1.6 DELIVERY, STORAGE AND HANDLING

A. Store in a clean, dry place and protect from weather prior to shipment. Provide protection from weather and damage during transient.

B. Loose items, if any, shall be tagged and delivered in a standard commercial package.

1.7 WARRANTY

A. Warranty: The HEPA filtration system shall be warranted by the manufacturer including parts and labor.

PART 2 PRODUCTS

2.1 EQUIPMENT

A. HEPA filter system consisting of an insulated cabinet for housing prefilter, intermediate filter, and HEPA filter sections. The system shall be designed for outdoor service. The cabinet shall provide side access for filter replacement. The cabinet, doors, and seals shall be designed to seal against 12" wc positive pressure. Static pressure taps, and magnehelics gages shall be provided for reading differential pressure across each filter bank. Filter system shall be designed to allow on-line maintenance of redundant filter bank.

B. Insulation: 2" thick mineral wool, 4 lb density

C. Collection Efficiency: The overall collection efficiency of the system shall exceed 99.97 percent at the mass diameter of 0.3 microns and particle density of 120 lbs/ft^3.

D. Materials: Manufacturer's selection

E. Welding: All weld joints and seams shall be continuously welded. All weld joints shall be visually inspected for cracks, underfill, incomplete fusion, overlaps, surface porosity, gas pockets, crevices, crater pits and depressions. All joints and seams shall be ground smooth, and all burrs and sharp edges removed. All welding procedures, welders and welder operators shall be qualified in accordance with ASME Boiler and Pressure Vessel Code, Section IX.

F. Performance Requirements -

1. System shall be suitable for continuous operation
2. Operating Condition
   a) Volumetric flow rate: 4,000 ACFM
   b) Temperature: 110 °F
   c) Relative humidity 48%
   d) Pressure: +6 in. w.c.
   e) Solids loading
      Minimum 0.002 lbs/hr
      Maximum 0.017 lbs/hr
3. Design Condition:
   a) Volumetric flow rate: 4,000 ACFM.
      System shall be designed for 1,000 CFM HEPA filters, but 2,000 CFM HEPA will be used
   b) Temperature: 200 °F
   c) Pressure: +10 in. w.c.
4. Design Pressure: +12 in. w.c.
5. Particle size distribution:

Particle Size Distribution to HEPA	
Size Range (microns)	Percent in Range
<100	0.004
50	0.037
20	0.507
10	0.734
6	12.233
3	22.860
<1	63.626

G. All equipment shall be provided with lifting and hold down lugs.

H. Static pressure taps shall be provided to check pressure drop across the system.

I. Equipment/structural design shall provide for loads as specified below:

1. Wind load: 80 mph basic wind speed
   Exposure "C"
   Importance Factor 1.15
2. Seismic load: Seismic Zone 1 and Importance Factor 1.25. W (total seismic load) shall include all normal operating contents, piping and attachments.
3. Shop drawings shall state the vertical loads and lateral forces used (wind and seismic) in the design.

2.2 FABRICATION

A. Prior to shipment, the equipment shall be cleaned of all dirt, dust, grease, grime, weld spatter, and other foreign materials. All burrs and sharp edges shall be ground smooth. Exterior surfaces of steel components shall be primed and painted in accordance with Section 09900 - Painting or the manufacturer's standard finish with IT approval. Areas to be insulated shall have support rings as per Section 15250 - Insulation.

2.3 LABELING

A. Each item shall have a manufacturer's standard nameplate permanently attached at a location which is easily readable. The nameplate shall contain the following information, as applicable:
1. Item description.
2. Item number/Tag number.
3. Manufacturer's name.
4. Purchase order number.
5. Date of manufacture.
6. Capacity.

PART 3 EXECUTION

3.1 ERECTION/INSTALLATION

A. Install equipment in accordance with manufacturer's instructions and design drawings.

3.2 FIELD QUALITY ASSURANCE

A. Tests: Perform leak testing to ensure that there are no air leaks in the system. If the results are unsatisfactory, the Subcontractor shall adjust or

replace the equipment to meet the specification requirements and retest the equipment.

-End of Section-

SECTION 15883

CYCLONE SYSTEM

PART 1 GENERAL

1.1 SECTION INCLUDES

A. Cyclonic Separation System

1.2 RELATED SECTIONS

A. Section 09900 - Painting General
B. Section 13200 - General Tanks and Vessels
C. Section 15250 - Insulation

1.3 REFERENCES, CODES, AND STANDARDS

A. American Society of Mechanical Engineers (ASME):
   1. ASME Boiler and Pressure Vessel Code (BPVC), Section IX.

B. American Society for Testing and Materials (ASTM):
   1. ASTM A36/A36M Standard Specification for Structural Steel.

C. American Welding Society (AWS):

D. American Society of Civil Engineers (ASCE)

E. Uniform Building Code (UBC)

1.4 SYSTEM DESCRIPTION

A. Design Requirements

The cyclonic separation system will be required to remove particulate matter from the exhaust gas of the rotary dryer.

1.5 SUBMITTALS

A. Shop Drawings: Indicate dimensions; sizes; weights and point loadings; material thickness, and locations, sizes.

B. Product Data: Provide data indicating rated capacities and accessories.

C. Manufacturer's Installation Instructions: Indicate assembly and installation instructions sufficient to facilitate efficient assembly.

D. Design Calculations: For material thickness and supports for wind, seismic and snow loadings, for determination of diameters and entry dimensions, for evaluation of wear and erosion in cylinders, for determination of effective number of turns prior to discharge.

E. Operation and Maintenance Data: Include operation and maintenance instructions and spare parts list. (10 copies)

F. Certificate: Certify that the equipment meets or exceeds the requirements of this specification.

G. Spare parts list for 1-year and 5-year operation.

1.6 DELIVERY, STORAGE AND HANDLING

A. Store in a clean, dry place and protect from weather prior to shipment. Provide protection from weather and damage during transient.

B. Loose items, if any, shall be tagged and delivered in a standard commercial package.

1.7 WARRANTY

A. Warranty: The cyclonic separator system shall be warranted by the manufacturer including parts and labor.

PART 2 PRODUCTS

2.1 EQUIPMENT

A. Manufacturers
   1. Entech Environmental Systems, Inc.
   2. Flex-Kleen Corp.
   3. Beckhart & Hiester, Inc.

B. A Multiple Cyclone Separator System consisting of a single bank of cyclones. The diameter of the cyclone will be sized to accommodate a set of operating conditions and flow rates.

The multiple cyclone system will incorporate a system by which a portion of the cyclone bank can be blinded off to accommodate the turn down of the process rate. There are four design process rates for the system. Those rates are defined in Section G.

C. Dust Transport: The multi-cyclone will be equipped with an airtight rotary valve which will be designed to mate with a screw conveyor to be supplied by others.

D. Collection Efficiency: The overall collection efficiency of the system shall exceed 90 percent at the mass mean diameter of 12 microns and particle density of 120 lbs/ft^3.

E. Materials: Manufacturer's selection of a hardened steel for abrasive dust service. Flanged connections shall be 150 lb. class. Structural steel supports shall be in accordance with ASTM A36/A36M.

F. Welding: Shall be in accordance with ASME BPVC Section IX and AWS.

G. Performance Requirements -
1. System shall be suitable for continuous operation
2. Inlet Conditions:
   a. Operating Condition 1 - process rate of 5 tons/hr.
      1) Mass flow rate: 11,130 lbs/hr
      2) Temperature: 750 °F
      3) Solids 150 lbs/hr
   b. Operating Condition 2 - process rate of 10 tons/hr.
      1) Mass flow rate: 14,130 lbs/hr
      2) Temperature: 675°F
      3) Solids 450 lbs/hr
   c. Operating Condition 3 - process rate of 15 tons/hr.
      1) Mass flow rate: 17,130 lbs/hr
      2) Temperature: 652°F
      3) Solids 675 lbs/hr
   d. Operating Condition 4 - process rate of 30 tons/hr.
      1) Mass flow rate: 26,130 lbs/hr
      2) Temperature: 478°F
      3) Solids 2,400 lbs/hr
3. Particulate Removal Requirement
   a. Solids removal: 2,000 lbs/hr
   b. Pressure drop across system: not to exceed 6 in. w.c.
4. Design Pressure: -60 in. w.c.
5. Particle size distribution:

Particle Size Distribution of Rotary Dryer Carryover		
Size Range (microns)	Cumulative Percent Less Than	Percent in Range
<100	100	17
50	83	20
20	63	16
10	47	14
6	33	16
3	17	11
<1	6	6

H. All equipment shall be provided with lifting and hold down lugs.

I. Static pressure taps shall be provided to check the pressure drop across the system and calibrate the control system pressure transducers.

J. Equipment/structural design shall provide for loads as specified below:
   1. Platforms and walkways, live load: 75 psf.
   2. Wind load: 80 mph basic wind speed
      Exposure "C"
      Importance Factor 1.15
   3. Seismic load: Seismic Zone 1 and Importance Factor 1.25. W (total seismic load) shall include all normal operating contents, piping and attachments.
   4. Shop drawings shall state the vertical loads and lateral forces used (wind and seismic) in the design.

2.2 FABRICATION

A. Prior to shipment, the equipment shall be cleaned of all dirt, dust, grease, grime, weld spatter, and other foreign materials. All burrs and sharp edges shall be ground smooth. Exterior surfaces of steel components shall be primed and painted in accordance with Section 09900 - Painting General or the manufacturer's standard finish with IT approval. Open-end connections shall be sealed to prevent the entrance of foreign material. Areas to be insulated shall have support rings per Section 15250 - Insulation.

2.3 LABELING.

A. Each item shall have a manufacturer's standard nameplate permanently attached at a location which is easily readable. The nameplate shall contain the following information, as applicable:
   1. Item description.
   2. Item number/Tag number.
   3. Manufacturer's name.
   4. Purchase order number.
   5. Date of manufacture.
   6. Capacity.

Part 3 EXECUTION

3.1 ERECTION/INSTALLATION

A. Install equipment in accordance with manufacturer's instructions and design drawings.

3.2 FIELD QUALITY ASSURANCE

A. Tests: Perform leak testing to ensure that there are no air leaks in the cyclone system. Perform pressure drop and solids removal testing across the cyclone system to insure conformance with this specification. If the results are unsatisfactory, the Subcontractor shall adjust or replace the equipment to meet the specification requirements and retest the equipment.

-End of Section-

SECTION 15884

CARBON BED ADSORBER

PART 1 GENERAL

1.1 SECTION INCLUDES

A. Carbon Adsorber to remove radon and trace organics from the exhaust gas stream of the rotary dryer.

1.2 RELATED SECTIONS

A. Section 09900 - Painting General
B. Section 13200 - General Tanks and Vessels
C. Section 15050 - Piping and Accessories
D. Section 16900 - Instrumentation and Controls
E. Division 16 - Electrical.

1.3 REFERENCES, CODES, AND STANDARDS

A. American Society for Testing and Materials (ASTM):
   1. ASTM A36/A36M-93 Standard Specification for Structural Steel.
B. American Welding Society (AWS):

C. Uniform Building Code (UBC)

1.4 SYSTEM DESCRIPTION

A. Design Requirements

The Carbon Bed shall be designed to remove radon and trace levels of organics from the exhaust gas of the rotary dryer, with sufficient efficiency so as to comply with all applicable emission regulations.

1.5 SUBMITTALS

A. Shop Drawings: Indicate dimensions; sizes; weights and point loadings; material thickness, and locations, sizes.

B. Product Data: Provide data indicating rated capacities and accessories.

C. Manufacturer's Installation Instructions: Indicate assembly and installation instructions sufficient to facilitate efficient assembly.

D. Design Calculations: For material thickness and supports for wind, seismic and snow loadings. Calculations shall be provided for determination of diameter, height, radon capacity and anticipated service life and overall collection efficiency.

E. Operation and Maintenance Data: Include operation and maintenance instructions and spare parts list.

F. Certificate: Certify that the equipment meets or exceeds the requirements of this specification.

G. Spare parts list for one year and five year operation.

1.6 DELIVERY, STORAGE AND HANDLING

A. Store in a clean, dry place and protect from weather prior to shipment. Provide protection from weather and damage during transient.

B. Loose items, if any, shall be tagged and delivered in a standard commercial package.

1.7 WARRANTY

A. Warranty: The Carbon Bed and its accessory components shall be warranted by the manufacturer for parts, equipment performance and labor.

PART 2 PRODUCTS

2.1 EQUIPMENT

A. Manufacturers
1. FLS miljo Inc. (AirPol)
2. ABB Inc.
3. Beltran Associates, Inc.
4. Approved Equal.

B. A waste drying process will create off gases containing water vapor, particulate, acid gases, and other pollutants which will be removed in various control devices upstream of an activated carbon adsorber. The carbon bed will be the final pollution control device planned for the gas cleaning system and will be situated after a HEPA filtration system. The gas stream will be free of particulate, semi-volatile organic compounds, and other pollutants collected elsewhere. Radon will be formed in the process by the radioactive decay of radium. Carbon adsorption is specified as the Best Available Technology for radon collection.

The carbon bed shall be constructed of painted carbon steel or other material suitable for this application. The carbon bed shall be supplied with bolted access doors.

The carbon bed shall be designed to operate continuously. The carbon bed shall be designed to operate with a nominal pressure drop of no more than 6" w.c. and not to exceed 10" w.c. during transient excursions. The design is to be the Seller's standard design to the maximum extent practicable.

The carbon bed shall be configured to allow for ease of carbon replacement.

The supplier shall include a NEMA 4 control panel completely assembled, tested and clearly labeled. The control panel shall be designed to incorporate the entire 120 V control logic / sequence, however, should the scope of supply include up stream gas cleaning equipment, the supplier may include other logic/sequence operations in one (1) panel.

The 120 V control panel shall include, at a minimum, the following:

1. Visual and audible alarm indication due to failure of critical items, recycle pump, high temperature, low pH, high pH, etc...

2. Audible alarm silence without the loss of the visual alarm indication.

3. Alarm reset.

C. Liquid Discharge: The system shall incorporate a drain designed to resist clogging and allow for manual flushing as required to keep the drain path free of buildup.

D. Collection Efficiency: The overall collection efficiency of the system for radon of at least 50%. The overall collection efficiency for organics shall exceed 97%.

E. Materials: manufacturer's selection of materials for the frame and internals shall be resistant to chloride salts and organic solvents. Flanged connections shall be 150 lb class. Structural steel supports shall be in accordance with ASTM A36/A36M.

F. Welding: Shall be in accordance with ASME BPVC Section IX and AWS.

G. Performance Requirements -
   1. System shall be suitable for continuous operation
   2. Inlet Conditions:
      a. 1) Mass flow rate: 15,200 lbs/hr
         2) Volumetric Flowrate: 3,800 ACFM @ 110°F

3)	Temperature:	80°F to 140°F
4)	Solids:	0.0001 lbs/hr
5)	Radon Loading:	0.5 nCi/L
6)	Volatile organic Loading :	100 mg/ft^3
7)	Humidity:	43% relative humidity @ 110°F

3. Static Design Pressure:
   a. Operating: 6" w.c. to 10" w.c.
   b. Maximum: 60" w.c.

H. All equipment shall be provided with lifting and hold down lugs.

I. Static pressure taps shall be provided to check the pressure drop across the system.

J. Equipment/structural design shall provide for loads as specified below:
   1. Roof, live load: 20 psf
   2. Platforms and walkways, live load: 75 psf.
   3. Wind load: 80 mph basic wind speed
      Exposure "C"
      Importance Factor 1.15
   4. Seismic load: Use provisions of the Uniform Building Code, using Seismic Zone 1 and Importance Factor 1.25. W (total seismic load) shall include all normal operating contents, piping and attachments.
   5. Shop drawings shall state the vertical loads and lateral forces used (wind and seismic) in the design.

2.2 FABRICATION

A. Prior to shipment, the equipment shall be cleaned of all dirt, dust, grease, grime, weld spatter, and other foreign materials. All burrs and sharp edges shall be ground smooth. Exterior surfaces of steel components shall be primed and painted in accordance with the manufacturer's standard finish. Open-end connections shall be sealed to prevent the entrance of foreign material.

2.3 LABELING

A. Each item shall have a manufacturer's standard nameplate permanently attached at a location which is easily readable. The nameplate shall contain the following information, as applicable:
   1. Item description.
   2. Item number/tag number.
   3. Manufacturer's name.
   4. Purchase order number.
   5. Date of manufacture.

6. Capacity.

PART 3 EXECUTION

3.1 ERECTION/INSTALLATION

A. Install equipment in accordance with manufacturer's instructions and design drawings.

3.2 FIELD QUALITY ASSURANCE

A. Tests: Perform leak testing to quantify the amount of in leakage during normal operation. Perform pressure drop testing across the system to insure conformance with this specification. If the results are unsatisfactory, the Subcontractor shall adjust or replace the equipment to meet the specification requirements and retest the equipment.

-End of Section-

SECTION 15885

CYCLONE TRANSFER SCREW

PART 1 GENERAL

1.1 SECTION INCLUDES

A. Cyclone Transfer Screw

1.2 RELATED SECTIONS

A. Section 09900 - Painting General
B. Section 13310 - Noise Level Specification
C. Section 15270 - Motors
D. Section 15250 - Insulation
E. Division 16 - Electrical

1.3 REFERENCES, CODES, AND STANDARDS

A. American Society of Mechanical Engineers (ASME) :
   1. ASME Boiler and Pressure Vessel Code (BPVC), Section IX.

B. American Society for Testing and Materials (ASTM):
   1. ASTM A36/A36M Standard Specification for Structural Steel.

C. American Welding Society (AWS):

D. American Society of Civil Engineers (ASCE)

E. Uniform Building Code (UBC)

1.4 SYSTEM DESCRIPTION

A. The cyclone transfer screw conveyor will convey hot, dry, fine particulate collected from the multi cyclone separator and convey it to a single discharge point. The cyclone is the first stage particulate collection of an off gas cleaning system on an indirect fired rotary dryer. The overall length of the conveyor is 30 feet. A rotary air lock will be located at the discharge of the multi cyclone. The screw conveyor will discharge back into the feed hopper of the rotary dryer to be blended with wet feed material.

1.5 SUBMITTALS

A. Shop Drawings: Indicate dimensions; sizes; weights and point loadings; material thickness, and locations, sizes.

B. Product Data: Provide data indicating rated capacities and accessories.

C. Manufacturer's Installation Instructions: Indicate assembly and installation instructions sufficient to facilitate efficient assembly.

D. Design Calculations: For material thickness and supports for wind and seismic a loadings, for determination of screw diameter, loading and horsepower.

E. Operation and Maintenance Data: Include operation and maintenance instructions and spare parts list. (10 copies)

F. Certificate: Certify that the equipment meets or exceeds the requirements of this specification.

G. Spare parts list for 1 year and 5 year operation.

1.6 DELIVERY, STORAGE AND HANDLING

A. Store in a clean, dry place and protect from weather prior to shipment. Provide protection from weather and damage during transient.

B. Loose items, if any, shall be tagged and delivered in a standard commercial package.

1.7 WARRANTY

A. Warranty: The Cyclone Transfer Screw shall be warranted by the manufacturer including parts and labor.

PART 2 PRODUCTS

2.1 EQUIPMENT

A. Cyclone Transfer Screw Conveyor - The conveyor will convey hot, dry, fine particulate collected from the multi cyclone separator and discharge it to a single discharge point. The normal operating pressure within the screw

conveyor is -7" wg. The conveyor shall be insulated to prevent condensation in the screw conveyor (refer to section 15250).

B. Air Lock - Rotary valve located on the screw conveyor discharge. Under normal operating conditions the valve will seal against a 7" wg negative pressure at the valve inlet and will discharge to atmospheric pressure.

C. Materials: Manufacturer's selection of a hardened steel for abrasive dust service. Flanged connections shall be 150 lb class. Structural steel supports shall be in accordance with ASTM A36/A36M.

D. Welding: Shall be in accordance with ASME BPVC Section IX and AWS.

E. Performance Requirements -
1. System shall be suitable for continuous operation
2. Operating Condition
   1) Mass flow rate: 2,400 lbs/hr
   2) Temperature: 750 °F
3. Design Pressure: -60 in. wg. Normal operating pressure will be -7 in. wg
4. Particle size distribution:

Particle Size Distribution of Rotary Dryer Carryover		
Size Range (microns)	Cumulative Percent Less Than	Percent in Range
<100	100	17
50	83	20
20	63	16
10	47	14
6	33	16
3	17	11
<1	6	6

F. All equipment shall be provided with lifting and hold down lugs.

G. Equipment/structural design shall provide for loads as specified below:
1. Platforms and walkways, live load: 75 psf.

2. Wind load: 80 mph basic wind speed
Exposure "C"
Importance Factor 1.15.

3. Seismic load: Use provisions of the Uniform Building Code, using Seismic Zone 1 and Importance Factor 1.25. W (total seismic load) shall include all normal operating contents, piping and attachments.

4. Shop drawings shall state the vertical loads and lateral forces used (wind and seismic) in the design.

2.2 FABRICATION

A. Prior to shipment, the equipment shall be cleaned of all dirt, dust, grease, grime, weld spatter, and other foreign materials. All burrs and sharp edges shall be ground smooth. Exterior surfaces of steel components shall be primed and painted in accordance with Section 09900 - Painting or the manufacturer's standard finish with IT approval. Open-end connections shall be sealed to prevent the entrance of foreign material. Areas to be insulated shall have support rings as per Section 15250 - Insulation.

2.3 LABELING

A. Each item shall have a manufacturer's standard nameplate permanently attached at a location which is easily readable. The nameplate shall contain the following information, as applicable:

1. Item description.
2. Item number/Tag number.
3. Manufacturer's name.
4. Purchase order number.
5. Date of manufacture.
6. Capacity.

PART 3 EXECUTION

3.1 ERECTION/INSTALLATION

A. Install equipment in accordance with manufacturer's instructions and design drawings.

3.2 FIELD QUALITY ASSURANCE

A. Tests: Perform leak testing at temperature to ensure that there are no air leaks in the conveyor system. If the results are unsatisfactory, the Subcontractor shall adjust or replace the equipment to meet the specification requirements and retest the equipment.

-End of Section-

SECTION 15930

SPRAY QUENCH

PART 1 GENERAL

1.1 SECTION INCLUDES

A. Spray Quench for the condensation and removal of water vapor from the exhaust gases of the rotary dryer.

1.2 RELATED SECTIONS

A. Section 09900 - Painting General
B. Section 13200 - General Tanks and Vessels
C. Section 15050 - Piping and Accessories
D. Section 16900 - Instrumentation and Controls
E. Division 16 - Electrical.

1.3 REFERENCES, CODES, AND STANDARDS

A. American Society for Testing and Materials (ASTM):
   1. ASTM A36/A36M Standard Specification for Structural Steel.

B. American Welding Society (AWS)

C. Uniform Building Code (UBC).

1.4 SYSTEM DESCRIPTION

A. Design Requirements

The spray quench system will be required to quench, remove water vapor and large particulate carryover from the exhaust gas of the rotary dryer.

1.5 SUBMITTALS

A. Shop Drawings: Indicate dimensions; sizes; weights and point loadings; material thickness, and locations, sizes.

B. Product Data: Provide data indicating rated capacities and accessories.

C. Manufacturer's Installation Instructions: Indicate assembly and installation instructions sufficient to facilitate efficient assembly.

D. Design Calculations: For material thickness and supports for wind, seismic and snow loadings. Calculations shall be provided for determination of diameter of the quench chamber, the design and geometry of packing material (if applicable), drain size.

E. Operation and Maintenance Data: Include operation and maintenance instructions and spare parts list (10 copies).

F. Certificate: Certify that the equipment meets or exceeds the requirements of this specification.

G. Spare parts list for one year and five year operation.

1.6 DELIVERY, STORAGE AND HANDLING

A. Store in a clean, dry place and protect from weather prior to shipment. Provide protection from weather and damage during transient.

B. Loose items, if any, shall be tagged and delivered in a standard commercial package.

1.7 WARRANTY

A. Warranty: The Quench and its accessory components shall be warranted by the manufacturer including parts and labor.

PART 2 PRODUCTS

2.1 EQUIPMENT

A. Manufacturers
1. Atomizing Systems, Inc.
2. ABB Inc.
3. Vulcan Inc.

B. The gas stream exiting the rotary dryer must be quenched to remove water vapor, large particulate carryover and large molecular weight organic species. The quenching will be accomplished through the use of a spray quench chamber. The quench chamber shall be designed so that water sprays inject approximately 200 gpm into the quenching chamber. The injected water will collect heat from the gas stream, and exit to a series of hydro cyclones prior to passing through a heat exchanger. The heat exchanger will remove the collected heat and return the water for recirculation into the quench chamber. The heat transferred in the heat exchanger will be released to the atmosphere by a cooling tower.

The Exterior of the quench chamber will be constructed of carbon steel or other material suitable for this application. The interior surfaces shall be constructed of an appropriate material for this application, and shall be resistant to high temperature water vapor, acid gas corrosion and particulate abrasion.

The quench shall be designed with an entrance duct in which multiple nozzles will be mounted to provide initial cooling of the gas stream as it enters the quench. The quench shall be designed to operate with a nominal pressure drop of not more than 2" w.c. The diameter and length of the quenching chamber shall be sized to allow sufficient residence time to transfer 6 MMBtu/hr into the water sprays.

The quench shall be designed so that fluids can be drained for winterization and maintenance. The quench chamber shall be equipped with access doors for maintenance and repair. The access doors shall measure at a minimum 3' x 3'.

The supplier shall include a NEMA 4 control panel completely assembled, tested and clearly labeled. The control panel shall be designed to incorporate the entire venturi 120 V control logic / sequence, however, should the scope of supply include additional gas cleaning equipment, the supplier may include other logic / sequence operations in one (1) panel.

The 120 V control panel shall include, at a minimum, the following:

1. Visual and audible alarm indication due to failure of critical items, recycle pump, high sump level, etc...

2. Audible alarm silence without the loss of the visual alarm indication.

3. Alarm reset.

C. Liquid Discharge: The quench will incorporate a drain designed to resist clogging and allow for manual flushing as required to keep the drain path free of buildup.

D. Quenching Capacity: The Spray Quench shall be capable of removing the sensible heat from 16,000 lbs of steam per hour at an entry temperature of 723°F. The system will be capable to recirculating at least 200 gpm of water into the spray nozzles for the purpose of quenching the gas stream and providing continuous flushing of the interior surfaces.

E. Materials: manufacturer's selection of materials for the frame and internals shall be resistant to chloride salts, acid gas concentrations and organic compounds. Flanged connections shall be 150 lb class. Structural steel supports shall be in accordance with ASTM A36/A36M.

F. Welding: Shall be in accordance with ASME BPVC Section IX and AWS.

G. Performance Requirements -

1. System shall be suitable for continuous operation
2. Inlet Conditions:

a.	1)	Mass flow rate:	37,150 lbs/hr
	2)	Volumetric Flowrate:	18,200 ACFM @ 750°F
	3)	Temperature:	450°F to 750°F
	4)	Solids:	600 lbs/hr
	5)	Semi-volatile organic Loading :	1,550 lbs/hr
	6)	Humidity:	80% by volume @ Inlet Temperature

3. Outlet Conditions:

a.	1)	Mass flow rate:	37,000 lbs/hr
	2)	Volumetric Flowrate:	10,500 ACFM @ 220°F
	3)	Temperature:	130°F to 220°F
	4)	Solids:	550 lbs/hr
	5)	Humidity:	Saturated at outlet temperature

4. Static Design Pressure: -60 in. w.c.

H. All equipment shall be provided with lifting and hold down lugs.

I. Static pressure taps shall be provided to check the pressure drop across the system.

J. Equipment/structural design shall provide for loads as specified below:

1. Roof, live load: 20 psf
2. Platforms and walkways, live load: 75 psf.
3. Wind load: 80 mph basic wind speed
   Exposure "C"
   Importance Factor 1.15
4. Seismic load: Use provisions of the Uniform Building Code, using Seismic Zone 1 and Importance Factor 1.25. W (total seismic load) shall include all normal operating contents, piping and attachments.
5. Shop drawings shall state the vertical loads and lateral forces used (wind and seismic) in the design.

2.2 FABRICATION

A. Prior to shipment, the equipment shall be cleaned of all dirt, dust, grease, grime, weld spatter, and other foreign materials. All burrs and sharp edges shall be ground smooth. Exterior surfaces of steel components shall be primed and painted in accordance with the manufacturer's standard finish. Open-end connections shall be sealed to prevent the entrance of foreign material.

2.3 LABELING

A. Each item shall have a manufacturer's standard nameplate permanently attached at a location which is easily readable. The nameplate shall contain the following information, as applicable:
   1. Item description.
   2. Item number/tag number.
   3. Manufacturer's name.
   4. Purchase order number.
   5. Date of manufacture.
   6. Capacity.

PART 3 EXECUTION

3.1 ERECTION/INSTALLATION

A. Install equipment in accordance with manufacturer's instructions and design drawings.

3.2 FIELD QUALITY ASSURANCE

A. Tests: Perform leak testing to quantify the amount of in leakage during normal operation. If the results are unsatisfactory, the Subcontractor shall adjust or replace the equipment to meet the specification requirements and retest the equipment.

-End of Section-

SECTION 15931

HYDROCYCLONE SYSTEM

PART 1 GENERAL

1.1 SECTION INCLUDES

A. Hydorcyclonic Separation System (S-5009)

1.2 RELATED SECTIONS

A. Section 09900 - Painting General.
B. Section 13201 - ASME Code Tanks and Vessels.
C. Section 13200 - General Tanks and Vessels.
D. Section 15050 - Piping and Accessories.

1.3 REFERENCES, CODES, AND STANDARDS

A. American Society of Mechanical Engineers (ASME) :
   1. ASME Boiler and Pressure Vessel Code (BPVC), Section IX.

B. American Society for Testing and Materials (ASTM):
   1. ASTM A36/A36M Standard Specification for Structural Steel.

C. American Welding Society (AWS):

D. Uniform Building Code (UBC).

1.4 SYSTEM DESCRIPTION

A. Design Requirements
The hydrocyclonic separation system will be required to remove particulate matter from the waste water discharge of the rotary dryer.

1.5 SUBMITTALS

A. Shop Drawings: Indicate dimensions; sizes; weights and point loadings; material thickness, and locations, sizes.

B. Product Data: Provide data indicating rated capacities and accessories.

C. Manufacturer's Installation Instructions: Indicate assembly and installation instructions sufficient to facilitate efficient assembly.

D. Design Calculations: For material thickness and supports for wind, seismic and snow loadings, for determination of diameters and entry dimensions, for evaluation of wear and erosion in cylinders, for determination of effective number of turns prior to discharge, cut diameter, and predicted removal efficiencies for each particle size range.

E. Operation and Maintenance Data: Include operation and maintenance instructions and spare parts list.

F. Certificate: Certify that the equipment meets or exceeds the requirements of this specification.

G. Spare parts list for 1-year and 5-year operation.

1.6 DELIVERY, STORAGE AND HANDLING

A. Store in a clean, dry place and protect from weather prior to shipment. Provide protection from weather and damage during transient.

B. Loose items, if any, shall be tagged and delivered in a standard commercial package.

1.7 WARRANTY

A. Warranty: The hydrocyclonic separator system shall be warranted by the original manufacturer for performance to this specification, construction, and materials.

PART 2 PRODUCTS

2.1 EQUIPMENT

A. Manufacturer
1. KREBS Engineers, Inc.
2. Sanborn Technologies
3. Fuller Company.

B. Two separate Hydrocyclonic Separator Systems consisting of a cluster of fourteen cyclones, seven per side, of staged diameters. The diameters of each cyclone will be sized to accommodate a set operating condition and flowrate. This system will operate with continuous flow rate being supplied to each of the two hydrocyclonic systems. Each individual hydrocyclone system will be equipped with a strainer to remove any large particulates before entering the hydrocyclone cluster.

A control system will report the status of the cyclonic separation system to a local panel. The panel will allow manual override of the control system and report the inlet and outlet pressures of each hydrocyclonic system.

C. Pumping system: Each hydrocyclone unit will be equipped with a system of pumps to handle the sludge and wastewater generated by the system.

D. Collection Efficiency: The collection efficiency of the system should exceed 90 percent at the mass mean diameter of 30 microns and particle density of 120 lbs/ft^3.

E. Materials: Manufacturer's selection of a hardened steel for abrasive dust service. Flanged connections shall be 150 lb class. Structural steel supports shall be in accordance with ASTM A36/A36M.

F. Welding: Shall be in accordance with ASME BPVC Section IX and AWS.

G. Performance Requirements -

1. This system will recirculate the bulk flow to a quench. Therefore, the inlet flows to each hydrocyclonic system will be constant and shall be suitable for continuous operation at each of the following operating conditions.
2. Inlet Conditions:
   a. Operating Condition 1 - process rate of 5 tons/hr.
      1) Mass flow rate: 249,000 lbs/hr
      2) Temperature: 110°F
      3) Solids 150 lbs/hr

   b. Operating Condition 2 - process rate of 10 tons/hr.
      1) Mass flow rate: 498,000 lbs/hr
      2) Temperature: 130°F
      3) Solids 450 lbs/hr

   c. Operating Condition 3 - process rate of 15 tons/hr.
      1) Mass flow rate: 498,000 lbs/hr
      2) Temperature: 150 °F
      3) Solids 675 lbs/hr

   d. Operating Condition 4 - process rate of 30 tons/hr.
      1) Mass flow rate: 498,000 lbs/hr
      2) Temperature: 150 °F
      3) Solids 2,400 lbs/hr
3. Particulate Removal Requirement
   a. Solids removal: 2,000 lbs/hr
   b. Pressure drop across system: not to exceed 20 psig
4. Design Pressure: 80 psig

5. Particle size distribution:

Particle Size Distribution of Rotary Dryer Carryover		
Size Range (microns)	Cumulative Percent Less Than	Percent in Range
<100	100	17
50	83	20
20	63	16
10	47	14
6	33	16
3	17	11
<1	6	6

H. All equipment shall be provided with lifting and hold down lugs.

I. Static pressure taps shall be provided to check the pressure drop across the system and calibrate the control system pressure transducers.

J. Equipment/structural design shall provide for loads as specified below:
1. Platforms and walkways, live load: 75 psf.
2. Wind load: 80 mph basic wind speed
   Exposure "C"
   Importance Factor 1.15.
3. Seismic load: Use provisions of the Uniform Building Code, using Seismic Zone 1 and Importance Factor 1.25 W (total seismic load) shall include all normal operating contents, piping and attachments.
4. Shop drawings shall state the vertical loads and lateral forces used (wind and seismic) in the design.

2.2 FABRICATION

A. Prior to shipment, the equipment shall be cleaned of all dirt, dust, grease, grime, weld spatter, and other foreign materials. All burrs and sharp edges shall be ground smooth. Exterior surfaces of steel components shall be primed and painted in accordance with Section 09900- Painting or the manufacturer's standard finish with IT approval. Open-end connections shall be sealed to prevent the entrance of foreign material.

2.3 LABELING

A. Each item shall have a manufacturer's standard nameplate permanently attached at a location which is easily readable. The nameplate shall contain the following information, as applicable:
   1. Item description.
   2. Item number/Tag number.
   3. Manufacturer's name.
   4. Purchase order number.
   5. Date of manufacture.
   6. Capacity.

PART 3 EXECUTION

3.1 ERECTION/INSTALLATION

A. Install equipment in accordance with manufacturer's instructions and design drawings.

3.2 FIELD QUALITY ASSURANCE

A. Tests: Perform leak testing to ensure that there are no leaks in the hydrocyclone system. Perform pressure drop and solids removal testing across the hydrocyclone system to insure conformance with this specification. If the results are unsatisfactory, the Subcontractor shall adjust or replace the equipment to meet the specification requirements and retest the equipment.

-End of Section-

SECTION 15932

VENTURI/MIST ELIMINATOR

PART 1 GENERAL

1.1 SECTION INCLUDES

A. Venturi scrubber with mist eliminator system for the removal of particulate from the exhaust gas stream of the rotary dryer.

1.2 RELATED SECTIONS

A. Section 09900 - Painting General
B. Section 13200 - General Tanks and Vessels
C. Section 15050 - Piping and Accessories
D. Section 15170 - Motors
E. Section 16900 - Instrumentation and Controls
F. Division 16 - Electrical

1.3 REFERENCES, CODES, AND STANDARDS

A. American Society for Testing and Materials (ASTM):
1. ASTM A36/A36MStandard Specification for Structural Steel

B. American Welding Society (AWS):

1.4 SYSTEM DESCRIPTION

A. Design Requirements
The Venturi system will be required to remove particulate matter from the exhaust gas of the rotary dryer after the contact scrubber.

1.5 SUBMITTALS

A. Shop Drawings: Indicate dimensions; sizes; weights and point loadings; material thickness, and locations, sizes.

B. Product Data: Provide data indicating rated capacities and accessories.

C. Manufacturer's Installation Instructions: Indicate assembly and installation instructions sufficient to facilitate efficient assembly.

D. Design Calculations: For material thickness and supports for wind, seismic and snow loadings. Calculations shall be provided for determination of throat size, fractional size specific collection efficiencies, overall collection efficiency.

E. Operation and Maintenance Data: Include operation and maintenance instructions and spare parts list.

F. Certificate: Certify that the equipment meets or exceeds the requirements of this specification.

1.6 DELIVERY, STORAGE AND HANDLING

A. Store in a clean, dry place and protect from weather prior to shipment. Provide protection from weather and damage during transient.

B. Loose items, if any, shall be tagged and delivered in a standard commercial package.

1.7 WARRANTY

A. Warranty: The Venturi and its accessory components shall be warranted by the manufacturer including parts and labor.

PART 2 PRODUCTS

2.1 EQUIPMENT

A. Manufacturers
1. FLS miljo Inc. (AirPol)
2. ABB Inc.
3. Hydrosonics Inc..

B. The Venturi will be constructed of carbon steel or other material suitable for this application. The mist eliminator section will be housed in, at a minimum, 3/16" plate with appropriate material of construction for this application. The venturi/mist eliminator will be supplied with bolted access doors. Each door is to include safety key interlocks and measure 3 foot square, at a minimum.

The venturi will be designed to operate with a nominal pressure drop of 10" w.c. The throat of the venturi will be manually adjustable to accommodate flowrates between 150% and 75% of the design flowrate.

The venturi will be designed so that fluids can be drained for winterization and maintenance. The mist eliminator section will also be designed to allow gravity drain for winterization. The mist eliminator section will also be designed to allow manual flushing of the system with appropriate solvents and cleaners during down time to remove scaling and organic buildup.

The supplier shall include a NEMA 4 control panel completely assembled, tested and clearly labeled. The control panel shall be designed to incorporate

the entire venturi 120 V control logic / sequence, however, should the scope of supply include additional gas cleaning equipment, the supplier may include other logic / sequence operations in one (1) panel.

The 120 V control panel shall include, at a minimum, the following:

1. Visual and audible alarm indication due to failure of critical items, recycle pump, etc.

2. Audible alarm silence without the loss of the visual alarm indication.

3. Alarm reset.

C. Liquid Discharge: The venturi will incorporate a drain designed to resist clogging and allow for manual flushing as required to keep the drain path free of buildup.

D. Collection Efficiency: The overall collection efficiency of the system shall exceed 97 percent across the entire particle size distribution.

E. Materials: manufacturer's selection of materials for the frame and internals shall be resistant to chloride salts. Flanged connections shall be 150 lb class. Structural steel supports shall be in accordance with ASTM A36/A36M.

F. Welding: Shall be in accordance with ASME BPVC Section IX and AWS.

G. Performance Requirements -
   1. System shall be suitable for continuous operation
   2. Inlet Conditions:
      a. 1) Mass flow rate: 10,000 lbs/hr
         2) Volumetric Flowrate: 1,950 ACFM @ 85°F
         3) Temperature: 70°F to 130°F
         4) Solids: 400 lbs/hr
         5) Semi-volatile organic Loading : 800 lbs/hr
         6) Humidity: Saturated at Inlet Temperature
   3. Particulate Removal Requirement
      a. Solids removal: 400 lbs/hr
      b. Pressure drop across system: not to exceed 10 in. w.c.
   4. Static Design Pressure: -60 in. w.c.
   5. Particle size distribution:

Particle Size Distribution of Rotary Dryer Carryover		
Size Range (microns)	Cumulative Percent Less Than	Percent in Range
<100	100	0.89
50	99.9+	4.414
20	99.8	12.92
10	99.45	19.78
6	98.76	28.38
3	86.56	21.56
<1	63.75	12.05

H. All equipment shall be provided with lifting and hold down lugs.

I. Static pressure taps shall be provided to check the pressure drop across the system.

J. Equipment/structural design shall provide for loads as specified below:
1. Roof, live load: 20 psf
2. Platforms and walkways, live load: 75 psf.
3. Wind load: 80 mph basic wind speed
   Exposure "C"
   Importance Factor 1.15
4. Seismic load: Use provisions of the Uniform Building Code, using Seismic Zone 1 and Importance Factor 1.25. W (total seismic load) shall include all normal operating contents, piping and attachments.
5. Shop drawings shall state the vertical loads and lateral forces used (wind and seismic) in the design.

2.2 FABRICATION

A. Prior to shipment, the equipment shall be cleaned of all dirt, dust, grease, grime, weld spatter, and other foreign materials. All burrs and sharp edges shall be ground smooth. Exterior surfaces of steel components shall be primed and painted in accordance with the manufacturer's standard finish. Open-end connections shall be sealed to prevent the entrance of foreign material.

2.3 LABELING

A. Each item shall have a manufacturer's standard nameplate permanently attached at a location which is easily readable. The nameplate shall contain the following information, as applicable:
   1. Item description.
   2. Item number/tag number.
   3. Manufacturer's name.
   4. Purchase order number.
   5. Date of manufacture.
   6. Capacity.

PART 3 EXECUTION

3.1 ERECTION/INSTALLATION

A. Install equipment in accordance with manufacturer's instructions and design drawings.

3.2 FIELD QUALITY ASSURANCE

A. Tests: Perform leak testing to quantify the amount of in leakage during normal operation. Perform pressure drop and solids removal testing across the system to insure conformance with this specification. If the results are unsatisfactory, the Subcontractor shall adjust or replace the equipment to meet the specification requirements and retest the equipment.

-End of Section-

SECTION 15933

CONTACT SCRUBBER

PART 1 GENERAL

1.1 SECTION INCLUDES

A. Contact Scrubber to remove heat, acid gases, soluble organics, and water condensate from the exhaust gas stream of the rotary dryer.

1.2 RELATED SECTIONS

A. Section 09900 - Painting General
B. Section 13200 - General Tanks and Vessels
C. Section 15050 - Piping and Accessories
D. Section 15170 - Motors
E. Section 16900 - Instrumentation and Controls
F. Division 16 - Electrical.

1.3 REFERENCES, CODES, AND STANDARDS

A. American Society for Testing and Materials (ASTM):
1. ASTM A36/A36MStandard Specification for Structural Steel.

B. American Welding Society (AWS):

1.4 SYSTEM DESCRIPTION

A. Design Requirements

The Contact Scrubber will be required to remove heat, acid gases, soluble organics, and water and organic condensate from the exhaust gas of the rotary dryer.

1.5 SUBMITTALS

A. Shop Drawings: Indicate dimensions; sizes; weights and point loadings; material thickness, and locations, sizes.

B. Product Data: Provide data indicating rated capacities and accessories.

C. Manufacturer's Installation Instructions: Indicate assembly and installation instructions sufficient to facilitate efficient assembly.

D. Design Calculations: For material thickness and supports for wind, seismic and snow loadings. Calculations shall be provided for determination of diameter, height, tray or packing efficiency for all pollutants of concern, anticipated heat transfer, and overall collection efficiency.

E. Operation and Maintenance Data: Include operation and maintenance instructions and spare parts list (10 copies).

F. Certificate: Certify that the equipment meets or exceeds the requirements of this specification.

G. Spare parts for one year and five year operation.

1.6 DELIVERY, STORAGE AND HANDLING

A. Store in a clean, dry place and protect from weather prior to shipment. Provide protection from weather and damage during transient.

B. Loose items, if any, shall be tagged and delivered in a standard commercial package.

1.7 WARRANTY

A. Warranty: The Contact Scrubber and its accessory components shall be warranted by the manufacturer for parts, equipment performance and labor. The device will be warrantied to remove the specified quantity of heat from the gas stream, at the inlet conditions provided in this specification.

PART 2 PRODUCTS

2.1 EQUIPMENT

A. Manufacturers
1. FLS miljo Inc. (AirPol)
2. ABB Inc.
3. Beltran Associates, Inc.
4. Norton Chemical Process Products

B. The Contact Scrubber will be constructed of stainless steel or other material suitable for this application. The tower shall be supplied with bolted access doors. Each door is to include safety key interlocks and measure 3 foot square, at a minimum.

The Contact Scrubber shall be designed to operate with a nominal pressure drop of no more than 6" w.c. and not to exceed 10" w.c. during transient excursions.

The Contact Scrubber shall be equipped with a pH control system and caustic injection. The system will have the capability to use caustic solutions of up to 30% by weight NaOH.

The Contact Scrubber will be used to sub-cool the gas stream prior to passing through a wet electro-static precipitator. Therefore, the tower shall be designed to transfer 21.2 MMBtu/hr of heat from the gas stream to the recirculated water/scrubber solution. The process water will pass through a heat exchanger prior to being recirculated to the tray tower.

The tower shall be designed so that fluids can be drained for winterization and maintenance. The tower section shall also be designed to allow manual flushing of the system with appropriate solvents and cleaners during down time to remove scaling and organic buildup.

The supplier shall include a NEMA 4 control panel completely assembled, tested and clearly labeled. The control panel shall be designed to incorporate the entire 120 V control logic/sequence, however, should the scope of supply include additional gas cleaning equipment, the supplier may include other logic/sequence operations in one (1) panel.

The 120 V control panel shall include, at a minimum, the following:

1. Visual and audible alarm indication due to failure of critical items, recycle pump, high temperature, low pH, high pH, etc...

2. Audible alarm silence without the loss of the visual alarm indication.

3. Alarm reset.

C. Liquid Discharge: The system shall incorporate a drain designed to resist clogging and allow for manual flushing as required to keep the drain path free of buildup.

D. Collection Efficiency: The overall collection efficiency of the system for acid gases shall exceed 98%. The overall collection efficiency for soluble organics shall exceed 97%.

E. Materials: manufacturer's selection of materials for the frame and internals shall be resistant to chloride salts, inorganic acids and organic solvents. Flanged connections shall be 150 lb class. Structural steel supports shall be in accordance with ASTM A36/A36M.

F. Welding: Shall be in accordance with ASME BPVC Section IX and AWS.

G. Performance Requirements -

1. System shall be suitable for continuous operation
2. Inlet Conditions:

a.	1)	Mass flow rate:	11,000 to 37,000 lbs/hr
	2)	Volumetric Flowrate:	4,900 to 10,600 ACFM @ 220°F
	3)	Temperature:	180 °F to 250 °F
	4)	Solids:	600 lbs/hr max.
	5)	Acid Gas Loading:	200 lbs/hr max.
	6)	Semi-volatile organic Loading :	1,400 lbs/hr
	7)	Humidity:	70% to 85% by volume

3. Outlet Conditions

1)	Mass flow rate:	5,030 to 10,750 lbs/hr
2)	Volumetric Flowrate:	1,700 to 2,100 ACFM @ 85°F
3)	Temperature:	85°F max. Allowable
4)	Acid Gas Loading:	4 lbs/hr
5)	Humidity:	Saturated at Outlet Temperature

4. Acid Gas Removal Requirement

a.	Acid Gas Removal:	192 lbs/hr
b.	Pressure drop across system:	not to exceed 10 in. w.c.

5. Static Design Pressure: -60 in. w.c.

H. All equipment shall be provided with lifting and hold down lugs.

I. Static pressure taps shall be provided to check the pressure drop across the system.

J. Equipment/structural design shall provide for loads as specified below:

1. Roof, live load: 20 psf
2. Platforms and walkways, live load: 75 psf.
3. Wind load: 80 mph basic wind speed
   Exposure "C"
   Importance Factor 1.15
4. Seismic load: Use provisions of the Uniform Building Code, using Seismic Zone 1 and Importance Factor 1.25. W (total seismic load) shall include all normal operating contents, piping and attachments.
5. Shop drawings shall state the vertical loads and lateral forces used (wind and seismic) in the design.

2.2 FABRICATION

A. Prior to shipment, the equipment shall be cleaned of all dirt, dust, grease, grime, weld spatter, and other foreign materials. All burrs and sharp edges

shall be ground smooth. Exterior surfaces of steel components shall be primed and painted in accordance with the manufacturer's standard finish. Open-end connections shall be sealed to prevent the entrance of foreign material.

2.3 LABELING

A. Each item shall have a manufacturer's standard nameplate permanently attached at a location which is easily readable. The nameplate shall contain the following information, as applicable:
   1. Item description.
   2. Item number/tag number.
   3. Manufacturer's name.
   4. Purchase order number.
   5. Date of manufacture.
   6. Capacity.

PART 3 EXECUTION

3.1 ERECTION/INSTALLATION

A. Install equipment in accordance with manufacturer's instructions and design drawings.

3.2 FIELD QUALITY ASSURANCE

A. Tests: Perform leak testing to quantify the amount of in leakage during normal operation. Perform pressure drop testing across the system to insure conformance with this specification. If the results are unsatisfactory, the Subcontractor shall adjust or replace the equipment to meet the specification requirements and retest the equipment.

-End of Section-

SECTION 15934

WET ELECTROSTATIC PRECIPITATOR

PART 1 GENERAL

1.1 SECTION INCLUDES

A. Wet electrostatic precipitator (WESP) system for the removal of sub-micron particulate and organic aerosols from the exhaust gas stream of the rotary dryer.

1.2 RELATED SECTIONS

A. Section 09900 - Painting General
B. Section 13200 - General Tanks and Vessels
C. Section 15050 - Piping and Accessories
D. Section 15173 - Motors
E. Section 15950 - Instrumentation and Controls
F. Division 16.

1.3 REFERENCES, CODES, AND STANDARDS

A. American Society for Testing and Materials (ASTM):
1. ASTM A36/A36M Standard Specification for Structural Steel.

B. American Welding Society (AWS)

C. National Electric Code (NEC)

D. American Society of Mechanical Engineers (ASME)

E. American Society of Civil Engineers (ASCE)

F. Uniform Building Code (UBC).

1.4 SYSTEM DESCRIPTION

A. Design Requirements
The WESP system will be required to remove particulate matter and organic aerosols from the exhaust gas of the rotary dryer.

1.5 SUBMITTALS

A. Shop Drawings: Indicate dimensions; sizes; weights and point loadings; material thickness, and locations, sizes.

B. Product Data: Provide data indicating rated capacities and accessories.

C. Manufacturer's Installation Instructions: Indicate assembly and installation instructions sufficient to facilitate efficient assembly.

D. Design Calculations: For material thickness and supports for wind, seismic and snow loadings. Calculations shall be provided for determination of plate area, collector length, overall collection efficiency, and drift velocity.

E. Operation and Maintenance Data: Include operation and maintenance instructions and spare parts list. (10 copies)

F. Certificate: Certify that the equipment meets or exceeds the requirements of this specification.

G. Spare parts list for one year and five year operation.

1.6 DELIVERY, STORAGE AND HANDLING

A. Store in a clean, dry place and protect from weather prior to shipment. Provide protection from weather and damage during transient.

B. Loose items, if any, shall be tagged and delivered in a standard commercial package.

1.7 WARRANTY

A. Warranty: The WESP and its accessory components shall be warranted by the manufacturer including parts and labor.

PART 2 PRODUCTS

2.1 EQUIPMENT

A. Manufacturers
1. FLS miljo Inc. (AirPol)
2. ABB Inc.
3. Beltran Inc.

B. The WESP will be housed in, at a minimum, 3/16" plate with appropriate material of construction for this application. The WESP will be supplied with bolted access doors, one (1) in the upper section for access to the high voltage frame and flushing header and one (1) in the lower section for access to the bottom drain. Each door is to include safety key interlocks and measure 3 foot square, at a minimum.

A WESP inlet gas distribution device is required to perform distribution and straightening of the gases prior to entering the collecting tubes. Straightening only devices such as egg crating, turning vanes and/or cyclonic action devices are not acceptable.

The Wet ESP internal high voltage support frame shall span the insulators located in the insulator compartments and shall be designed to suspend the rigid discharge electrodes into each collecting tube. The construction shall be structural tubing and material selection shall be appropriate for this application and include all necessary discharge electrode alignment hardware.

The discharge electrodes shall be rigid type, meaning no bottom weights, lower alignment and/or lower support frame is required. Corona intensity devices with proper size and spacing to prevent current suppression and/or electrical interference shall be placed along the length of each discharge electrode.

The quantity, diameter and effective length of the collecting electrodes shall be determined by the required removal efficiency as stated in the specifications. The selection is to also include the purge air volume in addition to the inlet process gas volume.

The collecting electrodes shall be round tubes and bundled together in each WESP module. The geometric relationship between the collecting tube and discharge electrode shall be uniform, the gap between the tubes and discharge electrodes will be equal dimensions on all sides.

The Wet ESP outlet is to be designed to eliminate re-entrainment of collected material during all phases of operation, i.e: normal operation and intermittent flushing. The use of mesh pads and/or chevron type mist eliminators are not acceptable.

The outlet is to include a bolted door for access to the bottom drain and for checking electrode alignment. Each door is to include safety key interlocks and measure a minimum 3-foot square.

Bolted construction is required for the Wet ESP vessel shell sections and the internals are to be installed prior to shipment, thereby, resulting in a flange to flange module delivered to the site.

Each WESP module is to include a flushing system for removal of the collected material on an intermittent or continuous basis. The flushing system is to include an internal header with hydraulic spray nozzles, field valving consisting of isolation ball valve/pressure regulator/ solenoid valve/pressure gauge and flip-flop type timer or timing PLC logic located in the 120 V

control panel. The spray nozzles are to be strategically located for full coverage of each collecting internal surface area.

The flushing operation shall be automatic with a manual over-ride and the timer or timing logic is to be field adjustable in frequency and duration. Flushing mode of operation is to be on-line meaning the high voltage is to remain energized.

The flushing water flow rate shall be 1 to 1.5 gpm per collecting tube. The material of construction is to be appropriate for this application.

The transformer rectifier (T/R) shall be properly sized to generate the proper secondary DC voltage (kV) and current (mA) for the Wet ESP module. One (1) T/R is to be supplied per module. The T/R supplier shall be a U. S. based manufacturer maintaining control over all aspects of the design, production, service and spare parts. The T/R set shall be Silicone or Mineral Oil liquid immersed type suitable for outdoor installation.

All electrical connections to the T/R set shall terminate in either a NEMA 4 or NEMA 3R low voltage junction box which is to be mounted on the side of the tank. A NEMA 3R box shall be used when the current limiting reactor is located in the low voltage junction box in order to provide adequate ventilation/cooling.

All Wet ESP vessel flanges and high voltage bus flanges shall include two (2) stainless steel straps or clips. Each strap or clip must bolt across the mating flanges. Paint removal is required at all areas where the flanges are painted.

The Wet ESP supplier shall include a NEMA 4 control panel completely assembled, tested and clearly labeled. The control panel shall be designed to incorporate the entire Wet ESP 120 V control logic/sequence, however, should the scope of supply include additional gas cleaning equipment, the supplier may include other logic/sequence operations in one (1) panel.

The 120 V control panel shall include, at a minimum, the following:

1. Individual insulator temperature controllers with indication.
2. Automatic flushing timer with adjustable frequency and duration capability. Flushing mode of operation indication shall also be supplied.
3. Irrigation system energization/de-energization with indication lights.
4. Purge blower energization/de-energization with indication lights.
5. Indication of high voltage status.
6. Visual and audible alarm indication due to failure of critical items, i.e: purge blower, T/R, recycle pump, etc...
7. Audible alarm silence without the loss of the visual alarm indication.
8. Alarm reset.

C. Liquid Discharge: The WESP will incorporate a drain designed to resist clogging and allow for manual flushing as required to keep the drain path free of buildup.

D. Collection Efficiency: The overall collection efficiency of the system shall exceed 99.9 percent across the entire particle size distribution.

E. Materials: manufacturer's selection of materials for the frame and internals shall be resistant to chloride salts. Flanged connections shall be 150 lb class. Structural steel supports shall be in accordance with ASTM A36/A36M.

F. Welding: Shall be in accordance with ASME BPVC Section IX and AWS.

G. Performance Requirements -
1. System shall be suitable for continuous operation
2. Inlet Conditions:
   a. 1) Mass flow rate: 9,000 lbs/hr
      2) Temperature: 85°F
      3) Solids: 50 lbs/hr
      4) Organic aerosol: 450 lb/hr
      5) Volumetric flow rate: 2,000 acfm
3. Particulate Removal Requirement
   a. Solids removal: 50 lbs/hr
   b. Pressure drop across system: not to exceed 2 in. w.c.
4. Design Pressure: -60 in. w.c.
5. Particle size distribution:

Particle Size Distribution of Rotary Dryer Carryover		
Size Range (microns)	Cumulative Percent Less Than	Percent in Range
<100	100	.004
50	99.9+	.037
20	99.8	0.5
10	99.45	0.7
6	98.76	12.2
3	86.56	22.8
<1	63.75	63.6

H. All equipment shall be provided with lifting and hold down lugs.

I. Static pressure taps shall be provided to check the pressure drop across the system.

J. Equipment/structural design shall provide for loads as specified below:
1. Roof, live load: 20 psf
2. Platforms and walkways, live load: 75 psf.
3. Wind load: 80 mph basic wind speed
Exposure "C"
Importance Factor 1.15
4. Seismic load: Use provisions of the Uniform Building Code, using Seismic Zone 1 and Importance Factor 1.25. W (total seismic load) shall include all normal operating contents, piping and attachments.
5. Shop drawings shall state the vertical loads and lateral forces used (wind and seismic) in the design.

2.2 FABRICATION

A. Prior to shipment, the equipment shall be cleaned of all dirt, dust, grease, grime, weld spatter, and other foreign materials. All burrs and sharp edges shall be ground smooth. Exterior surfaces of steel components shall be primed and painted in accordance with Section 09900 - Painting or the manufacturer's standard finish approved by IT. Open-end connections shall be sealed to prevent the entrance of foreign material.

2.3 LABELING

A. Each item shall have a manufacturer's standard nameplate permanently attached at a location which is easily readable. The nameplate shall contain the following information, as applicable:
1. Item description.
2. Item number/Tag number.
3. Manufacturer's name.
4. Purchase order number.
5. Date of manufacture.
6. Capacity.

PART 3 EXECUTION

3.1 ERECTION/INSTALLATION

A. Install equipment in accordance with manufacturer's instructions and design drawings.

3.2 FIELD QUALITY ASSURANCE

A. Tests: Perform leak testing to quantify the amount of in leakage during normal operation. Perform pressure drop and solids removal testing across the WESP to insure conformance with this specification. If the results are unsatisfactory, the Subcontractor shall adjust or replace the equipment to meet the specification requirements and retest the equipment.

-End of Section-

SECTION 15936

OIL /WATER SEPARATOR SYSTEM

PART 1 GENERAL

1.1 SECTION INCLUDES

Oil Water Separator System for the removal of free floating oil, grease, and oily coated solids from the condensate blowdown of the gas cleaning system settling tank.

1.2 RELATED SECTIONS

A. Section 09900 - Painting General
B. Section 13200 - General Tanks and Vessels
C. Section 15050 - Piping and Accessories
D. Section 16900 - Instrumentation and Controls
E. Division 16 - Electrical.

1.3 REFERENCES, CODES, AND STANDARDS

A. American Society for Testing and Materials (ASTM):
   1. ASTM A36/A36M Standard Specification for Structural Steel.

B. American Welding Society (AWS)

C. Uniform Building Code (UBC)

D. American Petroleum Institute (API)

1.4 SYSTEM DESCRIPTION

A. Design Requirements
The Oil Water Separator System will remove the free floating oil, grease, and oily coated solids from the condensate blowdown of the gas cleaning system settling tank. The separator will effectively separate oils and solids from water where the oil and solids have a specific gravity different than that of water.

1.5 SUBMITTALS

A. Shop Drawings: Indicate dimensions; sizes; weights and point loadings; material thickness, and locations, sizes.

B. Product Data: Provide data indicating rated capacities and accessories.

C. Manufacturer's Installation Instructions: Indicate assembly and installation instructions sufficient to facilitate efficient assembly.

D. Design Calculations: For material thickness and supports for wind, seismic and snow loadings. Calculations shall be provided for determination of residence time, separation efficiency, the design and geometry of packing material (if applicable), drain sizes.

E. Operation and Maintenance Data: Include operation and maintenance instructions and spare parts list (10 copies).

F. Certificate: Certify that the equipment meets or exceeds the requirements of this specification.

G. Spare parts list for one year and five year operation.

1.6 DELIVERY, STORAGE AND HANDLING

A. Store in a clean, dry place and protect from weather prior to shipment. Provide protection from weather and damage during transient.

B. Loose items, if any, shall be tagged and delivered in a standard commercial package.

1.7 WARRANTY

A. Warranty: The Oil/Water Separator and its accessory components shall be warranted by the manufacturer including parts and labor.

PART 2 PRODUCTS

2.1 EQUIPMENT

A. Manufacturers
1. Mercer International, Inc.
2. Highland Tank and Mfg. Co.
3. Great Lakes Environmental, Inc.

B. The condensate blowdown exiting the settling tank on the gas cleaning system must be treated to separate water from large molecular weight organic species and settleable solids. The separation will be accomplished through the use of an oil/water separator system. The oil/water separator shall be designed so that water flows in at approximately 50 gpm into the oil/water separator diffusion chamber where the larger solids drop out. The water will flow through a parallel corrugated plate coalescer where the oil droplets will collide with the plates and coalescence. The coalesced oil will have the path of least resistance

and will float to the surface in the oil/water separation chamber. As the oil layer increases, oil spills over a weir into an oil reservoir. The water will then flow through a second more dense coalescing pack/filter and into the water reservoir.

The exterior of the oil/water separator will be constructed of carbon steel or other material suitable for this application. The interior surfaces shall be constructed of an appropriate material for this application, and shall be resistant to high temperature oil/water.

The oil/water separator system shall include all pumps, piping, valves, instrumentation etc. to ensure proper operation. The quench shall be designed to operate with a flowrate of 50 gallons per minute.

The oil/water separation system shall be designed so that fluids can be drained for winterization and maintenance. The oil/water separator shall be equipped with access doors for maintenance and repair. The access doors shall measure at a minimum 3' x 3'.

The supplier shall include a NEMA 4 control panel completely assembled, tested and clearly labeled. The control panel shall be designed to incorporate the entire venturi 120 V control logic / sequence, however, should the scope of supply include additional gas cleaning equipment, the supplier may include other logic / sequence operations in one (1) panel.

The 120 V control panel shall include, at a minimum, the following:

1. Visual and audible alarm indication due to failure of critical items, recycle pump, high sump level, etc...

2. Audible alarm silence without the loss of the visual alarm indication.

3. Alarm reset.

C. Liquid Discharge: The oil/water separator system will incorporate a drain designed to resist clogging and allow for manual flushing as required to keep the drain path free of buildup.

D. Materials: manufacturer's selection of materials for the frame and internals shall be resistant to organic compounds. Flanged connections shall be 150 lb class. Structural steel supports shall be in accordance with ASTM A36/A36M.

E. Welding: Shall be in accordance with ASME BPVC Section IX and AWS.

F. Performance Requirements -

1. System shall be suitable for continuous operation
2. Inlet Conditions:
   a. 1) Mass flow rate: 20,153 lbs/hr
      2) Volumetric Flowrate: 40 GPM @ 150°F
      3) Temperature: 100°F to 170°F
      4) Semi-volatile organic Loading : 1,073 lbs/hr

3. Outlet Conditions Oil:
   a. 1) Mass flow rate: 1,151 lbs/hr
      2) Volumetric Flowrate: 3 GPM @ 120°F
      3) Temperature: 80°F to 150°F
      4) Semi-volatile organic Loading : 1,051 lbs/hr

4. Outlet Conditions Water:
   a. 1) Mass flow rate: 18,490 lbs/hr
      2) Volumetric Flowrate: 36.9 GPM @ 120°F
      3) Temperature: 80°F to 130°F
      4) Semi-volatile organic Loading : 22 lbs/hr

5. Static Design Pressure: 10 psig

H. All equipment shall be provided with lifting and hold down lugs.

I. Static pressure taps shall be provided to check the pressure drop across the system.

J. Equipment/structural design shall provide for loads as specified below:
   1. Roof, live load: 20 psf
   2. Platforms and walkways, live load: 75 psf.
   3. Wind load: 80 mph basic wind speed
      Exposure "C"
      Importance Factor 1.15
   4. Seismic load: Use provisions of the Uniform Building Code, using Seismic Zone 1 and Importance Factor 1.25. W (total seismic load) shall include all normal operating contents, piping and attachments.
   5. Shop drawings shall state the vertical loads and lateral forces used (wind and seismic) in the design.

2.2 FABRICATION

A. Prior to shipment, the equipment shall be cleaned of all dirt, dust, grease, grime, weld spatter, and other foreign materials. All burrs and sharp edges

shall be ground smooth. Exterior surfaces of steel components shall be primed and painted in accordance with the manufacturer's standard finish. Open-end connections shall be sealed to prevent the entrance of foreign material.

2.3 LABELING

A. Each item shall have a manufacturer's standard nameplate permanently attached at a location which is easily readable. The nameplate shall contain the following information, as applicable:
   1. Item description.
   2. Item number/tag number.
   3. Manufacturer's name.
   4. Purchase order number.
   5. Date of manufacture.
   6. Capacity.

PART 3 EXECUTION

3.1 ERECTION/INSTALLATION

A. Install equipment in accordance with manufacturer's instructions and design drawings.

3.2 FIELD QUALITY ASSURANCE

A. Tests: Perform leak testing to quantify the amount of leakage during normal operation. If the results are unsatisfactory, the Subcontractor shall adjust or replace the equipment to meet the specification requirements and retest the equipment.

-End of Section-

SECTION 15939

STACK

PART 1 GENERAL

1.1 SECTION INCLUDES

A. Vent Stack (X-5001)
B. Furnace Stack (X-2001)

1.2 RELATED SECTIONS

A. Section 09900 - Painting General
B. Section 13200 - General Tanks and Vessels
C. Section 13202 - FRP Equipment

1.3 REFERENCES

A. UBC - Uniform Building Code.

B. NFPA 82 - Standard on Incinerators: Waste and Linen Handling Systems and Equipment.

C. UL 441 - Standard for Gas Vents.

D. UL 641 - Standard for Low Temperature Venting Systems.

1.4 SYSTEM DESCRIPTION

A. Design Requirements

1. The Vent Stack (X-5001) will conduct flue gases from the gas cleaning system to the atmosphere. The Furnace Stack (X-2001) will conduct gases from the Dryer burners to atmosphere.
2. Design stacks for windload: 80 mph basic wind speed
   Exposure "C"
   Importance Factor 1.15
   Seismic Load: Seismic Zone 1
   Importance Factor 1.25
3. Materials: CS or FRP
4. Connections: As required for CEM systems and emission testing requirements. Refer to attached specification sheets.

1.5 SUBMITTALS FOR REVIEW

A Shop Drawings: Indicate general construction, dimensions, weights, and supports. Submit layout drawings indicating plan view and elevations.

B. Product Data: Provide data including dimensions and weights, and connection requirements.

C. Submit manufacturer's installation instructions: Indicate assembly, support details, and connection requirements.

D. Manufacturer's Certificate: Certify that stack meets or exceeds specified requirements.

1.6 QUALITY ASSURANCE

A. Manufacturer Qualifications: Company specializing in manufacturing the Products specified in this section with minimum three years experience.

B. Installer Qualifications: Company specializing in performing the work of this section with minimum three years experience.

C. Design stack under direct supervision of a Professional Structural Engineer experienced in design of this Work and licensed at the place where the Project is located.

1.7 REGULATORY REQUIREMENTS

A. Emission Testing Requirements on Vent Stack are expected to include the following, as required:
1. Method 5 (M-5) sampling train.
2. Modified Method 5 (MM-5) sampling train.
3. VOST
4. Method 8 sampling train.
5. Method 15 semi-continuous GC.
6. Method 114 for radionuclides and radon.
7. CEM/CAM

B. Emission Testing Requirements on Furnace Stack are expected to include the following, as required:
1. Method 5 (M-5) sampling train for particulate
2. CEM for NO2 and CO2

PART 2 PRODUCTS

2.1 PERFORMANCE

A. Vent Stack

1.	Service:	Flue Gas.
2	Temperature:	100 - 140 degrees F.
3.	Flow:	3,500 - 5,300 acfm.
4.	Diameter:	20 inches.
5.	Height:	60 feet

B. Furnace Stack

1.	Service:	Furnace Stack Gas.
2	Temperature:	500 - 600 degrees F.
3.	Flow:	2,908 - 47,181 acfm.
4.	Diameter:	32 inches.
5.	Height:	60 feet

PART 3 EXECUTION

3.1 INSTALLATION

A. Install in accordance with manufacturer's instructions.
B. Install concrete inserts for support of stack in coordination with formwork.
C. Level and plumb stack.

-End of Section-

ATTACHMENT A

STACK DATA SHEETS

I.T. CORPORATION

VERTICAL VESSEL SPECIFICATION

NO	BY	DATE	REV.
A	BAH	12/97	ISSUED FOR REVIEW
B	BAH	2/98	ISSUED FOR EPA REVIEW
1			

IT CORP. SPEC. NO. 773481-X5001
SHEET 1 OF 1
PROJECT NAME: FERNALD WPRAP
JOB NO. 773481
LOCATION: FERNALD, OH

BY	APPR	DATE
BAH	TGB	2/11/98

AREA NO: 50
AREA NAME: GAS CLEANING SYSTEM
TAG NO.: X-5001
EQUIPMENT NAME: VENT STACK

1		Total Volume: Gal.	Field Erected? YES	No. Units: 1(ONE)		
2		Operating Pressure, psig	Atmospheric			
3		Operating Temperature, deg F	120			
4		Diameter	20 inches			
5		Height	60 feet			
6		Design Pressure, psig	Atmospheric			
7	D	Design Temperature, deg F	180			
8	E	Vessel Content:	Flue Gas			
9	S	Hydrostatic Test, psig				
10	I	Shell	Heads Corr. Barrier, inches	None	None	
11	G	Shell	Head Joint Efficiency, %	*	*	
12	N	Code: NONE	Stamp: NO			
13		Radiograph: NONE	Stress Relieve: NO			
14	D	National Board No. N/A				
15	A	Type Supports: Guide Wires				
16	T	Insulation: NONE				
17	A	Fireproofing: NONE				
18		Sandblast: YES	Paint: Spec.# 09900			
19		MANHOLE: Hinged? NO	Davited? NO	Other:		
20		Platform Clips: NO	Ladder Clips: NO	Insul. Rings: NO		
21		Pipe Supports: None				
22		Wind Load: 80 MPH	Seismic: ZONE 1			
23		Weight Empty: * lbs.	Weight Full of Water: N/A lbs.			

		Item	Thickness	Mat'l Class	Mat'l - Minimum Quality
24					
25		Shell	*	*	*
26	M	Heads			
27	A				
28	T				
29	E				
30	R	Nozzle Necks	6" minimum		*
31	I	Flanges	*		*
32	A	Coupling			
33	L	M.H. Cover			
34	S	Supports	*		*
35		Bolts/Studs	A-307		GR C
36		Nuts	Steel		Heavy Hex.
37		Gaskets	1/8" Teflon or		Gortex

		Service	Mark	No.	Size	Rating	Face	Type
38								
39	N	Inlet	A	1	20'	ITSTD	FF	Flg.
40	O	Sample Port	B	2	4"	150#	RF	Flg.
41	Z	Sample Port	C	2	4"	150#	RF	Flg.
42	Z	CEM/Sample Port	D	2	4"	150#	RF	Flg.
43	L	Sample Port	E	1	4"	150#	RF	Flg.
44	E	Drain	F	1	2"	150#	RF	Flg.
45								
46	S							
47	C							
48	H							
49	E							
50	D							
51	U							
52	L							
53	E							
54								
55								

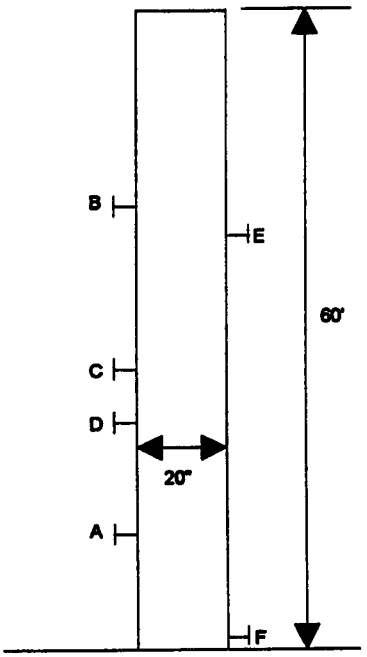

NOTE 1: Vendor to complete information marked *
NOTE 2: Nozzle elevations to follow.

L:\common\bhalley\eqspc\AREA50A.XLS - X-5001

2/11/1998 1:22 PM

I.T. CORPORATION

VERTICAL VESSEL SPECIFICATION

NO	BY	DATE	REV.
A	BAH	12/97	ISSUED FOR REVIEW
B	BAH	2/98	ISSUED FOR EPA REVIEW
1			

IT CORP. SPEC. NO. 773481-X2001
SHEET 1 OF 1
PROJECT NAME: FERNALD WPRAP
JOB NO. 773481
LOCATION: FERNALD, OH

BY	APPR	DATE
BAH	TGB	2/11/98

AREA NO: 20
AREA NAME: INDIRECT DRYER SYSTEM
TAG NO.: X-2001
EQUIPMENT NAME: FURNACE STACK

1		Total Volume: Gal.	Field Erected? YES	No. Units: 1(ONE)	
2		Operating Pressure, psig	Atmospheric		
3		Operating Temperature, deg F	600		
4		Diameter	32 inches ID		
5		Height	60 feet		
6		Design Pressure, psig	Atmospheric		
7	D	Design Temperature, deg F	700		
8	E	Vessel Content:	Furnace Stack Gas		
9	S	Hydrostatic Test, psig			
10	I	Shell / Heads Corr. Barrier, inches	None	None	
11	G	Shell / Head Joint Efficiency, %	*	*	
12	N	Code: NONE	Stamp: NO		
13		Radiograph: NONE	Stress Relieve: NO		
14	D	National Board No. N/A			
15	A	Type Supports: Guide Wires			
16	T	Insulation: YES surface temp 125F			
17	A	Fireproofing: NONE			
18		Sandblast: YES	Paint: Spec.# 09900		
19		MANHOLE: YES Hinged? NO	Davited? NO	Other:	
20		Platform Clips: NO	Ladder Clips: NO	Insul. Rings: NO	
21		Pipe Supports: None			
22		Wind Load: 80 MPH	Seismic: ZONE 1		
23		Weight Empty: * lbs.	Weight Full of Water: N/A lbs.		

		Item	Thickness	Mat'l Class	Mat'l - Minimum Quality
24					
25		Shell	*	*	*
26	M	Heads			
27	A				
28	T				
29	E				
30	R	Nozzle Necks	6" minimum		*
31	I	Flanges	*		*
32	A	Coupling			
33	L	M.H. Cover			
34	S	Supports	*		*
35		Bolts/Studs	A-307		GR C
36		Nuts	Steel		Heavy Hex.
37		Gaskets	1/8" Teflon or		Gortex

		Service	Mark	No.	Size	Rating	Face	Type
38								
39	N	Inlet	A	1	32"	ITSTD	FF	Flg.
40	O	Sample Port	B	2	4"	150#	RF	Flg.
41	Z	Sample Port	C	2	4"	150#	RF	Flg.
42	Z	CEM/Sample Port	D	0	4"	150#	RF	Flg.
43	L	Sample Port	E	0	4"	150#	RF	Flg.
44	E	Drain	F	1	2"	150#	RF	Flg.
45								
46	S							
47	C							
48	H							
49	E							
50	D							
51	U							
52	L							
53	E							
54								
55								

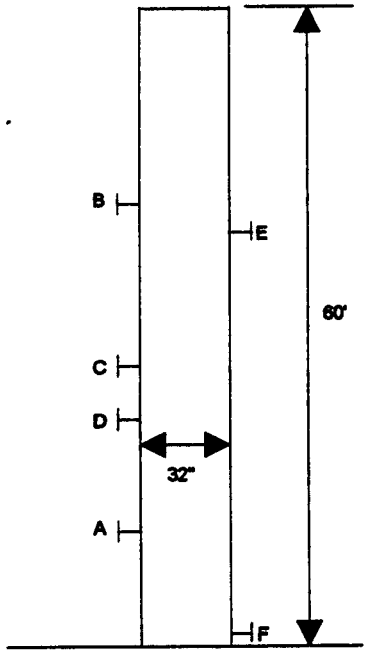

NOTE 1: Vendor to complete information marked *
NOTE 2: Nozzle elevations to follow.

SECTION 16900

INSTRUMENTATION AND CONTROL

PART 1 GENERAL

1.1 SECTION INCLUDES

A. This specification describes the instrumentation equipment and installation for skid-mounted and packaged process units and field installed instruments. The work shall include installation of all instruments.

B. The instrumentation system shall be completely installed, wired, tested, and ready for operation after cable and wire connections are made to external power and devices by others.

C. The client-furnished instrumentation drawings are complementary documents to this specification. Any items shown as part of the packaged equipment on those drawings shall be furnished and installed whether itemized in this specification or not.

1.2 RELATED SECTIONS

A. Section 16050 - Basic Materials and Methods
B. Section 16111 - Conduit
C. Section 16130 - Boxes and Covers
D. Section 16141 - Wiring Devices
E. Section 16160 - Equipment Cabinets and Enclosures
F. Section 16180 - Electrical Construction Miscellaneous Equipment
G. Section 16950 - Electrical Testing

1.3 REFERENCES, CODES, AND STANDARDS

Electrical systems on packaged equipment units shall be designed, installed, and tested in accordance with the most recently issued regulations, standards, recommended practices, and/or codes covering the intended application as issued by or contained in the following:

ANSI- (Series C) American National Standards Institute
API - RP500 A, B, C American Petroleum Institute
IEEE- Institute of Electrical and Electronics Engineers
IES - Illuminating Engineering Society
NEC - National Electric Code

NEMA - National Electrical Manufacturers' Association
NESC - National Electrical Safety Code
NFPA - National Fire Protection Association
NETA - National Electrical Testing Association.

Any additional codes, regulations, and/or standards that are specifically referenced in this specification shall also be followed.

In the event of conflict(s) among the various regulations, standards, recommended practices, and/or codes for any application, the most stringent requirement(s) shall apply.

1.4 SUBMITTALS

A. Instrument Equipment List
   1. Contractor shall use IT's tag numbers in all final documentation.
   2. If the Contractor has supplied any instrumentation that is not supplied by IT, the Contractor shall provide documentation for each instrument which includes as a minimum:
      a. Manufacturer
      b. Model number
      c. Scale range
      d. Calibration range
      e. Set point
      f. Process conditions
      g. Electrical area classification rating
      h. Materials of construction
      I. Instruction, installation and maintenance manuals
      j. Spare parts lists.

B. Instrument Tagging
   1. Contractor shall tag all instruments with a 316 stainless steel tag stamped with the IT tag number. The tag shall be affixed to the instrument with stainless steel drive pins or stainless steel wire in such a manner that it need not be removed to install, remove, or service the instrument.

1.7 PREPARATION FOR SHIPMENT

A. Ship Loose Components
   1. All ship loose components shall be removed, tagged, and packaged for shipment by Contractor prior to shipment. Instructions for reassembly shall be provided.

B. Enclosures

1. Prior to shipment, Contractor shall ensure that all instrumentation conduit connections are tight and that enclosure doors are bolted shut.
2. Instrumentation panels including motor starters, circuit breakers, and control panels shall receive special attention to ensure against damages caused by transit.
3. All enclosures shall have "water guard" desiccant installed prior to shipment in order to minimize corrosion due to moisture for a minimum period of 6 months.

C. Preparation for Shipment

1. Instrumentation and instrumentation equipment subject to damage in transit shall be removed, tagged, and packaged to avoid damage. All openings or cable ends exposed as a result of such removal shall be properly identified and protected for shipment.
2. Conduit openings and cable ends shall be protected with conduit plugs, fittings, or duct tape.
3. Loose instruments shall be packed in shipping crates that are dust tight, moisture resistant, and substantial enough to prevent damage to the equipment from shipment and warehouse handling. Shipping containers shall be clearly marked with the IT instrument tag number.
4. Instruments which are subject to damage during shipping shall be dismounted and packaged in the manufacturer's original shipping container. Shipping containers shall be clearly marked with the IT instrument tag numbers. All separately boxed instruments shall be shown on the bill of lading.

D. Instrument Mounting

1. IT desires to minimize the amount of field installation of packaged instrumentation. The Contractor shall mount, pipe, tube and wire all instruments to the maximum extent possible. Items which cannot be installed for shipping purposes shall be shipped loose for field assembly.

E. Approval for Shipment

1. Approval to ship the unit shall be provided when all acceptance test punch list items have been resolved to the satisfaction of IT.

PART 2 PRODUCTS

2.1 MATERIALS OF CONSTRUCTION

All materials, devices, and equipment used for the electrical systems shall be listed, labeled, and/or certified for the intended application by one or more of the following:

CSA - Canadian Standards Association
FM - Factory Mutual
UL - Underwriters Laboratories, Inc.

2.2 FABRICATION

A. Rigid Conduit

1. Conduits used for electrical installations shall be heavy wall, rigid, steel conduit, which shall bear the UL label. The minimum size conduit used shall be 3/4-inch inside diameter.
2. All threaded conduit and fittings shall be made up tight without exposed threads. Threads shall be coated with an approved metal oxide paint or threaded lubricant for weatherproof joint.
3. Conduits shall be installed parallel with or at right angles to the structural steel. Field-bent conduit shall have a minimum radius of eight times the internal diameter. The radius of bends shall be taken as the radius of the curve of the inner edge of the elbow. The conduit shall maintain a uniform circular cross-section throughout the bends. Standard radius factory made bends are also acceptable.
4. Drains shall be installed at all low points of vertical or long horizontal runs of conduit. All horizontal conduits shall be sloped for drainage. Drains shall be Crouse-Hinds Type ECD15 or IT-approved equal.
5. Fittings and box covers shall be installed with the cover opening in the vertical plane or downward in the horizontal plane. Access and removal of cover openings shall not be blocked by other skid obstructions.
6. Insulating bushings shall be installed to protect wires and cables entering boxes and enclosure except where insulation protection is provided as part of the entrance connection.
7. Unions shall be installed as required to facilitate the removal of equipment for maintenance.
8. Rigid conduit shall be supported in accordance with NEC Article 346-12.
9. There shall be no more than the equivalent of four quarter bends (360 degrees total) between pull points.
10. Conduits shall be swabbed clean prior to pulling wire and cables. A wire lubricant can be used when required to aid pulling of wire and cable. Approved lubricants are Burndy "Slikon" and Ideal "Wire Lube" or "Yellow 77."
11. Conduit entry into j-boxes, control panels, motor starters, and other enclosures shall enter through the bottom of each enclosure to prevent water entry. All unused taps shall be equipped with recessed head conduit plugs. All spare conduit shall be terminated with a coupling and plug, or capped, as required.

12. All conduits shall be spaced a minimum of 12 inches to the side of, or 24 inches above, any hot line, fitting, or vessel above 130°F unless an insulating barrier is provided.

B. Flexible Conduit

1. Liquid-tight flexible metal conduit shall have moisture and oil resistance polyvinyl chloride (PVC) outer jacket extruded over galvanized steel flexible conduit. Conduit fittings shall be Crouse-Hinds type LT or approved equal. The maximum length of flexible conduit shall be 36 inches. Properly sized terminating fittings with ground lugs shall be used on the flexible conduit. A bonding jumper of green insulated THW stranded copper conductor, sized in accordance with Section 250 of the NEC, shall be spiraled around the flexible conduit.
2. Liquid-tight flexible conduit shall be minimum 3/4-inch for power circuits and minimum ½-inch for final connection to solenoid valves, transmitters, and miscellaneous instruments.

C. Wire Installation

1. Sufficient lengths of cable, wire, etc., shall be pulled into the panels, J-boxes, etc., to permit making a neat arrangement. Wire shall be secured in a manner to avoid tension on conductors or terminals. Sharp bends over conduit bushings shall not be permitted. Outer jackets of multi-conductor cables shall be removed as required to properly train and terminate the conductors.
2. Cables and wires shall be identified at each end and in J-boxes with identifying numbers called for on drawings and on conduit and cable schedule.
3. All wire connectors and terminals for instrument wiring shall be of the compression type with nylon insulating sleeves. Terminals shall have spade lugs, unless otherwise approved by the client. Connections shall be made only in approved junction boxes in which terminal blocks have been mounted. Wire nuts shall not be used. Crimped butt spikes shall not be used.
4. All wiring, whether for power or control shall be installed in conduit.
5. Conductors used for power and lighting service shall be No. 12 AWG minimum size. Control circuit conductors shall be No. 14 AWG minimum size. Instrumentation and thermocouple circuits shall be sized in accordance with the instrument or thermocouple manufacturer's recommendations, but in no case shall they be smaller than No. 18 AWG.
6. Separate conduits shall be provided for each of the following electrical systems:
   Power circuits (AC)
   Power circuits (DC)
   Control, alarm, and shutdown circuits

Milliamp and/or millivolt instrumentation circuits.

D. Instrumentation Wire
1. Instrumentation signal wire for 4-20 m ADC current loops shall be no. 18 AWG minimum 2-conductor shielded, Belden 8760, or approved equal.
2. All wiring shall be neatly bundled and secured in place after installation.

E. Mounting Hardware
1. Contractor shall install all hardware as required to support panels, junction boxes, enclosures, receptacles, conduit, and cable tray. This hardware shall include one-hole straps, U-bolts, galvanized unistrut, unistrut pipe straps, bolts, nuts, washers, etc.

F. Miscellaneous
1. Wire pulling lubricant shall be used when required to aid pulling of wire and cable. Approved lubricants are Burndy "Slikon" and Ideal "Wire Lube" or "Yellow 77".

2.4 LABELING

A. Wire Color Code
1. Color code for 120 VAC control conductors shall be as follows:
   120 VAC control - Yellow
   120 VAC hot - Black
   120 VAC neutral - White
   Ground - Green
2. Color code for instrumentation conductors consisting of 2-conductor shielded cable for 4-20 mADC analog signals shall be as follows:
   Positive 24 VDC - Black
   Negative 24 VDC - White
3. Color code for 24 VDC power conductors shall be as follows:
   Positive 24 VDC - Red
   Negative 24 VDC - White
4. Color code for thermocouple extension wire shall be as follow:
   Type K:Positive - Yellow
   Negative - Red
   Type R:Positive - Black
   Negative - Red
   Type J:Positive - White
   Negative - Red

B. Labels
1. All metal enclosed instrumentation devices shall be clearly identified with engraved plastic or stainless steel nameplates securely attached to each enclosure with stainless steel screws.

2. Wire markers shall be Raychem heat shrink or sleeve type, or approved equal.

C. Valve Tagging

1. The following information shall be supplied permanently attached (pinned) and visible when the valve is in service and fully insulated:
   a. Manufacturer's name
   b. Manufacturer's serial number
   c. Maximum body pressure rating
   d. Body material
   e. Bench setting for spring operating range
   f. Trim material and size
   g. Valve action and diaphragm operating pressure range.

D. Instrument Loop Numbering

1. All instruments shall be assigned instrument numbers supplied by IT. These numbers shall be used to identify all instrumentation on specifications, flowsheets, correspondence, location drawings, piping drawings, and electrical drawings.

PART 3 EXECUTION

3.1 GENERAL

A. Installation

1. Instrumentation shall be installed in such a manner as to minimize the detrimental effects of dust, precipitation, sunlight, humidity, and temperature extremes on instrumentation equipment, components, and fittings.
2. Instrumentation shall be installed in such locations and in such a manner as to provide accessibility for adjustments, calibration, replacements, service and repairs, and to reduce chances that equipment may be exposed to damage or excessive heat.

B. Workmanship

1. Contractor shall perform the instrumentation installation with certified instrument technicians skilled in the crafts involved and using proper tools for the work. The work shall be performed in a manner acceptable to IT.

C. Exceptions

1. Contractor shall inform IT of any exceptions taken to these specifications or to referenced codes, standards, or IT drawings. Any exceptions taken to this specification shall be specifically noted in writing.

D. Design Discrepancies
In the event of discrepancies among design documents, the Contractor shall inform IT in writing for a clarification or resolution.

3.2 INSTALLATION REQUIREMENTS

A. Positioners
1. Positioners and their accessories shall be bolted to the actuator top works and tubing connections completed. The tubing and fittings shall be 316 SS. Pneumatic operated positioners shall have an instrument air loading gauge and necessary positioner output gages. Positioners that require supply air regulation shall be furnished complete with filter, pressure regulator (50 to 100 psig inlet pressure) and regulated air pressure gage.

B. Control Valves
1. Control valves shall be installed so that they are readily accessible from grade or platforms. Whenever possible control valves shall be installed with stems oriented vertically above the body.

C. Field Mounting
1. Brackets and posts for instrument mounting shall be designed and located to provide at least 2 feet area access for maintenance from walkways. Instruments shall be mounted in the orientation required by the manufacturer and in compliance with API RP 550 latest edition. Field instruments shall not be mounted on handrails, process equipment or piping.

D. Tubing
1. Tubing shall be stainless steel for single runs and for bundles. Connections shall be made with stainless steel compression fittings as manufactured by Swagelok or approved equal.
2. Instrument air supply tubing shall be 3/8" OD with .035" wall thickness, 316 SS seamless tubing.
3. Close coupled instrument air transmission signals between pneumatic transmitter and controllers shall be 1/4" OD with .035" wall thickness, 316 SS seamless tubing.
4. Instrument air tubing fittings shall be 316 SS compression type, Swagelok or approved equal.
5. Tubing runs shall be installed in raceway or supported in channel. Supporting channel shall be connected to skid structural supports. Equipment and piping systems shall not be used for channel or tubing supports. Plastic, nylon, or other tie wraps shall not be used to support or fasten tubing.

6. Tubing shall be sloped towards the process taps for pressure instruments. The minimum slope is 1/8" to 1/4" per foot. This is intended to eliminate measurement errors due to condensation buildup.

E. Process Connections

1. Process tubing shall be ½" OD with .035" wall thickness, 316 SS seamless tubing. Process tubing fittings shall be 316 SS compression type, Swagelok, or approved equal.

3.3 FIELD QUALITY ASSURANCE

A. Calibration

1. Standard calibration and alignment of all instruments shall be performed by the Contractor after installation on skid. Calibration and alignment will be rechecked after the equipment is installed in the field. Calibration reports shall be included in equipment documentation by Contractor.

3.4 INSPECTION AND TESTING

A. General Requirements

1. Testing of the skid and/or field instrumentation installation by Contractor shall be conducted to determine that instruments, materials, devices, equipment, wiring, and installation meet requirements as outlined in these specifications and per the instrumentation drawings.
2. Testing shall ensure that the instrumentation installation is wired per the instrumentation wiring diagrams and according to applicable codes and customary practices.
3. The following instrumentation equipment, components, and materials shall be tested or inspected as required:
   a. Wire terminations to Control Panels and Remote Terminal Units (RTUs)
   b. Wire terminations to junction boxes
   c. Labels.
4. IT shall have access to inspect the instrumentation work in progress. Contractor shall perform instrumentation installation work in such a manner as to provide accessibility of work in progress.
5. Contractor shall furnish all labor, materials, supplies, and test instruments for conducting tests.
6. IT shall be notified a minimum of 10 days in advance that the instrumentation installation is complete and that the instrumentation system is ready for testing.
7. Contractor shall furnish qualified individuals to perform the test and troubleshoot any problems that may arise.

8. Testing by Contractor shall be performed in the presence of IT Corporation personnel or IT Corporation's representative.
9. Where tests indicate defective materials, installation or wiring, Contractor shall promptly correct the problem.

B. Operational Testing

1. Contractor shall check all terminations for loose connections and ensure that contacts and working parts are correctly aligned and free from dust and foreign matter. This shall be done before any operational tests are performed.
2. Contractor shall provide AC or DC instrumentation power as required and shall perform operational tests of the instrumentation system. Control circuits shall be checked for proper sequencing and operation by use of push buttons and selector switches.
3. Ensure that all legend plates are securely fastened and that inscription agrees with the drawings. Remove incorrect nameplates and replace with correct nameplates.
4. Ensure that all cables and wires are identified with wire markers at each end with identifying numbers as called for on the drawings and on the conduit and cable schedule.
5. Ensure that all instruments, alarm equipment, and motor control circuits are functional.
6. Ensure that all instruments are adequately supported.

-End of Section-

Portable Structures

DRAFT

Waste Pits Remedial Action Project (WPRAP) Utility Plans for Portable Structures

***

PREPARED
for
Fluor Daniel Fernald, Inc.
Fernald, Ohio

FDF Subcontract No. 98SC000001

***

PREPARED
by
IT Corporation
2790 Mosside Boulevard
Monroeville, PA 15146-2790

IT Project No. 773481

***

Revision B
Issue Date: February 13, 1998

Drawing List

Drawing No.	Rev. No.	Description
M-70-02-001	B	Site Utilities Plan
B-70-02-002	B	Administrative Area Utility Plan

DRAWING NUMBER 773481-M29

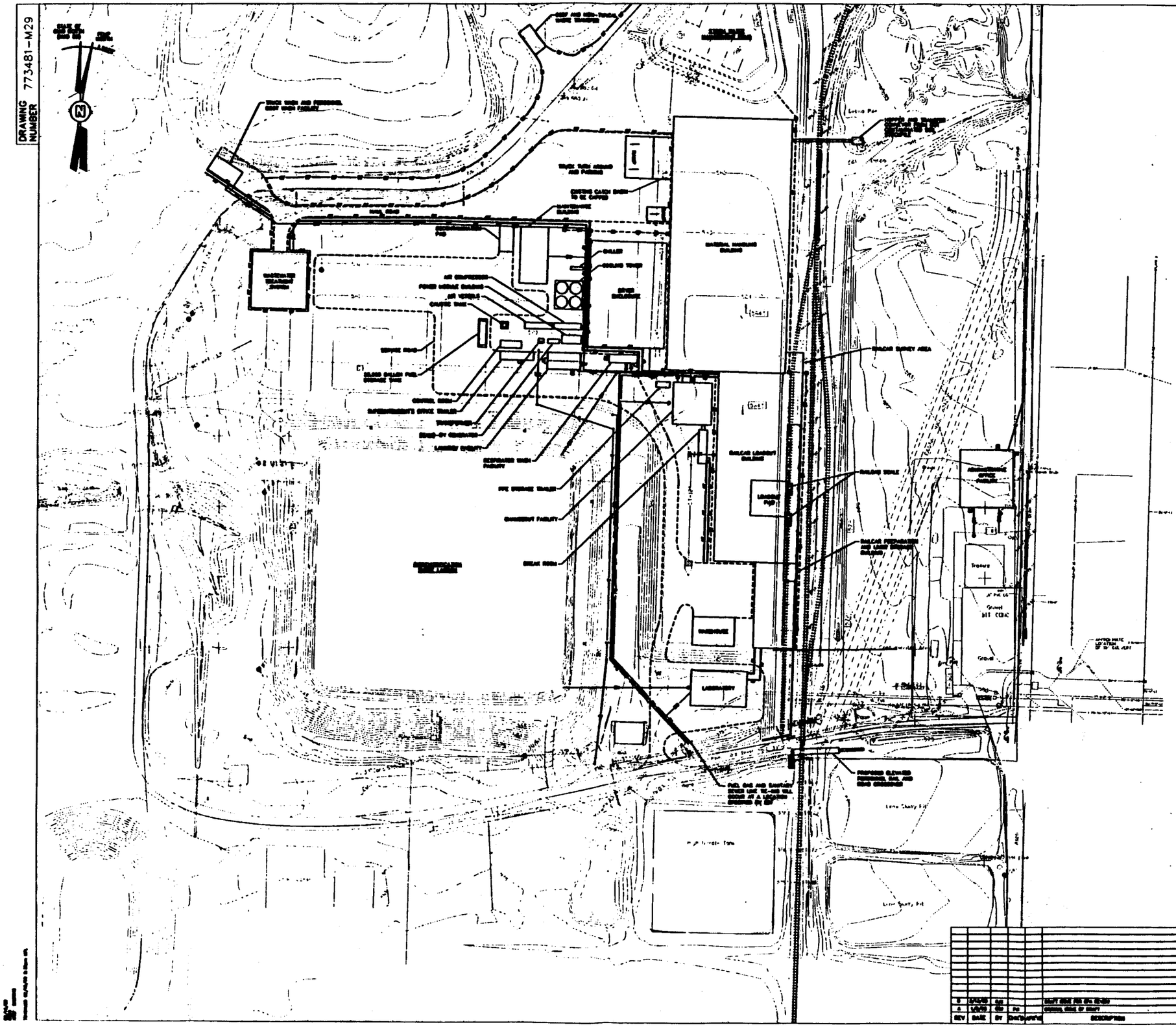

FIGURE 5-1

FLUOR DANIEL FERNALD

WASTE PITS REMEDIAL ACTION PROJECT (WPRAP)

PROJECT NAME: WASTE PITS REMEDIAL ACTION PROJECT (WPRAP)

TITLE: SITE UTILITIES PLAN

INTERNATIONAL TECHNOLOGY CORPORATION

... Creating a Safer Tomorrow

DESIGNED BY	RJ	CHECKED BY	RJ	1/4/93	REVISION
DRAWN BY	S. A. HAPP	APPROVED BY			
DATE	10 DECEMBER 92	DWG. SCALE	1"=50'		8
F PROJECT NO	773481	DRAWING NO.	M-70-02-005		

REV	DATE	BY	CHKD	APP'D	DESCRIPTION
B	12/4/92	SAH			DRAFT ISSUE FOR 30% REVIEW
A	1/6/93	SAH	RJ		GENERAL ISSUE OF DRAFT

DRAWING NUMBER 773481-B10

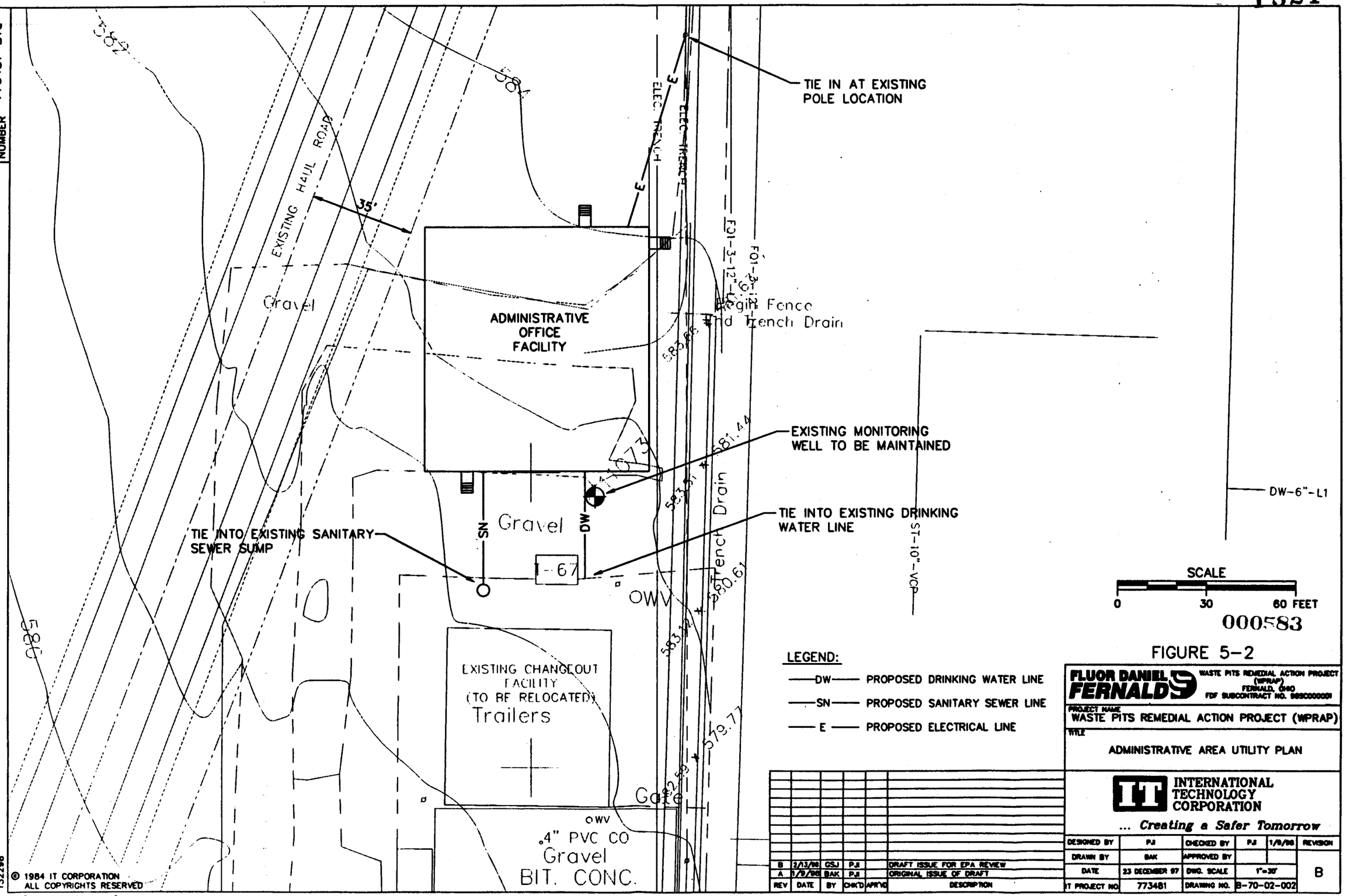

000583

FIGURE 5-2

773481B10 02/10/98 3:48am MFL

132298

5 FEB 98
0900

DRAFT

Waste Pits Remedial Action Project (WPRAP) Point Source Emissions Data

***

PREPARED
for
Fluor Daniel Fernald, Inc.
Fernald, Ohio

FDF Subcontract No. 98SC000001

***

PREPARED
by
IT Corporation
2790 Mosside Boulevard
Monroeville, PA 15146-2790

IT Project No. 773481

***

Revision B
Issue Date: February 13, 1998

Record of Issue/Revisions

Date	Rev. No.	Description of Issue/Revision
1-9-98	A	Original Issue of Draft
2-13-98	B	Draft Issue for EPA Review

Table of Contents

Record of Issue/Revisions i
List of Tables iii
1.0 Introduction 1
1.1 Point Source Stack Emissions Estimates 2
1.1.1 Dryer Off-Gas 2
1.1.2 Furnace Off-Gas 5
1.1.3 Cooling Tower 6
1.1.4 Laundry Facility 6
1.1.5 Respirator Wash Facility 7
1.1.6 On-site Laboratory 7
2.0 Fugitive Emissions 9
2.1 Radon 9
2.2 Combustion Pollutants 9

List of Tables

Table Number	Title
1-1	Waste Feed Blend Scheme for Each OU1 Operation Phase
1-2	Emissions Data for Semi-Volatile Organics
1-3	Emissions Data for Volatile Organic Compounds (VOCs)
1-4	Emissions Data for Regulated Toxic Metals
1-5	Radon Content of Stack Gases from OU1 Blend Batches
1-6	Emissions Estimate for Furnace Stack
1-7	Emissions Estimate from Laundry Facility
1-8	Emission Estimate from Onsite Laboratory
2-1	Emissions Estimate for Railcar Loadout and Waste Preparation Building Equipment

1.0 Introduction

The Operable Unit 1 remediation system will include a thermal dryer unit and its associated air pollution control system. The dryer will be designed as an indirect heat transfer unit, and will be used to thermally remove moisture from the waste feed stream. The incoming waste feed will be blended using materials from the six OU1 waste pits (Waste Pits 1-6), the Burn Pit and the Clearwell. Each of these waste pits contain contaminated soils, sludges and liquids. These waste pits will be mechanically excavated, and the waste materials will be transferred to a waste processing area. The waste received from the waste pits will either be blended and sent directly to the railcar loadout building, or will be blended and fed to the dryer. The dryer will remove moisture from the waste feed and discharge it as part of the dryer exhaust gas stream.

The materials which become entrained in the dryer off-gas will come directly from the blended waste feed materials and any resulting decomposition or reaction inside the dryer. The amount of pollutants in the dryer off-gas will depend on the proposed blend scheme, and the contribution from each waste pit to the total mass of pollutant in the waste feed stream

In addition to the dryer off-gas, airborne pollutants will be emitted from the dryer furnace, onsite laboratory, onsite laundry facility, and from activities in the material handling building and the railcar loadout building. The furnace off-gas will contain products of combustion of natural gas and fuel oil. The furnace off-gas emissions will be exhausted to the atmosphere via a dedicated stack.

Air pollutant emissions were estimated for each pollution source mentioned above. The emissions were estimated by using CIS and RI/FS waste pit composition data. These data sets indicated the average, minimum and maximum pollutant concentrations in the wastes. These wastes included inorganic, organic (semivolatile and volatile), metal and radionuclide materials. For each pollutant its corresponding emissions were calculated using the highest concentration data available from the RI/FS or CIS data sets.

These estimated emissions will be used by FDF to perform air dispersion modeling calculations.

The air dispersion modeling results will be used to determine the fenceline exposure quantities and the emission point source limits from the selected operations. Based on these limits, the final gas stream treatment system will be evaluated and modified as appropriate.

1.1 Point Source Stack Emissions Estimates

1.1.1 Dryer Off-Gas

As part of the design of the OU1 drying process, the dryer off-gas will require treatment before being discharged to the atmosphere. As such, the dryer off-gas will be treated in the gas cleaning system (GCS) where entrained pollutants in the off-gas will be captured and removed. Dryer off-gas emissions estimates for the speciated data available from the RI/FS and CIS data sets have been developed along with an emission estimate for non-speciated organic compounds.

Speciated Emissions Estimates. The speciated emissions estimate considers only the regulated compounds for which speciated data was available from the RI/FS or CIS. Using these data, the dryer off-gas pollutant composition will vary for each operation phase due to the altering of the waste feed blend. There are 19 proposed operation phases, with each phase having a unique waste blending scheme. Table 1-1 indicates the blend scheme for each phase, and the mass contribution from each waste pit. In addition to the indicated waste blend amounts, material from the OU1 Contaminated Soil Stockpile will be used as supplemental bulk material to assist in meeting the waste feed composition criteria.

For each pollutant its corresponding emissions were calculated using the highest concentration data available from the RI/FS or CIS data sets. It was conservatively assumed that the complete amount of each pollutant was released to the dryer off-gas for each blend scheme and operation phase. This assumption resulted in the worst case air pollution emissions for each operation phase.

The dryer off-gas pollutants will be controlled using several air pollution control devices. These GCS devices are designed to collect and remove certain pollutants from the gas stream (i.e. VOCs, particulate, etc.). The attached tables (Tables 1-2 through 1-4) indicate the concentration of each detected pollutant in each waste pit, and the estimated emissions from the dryer off-gas,

both prior to the GCS system (uncontrolled) and after the GCS system (controlled).
The control efficiency of each GCS device varies according to the pollutant present in the gas stream. Additionally, the assumed particulate carryover (as a percentage of the waste feed) will vary with the waste feed rates. The table below details the estimated design control efficiency for each GCS device for the corresponding pollutant at the maximum design hourly feed rate.

GCS Device	Control Efficiency for:		
	Organics (semi-volatile)	Volatile Organic Compounds (VOCs)	Particulate
Cyclone	0%	0%	62.5%
Quench	5%	10%	10%
Venturi Scrubber	5%	10%	97%
Contact Scrubber	87.5%	10%	35%
Wet Electrostatic Precipitator (WESP)	1%	0%	99.9%
HEPA Filter	0%	0%	99.9%
Carbon Adsorber	97.5%	97%	30%

It should be noted that, although the quench is primarily being used to cool the gas stream prior to introduction to the subsequent control devices, the moisture condensation action and cooling will remove a small portion of pollutants.

Radon that is emitted from the dryer has been assumed to be fully emitted with no removal effects from the GCS devices. Emissions of Radon-222 from the dryer unit have been estimated using the final RI/FS data for radium in the waste pit feed, the proposed blending schemes, the maximum dryer feed rate, and the design exhaust gas flow rate from the exhaust stack. Radon-220 was not accounted for in these estimates due to its short half-life of 54 seconds. By the time Radon-220 passes through the gas handling system and diffused to an external receptor point, the remaining amount should be negligible. The maximum radon emission rates and concentrations in the dryer exhaust gas stream are shown in Table 1-5.

Non-Speciated Emission Estimate. The non-speciated emissions estimate is based on the non-speciated total organic carbon (TOC) values given in the RI/FS. The TOC values represent all organic compounds as a whole including the speciated organic compounds.

The RI/FS contained data which indicated that the pit material is made up of approximately 12 percent total organic carbon (TOC). This amount of organic carbon is many times higher than can be accounted for by the combined total quantity of regulated compounds. This is always the case, since TOC includes non-regulated compounds such as; oil and grease, kerosene, and other petroleum derivatives; wood chips, sawdust and other related plant materials; polyester, polypropylene and other plastics, and potentially graphite and fixed carbon. These materials typically do not impact regulatory emission limits or health risk assessments. However, they significantly impact the design of the dryer and gas cleaning system. As such, the data shown in the PFD D-50-10-001 include the mass flow of these non-regulated forms of organic carbon.

The calculations for non-speciated emissions are based on a weighted average, aggregate TOC concentration in the pit wastes, which was estimated to be 12% of the waste pit mass (12% TOC fraction). As the waste material is processed through the dryer for the purpose of moisture removal, it will be exposed to various temperatures during the residence time inside the unit. Based on the thermodynamics of the dryer system (including radiant, convective and conductive heat transfer), it was assumed that the waste material will be exposed to higher temperatures at the dryer shell wall than inside the core of the waste material mass. The bulk (core) temperature of the material was assumed to be much lower, and a temperature gradient was estimated across the mass of material inside the dryer.

The amount of organics released to the off-gas was estimated based on the exposure of material to these various temperatures. The organic composition of the off-gas was calculated to be approximately 35% of the TOC inside the dryer. TOC in the off-gas is composed of volatile organic compounds (VOCs) and semi-volatile organic compounds. The semi-volatile compounds are condensible and are removed by the wet scrubbing equipment. The majority of the VOCs pass through the wet scrubber and are removed by the carbon bed/thermal oxidizer. The VOC fraction was assumed based on the vapor pressure of kerosene. Kerosene was selected

as a surrogate to represent TOC for the following reasons:

- It exhibits a mid range volatility. Compounds more volatile than kerosene would have evolved from the pits. Compounds with much lower volatility would be included in the oil and grease results in the RI, which account for roughly 5% of the TOC.

- The raffinate discarded in the pits includes residue from the Purex process. The Purex process involved extraction of uranium with 30% tributyl phosphate in kerosene. Therefore, it is known that kerosene was discarded into the waste pits.

- The RI indicates that relatively high concentrations of anthracene, benzo(a)anthracene, fluoranthene and other similar compounds exist in the waste pits. All of these compounds are constituents in kerosene. Kerosene is thought to be the most likely source of these compounds present in the waste pits.

The non-speciated emissions estimate uses the same removal efficiencies as the speciated emissions estimate across identical unit operations throughout the gas cleaning system. The non-speciated organic emission estimate from the PFD is 3.23 lb/hr.

To compare the values for speciated and non-speciated emission estimates, the average speciated organic emissions from Tables 1-2 and 1-3 have been summed to be 0.013 lb/hr using the RI/FS pit concentration data and a design feed rate of 23 tons per hour to the dryer. The difference of 3.22 lb/hr represents the unspeciated VOCs that are anticipated based on TOC values in the RI.

1.1.2 Furnace Off-Gas

The dryer will be indirectly heated using energy from the combustion of natural gas and fuel oil. The combustion of these fuels will generate pollutants in the form of products of incomplete combustion including:

- carbon monoxide (CO),

- oxides of nitrogen (NOx as NO2),
- sulfur dioxide (SO2),
- particulate matter (as PM-10),
- volatile organic compounds.

Trace amounts of the following hazardous air pollutants will also be emitted in the furnace off-gas emissions:

- formaldehyde,
- mercury,
- arsenic,
- beryllium,
- cadmium,
- chromium,
- lead,
- manganese,
- mercury,
- nickel,
- polycyclic aromatic hydrocarbons.

These emissions were estimated using USEPA document AP-42 guidance for external combustion of natural gas and fuel oils. Additionally, a 30 percent reduction in NOx emissions was calculated due to the low-NOx burners which have been incorporated as part of the dryer design in accordance with Ohio EPA guidance for best available technology (BAT). The emission estimates from the furnace stack are shown in Table 1-6.

1.1.3 Cooling Tower

The GCS system cooling tower will emit water vapor and water droplets (from evaporation and drift, respectively). Any particulate matter emissions will be a result of the total dissolved solids in the windage (drift) losses from the cooling tower exhaust. However, the particulate will be entrained in large water droplets that will tend to settle to ground before evaporation. Therefore, particulate emissions as airborne PM-10 will be negligible.

1.1.4 Laundry Facility

The on-site laundry facility will be used to wash and dry worker clothing. The emissions from the laundry facility are estimated based on the use of wet wash machines and five commercial gas dryers. Exhaust from each dryer will be ducted to a common exhaust header, filtered through a lint filter and then through a HEPA filter prior to discharge to the atmosphere.

Airborne emissions from the laundry facility will be discharged from the dryer exhaust system. Contaminants that are not removed in the wet wash cycle are carried over to the dryer cycle. These pollutants were then conservatively assumed to be discharged from the heated dryers. The estimated emissions of the remaining pollutants, after the wash cycle, are shown in Table 1-7.

1.1.5 Respirator Wash Facility

Emissions from the onsite respirator wash facility are estimated based on the use of an automatic wet wash machine and two electrically heated dryer machines. Respirators will be washed through multiple cycles in the wash machine. Any contaminant residues on the respirators will be removed in the wash water stream. The respirators will then be transferred to the dryers for final drying before being placed back in service. The dryers are vented to the outside atmosphere.

There will be no airborne emissions from the respirator wash facility. Any contaminants present on the "dirty" respirators will be removed in the wash cycles, and carried out in the liquid stream to the grey water tank. Also, without knowing the chemical affinity of the respirator materials to possible contaminants present in the field, it must be assumed that any contaminant residues are fully removed in the wash cycles.

1.1.6 On-site Laboratory

Emissions from the on-site laboratory can result from several sources. These sources can include the samples themselves, the use of reagents or the combustion of fuels. The analyses of the samples will be performed on both pre-treated and treated materials. These materials can consist of solids (soils), liquids (water effluents) and gases (ventilation). The method of analyses for each of these material streams is detailed in the project sampling and analysis plans and procedures.

Emissions from the laboratory operations have been estimated based on the type of analysis required for the materials. Only those analyses that have the capability of producing airborne pollutant emissions were considered. These included the moisture and density analyses, wherein the samples must be heated to remove moisture. It was assumed that during the heating process, any organics present in the samples would evolve and be released to the ventilation system. However, the toxic metals were assumed to remain in the samples due to the relatively low temperatures to which the samples would be subjected during the moisture removal procedures.

Because of the nature of the sample locations, emissions were estimated in two different manners. For those samples collected at the newly exposed pit excavations, as well as the Material Handling Building, the emissions were estimated based on the release of all pollutants to the atmosphere using the maximum specific pollutant concentrations. This estimate is highly conservative, and the actual emissions are projected to be significantly lower because the various organics will evolve at a wide range of temperatures, with the heavier organics requiring temperatures above that required to remove moisture.

For those sample taken from the blend area, the blend schemes must be taken into account to accurately estimate the total mass fraction contributed from each waste pit. The total pollutant mass contribution was calculated against the total blend mass, which resulted in an overall concentration for each pollutant for each phase. The sample was then assumed to be a homogenous blend with the same concentrations. Using this blend concentration, the total mass of each pollutant available for release during the analytical procedures was estimated to be released from the samples. For ease of calculation, each sample was conservatively assumed to be one kilogram in mass. The total emissions estimated for the pollutants for each phase are shown in Table 1-8.

2.0 Fugitive Emissions

Radon and heavy equipment diesel engine emissions will be present in the railcar loadout and waste preparation buildings. Estimated emissions of these pollutants are shown in Table 2-1. These pollutants will be fugitive emissions due to the open air design of the buildings.

2.1 Radon

Radon is continuously generated from the decay of radium present in the waste feed materials, as well as the treated materials. Radon will diffuse from the waste storage and blend piles in the waste preparation and loadout buildings. The estimated radon concentrations (as Radon-222) in the building will vary according to operation phase. The fugitive radon emissions (in conjunction with the dryer exhaust stack radon emissions) will be used to estimate fenceline exposure levels and to ensure that these levels are not exceeded. Fugitive radon emissions were conservatively estimated using the highest Radium concentration data (Operation Phase 2), and assuming the following:

- the radon in the railcar loadout building can escape into the building before substantial decay;
- because of the wet conditions of the dryer feed material, only 10% of the radon in the blending area can escape;
- the inventory for drying and blending is 11,400 tons;
- the loadout area inventory is 3,600 tons;
- total waste material present is 15,000 tons.

2.2 Combustion Pollutants

The remaining pollutants will originate from the diesel engines required to operate the material handling machines (i.e. front loaders, trackhoes, etc.). The emissions have been estimated based on vendor supplied data (Caterpillar 938, 162 hp diesel engines). These emissions have been assumed to be uncontrolled, and the engine operating at full horsepower capacity. These emissions, along with the radon emissions, will be used to estimate pollutant concentrations in the buildings so that work practices can be implemented to ensure pollutant concentrations will not exceed their respective OSHA PELs.

TABLES

Table 1-1
Waste Feed Blend Scheme for Each OU1 Operation Phase

Operation Phase	Pit Contribution to Phase							
	Pit 1 (tons)	Pit 2 (tons)	Pit 3 (tons)	Pit 4 (tons)	Pit 5 (tons)	Pit 6 (tons)	Burn Pit (tons)	Clearwell (tons)
1			2,469					
2	72,453	5,390	51,026					
3			23,538					
4	18,207		24,196					
5		19,256	24,690	40,150				
6			8,065					
7		7,766	11,193	753				
8			12,180			16,222		
9			43,145		5,200			
10					3,350			
11					700	6,040		
12				4,768	2,100		37,961	
13					500		4,314	
14				47,657	2,900			
15					50			
16				12,943	1,550			
17					2,869			
18				1,757	31,926			3,791
19				125				6,040

Table 1-2
Emissions Data for Semi-Volatile Organics

Organics	Controlled Dryer Exhaust Emissions from Exhaust Stack (lb/hr) Per Phase																				
	I			II			III			IV			V			VI			VII		
Pollutant	avg	min	max	avg	min	max	avg	min	max	avg	min	max	avg	min	max	avg	min	max	avg	min	max
4,4-DDT	-	-	-	-	-	-	-	-	-	-	-	-	-	-	-	-	-	-	-	-	-
Aroclor-1221	-	-	-	1.30e-04	9.42e-06	5.65e-04	-	-	-	9.91e-05	7.20e-06	4.32e-04	-	-	-	-	-	-	-	-	-
Aroclor-1242	-	-	-	-	-	-	-	-	-	-	-	-	3.12e-05	1.86e-05	8.27e-05	-	-	-	2.50e-06	1.49e-06	6.62e-06
Aroclor-1248	1.20e-04	9.73e-06	4.67e-04	4.38e-04	2.20e-05	1.29e-03	1.19e-04	9.65e-06	4.63e-04	3.78e-04	1.43e-05	1.18e-03	4.12e-04	7.96e-05	1.02e-03	1.34e-04	9.95e-06	4.78e-04	2.84e-04	1.15e-04	8.28e-04
Aroclor-1254	1.00e-04	9.54e-06	3.31e-04	5.30e-04	3.01e-05	1.45e-03	9.93e-05	9.46e-06	3.28e-04	4.51e-04	2.74e-05	1.26e-03	2.35e-04	6.64e-05	7.11e-04	1.11e-04	9.75e-06	3.38e-04	1.13e-04	1.43e-05	3.67e-04
Aroclor-1260	-	-	-	-	-	-	-	-	-	-	-	-	-	-	-	-	-	-	-	-	-
2,4,5-Trichlorophenol	-	-	-	-	-	-	-	-	-	-	-	-	-	-	-	-	-	-	-	-	-
2,4-Dichlorophenol	-	-	-	-	-	-	-	-	-	-	-	-	2.95e-05	1.84e-05	1.84e-04	-	-	-	2.36e-06	1.47e-06	1.47e-05
2,4-Dinitrophenol	-	-	-	-	-	-	-	-	-	-	-	-	1.41e-04	3.76e-06	8.80e-04	-	-	-	1.13e-05	3.01e-07	7.04e-05
2,6-Dinitrotoluene	3.75e-05	4.18e-05	9.73e-05	2.55e-05	2.85e-05	6.64e-05	3.71e-05	4.15e-05	9.65e-05	3.68e-05	4.11e-05	9.56e-05	1.89e-05	2.12e-05	4.92e-05	4.17e-05	4.28e-05	9.95e-05	3.66e-05	4.09e-05	9.52e-05
2-Chlorophenol	-	-	-	6.20e-06	1.54e-06	2.03e-05	-	-	-	-	-	-	3.39e-05	8.44e-06	1.11e-04	-	-	-	5.84e-05	1.74e-05	1.91e-04
2-Methylnaphthalene	-	-	-	4.09e-05	1.40e-05	1.39e-04	-	-	-	1.64e-05	7.20e-06	6.48e-05	1.47e-04	5.85e-05	3.87e-04	-	-	-	1.86e-04	5.42e-05	5.22e-04
3-Methylphenol	-	-	-	2.20e-05	3.96e-06	8.48e-05	-	-	-	1.68e-05	3.02e-06	6.48e-05	1.59e-05	7.68e-06	3.76e-05	-	-	-	1.27e-06	6.15e-07	3.01e-06
3,3-Dichlorobenzidine	-	-	-	-	-	-	-	-	-	-	-	-	-	-	-	-	-	-	-	-	-
4-Chloro-3-methylphenol	-	-	-	6.21e-06	1.61e-06	2.03e-05	-	-	-	-	-	-	6.24e-05	1.32e-05	2.95e-04	-	-	-	6.08e-05	1.86e-05	2.06e-04
4-Methylphenol	-	-	-	6.27e-06	1.33e-06	2.03e-05	-	-	-	-	-	-	5.44e-05	3.61e-05	1.49e-04	-	-	-	6.07e-05	1.74e-05	1.94e-04
4-Nitroaniline	-	-	-	-	-	-	-	-	-	-	-	-	-	-	-	-	-	-	-	-	-
4-Nitrophenol	-	-	-	2.90e-05	1.33e-06	9.81e-05	-	-	-	-	-	-	1.59e-04	7.29e-06	5.37e-04	-	-	-	2.73e-04	1.51e-05	9.24e-04
Acenaphthene	-	-	-	6.28e-05	5.61e-07	3.01e-04	-	-	-	-	-	-	4.00e-04	1.00e-05	1.80e-03	-	-	-	5.96e-04	6.90e-06	2.85e-03
Acenaphthylene	3.46e-05	9.34e-06	9.73e-05	2.98e-05	7.14e-06	8.67e-05	3.43e-05	9.26e-06	9.65e-05	3.40e-05	9.18e-06	9.56e-05	5.14e-05	8.94e-06	1.60e-04	3.85e-05	9.56e-06	9.95e-05	9.21e-05	1.79e-05	2.87e-04
Anthracene	2.62e-05	1.26e-05	9.73e-05	2.08e-04	1.60e-05	9.58e-04	2.60e-05	1.25e-05	9.65e-05	4.09e-05	1.78e-05	1.34e-04	1.05e-03	2.94e-05	4.92e-03	2.92e-05	1.29e-05	9.95e-05	1.64e-03	1.86e-05	8.04e-03
Benzo(a)anthracene	3.91e-05	3.50e-05	9.73e-05	2.33e-04	3.22e-05	1.03e-03	3.88e-05	3.47e-05	9.65e-05	5.05e-05	4.05e-05	1.34e-04	1.15e-03	5.18e-05	5.41e-03	4.36e-05	3.58e-05	9.95e-05	1.84e-03	4.12e-05	8.71e-03
Benzo(a)pyrene	3.80e-05	2.72e-05	9.73e-05	2.23e-04	3.25e-05	9.58e-04	3.77e-05	2.70e-05	9.65e-05	5.33e-05	3.68e-05	1.34e-04	1.15e-03	4.36e-05	5.04e-03	4.23e-05	2.79e-05	9.95e-05	1.71e-03	3.74e-05	8.05e-03
Benzo(b)fluoranthene	4.19e-05	4.48e-05	9.73e-05	1.89e-04	3.71e-05	1.02e-03	4.16e-05	4.44e-05	9.65e-05	5.66e-05	4.79e-05	1.29e-04	9.57e-04	5.03e-05	5.50e-03	4.66e-05	4.58e-05	9.95e-05	1.37e-03	6.12e-05	8.71e-03
Benzo(g,h,I)perylene	3.63e-05	1.56e-05	9.73e-05	1.16e-04	1.52e-05	3.61e-04	3.60e-05	1.54e-05	9.65e-05	3.57e-05	1.53e-05	9.56e-05	5.54e-04	6.48e-05	1.84e-03	4.05e-05	1.59e-05	9.95e-05	8.96e-04	6.93e-05	2.88e-03
Benzo(k)fluoranthene	-	-	-	1.31e-04	1.45e-05	5.77e-04	-	-	-	1.59e-05	1.01e-05	3.89e-05	7.37e-04	3.33e-05	3.17e-03	-	-	-	1.04e-03	1.64e-05	4.98e-03
Benzoic Acid	1.26e-04	4.28e-06	4.77e-04	1.74e-04	1.32e-05	8.31e-04	1.25e-04	4.25e-06	4.73e-04	1.79e-04	1.05e-05	7.85e-04	2.10e-04	2.33e-05	1.09e-03	1.40e-04	4.38e-06	4.88e-04	2.79e-04	2.87e-05	1.35e-03
Chrysene	3.93e-05	3.60e-05	9.73e-05	2.05e-04	3.51e-05	8.18e-04	3.89e-05	3.57e-05	9.65e-05	5.98e-05	4.00e-05	1.34e-04	1.00e-03	4.87e-05	4.25e-03	4.37e-05	3.68e-05	9.95e-05	1.47e-03	8.72e-05	6.73e-03
DI-n-butyl phthalate	3.02e-05	9.05e-06	9.73e-05	4.54e-05	1.47e-05	1.62e-04	3.00e-05	8.97e-06	9.65e-05	4.67e-05	1.49e-05	1.60e-04	5.79e-05	2.03e-05	2.95e-04	3.36e-05	9.26e-06	9.95e-05	5.64e-05	1.74e-05	2.16e-04
Di-n-octyl phthalate	-	-	-	3.63e-05	1.75e-05	9.85e-05	-	-	-	2.28e-05	1.08e-05	5.97e-05	7.57e-05	2.96e-05	1.91e-04	-	-	-	6.41e-05	3.90e-05	1.98e-04
Dibenzo(a,h)anthracene	-	-	-	3.78e-05	4.56e-06	1.40e-04	-	-	-	-	-	-	2.28e-04	3.01e-05	8.12e-04	-	-	-	3.58e-04	5.19e-05	1.32e-03
Dibenzofuran	-	-	-	5.30e-05	5.47e-07	2.52e-04	-	-	-	-	-	-	3.47e-04	1.08e-05	1.52e-03	-	-	-	5.03e-04	6.81e-06	2.39e-03
Diethyl phthalate	1.26e-04	1.46e-05	4.18e-04	9.20e-05	1.07e-05	3.06e-04	1.25e-04	1.45e-05	4.15e-04	1.23e-04	1.43e-05	4.11e-04	1.26e-04	1.87e-05	5.07e-04	1.40e-04	1.49e-05	4.28e-04	1.85e-04	2.36e-05	6.15e-04
Fluoranthene	4.09e-05	1.17e-05	9.73e-05	7.75e-04	2.42e-05	3.59e-03	4.05e-05	1.16e-05	9.65e-05	6.50e-05	2.30e-05	1.68e-04	4.44e-03	2.56e-05	2.03e-02	4.55e-05	1.19e-05	9.95e-05	6.81e-03	2.52e-05	3.26e-02
Fluorene	-	-	-	9.12e-05	1.05e-06	4.35e-04	-	-	-	-	-	-	6.00e-04	1.86e-05	2.65e-03	-	-	-	8.67e-04	1.29e-05	4.11e-03
Ideno(1,2,3-cd)pyrene	3.59e-05	1.26e-05	9.73e-05	9.24e-05	1.10e-05	3.89e-04	3.56e-05	1.25e-05	9.65e-05	3.53e-05	1.24e-05	9.56e-05	4.30e-04	5.14e-05	2.00e-03	4.00e-05	1.29e-05	9.95e-05	6.78e-04	4.19e-05	3.15e-03
Isophorone	3.30e-05	2.14e-05	9.15e-05	2.25e-05	1.46e-05	6.24e-05	3.27e-05	2.12e-05	9.07e-05	3.24e-05	2.10e-05	8.99e-05	1.67e-05	1.08e-05	4.62e-05	3.67e-05	2.19e-05	9.36e-05	3.23e-05	2.09e-05	8.94e-05
N-Nitrosodiphenylamine	-	-	-	6.25e-06	1.19e-06	2.03e-05	-	-	-	-	-	-	3.42e-05	6.52e-06	1.11e-04	-	-	-	5.89e-05	1.35e-05	1.91e-04
Naphthalene	-	-	-	4.85e-05	4.56e-06	1.61e-04	-	-	-	-	-	-	3.33e-04	2.99e-05	1.10e-03	-	-	-	4.62e-04	5.19e-05	1.54e-03
Pentachlorphenol	1.19e-04	6.13e-05	2.82e-04	1.06e-04	4.76e-05	2.91e-04	1.18e-04	6.08e-05	2.80e-04	1.17e-04	6.02e-05	2.77e-04	1.98e-04	6.28e-05	6.80e-04	1.32e-04	6.27e-05	2.89e-04	3.54e-04	1.26e-04	1.20e-03
Phenanthrene	3.83e-05	7.49e-06	9.73e-05	6.67e-04	1.49e-05	2.89e-03	3.80e-05	7.43e-06	9.65e-05	1.09e-04	1.43e-05	2.68e-04	3.47e-03	1.63e-05	1.55e-02	4.27e-05	7.66e-06	9.95e-05	5.23e-03	1.58e-05	2.46e-02
Phenol	-	-	-	3.22e-05	3.89e-05	1.05e-04	-	-	-	2.01e-05	2.88e-05	6.48e-05	5.18e-05	3.13e-05	1.49e-04	-	-	-	5.74e-05	1.55e-05	1.94e-04
Pyrene	3.93e-05	1.07e-05	9.73e-05	4.27e-04	4.56e-05	1.90e-03	3.90e-05	1.06e-05	9.65e-05	5.93e-05	3.93e-05	1.60e-04	2.19e-03	4.08e-05	1.04e-02	4.38e-05	1.09e-05	9.95e-05	3.56e-03	2.00e-05	1.67e-02
Tributyl phosphate	-	-	-	1.47e-03	3.12e-04	2.63e-03	-	-	-	1.00e-03	2.01e-04	1.80e-03	5.66e-03	4.10e-03	7.26e-03	-	-	-	1.86e-03	8.54e-04	3.04e-03
bis(2-Ethylhexyl) phthalate	3.93e-05	1.07e-05	1.07e-04	5.90e-05	1.74e-05	1.78e-04	3.90e-05	1.06e-05	1.06e-04	5.84e-05	1.48e-05	1.70e-04	1.10e-04	3.79e-05	3.81e-04	4.38e-05	1.09e-05	1.09e-04	1.02e-04	6.26e-05	3.13e-04

Table 1-2
Emissions Data for Semi-Volatile Organics

Organics	Controlled Dryer Exhaust Emissions from Exhaust Stack (lb/hr) Per Phase																				
	VIII			IX			X			XI			XII			XIII			XIV		
Polltuant	avg	min	max	avg	min	max	avg	min	max	avg	min	max	avg	min	max	avg	min	max	avg	min	max
4,4-DDT	-	-	-	-	-	-	-	-	-	-	-	-	-	-	-	-	-	-	-	-	-
Aroclor-1221	-	-	-	-	-	-	-	-	-	-	-	-	-	-	-	-	-	-	-	-	-
Aroclor-1242	-	-	-	-	-	-	-	-	-	-	-	-	2.74e-05	4.22e-06	9.51e-05	2.16e-05	7.51e-08	8.11e-05	6.17e-05	3.68e-05	1.63e-04
Aroclor-1248	8.90e-05	7.19e-06	3.45e-04	1.97e-04	2.09e-05	7.74e-04	1.23e-05	5.93e-06	5.57e-05	1.19e-05	5.74e-06	5.40e-05	8.45e-05	8.19e-06	2.35e-04	3.28e-05	5.82e-06	1.35e-04	5.33e-04	5.21e-05	1.21e-03
Aroclor-1254	9.24e-05	1.48e-05	3.06e-04	1.75e-04	2.06e-05	6.20e-04	2.07e-05	5.93e-06	1.11e-04	4.90e-05	1.79e-05	2.04e-04	3.95e-04	1.97e-05	1.26e-03	3.85e-04	9.35e-06	1.26e-03	3.75e-04	1.25e-04	1.13e-03
Aroclor-1260	-	-	-	-	-	-	-	-	-	-	-	-	-	-	-	-	-	-	-	-	-
2,4,5-Trichlorophenol	-	-	-	-	-	-	-	-	-	-	-	-	-	-	-	-	-	-	-	-	-
2,4-Dichlorophenol	-	-	-	-	-	-	-	-	-	-	-	-	6.56e-06	4.10e-06	4.10e-05	-	-	-	5.82e-05	3.63e-05	3.63e-04
2,4-Dinitrophenol	-	-	-	-	-	-	-	-	-	-	-	-	3.14e-05	8.38e-07	1.96e-04	-	-	-	2.78e-04	7.42e-06	1.74e-03
2,6-Dinitrotoluene	2.77e-05	3.09e-05	7.19e-05	5.76e-05	6.43e-05	1.50e-04	-	-	-	-	-	-	-	-	-	-	-	-	-	-	-
2-Chlorophenol	-	-	-	-	-	-	-	-	-	-	-	-	-	-	-	-	-	-	-	-	-
2-Methylnaphthalene	-	-	-	-	-	-	-	-	-	-	-	-	6.04e-05	1.74e-05	1.52e-04	5.45e-05	1.05e-05	1.40e-04	7.91e-05	6.63e-05	1.74e-04
3-Methylphenol	-	-	-	-	-	-	-	-	-	-	-	-	3.53e-06	1.71e-06	8.38e-06	-	-	-	3.13e-05	1.52e-05	7.42e-05
3,3-Dichlorobenzidine	-	-	-	-	-	-	-	-	-	-	-	-	-	-	-	-	-	-	-	-	-
4-Chloro-3-methylphenol	-	-	-	-	-	-	-	-	-	-	-	-	6.34e-06	9.80e-07	4.10e-05	-	-	-	5.62e-05	8.69e-06	3.63e-04
4-Methylphenol	-	-	-	-	-	-	-	-	-	-	-	-	4.47e-06	6.42e-06	8.38e-06	-	-	-	3.96e-05	5.69e-05	7.42e-05
4-Nitroaniline	-	-	-	-	-	-	-	-	-	-	-	-	-	-	-	-	-	-	-	-	-
4-Nitrophenol	-	-	-	-	-	-	-	-	-	-	-	-	-	-	-	-	-	-	-	-	-
Acenaphthene	-	-	-	-	-	-	-	-	-	-	-	-	7.63e-05	6.54e-05	1.90e-04	6.76e-05	6.76e-05	1.65e-04	1.11e-04	1.37e-05	3.00e-04
Acenaphthylene	2.55e-05	6.90e-06	7.19e-05	5.31e-05	1.44e-05	1.50e-04	-	-	-	-	-	-	-	-	-	-	-	-	-	-	-
Anthracene	1.94e-05	9.34e-06	7.19e-05	4.03e-05	1.94e-05	1.50e-04	-	-	-	-	-	-	1.45e-04	6.85e-05	4.99e-04	1.28e-04	6.76e-05	4.66e-04	2.15e-04	4.11e-05	5.21e-04
Benzo(a)anthracene	2.89e-05	2.59e-05	7.19e-05	6.01e-05	5.38e-05	1.50e-04	-	-	-	-	-	-	2.22e-04	3.55e-05	9.78e-04	2.16e-04	3.00e-05	9.46e-04	1.63e-04	6.32e-05	7.42e-04
Benzo(a)pyrene	2.81e-05	2.01e-05	7.19e-05	5.84e-05	4.19e-05	1.50e-04	-	-	-	-	-	-	1.74e-04	3.98e-05	6.39e-04	1.45e-04	3.60e-05	5.86e-04	3.29e-04	5.05e-05	7.58e-04
Benzo(b)fluoranthene	3.10e-05	3.31e-05	7.19e-05	6.44e-05	6.88e-05	1.50e-04	-	-	-	-	-	-	3.43e-04	6.83e-05	1.47e-03	3.23e-04	6.76e-05	1.44e-03	3.35e-04	3.95e-05	9.16e-04
Benzo(g,h,I)perylene	2.68e-05	1.15e-05	7.19e-05	5.59e-05	2.39e-05	1.50e-04	-	-	-	-	-	-	1.15e-04	3.27e-05	4.52e-04	1.13e-04	2.70e-05	4.35e-04	7.42e-05	6.32e-05	3.63e-04
Benzo(k)fluoranthene	-	-	-	-	-	-	-	-	-	-	-	-	1.30e-04	5.41e-05	7.75e-04	1.06e-04	5.11e-05	7.51e-04	2.69e-04	5.21e-05	5.84e-04
Benzoic Acid	9.28e-05	3.16e-06	3.52e-04	1.93e-04	6.58e-06	7.33e-04	-	-	-	-	-	-	1.30e-05	2.14e-06	7.84e-05	-	-	-	1.15e-04	1.90e-05	6.95e-04
Chrysene	2.90e-05	2.66e-05	7.19e-05	6.04e-05	5.53e-05	1.50e-04	-	-	-	-	-	-	2.59e-04	3.10e-05	1.17e-03	2.37e-04	3.15e-05	1.16e-03	3.11e-04	1.11e-05	7.11e-04
DI-n-butyl phthalate	2.23e-05	6.68e-06	7.19e-05	5.25e-05	1.49e-05	1.84e-04	6.10e-06	1.01e-06	3.42e-05	5.91e-06	9.75e-07	3.31e-05	3.09e-05	1.05e-05	1.25e-04	2.91e-05	8.78e-06	1.07e-04	5.92e-05	2.42e-05	3.82e-04
Di-n-octyl phthalate	-	-	-	-	-	-	-	-	-	-	-	-	3.05e-05	1.20e-05	8.88e-05	2.27e-05	1.01e-05	7.51e-05	7.96e-05	2.21e-05	1.58e-04
Dibenzo(a,h)anthracene	-	-	-	-	-	-	-	-	-	-	-	-	4.58e-06	1.16e-06	9.98e-06	-	-	-	4.06e-05	1.03e-05	8.85e-05
Dibenzofuran	-	-	-	-	-	-	-	-	-	-	-	-	7.10e-05	6.56e-05	1.62e-04	6.16e-05	6.76e-05	1.40e-04	1.13e-04	1.55e-05	2.69e-04
Diethyl phthalate	9.28e-05	1.08e-05	3.09e-04	1.93e-04	2.24e-05	6.43e-04	-	-	-	-	-	-	1.06e-04	1.29e-05	7.50e-04	1.05e-04	1.20e-05	7.51e-04	5.57e-05	1.41e-05	3.63e-04
Fluoranthene	3.02e-05	8.62e-06	7.19e-05	6.28e-05	1.79e-05	1.50e-04	-	-	-	-	-	-	5.94e-04	4.70e-05	2.59e-03	5.10e-04	4.66e-05	2.40e-03	9.88e-04	2.69e-05	2.84e-03
Fluorene	-	-	-	-	-	-	-	-	-	-	-	-	9.84e-05	1.02e-05	3.02e-04	8.04e-05	7.81e-06	2.55e-04	1.99e-04	2.53e-05	5.37e-04
Ideno(1,2,3-cd)pyrene	2.65e-05	9.34e-06	7.19e-05	5.52e-05	1.94e-05	1.50e-04	-	-	-	-	-	-	9.50e-05	2.84e-05	3.53e-04	9.12e-05	2.25e-05	3.30e-04	7.84e-05	6.32e-05	3.63e-04
Isophorone	2.44e-05	1.58e-05	6.76e-05	5.07e-05	3.29e-05	1.41e-04	-	-	-	-	-	-	-	-	-	-	-	-	-	-	-
N-Nitrosodiphenylamine	-	-	-	-	-	-	-	-	-	-	-	-	-	-	-	-	-	-	-	-	-
Naphthalene	-	-	-	-	-	-	-	-	-	-	-	-	1.18e-04	2.95e-05	7.58e-04	1.09e-04	3.00e-05	7.51e-04	1.33e-04	9.79e-06	4.26e-04
Pentachlorphenol	8.78e-05	4.53e-05	2.08e-04	1.83e-04	9.42e-05	4.34e-04	-	-	-	-	-	-	1.96e-04	1.70e-04	3.69e-04	2.07e-04	1.80e-04	3.90e-04	-	-	-
Phenanthrene	2.83e-05	5.53e-06	7.19e-05	5.89e-05	1.15e-05	1.50e-04	-	-	-	-	-	-	5.54e-04	2.32e-05	2.41e-03	4.78e-04	2.25e-05	2.25e-03	9.04e-04	1.74e-05	2.53e-03
Phenol	-	-	-	6.80e-06	3.60e-06	3.42e-05	6.79e-06	3.60e-06	3.42e-05	6.57e-06	3.48e-06	3.31e-05	4.39e-05	2.11e-05	1.16e-04	4.54e-05	1.83e-05	1.31e-04	4.17e-05	5.09e-05	9.25e-05
Pyrene	2.91e-05	7.90e-06	7.19e-05	6.05e-05	1.65e-05	1.50e-04	-	-	-	-	-	-	4.55e-04	4.12e-05	2.15e-03	4.51e-04	3.60e-05	2.10e-03	2.58e-04	6.32e-05	1.42e-03
Tributyl phosphate	-	-	-	-	-	-	-	-	-	-	-	-	1.07e-03	8.55e-04	1.28e-03	-	-	-	9.48e-03	7.58e-03	1.14e-02
bis(2-Ethylhexyl) phthalate	7.91e-05	4.71e-05	1.66e-04	7.36e-05	1.80e-05	2.06e-04	1.31e-05	1.51e-06	4.13e-05	9.11e-05	6.30e-05	1.77e-04	3.15e-04	1.37e-05	1.44e-03	3.27e-04	1.35e-05	1.50e-03	1.17e-04	1.57e-05	4.49e-04

Table 1-2
Emissions Data for Semi-Volatile Organics

Organics	Controlled Dryer Exhaust Emissions from Exhaust Stack (lb/hr) Per Phase														
	XV			XVI			XVII			XVIII			XIX		
Pollutant	avg	min	max	avg	min	max	avg	min	max	avg	min	max	avg	min	max
4,4-DDT	-	-	-	-	-	-	-	-	-	-	-	-	-	-	-
Aroclor-1221	-	-	-	-	-	-	-	-	-	-	-	-	-	-	-
Aroclor-1242	-	-	-	5.84e-05	3.49e-05	1.55e-04	-	-	-	5.17e-06	3.88e-06	1.37e-05	2.17e-05	2.07e-05	5.77e-05
Aroclor-1248	1.07e-05	5.16e-06	4.85e-05	5.11e-04	5.23e-05	1.18e-03	1.22e-05	5.91e-06	5.55e-05	1.27e-04	5.41e-05	5.07e-04	4.24e-05	4.54e-05	7.97e-05
Aroclor-1254	1.80e-05	5.16e-06	9.69e-05	3.65e-04	1.21e-04	1.13e-03	2.06e-05	5.91e-06	1.11e-04	1.89e-04	5.54e-05	9.51e-04	7.35e-05	2.43e-05	1.44e-04
Aroclor-1260	-	-	-	-	-	-	-	-	-	-	-	-	-	-	-
2,4,5-Trichlorophenol	-	-	-	-	-	-	-	-	-	6.44e-05	5.76e-05	1.29e-04	6.24e-04	5.58e-04	1.25e-03
2,4-Dichlorophenol	-	-	-	5.51e-05	3.44e-05	3.44e-04	-	-	-	2.89e-06	1.81e-06	1.81e-05	1.25e-06	7.81e-07	7.81e-06
2,4-Dinitrophenol	-	-	-	2.64e-04	7.03e-06	1.65e-03	-	-	-	1.38e-05	3.69e-07	8.64e-05	5.98e-06	1.60e-07	3.74e-05
2,6-Dinitrotoluene	-	-	-	-	-	-	-	-	-	-	-	-	-	-	-
2-Chlorophenol	-	-	-	-	-	-	-	-	-	-	-	-	-	-	-
2-Methylnaphthalene	-	-	-	7.50e-05	6.29e-05	1.65e-04	-	-	-	3.94e-06	3.30e-06	8.64e-06	1.70e-06	1.43e-06	3.74e-06
3-Methylphenol	-	-	-	2.97e-05	1.44e-05	7.03e-05	-	-	-	1.56e-06	7.54e-07	3.69e-06	6.73e-07	3.26e-07	1.60e-06
3,3-Dichlorobenzidine	-	-	-	-	-	-	-	-	-	-	-	-	-	-	-
4-Chloro-3-methylphenol	-	-	-	5.32e-05	8.23e-06	3.44e-04	-	-	-	2.80e-06	4.32e-07	1.81e-05	1.21e-06	1.87e-07	7.81e-06
4-Methylphenol	-	-	-	3.76e-05	5.39e-05	7.03e-05	-	-	-	1.97e-06	2.83e-06	3.69e-06	8.53e-07	1.22e-06	1.60e-06
4-Nitroaniline	-	-	-	-	-	-	-	-	-	-	-	-	-	-	-
4-Nitrophenol	-	-	-	-	-	-	-	-	-	-	-	-	-	-	-
Acenaphthene	-	-	-	1.05e-04	1.30e-05	2.84e-04	-	-	-	5.50e-06	6.84e-07	1.49e-05	2.38e-06	2.96e-07	6.46e-06
Acenaphthylene	-	-	-	-	-	-	-	-	-	-	-	-	-	-	-
Anthracene	-	-	-	2.04e-04	3.89e-05	4.94e-04	-	-	-	1.95e-05	9.67e-06	4.97e-05	9.02e-05	7.48e-05	2.41e-04
Benzo(a)anthracene	-	-	-	1.54e-04	5.99e-05	7.03e-04	-	-	-	1.69e-05	5.52e-06	6.07e-05	8.83e-05	2.43e-05	2.46e-04
Benzo(a)pyrene	-	-	-	3.11e-04	4.79e-05	7.18e-04	-	-	-	2.61e-05	1.39e-05	6.14e-05	1.02e-04	1.11e-04	2.46e-04
Benzo(b)fluoranthene	-	-	-	3.17e-04	3.74e-05	8.68e-04	-	-	-	2.66e-05	1.33e-05	6.93e-05	1.03e-04	1.11e-04	2.50e-04
Benzo(g,h,I)perylene	-	-	-	7.03e-05	5.99e-05	3.44e-04	-	-	-	1.16e-05	7.04e-06	4.18e-05	7.81e-05	3.91e-05	2.38e-04
Benzo(k)fluoranthene	-	-	-	2.55e-04	4.94e-05	5.54e-04	-	-	-	2.35e-05	1.40e-05	5.28e-05	1.04e-04	1.11e-04	2.42e-04
Benzoic Acid	-	-	-	1.09e-04	1.80e-05	6.58e-04	-	-	-	5.74e-06	9.43e-07	3.46e-05	2.48e-06	4.08e-07	1.49e-05
Chrysene	-	-	-	2.95e-04	1.05e-05	6.73e-04	-	-	-	2.36e-05	1.80e-06	5.91e-05	8.57e-05	1.24e-05	2.45e-04
DI-n-butyl phthalate	5.30e-06	8.75e-07	2.97e-05	5.90e-05	2.35e-05	3.78e-04	6.07e-06	1.00e-06	3.40e-05	6.33e-05	1.12e-05	3.18e-04	1.18e-04	2.02e-05	2.87e-04
Di-n-octyl phthalate	-	-	-	7.54e-05	2.10e-05	1.50e-04	-	-	-	3.96e-06	1.10e-06	7.86e-06	1.71e-06	4.76e-07	3.40e-06
Dibenzo(a,h)anthracene	-	-	-	3.85e-05	9.73e-06	8.38e-05	-	-	-	2.02e-06	5.11e-07	4.40e-06	8.73e-07	2.21e-07	1.90e-06
Dibenzofuran	-	-	-	1.07e-04	1.47e-05	2.54e-04	-	-	-	5.64e-06	7.70e-07	1.34e-05	2.44e-06	3.33e-07	5.78e-06
Diethyl phthalate	-	-	-	5.28e-05	1.33e-05	3.44e-04	-	-	-	1.14e-05	7.65e-06	4.18e-05	8.51e-05	6.76e-05	2.38e-04
Fluoranthene	-	-	-	9.36e-04	2.54e-05	2.69e-03	-	-	-	6.92e-05	1.27e-05	1.94e-04	2.16e-04	1.11e-04	5.70e-04
Fluorene	-	-	-	1.89e-04	2.39e-05	5.09e-04	-	-	-	9.90e-06	1.26e-06	2.67e-05	4.28e-06	5.44e-07	1.16e-05
Ideno(1,2,3-cd)pyrene	-	-	-	7.43e-05	5.99e-05	3.44e-04	-	-	-	1.20e-05	7.72e-06	4.18e-05	7.99e-05	4.57e-05	2.38e-04
Isophorone	-	-	-	-	-	-	-	-	-	-	-	-	-	-	-
N-Nitrosodiphenylamine	-	-	-	-	-	-	-	-	-	-	-	-	-	-	-
Naphthalene	-	-	-	1.26e-04	9.28e-06	4.04e-04	-	-	-	6.60e-06	4.87e-07	2.12e-05	2.86e-06	2.11e-07	9.17e-06
Pentachlorphenol	-	-	-	-	-	-	-	-	-	-	-	-	-	-	-
Phenanthrene	-	-	-	8.56e-04	1.65e-05	2.39e-03	-	-	-	5.59e-05	2.46e-06	1.61e-04	1.26e-04	1.58e-05	3.99e-04
Phenol	5.90e-06	3.13e-06	2.97e-05	4.28e-05	5.00e-05	1.04e-04	6.76e-06	3.58e-06	3.40e-05	5.58e-05	3.10e-05	2.75e-04	8.19e-07	1.05e-06	1.60e-06
Pyrene	-	-	-	2.44e-04	5.99e-05	1.35e-03	-	-	-	2.33e-05	4.74e-06	9.44e-05	1.07e-04	1.68e-05	2.60e-04
Tributyl phosphate	-	-	-	8.98e-03	7.18e-03	1.08e-02	-	-	-	4.71e-04	3.77e-04	5.66e-04	2.04e-04	1.63e-04	2.45e-04
bis(2-Ethylhexyl) phthalate	1.14e-05	1.31e-06	3.60e-05	1.17e-04	1.56e-05	4.45e-04	1.30e-05	1.50e-06	4.12e-05	1.15e-04	1.61e-05	3.61e-04	5.84e-05	3.32e-05	1.19e-04

Table 1-3
Emissions Data for Volatile Organic Compounds (VOCs)

VOC Polltuant	Controlled Dryer Exhaust Emissions from Exhaust Stack (lb/hr) Per Phase														
	I			II			III			IV			V		
	avg	min	max	avg	min	max	avg	min	max	avg	min	max	avg	min	max
1,1,1-Trichloroethane	1.81e-05	1.68e-06	1.43e-04	1.12e-04	1.08e-04	3.14e-04	1.79e-05	1.66e-06	1.41e-04	8.67e-05	7.60e-05	2.89e-04	1.59e-04	1.33e-04	4.12e-04
1,1-Dichloroethane	-	-	-	5.34e-06	1.93e-06	2.82e-05	-	-	-	3.72e-06	1.24e-06	2.05e-05	3.45e-05	3.03e-06	2.35e-04
1,1-Dichloroethene	-	-	-	4.82e-06	4.42e-06	2.02e-05	-	-	-	2.79e-06	3.10e-06	9.92e-06	8.98e-06	3.36e-06	4.73e-05
1,2-Dichloroethane	-	-	-	5.74e-07	3.62e-07	1.21e-06	-	-	-	-	-	-	5.28e-06	4.05e-06	1.21e-05
1,2-Dichloroethylene	-	-	-	-	-	-	-	-	-	-	-	-	1.35e-05	2.07e-06	7.58e-05
1,4-Dioxane	-	-	-	1.30e-03	5.70e-05	5.11e-03	-	-	-	9.75e-04	2.60e-05	3.87e-03	1.55e-04	1.26e-04	2.45e-04
2-Butanone	3.02e-03	3.02e-03	3.02e-03	4.35e-03	3.89e-03	5.37e-03	2.99e-03	2.99e-03	2.99e-03	4.59e-03	4.27e-03	5.32e-03	2.46e-03	2.29e-03	2.85e-03
2-Hexanone	8.55e-06	5.03e-06	3.02e-05	1.17e-05	6.65e-06	3.69e-05	8.48e-06	4.99e-06	2.99e-05	1.21e-05	6.80e-06	4.02e-05	1.66e-05	8.91e-06	4.91e-05
3-Chloropropene	-	-	-	-	-	-	-	-	-	-	-	-	3.10e-06	2.07e-06	8.27e-06
4-Methyl-2-pentanone	7.92e-06	2.52e-06	3.02e-05	9.55e-06	4.15e-06	3.03e-05	7.86e-06	2.49e-06	2.99e-05	1.10e-05	4.33e-06	3.71e-05	1.47e-05	2.65e-06	7.25e-05
Acetone	3.39e-04	5.03e-06	1.01e-03	4.07e-04	6.44e-05	1.07e-03	3.36e-04	4.99e-06	9.98e-04	4.54e-04	4.09e-05	1.26e-03	4.69e-04	3.20e-04	1.12e-03
Benzene	-	-	-	4.59e-07	2.42e-07	1.27e-06	-	-	-	-	-	-	5.50e-06	4.77e-06	1.66e-05
Carbon Tetrachloride	-	-	-	2.44e-06	1.62e-06	6.49e-06	-	-	-	1.86e-06	1.24e-06	4.96e-06	2.07e-06	1.38e-06	5.51e-06
Carbon Disulfide	-	-	-	-	-	-	-	-	-	-	-	-	2.19e-06	2.07e-06	5.51e-06
Chlorobenzene	-	-	-	-	-	-	-	-	-	-	-	-	-	-	-
Chloroethane	-	-	-	-	-	-	-	-	-	-	-	-	6.51e-06	7.58e-06	2.41e-05
Chloroform	-	-	-	1.01e-04	5.44e-05	1.95e-04	-	-	-	7.70e-05	4.15e-05	1.49e-04	3.20e-04	2.76e-05	8.96e-04
Ethylbenzene	-	-	-	7.25e-05	3.54e-05	2.17e-04	-	-	-	4.96e-05	2.48e-05	1.49e-04	4.60e-05	1.79e-05	1.38e-04
Isobutyl Alcohol	-	-	-	-	-	-	-	-	-	-	-	-	4.72e-05	1.17e-05	1.65e-04
Methylene Chloride	3.52e-04	3.52e-04	3.52e-04	3.76e-04	3.64e-04	5.66e-04	3.49e-04	3.49e-04	3.49e-04	4.40e-04	4.33e-04	5.69e-04	8.05e-04	3.72e-04	1.88e-03
Styrene	-	-	-	-	-	-	-	-	-	-	-	-	2.14e-06	2.07e-06	5.51e-06
Tetrachloroethene	-	-	-	-	-	-	-	-	-	-	-	-	1.95e-04	2.21e-04	3.65e-04
Toluene	-	-	-	7.43e-05	3.25e-05	1.95e-04	-	-	-	5.67e-05	2.48e-05	1.49e-04	7.36e-05	4.14e-05	2.21e-04
Total Xylenes	-	-	-	9.89e-06	1.27e-05	2.17e-05	-	-	-	-	-	-	8.01e-05	7.15e-05	2.78e-04
Trichloroethene	-	-	-	-	-	-	-	-	-	-	-	-	5.48e-05	1.38e-06	1.45e-04
Trichlorofluoromethane	-	-	-	-	-	-	-	-	-	-	-	-	3.10e-06	1.38e-06	9.65e-06
Vinly Chloride	-	-	-	2.37e-05	2.60e-05	4.29e-05	-	-	-	-	-	-	1.35e-04	1.50e-04	2.46e-04

Table 1-3
Emissions Data for Volatile Organic Compounds (VOCs)

VOC Pollutant	Controlled Dryer Exhaust Emissions from Exhaust Stack (lb/hr) Per Phase														
	VI			VII			VIII			IX			X		
	avg	min	max	avg	min	max	avg	min	max	avg	min	max	avg	min	max
1,1,1-Trichloroethane	2.01e-05	1.72e-06	1.46e-04	1.11e-04	1.11e-04	3.62e-04	1.33e-05	1.24e-06	1.05e-04	2.78e-05	2.58e-06	2.19e-04	-	-	-
1,1-Dichloroethane	-	-	-	6.99e-06	3.53e-06	3.13e-05	-	-	-	-	-	-	-	-	-
1,1-Dichloroethene	-	-	-	1.12e-05	4.21e-06	6.89e-05	-	-	-	-	-	-	-	-	-
1,2-Dichloroethane	-	-	-	5.58e-06	4.26e-06	1.18e-05	-	-	-	-	-	-	-	-	-
1,2-Dichloroethylene	-	-	-	1.08e-06	1.65e-07	6.07e-06	-	-	-	-	-	-	-	-	-
1,4-Dioxane	-	-	-	2.66e-04	2.60e-04	4.21e-04	-	-	-	-	-	-	-	-	-
2-Butanone	3.36e-03	3.09e-03	3.09e-03	4.45e-03	4.39e-03	5.12e-03	2.81e-03	2.67e-03	3.80e-03	4.64e-03	4.64e-03	4.64e-03	-	-	-
2-Hexanone	9.52e-06	5.15e-06	3.09e-05	1.87e-05	1.40e-05	5.50e-05	6.32e-06	3.72e-06	2.23e-05	1.31e-05	7.73e-06	4.64e-05	-	-	-
3-Chloropropene	-	-	-	2.48e-07	1.65e-07	6.62e-07	-	-	-	-	-	-	-	-	-
4-Methyl-2-pentanone	8.82e-06	2.57e-06	3.09e-05	8.60e-06	2.57e-06	3.41e-05	5.85e-06	1.86e-06	2.23e-05	1.22e-05	3.87e-06	4.64e-05	-	-	-
Acetone	3.78e-04	5.15e-06	1.03e-03	5.18e-04	1.81e-04	1.33e-03	2.51e-04	3.72e-06	7.43e-04	8.36e-04	8.07e-05	2.52e-03	3.14e-04	7.28e-05	9.76e-04
Benzene	-	-	-	4.56e-06	3.01e-06	1.27e-05	-	-	-	-	-	-	-	-	-
Carbon Tetrachloride	-	-	-	1.65e-07	1.10e-07	4.41e-07	-	-	-	-	-	-	-	-	-
Carbon Disulfide	-	-	-	1.75e-07	1.65e-07	4.41e-07	-	-	-	-	-	-	-	-	-
Chlorobenzene	-	-	-	-	-	-	-	-	-	-	-	-	-	-	-
Chloroethane	-	-	-	5.21e-07	6.07e-07	1.93e-06	-	-	-	-	-	-	-	-	-
Chloroform	-	-	-	2.56e-05	2.21e-06	7.17e-05	-	-	-	-	-	-	-	-	-
Ethylbenzene	-	-	-	7.19e-05	3.30e-05	2.06e-04	-	-	-	-	-	-	-	-	-
Isobutyl Alcohol	-	-	-	3.78e-06	9.38e-07	1.32e-05	-	-	-	-	-	-	-	-	-
Methylene Chloride	3.92e-04	3.60e-04	3.60e-04	5.07e-04	4.71e-04	7.79e-04	5.76e-04	4.91e-04	1.07e-03	5.78e-04	5.48e-04	6.39e-04	3.71e-05	6.51e-06	9.76e-05
Styrene	-	-	-	1.72e-07	1.65e-07	4.41e-07	-	-	-	-	-	-	-	-	-
Tetrachloroethene	-	-	-	1.56e-05	1.76e-05	2.92e-05	1.19e-02	6.35e-04	2.39e-02	-	-	-	-	-	-
Toluene	-	-	-	5.89e-06	3.31e-06	1.76e-05	-	-	-	-	-	-	-	-	-
Total Xylenes	-	-	-	9.52e-05	1.44e-04	2.17e-04	-	-	-	-	-	-	-	-	-
Trichloroethene	-	-	-	4.39e-06	1.10e-07	1.16e-05	2.72e-04	1.40e-04	7.67e-04	-	-	-	-	-	-
Trichlorofluoromethane	-	-	-	2.48e-07	1.10e-07	7.72e-07	-	-	-	-	-	-	-	-	-
Vinly Chloride	-	-	-	2.24e-04	2.94e-04	4.05e-04	-	-	-	-	-	-	-	-	-

Table 1-3
Emissions Data for Volatile Organic Compounds (VOCs)

VOC Polltuant	Controlled Dryer Exhaust Emissions from Exhaust Stack (lb/hr) Per Phase														
	XI			XII			XIII			XIV			XV		
	avg	min	max	avg	min	max	avg	min	max	avg	min	max	avg	min	max
1,1,1-Trichloroethane	-	-	-	2.62e-05	2.09e-05	5.89e-05	4.21e-06	2.59e-06	1.04e-05	1.97e-04	1.63e-04	4.36e-04	-	-	-
1,1-Dichloroethane	-	-	-	3.96e-05	8.87e-06	1.85e-04	3.44e-05	9.06e-06	1.42e-04	6.30e-05	2.72e-06	4.49e-04	-	-	-
1,1-Dichloroethene	-	-	-	4.85e-06	7.64e-06	1.15e-05	4.53e-06	7.76e-06	1.04e-05	5.06e-06	2.72e-06	1.50e-05	-	-	-
1,2-Dichloroethane	-	-	-	4.76e-06	7.80e-06	1.10e-05	4.53e-06	7.76e-06	1.04e-05	4.23e-06	4.08e-06	1.09e-05	-	-	-
1,2-Dichloroethylene	-	-	-	3.01e-06	4.61e-07	1.69e-05	-	-	-	2.67e-05	4.08e-06	1.50e-04	-	-	-
1,4-Dioxane	-	-	-	-	-	-	-	-	-	-	-	-	-	-	-
2-Butanone	9.15e-04	6.86e-04	2.46e-03	1.80e-04	1.01e-04	5.04e-04	1.75e-04	9.06e-05	5.18e-04	1.36e-04	1.36e-04	1.36e-04	-	-	-
2-Hexanone	-	-	-	8.36e-06	2.91e-06	2.28e-05	7.28e-06	2.59e-06	1.94e-05	1.31e-05	4.08e-06	3.95e-05	-	-	-
3-Chloropropene	-	-	-	6.91e-07	4.61e-07	1.84e-06	-	-	-	6.12e-06	4.08e-06	1.63e-05	-	-	-
4-Methyl-2-pentanone	-	-	-	1.08e-05	7.64e-06	3.11e-05	8.90e-06	7.76e-06	1.94e-05	2.11e-05	2.72e-06	1.13e-04	-	-	-
Acetone	3.04e-04	7.05e-05	9.45e-04	2.35e-04	1.05e-04	6.45e-04	3.61e-04	9.12e-05	1.07e-03	5.61e-04	5.15e-04	1.38e-03	2.73e-04	6.33e-05	8.49e-04
Benzene	-	-	-	6.65e-07	7.68e-07	2.15e-06	-	-	-	5.89e-06	6.80e-06	1.91e-05	-	-	-
Carbon Tetrachloride	-	-	-	4.61e-07	3.07e-07	1.23e-06	-	-	-	4.08e-06	2.72e-06	1.09e-05	-	-	-
Carbon Disulfide	-	-	-	4.01e-06	1.68e-06	1.10e-05	3.73e-06	1.29e-06	1.04e-05	4.31e-06	4.08e-06	1.09e-05	-	-	-
Chlorobenzene	-	-	-	3.83e-06	2.45e-06	9.78e-06	4.05e-06	2.59e-06	1.04e-05	-	-	-	-	-	-
Chloroethane	-	-	-	1.45e-06	1.69e-06	5.37e-06	-	-	-	1.28e-05	1.50e-05	4.76e-05	-	-	-
Chloroform	-	-	-	7.12e-05	6.14e-06	2.00e-04	-	-	-	6.31e-04	5.44e-05	1.77e-03	-	-	-
Ethylbenzene	-	-	-	1.64e-04	2.45e-04	3.34e-04	1.73e-04	2.59e-04	3.49e-04	8.70e-06	4.08e-06	3.81e-05	-	-	-
Isobutyl Alcohol	-	-	-	1.05e-05	2.61e-06	3.69e-05	-	-	-	9.32e-05	2.31e-05	3.27e-04	-	-	-
Methylene Chloride	5.32e-04	3.69e-04	1.36e-03	1.63e-04	4.21e-05	4.49e-04	5.94e-05	1.54e-05	1.67e-04	1.12e-03	2.76e-04	3.05e-03	3.23e-05	5.66e-06	8.49e-05
Styrene	-	-	-	4.78e-07	4.61e-07	1.23e-06	-	-	-	4.23e-06	4.08e-06	1.09e-05	-	-	-
Tetrachloroethene	1.87e-02	9.96e-04	3.75e-02	2.18e-04	2.57e-04	3.99e-04	1.84e-04	2.20e-04	3.36e-04	3.86e-04	4.36e-04	7.21e-04	-	-	-
Toluene	-	-	-	1.34e-04	7.03e-05	3.30e-04	1.24e-04	6.47e-05	2.98e-04	1.45e-04	8.17e-05	4.36e-04	-	-	-
Total Xylenes	-	-	-	2.95e-04	2.45e-04	1.12e-03	3.06e-04	2.59e-04	1.15e-03	5.13e-05	4.08e-06	3.13e-04	-	-	-
Trichloroethene	4.27e-04	2.20e-04	1.20e-03	1.65e-05	7.64e-06	4.20e-05	4.53e-06	7.76e-06	1.04e-05	1.08e-04	2.72e-06	2.86e-04	-	-	-
Trichlorofluoromethane	-	-	-	6.91e-07	3.07e-07	2.15e-06	-	-	-	6.12e-06	2.72e-06	1.91e-05	-	-	-
Vinly Chloride	-	-	-	8.69e-06	5.36e-06	2.08e-05	7.93e-06	3.88e-06	1.94e-05	1.06e-05	1.50e-05	2.18e-05	-	-	-

Table 1-3
Emissions Data for Volatile Organic Compounds (VOCs)

VOC Polltuant	Controlled Dryer Exhaust Emissions from Exhaust Stack (lb/hr) Per Phase											
	XVI			XVII			XVIII			XIX		
	avg	min	max	avg	min	max	avg	min	max	avg	min	max
1,1,1-Trichloroethane	1.87e-04	1.55e-04	4.13e-04	-	-	-	9.82e-06	8.12e-06	2.17e-05	4.24e-06	3.51e-06	9.37e-06
1,1-Dichloroethane	5.97e-05	2.58e-06	4.26e-04	-	-	-	3.13e-06	1.35e-07	2.23e-05	1.35e-06	5.85e-08	9.66e-06
1,1-Dichloroethene	4.80e-06	2.58e-06	1.42e-05	-	-	-	2.52e-07	1.35e-07	7.45e-07	1.09e-07	5.85e-08	3.22e-07
1,2-Dichloroethane	4.01e-06	3.87e-06	1.03e-05	-	-	-	2.11e-07	2.03e-07	5.42e-07	9.10e-08	8.78e-08	2.34e-07
1,2-Dichloroethylene	2.53e-05	3.87e-06	1.42e-04	-	-	-	1.33e-06	2.03e-07	7.45e-06	5.74e-07	8.78e-08	3.22e-06
1,4-Dioxane	-	-	-	-	-	-	-	-	-	-	-	-
2-Butanone	1.29e-04	1.29e-04	1.29e-04	-	-	-	6.77e-06	6.77e-06	6.77e-06	2.93e-06	2.93e-06	2.93e-06
2-Hexanone	1.24e-05	3.87e-06	3.74e-05	-	-	-	6.51e-07	2.03e-07	1.96e-06	2.81e-07	8.78e-08	8.49e-07
3-Chloropropene	5.80e-06	3.87e-06	1.55e-05	-	-	-	3.05e-07	2.03e-07	8.12e-07	1.32e-07	8.78e-08	3.51e-07
4-Methyl-2-pentanone	2.00e-05	2.58e-06	1.07e-04	-	-	-	1.05e-06	1.35e-07	5.62e-06	4.54e-07	5.85e-08	2.43e-06
Acetone	6.85e-04	5.24e-04	1.79e-03	3.12e-04	7.25e-05	9.72e-04	2.68e-03	7.32e-04	8.08e-03	1.63e-03	1.27e-03	2.85e-03
Benzene	5.58e-06	6.45e-06	1.81e-05	-	-	-	2.93e-07	3.38e-07	9.48e-07	1.27e-07	1.46e-07	4.10e-07
Carbon Tetrachloride	3.87e-06	2.58e-06	1.03e-05	-	-	-	2.03e-07	1.35e-07	5.42e-07	8.78e-08	5.85e-08	2.34e-07
Carbon Disulfide	4.09e-06	3.87e-06	1.03e-05	-	-	-	2.15e-07	2.03e-07	5.42e-07	9.28e-08	8.78e-08	2.34e-07
Chlorobenzene	-	-	-	-	-	-	-	-	-	-	-	-
Chloroethane	1.22e-05	1.42e-05	4.51e-05	-	-	-	6.39e-07	7.45e-07	2.37e-06	2.76e-07	3.22e-07	1.02e-06
Chloroform	5.98e-04	5.16e-05	1.68e-03	-	-	-	3.14e-05	2.71e-06	8.80e-05	1.36e-05	1.17e-06	3.81e-05
Ethylbenzene	8.24e-06	3.87e-06	3.61e-05	-	-	-	4.33e-07	2.03e-07	1.90e-06	1.87e-07	8.78e-08	8.20e-07
Isobutyl Alcohol	8.83e-05	2.19e-05	3.09e-04	-	-	-	4.64e-06	1.15e-06	1.62e-05	2.01e-06	4.98e-07	7.03e-06
Methylene Chloride	1.08e-03	2.64e-04	2.93e-03	3.70e-05	6.48e-06	9.72e-05	4.27e-04	1.30e-04	1.07e-03	7.75e-04	6.35e-04	1.48e-03
Styrene	4.01e-06	3.87e-06	1.03e-05	-	-	-	2.11e-07	2.03e-07	5.42e-07	9.10e-08	8.78e-08	2.34e-07
Tetrachloroethene	3.65e-04	4.13e-04	6.83e-04	-	-	-	1.92e-05	2.17e-05	3.59e-05	8.29e-06	9.37e-06	1.55e-05
Toluene	1.38e-04	7.74e-05	4.13e-04	-	-	-	7.23e-06	4.06e-06	2.17e-05	3.13e-06	1.76e-06	9.37e-06
Total Xylenes	4.86e-05	3.87e-06	2.97e-04	-	-	-	2.55e-06	2.03e-07	1.56e-05	1.10e-06	8.78e-08	6.73e-06
Trichloroethene	1.03e-04	2.58e-06	2.71e-04	-	-	-	5.39e-06	1.35e-07	1.42e-05	2.33e-06	5.85e-08	6.15e-06
Trichlorofluoromethane	5.80e-06	2.58e-06	1.81e-05	-	-	-	3.05e-07	1.35e-07	9.48e-07	1.32e-07	5.85e-08	4.10e-07
Vinly Chloride	1.00e-05	1.42e-05	2.06e-05	-	-	-	5.27e-07	7.45e-07	1.08e-06	2.28e-07	3.22e-07	4.68e-07

Table 1-4
Emissions Data for Regulated Toxic Metals

Particulate Metals Polltuant	Controlled Dryer Exhaust Emissions from Exhaust Stack (lb/hr) Per Phase														
	I			II			III			IV			V		
	avg	min	max	avg	min	max	avg	min	max	avg	min	max	avg	min	max
Anitmony	4.68e-09	1.11e-09	9.18e-09	1.05e-08	2.15e-09	2.43e-08	4.64e-09	1.10e-09	9.10e-09	9.84e-09	2.00e-09	2.24e-08	1.66e-08	2.56e-09	4.55e-08
Arsenic	1.31e-06	9.97e-10	5.38e-06	8.94e-07	1.31e-09	3.67e-06	1.30e-06	9.89e-10	5.33e-06	1.28e-06	1.08e-09	5.28e-06	6.71e-07	3.46e-09	2.74e-06
Beryllium	1.27e-09	1.73e-10	3.47e-09	1.64e-09	3.27e-10	4.39e-09	1.26e-09	1.72e-10	3.44e-09	1.71e-09	2.88e-10	4.74e-09	3.58e-09	4.45e-10	9.30e-09
Cadmium	1.92e-09	3.18e-10	5.58e-09	2.66e-09	3.75e-10	6.52e-09	1.91e-09	3.15e-10	5.53e-09	2.85e-09	4.01e-10	7.46e-09	2.83e-09	4.92e-10	7.68e-09
Chromium	1.78e-08	4.15e-09	3.38e-08	2.93e-08	5.47e-09	7.45e-08	1.76e-08	4.11e-09	3.35e-08	2.91e-08	5.35e-09	7.03e-08	7.50e-08	8.79e-09	2.11e-07
Cobalt	3.38e-09	1.24e-09	7.33e-09	1.16e-08	3.67e-09	2.68e-08	3.36e-09	1.23e-09	7.26e-09	5.28e-09	1.74e-09	1.22e-08	4.57e-08	1.26e-08	1.09e-07
Lead	5.46e-08	1.98e-09	1.21e-07	4.48e-08	3.80e-09	1.03e-07	5.41e-08	1.96e-09	1.20e-07	5.55e-08	2.48e-09	1.28e-07	6.04e-08	1.32e-08	1.12e-07
Manganese	1.36e-06	4.93e-08	2.92e-06	1.07e-06	4.86e-08	2.54e-06	1.35e-06	4.89e-08	2.89e-06	1.43e-06	5.53e-08	3.27e-06	1.12e-06	1.38e-07	2.31e-06
Mercury	2.30e-10	1.73e-11	7.37e-10	1.89e-10	3.35e-11	5.72e-10	2.28e-10	1.72e-11	7.31e-10	2.38e-10	2.77e-11	7.56e-10	2.38e-10	6.52e-11	5.94e-10
Nickel	1.97e-08	3.18e-09	7.28e-08	2.51e-08	4.85e-09	7.69e-08	1.96e-08	3.15e-09	7.22e-08	2.21e-08	3.70e-09	7.85e-08	6.41e-08	1.31e-08	1.62e-07

Table 1-4
Emissions Data for Regulated Toxic Metals

Particulate Metals Polltuant	Controlled Dryer Exhaust Emissions from Exhaust Stack (lb/hr) Per Phase														
	VI			VII			VIII			IX			X		
	avg	min	max	avg	min	max	avg	min	max	avg	min	max	avg	min	max
Anitmony	5.21e-12	1.14e-12	9.39e-12	9.41e-09	1.16e-09	1.74e-08	3.46e-09	8.22e-10	6.78e-09	7.91e-09	1.83e-09	1.65e-08	7.18e-10	1.15e-10	2.35e-09
Arsenic	1.45e-09	1.02e-12	5.50e-09	1.29e-06	9.98e-10	5.30e-06	9.71e-07	3.20e-09	3.98e-06	2.03e-06	5.25e-09	8.34e-06	2.57e-08	3.71e-09	7.47e-08
Beryllium	1.41e-12	1.77e-13	3.55e-12	3.00e-09	1.75e-10	6.51e-09	1.21e-09	2.70e-10	3.37e-09	2.19e-09	2.96e-10	5.93e-09	2.47e-10	2.94e-11	5.98e-10
Cadmium	2.14e-12	3.25e-13	5.71e-12	2.84e-09	3.20e-10	7.04e-09	1.64e-09	3.06e-10	5.87e-09	3.09e-09	5.26e-10	9.03e-09	1.36e-10	3.74e-11	4.54e-10
Chromium	1.98e-11	4.24e-12	3.46e-11	3.95e-08	4.17e-09	7.50e-08	1.52e-08	3.80e-09	3.36e-08	3.05e-08	7.07e-09	5.79e-08	3.20e-09	6.94e-10	5.95e-09
Cobalt	3.77e-12	1.27e-12	7.49e-12	6.76e-08	1.26e-09	1.53e-07	6.19e-09	4.61e-09	9.11e-09	5.82e-09	2.18e-09	1.24e-08	6.21e-10	2.67e-10	1.17e-09
Lead	6.07e-11	2.02e-12	1.24e-10	1.02e-07	2.17e-09	1.93e-07	4.92e-08	5.24e-09	1.05e-07	8.79e-08	4.62e-09	1.92e-07	4.07e-09	1.58e-09	6.30e-09
Manganese	1.52e-09	5.04e-11	2.99e-09	1.50e-06	5.47e-08	3.19e-06	1.03e-06	4.04e-08	2.20e-06	2.14e-06	8.50e-08	4.61e-06	4.86e-08	9.24e-09	1.27e-07
Mercury	2.56e-13	1.77e-14	7.54e-13	3.90e-10	1.82e-11	9.81e-10	1.70e-10	1.28e-11	5.44e-10	3.82e-10	3.74e-11	1.18e-09	2.88e-11	1.07e-11	4.81e-11
Nickel	2.20e-11	3.25e-12	7.45e-11	9.61e-08	3.21e-09	2.44e-07	1.70e-08	3.44e-09	6.10e-08	3.37e-08	5.58e-09	1.19e-07	3.38e-09	6.94e-10	6.59e-09

Table 1-4
Emissions Data for Regulated Toxic Metals

Particulate Metals Polltuant	Controlled Dryer Exhaust Emissions from Exhaust Stack (lb/hr) Per Phase														
	XI			XII			XIII			XIV			XV		
	avg	min	max	avg	min	max	avg	min	max	avg	min	max	avg	min	max
Anitmony	6.95e-10	1.11e-10	2.28e-09	5.02e-09	1.76e-09	1.32e-08	2.86e-09	1.72e-09	6.25e-09	2.39e-08	1.80e-09	7.56e-08	6.24e-10	9.98e-11	2.05e-09
Arsenic	3.43e-08	7.45e-09	8.95e-08	1.50e-08	3.12e-09	4.11e-08	2.87e-08	5.13e-09	8.11e-08	1.45e-08	2.41e-09	4.15e-08	2.23e-08	3.23e-09	6.50e-08
Beryllium	6.70e-10	2.51e-10	1.85e-09	1.16e-09	1.31e-10	4.97e-09	8.82e-10	1.40e-10	4.15e-09	4.10e-09	1.26e-10	1.22e-08	2.15e-10	2.55e-11	5.20e-10
Cadmium	4.77e-10	1.48e-10	3.18e-09	1.62e-09	1.45e-10	8.49e-09	1.46e-09	1.48e-10	8.24e-09	2.76e-09	2.24e-10	8.41e-09	1.18e-10	3.25e-11	3.95e-10
Chromium	6.41e-09	1.83e-09	1.92e-08	2.53e-08	3.72e-09	6.15e-08	1.53e-08	3.97e-09	2.61e-08	1.12e-07	3.02e-09	3.55e-07	2.78e-09	6.04e-10	5.18e-09
Cobalt	6.40e-09	6.06e-09	6.93e-09	1.08e-08	1.59e-09	2.87e-08	1.01e-08	1.75e-09	2.59e-08	1.41e-08	7.29e-10	4.36e-08	5.40e-10	2.32e-10	1.02e-09
Lead	1.79e-08	7.46e-09	3.13e-08	3.58e-08	3.98e-09	6.32e-08	3.89e-08	4.38e-09	6.83e-08	1.15e-08	6.12e-09	1.82e-08	3.54e-09	1.37e-09	5.48e-09
Manganese	8.29e-08	1.53e-08	1.92e-07	1.92e-07	4.71e-08	5.66e-07	1.45e-07	3.55e-08	5.06e-07	7.14e-07	1.64e-07	1.39e-06	4.22e-08	8.03e-09	1.10e-07
Mercury	2.79e-11	1.03e-11	4.65e-11	1.39e-10	3.31e-11	2.90e-10	1.55e-10	3.71e-11	3.14e-10	6.94e-11	3.39e-11	1.71e-10	2.51e-11	9.29e-12	4.18e-11
Nickel	7.11e-09	2.39e-09	1.78e-08	2.26e-08	3.88e-09	5.22e-08	2.33e-08	4.24e-09	5.23e-08	2.15e-08	2.22e-09	5.58e-08	2.94e-09	6.04e-10	5.73e-09

Table 1-4
Emissions Data for Regulated Toxic Metals

Particulate Metals Polltuant	Controlled Dryer Exhaust Emissions from Exhaust Stack (lb/hr) Per Phase											
	XVI			XVII			XVIII			XIX		
	avg	min	max	avg	min	max	avg	min	max	avg	min	max
Anitmony	2.30e-08	1.76e-09	7.28e-08	7.15e-10	1.14e-10	2.34e-09	7.09e-09	1.02e-09	2.32e-08	2.64e-09	2.57e-10	9.40e-09
Arsenic	2.63e-08	4.10e-09	7.60e-08	2.55e-08	3.70e-09	7.44e-08	2.05e-07	2.99e-08	5.95e-07	7.99e-09	3.69e-09	1.44e-08
Beryllium	4.01e-09	1.34e-10	1.18e-08	2.46e-10	2.92e-11	5.95e-10	2.24e-09	2.54e-10	5.57e-09	8.00e-10	1.49e-10	2.47e-09
Cadmium	2.68e-09	2.31e-10	8.19e-09	1.36e-10	3.72e-11	4.52e-10	1.30e-09	3.37e-10	4.19e-09	8.87e-10	2.97e-10	1.93e-09
Chromium	1.07e-07	3.20e-09	3.39e-07	3.19e-09	6.91e-10	5.93e-09	3.32e-08	6.21e-09	6.97e-08	2.54e-08	5.57e-09	5.54e-08
Cobalt	1.37e-08	8.22e-10	4.18e-08	6.18e-10	2.66e-10	1.17e-09	5.99e-09	2.34e-09	1.21e-08	3.96e-09	1.89e-09	7.19e-09
Lead	1.29e-08	6.57e-09	2.03e-08	4.06e-09	1.57e-09	6.27e-09	3.90e-08	1.34e-08	6.56e-08	6.00e-08	5.82e-09	1.44e-07
Manganese	7.00e-07	1.60e-07	1.38e-06	4.84e-08	9.20e-09	1.26e-07	5.78e-07	9.91e-08	1.57e-06	1.55e-06	1.76e-07	4.86e-06
Mercury	7.99e-11	3.73e-11	1.86e-10	2.87e-11	1.06e-11	4.78e-11	2.92e-10	9.63e-11	5.00e-10	5.86e-10	9.81e-11	1.08e-09
Nickel	2.20e-08	2.45e-09	5.61e-08	3.36e-09	6.91e-10	6.57e-09	3.02e-08	6.41e-09	6.07e-08	2.38e-08	7.82e-09	5.67e-08

Table 1-5
Radon Content of Stack Gases from OU1 Blended Batches
Based on Blending Plan in BAFO Final and Final RI/FS Concentration Data

Oper. Phase	KTons Pit 1	KTons Pit 2	KTons Pit 3	KTons Pit 4	KTons Pit 5	KTons Pit 6	KTons Burn	Ktons Clear	Total KTons Phase	Ra in Phase pCi/g	Rn in Efflu't pCi/Hr	Efflu't Rn Cn pCi/L
1			2.5						4.2	102	2.79e+09	437.9
2	72.4	5.4	51.0						129	115	3.12e+09	490.5
3			23.5						40.9	98.8	2.69e+09	422.6
4			24.2						42.4	98.2	2.67e+09	419.8
5			24.7	40.2					84.1	61.7	1.68e+09	263.9
6			8.1						13.7	102	2.77e+09	434.9
7			11.2	0.8					19.7	98.7	2.69e+09	422.3
8			12.2			16.2			28.4	76.1	2.07e+09	325.5
9					5.2				48.3	9.04	2.46e+08	38.68
10					3.4				31.2	9.15	2.49e+08	39.15
11					0.7				6.7	8.78	2.39e+08	37.53
12				4.8	2.1		38.0		44.8	18.9	5.15e+08	80.89
13					0.5				4.8	8.75	2.38e+08	37.42

Table 1-5
Radon Content of Stack Gases from OU1 Blended Batches
Based on Blending Plan in BAFO Final and Final RI/FS Concentration Data

Oper. Phase	KTons Pit 1	KTons Pit 2	KTons Pit 3	KTons Pit 4	KTons Pit 5	KTons Pit 6	KTons Burn	Ktons Clear	Total KTons Phase	Ra in Phase pCi/g	Rn in Efflu't pCi/Hr	Efflu't Rn Cn pCi/L
14				47.6	2.9				50.6	26.8	7.31e+08	114.7
15					0.05				0.5	8.4	2.29e+08	35.92
16					1.6				14.5	9.27	2.52e+08	39.64
17					2.9				26.8	9.09	2.48e+08	38.87
18				1.8				3.8	37.5	8.62	2.35e+08	36.87
19				0.1					6.2	0.38	1.03e+07	1.614

Notes: Radium assumed to be insignificant in Subsoil, OU1 Contaminated Soil Stockpile, and covers.
Data for radium in Pits 5, 6, and clearwell are from RI Draft dated Oct. 12, 1993 (Table 4-5); remainder are from final RI Report (same table).

Pit 1 = 50.6 pCi/g Avg; Pit 2 = 437 pCi/g Avg; Pit 3 = 172 pCi/g Avg; Pit 4 = 23.4 pCi/g Avg; Pit 5 = 84 pCi/g Avg; Pit 6 = 3.9 pCi/g Avg; Burn Pit = 14.7 pCi/g Avg; Clearwell = 74 pCi/g Avg.

No CIS data available for radium.
Feed to dryer @ 30 tons/hr.

Table 1-6
Emissions Estimate for Furnace Stack
(Combustion Emissions for Fuel Oil and Natural Gas)

Pollutant	Emissions	
	(lb/hr)	(tons/yr)
NOx*	5.74E+00	1.72E+01
CO	2.05E+00	6.15E+00
SOx	4.27E-02	1.28E-01
PM-10	3.70E-01	1.11E+00
Total VOC	1.51E-01	4.53E-01
Formaldehyde	8.06E-03	2.42E-02
Total PAH	2.30E-04	6.91E-04
Arsenic	3.45E-05	1.04E-04
Beryllium	2.06E-05	6.17E-05
Cadmium	9.05E-05	2.71E-04
Chromium	5.51E-04	1.65E-03
Lead	7.32E-05	2.20E-04
Manganese	1.15E-04	6.45E-04
Mercury	5.93E-04	1.78E-03
Nickel	1.40E-03	4.19E-09

Note: NOx emissions were calculated using a 30% reduction due to use of low-NOx burners in the furnace design.

Table 1-7
Emissions Estimate from Laundry Facility

Compound	1st Screen	2nd Screen	Maximum Concentration				
			Pit Soil ug/kg		Emsn Conc mg/m^3	Emsn Rate lbs./hr	Emsn Limit lbs./hr
Hydrogen Flouride	Removed						
Hydrogen Chloride	Removed						
Nitric Acid	Removed						
Sulfuric Acid	Removed						
Ammonia	Removed						
Nitrogen Dioxide	Removed						
Sulfer Dioxide	Removed						
Radon	Removed						
Carbon Dioxide	Removed						
1,1,1-Trichloroethane	Removed						
1,1,2,2-Tetrachloroethane	Removed						
1,1-Dichloroethane	Removed						
1,1-Dichloroethene	Removed						
1,2-Dichloroethylene	Removed						
1,4-Dioxane	Removed						
2,4-Dinitrotoluene	Removed						
2-Butanone	Removed						
2-Hexanone	Pass	Removed					
2-Methylnaphthalene	Pass	Pass	7000		2.34E-03	9.35E-05	19.64
4,4 DDT	Pass	Pass	1600		5.34E-04	2.14E-05	0.55
Acetone	Removed						
Benzene	Removed						
Carbon Disulfide	Removed						
Carbon Tetrachloride	Removed						
Chlorobenzene	Removed						
Chloroform	Removed						
Dichlorodifluoromethane	Removed						
Dichloromethane	Removed						
Diethyl Phthalate	Pass	Removed					
Ethylbenzene	Pass	Pass	360		1.20E-04	4.81E-06	2369.62
Hexachloroethane	Pass	Removed					
Isobutyl alcohol	Removed						
Isophorone	Pass	Removed					
Hethylene Chloride	Removed						
Naphthalene	Pass	Pass	16000		5.34E-03	2.14E-04	28.4
Pentachlorophenol	Pass	Pass	2600		8.68E-04	3.47E-05	0.27
Phenol	Removed						
Styrene	Pass	Removed					
Tetrachloroethene	Removed						
Toluene	Removed						
Total Xylene	Removed						
Tributyl Phosphate	Removed						
Trans-1,2-Dichloroethene	Removed						
Trichloroethene	Removed						
Trichlorofluoromethane	Removed						
Vinyl Chloride	Removed						

Assumptions:

1) Each dryer operates at max. flow rate (cfm) =	2000
2) Max. capacity dry clothing per washer (lbs.) =	50
3) Pit Soil on clothing to washer =	25% by wt.
4) Carry over factor from washer to dryer =	0.1
5) Release fraction from dryer =	100%
6) Drying time per load of laundry (min.) =	30
7) Dryers operate constantly during each hour =	5

000613

Table 1-8
Emissions Estimate from Onsite Laboratory

		Total Emissions from Samples (per Operation Phase)																		
		1	2	3	4	5	6	7	8	9	10	11	12	13	14	15	16	17	18	19
Pollutant	units	max	max	max	max	max	max	max	max	max	max	max	max	max	max	max	max	max	max	max
1,1,1-Trichloroethane	lb/hr	5.92e-07	2.18e-06	5.91e-07	1.34e-06	2.50e-06	5.95e-07	2.43e-06	5.36e-07	7.09e-07	-	-	8.13e-07	3.34e-08	1.37e-06	-	1.34e-06	-	7.39e-07	3.89e-07
1,1-Dichloroethane	lb/hr	-	1.66e-07	-	1.04e-07	1.14e-06	-	8.26e-07	-	-	-	-	1.25e-06	4.60e-07	1.41e-06	-	1.38e-06	-	7.62e-07	1.48e-08
1,1-Dichloroethene	lb/hr	-	3.31e-07	-	5.04e-08	3.61e-07	-	3.94e-07	-	-	-	-	5.94e-08	3.34e-08	4.71e-08	-	4.59e-08	-	2.54e-08	4.92e-10
1,2-Dichloroethane	lb/hr	-	4.59e-08	-	-	8.02e-08	-	7.98e-08	-	-	-	-	5.21e-08	3.34e-08	3.43e-08	-	3.34e-08	-	1.85e-08	3.58e-10
1,2-Dichloroethylene	lb/hr	-	-	-	-	3.58e-07	-	2.52e-07	-	-	-	-	2.68e-07	-	4.71e-07	-	4.59e-07	-	2.54e-07	4.92e-09
1,4-Dioxane	lb/hr	-	2.32e-05	-	1.97e-05	2.00e-06	-	2.27e-06	-	-	-	-	-	-	-	-	-	-	-	-
2-Butanone	lb/hr	1.25e-05	3.29e-05	1.25e-05	2.44e-05	2.09e-05	1.26e-05	2.43e-05	1.79e-05	1.50e-05	-	7.94e-06	1.87e-06	1.67e-06	4.28e-07	-	4.17e-07	-	2.31e-07	7.94e-06
2-Hexanone	lb/hr	1.25e-07	2.66e-07	1.25e-07	1.78e-07	3.11e-07	1.26e-07	3.20e-07	1.13e-07	1.50e-07	-	-	1.32e-07	6.27e-08	1.24e-07	-	1.21e-07	-	6.69e-08	8.07e-08
3-Chloropropene	lb/hr	-	-	-	-	3.91e-08	-	2.75e-08	-	-	-	-	2.93e-08	-	5.14e-08	-	5.01e-08	-	2.77e-08	5.36e-10
4-Methyl-2-pentanone	lb/hr	1.25e-07	1.52e-07	1.25e-07	1.62e-07	3.73e-07	1.26e-07	3.14e-07	1.13e-07	1.50e-07	-	-	2.64e-07	6.27e-08	3.55e-07	-	3.46e-07	-	1.92e-07	8.31e-08
Acetone	lb/hr	4.18e-06	6.41e-06	4.17e-06	5.51e-06	6.94e-06	4.20e-06	7.25e-06	3.78e-06	2.04e-05	1.54e-05	1.53e-05	1.65e-05	1.57e-05	1.74e-05	1.52e-05	1.80e-05	1.54e-05	3.20e-05	1.14e-05
Benzene	lb/hr	-	4.82e-08	-	-	1.02e-07	-	9.66e-08	-	-	-	-	3.41e-08	-	6.00e-08	-	5.84e-08	-	3.23e-08	6.26e-10
Carbon Tetrachloride	lb/hr	-	2.76e-08	-	2.52e-08	2.61e-08	-	1.83e-08	-	-	-	-	1.95e-08	-	3.43e-08	-	3.34e-08	-	1.85e-08	3.58e-10
Carbon Disulfide	lb/hr	-	-	-	-	2.61e-08	-	1.83e-08	-	-	-	-	5.21e-08	3.34e-08	3.43e-08	-	3.34e-08	-	1.85e-08	3.58e-10
Chlorobenzene	lb/hr	-	-	-	-	-	-	-	-	-	-	-	3.26e-08	3.34e-08	-	-	-	-	-	-
Chloroethane	lb/hr	-	-	-	-	1.14e-07	-	8.01e-08	-	-	-	-	8.54e-08	-	1.50e-07	-	1.46e-07	-	8.08e-08	1.56e-09
Chloroform	lb/hr	-	8.27e-07	-	7.56e-07	4.23e-06	-	2.98e-06	-	-	-	-	3.17e-06	-	5.57e-06	-	5.43e-06	-	3.00e-06	5.81e-08
Ethylbenzene	lb/hr	-	1.65e-06	-	7.56e-07	1.07e-06	-	1.17e-06	-	-	-	-	1.17e-06	1.13e-06	1.20e-07	-	1.17e-07	-	6.46e-08	1.25e-09
Isobutyl Alcohol	lb/hr	-	-	-	-	7.82e-07	-	5.49e-07	-	-	-	-	5.85e-07	-	1.03e-06	-	1.00e-06	-	5.54e-07	1.07e-08
Methylene Chloride	lb/hr	1.46e-06	3.80e-06	1.46e-06	2.59e-06	9.85e-06	1.47e-06	8.18e-06	4.72e-06	3.29e-06	1.54e-06	5.63e-06	7.05e-06	1.77e-06	1.09e-05	1.52e-06	1.07e-05	1.54e-06	1.01e-05	5.39e-06
Styrene	lb/hr	-	-	-	-	2.61e-08	-	1.83e-08	-	-	-	-	1.95e-08	-	3.43e-08	-	3.34e-08	-	1.85e-08	3.58e-10
Tetrachloroethene	lb/hr	-	-	-	-	1.73e-06	-	1.21e-06	1.00e-04	-	-	1.21e-04	2.35e-06	1.09e-06	2.27e-06	-	2.21e-06	-	1.22e-06	2.37e-08
Toluene	lb/hr	-	8.27e-07	-	7.56e-07	1.04e-06	-	7.32e-07	-	-	-	-	1.72e-06	9.61e-07	1.37e-06	-	1.34e-06	-	7.39e-07	1.43e-08
Total Xylenes	lb/hr	-	8.27e-07	-	-	1.72e-06	-	1.63e-06	-	-	-	-	4.18e-06	3.72e-06	9.85e-07	-	9.60e-07	-	5.31e-07	1.03e-08
Trichloroethene	lb/hr	-	-	-	-	6.84e-07	-	4.81e-07	3.22e-06	-	-	3.89e-06	5.45e-07	3.34e-08	8.99e-07	-	8.76e-07	-	4.85e-07	9.39e-09
Trichlorofluoromethane	lb/hr	-	-	-	-	4.56e-08	-	3.20e-08	-	-	-	-	3.41e-08	-	6.00e-08	-	5.84e-08	-	3.23e-08	6.26e-10
Vinly Chloride	lb/hr	-	1.63e-06	-	-	1.98e-06	-	2.22e-06	-	-	-	-	1.00e-07	6.27e-08	6.85e-08	-	6.68e-08	-	3.69e-08	7.15e-10
4,4-DDT	lb/hr	-	8.73e-06	-	5.04e-06	3.79e-06	-	4.30e-06	-	-	-	-	-	-	-	-	-	-	-	-
Aroclor-1221	lb/hr	-	2.07e-05	-	1.89e-05	-	-	-	-	-	-	-	-	-	-	-	-	-	-	-
Aroclor-1242	lb/hr	-	-	-	-	3.37e-06	-	2.37e-06	-	-	-	-	4.72e-06	2.26e-06	4.43e-06	-	4.32e-06	-	3.19e-06	1.49e-06
Aroclor-1248	lb/hr	1.67e-05	6.05e-05	1.67e-05	4.81e-05	5.14e-05	1.68e-05	4.88e-05	1.51e-05	2.76e-05	7.57e-06	7.54e-06	2.76e-05	9.80e-06	3.93e-05	7.47e-06	3.89e-05	7.56e-06	3.08e-05	1.24e-05
Aroclor-1254	lb/hr	1.18e-05	5.52e-05	1.18e-05	5.27e-05	3.18e-05	1.19e-05	2.73e-05	1.29e-05	2.93e-05	1.51e-05	1.78e-05	6.22e-05	4.73e-05	4.36e-05	1.49e-05	4.35e-05	1.51e-05	4.28e-05	1.10e-05
Aroclor-1260	lb/hr	-	2.69e-05	-	2.46e-05	-	-	-	-	-	-	-	-	-	-	-	-	-	-	-
2,4,5-Trichlorophenol	lb/hr	-	-	-	-	-	-	-	-	-	-	-	-	-	-	-	-	-	1.84e-05	3.32e-05
2,4-Dichlorophenol	lb/hr	-	-	-	-	7.49e-06	-	5.26e-06	-	-	-	-	5.61e-06	-	9.85e-06	-	9.60e-06	-	5.31e-06	1.03e-07
2,4-Dinitrophenol	lb/hr	-	-	-	-	3.58e-05	-	2.52e-05	-	-	-	-	2.68e-05	-	4.71e-05	-	4.59e-05	-	2.54e-05	4.92e-07
2,6-Dinitrotoluene	lb/hr	3.48e-06	3.08e-06	3.47e-06	3.46e-06	2.85e-06	3.50e-06	3.46e-06	3.15e-06	4.17e-06	-	-	-	-	-	-	-	-	-	2.20e-06
2-Chlorophenol	lb/hr	-	6.66e-06	-	-	7.86e-06	-	8.91e-06	-	-	-	-	-	-	-	-	-	-	-	-
2-Methylnaphthalene	lb/hr	-	2.10e-05	-	2.84e-06	2.47e-05	-	2.65e-05	-	-	-	-	6.47e-06	3.89e-06	4.71e-06	-	4.59e-06	-	2.54e-06	4.92e-08
3-Methylphenol	lb/hr	-	3.10e-06	-	2.84e-06	1.53e-06	-	1.08e-06	-	-	-	-	1.15e-06	-	2.01e-06	-	1.96e-06	-	1.08e-06	2.10e-08
3,3-Dichlorobenzidine	lb/hr	-	3.79e-06	-	3.47e-06	-	-	-	-	-	-	-	-	-	-	-	-	-	-	-
4-Chloro-3-methylphenol	lb/hr	-	6.66e-06	-	-	1.53e-05	-	1.42e-05	-	-	-	-	5.61e-06	-	9.85e-06	-	9.60e-06	-	5.31e-06	1.03e-07
4-Methylphenol	lb/hr	-	6.66e-06	-	-	9.39e-06	-	9.99e-06	-	-	-	-	1.15e-06	-	2.01e-06	-	1.96e-06	-	1.08e-06	2.10e-08

Table 1-8
Emissions Estimate from Onsite Laboratory

		Total Emissions from Samples (per Operation Phase)																		
		1	2	3	4	5	6	7	8	9	10	11	12	13	14	15	16	17	18	19
Pollutant	units	max	max	max	max	max	max	max	max	max	max	max	max	max	max	max	max	max	max	max
4-Nitroaniline	lb/hr	-	1.81e-05	-	-	2.14e-05	-	2.43e-05	-	-	-	-	-	-	-	-	-	-	-	-
4-Nitrophenol	lb/hr	-	3.22e-05	-	-	3.79e-05	-	4.30e-05	-	-	-	-	-	-	-	-	-	-	-	-
Acenaphthene	lb/hr	-	9.88e-05	-	-	1.23e-04	-	1.36e-04	-	-	-	-	9.11e-06	4.60e-06	8.14e-06	-	7.93e-06	-	4.39e-06	8.49e-08
Acenaphthylene	lb/hr	3.48e-06	9.74e-06	3.47e-06	3.46e-06	1.07e-05	3.50e-06	1.24e-05	3.15e-06	4.17e-06	-	-	-	-	-	-	-	-	-	2.20e-06
Anthracene	lb/hr	3.48e-06	2.81e-04	3.47e-06	5.16e-06	3.39e-04	3.50e-06	3.80e-04	3.15e-06	4.17e-06	-	-	2.07e-05	1.30e-05	1.41e-05	-	1.38e-05	-	1.10e-05	8.46e-06
Benzo(a)anthracene	lb/hr	3.48e-06	3.04e-04	3.47e-06	5.16e-06	3.70e-04	3.50e-06	4.14e-04	3.15e-06	4.17e-06	-	-	3.71e-05	2.63e-05	2.01e-05	-	1.96e-05	-	1.42e-05	8.52e-06
Benzo(a)pyrene	lb/hr	3.48e-06	2.81e-04	3.47e-06	5.16e-06	3.44e-04	3.50e-06	3.83e-04	3.15e-06	4.17e-06	-	-	2.76e-05	1.63e-05	2.06e-05	-	2.00e-05	-	1.45e-05	8.53e-06
Benzo(b)fluoranthene	lb/hr	3.48e-06	3.03e-04	3.47e-06	4.94e-06	3.74e-04	3.50e-06	4.16e-04	3.15e-06	4.17e-06	-	-	5.32e-05	4.01e-05	2.48e-05	-	2.42e-05	-	1.68e-05	8.57e-06
Benzo(g,h,I)perylene	lb/hr	3.48e-06	9.95e-05	3.47e-06	3.46e-06	1.24e-04	3.50e-06	1.38e-04	3.15e-06	4.17e-06	-	-	1.74e-05	1.21e-05	9.85e-06	-	9.60e-06	-	8.71e-06	8.42e-06
Benzo(k)fluoranthene	lb/hr	-	1.74e-04	-	1.70e-06	2.15e-04	-	2.39e-04	-	-	-	-	2.94e-05	2.09e-05	1.58e-05	-	1.54e-05	-	1.19e-05	6.28e-06
Benzoic Acid	lb/hr	1.71e-05	6.01e-05	1.70e-05	3.08e-05	6.35e-05	1.71e-05	6.70e-05	1.54e-05	2.04e-05	-	-	1.07e-05	-	1.88e-05	-	1.84e-05	-	1.02e-05	1.10e-05
Chrysene	lb/hr	3.48e-06	2.35e-04	3.47e-06	5.16e-06	2.88e-04	3.50e-06	3.21e-04	3.15e-06	4.17e-06	-	-	4.23e-05	3.22e-05	1.93e-05	-	1.88e-05	-	1.38e-05	8.52e-06
DI-n-butyl phthalate	lb/hr	3.48e-06	9.85e-06	3.47e-06	6.30e-06	1.47e-05	3.50e-06	1.36e-05	3.15e-06	8.81e-06	4.64e-06	4.62e-06	1.20e-05	6.67e-06	1.43e-05	4.58e-06	1.42e-05	4.64e-06	1.72e-05	9.73e-06
Di-n-octyl phthalate	lb/hr	-	9.52e-06	-	2.62e-06	1.11e-05	-	1.12e-05	-	-	-	-	4.47e-06	2.09e-06	4.28e-06	-	4.17e-06	-	2.31e-06	4.47e-08
Dibenzo(a,h)anthracene	lb/hr	-	4.59e-05	-	-	5.60e-05	-	6.27e-05	-	-	-	-	1.37e-06	-	2.40e-06	-	2.34e-06	-	1.29e-06	2.50e-08
Dibenzofuran	lb/hr	-	8.27e-05	-	-	1.03e-04	-	1.15e-04	-	-	-	-	7.93e-06	3.89e-06	7.28e-06	-	7.09e-06	-	3.92e-06	7.60e-08
Diethyl phthalate	lb/hr	1.50e-05	1.99e-05	1.49e-05	1.49e-05	2.76e-05	1.50e-05	2.90e-05	1.35e-05	1.79e-05	-	-	2.60e-05	2.09e-05	9.85e-06	-	9.60e-06	-	8.71e-06	1.57e-05
Fluoranthene	lb/hr	3.48e-06	1.13e-03	3.47e-06	6.61e-06	1.39e-03	3.50e-06	1.55e-03	3.15e-06	4.17e-06	-	-	1.09e-04	6.69e-05	7.71e-05	-	7.51e-05	-	4.91e-05	1.65e-05
Fluorene	lb/hr	-	1.42e-04	-	-	1.79e-04	-	1.98e-04	-	-	-	-	1.52e-05	7.11e-06	1.46e-05	-	1.42e-05	-	7.85e-06	1.52e-07
Ideno(1,2,3-cd)pyrene	lb/hr	3.48e-06	1.09e-04	3.47e-06	3.46e-06	1.35e-04	3.50e-06	1.50e-04	3.15e-06	4.17e-06	-	-	1.46e-05	9.20e-06	9.85e-06	-	9.60e-06	-	8.71e-06	8.42e-06
Isophorone	lb/hr	3.28e-06	2.89e-06	3.27e-06	3.25e-06	2.68e-06	3.29e-06	3.25e-06	2.96e-06	3.92e-06	-	-	-	-	-	-	-	-	-	2.07e-06
N-Nitrosodiphenylamine	lb/hr	-	6.66e-06	-	-	7.86e-06	-	8.91e-06	-	-	-	-	-	-	-	-	-	-	-	-
Naphthalene	lb/hr	-	5.28e-05	-	-	7.11e-05	-	7.69e-05	-	-	-	-	2.69e-05	2.09e-05	1.16e-05	-	1.13e-05	-	6.23e-06	1.21e-07
Pentachlorphenol	lb/hr	1.01e-05	4.11e-05	1.01e-05	1.00e-05	4.62e-05	1.01e-05	5.30e-05	9.14e-06	1.21e-05	-	-	1.06e-05	1.09e-05	-	-	-	-	-	6.39e-06
Phenanthrene	lb/hr	3.48e-06	8.61e-04	3.47e-06	1.10e-05	1.06e-03	3.50e-06	1.18e-03	3.15e-06	4.17e-06	-	-	1.00e-04	6.27e-05	6.85e-05	-	6.68e-05	-	4.20e-05	1.21e-05
Phenol	lb/hr	-	9.76e-06	-	2.84e-06	9.39e-06	-	9.99e-06	-	4.64e-06	4.64e-06	4.62e-06	8.18e-06	7.34e-06	6.44e-06	4.58e-06	6.60e-06	4.64e-06	8.84e-06	2.10e-08
Pyrene	lb/hr	3.48e-06	5.80e-04	3.47e-06	6.30e-06	7.10e-04	3.50e-06	7.92e-04	3.15e-06	4.17e-06	-	-	7.90e-05	5.85e-05	3.85e-05	-	3.76e-05	-	2.42e-05	8.72e-06
Tributyl phosphate	lb/hr	-	1.76e-04	-	7.88e-05	3.40e-04	-	2.85e-04	-	-	-	-	1.76e-04	-	3.08e-04	-	3.00e-04	-	1.66e-04	3.22e-06
bis(2-Ethylhexyl) phthalate	lb/hr	3.83e-06	1.31e-05	3.82e-06	6.64e-06	1.98e-05	3.85e-06	1.89e-05	6.62e-06	1.02e-05	5.61e-06	9.40e-06	5.14e-05	4.61e-05	1.69e-05	5.54e-06	1.69e-05	5.61e-06	1.72e-05	5.47e-06

Table 2-1
Emissions Estimate for Railcar Loadout and Waste Preparation Building Equipment
(Combustion Emissions for One (1) 162 Horsepower Diesel Engine)

Combustion Pollutant	Emissions	
	(lb/hr)	(tons/yr)
NOx*	2.09	6.26
CO*	0.189	0.566
SOx	0.333	0.999
PM-10*	0.0911	0.273
TSP*	0.0911	0.273
CO2*	202	605
Aldehydes	0.0746	0.224
VOC*	0.0904	0.271
Benzene	0.00106	0.00317
Toluene	0.000464	0.00139
Xylenes	0.000323	0.000970
Radoinuclide Pollutant	**Maximum Emissions (Phase 2) (pCi/hr)**	**Maximum Concentration (Phase 2) (pCi/l)**
Radon-222	3.79E+09	46.4

*Note: The combustion emissions for these pollutants are from vendor supplied emissions test results. The emissions are estimated only for one (1) 162 Horsepower engine. In order to calculate total emissions, the results above must be multiplied by the number of active units of this size present in each building.

1321

1-203

DRAWING NUMBER 773481-M53

1321

000228

FIGURE 1-1

REV.	DATE	BY	CHK'D	APR'VD	DESCRIPTION
B	2/13/98	GSJ	PJI		DRAFT ISSUE FOR EPA REVIEW
A	1/9/98	BAK	PJI		ORIGINAL ISSUE OF DRAFT

FLUOR DANIEL FERNALD

WASTE PITS REMEDIAL ACTION PROJECT (WPRAP)
FERNALD, OHIO
FDF SUBCONTRACT NO. 98SC000001

PROJECT NAME
WASTE PITS REMEDIAL ACTION PROJECT (WPRAP)

TITLE
OVERALL SITE FACILITIES MAP

INTERNATIONAL TECHNOLOGY CORPORATION
... Creating a Safer Tomorrow

DESIGNED BY	PJI	CHECKED BY	PJI	1/9/98	REVISION
DRAWN BY	B. A. KUMPF	APPROVED BY			
DATE	29 DECEMBER 97	DWG. SCALE	1"=80'		B
IT PROJECT NO.	773481	DRAWING NO.	M-00-02-001		

9 FEB 98
10:25 SITECOND
773481m53 02/10/98 8:38am MFL

DRAWING NUMBER 773481-M27

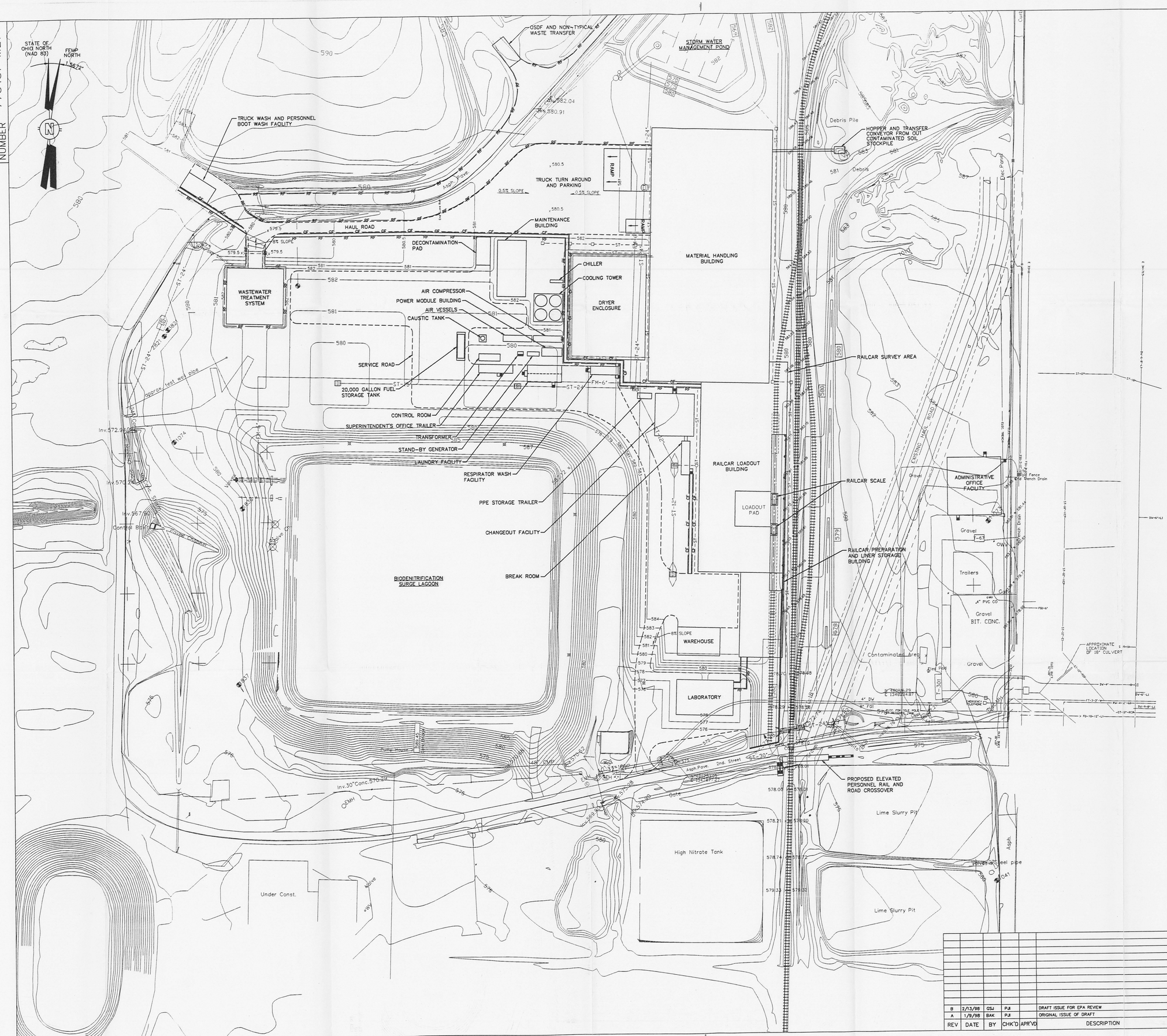

LEGEND:

—CF— CONSTRUCTION FENCE

—RF— RADIOLOGICAL FENCE

000229

SCALE

0 50 100 150 FEET

FIGURE 1-3

REV	DATE	BY	CHK'D	APR'VD	DESCRIPTION
B	2/13/98	GSJ	PJI		DRAFT ISSUE FOR EPA REVIEW
A	1/9/98	BAK	PJI		ORIGINAL ISSUE OF DRAFT

FLUOR DANIEL FERNALD

WASTE PITS REMEDIAL ACTION PROJECT (WPRAP)
FERNALD, OHIO
FDF SUBCONTRACT NO. 98SC000001

PROJECT NAME
WASTE PITS REMEDIAL ACTION PROJECT (WPRAP)

TITLE
SITE FACILITIES LAYOUT

INTERNATIONAL TECHNOLOGY CORPORATION

... Creating a Safer Tomorrow

DESIGNED BY	PJI	CHECKED BY	PJI	1/9/98	REVISION
DRAWN BY	B. A. KUMPF	APPROVED BY			B
DATE	19 DECEMBER 97	DWG. SCALE	1"=50'		
IT PROJECT NO.	773481	DRAWING NO.	M-90-02-001		

FEB 98
BY: NEWTOPO