1-203.13 1423


**Department of Energy**

**Ohio Field Office**
**Fernald Area Office**
P. O. Box 538705
Cincinnati, Ohio 45253-8705
(513) 648-3155


APR 30 1998

DOE-0733-98

Mr. James A. Saric, Remedial Project Manager
U.S. Environmental Protection Agency
Region V-SRF-5J
77 West Jackson Boulevard
Chicago, Illinois 60604-3590

Mr. Tom Schneider, Project Manager
Ohio Environmental Protection Agency
401 East 5th Street
Dayton, Ohio 45402-2911

Dear Mr. Saric and Mr. Schneider:

TRANSMITTAL OF INFORMATION ON CHANGES TO THE IT CORPORATION DESIGN AS REFLECTED IN THE DRAFT REMEDIAL DESIGN DOCUMENTS PACKAGE FOR OPERABLE UNIT 1

Reference: Draft Remedial Design Documents Package for Operable Unit 1, as Developed by IT Corporation, dated March 1998.

As discussed in the April 8, 1998, meeting between the U.S. Environmental Protection Agency (U.S. EPA), Ohio Environmental Protection Agency (OEPA), Department of Energy (DOE), Fluor Daniel Fernald (FDF), and IT Corporation, the IT Corporation has identified various proposed changes to the design represented in Revision B of the Draft Remedial Design (RD) Documents Package. This package was submitted to the U.S. EPA and OEPA for review on March 5, 1998. As agreed during that meeting, a more definitive description of these changes has been developed, and is enclosed along with this letter for your consideration in your review of the RD Documents Package. Along with the description of the changes, revised Process Flow Diagrams (PFD), are also being provided for your review. A crosswalk is also enclosed showing how these PFDs compare with those provided in Volume 1 of the RD Documents Package.

Revisions of pages within the text of the RD Documents Package are not a part of this transmittal. Any other changes to the document to reflect these changes, as well as any comments from the EPAs, will be included in the next revision of the RD Documents Package to be sent to the EPAs.

Recycled and Recyclable

If you have any questions or comments, or to schedule a time to discuss this package, please contact Dave Lojek at (513) 648-3127.

Sincerely,

Johnny Reising

FEMP:Lojek

Johnny W. Reising
Fernald Remedial Action
Project Manager

Enclosure: As Stated

cc w/enc:

N. Hallein, EM-42/CLOV
G. Jablonowski, USEPA-V, SRF-5J
R. Beaumier, TPSS/DERR, OEPA-Columbus
T. Schneider, OEPA-Dayton (3 copies total of enc.)
F. Bell, ATSDR
M. Schupe, HSI GeoTrans
R. Vandegrift, ODH
F. Barker, Tetra-Tech
AR Coordinator, FDF/78

cc w/o enc:

A. Tanner, DOE-FEMP
D. Carr, FDF/52-2
R. Fellman, FDF/52-1
T. Hagen, FDF/65-2
J. Harmon, FDF/90
R. Heck, FDF/2
S. Hinnefeld, FDF/2
EDC, FDF/52-7

# CHANGES TO THE OU1 DRAFT REMEDIAL DESIGN DOCUMENT

The design submitted to the EPAs as a part of Revision B of the Draft OU1 Remedial Design (RD) Documents Package featured a wet gas cleaning system and optional elements such as a chiller and thermal oxidizer to accommodate volatile organics in the off gas system. During March 1998, IT conducted bench scale and pilot scale plant testing of Waste Pit materials provided by FDF, from FEMP archives, to verify various aspects of the design.

The results of these tests have confirmed the ability of Indirect Fired Thermal Drying technology to dry the Waste Pit materials and that volatile organic compounds are liberated during the drying process which require treatment in the Gas Cleaning System. During the course of these tests, IT analyzed and quantified the Total Organic Carbon (TOC) in the Waste Pit material and additionally quantified the amount of organics that were evolved in the drying process. As a result of this work, the Process Flow Diagrams have been revised to reflect the results of these tests and process improvements have been made to accommodate the testing data, and are attached to this document.

Based on preliminary results from the recent design verification testing, the anticipated carbon monoxide (CO) and total hydrocarbon (THC) generation from dryers will be 10lb/hr CO, 18lb/hr THC (non-condensibles), and 16lb/hr of THC (condensibles). The CO value is greater than values assumed during the initial process design as provided in Rev. B of the RD Documents Package.

The data also reveals that the condensible and non-condensible hydrocarbons are generated from the dryers at an approximately even split (50% condensible/50% non-condensible).

The following process design changes have been made based on the results of design verification testing:

1) **Deletion of optional chiller**

In Rev. B of the RD Documents Package, an "optional" chiller (item Z-5001) was included to cool dryer off-gases to approximately 40 Degrees Fahrenheit condensing the heavy or condensible hydrocarbons (see PFD D-50-10-001, Rev. B, of Volume 1 of 3). Even though the chiller can condense the heavier hydrocarbon compounds, it is not effective in condensing the light hydrocarbons which testing shows will be present in the dryer off-gas stream. For this reason the optional chiller has been deleted. Dryer off-gases will be sub-cooled to a nominal 100 Degrees Fahrenheit using sub-cooling contact sprays (items E-5002A, B) to remove condensible hydrocarbons (see PFD D-50-10-001, Rev. D, attached).

2) **Addition of optional thermal oxidizer and deletion of carbon bed absorber:**

In Rev. B of the RD Documents Package, a carbon absorber (S-5006) and an "optional" thermal oxidizer (F-5001) were included to remove non-condensible hydrocarbons from the dryer off-gas stream (see Section 2.6 of the Description of Operation and Processes and PFD D-50-10-001 of Volume 1 of 3). Carbon bed absorbers are effective in removing heavier hydrocarbons but are not effective in removing very light hydrocarbons and carbon monoxide (CO) which testing shows

will be present in the dryer off-gas stream. For this reason the carbon bed absorber has been deleted. The thermal oxidizer is no longer optional and is included in the system because of its effectiveness in removal of carbon monoxide (CO) and total hydrocarbons (THC).

The gases exiting the thermal oxidizer at 1600 degrees Fahrenheit are directed to the stack and then discharged to the atmosphere hot. The hot gases inherently provide for greater enhanced dispersion and minimized ground level concentrations of any flue gas constituent as compared to the relatively cool 120 degree Fahrenheit exhaust initially projected.

3) **Addition of inert gas purge to dryer**

The design verification test has indicated that significant non-condensible organic vapors will be present in the dryer off-gas stream. These organic vapors pose a potential explosion hazard if lower explosive limit concentrations are approached inside the WESP. An inert gas purge system (see PFD D-20-10-002, Rev. D, Stream 201) has been added to control the oxygen concentration in the dryer off-gas to less than eight percent.

4) **Gas Cleaning System blowdown directed to Clarifiers/Filters in lieu of hydroclones:**

Rev. B of the RD Documents Package incorporated hydroclones (see PFD D-60-10-001, Rev. B) to remove only solids from the gas cleaning system blowdown. Based on the design verification testing, both free phase and soluble organics will be present in the gas cleaning system blowdown stream along with particulate solids. The revised design includes a primary and secondary clarifier, and dual sand/bag filters (see PFD D-60-10-001, Rev. D). The clarifiers will handle the removal of free phase organics as well as solids versus the hydroclone capability of handling only solids separation. Additionally, a filter press will be required to handle clarifier sludge dewatering requirements.

<u>Other Process Changes</u>

The following process improvements have been made to enhance system simplicity, reliability, safety, constructibility and operational flexibility.

5) **Dual Dryer Configuration versus Single Dryer:**

In Rev. B of the RD Documents Package, a single, large dryer nine feet by 60 feet long (heated length) was included (see PFD D-20-10-001, Rev. B). Based upon vendor responses, the new design includes a dual-dryer (7.5 feet in diameter by 46 feet heated length) configuration which will improve process reliability with out impacting the single train Gas cleaning system. These dryers are depicted on the following two PFDs: D-20-10-001 & -002, Rev. D.

Separate dryer feed and product handling systems are used for each dryer. A 46 foot heated shell length will have considerably less thermal stress than a 60 feet long heated shell. These benefits are realized with out impacting the overall soil processing capacity, or moisture evaporative capacity.

6) **Elimination of Sweep gas/Recuperative heater:**

In Rev. B of the RD Documents Package, a 3000 ACFM sweep air rate to drive the water vapor and volatiles from the dryer into the gas cleaning system was assumed (see PFD D-20-10-001, Rev. B, Stream 205). Based on operating experience with a similar process, sweep gas is not required for this purpose. The forced continuous sweep air has therefore been deleted. Normal infiltration air rates combined with inert purge gas will be used as the design basis. An infiltration air leakage rate is assumed based on actual operational conditions from a similar process.

The system initially included a recuperative heater (see PFD D-20-10-001, Rev. B, item E-2001) to improve overall energy efficiency of the drying system. Utilizing the dual dryer configuration, the maximum thermal input required to both dryers and the thermal oxidizer is within the proposed natural gas usage levels without the use of a recuperative heater. Elimination of the recuperative heater also simplifies the system design.

7) **Elimination of dual fuel firing:**

In Rev. B of the RD Documents Package, provisions were made for fuel oil firing on the dryer burners (see PFD D-20-10-001, Rev. B, Streams 202 and 203). Several factors involved with fuel firing such as corrosion and fouling of external drum surfaces, soot deposition, NOx and SOx emissions, and piping complexities of multiple burner configurations have led to the deletion of the fuel oil firing provision.

8) **Deletion of the Venturi Scrubber**

In Rev. B of the RD Documents Package, a venturi scrubber (see PFD D-50-10-001, Rev. B, item S-5002) was included upstream of a contact scrubber. The purpose of the venturi scrubber was to enhance particulate removal prior to the contact scrubber to reduce the potential for fouling of the contact scrubber internal packing.

The revised gas cleaning system design is based on operating experience with a similar process and provides for particulate removal in a two-stage scrubber/subcool quench without effecting the operation of the WESP and HEPA filters.

9) **HEPA filter moved to the suction side of the induced draft (ID) fan:**

In Rev. B of the RD Documents Package, the HEPA filters were shown to be downstream of the ID fan (see PFD D-50-10-001, Rev. B). This location was initially chosen to minimize pressure on the filter housing. Elimination of the venturi scrubber has reduced the vacuum upstream of the ID fan sufficient to allow placement of the HEPA filters in this position. It is preferred to operate the HEPAs at a slight negative pressure to minimize the potential for fugitive emissions from filters. The design has been improved from an ALARA standpoint.

10) **Deletion of the mist eliminators:**

A dual mist eliminator was included in Rev. B of the RD Documents Package, to reduce the particulate/moisture droplet loading to the WESP (see PFD D-50-10-001,

Rev. B, item S-5003). The revised design incorporates a WESP unit that is sized to handle the particulate/droplet loadings without the need for a mist elimination step. The mist eliminators provided no additional process benefit and would be susceptible to plugging. The mist eliminators have been deleted.



6

## PFD Drawing List Crosswalk

| Rev. B (Submitted with RD Package on 3/5/98) | | Rev. D (Attached to this Letter) | | |
|---|---|---|---|---|
| Drawing No. | Description | Drawing No. | Description | Comments |
| D-10-10-001 | Area 10 - Dryer Feed System PFD | | | Combined in Rev. D with D-20-10-001 & 002 Drawings |
| D-15-10-001 | Area 15 - Material Handling PFD | D-15-10-001 | Area 15 - Material Handling PFD | |
| D-20-10-001 | Area 20 - Indirect Dryer PFD | D-20-10-001 | Areas 10, 20, & 30 - Waste Feed, Indirect Dryer & Product Handling PFD | A separate PFD is included for each of the dryers. PFD now also includes dryer feed system previously included in D-10-10-001. |
| | | D20-10-002 | | |
| D-35-10-001 | Area 35 - Railcar Loading/Lidding PFD | D-35-10-001 | Area 35 - Railcar Loading/Lidding PFD | |
| D-50-10-001 | Area 50 - Air Pollution Control System PFD | D-50-10-001 | Area 50 - Air Pollution Control System PFDs | Drawing was split in Rev. D |
| | | D-50-10-002 | | |
| D-60-10-001 | Area 60 - Process Blowdown Pretreatment System | D-60-10-001 | Area 60 - Process Blowdown Pretreatment System | |
| D-65-10-001 | Area 65 - Wastewater Treatment System (WTS) PFD | D-65-10-001 | Area 65 - Wastewater Treatment System (WTS) PFD | |
| D-70-10-001 | Area 70 - Utilities PFD | D-70-10-001 | Area 70 - Utilities PFD | |
| D-90-10-001 | Area 90 - Site Water Balance PFD | D-90-10-001 | Area 90 - Site Water Balance PFD | |

DRAWING NUMBER D-15-10-001

1423

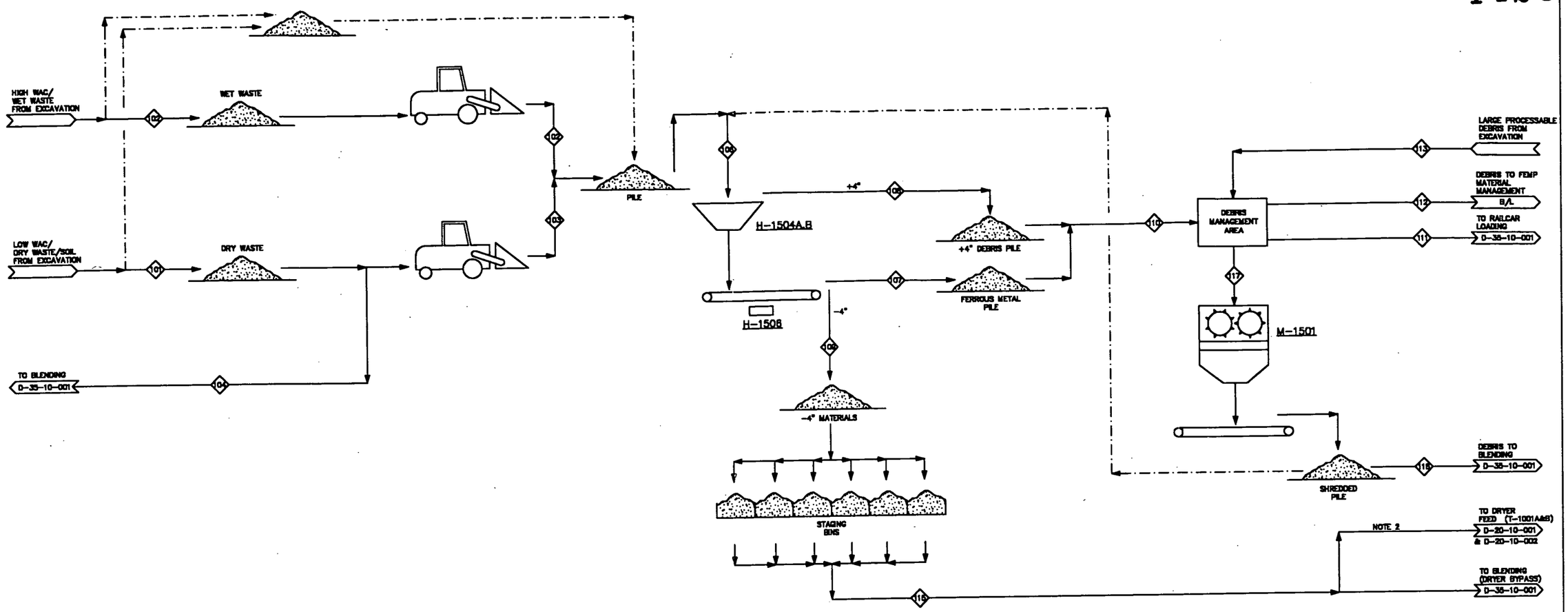


H-1504A,B 4" VIBRATOR SCREEN

P-1502A,B SUMP PUMPS

H-1506 MAGNETIC SEPARATOR

M-1501 DEBRIS SHREDDER

| COMPONENT \ STREAM NO. | | 101 (NOTE 1) LOW WAC WASTE FROM EXCAVATION | 102 (NOTE 1) HIGH WAC WASTE FROM EXCAVATION | 103 WASTE TO SIZE REDUCTION | 104 WASTE TO BLENDING | 105 WASTE TO SCREEN | 107 FERROUS METAL | 108 OVERSIZE | 109 -4" | 110 DEBRIS | 111 DEBRIS TO LOADER | 112 DEBRIS TO FDF | 113 LARGE DEBRIS FROM EXCAVATION | 115 SOLIDS TO DRYER | 117 MATERIAL TO SHREDDER | 118 DEBRIS TO BLENDING |
|---|---|---|---|---|---|---|---|---|---|---|---|---|---|---|---|---|
| AVERAGE CONDITION | | | | | | | | | | | | | | | | |
| $H_2O$ | LB/HR | | | | | | | | | | | | | 18,320 | | |
| SOIL/PARTICULATE | LB/HR | | | | | | | | | | | | | 25,190 | | |
| ORGANICS | LB/HR | | | | | | | | | | | | | 2,290 | | |
| TOTAL MASS FLOW | LB/HR | | | | | | | | | | | | | 45,800 | | |
| VOLUMETRIC FLOW | ACFM (GPM) [$YD^3$] | | | | | | | | | | | | | | | |
| TEMPERATURE | °F | AMB | AMB | AMB | AMB | AMB | AMB | AMB | AMB | AMB | AMB | AMB | AMB | 60 | | |
| PRESSURE | IN. W.C. (PSI) | | | | | | | | | | | | | ATM | | |
| ENTHALPY | MM BTU/HR | | | | | | | | | | | | | | | |

NOTES:

1. QUANTITY VARIES BY PHASE – SEE EXCAVATION PLAN.
2. STREAM 115 FEEDS TWO THERMAL DRYER UNITS (TDU) EQUALLY DISTRIBUTED AS STREAM 116 ON D-20-10-001 AND D-20-10-002.

**PRELIMINARY**
**NOT FOR CONSTRUCTION**

| REV | DATE | BY | CHK'D | APR'VD | DESCRIPTION |
|---|---|---|---|---|---|
| D | 4/29/98 | SLT | CDB | JN | CFC DRAFT |
| B | 1/23/98 | JWH | DDP | CP | ISSUED FOR DESIGN |
| A | 12/31/97 | JWH | | | ISSUED FOR DRAFT PLANT FACILITIES ENG. PKG. |

FLUOR DANIEL FERNALD

WASTE PITS REMEDIAL ACTION PROJECT (WPRAP)
FERNALD, OHIO
FDF SUBCONTRACT NO. 985C000001

PROJECT NAME
WASTE PITS REMEDIAL ACTION PROJECT (WPRAP)

TITLE
AREA 15
PROCESS FLOW DIAGRAM
MATERIAL HANDLING

INTERNATIONAL TECHNOLOGY CORPORATION

8

... Creating a Safer Tomorrow

| | | | | |
|---|---|---|---|---|
| DESIGNED BY | DDP | CHECKED BY | DDP | REVISION |
| DRAWN BY | JWH | APPROVED BY | CP | D |
| DATE | 12/31/97 | DWG. SCALE | NONE | |
| IT PROJECT NO. | 773481 | DRAWING NO. | D-15-10-001 | |

G:\PROJECT\40000\15\1001-D

DRAWING NUMBER D-20-10-001



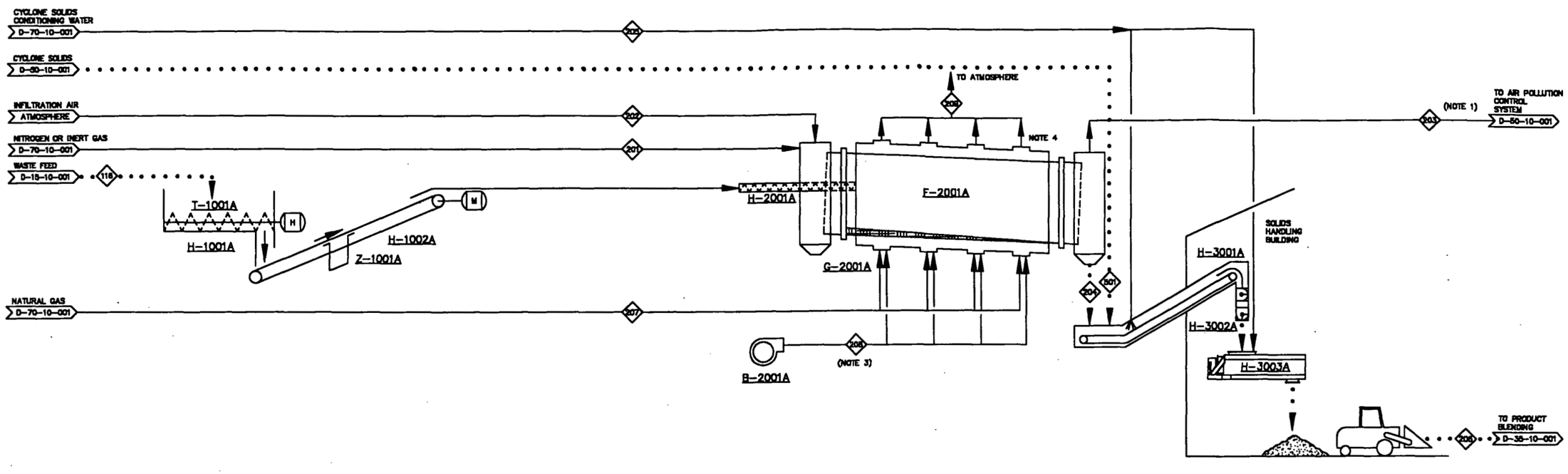


**T-1001A** LIVE BOTTOM HOPPER

**H-1001A** MASS FLOW SCREW FEEDER

**Z-1001A** BELT SCALE

**H-1002A** BELT FEED CONVEYOR

**H-2001A** FEED DUAL SCREW

**B-2001A** COMBUSTION AIR FAN

**G-2001A** DRYER BURNERS

**F-2001A** ROTARY DRYER

**H-3001A** DRAG FLIGHT CONVEYOR

**H-3002A** DOUBLE DUMP VALVE

**H-3003A** PUGMILL

| STREAM NO. / COMPONENT | | 116 SOLIDS FEED TO DRYER | 201 NITROGEN PURGE | 202 AIR LEAKAGE | 203 DRYER EXHAUST GAS | 204 DRYER SOLIDS | 205 CYCLONE SOLIDS CONDITIONING WATER | 206 DRYER RESIDUALS TO PRODUCT BLENDING | 207 DRYER BURNER FUEL | 208 DRYER BURNER COMBUSTION AIR | 209 DRYER SHELL EXHAUST GAS | 501 CYCLONE SOLIDS PER UNIT |
|---|---|---|---|---|---|---|---|---|---|---|---|---|
| CARBON | LB/HR | | | | | | | | 761 | | | |
| HYDROGEN | LB/HR | | | | | | | | 245 | | | |
| CO2 | LB/HR | | | | | | | | | | 2,753 | |
| O2 | LB/HR | | | 78 | 78 | | | | | 4,738 | 790 | |
| N2 | LB/HR | | 760 | 259 | 1,020 | | | | 30 | 15,729 | 15,759 | |
| H2O | LB/HR | 9,200 | | 3 | 7,824 | 1,378 | 65 | 1,447 | | 159 | 2,351 | |
| SOIL/PARTICULATE | LB/HR | 13,782 | | | 1,378 | 12,403 | | 13,024 | | | | 820 |
| VOLATILE ORGANICS | LB/HR | 18 | | | 18 | | | | | | | |
| TOTAL MASS FLOW | LB/HR | 23,000 | 760 | 340 | 10,319 | 13,782 | 65 | 14,471 | 1,026 | 20,626 | 21,653 | 820 |
| VOLUMETRIC FLOW | ACFM | | 175 | 76 | 4,695 | | | | | 4,335 | 17,659 | |
| LIQUID FLOW | GPM | | | | | | 0.2 | | | | | |
| TEMPERATURE | °F | 70 | 70 | 70 | 350 | 175 | 60 | 175 | 70 | 70 | 1400 | 345 |
| PRESSURE | IN. W.C. (PSI) | | 407.6 | 407.6 | 406.6 | | | | | 435.6 | 407.6 | |
| ENTHALPY | MM BTU/HR | 0.1 | 0.0 | 0.0 | 9.4 | 0.5 | | 0.5 | 22.4 | 0.2 | 10.6 | 0.0 |

1. DRYER OFF-GAS FLOW AND TEMPERATURE MAY VARY DURING OPERATION. FLOWS AND TEMPERATURES PROVIDED SHOULD BE CONSIDERED TO BE AVERAGE. SPIKES OF ±100° F AND ±20% OF FLOW WILL BE COMMON DURING ACTUAL OPERATION.
2. THE FLOWS ARE BASED ON NORMAL AVERAGE AT 100% OPERATING FACTOR.
3. TOTAL TO FOUR ZONES
4. DYRER FURNACE EXHAUSTS THROUGH FOUR VENTS TO ATMOSPHERE
5. ALL FLOWS ARE FOR SINGLE DRYER

**PRELIMINARY**
**NOT FOR CONSTRUCTION**

| REV | DATE | BY | CHK'D | APR'VD | DESCRIPTION |
|---|---|---|---|---|---|
| 0 | 4/28/98 | SLT | CDB | JN | CFC DRAFT |

FLUOR DANIEL FERNALD

WASTE PITS REMEDIAL ACTION PROJECT (WPRAP)
FERNALD, OHIO
FDF SUBCONTRACT NO. 9850000001

PROJECT NAME: WASTE PITS REMEDIAL ACTION PROJECT (WPRAP)

TITLE: AREAS 10, 20 & 30
WASTE FEED, INDIRECT DRYER
& PRODUCT HANDLING
PROCESS FLOW DIAGRAMS

INTERNATIONAL TECHNOLOGY CORPORATION
... *Creating a Safer Tomorrow*

9

| | | | | |
|---|---|---|---|---|
| DESIGNED BY | PA | CHECKED BY | CDB | REVISION |
| DRAWN BY | SLT | APPROVED BY | | D |
| DATE | 4/22/98 | DWG. SCALE | NONE | |
| IT PROJECT NO. | 773481 | DRAWING NO. | D-20-10-001 | |

Q:\PROJECTS\40000\20\1001-0

DRAWING NUMBER D-20-10-002

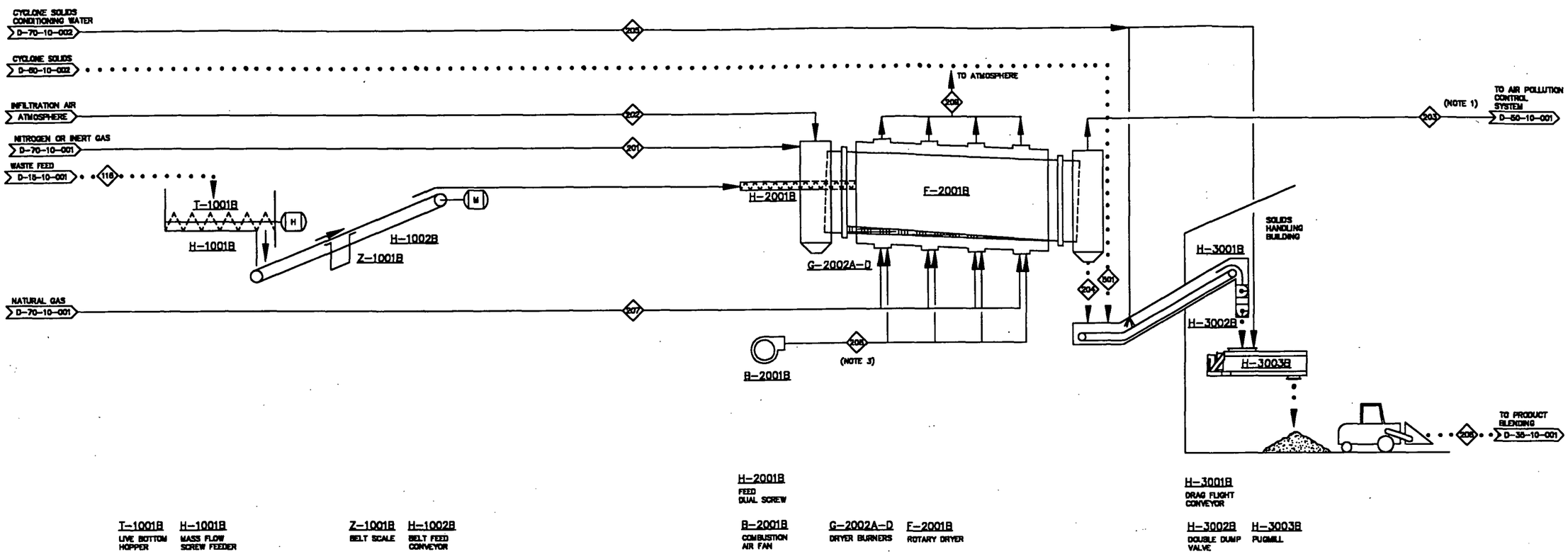


**T-1001B** LIVE BOTTOM HOPPER
**H-1001B** MASS FLOW SCREW FEEDER
**Z-1001B** BELT SCALE
**H-1002B** BELT FEED CONVEYOR
**H-2001B** FEED DUAL SCREW
**B-2001B** COMBUSTION AIR FAN
**G-2002A-D** DRYER BURNERS
**F-2001B** ROTARY DRYER
**H-3001B** DRAG FLIGHT CONVEYOR
**H-3002B** DOUBLE DUMP VALVE
**H-3003B** PUGMILL

| STREAM NO. / COMPONENT | | 116 SOLIDS FEED TO DRYER | 201 NITROGEN PURGE | 202 AIR LEAKAGE | 203 DRYER EXHAUST GAS | 204 DRYER SOLIDS | 205 CYCLONE SOLIDS CONDITIONING WATER | 206 DRYER* RESIDUALS TO PRODUCT BLENDING | 207 DRYER BURNER FUEL | 208 DRYER BURNER COMBUSTION AIR | 209 DRYER SHELL EXHAUST GAS | 501 CYCLONE SOLIDS PER UNIT |
|---|---|---|---|---|---|---|---|---|---|---|---|---|
| CARBON | LB/HR | | | | | | | | 791 | | | |
| HYDROGEN | LB/HR | | | | | | | | 245 | | | |
| CO2 | LB/HR | | | | | | | | | | 2,753 | |
| O2 | LB/HR | | | 78 | 78 | | | | | 4,736 | 790 | |
| N2 | LB/HR | | 790 | 259 | 1,020 | | | | 30 | 15,729 | 15,759 | |
| H2O | LB/HR | 9,200 | | 3 | 7,824 | 1,376 | 85 | 1,447 | | 159 | 2,351 | |
| SOIL/PARTICULATE | LB/HR | 13,782 | | | 1,378 | 12,403 | | 13,024 | | | | 620 |
| VOLATILE ORGANICS | LB/HR | 18 | | | 18 | | | | | | | |
| TOTAL MASS FLOW | LB/HR | 23,000 | 790 | 340 | 10,319 | 13,782 | 85 | 14,471 | 1,026 | 20,626 | 21,653 | 620 |
| VOLUMETRIC FLOW | ACFM | | 175 | 79 | 4,685 | | | | | 4,335 | 17,656 | |
| LIQUID FLOW | GPM | | | | | | 0.2 | | | | | |
| TEMPERATURE | °F | 70 | 70 | 70 | 350 | 175 | 60 | 175 | 70 | 70 | 1400 | 345 |
| PRESSURE | IN. W.C. (PSI) | | 407.6 | 407.6 | 406.6 | | | | | 435.6 | 407.6 | |
| ENTHALPY | MM BTU/HR | 0.1 | 0.0 | 0.0 | 9.4 | 0.5 | | 0.5 | 22.4 | 0.2 | 10.8 | 0.0 |

1. DRYER OFF-GAS FLOW AND TEMPERATURE MAY VARY DURING OPERATION. FLOWS AND TEMPERATURES PROVIDED SHOULD BE CONSIDERED TO BE AVERAGE. SPIKES OF ±100° F AND ±20% OF FLOW WILL BE COMMON DURING ACTUAL OPERATION.
2. THE FLOWS ARE BASED ON NORMAL AVERAGE AT 100% OPERATING FACTOR.
3. TOTAL TO FOUR ZONES
4. DRYER FURNACE EXHAUSTS THROUGH VENTS TO ATMOSPHERE
5. ALL FLOWS ARE FOR SINGLE DRYER.

**PRELIMINARY**
**NOT FOR CONSTRUCTION**

| REV | DATE | BY | CHK'D | APR'VD | DESCRIPTION |
|---|---|---|---|---|---|
| D | 4/22/96 | SLT | CDB | JN | CFC DRAFT |

FLUOR DANIEL FERNALD
WASTE PITS REMEDIAL ACTION PROJECT (WPRAP)
FERNALD, OHIO
FDF SUBCONTRACT NO. 98SC000001

PROJECT NAME: WASTE PITS REMEDIAL ACTION PROJECT (WPRAP)

TITLE: AREAS 10, 20 & 30
WASTE FEED, INDIRECT DRYER
& PRODUCT HANDLING
PROCESS FLOW DIAGRAMS

INTERNATIONAL TECHNOLOGY CORPORATION
... *Creating a Safer Tomorrow*

10

| | | | | |
|---|---|---|---|---|
| DESIGNED BY | PA | CHECKED BY | CDB | REVISION |
| DRAWN BY | SLT | APPROVED BY | | D |
| DATE | 4/22/96 | DWG. SCALE | NONE | |
| IT PROJECT NO. | 773481 | DRAWING NO. | D-20-10-002 | |

G:\PROJECTS\40000\20\1002-D

DRAWING NUMBER D-35-10-001

1423

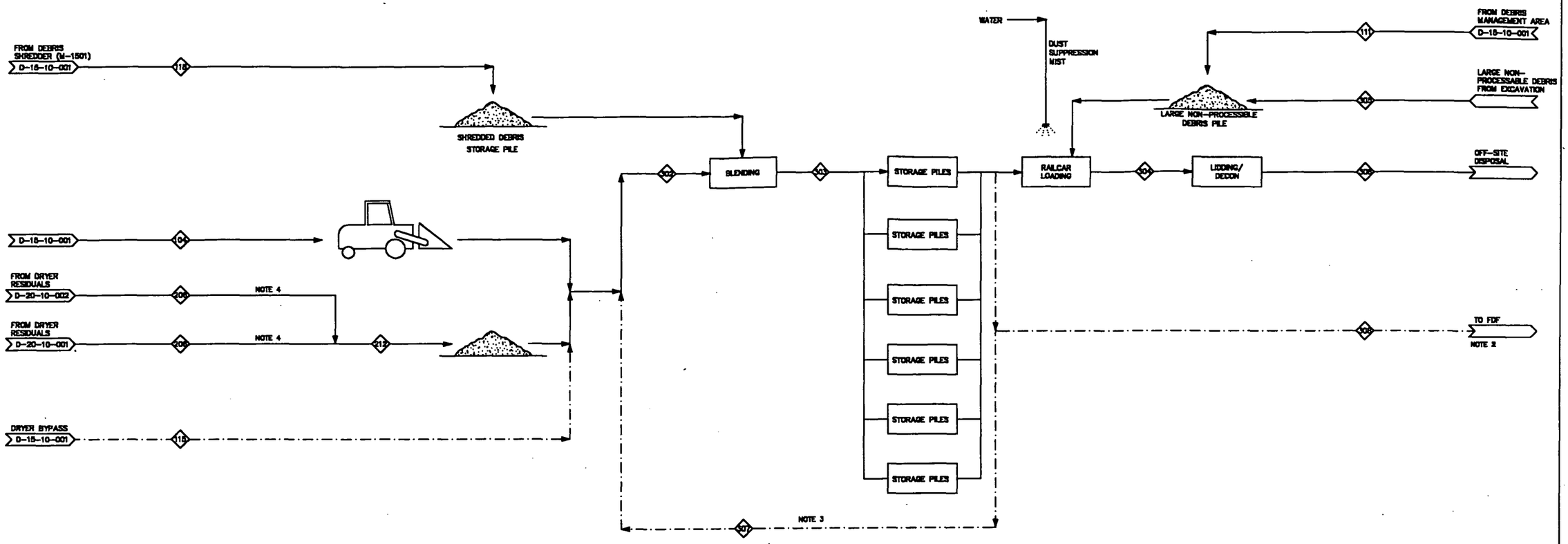


| STREAM NO. / COMPONENT | | 104 NON-DRIED WASTE FOR BLENDING | 111 LARGE NON-PROCESSIBLE WASTE FROM WASTE PROCESSING | 115 DRYER BYPASS MATERIAL | 116 SHREDDED MATERIAL | 212 DRIED WASTE | 302 WASTE TO BLENDING | 303 BLENDED WASTE | 304 RAILCAR LOADOUT | 305 NON-PROCESSIBLE WASTE FROM EXCAVATION | 308 WASTE TO FCDF |
|---|---|---|---|---|---|---|---|---|---|---|---|
| AVERAGE CONDITION | | | | | | | | | | | |
| $H_2O$ | LB/HR | | | | | 2,894 | | | | | |
| SOIL/PARTICULATE | LB/HR | | | | | 26,048 | | | | | |
| ORGANICS | LB/HR | | | | | | | | | | |
| TOTAL MASS FLOW | LB/HR | | | | | 28,942 | | | | | |
| VOLUMETRIC FLOW | ACFM (GPM) | | | | | | | | | | |
| TEMPERATURE | °F | AMB | | AMB | | 175 | | | | | |
| PRESSURE | IN. W.C. (PSI) | | | | | | | | | | |
| ENTHALPY | MM BTU/HR | | | | | | | | | | |
| CARS/DAY | AVG/MAX | | | | | | | | 6/8 | | 6/8 |

NOTE 1 NOTE 1

NOTES:

1. VARIES WITH PHASE – SEE EXCAVATION PLAN.
2. IN THE UNLIKELY EVENT THAT SAMPLING AND ANALYSIS INDICATES RCRA CHARACTERISTIC WASTE IT WILL BE TURNED OVER TO FDF.
3. IN THE UNLIKELY EVENT THAT SAMPLING AND ANALYSIS INDICATES WASTE IN A STORAGE BIN DOES NOT MEET CDF WAC FOR MOISTURE OR RADIONUCLIDES IT WILL BE REBLENDED.
4. STREAM 206 FROM EACH DRYER ARE COMBINED AS STREAM 212.

**PRELIMINARY**
**NOT FOR CONSTRUCTION**

| REV | DATE | BY | CHK'D | APPR'D | DESCRIPTION |
|---|---|---|---|---|---|
| D | 4/28/98 | S.T | CDS | JH | CFC DRAFT |
| B | 1/23/98 | JRH | JLF | CP | ISSUED FOR DESIGN |
| A | 12/31/97 | JRH | | CP | ISSUED FOR DRAFT PLANT FACILITIES ENG. PKG. |

FLUOR DANIEL FERNALD
WASTE PITS REMEDIAL ACTION PROJECT (WPRAP)
FERNALD, OHIO
FDF SUBCONTRACT NO. 9830000001

PROJECT NAME: WASTE PITS REMEDIAL ACTION PROJECT (WPRAP)

TITLE: AREA 35 PROCESS FLOW DIAGRAM RAILCAR LOADING/LIDDING

INTERNATIONAL TECHNOLOGY CORPORATION
... *Creating a Safer Tomorrow*

| | | | | | |
|---|---|---|---|---|---|
| DESIGNED BY | | CHECKED BY | | | REVISION |
| DRAWN BY | JRH | APPROVED BY | CP | | D |
| DATE | 12/31/97 | DWG. SCALE | NONE | | |
| IT PROJECT NO. | 773481 | DRAWING NO. | D-35-10-001 | | |

G:\PROJECT\40000\35\1001-D

DRAWING NUMBER D-50-10-001

1423

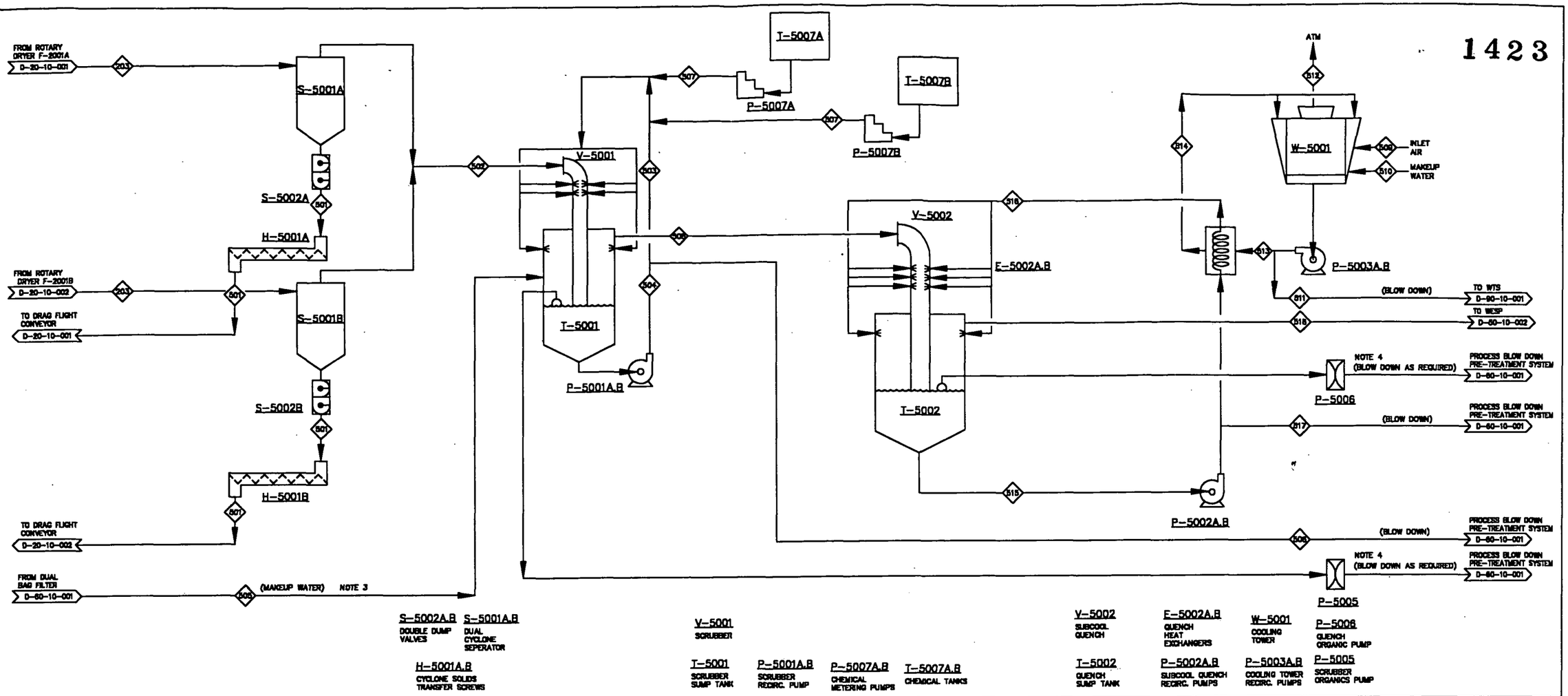


**S-5002A,B** DOUBLE DUMP VALVES
**S-5001A,B** DUAL CYCLONE SEPERATOR
**H-5001A,B** CYCLONE SOLIDS TRANSFER SCREWS
**V-5001** SCRUBBER
**T-5001** SCRUBBER SUMP TANK
**P-5001A,B** SCRUBBER RECIRC. PUMP
**P-5007A,B** CHEMICAL METERING PUMPS
**T-5007A,B** CHEMICAL TANKS
**V-5002** SUBCOOL QUENCH
**T-5002** QUENCH SUMP TANK
**E-5002A,B** QUENCH HEAT EXCHANGERS
**P-5002A,B** SUBCOOL QUENCH RECIRC. PUMPS
**W-5001** COOLING TOWER
**P-5003A,B** COOLING TOWER RECIRC. PUMPS
**P-5006** QUENCH ORGANIC PUMP
**P-5005** SCRUBBER ORGANICS PUMP

| COMPONENT \ STREAM NO. | | 501 | 502 | 503 | 504 | 505 | 506 | 507 | 508 | 509 | 510 | 511 | 512 | 513 | 514 | 515 | 516 | 517 | 518 |
|---|---|---|---|---|---|---|---|---|---|---|---|---|---|---|---|---|---|---|---|
| | | CYCLONE SOLIDS PER UNIT | COMBINED CYCLONE EXHAUST GAS | SCRUBBER RECYCLE FLOW INLET | SCRUBBER RECYCLE FLOW OUTLET | SCRUBBER MAKEUP WATER | SCRUBBER BLOWDOWN | SCRUBBER CHEMICAL INJECTION | SCRUBBER EXHAUST GAS | INLET COOLING AIR | COOLING TOWER MAKEUP WATER | COOLING TOWER BLOWDOWN | COOLING TOWER EXHAUST GAS | COOLING TOWER RECYCLE OUTLET | COOLING TOWER RECYCLE INLET | SUBCOOLING QUENCH RECYCLE OUTLET | SUBCOOLING QUENCH RECYCLE FLOW INLET | SUBCOOLING QUENCH BLOWDOWN | SUBCOOLING QUENCH EXHAUST GAS |
| CARBON | LB/HR | | | | | | | | | | | | | | | | | | |
| HYDROGEN | LB/HR | | | | | | | | | | | | | | | | | | |
| CO2 | LB/HR | | | | | | | | | | | | | | | | | | |
| O2 | LB/HR | | 156 | | | | | | 156 | 109,110 | | | 109,110 | | | | | | 156 |
| N2 | LB/HR | | 2,039 | | | | | | 2,039 | 382,207 | | | 382,207 | | | | | | 2,039 |
| H2O | LB/HR | | 15,649 | 75,000 | 100,345 | 25,000 | 25,345 | | 15,304 | 9,178 | 16,072 | 6,000 | 22,251 | 900,000 | 900,000 | 815,204 | 900,000 | 15,204 | 100 |
| SOIL/PARTICULATE | LB/HR | 620 | 1,616 | | 1,364 | | 1,364 | | 152 | | | | | | | 144 | | 144 | 8 |
| VOLATILE ORGANICS | LB/HR | | 37 | | | | | | 37 | | | | | | | 15 | | 15 | 22 |
| TOTAL MASS FLOW | LB/HR | 620 | 19,397 | 75,000 | 101,709 | 25,000 | 26,709 | | 17,685 | 480,495 | 16,072 | 6,000 | 493,567 | 900,000 | 900,000 | 815,362 | 900,000 | 15,362 | 2,325 |
| VOLUMETRIC FLOW | ACFM | | 9,362 | | | | | | 7,670 | 111,729 | | | 120,421 | | | | | | 560 |
| LIQUID FLOW | GPM | | | 150 | 201 | 50 | 53 | | | | 36 | 10 | | 1,800 | 1,800 | 1,630 | 1,800 | 30 | |
| TEMPERATURE | °F | 345 | 345 | 207 | 207 | 150 | 207 | 80 | 207 | 85 | 80 | 85 | 103 | 85 | 103 | 110 | 90 | 110 | 100 |
| PRESSURE | IN. W.C. (PSI) | | -4.5 | | | | | | -7.5 | | | | | | | | | | -10.5 |
| ENTHALPY | MM BTU/HR | 0.0 | 18.7 | 11.0 | 14.6 | 2.3 | 3.6 | | 17.2 | 12.7 | | 0.1 | 29.0 | 22.5 | 38.8 | 41.1 | 24.0 | 0.8 | 0.1 |

NOTES:
1. THE FLOWS ARE BASED ON NORMAL, AVERAGE AT 100% OPERATING FACTOR.
2. WTS (WATER TREATMENT SYSTEM.)
3. PROCESS MAKEUP WATER IS TREATED RECYCLE FROM PROCESS BLOWDOWN PRETREATMENT SYSTEM.
4. INTERMITTENT BLOWDOWN RATE IS A NOMINAL 20 GPM.

**PRELIMINARY**
**NOT FOR CONSTRUCTION**

| REV | DATE | DWE | RAS | JN | APW'ND | DESCRIPTION |
|---|---|---|---|---|---|---|
| D | 4/29/96 | DWE | RAS | JN | | CFC DRAFT |

FLUOR DANIEL FERNALD
WASTE PITS REMEDIAL ACTION PROJECT (WPRAP)
FERNALD, OHIO
FDF SUBCONTRACT NO. 68SC000001

PROJECT NAME: WASTE PITS REMEDIAL ACTION PROJECT (WPRAP)

TITLE: AREA 50
AIR POLLUTION CONTROL SYSTEM
PROCESS FLOW DIAGRAM

INTERNATIONAL TECHNOLOGY CORPORATION
... *Creating a Safer Tomorrow*

12

| | | | | |
|---|---|---|---|---|
| DESIGNED BY | PA | CHECKED BY | COB | REVISION |
| DRAWN BY | SLT | APPROVED BY | | D |
| DATE | 4/22/96 | DWG. SCALE | NONE | |
| IT PROJECT NO. | 773481 | DRAWING NO. | D-50-10-001 | |

G:\PROJECT\40000\50\1001-D

DRAWING NUMBER D-50-10-002

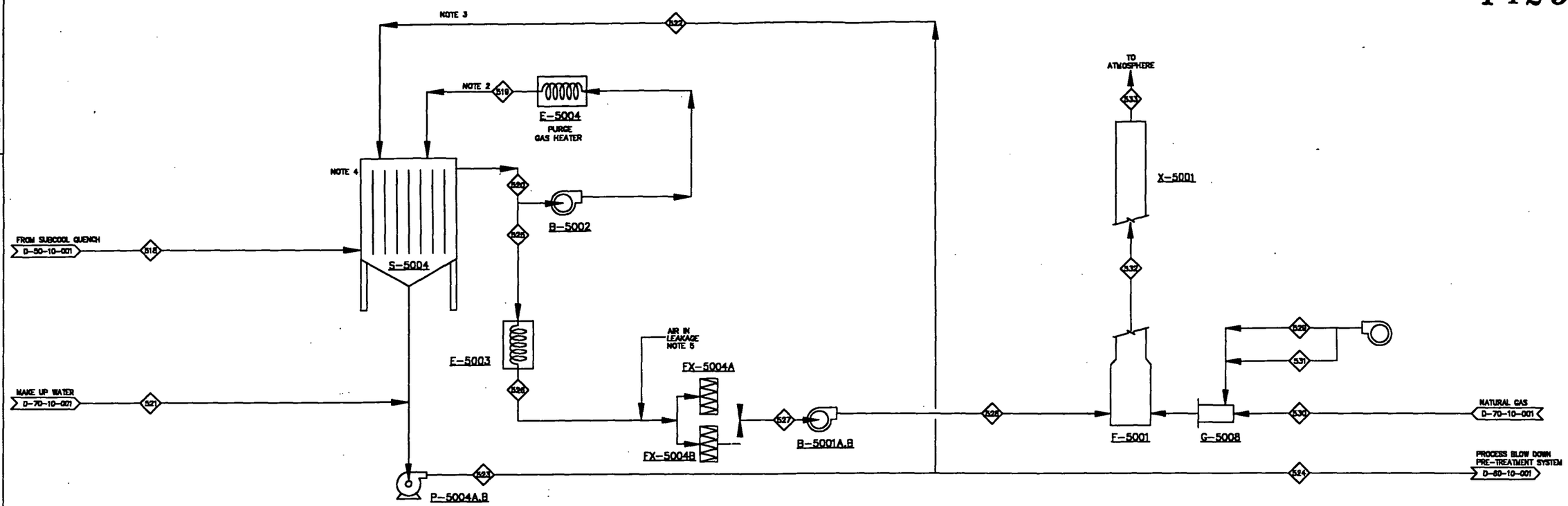


| | |
|---|---|
| S-5004 | WET ELECTROSTATIC PRECIPITATOR |
| E-5003 | OFF-GAS REHEATER |
| P-5004A,B | WESP RECYCLE PUMPS |
| FX-5004A,B | HEPA UNITS 1 & 2 |
| E-5004 | PURGE GAS HEATER |
| B-5002 | PURGE GAS BLOWER |
| B-5001A,B | INDUCED AIR FANS |
| B-5003 | COMBUSTION AIR BLOWER |
| G-5008 | THERMAL OXIDER BURNER |
| F-5001 | THERMAL OXIDER NOTE 7 |
| X-5001 | VENT STACK |

| STREAM NO. | 519 | 520 | 521 | 522 | 523 | 524 | 525 | 526 | 527 | 528 | 529 | 530 | 531 | 532 | 533 |
|---|---|---|---|---|---|---|---|---|---|---|---|---|---|---|---|
| COMPONENT | WESP INSULATOR PURGE GAS | WESP OUTLET GAS | WESP MAKEUP WATER | WESP WASH RECYCLE INLET | WESP WASH RECYCLE OUTLET | WESP BLOWDOWN | REHEATER INLET GAS | REHEATER OUTLET GAS | HEPA FILTER OUTLET GAS | ID FAN OUTLET GAS | T.O. VOLATILES COMBUSTION AIR | T.O. BURNER AUXILIARY FUEL | T.O. BURNER COMBUSTION AIR | T.O. EXHAUST GAS | STACK EXHAUST GAS |
| CARBON LB/HR | | | | | | | | | | | | 80 | | | |
| HYDROGEN LB/HR | | | | | | | | | | | | 26 | | | |
| CO2 LB/HR | | | | | | | | | | | | | | 384 | 384 |
| O2 LB/HR | 344 | 600 | | | | | 156 | 156 | 208 | 208 | 109 | | 604 | 329 | 329 |
| N2 LB/HR | 4,484 | 6,823 | | | | | 2,039 | 2,039 | 2,212 | 2,212 | 363 | 3 | 1,673 | 4,250 | 4,250 |
| H2O LB/HR | 221 | 321 | 1,000 | | | 1,000 | 100 | 100 | 100 | 100 | 4 | | 17 | 378 | 378 |
| SOL./PARTICULATE LB/HR | 0.0 | 0.024 | | | | 7.6 | 0.008 | 0.008 | 0.000004 | 0.000004 | | | | 0.008 | 0.008 |
| VOLATILE ORGANICS LB/HR | 49 | 71 | | | | | 22 | 22 | 22 | 22 | | | | 1.1 | 1.1 |
| TOTAL MASS FLOW LB/HR | 5,097 | 7,415 | 1,000 | INTERMITTENT | INTERMITTENT | 1,008 | 2,318 | 2,318 | 2,543 | 2,543 | 475 | 109 | 2,193 | 5,322 | 5,322 |
| VOLUMETRIC FLOW ACFM | 1,361 | 1,916 | | | | | 899 | 821 | 687 | 660 | 102 | | 470 | 4,807 | 4,795 |
| LIQUID FLOW GPM | | | 2 | | | 2 | | | | | | | | | |
| TEMPERATURE °F | 150 | 108 | 60 | | | 108 | 108 | 128 | 128 | 128 | 70 | 70 | 70 | 1,800 | 1,800 |
| PRESSURE IN. W.C. (PSI) | 0 | -10.5 | | | | | -10.5 | -11.5 | -15.5 | +2.0 | +28 | (15) | +28 | 1.0 | 1.0 |
| ENTHALPY MM BTU/HR | 0.4 | 0.4 | | | | 0.0 | 0.1 | 0.1 | 0.2 | 0.2 | 0.0 | 2.4 | 0.0 | 2.7 | 2.7 |

NOTES:
1. THE FLOWS ARE BASED ON NORMAL, AVERAGE AT 100% OPERATING FACTOR.
2. PURGE GAS TO WESP IS AT THE RATE OF 300 SCFM/INSULATOR (1200 SCFM TOTAL)
3. 150 GPM OF WASH WATER TO WESP AS REQUIRED.
4. 50,000 BTU/HR WESP SURFACE HEAT LOSS.
5. STREAM 527 INCLUDES AIR INLEAKAGE OF 50 SCFM.
6. SINGLE BLOWER OPERATION AT NORMAL FLOWS. BOTH BLOWERS OPERATIONAL FOR UPSET CONDITION
7. T.O. (THERMAL OXIDIZER).

**PRELIMINARY**
**NOT FOR CONSTRUCTION**

| REV | DATE | BY | CHK'D | APR'VD | DESCRIPTION |
|---|---|---|---|---|---|
| 0 | 4/29/96 | SLT | CDB | JH | CFC DRAFT |

FLUOR DANIEL FERNALD
WASTE PITS REMEDIAL ACTION PROJECT (WPRAP)
FERNALD, OHIO
FDF SUBCONTRACT NO. 86SC000001

PROJECT NAME: WASTE PITS REMEDIAL ACTION PROJECT (WPRAP)

TITLE: AREA 50 AIR POLLUTION CONTROL SYSTEM PROCESS FLOW DIAGRAM

INTERNATIONAL TECHNOLOGY CORPORATION
... Creating a Safer Tomorrow

13

| | | | | |
|---|---|---|---|---|
| DESIGNED BY | PA | CHECKED BY | CDB | REVISION |
| DRAWN BY | SLT | APPROVED BY | | D |
| DATE | 4/22/96 | DWG. SCALE | NONE | |
| IT PROJECT NO. | 773481 | DRAWING NO. | D-50-10-002 | |

G:\PROJECT\40000\50\1002-D

DRAWING NUMBER D-60-10-001

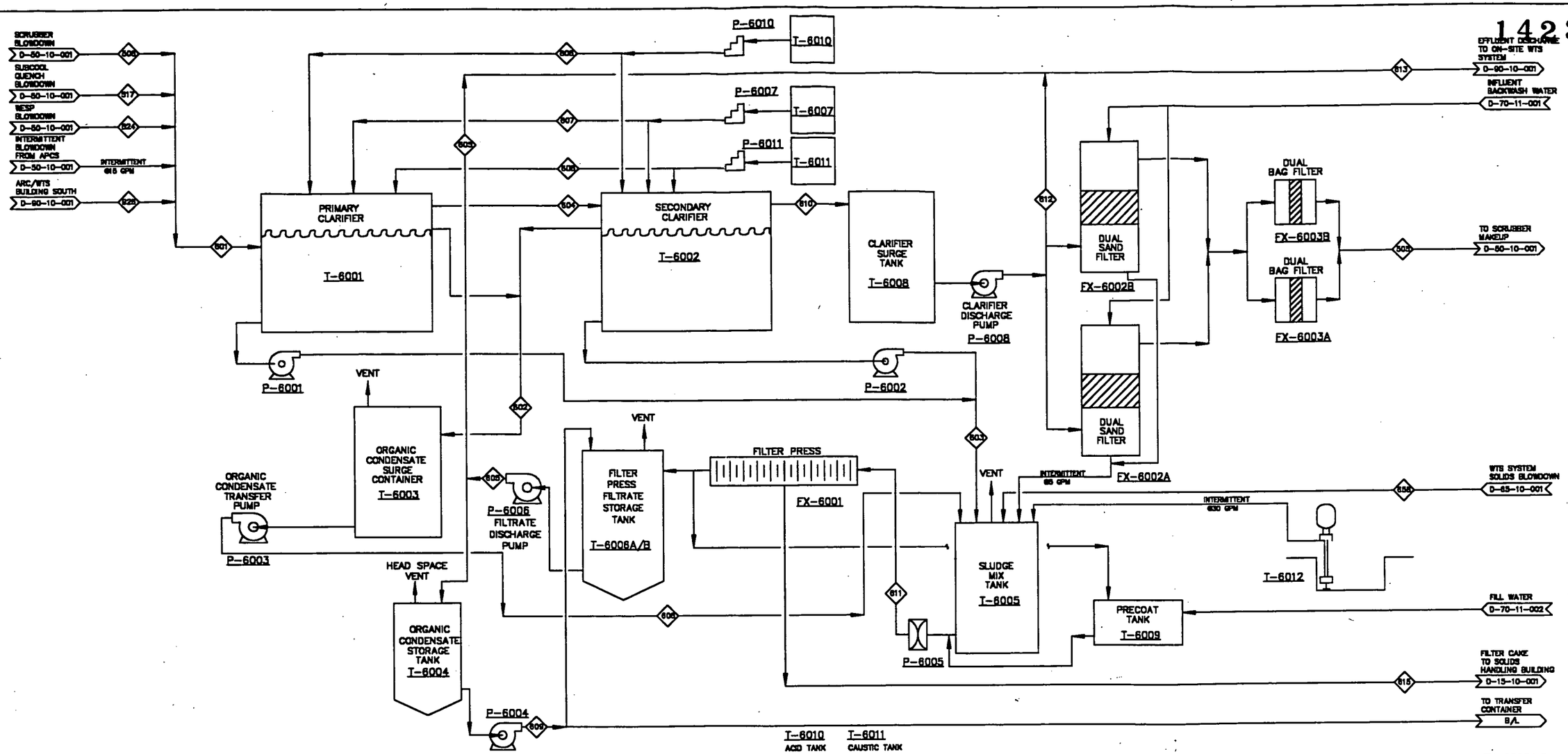


| | | | | | | | | | | | | | | | | | | | | | | |
|---|---|---|---|---|---|---|---|---|---|---|---|---|---|---|---|---|---|---|---|---|---|---|
| T-6001 PRIMARY CLARIFIER | P-6001 PRIMARY CLARIFIER SLUDGE PUMP | P-6003 ORGANIC CONDENSATE TRANSFER PUMP | T-6004 ORGANIC CONDENSATE STORAGE TANK 750 GAL. | P-6006 FILTRATE DISCHARGE PUMP | T-6003 ORGANIC CONDENSATE SURGE CONTAINER 300 GAL. | P-6004 ORGANIC CONDENSATE DISCHARGE PUMP | T-6006A/B FILTER PRESS FILTRATE STORAGE TANK, 12,500 GAL. | T-6007 POLYMER TANK | P-6007 POLYMER PUMP | T-6002 SECONDARY CLARIFIER | T-6010 ACID TANK | T-6011 CAUSTIC TANK | P-6010 ACID PUMP | P-6011 CAUSTIC PUMP | FX-6001 FILTER PRESS 100 FT | P-6002 SECONDARY CLARIFIER SLUDGE PUMP | P-6005 FILTER PRESS SLUDGE PUMP | T-6005 SLUDGE MIX TANK, 20,000 GAL. | T-6008 CLARIFIER SURGE TANK | T-6009 PRECOAT TANK 1200 GALLON | P-6008 CLARIFIER DISCHARGE PUMP | FX-6002A,B EFFLUENT DUAL SAND FILTERS | FX-6003A,B DUAL BAG FILTERS |

T-6012 PRESS AREA SUMP

| STREAM NO. / COMPONENT | 505 APC MAKE-UP WATER | 506 SCRUBBER BLOWDOWN | 517 SUB-COOL QUENCH BLOWDOWN | 524 WESP BLOWDOWN | 601 TOTAL BLOWDOWN FLOW TO CLARIFIER | 602 COMBINED CLARIFIER SKIMMER FLOW | 603 COMBINED CLARIFIER BLOWDOWN FLOWS | 604 PRIMARY CLARIFIER EFFLUENT | 605 FILTRATE TO ON-SITE WTS | 606 ORGANIC CONDENSATE TRANSFER | 607 LIQUID POLYMER | 608 ACID OR CAUSTIC FLOW | 609 ORGANIC STREAM FOR DISPOSAL | 610 SECONDARY CLARIFIER EFFLUENT | 611 SLUDGE TO FILTER PRESS | 612 EFFLUENT TO ON-SITE WTS | 613 EFFLUENT DISCHARGE TO WTS | 658 WTS BLOWDOWN | 615 FILTER CAKE | |
|---|---|---|---|---|---|---|---|---|---|---|---|---|---|---|---|---|---|---|---|---|
| TEMPERATURE, °F | 150 | 207 | 110 | 108 | 150 | 150 | 150 | 150 | 150 | 150 | 60 | 60 | 150 | 150 | 150 | 150 | 150 | 60 | 150 | |
| PRESSURE, PSIG | | | | | | | | | | | | | | | | | | | | |
| LIQUID FLOW, GPM | 50 | 53 | 30 | 2 | 85 | 5 | 15 | 75 | 23 | 5 | | 0 | – | 83 | 18 | 13 | 36 | 3 | | |
| WATER | 25,000 | 25,345 | 15,204 | 1,000 | 41,549 | 2500 | 7,500 | 36,543 | 11,500 | 2500 | 6 | | 15 | 31,555 | 9000 | 6,500 | 18,000 | 1,500 | 1,470 | |
| LIQUID POLYMER | | | | | | | | | | | 0.03 | | | | | | | | | |
| ACID/CAUSTIC SOLUTION | | | | | | | | | | | | 0 | | | | | | | | |
| SUSPENDED SOLIDS | 0 | 1,364 | 144 | 7.6 | 1,515.6 | 0 | 1470 | 781 | 0 | 0 | | | 0 | 45.6 | 1545 | 0 | 0 | 75 | 1,470 | |
| DISSOLVED SOLIDS | | | | | | | | | | | | | | | | | | | | |
| ORGANICS | 0 | 0 | 15 | 0 | 15 | 13.5 | 0.75 | 7.9 | 0 | 13.5 | | | 15 | 0.75 | 0.75 | 0 | 0 | | 0.75 | |
| TOTAL LB./HR | 25,000 | 26,709 | 15,362 | 1,008 | 43,080 | 2517 | 8,971 | 37,331 | 11,500 | 2517 | 6 | 0 | 30 | 31,601 | 10,546 | 6,500 | 18,000 | 1,575 | 2,941 | |

NOTES:

1. COMBINED CLARIFIER REMOVAL EFFICIENCY: SOLIDS 97%.
2. 90% ORGANICS IN THE CLARIFIER SKIM FLOW AND 5% ORGANICS IN THE CLARIFIER SOLIDS ASSUMED.
3. SOLIDS REMOVAL IN THE SAND FILTER ASSUMED TO BE 80%.
4. ORGANIC PUMP DISCHARGE FROM SCRUBBER IS NOT INCLUDED IN 506
5. ORGANIC PUMP DISCHARGE FROM SUBCOOL QUENCH IS NOT INCLUDED IN 517
6. THE PROCESS BLOWDOWN SYSTEM IS SIZED FOR 100 GPM.
7. DUAL SAND FILTER (FX-6002A/B) AND DUAL BAG FILTER (FX-6003A/B) ARE CONFIGURED AS INLINE SPARES.

**PRELIMINARY**
**NOT FOR CONSTRUCTION**

| REV | DATE | BY | CHK'D | APR'VD | DESCRIPTION |
|---|---|---|---|---|---|
| D | 4/29/96 | SLT | CDB | JN | CFC DRAFT |

FLUOR DANIEL FERNALD — WASTE PITS REMEDIAL ACTION PROJECT (WPRAP), FERNALD, OHIO, FDF SUBCONTRACT NO. 985C000001

PROJECT NAME: WASTE PITS REMEDIAL ACTION PROJECT (WPRAP)

TITLE: AREA 60 PROCESS BLOWDOWN PRE-TREATMENT SYSTEM PROCESS FLOW DIAGRAM

INTERNATIONAL TECHNOLOGY CORPORATION — ... Creating a Safer Tomorrow

14

| | | | | |
|---|---|---|---|---|
| DESIGNED BY | PA & GM | CHECKED BY | CDB | REVISION |
| DRAWN BY | SLT | APPROVED BY | | D |
| DATE | 4/22/96 | DWG. SCALE | NONE | |
| IT PROJECT NO. | 773481 | DRAWING NO. | D-60-10-001 | |

DRAWING NUMBER D-65-10-001

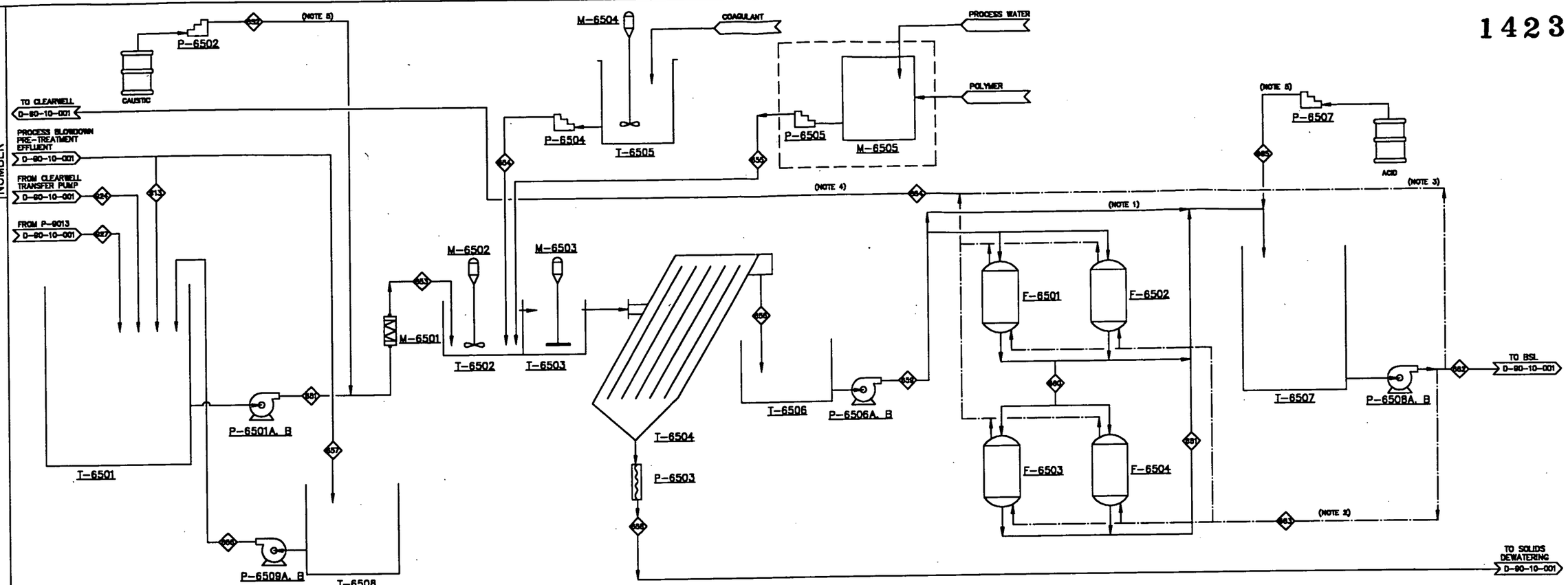


**T-6501** INFLUENT TANK

**P-6502** CAUSTIC METERING PUMP

**P-6501A, B** CLARIFIER FEED PUMPS

**M-6501** STATIC MIXER

**M-6502** FLASH MIXER

**T-6502** FLASH MIX TANK

**P-6509A, B** TEMPORARY HOLDING TANK TRANSFER PUMPS

**M-6503** FLOCCULATION MIXER

**T-6503** FLOCCULATION TANK

**T-6505** COAGULANT FEED TANK

**T-6504** INCLINED PLATE CLARIFIER

**P-6503** CLARIFIER SLUDGE PUMP

**M-6504** COAGULANT MIXER

**P-6504** COAGULANT METERING PUMP

**T-6508** TEMPORARY HOLDING TANK

**M-6505** POLYBLEND UNIT

**P-6505** POLYMER METERING PUMP

**T-6506** CLARIFIER OVERFLOW TANK

**P-6506A, B** FILTER FEED PUMPS

**F-6501, F-6502** SAND FILTERS

**F-6503, F6504** ION EXCHANGE UNITS

**T-6507** EFFLUENT TANK

**P-6508A, B** EFFLUENT PUMPS

**P-6507** ACID METERING PUMP

| STREAM NO. / COMPONENT | | 613 | 651 | 652 | 653 | 654 | 655 | 656 | 657 | 658 | 659 | 660 | 661 | 662 | 663 | 664 | 665 | 666 | 924 | 927 |
|---|---|---|---|---|---|---|---|---|---|---|---|---|---|---|---|---|---|---|---|---|
| | | PROCESS BLOWDOWN PRE-TREATMENT EFFLUENT | WTS INFLUENT | CAUSTIC FEED | CLARIFIER INFLUENT | COAGULANT FEED | POLYMER FEED | CLARIFIER OVERFLOW | EMERGENCY OVERFLOW | WTS SLUDGE DISCHARGE | SAND FILTER FEED | ION EXCHANGE FEED | ION EXCHANGE EFFLUENT | WTS EFFLUENT | BACKWASH FEED | WTS BACKWASH | ACID FEED | TEMPORARY HOLDING TANK EFFLUENT | CLEARWELL TRANSFER PUMP | APC/WTS SUMP NORTH |
| TOTAL SUSPENDED SOLIDS | mg/L | 0 | 2,401 | 0 | 2,401 | 0 | 0 | 13 | 0 | 35,000 | 13 | 0 | 0 | 0 | 0 | 192 | 0 | 0 | 3,000 | 0 |
| | | | | | | | | | | | | | | | | | | | | |
| WATER | LB/HR | 16,434 | 83,132 | 0 | 83,132 | 104 | 10 | 77,556 | 0 | 5,688 | 77,556 | 77,556 | 77,556 | 72,345 | 5,213 | 5,213 | 0 | 0 | 66,698 | 0 |
| SOLID/PARTICULATE | LB/HR | | 200 | 0 | 200 | 0 | 0 | 1 | 0 | 199 | 1 | 0 | 0 | 0 | 0 | 1 | 0 | 0 | 200 | 0 |
| TOTAL MASS FLOW | LB/HR | 16,434 | 83,332 | 0 | 83,332 | 104 | 10 | 77,559 | 0 | 5,888 | 77,559 | 77,556 | 77,556 | 72,345 | 5,213 | 5,214 | 0 | 0 | 66,898 | 0 |
| | | | | | | | | | | | | | | | | | | | | |
| VOLUMETRIC FLOW | GPM | 33 | 240 | 0 | 240 | 0.3 | 0.03 | 240 | 0 | 200 | 250 | 250 | 250 | 250 | 500 | 500 | 0 | 0 | 200 | 0 |
| AVERAGE VOLUMETRIC FLOW | GPD | 47,520 | 239,434 | 0 | 238,434 | 299 | 30 | 223,162 | 0 | 16,368 | 223,162 | 223,162 | 223,162 | 208,162 | 15,000 | 15,000 | 0 | 0 | 191,914 | 0 |
| TEMPERATURE | °F | 140 | AMB | AMB | AMB | AMB | AMB | AMB | AMB | AMB | AMB | AMB | AMB | AMB | AMB | AMB | AMB | AMB | AMB | AMB |

LEGEND

1. WATER CAN BYPASS SAND FILTER AND ION EXCHANGE UNIT OR ONLY THE ION EXCHANGE DEPENDING ON WATER QUALITY.
2. TREATED EFFLUENT CAN BE USED AS BACKWASH WATER.
3. TREATED WATER CAN BE RECYCLED TO THE CLEARWELL IF IT DOES NOT MEET THE WAC FOR DISCHARGE TO THE BSL.
4. PRIMARILY BACKWASH WATER. RECYCLED EFFLUENT WATER ONLY AS NECESSARY.
5. USED FOR pH CONTROL AS NEEDED.

**PRELIMINARY**
**NOT FOR CONSTRUCTION**

| REV | DATE | BY | CHK'D | APR'VD | DESCRIPTION |
|---|---|---|---|---|---|
| D | 4/28/98 | RW | | | DRAFT CFC |
| C | 3/27/98 | RJC | | | DRAFT ISSUE FOR DFD REVIEW |
| B | 2/13/98 | RJC | | | DRAFT ISSUE FOR EPA REVIEW |
| A | 1/7/98 | RW | PMS | | ISSUED FOR FACILITIES ENG. PKG. |

FLUOR DANIEL FERNALD

WASTE PITS REMEDIAL ACTION PROJECT (WPRAP)
FERNALD, OHIO
FDF SUBCONTRACT NO. 68SC000001

PROJECT NAME: WASTE PITS REMEDIAL ACTION PROJECT (WPRAP)

TITLE: AREA 65 WASTEWATER TREATMENT SYSTEM (WTS) PROCESS FLOW DIAGRAM

INTERNATIONAL TECHNOLOGY CORPORATION 15

... *Creating a Safer Tomorrow*

| | | | | |
|---|---|---|---|---|
| DESIGNED BY | PMS | CHECKED BY | | REVISION |
| DRAWN BY | GSJ | APPROVED BY | | D |
| DATE | 11/24/97 | DWG. SCALE | NONE | |
| IT PROJECT NO. | 773481 | DRAWING NO. | D-65-10-001 | |

(773481-E3) G:\PROJECT\40000\65\1001D

DRAWING NUMBER D-70-10-001

1423

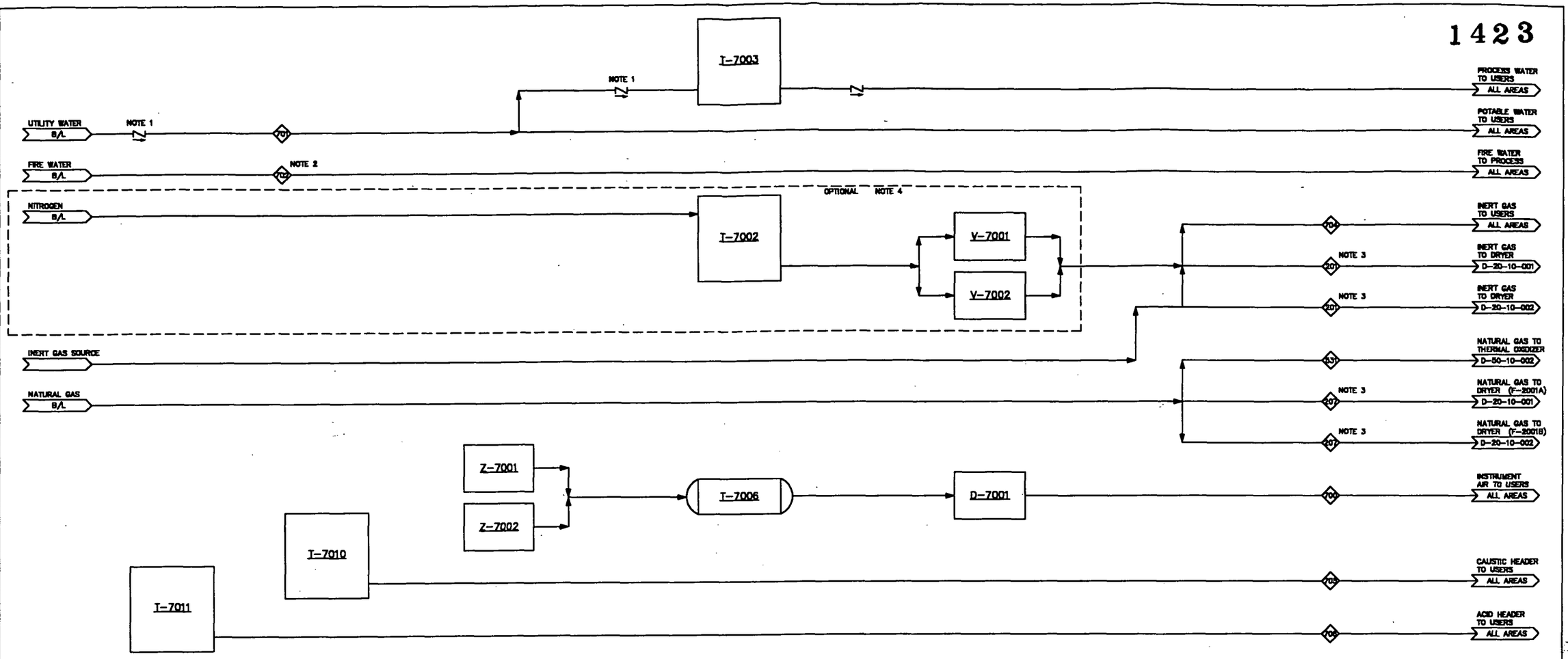


| | |
|---|---|
| T-7003 | PROCESS WATER STORAGE TANK |
| T-7002 | NITROGEN STORAGE TANK |
| V-7001 | LIQUID NITROGEN VAPORIZER |
| V-7002 | LIQUID NITROGEN VAPORIZER |
| T-7011 | ACID TANK |
| T-7010 | CAUSTIC TANK |
| Z-7001 | AIR COMPRESSOR SYSTEM |
| Z-7002 | AIR COMPRESSOR SYSTEM |
| T-7006 | INSTRUMENT AIR RECEIVER |
| D-7001 | INSTRUMENT AIR DRYER |

| STREAM NO. / COMPONENT | | 201 NITROGEN | 207 NATURAL GAS | 531 NAT'L GAS TO THER. OXIDIZER | 700 COMPRESSED AIR | 701 WATER | 702 FIRE WATER | 704 NITROGEN | 705 CAUSTIC | 706 ACID | ◇ | ◇ | ◇ | ◇ | ◇ | ◇ | ◇ | ◇ | ◇ | ◇ | ◇ | ◇ | ◇ | ◇ |
|---|---|---|---|---|---|---|---|---|---|---|---|---|---|---|---|---|---|---|---|---|---|---|---|---|
| AVERAGE | | | | | | | | | | | | | | | | | | | | | | | | |
| CAUSTIC | LB/HR | | | | | | | | 1,000 | | | | | | | | | | | | | | | |
| ACID | LB/HR | | | | | | | | | 1,000 | | | | | | | | | | | | | | |
| $H_2O$ | LB/HR | | | | | 45,036 | 200,000 | | | | | | | | | | | | | | | | | |
| AIR | LB/HR | | | | 1,890 | | | | | | | | | | | | | | | | | | | |
| NITROGEN | LB/HR | 760 | | | | | | 150 | | | | | | | | | | | | | | | | |
| NATURAL GAS | LB/HR | | 1,026 | 109 | | | | | | | | | | | | | | | | | | | | |
| TOTAL MASS FLOW | LB/HR | 760 | 1,026 | 109 | 1,890 | 45,036 | 200,000 | 150 | 1,000 | 1,000 | | | | | | | | | | | | | | |
| VOLUMETRIC FLOW | SCFM (GPM) | 175 | 404 | 43 | 320 | (90) | (400) | 35 | (2) | (2) | | | | | | | | | | | | | | |
| TEMPERATURE | °F | 70 | 70 | 70 | 70 | 70 | 70 | 70 | 70 | 70 | | | | | | | | | | | | | | |
| PRESSURE | IN. W.C. (PSI) | (40) | (47) | (47) | (125) | (45) | (50) | (40) | (40) | (40) | | | | | | | | | | | | | | |
| MAXIMUM | | | | | | | | | | | | | | | | | | | | | | | | |
| $H_2O$ | LB/HR | | | | | 45,036 | 200,000 | | | | | | | | | | | | | | | | | |
| AIR | LB/HR | | | | 1,900 | | | | | | | | | | | | | | | | | | | |
| NITROGEN | LB/HR | 1,000 | | | | | | 1,500 | | | | | | | | | | | | | | | | |
| NATURAL GAS | LB/HR | | 1,300 | 1,090 | | | | | | | | | | | | | | | | | | | | |

NOTES:

1. BACKFLOW PREVENTER
2. EMERGENCY FLOW ONLY.
3. AMOUNTS REQUIRED FOR EACH DRYER.
4. NITROGEN MAY BE USED AS AN ALTERNATE TO OTHER INERT GAS SOURCE.

| REV | DATE | BY | CHK'D | APR'VD | DESCRIPTION |
|---|---|---|---|---|---|
| D | 4/28/98 | JWH | BAH | CP | CFC DRAFT |
| B | 1/23/98 | JWH | TGB | CP | ISSUED FOR DESIGN |
| A | 12/31/97 | JWH | TGB | CP | ISSUED FOR DRAFT PLANT FACILITIES ENG. PKG. |

FLUOR DANIEL FERNALD

WASTE PITS REMEDIAL ACTION PROJECT (WPRAP)
FERNALD, OHIO
FDF SUBCONTRACT NO. 98SC000001

PROJECT NAME
WASTE PITS REMEDIAL ACTION PROJECT (WPRAP)

TITLE
AREA 70
PROCESS FLOW DIAGRAM
UTILITIES

INTERNATIONAL TECHNOLOGY CORPORATION

... Creating a Safer Tomorrow

16

| | | | | | |
|---|---|---|---|---|---|
| DESIGNED BY | TGB | CHECKED BY | TGB | | REVISION |
| DRAWN BY | JWH | APPROVED BY | CP | | D |
| DATE | 12/31/97 | DWG. SCALE | NONE | | |
| IT PROJECT NO. | 773481 | DRAWING NO. | D-70-10-001 | | |

G:\PROJECT\40000\70\1001-D

DRAWING NUMBER D-90-10-001

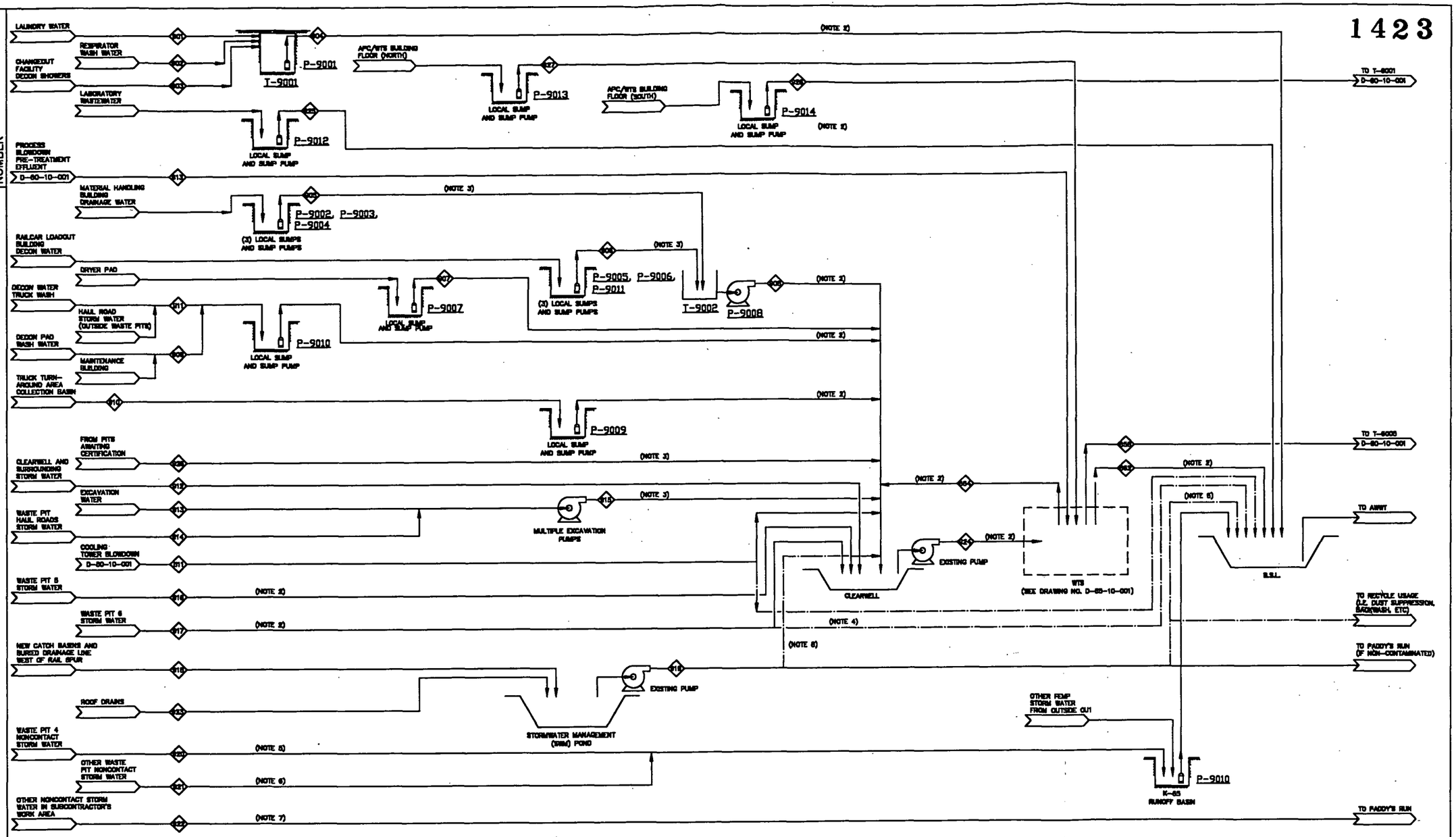


| | |
|---|---|
| P-9001 | GRAY WATER PUMP |
| T-9001 | GRAY WATER COLLECTION TANK (GWCT) |
| P-9002, 9003, 9004 | MATERIAL HANDLING BUILDING (MHB) SUMP PUMPS |
| P-9005, 9006 | RAILCAR LOADOUT BUILDING (RLB) SUMP PUMPS (NORTH AND SOUTH) |
| P-9011 | RAILCAR LOADOUT BUILDING (RLB) DECON SUMP PUMP |
| P-9012 | LABORATORY SUMP PUMP |
| P-9007 | DRYER PAD SUMP PUMP |
| T-9002 | MHB COLLECTION TANK (MHBCT) |
| P-9008 | MHBCT TRANSFER PUMP |
| P-9009 | TRUCK TURN-AROUND AREA (TTAA) SUMP PUMP |
| P-9010 | TRUCK WASH SUMP PUMP |
| P-9013 | APC/WTS BUILDING SUMP PUMP (NORTH) |
| P-9014 | APC/WTS BUILDING SUMP PUMP (SOUTH) |

| STREAM NUMBER (NOTE 1) | 811 COOLING TOWER | 813 PROCESS BLOWDOWN PRE-TREATMENT EFFLUENT | 901 LAUNDRY WATER | 902 RESPIRATOR WASH WATER | 903 DECON SHOWERS | 904 GWCT TRANSFER PUMP | 905 MATERIAL HANDLING BLDG SUMPS | 906 RAILCARD LOADOUT BLDG SUMPS | 907 DRYER PAD SUMP | 908 MHBCT TRANSFER PUMP | 909 DECON PAD WATER | 910 TRUCK TURN-AROUND AREA STORM WATER | 911 TRUCK WASH SUMP | 912 CLEARWELL STORM WATER | 913 EXCAVATION WATER | 914 HAUL ROAD STORM WATER | 915 EXCAVATION PUMPS | 916 WASTE PIT 5 STORM WATER | 917 WASTE PIT 6 STORM WATER | 918 SWM POND COLLECTION BASINS | 919 SWM POND EFFLUENT | 920 WASTE PIT 4 NONCONTACT STORM WATER | 921 OTHER WASTE PIT NONCONTACT STORM WATER | 922 NONCONTACT STORM WATER OUTSIDE PITS | 923 ROOF DRAINS | 924 CLEARWELL TRANSFER PUMP | 925 LABORATORY WASTEWATER | 926 FROM PITS AWAITING CERTIFICATION | 927 APC/WTS BUILDING (NORTH) | 928 APC/WTS BUILDING (SOUTH) | 858 WATER IN WTS SLUDGE DISCHARGE | 862 WTS EFFLUENT | 864 WTS BACKWASH |
|---|---|---|---|---|---|---|---|---|---|---|---|---|---|---|---|---|---|---|---|---|---|---|---|---|---|---|---|---|---|---|---|---|---|
| | | | | | | | | | | | | | | | | | | | | | | | | | | | | | | | | | |

NOTES:

1. STREAM DESCRIPTIONS ARE GIVEN IN TABLE 1, BY PHASE.
2. BURIED LINE.
3. SHOWN AS A SINGLE STREAM FOR CALCULATION PURPOSES. ACTUAL FIELD CONDITIONS MAY REQUIRE SEVERAL SEPARATE STREAMS.
4. STREAM CAN GO TO THE BSL IF IT MEETS THE WAC FOR DISCHARGE TO THE BSL.
5. COLLECTION TRENCH AROUND PIT AND THROUGH EXISTING CULVERTS.
6. EXISTING TRENCHES AND CULVERTS.
7. DRAINAGE SWALES AROUND NORTH AND SOUTH SIDE OF BSL; AND AREA NORTH OF PIT 6 AND SWM POND.
8. STREAM CAN GO TO BSL OR CLEARWELL IF IT DOES NOT MEET CRITERIA FOR NPDES DISCHARGE.

**PRELIMINARY**
**NOT FOR CONSTRUCTION**

| REV | DATE | BY | CHK'D | APR'VD | DESCRIPTION |
|---|---|---|---|---|---|
| D | 1/28/98 | RW | | | DRAFT CFC |
| C | 1/27/98 | RW | PMS | | DRAFT ISSUE FOR FDF REVIEW |
| B | 2/13/98 | RC | PMS | | DRAFT ISSUE FOR EPA REVIEW |
| A | 1/6/98 | RW | PMS | | ISSUED FOR DRAFT FACILITIES ENGINEERING PACKAGE |

FLUOR DANIEL FERNALD
WASTE PITS REMEDIAL ACTION PROJECT (WPRAP)
FERNALD, OHIO
FDF SUBCONTRACT NO. 983C000001

PROJECT NAME: WASTE PITS REMEDIAL ACTION PROJECT (WPRAP)

TITLE: 90 AREA SITE WATER BALANCE PROCESS FLOW DIAGRAM

INTERNATIONAL TECHNOLOGY CORPORATION
... Creating a Safer Tomorrow

17

| | | | | |
|---|---|---|---|---|
| DESIGNED BY | P. STEARNS | CHECKED BY | | REVISION |
| DRAWN BY | RJC | APPROVED BY | | D |
| DATE | 17 DECEMBER 97 | DWG. SCALE | NO SCALE | |
| IT PROJECT NO. | 773481 | DRAWING NO. | D-90-10-001 | |

(773481-E4) G:\PROJECT\40000\90\1001-0